DATE ISSUED DEC 1 1975

ORNL-5090

ORNL
MASTER COPY

Head-End Reprocessing Studies With Irradiated HTGR-Type Fuels: III. Studies With RTE-7: TRISO UC_2-TRISO ThC_2

C. L. Fitzgerald
V. C. A. Vaughen
K. J. Notz
R. S. Lowrie

OAK RIDGE NATIONAL LABORATORY
OPERATED BY UNION CARBIDE CORPORATION • FOR THE U.S. ATOMIC ENERGY COMMISSION

Printed in the United States of America. Available from
National Technical Information Service
U.S. Department of Commerce
5285 Port Royal Road, Springfield, Virginia 22161
Price: Printed Copy $5.45; Microfiche $2.25

This report was prepared as an account of work sponsored by the United States Government. Neither the United States nor the Energy Research and Development Administration, nor any of their employees, nor any of their contractors, subcontractors, or their employees, makes any warranty, express or implied, or assumes any legal liability or responsibility for the accuracy, completeness or usefulness of any information, apparatus, product or process disclosed, or represents that its use would not infringe privately owned rights.

ORNL-5090
UC-77 — Gas-Cooled Reactor Technology

Contract No. W-7405-eng-26

CHEMICAL TECHNOLOGY DIVISION

HEAD-END REPROCESSING STUDIES WITH IRRADIATED HTGR-TYPE FUELS:

III. STUDIES WITH RTE-7: TRISO UC_2-TRISO ThC_2

C. L. Fitzgerald
V. C. A. Vaughen
K. J. Notz
R. S. Lowrie

NOVEMBER 1975

OAK RIDGE NATIONAL LABORATORY
Oak Ridge, Tennessee 37830
operated by
UNION CARBIDE CORPORATION
for the
ENERGY RESEARCH AND DEVELOPMENT ADMINISTRATION

CONTENTS

PAGE

ABSTRACT 1

1.0 INTRODUCTION 1

2.0 DESCRIPTION OF FUEL AND IRRADIATION HISTORY 4

3.0 STUDIES OF FUEL STICK 7-3-8-4 6

3.1 General Procedure 6
3.2 Analysis of the Initial Burn 9
3.3 Processing of the Sieved Burner Products (RTE-7-3-8-4) 9
3.3.1 Fines Fraction (-80 Mesh) 9
3.3.2 Fissile Fraction (80 Mesh < Fissile < 42 Mesh). 10
3.3.3 Fertile Fraction (+42 Mesh) 10
3.4 Heavy Metals Distribution and Recovery (RTE-7-3-8-4) . 11
3.4.1 Isotopic Uranium Results for RTE-7-3-8-4 with Burnup Analysis 11
3.4.2 Breakage and Crossover Estimates (RTE-7-3-8-4). 15
3.5 Fission Product Distribution and Recovery (RTE-7-3-8-4) 16
3.5.1 Total Amounts Found and Overall Distribution of the Fission Products 16
3.5.2 ^{3}H and ^{85}Kr Releases to the Off-Gas (RTE-7-3-8-4) 18
3.5.3 Release of Other Fission Products to the Off-Gas 18
3.5.4 Distribution of Fission Products in Leaches and Leached Residues 23

4.0 SECOND EXPERIMENT - FUEL STICK 7-3-7-2 23

4.1 Procedure Summary for Fuel Stick 7-3-7-2 25
4.2 Analysis of the Initial Burn of Fuel Stick 7-3-7-2 . . 25
4.3 Processing of the Sieved Burner Products 28
4.3.1 The Fertile Fraction (> 45 Mesh) 28
4.3.2 The Fissile Fraction (80 Mesh < Fissile < 45 Mesh) 29
4.3.3 The Fines Fraction (< 80 Mesh) 29
4.4 Heavy Metals Distribution and Recovery 29
4.4.1 Isotopic Uranium Analyses with Material Balances 31
4.4.2 Burnup Estimates for Fuel Stick 7-3-7-2 32
4.4.3 Crossover and Breakage Estimates 33
4.5 Fission Product Distribution and Recovery 34
4.5.1 Total Amounts Found and the Overall Distribution of Fission Products. 34
4.5.2 Krypton and ^{3}H Releases to the Off-Gas 34

4.5.3 Release of Other Fission Products to the Off-Gas 39
4.5.4 Distribution of Fission Products in Leaches and Leach Residues 39

5.0 COMPARISONS OF RECOVERED QUANTITIES OF MATERIALS WITH PREDICTIONS 41

5.1 Fuel Stick Parameters 41
5.2 Comparison of Quantities of Radioisotopes Found with Predicted Amounts 41

6.0 REFERENCES 47

APPENDIX. SUPPLEMENTARY INFORMATION ON RTE-7 48

LIST OF FIGURES

PAGE

1. Miniburner-Filter Assembly 3
2. Off-gas Train Used for RTE-7-3-8-4 (TRISO UC_2-TRISO ThC_2) . 5
3. Flowsheet Used for Fuel Stick RTE-7-3-8-4 (TRISO UC_2-TRISO ThC_2). 7
4. Off-Gas Train Used for RTE-7-3-7-2 Burning (TRISO UC_2-TRISO ThC_2). 26
5. Flowsheet Used for RTE-7-3-7-2 (TRISO UC_2-TRISO ThC_2) . . . 27

A-1. Isometric Drawing of Sectioned Recycle Test Element (RTE). . 49

A-2. Primary Burn RTE-7-3-7-2 50

A-3. Secondary Burn, Ground Fissile Particles, RTE-7-3-7-2 51

A-4. Secondary Burn, Ground Fertile Particles, RTE-7-3-7-2 . . . 52

LIST OF TABLES

PAGE

1. Uranium-thorium distributions for RTE-7-3-8-4 head-end reprocessing tests 12

2. Uranium isotopic distribution for RTE-7-3-8-4 13

3. Crossover results for RTE-7-3-8-4 16

4. Fission product recoveries and main stream distributions, RTE-7-3-8-4. 17

5. Fission gas release for RTE-7-3-8-4 19

6. Distribution of fission products in the off-gas trains from RTE-7-3-8-4 21

7. Concentration and distribution of fission products in off-gas train from RTE-7-3-8-4 22

8. Fission product distribution in the leached burner products, RTE-7-3-8-4. 24

9. Uranium-thorium distributions for RTE-7-3-7-2 30

10. Isotopic uranium concentrations from RTE-7-3-7-2 found after irradiation. 32

11. Crossover and breakage results for fuel stick 7-3-7-2 . . 33

12. Fission product recoveries and main stream distribution for RTE-7-3-7-2 35

13. Fission gas release in burner off-gas during processing of RTE-7-3-7-2 36

14. ^{85}Kr distribution as inferred from multichannel analyzer gross counts (measured in peak Kr-85 channel with background correction 38

15. Plateout and trapping of fission products in downstream off-gas equipment for RTE-7-3-7-2 40

16. Fission product distribution in the leached burner products for RTE-7-3-7-2 42

PAGE

17. Comparison of found and predicted coated particle parameters for one fuel stick (RTE-7-3, type i fuel, TRISO UC_2-TRISO ThC_2) 43

18. Comparison of amounts of heavy metals predicted at end of life with amounts found 44

19. Comparison of recovered amounts of selected fission products with predictions 45

A-1. Coated particle parameters (average values), GAC data . . 48

HEAD-END REPROCESSING STUDIES WITH IRRADIATED HTGR-TYPE FUELS: III. STUDIES WITH RTE-7: TRISO UC_2-TRISO ThC_2

C. L. Fitzgerald
V. C. A. Vaughen
K. J. Notz
R. S. Lowrie

ABSTRACT

Head-end reprocessing studies on irradiated Fort St. Vrain type HTGR fuel (TRISO coated UC_2-TRISO coated ThC_2) have been performed. Fuel sticks were burned quiescently in oxygen at 750°C, the ash was screened to separate the fissile SiC-coated particles from the fertile SiC-coated particles, each particle fraction was crushed and burned separately in oxygen, and the secondary burner ash products were leached.

These studies concentrated on the release of radionuclides to the burner off-gases after passing through a 20-μm sintered metal frit held at 500°C. Fission product and heavy metal inventories were made on the process gaseous, liquid, and solid streams. Experimental results are compared with pre-irradiation average fuel stick compositions and with calculated fission product inventories.

1.0 INTRODUCTION

Hot cell tests with small irradiated fuel samples play an important part in developing methods for reprocessing spent reactor fuels. Data from these tests can be used to:

1. determine if irradiation alters the behavior of the fuel during the various reprocessing steps and
2. determine the behavior of the radionuclides present during each process step.

Early work[1,2] in the hot cell confirmed the feasibility of the crush-burn-grind-leach flowsheet and indicated that particle breakage would not be excessive. In addition, these studies showed that irradiated material behaved similarly to the unirradiated test specimens, and that the release of radionuclides into streams to be ultimately released to the environment needed to be limited.

Reactors and reprocessing plants need to closely control the release of radionuclides. Not only is it necessary to reduce the gross amounts of activity released, it is also necessary to recover the gaseous fission products (^{85}Kr, $^{3}H_2$, etc.), prevent the release of the volatile species (I_2, Ru, Cs, etc.), and to make sure that even trace amounts of the actinides are recovered. Thus, the emphasis in the hot cell studies is shifting from determining the physical behavior of the irradiated fuel in head-end reprocessing steps to determining such things as to which process streams and in what quantities do the radionuclides report.

The experiment was specifically formulated to get detailed answers to the following questions for Fort St. Vrain fuel (TRISO-TRISO) to obtain data that would be applicable to the design of a commercial plant.

1. What fraction (and concentration) of each detectable nuclide will report to the off-gas stream through a high-temperature sintered metal filter during burning?

To answer this, and to remove the possibility of contamination of the off-gas by dusts from the burner, a specially designed heated "top hat"* was added to the burner (Fig. 1). It contained two 20-μm filters in series and was operated at 500°C.

2. What fraction of each detectable fission product will plate out from the off-gas on the filter elements and lines?

Each filter could be removed easily with only a low probability that the disk would be touched (and thereby cross-contaminated). The lines were sectioned and leached.

3. Will dry filtration of the off-gas be adequate for particulate retention in a large reprocessing plant?

This is a difficult question because the usual method of analysis of a gas stream is to measure what is trapped out on filters. In this case, we want to know what is <u>not</u> trapped out on the filters (i.e., what gets through the filters). We concluded that we would have to use two approaches. First, we would try to sort the particles out by size, determine their composition, and extrapolate to zero diameter to establish if any isotopes were being selectively released (or was the retention process simply a matter of trapping ever finer particles of a

---

*Term used in this report to designate the upper flange extension.

ORNL DWG 72-5293R3

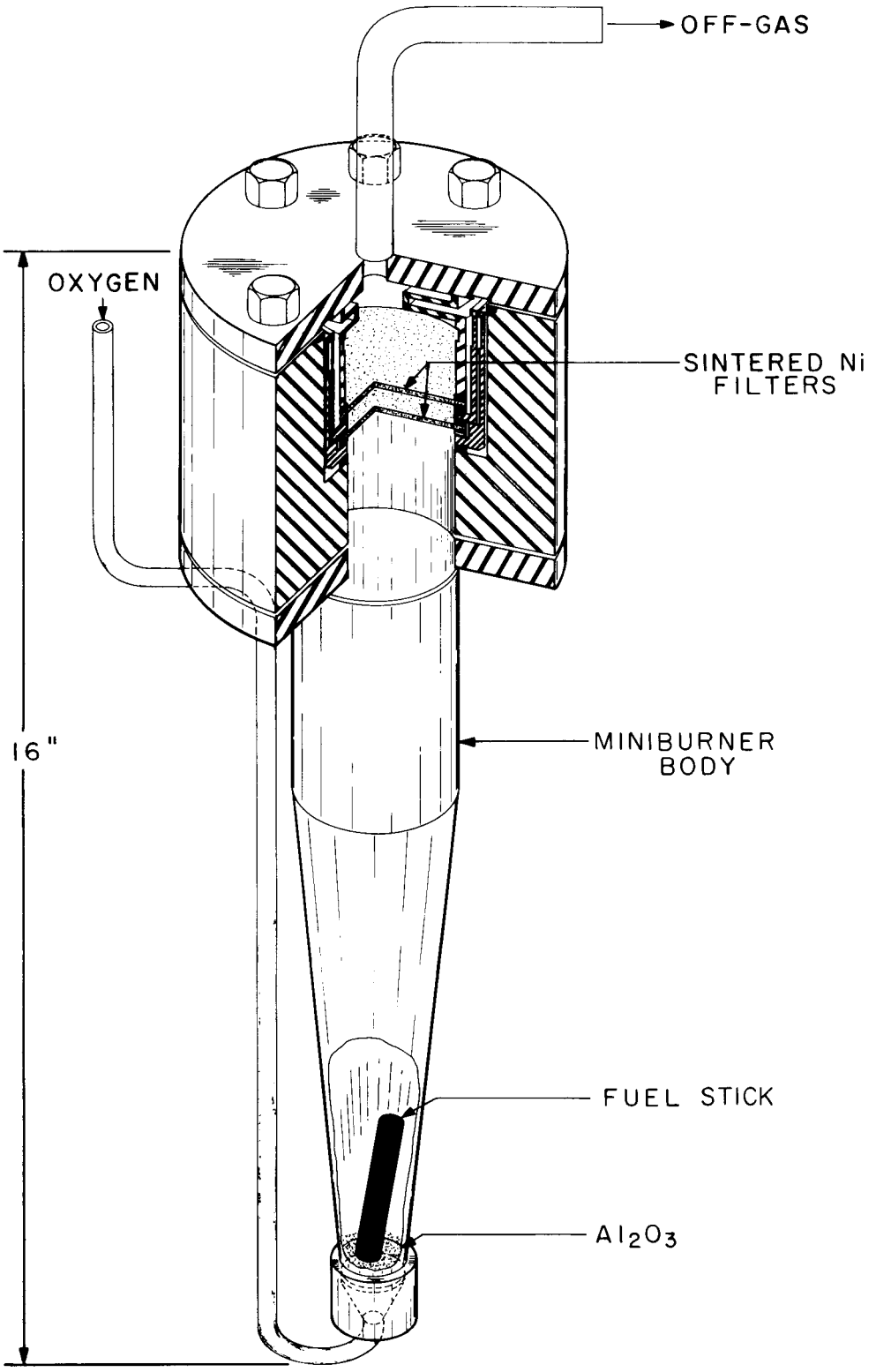

Fig. 1. Miniburner-filter assembly.

uniform composition). Second, we would pass the gases through a qualitatively different trapping method to try to catch that which was not trapped by the filters. We chose to use boiling hydrochloric acid to condense around, trap and dissolve ultra-fine particles, followed by a room-temperature caustic bubbler to remove the acid vapors and, hopefully, catch any volatiles not soluble in acid (Fig. 2).

In the second experiment with this TRISO-TRISO fuel, we used 0.2-μm-pore silver metal filters for trapping small size particles and omitted the liquid traps.

4. As far as possible, the normal head-end test results were also sought (i.e., material balances, particle breakage, crossover, U isotopic composition, release of ^{3}H and ^{85}Kr, dissolution in Thorex reagent, and residue analysis).

The hot cell was cleaned out and refitted between the two runs reported here. We feel the second set of data is more likely correct where any disagreement is found as to the amounts of gamma-emitting nuclides at low levels. Some of these results have been reported.[9]

2.0 DESCRIPTION OF FUEL AND IRRADIATION HISTORY

Early hot cell tests were hampered by the lack of fuel test specimens containing fuel particles which were typical of candidate 1100-MWe power reactor fuels. Consequently, a series of irradiation experiments, Recycle Test Elements (RTE), was conducted[3,4] to provide fairly large amounts of the candidate fuels for evaluation and hot cell tests. This report describes two experiments with test specimens of the Fort St. Vrain type (TRISO UC_2-TRISO ThC_2) from Recycle Test Element 7. These experiments were somewhat different and will be described independently. Results and procedures will be compared where applicable.

The RTE-7 is the first released of seven Recycle Test Elements irradiated in the Peach Bottom Reactor under HTGR conditions. The RTE assembly is shown in the Appendix. The irradiation began on July 14, 1970 and was removed from the reactor in April 1971 after 252 effective full power days of exposure. The average element burnup was predicted by GAC to be 2.38% FIMA. A peak fast neutron flux of about 1×10^{21} neutrons/cm^2 was accumulated.

ORNL DWG 72-5306R1

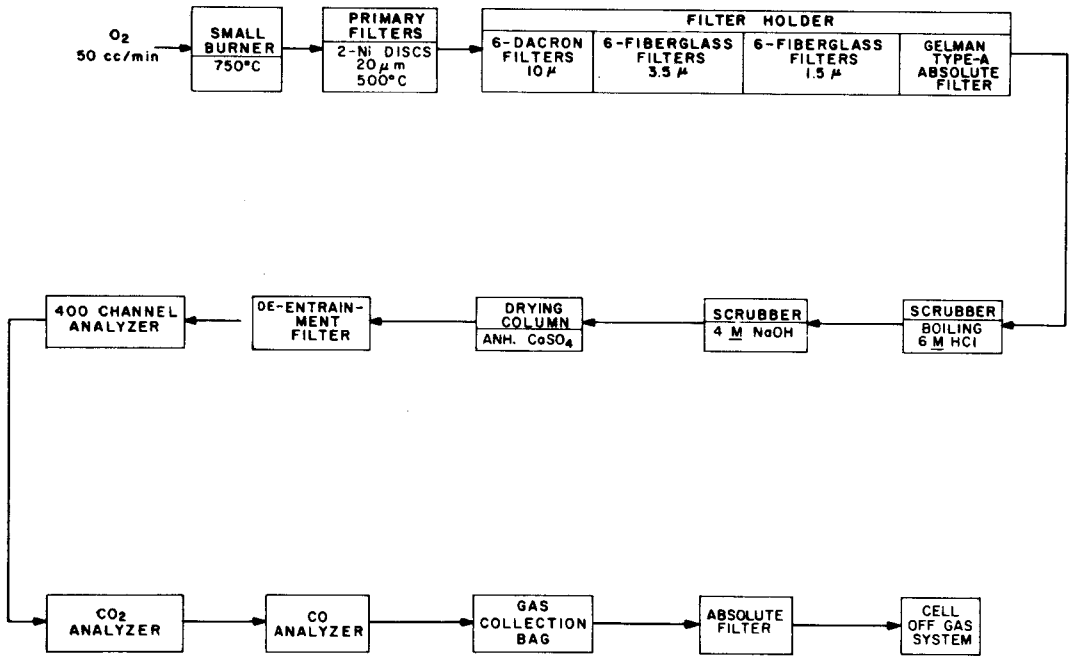

Fig. 2. Off-gas train used for RTE-7-3-8-4 (TRISO UC_2-TRISO ThC_2).

The samples selected for study were in fuel body number 3, the fourth fuel stick in hole number 8 (7-3-8-4) and the second stick in hole number 7 (7-3-7-2), and had cooling times of one and two years, respectively. These fuel sticks operated near the peak flux region at about 1200-1250°C and had the following irradiation data:[8]

Fuel stick number	Fast fluence x 10^{21} E > 0.18 MeV	Thermal fluence x 10^{21} E < 2.38 eV	FIMA (%)		
			Fissile	Fertile	Total
7-3-7-2	1.603	1.224	20.17	0.23	4.47
7-3-8-4	1.609	1.219	20.17	0.23	4.48

The properties of the coated particles contained in these specimens are shown in Table A-1 in the Appendix. Metallographic and post-irradiation examinations of the particular combinations are discussed elsewhere.[3,4] The fertile particles were TRISO coated ThC_2, and the fissile particles were TRISO coated UC_2. The reported stick loading gives a Th/U ratio of 3.64. However, by using the average values of the coated particle parameters (Tables A-1 and A-2) and the reported weights of coated particles contained per rod, we calculate a Th/U ratio of 4.42. The reported and calculated thorium values are in close agreement (99.6%), while the apparent 20% discrepancy in the uranium loading has not been resolved. The fuel rods used for these experiments weighed about 10.8 g.

3.0 STUDIES OF FUEL STICK 7-3-8-4

Fuel stick 7-3-8-4 was studied in a grossly contaminated hot cell.

3.1 General Procedure

Fuel stick 7-3-8-4 was weighed and burned whole on top of about 5 g of -80 mesh alumina with an O_2 flow rate of 50 cc/min (Fig. 3). The burner product was sieved to separate the fertile, fissile, and alumina fractions (+42, +80, and -80, respectively). The alumina fraction was leached twice with Thorex reagent, and the insoluble residue was weighed. All samples were analyzed for radiochemical and heavy metal content.

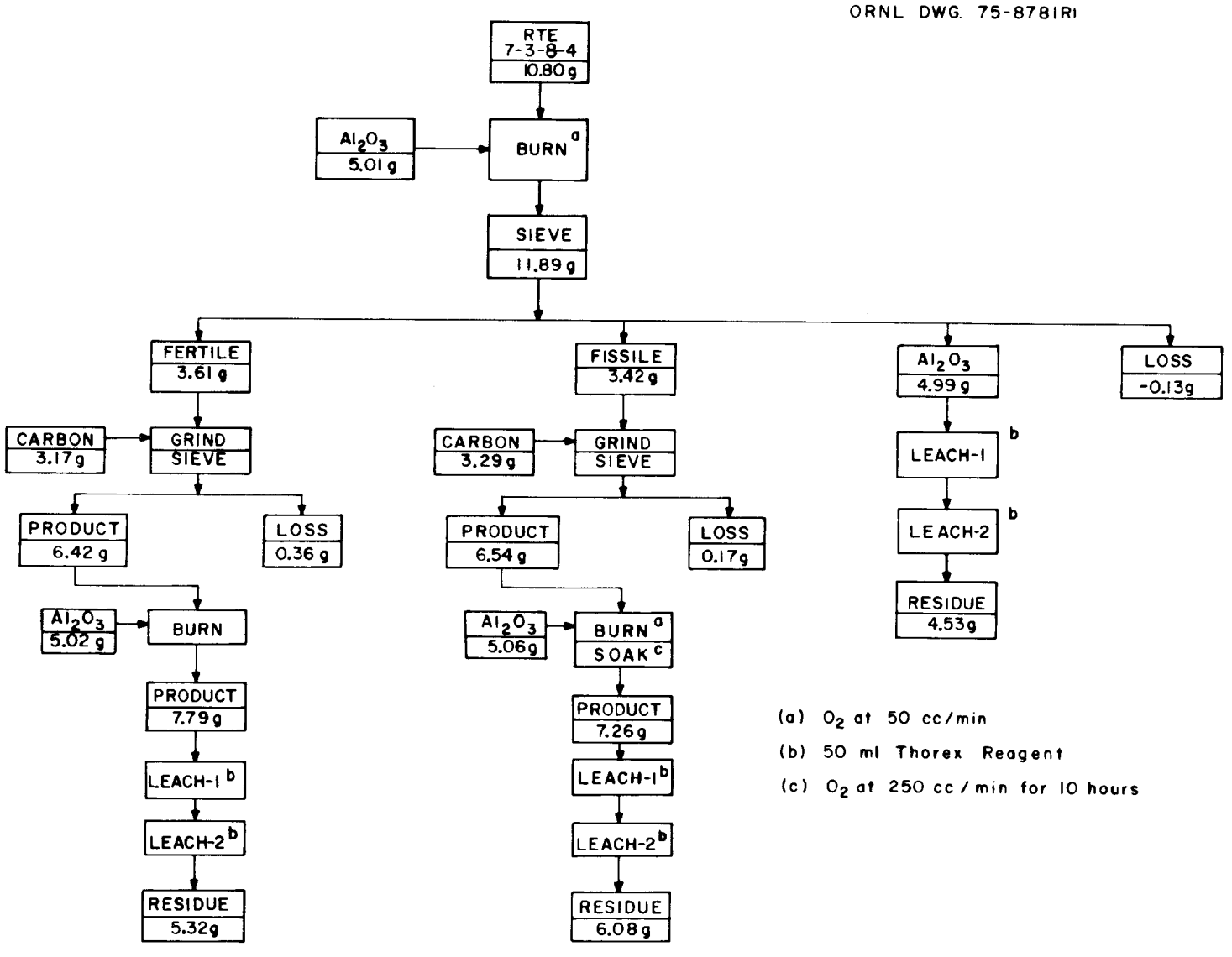

Fig. 3. Flowsheet used for fuel stick RTE-7-3-8-4 (TRISO UC_2-TRISO ThC_2).

The fertile and fissile fractions were processed independently in the following manner: (1) the beads were crushed in a small blender. (2) The blender was flushed with three 1-g batches of < 100 mesh carbon after each crushing operation to facilitate the removal of the broken particles. (3) After blending, the crushed fertile fraction was passed through a 60 mesh screen, and the crushed fissile fraction through a 100 mesh screen to ensure that all particles were broken. (4) The crushed particle (and carbon) fractions were then burned separately in oxygen on top of about 5 g of alumina at 750°C. The fissile fraction was soaked in a stream of pure O_2 for an additional 12 hours at 750°C after the CO_2 concentration had fallen off. (5) The burner products were leached twice with 13 M HNO_3--0.05 HF--0.1 M $Al(NO_3)_3$ (Thorex reagent), and the insoluble residues dried and weighed. The residues were fused. All liquid and solid samples were analyzed for heavy metal (U and Th) and radiochemical content.

The fission product content of the burner off-gas was of special interest, so the gas and particulates sampling train shown in Fig. 2 was utilized in this experiment. The primary filters were two sintered nickel discs (20-micron porosity) held in place in the burner top hat as shown in Fig. 1. The design was such that each filter could be removed independently without cross contamination.

The off-gas streams from both the primary and secondary burning operations were passed through a gas and particulates sampling train (Fig. 2) to ascertain the nature of any entrained and/or volatile materials present. After the sintered metal filters, the off-gas entered a 1-1/2 x 12 in. glass pipe at cell temperature (about 20°C) containing six Dacron filter discs (10-micron fiber filament), six fiberglass discs (three-micron fiber filament), and six fiberglass discs (1.5-micron fiber filament). A filter holder containing two Gelman Type A absolute filters was attached to the exit of the pipe. Two liquid scrubbers were next in line: first, refluxing 6 M HCl, then a 4 M NaOH scrubber at cell temperature. The gases were then passed through a drying column of anhydrous $CaSO_4$ and a final deentrainment filter before entering the 400-channel analyzer, CO_2 analyzer, and a gas collection bag. The total gas was sampled before venting to the cell off-gas system. In addition, the off-gases from the first leaches of fines, fertile, and fissile fractions were collected and analyzed for ^{85}Kr.

3.2 Analysis of the Initial Burn

The fuel stick was weighed (10.8 g) and placed on top of 5.0085 g of Al_2O_3 in a small burner. The burner was operated at 750°C with an oxygen flow rate of 50 cc/min under quiescent burning conditions.

The carbon burning rate under these conditions is about 1.5 g/hr. Once steady-state conditions were attained, the off-gases contained 80 to 82% CO_2. The residual gas was probably unused O_2. The ^{85}Kr release during the burn was 0.135% of the total recovered, indicating a small percentage of broken particles. The ^{3}H release was 20.6% of the total recovered. Weight loss during the burn was 3.95 g (36.3%), which agrees very well with the calculated amounts (3.96 g, 36.2%) of matrix graphite and outer pyrolytic carbon contained in the fuel stick. Small amounts of fission products were volatilized and/or entrained and were found on the primary filter; these results will be presented later.

The burner product was sieved to separate the fertile, fissile, and fines (Al_2O_3) fraction. The measured (predicted) weights for these fractions were 3.61 (3.69) g for the fertile fraction, 3.42 (3.15) g for the fissile fraction, and 4.99 (5.01) g for the fines fraction. Each fraction was processed independently in the manner described below.

3.3 Processing of the Sieved Burner Products (RTE-7-3-8-4)

3.3.1 Fines Fraction (-80 Mesh)

This fraction contained the alumina bed on which the fuel stick was burned and any broken particles and SiC hulls from the fertile and fissile fractions. About 99% of the input weight of alumina was recovered in this fraction. As shown in the flowsheet in Fig. 3, this fraction was simply leached twice with Thorex reagent, and the residue dried and weighed. The leached residue weighed 4.53 g (about 90% recovery). The residue and leach solutions were analyzed for heavy metals and radiochemical content. The heavy metals content of the leach solutions was 0.48% of the uranium and 0.36% of the thorium; the heavy metal losses to the fines residue were 0.18% and 0.005%, respectively. Complete data on fission product inventory and distribution are presented in Section 3.5. Fission gas release was also low during the

leaching period. The ^{85}Kr release during leaching was 0.083% of the total recovered, while 1.10% of the recovered ^{3}H was found in the leach solution.

3.3.2 Fissile Fraction (80 Mesh < Fissile < 42 Mesh)

This fraction contained TRISO-coated UC_2 particles. Thus, it was necessary to grind the particles and do an additional burn on this fraction prior to leaching (Fig. 3).

The grinder used was a Waring* blender with carbide tipped blades with connections added for collecting off-gases. The beads (3.42 g) were added to the blender chamber with 1.0240 g of carbon diluent. The mixture was ground for five 2-min intervals and removed. The chamber was flushed with two additional batches of carbon, one of 1.0875 g and one of 1.1800 g, to give a blender input of 6.71 g. The weighed output was 6.54 g (97% recovery). No material balance correction was made because the loss may have been pure carbon or any combination of fuel and carbon. This product was passed through a 100 mesh sieve to ensure that all particles were broken and placed in the burner on top of a 5.06-g bed of alumina.

Burning proceeded with an oxygen flow rate of 50 cc/min during the active burning period of 3 hr. We were interested to find out if fission products could be moved, i.e., volatilized and/or entrained, after completion of burning so we held the burner at temperature (750°C) for an additional 12 hr with an oxygen flow rate of 250 cc/min. The filters and scrub solutions were renewed between the burn and soak operations.

The burner product (7.26 g) was leached twice with Thorex reagent, the residue dried and weighed (6.08 g), and all samples were analyzed.

3.3.3 Fertile Fraction (+42 Mesh)

This fraction contained the larger TRISO coated ThC_2 particles. The same processing scheme used for the fissile particles was also used for this fraction. However, due to the lower burnup on this particle the soak at 750°C after completion of the burn was omitted.

*Reg. T.M.

The beads (3.61 g) were added to the blender chamber with 1.0372 g of 100 mesh carbon diluent (Fig. 3). This mixture was ground for four two-min intervals and removed. Two additional flushes totaling 2.1288 g of C were made. The ground mixture was passed through a 60-mesh sieve to ensure that all particles were broken. The grinder input was 6.78 g, and the weighed output was 6.42 g (95% recovery). No material balance correction was made. This product was burned at 750°C with an O_2 flow rate of 50 cc/min on top of 5.0161 g of Al_2O_3. The off-gases were passed through the train shown in Fig. 2. The burner output of 7.79 g was leached twice with Thorex reagent; the residue was dried and weighed (5.32 g), and all liquid and solid samples were analyzed.

3.4 Heavy Metals Distribution and Recovery (RTE-7-3-8-4)

The reported stick loading is 0.608 g (or, elsewhere 0.506 g) of uranium and 2.214 g of thorium, or a Th/U ratio of 3.64.[3] We calculated values of 0.499 g of uranium and 2.206 g of thorium, or a Th/U ratio of 4.42 using average values for the coated particle parameters and the reported weights of coated particles contained in the specimen.[3] Adding all streams containing heavy metals together, we found raw recoveries of 0.4964 g U and 1.942 g Th (Table 1). However, a simple comparison of input and output does not make allowances for burnup or for conversion of thorium to ^{233}U. For this, we must use the isotopic compositions and some assumptions.

3.4.1 Isotopic Uranium Results for RTE-7-3-8-4 with Burnup Analysis

The two main uranium products (fertile leach-1 and fissile leach-1) were sampled and analyzed for isotopic uranium values (Table 2). The fertile particle was originally pure ThC_2. The fissile particle had the isotopic concentration shown in the table (i.e., about 93% ^{235}U).

The total uranium measured was 0.4964 g. Assuming that the total uranium has the same composition as the two major leaches (i.e., that broken fissile particles are as probable as fertile particles), the quantities given in the total column can be calculated. These are given to five decimal places for the purpose of summation. A simplified uranium-235 balance is written:

Table 1. Uranium-thorium distributions for RTE-7-3-8-4 head-end reprocessing tests

	Uranium		Thorium	
	g	%	g	%
Fertile fraction (+42 mesh)	0.05301	10.68	1.8481	95.16
L-1	0.05292	10.66	1.8424	94.92
L-2	0.00004	0.008	0.0046	0.24
Residue	0.00005	0.010	< 0.0011	0.006
Fissile fraction (+80 mesh)	0.44004	88.65	0.0872	4.49
L-1	0.43600	87.83	0.0850	4.38
L-2	0.00380	0.77	0.002	0.10
Residue	0.00024	0.05	< 0.0002	0.01
Fines fraction[a] (-80 mesh)	0.00335	0.67	0.0069	0.36
L-1	0.00240	0.48	0.0067	0.35
L-2	0.00004	0.0008	0.0001	0.005
Residue	0.00091	0.18	< 0.0001	0.005
Total	0.49640	100.00	1.9422	100.0

[a]Alumina plus broken particles from the first burning.

Table 2. Uranium isotopic distributions for RTE-7-3-8-4

Isotope	Charged		Discharged				Total[a] found	
	+80 fraction		+42 fraction		+80 fraction			
	(g)	(%)	(g)	(%)	(g)	(%)	(g)	(%)
^{233}U	-	-	0.03807	71.93	0.00129	0.30	0.03970	8.00
^{234}U	0.00462	0.76	0.00195	3.69	0.00378	0.87	0.00581	1.17
^{235}U	0.5662	93.13	0.00825	15.59	0.37130	85.16	0.38560	77.68
^{236}U	0.0017	0.28	0.00293	5.54	0.02904	6.66	0.03246	6.54
^{238}U	0.03545	5.83	0.00171	3.24	0.03061	7.02	0.03283	6.61
Total	0.608	100	0.05292	100	0.43604	100	0.49640	100

[a]Includes fines and other uranium as having the same composition as the average leach.

$$^{235}U_{original} = {}^{235}U_{final} + {}^{235}U_{fissioned} + {}^{235}U_{(n\ capture)}$$

$$+ \text{ other losses} \qquad (1)$$

where

$$^{235}U_{(n\ capture)} \approx {}^{236}U_{final} - {}^{236}U_{original} = 0.03076 \text{ g} \qquad (2)$$

and ^{235}U (fission) is a function of the ^{137}Cs yield in fissile fractions.[3] Calculating

$$^{235}U \text{ fission} \sim \frac{(4.126 \times 10^{11}\ {}^{137}Cs \text{ dpm, fissile})}{(2.22 \times 10^{12} \text{ dpm/Ci})(137\text{g Cs/g-atom } {}^{137}Cs)} \times$$

$$\frac{(0.0102 \text{ g } {}^{137}Cs/Ci)(235 \text{ g } {}^{235}U/\text{g atom } {}^{235}U)}{(0.0621 \text{ g-atom } {}^{137}Cs/\text{g-atom } {}^{235}U)(0.979 \text{ decay factor})} \qquad (3)$$

$$\sim 0.05236 \text{ g},$$

we find the material balance of ^{235}U by substitution of Eqs. (2) and (3) in (1) above.

$$\text{Mat. Bal. } {}^{235}U = \frac{^{235}U \text{ output}}{^{235}U \text{ input}} \times 100 = 82.8\%. \qquad (4)$$

The total ^{235}U accounted for (0.4687 g) can be used to estimate the burnup based on the calculated output values:

$$^{235}U \text{ burnup } (\%) = \frac{^{235}U \text{ fissioned} \times 100}{\Sigma\, ^{235}U \text{ output}} = 11.2\% \text{ FIFA}. \qquad (5)$$

This would reduce to 9.2% if the reported input value (0.5662 g) were used.

A simplified thorium balance can also be written:

$$Th_{original} = Th_{final} + Th_{(n\ capture)} + \text{other losses of Th}, \qquad (6)$$

where

$$Th_{(n\ capture)} = {}^{233}U_{final} + {}^{233}U_{fissioned} + {}^{233}U_{(n\ capture)} \qquad (7)$$

and

$$^{233}U_{(n\ capture)} \sim {}^{234}U_{final} - {}^{234}U_{original} = 0.00119 \text{ g}. \qquad (8)$$

As above from ref. 3:

$$^{233}U_{fissioned} \sim \frac{(9.16 \times 10^{10} \text{ dpm } {}^{137}Cs \text{ fertile})(0.0102)(233)}{(2.22 \times 10^{12})(137)(0.0666)(0.979)}$$

$$= 0.0110 \text{ g } {}^{233}U \text{ fissioned}. \qquad (9)$$

Thus, the material balance for thorium is:

$$\frac{\text{Thorium output}}{\text{Thorium input}} \times 100 = 90.0\%. \tag{10}$$

The approximate ^{233}U burnup is:

$$^{233}U \text{ burnup} = \frac{^{233}U \text{ fissioned}}{^{233}U \text{ total formed}} = \frac{0.0110}{0.05189} = 21.2\% \text{ FIFA}. \tag{11}$$

Another material balance can be made, namely on ^{238}U.

$$^{238}U \text{ material balance} = \frac{^{238}U \text{ final}}{^{238}U \text{ original}} \times 100 = 92.6. \tag{12}$$

Thus we see that material balances on ^{235}U, ^{238}U, and ^{232}Th are 82.8%, 92.6%, and 90.0% based on reported input values and simplified burnup corrections. The burnup results based on cesium-137 can be in error by the amount of ^{137}Cs that was not measured (i.e., what plated out on the burner walls). There is no way, at present, to evaluate this effect. Calculated as above, our FIMA estimate is 2.3%, close to the average, 2.38%. GAC quotes 4.5% as the fuel stick burnup since fuel body No. 3 is in the maximum (peak) flux region.[8]

3.4.2 Breakage and Crossover Estimates (RTE-7-3-8-4)

Independent breakage estimates are possible from ^{85}Kr release measurements during the primary burning step and from the leach results. We estimate on the basis of the amounts of ^{85}Kr released during the primary burning and the fines leach (Table 5) that 0.2% of the particles were broken. Leach recoveries from the fines (-80) fraction indicated that 0.48% of the uranium and 0.35% of the thorium reported with the broken particles and alumina (Table 1). One can conclude with some confidence that the total breakage was less than 0.5%.

Crossover measurements come from the first leaches of the fertile and fissile fractions. Since the fertile particle was pure ThC_2 and the fissile particle was pure UC_2, we can estimate crossover from thorium as well as the isotopic analyses. Ignoring the small amounts of heavy metals found in second leaches and residues, we calculate crossover results as shown in Table 3. These range from 2.1 to 5.2%, depending on the material. A simple average of 3.7% is the indicated crossover (both ways).

Table 3. Crossover results for RTE-7-3-8-4

Percent found in	^{233}U	^{235}U	^{238}U	^{232}Th
Fertile fraction	-	2.1	5.2	-
Fissile fraction	3.2	-	-	4.4

3.5 Fission Product Distribution and Recovery (RTE-7-3-8-4)

The various process streams (off-gas, leaches, residues, ashes) were analyzed for fission product content as well as heavy metals. Because we do not measure these beforehand and we do not yet have confidence in the calculated postirradiation inventories for the fission products (see Sect. 5), we have added all the materials found by analysis and called this 100%. These data are presented in Table 4. Individual streams are described in more detail in the following sections.

3.5.1 Total Amounts Found and Overall Distribution of the Fission Products

One sees in Table 4 that between about 1.1 and 12.1% of the several fission products were found in the downstream gas equipment; most of this was found after the fissile particle burn. Ruthenium-106 was the predominant isotope at an indicated 12%.

Leaches contained between 31 to 98% of the several fission products. Most of the fission products were found in the fissile particle leach solution alone. Cerium-144 predominated, with 98% of it found in the leach solutions.

The residues contained between about 1 to 60% of the fission products; again, most was found in the fissile leach residue. Ruthenium-106 was the predominant isotope, with 59% found in the residue.

Some questionable values, found from internal comparisons, are indicated with (?). These are predominantly found in the primary burning results, which would be sensitive to cross-contamination because of their anticipated low levels.

Table 4. Fission product recoveries and main stream distributions for RTE-7-3-8-4

	Gross gamma	^{95}Zr	^{95}Nb	^{106}Ru	^{134}Cs	^{137}Cs	^{144}Ce
Grand total, dpm	6.84×10^{11} [a]	9.38×10^{11}	7.91×10^{11}	3.25×10^{11}	2.63×10^{11}	5.04×10^{11}	7.36×10^{12}
Distribution (as found), %	100	100	100	100	100	100	100
Off-gas trains, total	3.32	1.36	3.16	12.12	5.41	5.76	1.10
Primary burning	0.03	0.001	0.001	0.06	1.07(?)	0.83(?)	0.001
Fertile burning	0.003	0.001	0.001	0.02	0.04	0.07	0.001
Fissile burning	3.29	1.36	3.16	12.04	4.30	4.86	1.10
Leaches, total	79.8	96.1	61.9	30.7	80.2	79.2	98.2
Primary burner fines [b,c]	2.18	0.11	0.13	1.42(?)	5.55(?)	3.11(?)	0.26
Fertile particle ash [c]	9.71	11.59	9.78	8.19	16.24	15.04	6.23
Fissile particle ash [c]	67.87	84.36	51.96	19.69	58.37	61.01	91.71
Residues, total	16.8	2.6	35.0	58.8	14.4	15.1	0.68
Primary burner fines [c]	1.76	0.36	1.01	13.72(?)	1.56(?)	1.25(?)	0.24
Fertile particle ash [c]	1.23	0.03	1.07	18.18(?)	0.53	0.47	0.03
Fissile particle ash [c]	13.86	2.20	32.87	26.89	12.36	13.39	0.41

[a] cpm.
[b] Broken particles.
[c] Includes alumina bed.

These averages do not show the fine detail necessary for design purposes; one must look at the individual streams and isotopes. It is clear, however, that in every case the fissile particle provides the maximum fission product amounts for this burnup.

3.5.2 ^{3}H and ^{85}Kr Releases to the Off-Gas (RTE-7-3-8-4)

The off-gas train given in Fig. 2 was also used to measure the release of ^{3}H by converting it to the oxide with a heated CuO bed and trapping on molecular sieves, and to analyze for ^{85}Kr by catching the entire off-gas in a plastic bag and sampling for ^{85}Kr content after each operation.

The totals and percentages of ^{3}H and ^{85}Kr found in each process stream are given in Table 5. Atmosphere control in the blender and especially during sieving was inadequate to prevent hydrolysis and/or oxidation of the carbide kernels, resulting in some loss of gaseous fission products and probable distortion of the release behavior in subsequent steps. (The tritium is released only with difficulty from oxide matrices.) The totals found in the first run compared to the second run (Table 13) indicate that the tritium results were apparently more affected by the lack of atmosphere control than the ^{85}Kr results.

Describing, therefore, only the ^{85}Kr results, one sees that more than 97% of the krypton was obtained from the fissile particles after grinding and burning, and that the small amount released in the initial burn and leach of the primary burner ash plus alumina indicates a low breakage (about 0.2%) during the burning step.

3.5.3 Release of Other Fission Products to the Off-Gas

We attempted to measure the particle sizes and compositions of materials present in the off-gas from the burner. We chose a sequence of two filters held at 500°C to maximize through-transmission of semi-volatile substances and to evaluate the plateout on the second filter at 500°C in the absence of dust.

Table 5. Fission gas release for RTE-7-3-8-4

Operation	^{3}H	^{85}Kr
Total (dpm)	2.961×10^{8}	1.35×10^{11}
Percent of Total in:		
Initial burn	20.562	0.135
+42 Fraction		
Grind	33.771	1.263
Burn	2.685	0.989
Leach	0.008	0.106
Total	36.464	2.358
+80 Fraction		
Grind	1.431	70.072
Burn[a]	4.594	25.696
Soak[b]	35.803	1.565
Leach	0.042	0.091
Total	41.870	97.424
-80 Fraction		
Leach	1.104	0.083

[a]Three-hour active burning period.
[b]Held for 12 hours at 750°C after completion of burning.

Following the sintered metal filters was a packed fiber disk filter similar to that used in previous work,[1] having many disks with fiber diameters of 10 μm, 3.5 μm, and 1.5 μm followed by a Gelman Type A absolute filter. As described in Sect. 1, the residual gas stream was passed through boiling refluxing 6 M HCl and room-temperature 4 M NaOH to determine any other species present.

Redefining the sum of all the gamma-emitting materials recovered from the off-gases from the values in Table 4 to 100%, one obtains the distribution for the off-gas shown in Table 6. Generally, less than 1.0% of each fission product was released in the initial burn. We feel that the high values (15 to 20%) for $^{134,137}Cs$ in the initial burn represent cross-contamination. The secondary (fertile) burn released less than 1% of the totals in the off-gas stream. The bulk of the fission products released to the off-gas (> 90%) were found on the sintered metal filter after the fissile particle secondary burning. Decontamination factors for the two metal filters were $\sim 1000 \pm 500$. Unfortunately, little or no trapping was found on the fiber filter assembly; thus no particle size breakdown was obtained. The acid scrub had less than 1% of the activity. It is interesting to note that the percentages of the redefined totals found in the 4 M NaOH scrubs were essentially the same for both the fertile and fissile burns, and may represent the background contamination levels to be expected in this experiment.

The same data can be presented in terms of concentrations in the off-gas and percentages held up by the various pieces of off-gas equipment, each as an independent entity (Table 7). For convenience, the tabulated data express the concentrations of the particular gamma-emitting isotope as μCi/ℓ in the gas leaving the burner. This is defined as the sum of all of that isotope found on the two sintered metal filters, filter pack, and scrubs divided by the total gas volume. Burner operating temperature was held at 750°C. The fissile burning includes the soaking period. Omitting the $^{134,137}Cs$ results, the off-gas concentrations during the initial burn vary from 0.30 to 7.3 μCi/ℓ. The fertile particle secondary burning delivered similar values, and indicated that the frit and filter pack were only partially successful in retaining the fission

Table 6. Distribution of fission products in the off-gas trains from RTE-7-3-8-4

Percent of total carry-over during	Gross γ (%)	^{95}Zr (%)	^{95}Nb (%)	^{106}Ru (%)	^{134}Cs (%)	^{137}Cs (%)	^{144}Ce (%)
Initial burn	7.91	0.052	0.019	0.534	19.82 (?)	14.35 (?)	0.081
Fertile fraction burn							
Metal filter-1	0.0261	0.006	0.007	0.107	0.029	0.019	0.008
Metal filter-2	0.0007	0.0001	0.0001	0.003	0.001	0.0006	0.0006
Fiber filters	- [a]	-	-	0.010	0.0003	0.0002	0.0001
Acid scrub	0.720	-	-	-	0.519(?)	0.989(?)	0.010
Base scrub	0.100	0.004	0.0009	0.011	0.243	0.188	0.007
Subtotal	0.850	0.01	0.008	0.131	0.794	0.197	0.026
Fissile fraction burn							
Metal filter-1	85.11	82.81	88.40	75.20	73.09	77.90	82.79
Metal filter-2	5.96	17.03	11.32	23.98	6.07	6.24	16.98
Fiber filters	-	0.001	-	0.182	0.0005	0.0002	0.0006
Acid scrub	0.05	0.024	0.087	0.039	0.042	0.033	0.060
Base scrub	0.10	0.007	0.005	0.010	0.240	0.178	0.007
Subtotal	91.23	99.872	99.812	99.339	79.410	84.454	99.888

[a] Signifies sought, not found.

Table 7. Concentration and distribution of fission products in off-gas train from RTE-7-3-8-4

	^{95}Nb	^{95}Zr	^{106}Ru	^{134}Cs	^{137}Cs	^{144}Ce
Initial burn (μCi/liter)[a]	0.30	0.35	7.3	106(?)	157(?)	2.8
Fertile burn (μCi/liter)[a]	0.48	0.57	4.0	6.4(?)	21.5(?)	4.5
% retained by:						
Frit 1	87.50	59.41	81.68	3.64	1.59	31.12
Frit 2	1.25	0.99	2.29	0.13	0.05	2.33
Filter pack	-	-	7.63	0.04	0.02	0.39
Acid scrub	-	-	-	65.10(?)	82.64(?)	38.91(?)
Base scrub	11.25	39.60	8.40	31.10(?)	15.71(?)	27.24(?)
Fissile burn (μCi/liter)[a]	89	45	140	40	87	290
% retained by:						
Frit 1	88.57	82.92	75.65	92.00	92.35	82.92
Frit 2	11.34	17.05	24.12	7.64	7.40	17.01
Filter pack	-	0.001	0.18	0.001	0.002	0.001
Acid scrub	0.087	0.024	0.04	0.05	0.04	0.06
Base scrub	0.005	0.007	0.01	0.30	0.21	0.007

[a]This value for the entire run represents 100% for each of the three burns, separately divided by 12.0 liters for the initial burn, 7.4 liters for the fertile burn, and 126 liters for the fissile burn and soak.

products at 500°C. Most of the material that may have passed through the sintered metal frits ended up in the two scrub solutions because the filter pack failed to perform adequately. (There may have been some cross-contamination.)

3.5.4 Distribution of Fission Products in Leaches and Leached Residues

The leaching was done using two 2-hour leaches at the refluxing point of Thorex reagent [13 M HNO_3--0.1 M $Al(NO_2)_3$--0.05 M HF], followed by rinses with Thorex reagent after each leach. Each residue was dried and weighed, and samples of all fractions were sent in for analysis. The data are presented in Table 8. The total here, 100%, is based only on what was found in all the leaches and the residue (i.e., the gaseous materials are omitted from the totals). Using the gross gamma values (cpm and percent) as averages, about 17% of the fission products were found in the three residues (from fertile, fissile, and fines). Residues from the fertile fraction were generally 0.5 to 1.3% for the various isotopes except for ^{106}Ru (21%), a questionable value. Residues from the fissile fraction contained from 0.4 to 34% of the various isotopes. Residues from the primary burning step leach (alumina + fines fraction) contained generally 0.24 to 1.65% of the various isotopes, except here again ^{106}Ru was high (15.59%). One concludes that the samples marked with a (?) in Table 6 are cross-contaminated with ^{106}Ru, etc., since this behavior is not supported by the data from the second run.

4.0 SECOND EXPERIMENT — FUEL STICK 7-3-7-2

A fuel stick (No. 2) from an adjacent hole (No. 7) in the same fuel body (No. 3) was selected for the second experiment. Several improvements were made for this experiment. As part of the continuing Bldg. 4507 facility improvements, the cell was decontaminated and refurbished. A manipulator cave facility was added to the top of the cell to allow special handling and repackaging operations of contaminated materials. In general, low levels of radioactive materials should be easier to identify and quantify in this run. In addition, the SiC coated particle crushing operation and subsequent handling of the pyrophoric UC_2 and ThC_2 powders were done under much better

Table 8. Fission product distribution in the leached burner products, RTE-7-3-8-4

	Gross gamma (cpm)	^{95}Zr (dpm)	^{95}Nb (dpm)	^{106}Ru (dpm)	^{134}Cs (dpm)	^{137}Cs (dpm)	^{144}Ce (dpm)
Total in leaches[a]	6.61×10^{11}	9.25×10^{11}	7.66×10^{11}	2.86×10^{11}	2.49×10^{11}	4.75×10^{11}	7.28×10^{12}
% of total in:							
Fertile leach							
Leach 1	9.29	11.68	7.26	9.02	16.62	15.47	6.30
Leach 2	0.75	0.06	2.83	0.27	0.53	0.48	0.02
Residue	1.27	0.03	1.10	20.66(?)	0.56	0.50	0.03
Total	11.32	11.78	11.20	29.97(?)	17.71	16.46	6.36
Fissile leach							
Leach 1	65.66	77.51	48.56	20.98	57.43	60.21	91.48
Leach 2	4.54	8.08	5.10	1.40	4.18	4.48	1.24
Residue	14.34	2.23	33.94	30.56	13.05	14.21	0.41
Total	84.57	87.78	87.60	52.94	74.70	78.95	93.13
Fines + alumina leach							
Leach 1	2.19	0.10	0.12	1.42	5.66	3.16	0.26
Leach 2	0.08	0.002	0.01	0.19	0.20	0.15	0.005
Residue	1.82	0.36	1.04	15.59	1.65	1.33	0.24
Total	4.08	0.47	1.17	17.20(?)	7.51(?)	4.63(?)	0.505

[a]Based on the sum of materials found in the leaches and residues.

atmosphere control and rigid time constraints to virtually eliminate hydrolysis and air oxidation effects. The fission gas release measurements, especially ^{3}H, should be more realistic for Fort St. Vrain type HTGR fuels in this experiment.

4.1 Procedure Summary for Fuel Stick 7-3-7-2

The fuel stick 7-3-7-2 was weighed and placed on a bed of -80 mesh alumina and burned using pure oxygen at a flow rate of 50 cc/min. The burner ash was separated by sieving into a fertile fraction, a fissile fraction, and a fines fraction consisting of the alumina bed and broken particles. The fines fraction was leached twice with Thorex reagent; the fertile and fissile fractions were ground separately with extra carbon, burned, soaked at 850°C, and leached twice with Thorex reagent. The solutions and residues were analyzed. A second 20-μm sintered metal filter at 500°C was added to the burner top hat (Fig. 1) in both fertile and fissile post-grind burning operations; all other features were identical with the initial burning operation.

The combustion gases were analyzed by passing them through (1) one or two 20 μm pore-size sintered metal filters and a 0.2-μm pore size silver membrane filter maintained at 500°C, and (2) a second 0.2-μm silver membrane filter, a Gelman absolute filter, and molecular sieve traps (for tritium removal), all maintained at ambient cell temperature (Fig. 4). The gases were then passed through CO_2, CO, and ^{85}Kr detectors, a ^{3}H oxidizer, and additional molecular sieve traps to ensure complete tritium removal, a wet test meter, and finally collected in a bag for sampling before disposal.

4.2 Analysis of the Initial Burn of Fuel Stick 7-3-7-2

The fuel stick (10.846 g) was placed on top of 5.428 g of -80 mesh Al_2O_3 and burned at 750°C in a stream of pure O_2 at 50 cc/min (Fig. 5). The off-gases were passed through the sampling train shown in Fig. 4, with, however, only one (1) 20-μm sintered metal filter in the top hat at

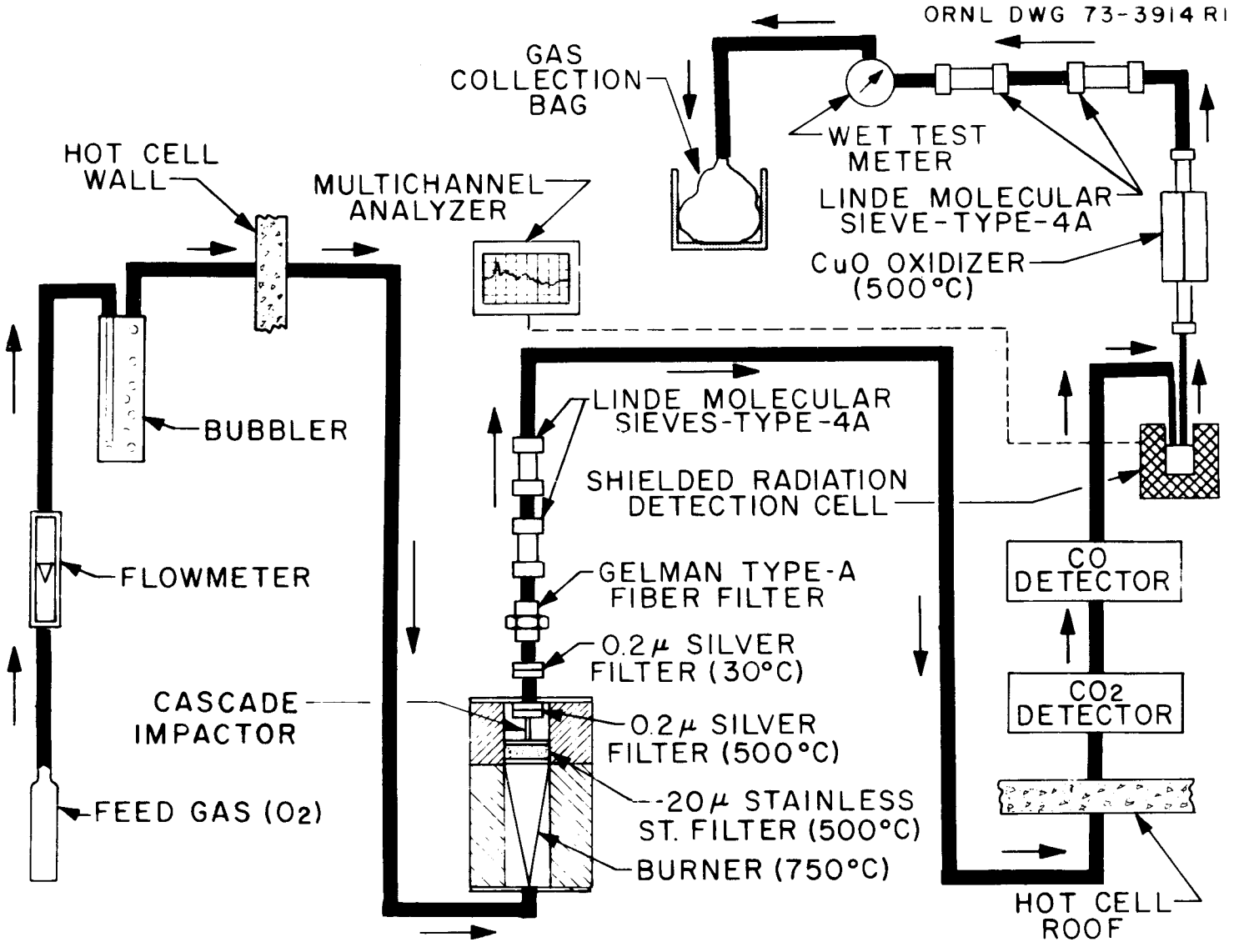

Fig. 4. Off-gas train used for RTE-7-3-7-2 burning (TRISO UC_2-TRISO ThC_2).

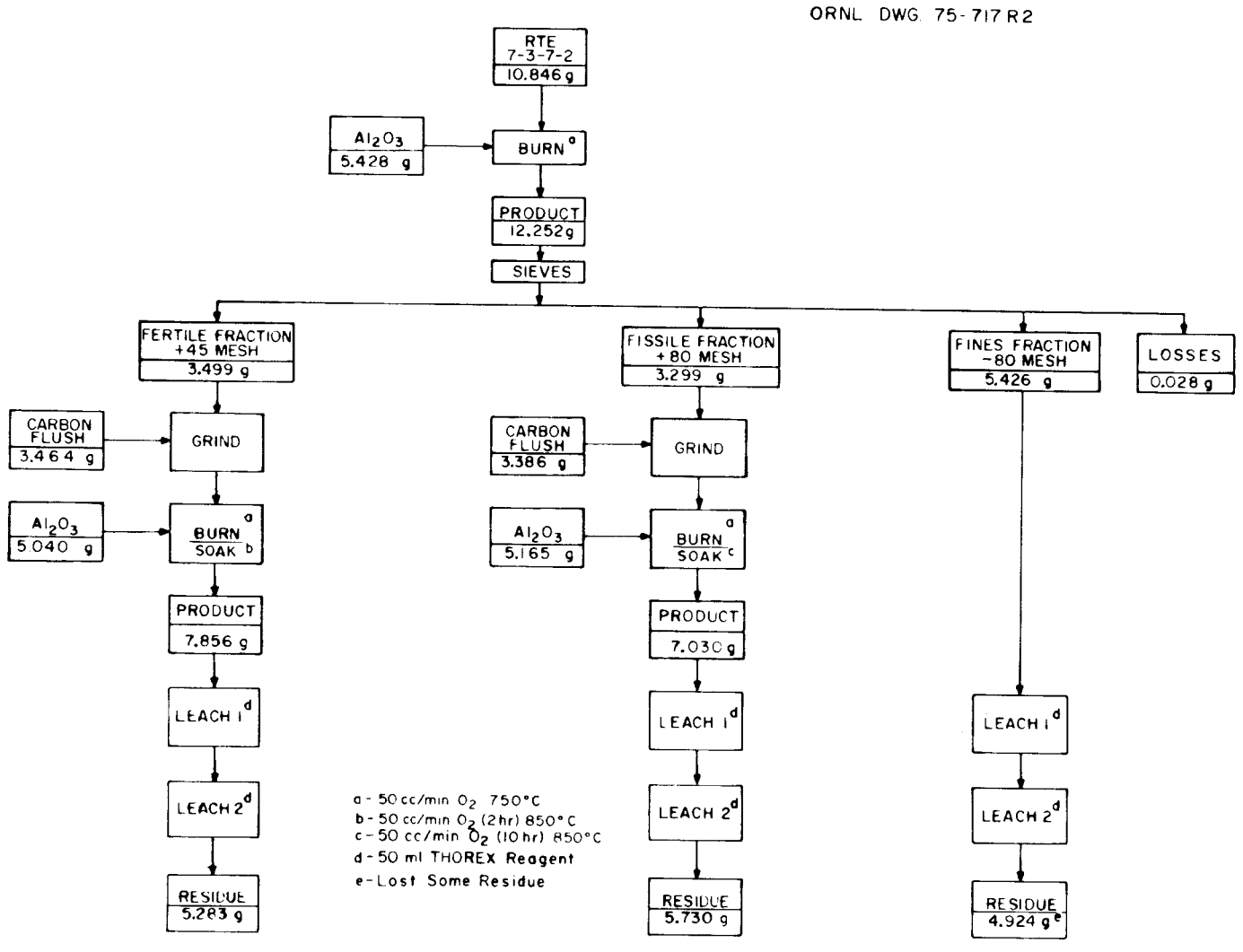

Fig. 5. Flowsheet used for RTE-7-3-7-2 (TRISO UC_2-TRISO ThC_2).

500°C. The off-gas composition during steady-state conditions was about 80% CO_2 with the residual being unused O_2. The carbon burning rate under these conditions is about 1.5 g/hr. Weight loss during the burn was 4.02 g, which compares well with the reported/calculated value of 3.96 g for the matrix graphite plus outer pyrolytic carbon (see also Table 17).

The burner product was sieved into three fractions: a fertile fraction ($\geq$ 45 mesh, 3.50 g), a fissile fraction (80 mesh $\leq$ fissile fraction < 45 mesh, 3.30 g), and a fines fraction (< 80 mesh, 5.43 g) containing the alumina support bed and any broken particles. There was a slight weight loss due to sieving (0.028 g, 0.2%).

The reported[3] values for hole 7 were 6-1/2 rods weighing 71.2 g, or 10.95 grams per rod, only 1% heavier than we measured for rod No. 7-3-7-2. The reported coated particle weights per rod are: fissile, 4.97 g; and fertile, 4.49 g, per fuel stick which corresponds to calculated SiC coated particle weights of 3.15 g and 3.69 g, respectively. We measured 3.299 g of SiC-coated fissile particles and 3.499 g of SiC-coated fertile particles. Although the sum agrees with the reported values, the recovered particle size/weight distribution implies a size crossover of $\sim$5 wt % of the fertile particles to the fissile fraction. Overlapping of size distributions of fissile and fertile coated particles is not uncommon. The off-gas train shown in Fig. 4 was used in burning steps.

4.3 Processing of the Sieved Burner Products

The sieved burner products were further processed separately as shown in Fig. 5 and described below.

4.3.1 The Fertile Fraction (> 45 Mesh)

Approximately 3.5 g of coated particles was ground in the blender with three flushes of carbon totaling about 3.5 g. With careful atmosphere control the unsieved blender product was transferred to the burner and burned at 850°C in pure O_2 at 50 cc/min on top of about 5 g of -80 mesh Al_2O_3. A 4.15-g weight loss was observed. After an additional 2-hr soaking period at 750°C and 50 cc/min O_2, the product was cooled and leached twice with Thorex reagent. The residue weighed 5.283 g.

4.3.2 The Fissile Fraction (80 Mesh < Fissile < 45 Mesh)

About 3.3 g of coated particles was ground in the blender with three flushes of carbon (total, about 3.4 g). Careful atmosphere control was maintained, but the product was not sieved to ensure 100% particle breakage since this would have resulted in air exposure. Previous experience shows that the blending technique is normally more than adequate to fracture all the coated particles. The product was burned at 750°C with a flow rate of 50 cc/min O_2 on top of about 5 g of -80 mesh Al_2O_3 and experienced about a 4.82-g weight loss. The burner was held at 850°C with an oxygen flow rate of 50 cc/min for an extra ten hours. The burner product was leached twice with Thorex reagent and left a residue of 5.730 g.

4.3.3 The Fines Fraction (< 80 Mesh)

The fines fraction (containing any broken particles and the alumina bed) weighed 5.426 g. It was given two leaches with Thorex reagent and analyzed. Some of the leached alumina bed could not be recovered from the dissolver after the dissolution; however, the bulk of the heavy metals should have been in solution. About 0.4% of the total uranium and about 0.7% of the total thorium were found in the fines sample solution and residue.

4.4 Heavy Metals Distribution and Recovery

About 0.608 g (or 0.506 g) of uranium and 2.214 g Th were reported[3] charged. A total of 0.562 g U* and 1.961 g Th was recovered. The amounts of heavy metals recovered from the various leaches and residues are given in Table 9. Since the burning was done quiescently, one would not expect significant amounts (from a material balance point of view) of heavy metals to be carried into the off-gas.

---

*The first leaches were found to have ^{238}U contaminant present. Values are corrected (see Sect. 4.4.1).

Table 9. Uranium-thorium distributions for RTE-7-3-8-4

	Uranium[a]		Thorium	
	g	%	g	%
Fertile fraction (+45 mesh)	0.02715[a]	4.83	1.8774	95.73
Leach 1	0.02532[a]	4.51	1.8650	95.10
Leach 2	0.00030	0.05	0.0121	0.62
Residue	0.00153	0.27	<0.0003	<0.01
Fissile fraction (+80 mesh)	0.53242[a]	94.77	0.0708	3.61
Leach 1	0.50812[a]	90.45	0.0684	3.50
Leach 2	0.00310	0.55	0.0022	0.11
Residue	0.02120	3.77	0.0002	0.01
Fines fraction[b] (-80 mesh)	0.00221[a]	0.39	0.0129	0.66
Leach 1	0.00040[a]	0.06	0.0122	0.62
Leach 2	0.0002	0.04	0.0006	0.03
Residue	0.00162	0.29	<0.0001	<0.01
Total	0.56178[a]	100	1.9611	100

[a]The first leaches are corrected for a uranium-238 contaminant (about 0.020 g in each fraction).

[b]Alumina plus broken particles from the first burning.

The uranium was distributed about 5% in the fertile fraction, about 95% in the fissile fraction, and about 0.4% in the fines. Similarly, almost 96% of the thorium was found in the fertile fraction, about 3.6% in the fissile fraction, and 0.7% in the fines. The residues are significant.

4.4.1 Isotopic Uranium Analyses with Material Balances

The complete set of isotopic uranium analyses indicated that the samples had been contaminated with ^{238}U (Table 10). About 0.094 g of ^{238}U was found, whereas only 0.03545 g was reported added. The excess amount was nearly constant at (0.0202 $\pm$ 0.0048) g in each fraction; fissile, fertile, and broken particles. The contamination with ^{238}U apparently occurred during processing in the hot cell, but the mechanism is unexplained.

Accepting the quantities of other isotopes correct as reported and adjusting the total ^{238}U content to equal the input amount (0.03545 g), we have recalculated the isotopic percentages as shown in Table 10. From this table we see that the corrected fertile (+45) fraction uranium was 94.6% ^{233}U, while the fissile (+80) fraction uranium was 85.8% ^{235}U. The totals of each isotope, as corrected, are also shown for each fraction. Assuming a breakage of 0.5% fissile particles and 1.0% fertile particles, we calculated a fines fraction uranium distribution as shown in the last line of the fines summary in Table 10. These are quite similar to that found after subtracting the ^{238}U contamination.

Calculating the ^{235}U balance as per the logic in Sect. 3.4.1, we find:

$$^{235}U \text{ material balance} = \frac{^{235}U \text{ final} + {}^{235}U \text{ fission} + {}^{235}U \text{ n capture}}{^{235}U \text{ initial}} \times 100$$

$$= 100.2\ \% \text{ on a reported basis.}$$

Likewise, the thorium material balance is:

$$^{232}Th \text{ material balance} = \frac{^{232}Th \text{ final} + {}^{233}U \text{ final} + {}^{233}U \text{ fissioned} + {}^{233}U \text{ n capture}}{^{232}Th \text{ initial}}$$

$$= 90.0\% \text{ on a reported basis.}$$

Table 10. Isotopic uranium concentrations from RTE-7-3-7-2 found after irradiation

	^{233}U	^{234}U	^{235}U	^{236}U	^{238}U
Fissile Fraction (+80 mesh, first leach)					
Average % found	0.193	0.821	82.247	6.253	10.483
Range,[a] min.	0.190	0.809	82.146	6.215	10.37
Range,[a] max.	0.197	0.834	82.347	6.291	10.60
Corr. %[b]	0.201	0.856	85.789	6.522	6.632
Total found, g, corr.	0.00107	0.00456	0.45676	0.03472	0.03531[b]
Fertile Fraction (+45 mesh, first leach)					
Average % found	52.083	2.373	0.553	0.010	44.960
Range,[a] min.	51.204	2.359	0.500	0.006	44.028
Range,[a] max.	52.963	2.388	0.606	0.013	45.892
Corr. %[b]	94.629	4.305	0.987	0.020	0.079
Total found, g, corr.	0.02569	0.00117	0.00027	0.000005	0.00002[b]
Fines Fraction (-80 mesh, first leach)					
Average % found	0.258	0.026	1.679	0.071	97.965
Range,[a] min.	0.25	0.019	1.635	0.064	97.917
Range,[a] max.	0.26	0.032	1.723	0.078	98.013
Corr. %[b,c]	12.658	1.266	78.481	2.532	5.063
Calculated[d]	9.2	1.0	77.8	5.8	6.1
Total found, g	0.00028	0.00003	0.00173	0.00006	0.00012[b]
Grand totals found, g	0.02704	0.00567	0.45876	0.03478	0.03545[b]
, %	4.81	1.02	81.66	6.19	6.31

[a]95% confidence level.
[b]Corrected for U-238 contamination (see text).
[c]Values of questionable accuracy.
[d]See text (1% fertile breakage, 0.5% fissile).

4.4.2 Burnup Estimates for Fuel Stick 7-3-7-2

The simplified burnup estimates based on the isotopic uranium results and the logic in Sect. 3.4.1 are:

$$^{235}U \text{ burnup, \% fissioned} = \frac{0.0755 \times 100}{0.5674} = 13.3\%$$

$$^{235}U \text{ burnup, \% fissioned} = \frac{0.00298 \times 100}{0.03107} = 9.6\%.$$

The decay factor used to correct for ^{137}Cs was 0.959.

4.4.3 Crossover and Breakage Estimates

Release of noble gas ^{85}Kr during the initial burn indicated a breakage of about 0.13%.

The isotopic uranium results have been corrected for ^{238}U content due apparently to cross-contamination in the hot cell. This tends to reduce the confidence one would place on crossover and breakage values determined from these values. However, for completeness, the results of the calculations are presented below (Table 11).

Table 11. Crossover and breakage results for fuel stick 7-3-7-3

Percent found	^{232}Th	^{233}U	^{234}U	^{235}U	^{236}U	ΣU
Fines (breakage)	0.66	1.04	0.52	0.38	0.17	0.39
Fissile (crossover)	3.61	3.96	-	-	-	-
Fertile (crossover)	-	-	20.1	0.06	0.01	-

Breakage for the fertile particle was estimated from thorium and ^{233}U contents of the fines and was found to be 0.67 and 1.04%, respectively. The thorium results are presumably not influenced by the problems with ^{238}U. Breakage of the fissile particles as determined by ^{235}U and ^{236}U results indicates less than about 0.5% breakage. We conclude that fertile particle breakage (to -80 mesh fragments) is less than about 1%, while fissile particle breakage is less than about 0.5% by the same criterion. These results are independently supported by fission products analyses of the leach solutions (see Sect. 4.5.1, Table 12).

Crossover values, presumably due to an overlapping of size fractions in the original coated particles, are 3.6 to 4.0% for ^{232}Th and ^{233}U to the fissile stream and 0.06 to 0.01% for the ^{235}U and ^{236}U to the fertile stream. By comparison, the weights of coated particles in Sect. 4.2 gave a crude crossover estimate of 5% fertile particles to the fissile fraction after sieving the initial burner product.

4.5 Fission Product Distribution and Recovery

The fate of the fission products was followed by analysis of the major process streams and selected pieces of equipment.

4.5.1 Total Amounts Found and the Overall Distribution of Fission Products

The total amounts of fission products detected by gamma scan analysis are presented in Table 12. These are collected and grouped to show the fractions reporting to each major stream for each type particle.

We found between less than about 0.1% (^{144}Ce) and almost 26% (^{106}Ru) of selected fission products in the off-gas streams and equipment. The releases of the less volatile materials (e.g., ^{95}Zr-^{95}Nb) are of the order of 1%, while the more volatile materials ($^{134,137}Cs$) average about 6% release from the fissile particle secondary burner. (This burning step included a 10-hr soaking period at 850°C.)

By far, the bulk of the fission products (about 75 to 90%) reported to the leaches, with the fissile particle leach predominating at this burnup. Surprisingly, the residues accounted for about 18 to 24% of many fission products with a range between 10% (^{144}Ce) and 43% (^{106}Ru). The fissile particle fraction was the dominant contributor. The fissile particle residue also contained 3.77% of the total uranium (Table 9). This could imply that some uncrushed SiC-coated particles had been included in the particle crusher product.

4.5.2 Krypton and ^{3}H Releases to the Off-Gas

The releases of ^{3}H and ^{85}Kr were followed throughout all process steps. The recovered amounts and the percentages are given in Table 13.

About 26% of the ^{3}H was recovered from the primary burn. This has been attributed to tritium sources other than ternary fission. The ash from the initial burn released about 0.06% of the total ^{3}H found in the leaches. An additional 13.5% was recovered from the fertile particles, with 13.2% from the off-gas of the burning step alone, and with about 0.015% reporting to the fertile ash leach solution.

Table 12. Fission product recoveries and main stream distribution for RTE-7-3-7-3

	^{95}Zr	^{95}Nb	^{106}Ru	^{125}Sb	^{134}Cs	^{137}Cs	^{144}Ce
Grand total, dpm	1.532×10^{10}	2.129×10^{10}	1.266×10^{11}	4.635×10^{10}	1.983×10^{11}	5.954×10^{11}	3.800×10^{12}
Distribution (as found), %							
Off-gas trains							
Primary burner	0.03	< 0.01	0.01	< 0.01	< 0.01	0.01	0.01
Fertile burner	0.02	0.05	0.41	0.02	0.02	0.02	0.01
Fissile burner	0.89	0.42	25.23	2.08	6.01	6.06	0.02
Total	0.94	0.47	25.65	2.10	6.04	6.09	0.04
Leaches							
Primary burner fines[a,b]	0.06	0.07	0.02	0.04	0.04	0.04	0.03
Fertile particle ash[b]	4.58	6.73	4.96	4.77	1.81	3.58	2.28
Fissile particle ash[b]	75.92	70.91	26.64	69.21	73.29	71.82	87.03
Total	80.56	77.71	31.62	74.02	75.14	75.44	89.34
Residues							
Primary burner fines[a,b]	0.39	1.27	0.41	0.51	0.43	0.44	0.22
Fertile particle ash[b]	0.16	0.54	0.53	0.50	0.13	0.25	0.04
Fissile particle ash[b]	17.96	20.00	41.78	22.87	18.25	17.79	10.36
Total	18.51	21.81	42.72	23.88	18.81	18.48	10.62

[a]Broken particles.
[b]Includes Al_2O_3 bed.

Table 13. Fission gas release to the burner off-gas during processing of RTE-7-3-7-2

	^{3}H		^{85}Kr	
	dpm	%	dpm	%
Total	1.746×10^{9}	100	1.525×10^{11}	100
Initial burn		26.0		0.129
Fines leach		0.06		$\leq$ 0.010
Fertile fraction (+45)				
Grind		0.06		0.221
Burn		13.23		3.220[a]
Soak (2 hr)		0.21		-
Leach		0.02		<0.020[b]
Total		13.52		3.461
Fissile fraction (+80)				
Grind		0.01		19.016
Burn		56.47		77.377
Soak (2 hr)		2.24		b
Soak (8 hr)		1.66		b
Leach		0.04		0.125
Total		60.42		96.518

[a]Value is known to be low due to a leak in the CuO unit which occurred at the peak release time.
[b]Sought, not found.

The remaining 60.4% was recovered from the fissile particles; most was evolved during the burning step and the remainder was released in the post burn 10-hr soaking step. The grand total ^{3}H found in all the three leaches was 0.12%, indicating an overall ^{3}H decontamination factor of 830 (1/0.0012) by burning.

Krypton-85 releases indicated that only about 0.13% of the fissile particles were broken during the primary burning (quiescent). At least 3.5% of the ^{85}Kr was recovered from the fertile particles since some was lost to the gas bag by a leak in the CuO unit. Only about 6.4% of this was released during the grinding step. On the other hand, almost 20% of the krypton in the fissile particle was released during the grinding step and almost all of the remainder was released during burning. Of the total krypton found, < 0.16% reported to the three leacher off-gases for this carbide type fuel, yielding a decontamination factor for ^{85}Kr between about 650 to 800 due to crushing, grinding, and burning.

Because of the leak, we have evaluated ^{85}Kr results from the multichannel analyzer. This analyzer is upstream of the leak site (Fig. 5). A NaI scintillator crystal looks at an approximately 25-ml sample volume in a right circular cylinder. Although it would be possible to calibrate this detector and obtain absolute dpm values for given counting rates, uncertainties as to the integrated throughput due to changing flow rates, back-pressures, and counter dead times make its use as an on-line absolute detector somewhat questionable at this time. In this run, however, nearly all flowsheet segments were controlled at a given wet-O_2 or argon-H_2 feed, namely 50 cc/min, and uniform counting "live times" of 20-min intervals (followed by about a 2.5-min printout). Thus, in principle, the total counts found in any run segment (e.g., the fissile particle grinding step) should represent some constant factor of the true integrated amount of ^{85}Kr passed through the counter during this step. We have presented the gross counts for one channel (the ^{85}Kr maximum) in Table 14. The distribution is inferred from a simple percentage of the total counts. The distribution is not unreasonable.

The apparent total ^{85}Kr released to the three leachers using the counter results was 0.18%, which compares well with the $\sim$ 0.14% found from the gas bag analyses.

Table 14. ^{85}Kr distribution as inferred from multichannel analyzer gross counts (measured in peak Kr-85 channel with background correction)

Run segment	Gross counts	%	Measured
Initial burn			
Burn	2831	0.32	0.13
Fines leach	254	0.03	0.01
Total	3085	0.35	0.14
Fertile fraction			
Grind	8,983	1.02	0.22
Burn and soak	98,548	11.21	3.22[a]
Leach	707	0.08	0.02
Total	108,238	12.31	3.46[a]
Fissile fraction			
Grind	454,119	51.65	19.02
Burn and soak	313,231	35.62	77.38
Leach	606	0.07	0.12
Total	767,956	87.34	96.52
Grand Total	879,279	100	100

[a]Sample known to be low due to leak in CuO trap; hence some was not held in gas bag for analysis.

4.5.3 Release of Other Fission Products to the Off-Gas

The off-gas train shown in Fig. 4 was disassembled for analysis after each run. Gamma-scan results are presented in Table 15 for those fission products found on the sintered metal filters or downstream equipment. This table is an amplification of the data in Table 12, Sect. 4.5.1. The table gives the totals recovered from the off-gas, the fraction this represents of all the fission products recovered, and, in addition, gives average concentrations (as μCi/liter) experienced during the various processing steps. The remainder of the table indicates the relative distribution of each material.

Except for ^{75}Se, of which 99% was found on the first sintered metal frit after primary burning, the bulk of the fission product materials (91 to 100%) were found in the line leach. During the fertile burn and 2-hr soak, generally larger amounts of fission products were found in the off-gas train; however, the concentrations were of the same magnitude (about 0.2 to 10 μCi/liter) as from the primary burning. Again, the great bulk of material (91 to 100%) was recovered from the line leach. The line leaches are more subject to cross-contamination in the cell. This would tend to overestimate release rates.

The release during the fissile particle burn (and 10-hr soaking period) was much larger, with concentrations increasing by up to two orders of magnitude (to ∿ 350 μCi/liter) for the volatile fission products (^{106}Ru, ^{125}Sb, ^{134}Cs, ^{137}Cs). Values for ^{95}Zr, ^{95}Nb, and ^{144}Ce were comparable (0.8 to ∿ 10 μCi/liter) to the concentrations measured in the previous two run segments. In the crushed fissile particle burning segment, the two sintered metal filters had 90 to 100% of the recovered activity, with the line leach contributing only up to about 10%.

It is interesting to note that, except for a trace of 0.24-MeV gamma activity (identity unknown), the cold 0.5-μm silver sintered metal filter as well as the absolute filter were below the detection limits for gamma activity.

4.5.4 Distribution of Fission Products in Leaches and Leach Residues

The bulk of the fission products (75 to 90%) are found in the leaches and leach residues as was shown in Table 12, Sect. 4.5.1. For simplicity,

Table 15. Plateout and trapping of fission products in downstream off-gas equipment for RTE-7-3-7-2

	^{95}Nb	^{95}Zr	^{106}Ru	^{125}Sb	^{134}Cs	^{137}Cs	^{144}Ce	^{75}Se
Total found in off-gas train(dpm)	1.004×10^{8}	1.446×10^{8}	3.250×10^{10}	9.708×10^{8}	1.197×10^{10}	3.627×10^{10}	1.589×10^{9}	9.738×10^{5}
Percent of grand total	0.47	0.94	25.65	2.10	6.04	6.09	0.042	100
Distribution within fractions								
Initial burn[a] (μCi/liter)	0.02	0.10	0.41	-	0.25	1.2	10.5(?)	0.02
SS frit No. 1, %	d	-	-	-	1.21	0.48	-	99.1
Hot Ag filter, %	-	-	-	-	-	-	-	0.9
Line leach, %	100	100	91.96	-	98.79	99.54	100	-
Cold Ag filter, %	No detectable gamma activity							
Gelman absolute filter, %	No detectable gamma activity							
Fertile burn[b] (μCi/liter)	0.16	0.04	7.8	0.13	0.47	1.4	2.4	-
SS frit No. 1, %	-	<3.74	5.10	-	0.90	1.48	7.76	-
SS frit No. 2, %	-	<0.75	1.28	-	0.06	0.06	1.17	-
Hot Ag filter, %	0.08	0.08	<0.01	-	0.01	0.01	0.12	-
Line leach, %	99.92	<95.43	93.61	100	99.03	98.45	90.91	
Cold Ag filter, %	No detectable gamma activity							
Gelman absolute filter, %	No detectable gamma activity							
Fissile burn[c] and soak (μCi/liter)	0.85	1.3	306	9.2	114	345	8.8	-
SS frit No. 1, %	67.65	80.35	54.46	93.52	98.91	98.84	87.27	-
SS frit No. 2, %	26.86	17.24	35.68	4.88	0.99	1.05	7.57	-
Hot Ag filter, %	0.07	<0.22	0.53	0.03	<0.01	<0.01	<0.33	-
Line leach, %	5.43	2.19	9.33	1.56	0.11	0.12	4.83	-
Cold Ag filter, %	Trace of 0.24 MeV gamma activity							
Gelman absolute filter, %	Trace of 0.24 MeV gamma activity							

[a]Volume = 21.925 liters.
[b]Volume = 47.04 liters (with soak).
[c]Volume = 30.0 liters (with soak).
[d]Sought - not found (where dashes are shown).

Table 15. Plateout and trapping of fission products in downstream off-gas equipment for RTE-7-3-7-2

the leachers will be treated as separate units. Consequently, only the totals found in the leaching steps are used for the determination of distribution percentages (Table 16). The primary burner residue (including Al_2O_3) had a very uniform percentage (0.47 ± 0.12) of fission products, lending credence to a breakage of about 0.5% for the fissile particles. The bulk of this (about 90%) was unleachable.

About a factor of 10 more fission products were found in the fertile particle leaching step (4.8 ± 2.1%). For this step, however, more than about 90% of the fission products were dissolved during leaching. Between about 91 and about 97% of the fission products were found with the fissile particle stream. A surprising feature was the high retention of almost all fission products by the leached fissile particle residue (about 18 to 24%). The high uranium content (3.77%) of this residue implies some unbroken SiC-coated particles were present in the leacher.

5.0 COMPARISONS OF RECOVERED QUANTITIES OF MATERIALS WITH PREDICTIONS

5.1 Fuel Stick Parameters

The theoretical amounts of materials in these fuel sticks were calculated from the data on coated particle and fuel sticks given in ref. 3. These are presented in Table 17. Using the recovered weight data, it was possible to estimate many of these parameters for the two fuel sticks. The agreement between experiment and calculation is generally good. There is some discrepancy in the uranium values, both in the predicted and found values.

5.2 Comparison of Quantities of Radioisotopes Found with Predicted Amounts

We are continuing to attempt to tie our results of total quantities found in our experiments to the as-received input amounts for the fuels. The simple expedient of sending a representative fuel sample for analysis before treatment should, in principle, fully specify the quantities present in the irradiated fuel; however, in fact, this only puts the crushing, burning and dissolution (including residues) steps on Analytical Chemistry's shoulders (instead of on ours) and all the uncertainties are still present. In fact, since we will naturally have the greater quantities to work with, given equal losses, we should have less percentage error doing this work ourselves.

Table 16. Fission product distribution in the leached burner products for RTE-7-3-7-2

	^{95}Zr	^{95}Nb	^{106}Ru	^{125}Sb	^{134}Cs	^{137}Cs	^{144}Ce
Total in the leaches (100%)	1.517×10^{10}	2.119×10^{10}	9.413×10^{11}	4.538×10^{10}	1.86×10^{11}	5.597×10^{11}	3.798×10^{12}
Primary burner fines leach, %							
L-1	0.0	0.07	0.03	0.04	0.04	0.04	0.03
L-2	0.01	0.01	0.01	0.01	0.01	0.01	0.01
Residue[a]	0.39	1.27	0.55	0.52	0.46	0.46	0.22
Total	0.44	1.34	0.58	0.56	0.50	0.50	0.25
Fertile leach, %							
L-1	4.95	6.42	6.58	4.34	1.91	3.79	2.27
L-2	0.03	0.34	0.09	0.53	0.01	0.03	0.01
Residue[a]	0.16	0.54	0.72	0.51	0.14	0.26	0.04
Total	4.78	7.30	7.39	5.38	2.06	4.08	2.32
Fissile leach, %							
L-1	72.52	55.22	31.87	66.12	77.29	75.75	86.36
L-2	4.13	16.04	3.96	4.58	0.73	0.71	0.68
Residue[a]	18.13	20.10	56.20	23.36	19.42	18.94	10.37
Total	94.78	91.36	92.03	94.06	97.44	95.40	97.41

[a]Includes Al_2O_3.

Table 17. Comparison of found and predicted coated particle parameters for one fuel stick (RTE-7-3, type i fuel, TRISO UC_2-TRISO ThC_2)

	Predicted (calc. pre-irradiation) (g)	Found 7-3-8-4 (g)	Found 7-3-7-2 (g)
Fissile particle			
U	0.506[a]	0.496	0.562[b]
UC_2 kernel	0.557	-	-
Buffer coat and I PyC coat	1.130	1.22	1.434
SiC coat	1.467	> 1.02[e]	> 0.565[e]
O PyC coat	1.817	-	-
Total weight	4.97[c]	-	-
SiC C/P weight	3.15	3.42	3.30
Fertile particle			
Th	2.214	1.941	1.961
ThC_2 kernel	2.430	-	-
Buffer coat and I PyC coat	0.610	0.84	0.682
SiC coat	0.646	> 0.30[e]	> 0.243[e]
O PyC coat	0.804	-	-
Total weight	4.49[c]	-	-
SiC C/P weight	3.69	3.61	3.50
Matrix graphite	1.49[d]		
Burnable matrix and O PyC	3.96	3.92[f]	4.02[f]
Fuel stick weight	10.95	10.80	10.846

[a]Based on other data from GAC. This is listed as 0.608 g in the same report.
[b]Corrected for ^{238}U contamination.
[c]Quoted loading per stick for body 7-3, type i fuel.
[d]By difference 10.95 g - 4.49 g - 4.97 g.
[e]Distorted by dissolved Al_2O_3.
[f]Includes any grinding losses.

The amounts of heavy metals at the end of life were estimated at GAC.[8] These are compared with the amounts found in the two experiments (Table 18). Generally, the agreement is within -10 to +15%. The original loadings may have varied by as much as ± 10%.[8] The only area of serious disagreement is in the quantity of ^{236}U found, where the estimate was 70% lower than the average found. Future comparisons should clarify the degree to which calculations can predict the experimental findings.

Table 18. Comparison of amounts of heavy metals predicted at end of life with amounts found

Isotope	Predicted[8]	Found		Ratio found (avg.)/predicted
		7-3-8-4	7-3-7-2	
^{232}Th	2.173	1.942	1.961	0.90
^{233}U	0.0290	0.0397	0.0270	1.15
^{234}U[a]	0.0052	0.0058	0.0057	1.11
^{235}U	0.4435	0.3856	0.4588	0.95
^{236}U	0.0198	0.0325	0.0348	1.70
^{238}U	0.0325	0.0328	0.0354[b]	1.01
^{237}Np	0.0006	-	-	-
^{239}Pu	0.0001	-	-	-
^{240}Pu	0.0002	-	-	-

[a]Initial = 0.0046 g; this reduced to 0.0044 g, and 0.0008 g was bred.

[b]Adjusted by material balance; omitted from average.

Recoveries for fuel stick 7-3-7-2 based on ORIGEN[5] predictions, mass analysis, and the total recovered amounts of ^{137}Cs and ^{144}Ce as indicators of the burnup, fission yield,[6] and decay for comparison the experimental results are presented in Table 19. No consistency was found, and values ranged from about 40 to 180%. One still does not know whether the calculations or the sums of the experimental results make better estimates of the incoming amounts of materials.

Since ^{75}Se is not a fission product, the amount found could be explained by neutron activation of about 30 μg natural Se present in the fuel stick matrix material.[7]

Table 19. Comparison of recovered amounts of selected fission products with predictions

	Percent recovered/calculated using:		
	ORIGEN	^{137}Cs-^{144}Ce	Mass analysis
^{3}H	42.5	56.7	49.1
^{85}Kr	125.1	177.5	144.4
^{95}Zr	99.96	33.5	27.5
^{95}Nb	64.1	-	-
^{106}Ru	40.2	43.1	35.4
^{137}Cs	68.8	98.8	81.1
^{144}Ce	102.5	101.2	83.0

We find that the lack of quantitative data on the incoming irradiated materials (i.e., heavy metals content, isotopic distributions, and fission product contents) limits the degree of internal quality control that we can exercise in our experiments. We will continue to improve the computer predictions, such as ORIGEN,[5] to increase our confidence that our results are based on good material recoveries, and to indicate in which areas we must improve our techniques or our codes.

In addition, we are evaluating non-destructive gamma assay counting as a means for obtaining burnup estimates. This work will be expanded.

Relative behavior of irradiated fuel materials may well be largely independent of the exact burnup or, for that matter, the precise amount of fission products present. For example, assume that half of the total ruthenium remains undetected because it plated out on the upper surfaces of the burner during the fissile particle burning step. Assume further that we have recovered 100% of the ruthenium that went through the sintered metal filters (about 2.5% of the total); then the filter decontamination factor (d.f.) will be a factor of 2 too low, a d.f. of about 40 when about 80 would be correct. For the off-gas, this is conservative and can be tolerated. If the downstream collection efficiency were less than 100%, the d.f. will tend to approach the "real" value, provided the collection efficiency does not fall significantly below the assumed 50%.

However, the ruthenium plateout on the burner walls could have other deleterious effects (i.e., localized heating and burnout). Thus we feel that better overall material balances are necessary for comprehensive design evaluation of hot cell work. For this reason, it is most desirable to perform replicate experiments and to seek the best methods for determining the quantities of isotopes present in our starting irradiated fuel samples.

The two experiments reported here were performed a year apart, with the attendant decay. The second was done in a much cleaner cell. Consequently, where fission product traces are sought, the lower values from fuel stick 7-3-7-2 would generally be more applicable. The absolute amounts should be corrected for decay. Likewise, tritium behavior in the run with RTE-7-3-7-2 would probably be more representative due to the better atmosphere control.

6.0 REFERENCES

1. V. C. A. Vaughen, J. R. Flanary, J. H. Goode, and H. O. G. Witte, Hot Cell Evaluation of the Burn-Leach Method for Reprocessing Irradiated Graphite-Base HTGR Fuels, ORNL-4120 (February 1970).
2. C. L. Fitzgerald and V. C. A. Vaughen, Head-End Reprocessing Studies with Irradiated HTGR Fuels: II. Studies with Dragon Fuel Compacts, ORNL-5004 (to be issued).
3. R. P. Morrisette and K. P. Steward, Recycle Test Element Program Design Fabrication and Assembly, GA-10109, Gulf General Atomic Co., San Diego, Calif. (1971).
4. E. L. Long, Jr., R. B. Fitts, and F. J. Homan, Fabrication of ORNL Fuel Irradiated in the Peach Bottom Reactor and Postirradiation Examination of Recycle Test Elements 7 and 4, ORNL-TM-4477 (September 1974).
5. M. J. Bell, ORIGEN - The ORNL Isotope Generation and Depletion Code, ORNL-4628 (May 1973).
6. M. E. Meek and B. F. Rider, Compilation of Fission Product Yields, General Electric Co. (1974).
7. C. W. Kee, Oak Ridge National Laboratory, private communication, March 23, 1973.
8. C. Wallroth, General Atomic Company, "Fuel Rod and Data Exchange for Peach Bottom Test Elements," private communications, Mar. 25, 1975, and Oct. 24, 1975.
9. Proceedings of the Twelfth AEC Air Cleaning Conference, Vol. 2, CONF-720823 (August 1972), p. 528.

APPENDIX. SUPPLEMENTARY INFORMATION ON RTE-7

Table A-1. Coated particle parameters (average values), GAC data[3]

	UC_2	ThC_2
Kernel diameter, μm	99	384
density, g/cc	10.435	8.86
Buffer thickness μm	51	48
density, g/cc	1.30	1.13
Inner isotropic thickness, μm	21	23
density, g/cc	1.81	1.85
SiC thickness, μm	20	23
density, g/cc	3.21	3.20
Outer isotropic thickness μm	32	41
density, g/cc	1.73	1.79

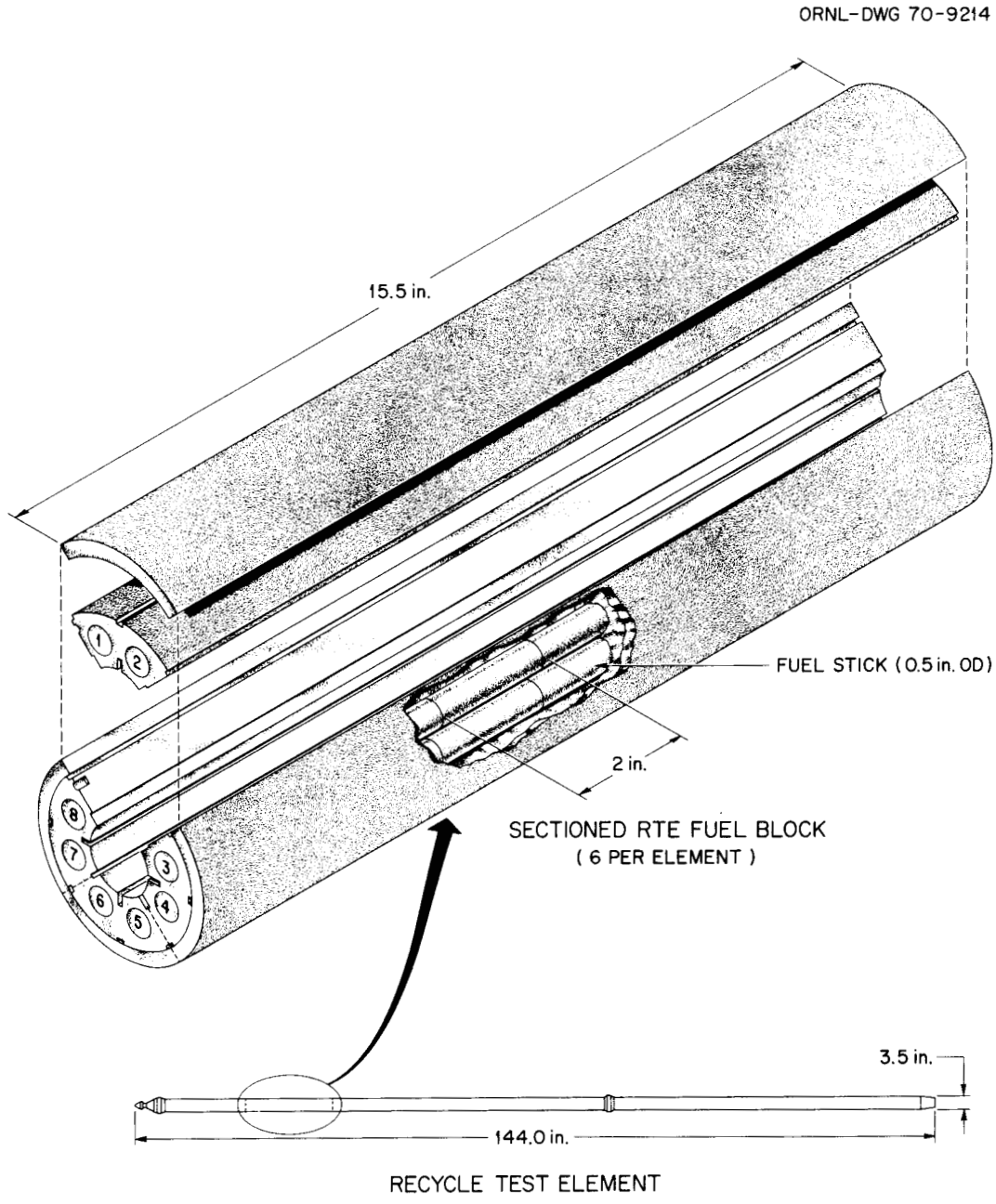

Fig. A-1. Isometric drawing of sectioned recycle test element (RTE).

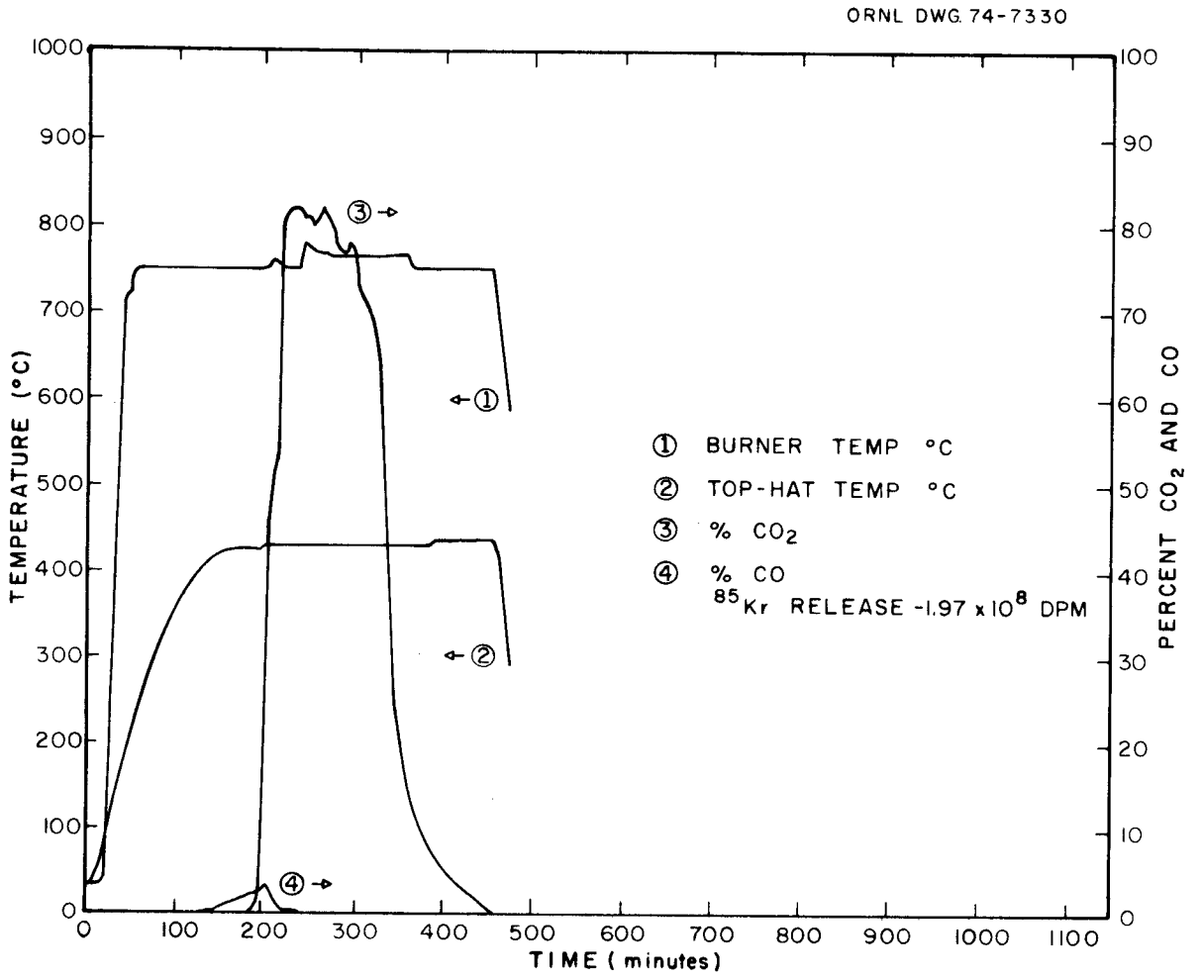

Fig. A-2. Primary burn RTE-7-3-7-2.

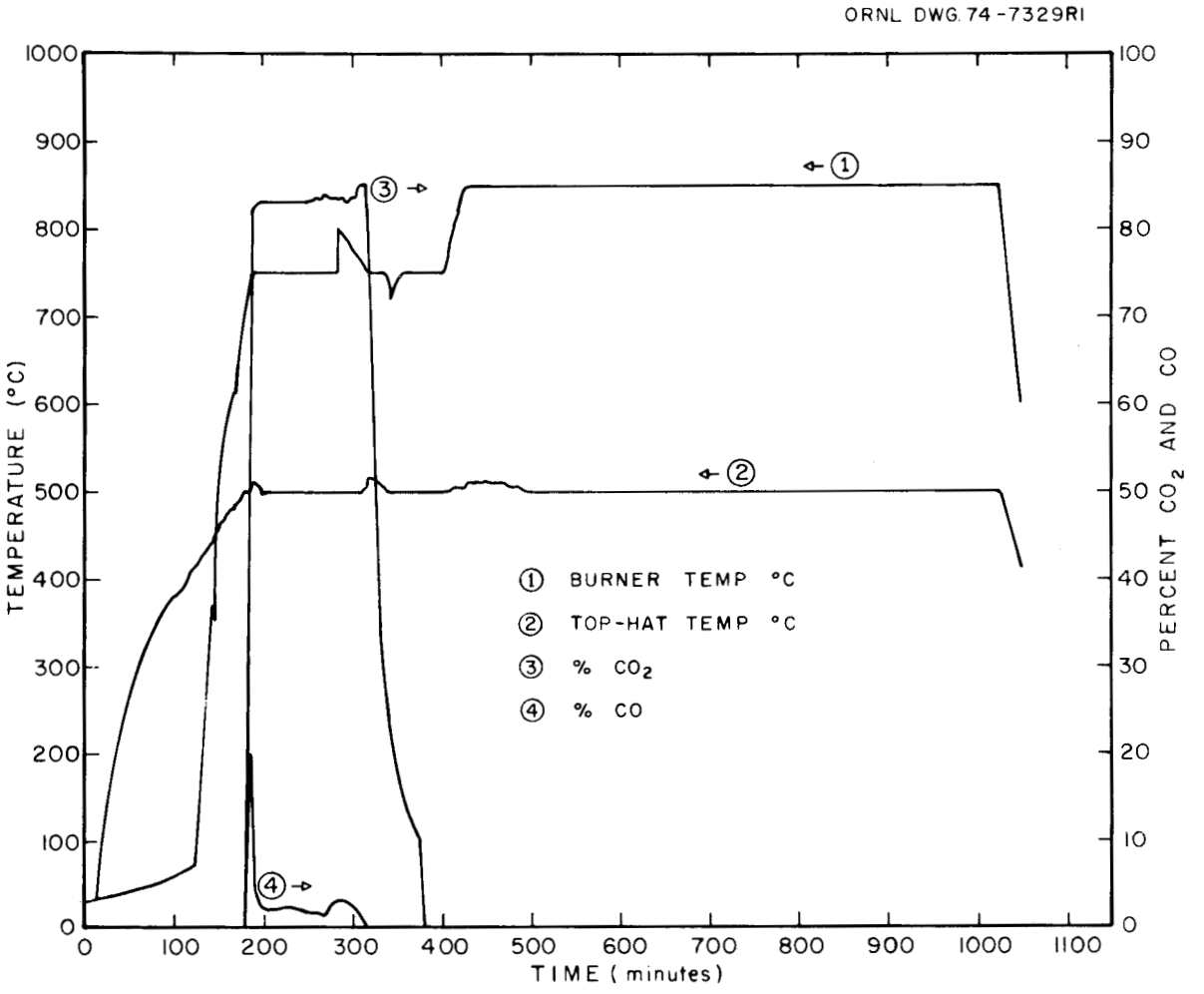

Fig. A-3. Secondary burn, ground fissile particles, RTE-7-3-7-2.

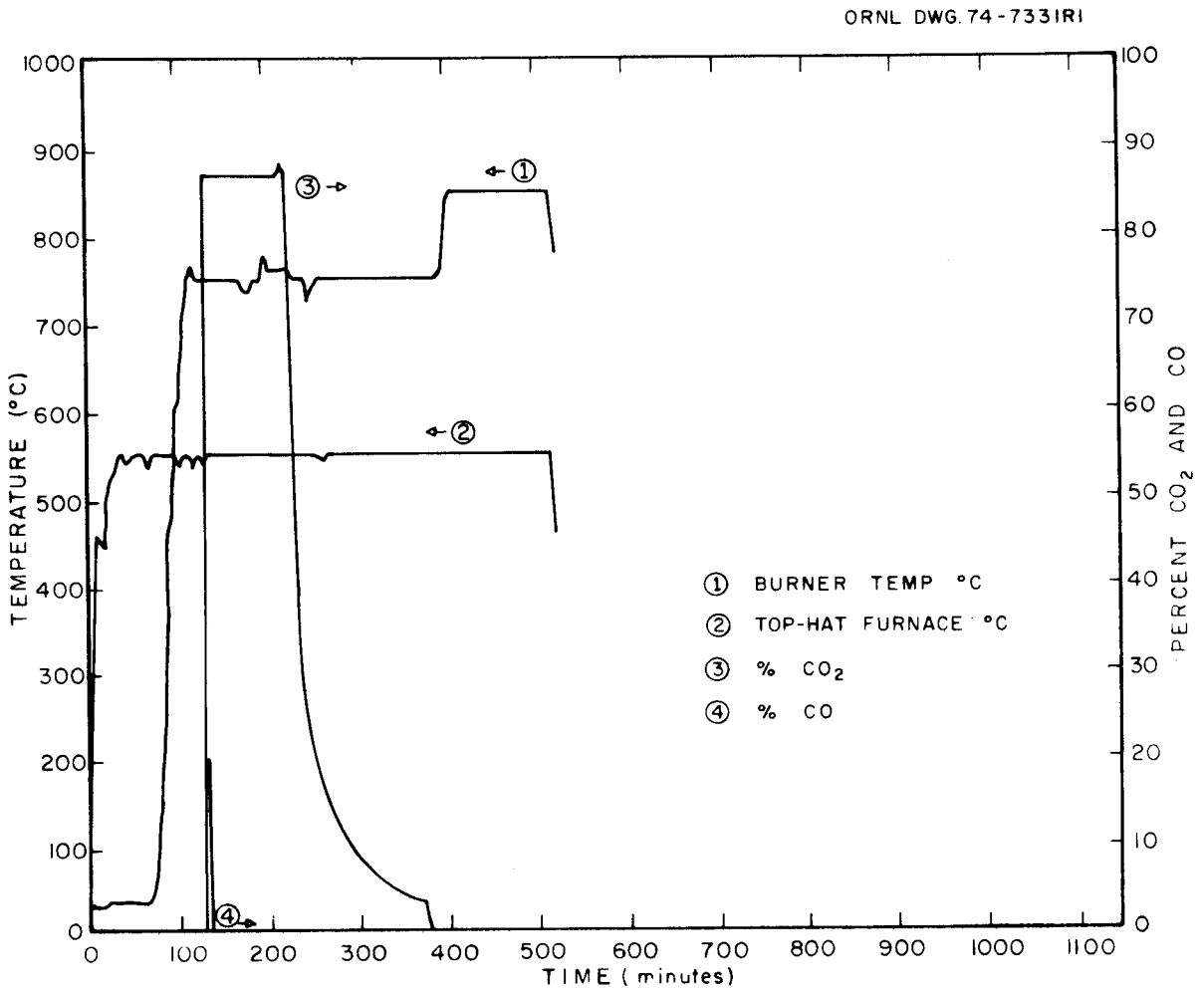

Fig. A-4. Secondary burn, ground fertile particles, RTE-7-3-7-2.

ORNL-5090
UC-77 — Gas-Cooled Reactor Technology

Internal Distribution

1. R. D. Ackley
2. J. L. Anderson
3. R. E. Blanco
4. J. O. Blomeke
5. A. L. Boch
6. W. D. Bond
7. R. E. Brooksbank
8. K. B. Brown
9. R. A. Bradley
10. W. L. Carter
11. R. Canon
12. C. F. Coleman
13. E. L. Compere
14. J. A. Conlin
15. J. H. Coobs
16. J. Cooper
17. M. Crowley
18. D. A. Costanzo
19. F. L. Culler
20. W. Davis, Jr.
21. F. E. Dearing
22. F. F. Dyer
23. D. E. Ferguson
24. C. L. Fitzgerald
25. E. J. Frederick
26. R. W. Glass
27. W. S. Groenier
28. J. H. Goode
29. P. A. Haas
30. F. E. Harrington
31. C. C. Haws
32. J. W. Hill
33. F. J. Homan
34. A. R. Irvine
35-72. P. R. Kasten
73. R. K. Kibbe
74. C. W. Kee
75. W. J. Lackey
76. R. E. Leuze
77. E. L. Long, Jr.
78-79. R. S. Lowrie
80. K. H. Lin
81. T. B. Lindemer
82. A. L. Lotts
83. A. P. Malinauskas
84. W. R. Martin
85. E. E. McCombs
86-87. K. J. Notz
88. A. R. Olsen
89. H. Postma
90. W. H. Pechin
91. R. H. Rainey
92. A. D. Ryon
93. C. D. Scott
94. J. D. Sease
95. J. H. Shaffer
96. R. L. Shepard
97. J. W. Snider
98. R. G. Stacy
99. V. J. Tennery
100. M. L. Tobias
101. D. B. Trauger
102. W. E. Unger
103. K. Valentine
104-108. V. C. A. Vaughen
109. B. T. Walters
110. T. N. Washburn
111. D. C. Watkin
112. R. P. Wichner
113-114. R. G. Wymer
115-116. Central Research Library
117. Document Reference Section
118-120. Laboratory Records
121. Laboratory Records (LRD-RC)
122. ORNL Patent Section

123. W. K. Davis (Consultant)
124. J. C. Frye (Consultant)
125. J. J. Katz (Consultant)
126. W. K. Davis (Consultant)
127. R. B. Richards (Consultant)

External Distribution

128. Research and Technical Support Division, ERDA, ORO
129. Director, Reactor Division, ERDA, ORO
130-131. Director, Nuclear Fuel Cycle and Production, ERDA, Washington, D. C. 20545
132-133. Director, Reactor Research and Development, ERDA, Washington, D. C. 20545
134-295. Given distribution as shown in TID-4500 under Gas-Cooled Reactor Technology category (25 copies — NTIS)