OAK RIDGE NATIONAL LABORATORY
OPERATED BY
UNION CARBIDE CORPORATION
NUCLEAR DIVISION
POST OFFICE BOX X
OAK RIDGE, TENNESSEE 37830

ORNL
CENTRAL FILES NUMBER
73-9-4
Supplement 1

DATE: June 20, 1975

SUBJECT: Building 4507, High Level Chemical Development Facility: Operating Procedures (Supplement to ORNL-CF-73-9-4)

TO: D. E. Ferguson

FROM: J. H. Goode

This document contains supplemental information and operating procedures that were developed or revised since the issuance of the previous building manual in 1973. Routine and emergency procedures involved in building operation and in the handling of radioactive materials in Bldg. 4507 are described.

Approved:

Jerry H Goode
Building Supervisor

A P McLaughlin
Section Chief, Chemical Development Section

John B Rush
Radiation Control Officer

Everett Sharp
Applied Health Physics Supervisor

NOTICE This document contains information of a preliminary nature and was prepared primarily for internal use at the Oak Ridge National Laboratory. It is subject to revision or correction and therefore does not represent a final report. The information is only for official use and no release to the public shall be made without the approval of the Law Department of Union Carbide Corporation, Nuclear Division.

For Internal Use Only

ORNL
CENTRAL FILES NUMBER
73-9-4
Supplement 1

OAK RIDGE NATIONAL LABORATORY
OPERATED BY
UNION CARBIDE CORPORATION
NUCLEAR DIVISION

POST OFFICE BOX X
OAK RIDGE, TENNESSEE 37830

DATE: June 20, 1975

SUBJECT: Building 4507, High Level Chemical Development Facility; Operating Procedures (Supplement to ORNL-CF-73-9-4)

TO: D. E. Ferguson

FROM: J. H. Goode

This document contains supplemental information and operating procedures that were developed or revised since the issuance of the previous building manual in 1973. Routine and emergency procedures involved in building operation and in the handling of radioactive materials in Bldg. 4507 are described.

Approved:

Building Supervisor

Section Chief, Chemical Development Section

Radiation Control Officer

Applied Health Physics Supervisor

NOTICE This document contains information of a preliminary nature and was prepared primarily for internal use at the Oak Ridge National Laboratory. It is subject to revision or correction and therefore does not represent a final report. The information is only for official use and no release to the public shall be made without the approval of the Law Department of Union Carbide Corporation, Nuclear Division.

TABLE OF CONTENTS

Page

EMERGENCY PROCEDURES FOR BUILDING 4507

Procedure

A-1: 4507 Emergency Evacuation Plan - Fire, Explosion, or Activity Release - Revision 1
A-2: Other Emergencies 4
A-3: General Emergency Procedures 7
A-3-1. Loss of Cell Off-Gas or Vessel Off-Gas Duct Vacuum 8
A-3-2. Loss of Normal Electrical Power 9
A-3-3. Loss of Building Air Supply 12
A-3-4. Loss of Other Services 13
A-3-5. Non-Liquid-Metal Fire in the Cells 14
A-3-6. Sodium or NaK Fire in the Cells 15

ROUTINE OPERATING PROCEDURES

B-1: To Manually Place Building into Containment 16
B-2: To Remove Building from Manual Containment 17
B-3: To Work on 4507 Emergency Power System or Containment System 18
B-4: To Reset Evacuation Alarm Horns 19
B-5: Procedure for Jetting Tank 30 Pit Sump (see ORNL-CF-73-9-4)
B-6: Procedure for Jetting Cell 1 Pit Sump (see ORNL-CF-73-9-4)
B-7: Procedure for Jetting Cell 2 Pit Sump (see ORNL-CF-73-9-4)
B-8: Procedure for Jetting Cells 3 or 4 Sumps or Scuppers (see ORNL-CF-73-9-4)
B-9: Solution Transfer from T-30 to Cell 4 Storage (see ORNL-CF-73-9-4)
B-10: Routine Building 4507 Checks (see ORNL-CF-73-9-4)
B-11: Transfer of Materials at Building 4507 (see ORNL-CF-73-9-4)
B-12: 4507 Checklist for Scheduled Power Outage (see ORNL-CF-73-9-4)
B-13: Loading Fuel into or Out of Hot Garden 20
B-14: Gantry Crane Operation 22
B-15: Penthouse Overhead Door Operation 25
B-16: Loading Fuel Into and Out of Bldg. 4507 27
B-17: Preparation of Sample Containers 29
B-18: Removal of Beta-Gamma Samples from Cells 1 and 2 30
B-19: Use of Six-Inch Diameter Sample Port on Cell 2 32
B-20: Use of Fourteen-Inch Port in Cell 2 33
B-21: Replacing Gloves on Glove Boxes 35
B-22: Procedure for Bagout Operations 36
B-23: Removal of Large Objects Through Large Ports on Glove Boxes 42

Page

Procedure

B-24: Removal of Manipulators 46
B-25: Operation of Sample Carrier 47
B-26: Operation of Contaminated Scrap Carrier 49
B-27: Operation of Uranium Shielded Cask D-38 (AEC-OR USA 5787/BLF) 51
B-28: Operation of Hot Garden Carrier 52
B-29: Operation of Garden Carrier No. 2 53
B-30: Operation of Dry Hole Charger Cask 54
B-31: Operation of HRLEL Carriers 55
B-32: Operation of Other CTD Casks 56
B-33: Protective Clothing and Respiratory Protection 57
B-34: Decontamination from Radioactivity 60

Appendix G of ORNL-CF-73-9-4, Operation of Building 4556 Cell Ventilation and Filtration Facility 63

PROCEDURE A-1 Date Revised: June 1975

HIGH RADIATION LEVEL CHEMICAL DEVELOPMENT FACILITY - BLDG. 4507

4507 EMERGENCY EVACUATION PLAN

Fire, Explosion, or Activity Release

If a continuous bell alarm or evacuation horn is heard:

1. Leave the building by nearest exit. If you are in the area where a release of airborne activity has occurred and are wearing a gas mask, wait in the nearest airlock vestibule until help arrives. If you are not wearing a gas mask, go outside the vestibule door and wait for assistance to come to you. Do not spread any contamination!
2. As you leave, push red "Evacuate" button near your exit (note location on building plan, Fig. 1) to actuate building containment and sound the evacuation horn audible throughout building. This will also summon Fire Department, Health Physics, Guards, and Laboratory Shift Supervisor.
3. If you were not present in the area where a release occurred, once outside, proceed to passageway connecting Building 4507 and Building 4500, Wing 1, the assembly point and emergency HP checking station.
4. Remain at checking station until surveyed and released by HP.
5. After assembly at check station, building supervisor or alternate will:
   a. Actuate building containment if not already done (note location of outside "Evacuate" button).
   b. Notify line supervision in Chemical Technology Division as rapidly as possible.
   c. Determine if everyone is out of the building and assembled.
   d. Hold assembled personnel at check station until aid arrives.

A-1 (Continued)

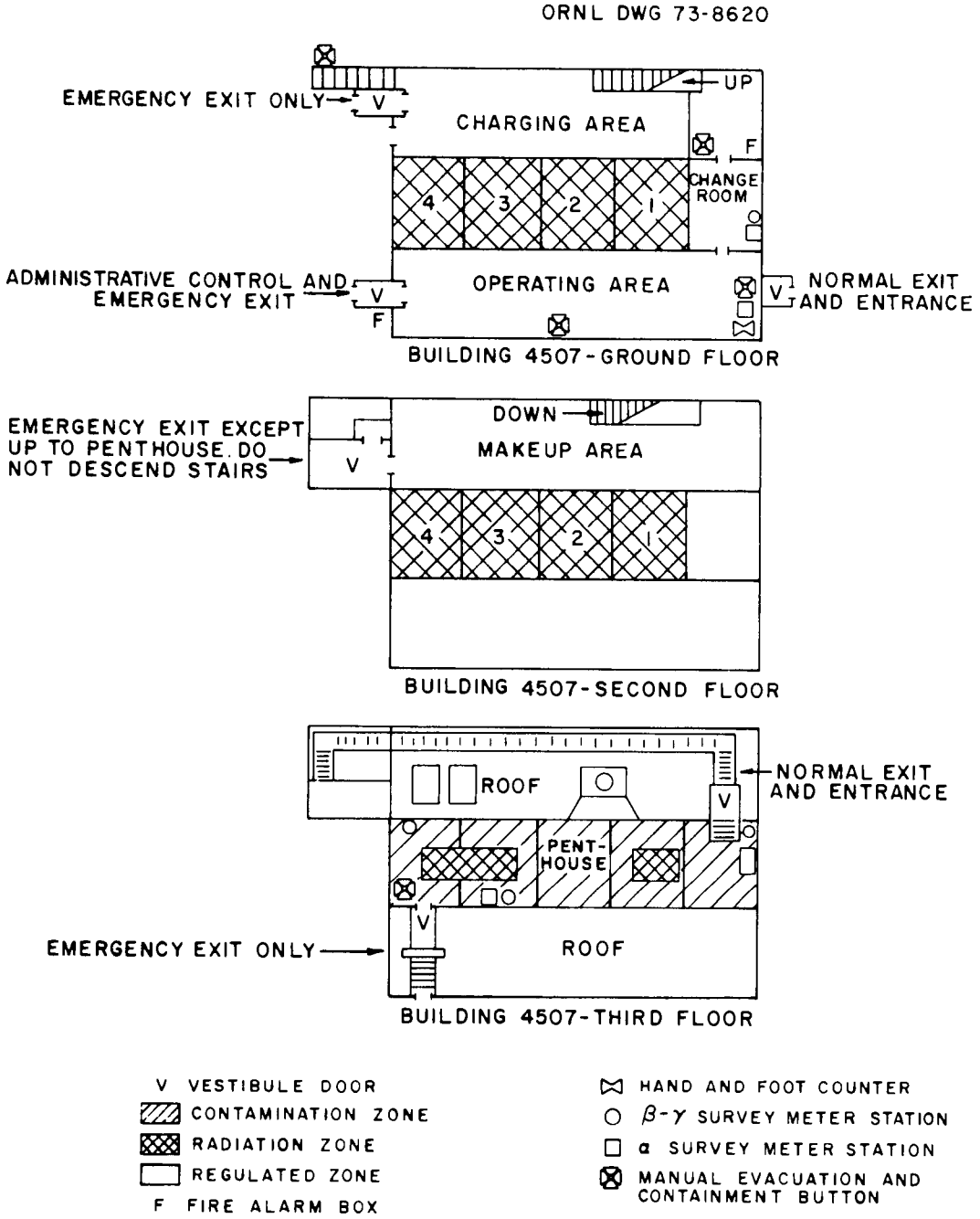

Fig. 1. Building 4507 Zoning Areas.

A-1 (Continued)

e. Appoint sentries for east and west ends of building to prevent unauthorized entry.

f. Appoint searcher and HP surveyor, dressed in protective clothing, to enter building and evacuate anyone remaining there and to assist the persons waiting near the area where the release occurred.

7. Emergency equipment and protective clothing is stored in passageway between Bldg. 4507 and 4500.

PROCEDURE A-2 Date Revised: June 1975

HIGH RADIATION LEVEL CHEMICAL DEVELOPMENT FACILITY - BLDG. 4507

Other Emergencies

1. Emergencies requiring medical assistance, guards, etc., should be reported by telephone using the emergency telephone number posted beside each telephone (3-6358).

Emergency Telephone Numbers

Emergency Control Center	3-6358
Ambulance	3-6358
Fire	3-6358
Guard Headquarters	3-6646
Laboratory Shift Supervisor	3-6606
Health Physics	3-1692

2. Emergency Shutdown of Electrical Equipment - Each person responsible for the operation of any cell in the building shall determine the location of all cut-offs for building services supplying his cell with the assistance of the building supervisor, and shall inform his operating personnel of these locations by including them in his written procedures. Briefly, steam, water, air, and gas may be cut off in the Bldg. 4505 cold tunnel; local electric power at Power Panels X and Y (Fig. 2), and Lighting Panel "A" in the charging area; Lighting Panels "B" and "C" in operating area; vacuum in the Makeup Area. The main Bldg. 4507 480 V, 3Ø electric power shut-off is a labeled 400 ampere circuit breaker located on a "Square D" panel in the southeast sector of the basement of Bldg. 4501, 15 ft NW of the double doors leading into the basement of Bldg. 4505; it may be reached by going down the stairway at the west entrance of Bldg. 4505, down the NE stairwell of 4501, or through the tunnel connecting 4500

ORNL DWG 73-8616RI

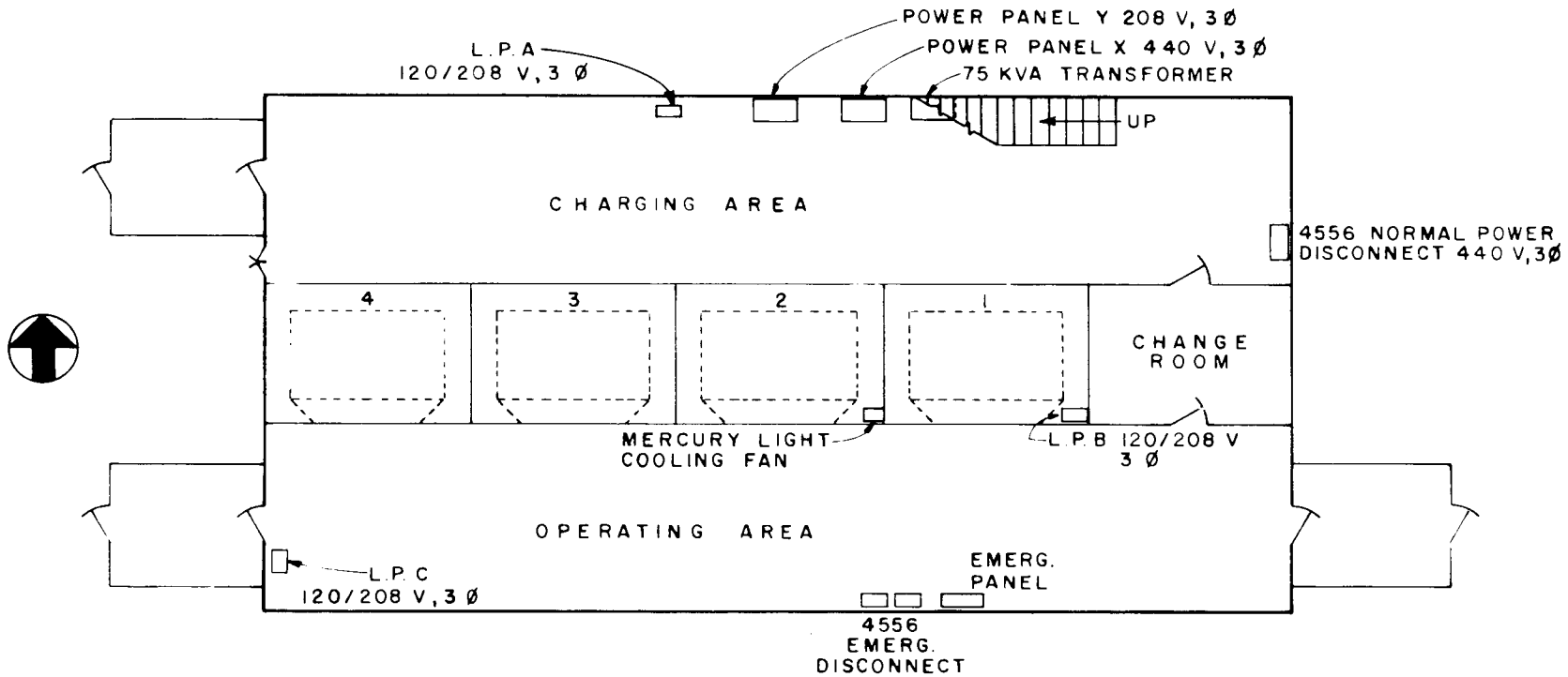

Fig. 2. Location of Electrical Supply Panels in Building 4507.

A-2 (Continued)

and 4556. The main electrical (480V, 3Ø) disconnect to the heater and lights in Bldg. 4556 Blower and Filter Facility is on the east wall of the Charging Area next to containment horn controls; the Bldg. 4556 ventilation fan normal and emergency power disconnects (2) are located on the south wall of the Operating Area near the Emergency Power Panel. (Bldg. 4556 is located about 60 feet west of Bldg. 4507, see page 63 ff).

3. Laboratory-Wide Evacuation - Shut down equipment and put building in containment. Evacuate as directed by P. A. system.

PROCEDURE A-3 Date Revised: June 1975

HIGH RADIATION LEVEL CHEMICAL DEVELOPMENT FACILITY - BLDG. 4507

General Emergency Procedures

General emergency procedures are listed below. Specifically, the procedures are reinforced with competent and well-trained personnel, a technical supervisor for each shift, extensive HP coverage during the startup period, and heavy investment in detection instruments and automatic controls. Fail-safe conditions are specified whenever they apply.

Every individual must be aware of the situation and be prepared to take immediate action at anytime to:

1. Minimize the hazard to personnel both within the plant area and within Bldg. 4507.
2. Minimize the extent of the damage due to or resulting from the incident.

It is up to the building supervisor or the Shift Supervisor, in his absence, to determine the extent of the damage and the best course of action.

Certain procedures can be typical of emergencies within Bldg. 4507. These are listed below.

PROCEDURE A-3.1 Date Revised: June 1975

HIGH RADIATION LEVEL CHEMICAL DEVELOPMENT FACILITY - BLDG. 4507

Loss of Cell Off-Gas or Vessel Off-Gas Duct Vacuum

Building 4507 depends on the Bldg. 4556 blowers and on the plant cell off-gas (COG) system for all of its vacuum and ventilation. A test of the overall plant containment system demonstrated the capability of the containment features of Bldg. 4507 under normal duct vacuum and under reduced duct vacuum (steam turbine operation). Should both the normal and standby plant COG systems fail, the blowers in Bldg. 4556 would stop, leaving Bldg. 4507 without ventilation. Some slight draft could still be obtained from the 3039 stack at the Isotopes Area; it is necessary to put the building into containment, seal the cell air intakes on all hot cells (glove boxes included), open the manual by-pass in Bldg. 4556, and close any cell access or penetrations for the duration of low COG duct vacuum.

VOG duct failures are less hazardous; however, steps should be taken to minimize air flow into the tanks if the VOG system suffers a breakdown.

Loss of COG or VOG Duct Vacuum Emergency Check List

Loss of COG

1. Put the building into containment. See Procedure B-1.
2. Seal the cell air intakes on all hot cell (glove boxes included).
3. Close any cell access ports or penetrations.
4. Open manual by-pass in Bldg. 4556.
5. Evacuate the building unless critical shutdown procedures are in effect.
6. Reentry procedures are discussed in A-1 and A-3.2.
7. See Appendix G (page 62) for procedures to start fans in Bldg. 4556.

PROCEDURE A-3.2 Date Revised: June 1975

HIGH RADIATION LEVEL CHEMICAL DEVELOPMENT FACILITY - BLDG. 4507

Loss of Normal Electrical Power

A loss of electrical power for Bldg. 4507 will cause the building to enter the "fail safe" containment condition. Specifically, shutoff of the main breaker in Bldg. 4501 basement, shut off of circuit 2 in power panel "Y" (Charging Area, 4507) or circuits 11 and 12 in Lighting Panel "C" (Operating Area 4507) will cause this containment condition.

There are several effects that are likely to accompany a general power failure (e.g., power outage due to severe electrical storm) in addition to the building being put into containment. These include numerous HP instrument alarms and alarm conditions for the telealarm systems or knockout of the telealarm relays used for all building vacuum and process alarms. All electrical process equipment will of course be off, forcing shutdown of all process operations immediately. Lapp pumps and circulating pumps using panelboard switches would remain off when power was restored. A containment condition caused by a power failure should initially be treated as one caused by an activity release unless the COG and VOG are operating properly. (The Bldg. 4556 blowers are designed to switch to emergency power in case of failure of the normal system.) The normal procedure would be to quickly examine the cell pressure panelboard to determine that the COG duct vacuum is greater than 1 in. w.g. vacuum and that the VOG controllers in cells 1, 3, and 4 were operating properly. If all is in order, then the hazard to personnel is minimal and immediate steps should be taken to minimize the hazard to the process and equipment. Cell vacuums may be temporarily boosted at the expense of the building by partially blocking the absolute filters on the back cell doors.

A-3.2 (Continued)

If both the COG (Bldg. 4556 and 3039 stack) and VOG systems fail, then the hazard potential to personnel is great, and personnel should manually put 4507 into containment and immediately evacuate the building. Reentry should be made by a searcher, with normal reentry precautions, to check if the building off-gas systems are functioning properly on the normal or emergency off-gas system. If the COG and/or VOG systems are not operating satisfactorily, the cell vacuums should be boosted by sealing the air intake filters on the doors and on the penthouse glove boxes. The filter bypass valve in Bldg. 4556 should be opened manually to increase the available vacuum. All process and building alarms should then be cleared, if possible, all HP instruments reset, and all electrical process equipment should be turned off. The personnel making the building entry will be charged with deciding whether there are any additional potential hazards caused by the power outage and forced shutdown that can be alleviated by further activities in the building at that time. If not, the building should remain empty and in containment until electrical power is restored.

Reentry should be made cautiously and with aid of HP when power is restored. As soon as building is cleared for normal activities, the building can be taken out of containment by pushing the containment reset button and starting the penthouse exhaust fan (only for summer operation) and the Cell 1-2 mercury light cooling fan. A systematic checkout should be begun to find faulty telealarm relays, burned out bulbs, blown fuses, kicked-out heaters, etc. Normal process operations should not be resumed until this checkout is complete.

Loss of Electrical Power to Building 4507 Checklist

1. A loss of electrical power will cause the building to go into containment.
2. Examine cell pressure panelboard to determine that the COG duct vacuum was greater than 1 in. W.G. vacuum and that VOG controllers in cells are

A-3.2 (Continued)

operating properly, then proceed to item 3. If the VOG and COG systems fail, see "Loss of COG or VOG Duct Vacuum."

3. Turn off all electrical process equipment.
4. Close bottom valves under head tanks in Makeup Area to prevent syphoning.
5. Reset all HP instruments; clear all process and building alarms if possible.
6. Evaluate whether there are any additional potential hazards caused by the power outage that can be alleviated by further activities in the building.
7. Evacuate the building.
8. Reentry procedure is described in Procedures A-1 and A-3.2.
9. As soon as the building is cleared for normal activities, push containment reset button and start penthouse exhaust fan (for summer operation only) and reset and start Cell 1-2 mercury light cooling fan.
10. Start systematic checkout; check telealarm replays, light bulbs, fuses, heaters, etc.

PROCEDURE A-3.3 Date Revised: June 1975

HIGH RADIATION LEVEL CHEMICAL DEVELOPMENT FACILITY - BLDG. 4507

Loss of Building Air Supply

Loss of the building air supply would cause the pneumatic instruments to be out of service. No air-operated valves could be changed, causing loss of process flexibility. The air-to-open ventilation inlets would close, putting the building into containment. Any air-operated in-cell transfer jets could not be operated. Liquid level and density measuring instruments would fail. Loss of air purge during aluminum or stainless steel dissolutions could allow buildup of dangerous quantities of H_2 gas in the dissolver if dissolution were not terminated by dilution and cooling when purge was lost.

All systems depending on air pressure should be in operable conditions as soon as the air supply is restored, provided they were operating properly before the loss of air and no changes in valve setting, etc. were made during the air supply shutdown. A check should be made.

Loss of Building Air Supply Checklist

1. Leave tanks closed (no air venting).
2. Turn off liquid to the scrubbers.
3. When air supply is restored, system should be in operable condition.
4. Check all systems using air pressure.

Loss of Other Services

Steam and water services are critical only during extended shutdowns. Loss of steam would result in no way of emptying the T-30 pit sump and in possible freezing of pipes in winter. Loss of cooling water could result in failure of condensers, heat exchangers, and cooling coils. Means could be devised to circumvent these possibilities, if necessary, in the time allowed.

PROCEDURE A-3.5 Date Revised: June 1975

HIGH RADIATION LEVEL CHEMICAL DEVELOPMENT FACILITY - BLDG. 4507

Non-Liquid-Metal Fire in the Cells

One of the most hazardous credible accidents is a fire in a cell; this event has been discussed in ORNL-CF-73-9-4. Immediate actions would be:

1. Turn on the manually-operated fog spray in the cell.
2. Turn off all the feed pumps (front panelboard).
3. Send someone to pull the fire alarm or call 3-6358 and report the fire.
4. Alert stack area - Call 3-6234.
5. Send someone to cover the air inlets to the cell.
6. Jet water from floor of cell and pit to prevent flotation of the tanks.
7. Close bottom valves on head tanks in make-up area.
8. Evacuate the building of people not needed to combat the emergency. Have a gas mask within instant reach of each person remaining in the building. (LOCATED IN EACH AIRLOCK.)

PROCEDURE A-3.6 Date Revised: June 1975

HIGH RADIATION LEVEL CHEMICAL DEVELOPMENT FACILITY - BLDG. 4507

Sodium or NaK Fire in the Cells

DO NOT TURN ON THE FOG SPRAY!

All operations involving sodium or NaK will follow the procedures of Appendix D, ORNL-CF-73-9-4. Non-essential combustible materials will be removed from the cell and all water lines into the cell will be tagged "Do Not Operate." The recommended fire extinguishing equipment must be provided: these include argon gas piped into the cell, and a supply of powdered graphite and/or Met-L-X or Pyrene-G1 powder inside the cell, and a larger dry powder extinguisher of similar type piped into the cell.

Checklist for Sodium or NaK Fires

1. Allow very small fires or droplets, which obviously will cause no harm, to burn out after moving manipulators out of the way.
2. Snuff out small fires with argon cover gas. Keep graphite or Met-L-X supply handy. Cover burning material thoroughly, if necessary.
3. Notify supervision at once if fire appears to gain momentum.
4. Use large dry powder extinguisher.

PROCEDURE B-1 Date Revised: June 1975

HIGH RADIATION LEVEL CHEMICAL DEVELOPMENT FACILITY - BLDG. 4507

To Manually Place Building into Containment

1. Push Manual Contain button on control panel in Operating Area.
2. Silence horns and bells by pushing Silence Klaxon button on panel.
3. Silence Emergency Ventilation and 1st Level Dampers buzzers.

PROCEDURE B-2 Date Revised: June 1975

HIGH RADIATION LEVEL CHEMICAL DEVELOPMENT FACILITY - BLDG. 4507

To Remove Building from Manual Containment

1. Push Manual Contain Reset button on control panel.

2. Restart blower in Penthouse (summer only).

PROCEDURE B-3 Date Revised: June 1975

HIGH RADIATION LEVEL CHEMICAL DEVELOPMENT FACILITY - BLDG. 4507

To Work on 4507 Emergency Power System or Containment System

1. Notify Guard Headquarters (3-6646) of intent to disable containment system.
2. Disable containment system with key switch.
3. Silence containment horns and bells.
4. Perform necessary work or restore Emergency Power.
5. Clear up HP and/or containment instruments, and check function lights at central panel.
6. Call Guard Headquarters and notify of intent to reactivate system.
7. Reactivate system with disabling key.
8. Reset containment system by pushing reset buttons.

PROCEDURE B-4 Date Revised: June 1975

HIGH RADIATION LEVEL CHEMICAL DEVELOPMENT FACILITY - BLDG. 4507

To Reset Evacuation Alarm Horns

1. Shut off all four nitrogen cylinders in Charging Area.
2. Push in both slide valves on solenoid valves on evacuation horns - one (No. 1) on east wall of Charging Area and one (No. 2) on east wall of penthouse.
3. Open the two full nitrogen supply cylinders to system; one of each pair.
4. Replace the two empty nitrogen supply cylinders.
5. Have HP survey empty cylinders, "green tag" them, place in rack outside building.
6. Order two replacement cylinders of nitrogen from General Stores (3-6476) and have the empty cylinders returned to Stores.
7. Check HORN TROUBLE lights on central control panel; they should not be burning. A pressure switch signals "horn trouble" when the cylinder pressure is less than 1000 psig. (Other pressure switches indicate Low Line Pressure at 80 psig, High Line Pressure at 120 psig; Normal Line Pressure is 100 psig.)

Procedure B-13 Date Revised: June 1975

HIGH RADIATION LEVEL CHEMICAL DEVELOPMENT FACILITY - BLDG. 4507

Loading Fuel into or Out of Hot Garden

1. Get supervisor's approval for planned move. Indicate the quantity of fissile material that will be involved in the transfer. At least two technicians will be required. Check with other operating groups to see whether a conflict may exist. Secure supply of liquid Ajax, cheesecloth, masking tape, large plastic carrier bags, nylon cord, rubber gloves, etc.
2. Arrange to meet Applied Health Physicist from 3500 Area and the riggers at the Hot Garden. Phone:

Bldg. 3508 HP	3-1459
Bldg. 3550 HP	3-6581
Bldg. 3525 HP	3-1259
Bldg. 4500N HP	3-6997
Rigger Office	3-6430

3. Have riggers pick up transfer cask at storage point. (See B-25 thru B-32.)
4. Move cask to Hot Garden. Unlock and open gate nearest to the storage well.
5. Remove cover from storage well; place it upside down on a plastic bag or blotter paper.
6. Position cask over open storage well. Carefully remove plastic containment bag and place it in a hot waste container or plastic trash bag for removal at end of job.
7. For removal of fuel from storage, open bottom drawer of cask and drop nylon cord through the top string hole. This may contaminate the cord. Wearing rubber gloves, securely tie the new cord to the cord or cable attached to the storage container. Lower the cask to the top of the storage well. Pull the fuel storage container into the cask while gathering the extra cord into a gloved hand. Close and secure the bottom drawer

B-13 (Continued)

of the cask. Lower the container onto the drawer. Cut off all but about 6-in. of the excess string and dispose of it by folding the rubber glove over the gathered string, then placing it in a plastic bag or hot can. Tape or tie the short end to the top of the cask.

8. To place fuel into Hot Garden, tie a long (about 10-15 ft) length of nylon cord to the cord in the top of the cask (as in 7). Lower cask to the top of the storage well. Raise the fuel container off of the drawer of the cask, and open the drawer. Gently lower the storage container into the well. When the bottom is reached, have the cask raised enough to reach under and grasp the cord with a gloved hand (POSSIBLE CONTAMINATION!). Cut the cord from the spool. Tie the cord attached to the fuel container to the rings on the inside of the well or to a nearby cover.
9. Close and secure the bottom drawer of the cask.
10. Slip a clean plastic bag over the cask and tape it in place. Move the cask away from the storage well and replace the well cover.
11. Have Health Physicist survey the cask. Clean if necessary.
12. Have Health Physicist prepare a Radioactive Materials Transfer Tag (UCN-2785).
13. Notify the receiver - if different group - that the cask will be moved to their location.
14. Have Health Physicist survey work area for contamination. Clean if necessary.
15. Pick up all trash and waste and place it in sealed plastic bags in a "hot dumpster".
16. Close and lock gates to Hot Garden.

PROCEDURE B-14 Date Revised: June 1975

HIGH RADIATION LEVEL CHEMICAL DEVELOPMENT FACILITY - BLDG. 4507

Gantry Crane Operation

The gantry crane in the Penthouse of Bldg. 4507 moves on tracks from a position over Cell 1 at the east end of the Penthouse (its normal storage area) westward over the other three cells, and out through a large overhead door to a position over a motor vehicle located outside of the west end of the building. The main crane is a 10-ton capacity bridge crane that covers the area over each cell between the tracks; a smaller, one-ton auxiliary crane is mounted on a beam on the west end of the gantry structure and serves the same areas as the 10-ton crane. Each crane has two speeds of operation, controlled by push-buttons on pendant control boxes. The spring-loaded buttons must be held down to operate the cranes.

1. Before attempting to operate the crane make sure that the tracks are clear of all obstructions and that the hooks are raised so that they will not hit anything.
2. The main power disconnect is the switch box located under the personnel exit stairway in the northeast corner of the Penthouse. The secondary local power disconnect is located on the south side of the gantry crane framework. The normal power on-off switch for the 10-ton crane is on the suspended 8-button control box hanging from the southeast corner of the bridge. The controls for the one-ton crane are suspended from the south leg of the bridge.
3. Never wear contaminated gloves while operating the crane.
4. Press red button labled "on." This will cause a bell to ring. Silence the warning bell by pushing the switch on the south leg of the framework. Check again for people or objects on the tracks before moving the crane.

B-14 (Continued)

5. The directions of movement are clearly labeled on the controls.

6. Check inspection date of crane cable and of lifting cables (chokers). Never use cables having rated capacity of less than the weight of the cask. Use matched pairs of chokers.

7. If the crane is to be operated outside the Penthouse, be sure that the large door is fully opened (see Procedure B-15). DO NOT CONFUSE THE RED EVACUATION ALARM BUTTON WITH THE DOOR CONTROLS. Carefully remove guard rail, if necessary, for large objects.

8. Always leave the crane hook in the fully-retracted (up) position, and the gantry in its storage position.

9. Never go off and leave objects suspended from the crane.

10. Shut power off at the suspended control boxes after using.

11. Never allow objects to swing like a pendulum. This can be overcome with practice.

12. Replace the guard rail on the west end if it was removed to permit large objects to be brought into the Penthouse.

13. The one-ton auxiliary crane projects beyond the west end of the ten-ton gantry crane framework. Avoid hitting the large door when moving the gantry in a westward direction or over Cell 4. (Other potential collision spots are the Maintenance Box over Cells 3 and 4 and the Cave over Cell 1.)

14. Malfunctions:

    a. Notify Building Supervisor at once if the crane does not operate properly in any way.

    b. If he is not present, call P&E Division Foreman for Bldg. 4507 and/or the Area Engineer for Bldg. 4507 and notify them of the problem and of its urgency.

B-14 (Continued)

c. In an emergency, e.g., the crane fails to function when located outside the west end of the Penthouse, it may be possible to close the overhead door and leave the crane temporarily out-of-doors.

PROCEDURE B-15 Date Revised: June 1975

HIGH RADIATION LEVEL CHEMICAL DEVELOPMENT FACILITY - BLDG. 4507

Penthouse Overhead Door Operation

The electrical controls for the large overhead door on the west end of the Bldg. 4507 Penthouse are located in the southwest corner of the room near the Emergency Exit door and above the emergency exhaust duct opening. The door controls must not be confused with the red EMERGENCY EVACUATION BUTTON located inside a lucite plastic box in the same general area! Accidental pushing of the evacuation button will sound the nitrogen-powered evacuation horns in 4507 and will summon the Laboratory Emergency Forces to the building.

The main ON-OFF disconnect for the door is in the white switch box on the south wall in the southwest corner of the Penthouse. The box is located about six feet above the floor on the wall panel above the ventilation duct grill. The main switch turned to the left position is OFF, and turned to the right is ON.

Directly below the main switch box are the three button controls: OPEN, CLOSE, and STOP. OPEN opens the door fully, CLOSE closes the door fully, STOP holds the door partially open. A trip-wire in the rubber seal on the bottom of the door reopens the door if it touches something while it closes.

1. Get Building Supervisor's approval before opening the overhead door. Check with other operating groups for possible conflicts.
2. Turn main disconnect switch to right to ON position.
3. Push OPEN button to open door.
4. Push STOP button if partial opening is desired.
5. Check to see if door is fully open before moving gantry crane out of building.

B-15 (Continued)

6. Push CLOSE button to reclose the door.
7. Turn main switch to left to OFF position when finished.
8. If door malfunctions notify Building Supervisor, or Area Engineer, or P&E Foreman immediately.
9. A chain-operated mechanism hangs outside the building at the south end of the door housing. This may be used in an emergency to manually open or close the door.

PROCEDURE B-16 Date Revised: June 1975

HIGH RADIATION LEVEL CHEMICAL DEVELOPMENT FACILITY - Bldg. 4507

Loading Fuel Into and Out of Bldg. 4507

1. Get Supervisor's approval for planned move. Notify him of the quantity of fissionable material involved in the movement. Clothing requirements are posted on Penthouse door.
2. Open Penthouse door (B-15).
3. See procedure on gantry crane operation (B-14).
4. Bring carrier up into the Penthouse and move to desired location.
5. Place clean blotter paper on the floor under the carrier.
6. Shut Penthouse door.
7. Have Health Physicist present at time of operation of loading fuel into or out of a cell.
8. Suspend carrier over desired access hole to cell over clean blotter paper which has a properly-sized hole in it. Carefully remove plastic containment bag from cask; place in waste can. Lower cask to floor.
11. Attach waxed string, nylon cord, or steel cable to cable or cord on fuel can. Open hole into cell and lift the fuel can, and open the bottom drawer of cask. Lower fuel into the cell. Drop the string or cable into the cell; do not pull it back into the Penthouse. (See Procedure B-15 and B-20.)
12. Close carrier drawer and access hole and have Health Physicist monitor for contamination. Clean, if necessary, by wiping with detergent solution.
13. Raise carrier 2-3 feet and place new plastic bag over it. Have Health Physicist prepare transfer tag for carrier. Dispose of blotter paper, bags, strings, gloves, etc. Move cask to storage area.

B-16 (Continued)

14. Have Health Physicist probe and smear floor and surrounding area for contamination. Clean at once if any contamination is found.

15. Use approximately the reverse procedure for removing fuel containers from cell. Use rubber gloves to handle lifting string or cable. Gather the cord into the gloved hand to minimize the spread of possible loose contamination; then fold over the glove to envelope the string, and discard in waste can (see B-18, Sample Removal Procedure).

PROCEDURE B-17 Date Revised: June 1975

HIGH RADIATION LEVEL CHEMICAL DEVELOPMENT FACILITY - BLDG. 4507

Preparation of Sample Containers

1. Select a 32-oz. (4-7/16 x 4-7/16-in.) squat clear polystyrene jar, with black coated lined rolled edge metal style B screw closure (cap) having a continuous thread (see Requisition N-1264 dated 4/6/71) from the supply in Bldg. 4507.
2. Secure a 1-in. dia eye-bolt, a flat washer, a lock washer, and a 1/4-20 nut from General Stores.
3. Locate the center of the metal lid, and make a 1/4-in. dia hole down into the lid using a center punch. Securely tighten the eye-bolt into the top of the lid.
4. Wrap the lower part of the jar in sheet polyethylene or a polyethylene bag. Tightly fold the plastic over the jar and fasten with a strip of 2-in. wide masking tape, which has a thickly folded tab at the free end. (The tab is to be grasped with the manipulator tongs in the cell to pull it back and thus remove the protective plastic from the jar. Sometimes a 1/2 x 2-in. piece of cardboard helps thicken the tab to make it easier to hold.)
5. Loosely screw the lid onto the jar prior to use; a tightly fastened lid is impossible to remove with manipulators.
6. Tie a string to the eye-bolt to lower the jar into the cell.

PROCEDURE B-18 Date Revised: June 1975

HIGH RADIATION LEVEL CHEMICAL DEVELOPMENT FACILITY - BLDG. 4507

Removal of Beta-Gamma Samples from Cells 1 and 2

1. Usually two operating people are required for sample removal - one in the Penthouse and one in the Operating Area. Call Health Physics surveyor; he must be present when samples are removed. Get supervisor's approval. Check with other operating groups for possible conflicts. Clothing requirements are specified on Penthouse door.
2. See procedure for crane operation (B-14), overhead door operation, (B-15), preparation of sample containers (B-17), and sample port operation (B-19).
3. High-level beta-gamma samples from Cell 1 should be transferred into Cell 2 for removal. See Procedure B-15 for Sample Carrier operation.
4. A clean plastic sample container is chosen and is wrapped in plastic and taped - making sure that the plastic wrapping can be easily removed in the cell by pulling tabs of tape with the manipulators (Procedure B-17).
5. Cut a 6-in. diam hole in the center of a piece of blotter paper. Place over 6-in. access hole atop Cell 2.
6. Unwrap the sample carrier and place it over the 6-in. hole lowering it to within 2 or 3 ft of the surface of the cell. Open the bottom drawer of the cask. Feed a string through the hole in top of the carrier until it appears at the bottom. Wearing rubber gloves, tie the sample container or weight to the string and place the carrier on the floor over the hole. (There is a high probability that the end of the string is contaminated!) Open the access hole into the cell.
7. Lower the container into the cell by the string (about 15-20 ft required) attached to the lid.

B-18 (Continued)

8. Have person in Operating Area load samples into the container. Raise the container off the floor, and while suspended strip off the protective plastic wrapper. Pull the container up into the sample carrier, using rubber gloves since the string is contaminated! Gather the string into the gloved hand as it is pulled up, then fold the glove over the string, and place in bag and hot can after cutting off excess. Tape end of string to cask.
9. Close the carrier drawer and secure with a bolt. Have Health Physicist survey the cask. Clean the cask if necessary with liquid detergent and cheesecloth.
10. Wrap cask in a clean plastic bag and have Health Physicist prepare transfer tag.
11. Lower cask into the box on the back of the sample truck, and deliver to High-Radiation Level Analytical Laboratory at Bldg. 2026.
12. Position back of sample truck under their crane for unloading (north side of Bldg. 2026).
13. Deliver Analytical Request forms to Bldg. 2026 Supervisor and notify him the samples are outside.
14. Assist in unloading the carrier from the sample truck.

PROCEDURE B-19 Date Revised: June 1975

HIGH RADIATION LEVEL CHEMICAL DEVELOPMENT FACILITY - BLDG. 4507

Use of Six-Inch Diameter Sample Port on Cell 2

1. Plan desired move with the building supervisor and check with other operating groups.
2. Have Health Physicist present at time of operations. Observe clothing requirements.
3. See procedures B-14 thru B-18. (See B-25 thru B-32 for carriers.)
4. Remove the metal cover plate from the 6-in. dia hole; place on blotter paper.
5. Secure a piece of blotter paper long enough to cover the floor under the carrier; cut a hole in the center of it about the size of the port.
6. Place the desired carrier over the hole making sure that it is centered.
7. Open the slide valve in the hole using the "T" shaped tool provided.
8. Proceed with the desired operation.
9. Close the slide valve.
10. Raise the carrier about two feet and have Health Physicist check for contamination. Clean if necessary.
11. Wrap carrier in a plastic bag and have Health Physicist prepare Transfer Tag.
12. Remove the blotter paper from the floor by folding or rolling it so as not to spread possible contamination. Replace the metal cover plate on the access hole.
13. Place all trash in contamination garbage cans.

PROCEDURE B-20 Date Revised: June 1975

HIGH RADIATION LEVEL CHEMICAL DEVELOPMENT FACILITY - BLDG. 4507

Use of Fourteen-Inch Port in Cell 2

The 14-in. dia port in the roof of Cell 2 contains a nominal 14-in. dia ball valve (Actual inside diameter = 13 inches) operated by an electric gearmotor and angle drive. Objects to be inserted or removed should never measure more than 12 inches in the longest dimension. The valve is located just above the cell ceiling, and may be shielded with a 36-in. long concrete plug. Normally, the ball is kept closed and a bolted metal cover plate is used in the Penthouse.

1. Coordinate move with Health Physicist, other operating groups, and the Building Supervisor. Clothing requirements are posted on Penthouse door.
2. Remove cover from port and place upside down on blotter paper.
3. Secure a piece(s) of blotter paper large enough to cover the opening and floor under the carrier. Cut a 14-in. dia hole in the center of the paper.
4. See procedure on gantry crane operation (B-14) and B-25 through B-32 for carriers.
5. Move cask to position over Cell 2.
6. Lower the carrier over the 14-in. opening, making sure it is centered over the hole.
7. Plug in the electric motor using the cable reel on the north ledge and turn switches to "Open." Watch for the indicator light to come on to indicate the hole is fully opened. Put toggle switch in center, neutral position. Proceed with operation.

B-20 (Continued)

8. After completing the operation, turn switch to "Close." Watch for the indicator light. Turn switch to "off" and unplug electric motor. Replace cord on reel.
9. Raise the carrier two feet and have Health Physicist monitor. Clean, if necessary, and cover with a plastic bag. Have Health Physicist prepare Transfer Tag.
10. Carefully remove blotter paper and place in contaminated waste can.
11. Replace cover over the port and have Health Physicist monitor floor; clean if necessary.

PROCEDURE B-21 Date Revised: June 1975

HIGH RADIATION LEVEL CHEMICAL DEVELOPMENT FACILITY - BLDG. 4507

Replacing Gloves on Glove Boxes

1. Make sure the glove box in the operation has sufficient vacuum. Tape a plastic bag under the glove port and place blotter paper on floor under the ports. Check new gloves for leaks by trapping air and rolling toward hand.
2. Remove the outer O-ring. Roll the inner O-ring back toward the glove box. Slide the rolled portion of the old glove into the outer O-ring groove on the glove port flange.
3. Place new glove all the way onto the port, over the old glove, and secure it with the inner O-ring in the inner groove of the port. Be sure that the glove is positioned with the thumb side up.
4. Hold the new glove on the outside and using an adjacent glove, carefully work the old glove out from under the new one and pull it into glove box.
5. Replace the outer O-ring on the new glove.
6. Have a Health Physicist probe and smear the area for possible contamination. Clean if necessary.
7. Monitor your own hands and clothing.

PROCEDURE B-22 Date Revised: June 1975

HIGH RADIATION LEVEL CHEMICAL DEVELOPMENT FACILITY - BLDG. 4507

Procedure for Bagout Operations

Purpose

The purpose of bag-out operations is to transfer material into or out of a glove box, cell, or cave into another container or area without significant release of contamination.

Preparation

Material to be removed from a cell or glove box requires adequate preparation depending on its form. The primary objective is to prevent cutting or rupturing the bag by the objects being removed. Glass and other small, pointed or sharp objects must be placed in another container (ice cream containers, paint cans, or lard cans) while still in the glove box. Larger equipment and materials with sharp points should have the stress points covered or be placed in other very large containers attached to the bag port; e.g., 55 gal steel drums or wooden boxes. These attached containers should be provided with a filtered off-gas connection to the glove box for the final separation and placing of the container lid without pressurization of the sealed contents. All materials removed should be doubly-contained.

Be sure the glove box has proper vacuum before proceeding.

Materials that have been prepared for removal should be monitored by a Health Physics surveyor prior to removal to ensure against an over-exposure to persons performing the operation. The HP surveyor should determine and recommend whether the radiation level of the material is high enough to require shielding. A Radiation Work Permit should be prepared by supervision if necessary.

B-22 (Continued)

Protective personal equipment required for bag-out operations may vary from one glove box to another depending on the material to be removed. In some instances gas masks and two layers of "C" zone clothing are required, while other areas may require only minimal dress requirements. The building supervisor will decide, based on the recommendation of the Health Physicist, the clothing required for each removal.

Procedures for 8-in. or 12-in. Bag Ports

Generally each time a quantity of material (other than several small samples) is to be removed from the glove box a length of plastic bag has to be placed on the glove box. There may be more than one procedure for doing this; however, only one will be described here. The objective of a bag-out is to prevent the atmosphere of the glove box from coming in contact with the atmosphere outside the contained area. The first step is to withdraw enough bag from the supply roll to properly complete the operation. Polyethylene tubing for bag fabrication is carried in General Stores (Bldg. 7000) under the following item numbers:

6-in. dia port	15-282-2000(9-1/2 in. flat)
8-in. dia port	15-282-2010 (13-1/4 in. flat)
12-in. dia port	15-282-2020 (19 in. flat)

The plastic tubing is first visually inspected for tears, holes, or other defects. The bag material thickness should be 4 mil or greater. One end of the tube is sealed with a heat sealer to form a bag. The heat seal is also inspected and tested by attempting to pull the seal apart manually after cooling. The bag is now ready for installation on the flange of the bag-port.

B-22 (Continued)

The manipulator Boot Shop can fabricate heavy (8-mil) wall bags for a 12-in. bag port at a reasonable cost. Dimensions should be 19-in. flat measure by 72-in. long, sealed at one end and along two long sides.

Two O-rings[a] are used to hold the bag onto the mouth of the bag port. The outermost ring, i.e., the one nearest the person doing the bag-out, should be removed and enough new bag slipped over the old one to reach the face of the box. Replace the outer O-ring (over both bags) in the outer groove. Turn back the new bag over the outer O-ring to expose the inner ring. The inner O-ring is now removed or rolled back towards the box to release the old bag. Push the loosened old bag back toward the outer O-ring, and then turn the new bag back over the gathered old bag; replace the inner O-ring in its groove to hold the new bag in place. The outer O-ring may then be removed to free the old bag. While holding the new bag on the outside, the old bag is carefully pulled into the box using the adjacent gloves. After the old bag has been removed, the outer O-ring is replaced in the outer groove to doubly secure the new bag.

The vacuum inside the glove box will suck the plastic bag inside-out toward the interior of the glove box. A good procedure for placing the material in the bag for removal is to reach to the end of the bag with one arm and grasp the material with one hand (have another person place the material in that hand using the gloves in the glove box). The material is pulled toward the outside, which pulls the bag right side out again. The plastic bag should be long enough to allow for ease in sealing.

---

[a]Neoprene or BUNA-N O-rings for bag ports are Stores stock items (Y-12):

8-in. dia port: 07-422-5640 (1/4 x 7-1/2 x 8-in. neoprene)

12-in. dia port: 07-422-1750 (1/4 x 11-1/2 x 12-in. BUNA-N).

B-22 (Continued)

Heat Sealing Bags

The heat seal method is preferred for the 8-in. or 12-in. port bag-out operations. The heat sealer should be tested on scrap plastic from the same roll before bagging-out contaminated materials. Adjustments should be made if necessary to assure proper sealer operation. Place the portion of the bag between the material to be removed and the glove box on the sealing portion of the sealer, making sure all large wrinkles are smoothed out prior to sealing. (Small wrinkles may be sealed by double heating the same portion of bag.)

B-22 (Continued)

The bag and the object in the bag must be supported during the sealing operation to prevent the weight of the object from tearing the bag as it is being fused! The bag is then sealed. After a sufficient seal is made, a cut is carefully made through the middle of the seal with scissors. Have the Health Physicist check the cut ends for contamination. The bag on the glove box is allowed to return to the inside of the glove box slowly, so as not to yank off the bag. The material is then sealed into another plastic bag for extra containment.

If anything does not work properly or if anything goes wrong, place the object back into the glove box and summon assistance.

"Tape and Cut" Sealing Bags

An alternate method for sealing the bag is the so-called "tape and cut" method. In Bldg. 4507, this method is normally selected in advance to allow the seal to be made on a section of essentially clean plastic when removing large items. Because of the proven hazard of the dust in the CRF cells and glove boxes, the tape and cut method will not be used without the provision for a clean section of bagging. If the bag sealer fails to make a satisfactory seal on a normal bag-out, the material will be placed back in the glove box and held there until the bag can be changed to provide the clean surface or the bag sealer is repaired. In no case when using the cut and tape method will the bag on an 8-in. or 12-in. bag port be hand-held or rotated to twist the seal, or otherwise subject the package to a squeezing action which could pressurize the contents even slightly before the second bag is sealed around it. This action could cause contaminated air to be forcibly ejected from the cut ends and spread over the Penthouse areas.

B-22 (Continued)

A length of clean plastic is folded over the bag ring and secured lightly before the old, inner bag is removed. (Some care is required to avoid a premature unfolding of the clean section.) Normal filling operations are carried out. When all the material has been put into the bagged container and as much air as possible expelled from the package, the clean section of plastic is unwrapped and extended. This portion is gathered tightly by hand, between the container and the glove box, and wrapped with 2" wide plastic tape tightly around the gathered bagging for a width of about 6-10 inches in two or three layers. Two pieces of tape are also cut and attached loosely to the coveralls for sealing the cut ends. The bag is then ready to be cut in two in the middle of the wrapped portion. With the Health Physicist standing by, ready to monitor the operation,the cut is started. Test the exposed ends of the gathered bag for contamination; if there is none, proceed with the cutting. The two pieces of plastic tape, prepared previously, are placed on each cut end of the bag and sealed with additional tape wrappings. The severed bag is then placed in another container or bag.

In the event that the cut ends of the gathered bag are contaminated, place them back together and seal them with the pieces of plastic tape. Secure assistance. (One successful solution to this problem is the application of another long, gathered plastic bag or sleeve, containing a sharp knife, around the location of the cut to contain or envelope the operation. The original twisted bag is cut inside the secondary bag; then the clean, gathered portion of the secondary bag is extended and heat-sealed or taped-and-cut.)

PROCEDURE B-23 Date Revised: June 1975

HIGH RADIATION LEVEL CHEMICAL DEVELOPMENT FACILITY - BLDG. 4507

Removal of Large Objects Through Large Ports on Glove Boxes

Large objects, such as tanks, equipment racks, etc., which must be removed from cells or gloveboxes by the use of bag-out methods require special planning and preparation. Plan the removal procedure with the building supervisor and the Health Physics surveyor. They will help specify clothing requirements, make radiation surveys, and may offer some helpful suggestions.

Preparations

1. Call P&E Division Foreman for installation of a plastic containment tent around the large opening.
2. Fabricate a container for the object. It must have a filtered (gas mask canister) vent to provide vacuum in the container. A 55-gal drum, sheet metal box, or double-wall (to protect the bag liner) wooden crate may be used (see 3).
3. Fabricate a heavy (8 mil) plastic bag or sleeve to connect the mouth of the container to the flange of the bag-port. An extra length (about 8-10 ft) of clean bag tubing should be folded back from the open end of the 55-gal drum or wooden box in the initial preparations, and taped or strapped in place. The free plastic end is then attached to the bagout port.
4. If necessary, provide a greased, curved sheetmetal plate or a roller conveyor section on the inside bottom of the drum or box to assist in sliding heavy objects into the container. A short metal "bridge" may be necessary to cross the gap between the bagport and container.
5. A slanted, movable dolly or cart is useful for holding the container at the mouth of the bagport. It permits gravity assistance in loading the container and also may be rolled back to provide room (and clean tubing) to make the separation of the container and glovebox.

B-23 (Continued)

General Procedure

1. Coordinate operations with building supervisor before starting.
2. The 4507 Health Physics surveyor must be present.
3. Dress requirements must be met.
4. Review Procedures B-14, B-15, B-21, and B-22.
5. Have necessary P&E craftsmen present, if needed.
6. Remove sheet metal cover from bagport; place in large plastic bag. Have HP survey cover and port.

Procedure for Installing New Plastic Bag or Sleeve from Container to Bagport

The following steps are to be taken in the sequence given for the installation of a new bag on the large port of a glove box (Fig. 3):

1. Loosen or remove outer band (a).
2. Slip new bag under outer band, leaving sufficient length of bag bunched up between the inner and outer bands to extend to the box under the inner band (b).
3. Clamp the outer band snugly over both bags as shown in (c), making sure no wrinkles are under the new bag. Fold new bag back over the outer band (d).
4. Loosen the inner band.
5. Pull back the old bag and have HP check bag and flange for contamination. If contaminated, bunch up between inner and outer bands. (If not contaminated, see Step 10.)
6. Extend the new bag under inner band, smoothing out any wrinkles (e).
7. Tighten inner band; then loosen outer band.
8. Slip old bag off of flange by pulling gently but firmly into the glove box.
9. Tighten outer band securely to complete operation (f).

ORNL DWG 75-5354

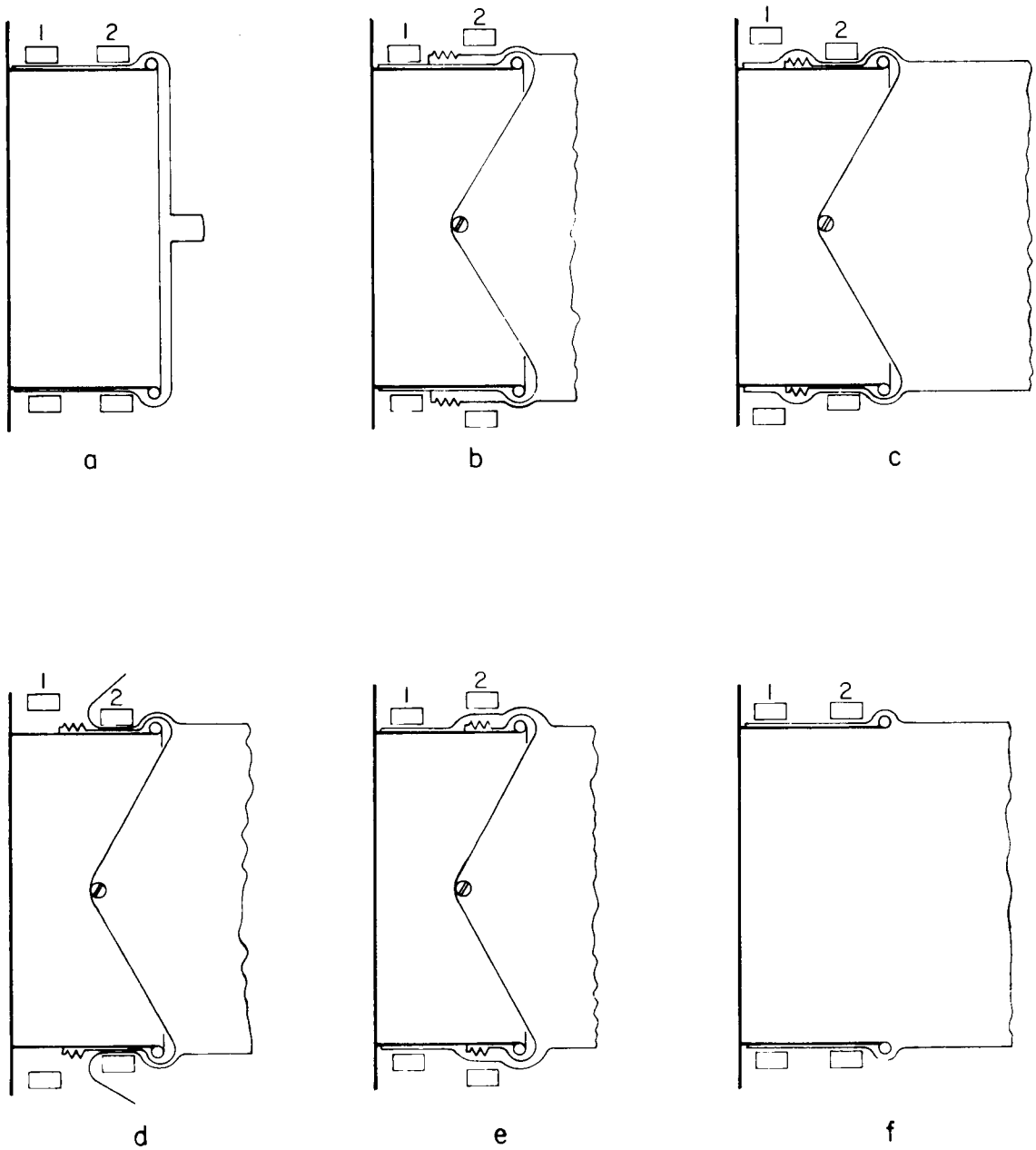

Fig. 3. Procedure for Installing New Plastic Bag on Equipment Removal Cubicle.

10. If old bag or flange are not contaminated, trim end of bag with scissors or knife back to the outer band. Discard into hot can.
11. Resume procedure at step 6.
12. Attach ventilation hose to container.
13. Have HP surveyor monitor working area for contamination.

Procedure for Removal of Large Equipment

1. Place material to be removed in container using adjacent gloveports or manipulators, taking precautions not to puncture or cut the plastic.
2. Roll back container to expose clean plastic tubing, tape gathered portion (Procedure B-22), and cut.
3. Have HP monitor cutting operation and area.
4. Place lid onto container and secure with nails, bolts, etc., and seal the joints with plastic tape.
5. Detach ventilation hose after monitoring. Close the opening into container with pipe plug or cap.
6. Replace sheet metal cover on bagport. Discard bag.
7. Survey container and area. When free of contamination remove from containment "tent".
8. Apply steel strapping to wooden crates.
9. Wrap and seal crate or other container in clean plastic.

PROCEDURE B-24 Date Revised: June 1975

HIGH RADIATION LEVEL CHEMICAL DEVELOPMENT FACILITY - BLDG. 4507

Removal of Manipulators

1. If a manipulator becomes inoperative, discontinue work with both manipulators in the cell. This will permit use of the good hand as a tool in the repair of the broken hand.
2. Call the manipulator repair shop (3-1708) for diagnosis and repair work.
3. Clear the area in front of the cell of desks, chairs and other obstructions. Clear a pathway from the west vestibule.
4. Spread blotter paper along the floor in front of the cell and secure with masking tape; cover an area about 6-8 ft wide and 10-15 ft long.
5. At times the wall of the cell must also be covered. Check with the building supervisor or Health Physics.
6. Have shoe covers, rubber gloves, "C" zone clothing, gas masks, masking tape, and pocket dosimeters available prior to removal. A Health Physics surveyor must monitor the repair or removal operation. Establish a C-zone if necessary in the Operating Area. Prepare a Radiation Work Permit if necessary.
7. In the event a manipulator must be removed from a cell, make sure the craftsmen tape a plastic sleeve to the face of the cell around the manipulator to ensure that containment is never broken (this is their normal procedure).
8. When the repairs have been completed, have the HP Surveyor monitor the work area, tools, personnel, etc.

PROCEDURE B-25 Date Revised: June 1975

HIGH RADIATION LEVEL CHEMICAL DEVELOPMENT FACILITY - BLDG. 4507

Operation of Sample Carrier

The Bldg. 4507 sample carrier is a stainless steel-clad, lead-filled cylinder about 19-in. dia and 20-in. high that weighs 2030 lbs. The cask contains a 6-in. dia by 8-in. tall cavity with a bolted top access plug and a bottom access drawer. The top plug contains a hole through which a string or cord may be passed to lower or raise a container for samples into or out of a hot cell. The top plug is fastened to the body with eight bolts and is generally not removed. The bottom drawer is held closed with a 3/8-in. bolt and its nut; the bolt must be in place before the cask is moved. The cask was fabricated according to DWG-D-34489 and may be used on-site only.

1. Check radioactive materials transfer tag on cask for contamination level. Use discretion and, wearing rubber gloves, clean if highly contaminated on outside.
2. Raise cask with crane and remove plastic containment bag from cask (only in a contamination zone or regulated area) and place in hot can for disposal.
3. Put down blotter paper in work area.
4. Remove drawer bolt and pull open the drawer, noting any difficulty (the cam-follower rollers of the drawer may be corroded and require replacement). Have Health Physicist check top of open drawer; clean if necessary.
5. Drop waxed string or nylon cord through the top hole, out the open drawer, and tie to eyebolt of the sample container. Pull jar into cavity of cask, and shut the drawer.
6. Lower cask onto sample port of cell, centering the cavity over the center of the port.
7. Open sample port (Procedures B-17, -18, -19), open drawer of cask, and lower jar into cell (about 14 feet from floor to work table).

B-25 (Continued)

8. When the samples have been loaded into jar, pull the jar up into the cask with the string. Carefully pull up the string - gather the excess into a gloved hand to minimize the spread of contamination from the string. Hold the jar suspended at the top of the cavity and close the drawer. Lower jar onto top of drawer.

9. Have assistant fasten drawer in closed position with bolt and nut. Close the sample port.

10. Fold glove over excess string to contain it, and cut the string. Throw away glove and string. Leave about 6-in. of extra string protruding from hole; take a short length of masking tape and fasten end of string to top of cask. (This is done so that the jar will come up out of the cask when the lid is raised in the unloading cell at 2026 Anal. Lab.)

11. Have Health Physicist monitor cask for contamination. Clean if necessary.

12. Have Health Physicist prepare transfer tag for cask to go to 2026 lab or other facility.

13. Wrap cask in clean plastic bag.

PROCEDURE B-26 Date Revised: June 1975

HIGH RADIATION LEVEL CHEMICAL DEVELOPMENT FACILITY - BLDG. 4507

Operation of Contaminated Scrap Carrier

The contaminated scrap carrier is a stainless steel-clad, lead-filled cylinder about 34-in. tall and 23-in. dia, and has a 28-in. square base containing two rolling drawers that may be unbolted and opened to expose a 14-in. dia x 24-in. tall cavity. A helix string hole through the removable top permits a cord or cable to be passed down through the cavity and open drawers into the hot cell. The usual trash or scrap container is a 10 in. dia x 14-in. tall leak-proof lard can with bale and lid (Stores Item No. 02-085-3280). The cask was fabricated according to DWG-D-54205, and weighs about 3800 lb. It is not intended for off-site use.

1. Check radioactive materials transfer tag on cask to determine contamination level. Clean if necessary, wearing rubber gloves.
2. Raise cask with crane and remove plastic containment bag (only in a contamination zone) and place in hot can for disposal.
3. Put down blotter paper in work area.
4. Remove drawer bolts and fully open drawers, noting any difficulty (the cam-follower rollers of the drawers may be corroded and require replacement). Have Health Physicist monitor tops of open drawers; clean if necessary.
5. Drop 1/8-in. dia nylon cord through string hole in lid. Tie cord to bale of new lard can with lid, using a knot that can be untied in the cell with the manipulators.
6. Loosely attach 2-4 strips of 2-in. masking tape (with manipulator tabs on one end) to sides or top of new lard can.
7. Pull lard can into cask, and lower and center the cask onto the 14-in. dia port of cell 2.

B-25 (Continued)

8. Open the port (Procedure B-19).

9. Lower the new lard can into the cell - about 14 ft of cord from Penthouse floor to work table.

10. Have assistant in Operating Area pull off masking tape strips and use them to fasten lid onto the full lard can in cell. Untie the cord and knot it onto the bale of the full can.

11. Pull the full lard can up into the scrap carrier, taking care that the contaminated cord is gathered into a gloved hand to prevent spread of contamination. Hold can suspended until drawers are shut and bolted. Lower to top of drawers and cut cord, allowing the stub of the cord to fall back into the cavity. Dispose of the contaminated cord and gloves properly.

12. Close the port into the cell.

13. Raise cask, have Health Physicist check cask for contamination; clean if necessary. Wrap in clean plastic bag.

14. Have Health Physicist prepare transfer tag to Burial Ground and fill in and sign the appropriate Burial/Storage Authorization form (the Burial/Storage form is prepared by operating personnel).

PROCEDURE B-27 Date Revised: June 1975

HIGH RADIATION LEVEL CHEMICAL DEVELOPMENT FACILITY - BLDG. 4507

Operation of Uranium Shielded Cask D-38
(AEC-OR USA 5787/BLF)

The D-38 carrier is a stainless steel-clad depleted uranium metal-shielded cask, weighing 1300 lb, that is 12/3-4 in. OD x 22-5/8-in. tall and which has a 6-in. dia x 13-13/16-in. tall cavity. The cask has a bolted top and a screwed bottom drain hole (for underwater loading). The cask is used for off-site shipments of radioactive fuels and wastes.

Operating Procedures are found in the Safety Analysis Report - Packaging (SARP) for the D-38 cask, ORNL-TM-4485.

PROCEDURE B-28 Date Revised: June 1975

HIGH RADIATION LEVEL CHEMICAL DEVELOPMENT FACILITY - BLDG. 4507

Operation of Hot Garden Carrier

The Hot Garden Carrier is a stainless steel-clad lead-shielded cylinder 22-1/2-in. OD x 30-3/4-in. tall containing a cavity 6-in. dia by 14-in. tall. The cavity has a bolted top plug closure (containing a string hole) and a sliding bottom drawer, which is held closed by 1-2 bolts. The cask, fabricated according to DWG-D-36175, weighs about 5000 lb and is for on-site use only.

A special 4-in. thick top plug was fabricated to use in place of the regular 8-in. thick plug; the newer lid permits use of tinned "Isotope Cans" 5-1/2-in. dia x 14-in. tall.

Procedures for using this cask are the same as those in B-26 and B-27.

PROCEDURE B-29 Date Revised: June 1975

HIGH RADIATION LEVEL CHEMICAL DEVELOPMENT FACILITY - BLDG. 4507

Operation of Garden Carrier No. 2

(AEC-OR USA 6088/BLF)

Garden Carrier No. 2 is a stainless steel-clad, lead-shielded cylindrical cask 25-3/16-in. OD x 40-3/8-in. tall resting on a 1-in. thick, 32-in. dia base plate. The cavity is 7-in. dia x 24-in. tall and is exposed by removing a bolted top plug or by opening two opposing, stepped, sliding drawers operated by jackscrews and angle drives. The top plug contains a covered string reservoir and tube leading to the cavity. The cask weighs about 9000 lb, and may be used for off-site shipments.

Operating procedures are found in the Safety Analysis Report - Packing (SARP) for the Garden Carrier No. 2, ORNL-TM-4691.

PROCEDURE B-30 Date Revised: June 1975

HIGH RADIATION LEVEL CHEMICAL DEVELOPMENT FACILITY - BLDG. 4507

Operation of Dry Hole Charger Cask

The Dry Hole Charger is a stainless steel-clad lead-shielded cask, 24-in. OD x 64-7/8-in. tall, rests on a 1-in. thick x 32-in. dia base plate. The cavity is 6-in. dia x 41-in. tall and is exposed by removing a bolted top plug or by opening two opposing, stepped, sliding drawers operated by jackscrews and angle drives. The top plug contains a covered string reservoir and tube leading to the cavity. The cask weighs about 12,000 lb and is used for on-site shipments only.

Operating procedures are the same as those of Garden Carrier No. 2, and are found in ORNL-TM-4691.

PROCEDURE B-31 Date Revised: June 1975

HIGH RADIATION LEVEL CHEMICAL DEVELOPMENT FACILITY - BLDG. 4507

Operation of HRLEL Carriers

The HRLEL (Operations Division) Scrap and Dry Storage Facility Carriers are stainless steel-clad, lead-shielded casks of various sizes and weights. Their operation is generally similar to the Chemical Technology Division casks, with two major exceptions: an electromagnet is used to pull fuel or scrap cans (having a steel plate in their lids) into the casks, and the casks are lifted by trunions and yoke so that they may be loaded or unloaded horizontally or vertically.

The magnet power supply is plugged into a 110V source and the leads are attached to the power cord for the electromagnet, the magnet is released from its catch and is lowered by the power cord onto the steel plate of the container. The power is turned on to energize the magnet, the can is lifted by the cord, the bottom drawer opened, and the can is lowered into (or out of) a 4507 hot cell. The magnet is turned off at the control box to release the can. As the magnet is pulled out of the cell by its power cord, two persons are required: one to pull up the cord (now probably contaminated by reason of its passage through the cask into the cell) and the second to clean and dry the cord as it emerges from the hole in the top of the cask. The HP surveyor will also survey the cord as it is cleaned. The magnet is secured in its catch, the cord is disconnected from the power supply, and is coiled around the cask inside the yoke. Both cask and power supply are placed in plastic bags for their return to HRLEL.

PROCEDURE B-32 Date Revised: June 1975

HIGH RADIATION LEVEL CHEMICAL DEVELOPMENT FACILITY - BLDG. 4507

Operation of Other CTD Casks

Other casks belonging to the Chemical Technology Division are described in ORNL-TM-2509 (2-19-69). Their operation is generally obvious.

PROCEDURE B-33 Date Revised: June 1975

HIGH RADIATION LEVEL CHEMICAL DEVELOPMENT FACILITY - BLDG. 4507

Protective Clothing and Respiratory Protection

Protective clothing and respiratory protection is worn when the possibility of personal contamination exists. The clothing and respiratory protection requirements for various operations and areas will be designated by the building supervisor, based upon the advice of the Health Physics surveyor. Each person engaged in active operations in Bldg. 4507 will be given the opportunity to be fitted and tested in the various respiratory protection devices supplied by the Industrial Hygiene Department at Bldg. 3550. The supervisor of each operating group in Bldg. 4507 will arrange with the building supervisor to have the members of that group tested.

Protective clothing requirements may vary from laboratory coats worn over personal clothing to contamination zone coveralls to air-suits that provide an independent air supply to a worker. The usual "full-protective clothing" is two pairs of coveralls, assault mask, and canvas hood; only this will be described.

DRESSING

1. Remove personal clothing, watches, etc. It is advisable to wear no personal underwear or socks under the contamination clothing; this is optional, but these items may not be replaced if they become contaminated.[a]
2. Put on contamination-zone coveralls. Place film badge, personal radiation monitor (PRM) if worn, and pocket meters in small, sealed plastic bag and place in breast pocket of coveralls. Secure gas mask and adjust fit.

---

[a]Go to the bathroom at this point; it will be difficult hereafter.

B-22 (Continued)

4. Put plastic shoe covers on over yellow shoes. Put plastic booties on over shoe covers. Tuck legs of coveralls into booties, and seal together with a 12-15-in. length of 2-in. wide masking tape having a 1" tab on the outside end (for easy removal).
5. Take 2-in. masking tape strips (with tabs) and seal front and any other openings of coveralls. Pockets may also be closed.
6. Don a second, larger-sized pair of coveralls and a second pair of plastic booties. These need only to be snapped closed; no tape is required.
7. Place dosimeter in plastic bag in breast pocket of outer coveralls. Place extra pair of booties in hip pockets. Place extra pair of rubber gloves in side pockets.
8. Fold back sleeves of outer coveralls. Put on finger rings if required. Put on cotton "undertakers" gloves. Put on close-fitting rubber gloves, and tape gloves to sleeves of inner coveralls with tabbed strip of 2-in. wide masking tape.
9. Fold down outer coverall sleeves, and tape a second, larger pair of rubber gloves to these sleeves with 2-in. masking tape.
10. Put on gas mask, adjust to comfortable fit.
11. Put knit cotton cap on over gas mask straps to cover hair.
12. Secure a canvas hood and have another person seal it to the coveralls and gas mask with 2-in. masking tape. Cover all joints. Arrange short, overlapping strips of tape with tabs so that the entire seal can be removed with a single pull.
13. Note: A third, loose pair of rubber gloves and plastic booties may be worn, which can easily be changed if they become highly contaminated.
14. Do not attempt to work too rapidly or over-exert yourself. The air supply in a gas mask is very limited! Until one gets used to working in a mask, a person can easily get out of breath and feel like removing the mask in order to get air. This cannot be done!

B-33 (Continued)

UNDRESSING

1. Do not attempt to remove the outer clothing by yourself. Flapping the clothing around will only spread particles around if it has become contaminated. The HP surveyor will check for contamination as you are undressed. We usually remove the outer clothing in the containment tent of the work area and place it in plastic bags.
2. LEAVE THE GAS MASK ON!
3. Have someone strip off the tape and remove the canvas hood.
4. Remove outer gloves and plastic booties.
5. Remove dosimeter and other items from pockets of outer coveralls. Unbutton coveralls.
6. Have someone help you out of the outer coveralls from the rear - folding or pulling them inside-out as they are removed. Place them in plastic bag.
7. Have HP surveyor check inner coveralls, knit cap, gas mask, etc. for contamination.
8. If not contaminated, go to portal of containment tent, remove outer pair of booties and step out into the clean zone in shoe covers. Remove gas mask and knit cap, then gloves. Place each in proper container.
9. If inner clothing is contaminated, the HP surveyor and others will assist in removing the clothing and exchanging it for clean clothing. Keep gas mask on until cleared to remove it.

PROCEDURE B-34 Date Revised: June 1975

HIGH RADIATION LEVEL CHEMICAL DEVELOPMENT FACILITY - BLDG. 4507

Decontamination from Radioactivity

The accidental contamination of casks, floors, tools, glove boxes, and other items by radioactive materials is an occasional occurrence in hot cell operations. Routine operations performed in a safe manner, using good common sense and caution, will prevent large-scale contamination problems. Small-scale, local contamination is usually easy to clean up as soon as it is released; this is the reason that the presence of a Health Physics surveyor is required for most operations in Bldg. 4507.

The problem of radioactive contamination may be divided into two areas: (1) contamination by dust and particulates and (2) contamination by liquids. The dry contamination is generally easier to clean up than that caused by radioactive liquids, especially solutions that may etch the metal surfaces or dissolve or react with a painted finish. In either case the preferred method of decontamination in Bldg. 4507 is to remove the nuclides by using progressively harsher reagents. This is done to minimize driving the contamination into the surface of the material, making it more difficult to remove. Small volumes of solution should be used in order to limit the spread of the contamination. Uncontrolled flushing with a hose should never be done.

A suggested procedure is:

1. Press or rub masking tape over the contaminated spot to pick up isolated dry particles in small areas. Repeat until no more activity is removed.[a]

---

[a]In a larger release of dry particles, a vacuum cleaner, modified by the addition of HEPA filters on its inlet and outlet and discharged into cell ventilation, may be used for the first cleanup.

B-34 (Continued)

2. Wipe only once with a sanitary napkin or wad of cheesecloth dampened with water. Do not use dripping wet! Rewipe once with another dry napkin or piece of cheesecloth. Discard the wipes.

3. Wipe once only with a sanitary napkin or cheesecloth dampened with liquid detergent (Ajax) or liquid detergent containing a complexing agent. Dry with a clean cloth or pad. Cleaning solutions containing complexing agents may include:

   a. Ajax liquid cleaner + 5% DTPA

   b. Ajax + 1% EDTA

   c. "Baybarz Solution": dilute Knox-60 glass cleaner + 5% DTPA

   d. Meservey Solution:[b] 0.3 M ammonium oxalate--1 M hydrogen peroxide; adjust to pH 4.5 with small amounts oxalic acid. Use at 95°C.

   e. 10% ammonium citrate--1/2% sodium EDTA. Use hot.

4. A paste of scouring powder and water has been used to abrade the surface to remove residual contamination. Wipe clean with damp cloth.

5. Sources in deep cracks and crevices have been removed by coating a limited area with a strippable vinyl coating (Cocoon No. 333) or an RTV silicone rubber casting material, drying, and peeling away the coating and imbedded contamination.

---

[b]A. B. Meservey, in Progress in Nuclear Energy, Series IV, Technology, Engineering, and Safety, Vol. 4, p. 377ff (Procedures and Practices for Decontaminating Plants and Equipment).

B-34 (Continued)

7. Organic solvents may be used with care to remove grease or oil films that hold the contamination.

8. Acids may be used as a final method of removing radioactive contamination. The strength and corrosiveness of the acids should be gradually increased until the cleaning has been done using the minimum concentration. For example, on stainless steel use dilute nitric acid, stronger nitric acid, concentrated nitric acid, dilute nitric acid (20%) containing 3% HF, and, as a last resort, nitric acid containing HCl or plain hydrochloric acid. Alternating treatments with 15% HNO_3, 6% NaOH--1% Na tartrate, 5% oxalic acid, and 5% NaOH--1.6% $KMnO_4$ was reported to be good and is less corrosive.

9. Hot alkaline permanganate (10% NaOH--3% $KMnO_4$) followed by 10% sodium bisulfite has been reported good for plutonium and ruthenium contamination. Rinse well. A solution of 0.5% ammonium bifluoride in 5% citric acid may be used, followed by 3% NaOCl--5% NaOH (Chlorox).

10. In the past it was sometimes necessary to sandblast the concrete walls of a hot cell to remove the paint and radioactive contamination which had soaked into the concrete. This was done only when necessary since the interior of the cell had to be replastered and then repainted.

APPENDIX G OF ORNL-CF-73-9-4, OPERATION OF BUILDING 4556 CELL VENTILATION AND FILTRATION FACILITY

The Building 4556 cell ventilation and filtration facility (Fig. 4) located 60 ft west of Building 4507, was designed by the ORNL General Engineering and Construction Division and was built by Rust Engineering Company in the summer of 1972. The detailed engineering and construction drawings for the facility are Nos. H-21230-EG-001-D through EG-009-D, EB-003-D through EB-5D, ED-001-D through ED-002-D, EA-001-D, and C-21230-EA-001-D.

Brief operational procedures for the facility are:

1. Startup

   a. Open metal hatch over stairway to 4556.

   b. Turn on ventilating fan using switch on west edge of hatch.

   c. Turn on lights using switch on west edge of hatch.

   d. Turn switch (SW-1) to OFF position (Fig. 5).

   e. Turn on main electrical disconnects for:

      Exhaust Fan No. 1 (east) EF-1

      Exhaust Fan No. 2 (west) EF-2

      Transformer disconnect

      Transformer disconnect

   f. Open butterfly valves at inlets and outlets of filter housings.

   g. To Run EF-1 and hold EF-2 in STANDBY:

      (1) Turn SW-1 to left, labelled EF-1 on, EF-2 standby. (EF-2 will start running.)

      (2) Push START RESET (PB-3) button. (EF-1 will start running, EF-1 pilot light will burn on 4556 control panel and in 4507, and EF-2 will be in standby.)

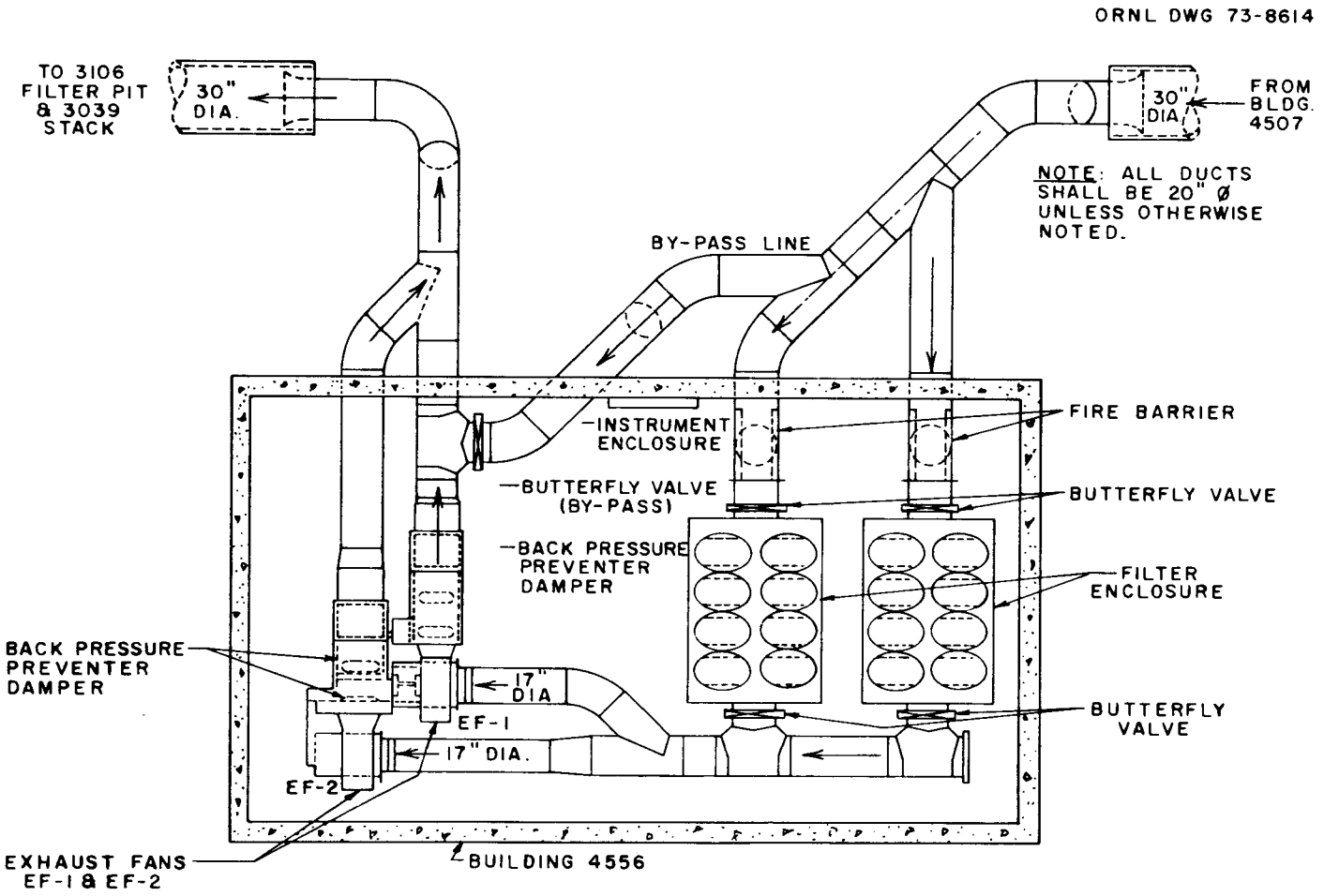

Fig. 4. Building 4556 Filter Pit Layout.

APPENDIX G

ORNL DWG 73-8629

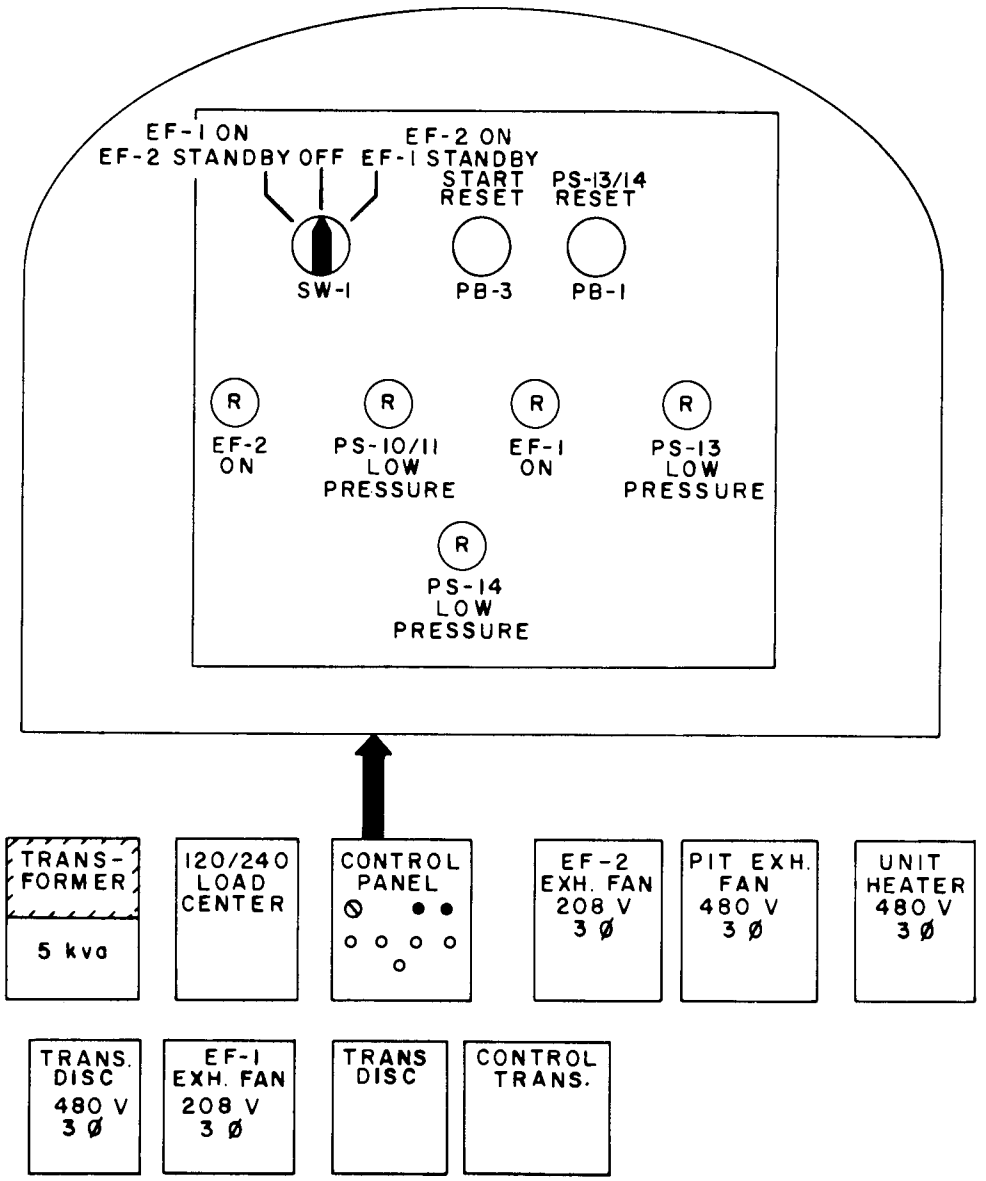

Fig. 5. Electrical Controls, Building 4556 Filter Pit.

(3) Wait 30 seconds for time delay relay to operate (nothing should happen).

h. To Run EF-2 and hold EF-1 in STANDBY:

(1) Turn SW-1 to right, labelled EF-2 ON, EF-1 STANDBY (EF-1 will start running).

(2) Push START RESET (PB-3) button. (EF-2 will start running, EF-2 pilot light will burn on 4556 control panel and in 4507, and EF-1 will be in standby.)

(3) Wait 30 seconds for time delay relay to operate (nothing should happen).

i. Close BYPASS butterfly valve.

j. Observe pressures and vacuum on gages.

k. Turn off lights, ventilating fan, close hatch.

2. Manual shutdown of fans

a. Open BYPASS butterfly valve to maintain ventilation in 4507.

b. Turn SW-1 to OFF position; fan will stop.

c. Close butterfly valves at inlets and outlets of filter housings.

3. Automatic shutdown of fans

a. Low fan suction(PS-10/11)

(1) Pressure switches PS-10 and PS-11, which measure the vacuum at the inlets of the fans, are set to operate at -2.0 in. of water (normal operating vacuum is about -5.6 in. of water). When the fan suction falls to less than -2.0 inches, the operating fan will automatically stop and the standby fan automatically start. (The caution light operates at -3.0 in. water.)

APPENDIX G

(2) Loss of fan suction may be due to:

(a) Loss of electric power to blower motor

(b) Failure of electric motor parts

(c) Broken belt drive to blower

(d) Motor or blower bearing trouble.

(3) If this happens, the following will occur:

(a) PS-10/11 LOW PRESSURE Telealarm and lights will give audible and visual signals at 4556 control panel, 4507 central control panel, and Shift Patrol Headquarters.

(b) Standby fan running alarm and lights will give audible and visual signals at 4507 central control panel and Shift Patrol Headquarters.

(c) The standby fan pilot light (EF-1 or EF-2) will turn on at 4507 and 4556 control panels.

(4) If the blowers switch automatically, do the following:

(a) Go to 4556 and determine why the fans switched.

(b) Determine whether repairs may be made easily; notify supervision if repairs are necessary.

(c) If no repairs are needed, attempt to restart the operating fan using procedure above (Appendix G-1). Observe operation to be sure the fan will continue in service.

(d) Clear all lights at 4507 central control panel.

APPENDIX G

b. Low Stack Vacuum (PS-13/14)

(1) Pressure switches PS-13 and PS-14, which measure the vacuum in the duct at the discharge side of the blowers, reflect the operation of the 3039 stack and the various facilities between 4556 and the stack. Normal vacuum in the duct produced by the electrically driven motors at 3039 is about 3.3 in. of water and about 1.8 in. of water when the steam-driven fans are operating. If the vacuum in the duct falls to less than -0.5 in. of water, the operating fan in Bldg. 4556 will automatically stop to prevent pressurization of the duct; the standby fan will also not operate. (A caution light will operate at -0.8-in. water.)

(2) Loss of duct vacuum may be due to:

(a) Electric motor failure at 3039

(b) "Steam-jenny" failure at 3039

(c) Massive air-leak into duct

(3) If the duct loses vacuum and the 4556 fans stop, the following will occur:

(a) PS-13/14 low stack vacuum telealarm and lights will give audible and visual signals at 4556 control panel, 4507 central control panel, and at shift patrol headquarters.

(b) PS-10/11 low pressure telealarm and lights will give audible and visual signals at 4556, 4507, and shift patrol headquarters.

(c) All telealarms on cell and building ventilation system will give audible and visual signals on 4507 central control panel.

(d) Both EF-1 and EF-2 pilot lights will be dark.

(4) If both 4556 blowers stop because of low stack vacuum, do the following:

(a) Push PS-13/14 RESET button (PB-1) on Bldg. 4556 control panel or PS-13/14 REMOTE RESET button (PB-2) on Bldg. 4507 central control panel to attempt to restart the fans.

(b) If the operating fan in 4556 does not start, or starts and stops again because of continued high pressure in the duct, put Bldg. 4507 into containment by pushing the MANUAL CONTAIN button on the 4507 central control panel.

(c) Push SILENCE KLAXON button to stop alarms.

(d) Use PA system to announce building evacuation for unnecessary personnel.

(e) Cover air inlets to cells and glove boxes to increase available vacuum.

(f) Open BYPASS valve in Bldg. 4556.

(g) When vacuum in duct has been restored, push PS-13/14 RESET button to start for operation. Close bypass valve.

(h) Remove 4507 from containment, uncover air inlets, etc., and resume normal operation.

(i) Check condition of fans, vacuum, pressure drops, etc., in Bldg. 4556.

c. High vacuum in Bldg. 4556 (PS-20)

(1) Pressure switch PS-20, located in Bldg. 4556, serves to shut off the 575 cfm pit ventilation fan in order to prevent the vacuum in Bldg. 4556 from becoming greater than 1/2-in. of water. This is a safety device to keep the building vacuum

from becoming so great that the hatch doors cannot be opened by a person inside the building.

4. Changing filters in 4556

   a. Roughing and absolute filters will be changed when the pressure drop across the filters increases to the point that the vacuum in the cells is less than -0.75-in. water or when the radioactivity level at the filter housings increases to the point of creating an unnecessary hazard of exposure to operating and maintenance personnel.

   b. Contaminated filters will be bagged out of the filter housings using established procedures for handling radioactive objects. Health Physics surveillance is required during filter changes.

   c. The filters in only one unit will be changed at a time; normal cell ventilation air will be pulled through the other bank of filters during the change.

   d. Containment of the filters in the housings will be maintained using bags and rings on the bag ports.

5. Fire barriers

   a. Fire barriers are located in the stainless steel duct elbows just above the filter housings.

   b. If the pressure drop across the fire barriers increases, the screens may be inspected through an observation port in the elbow of the duct. The port is protected by a metal containment plate bolted over the safety glass.

APPENDIX G

c. The fire barriers may be bagged - one at a time - out of the ducts, if clogged; and sent to another area for cleaning and decontamination. A temporary end plate for the ducts should be bolted over the bag closure while the fire barrier is removed. The air flow should be diverted through the other bank of filters during the cleaning operation by closing the inlet valve.

DISTRIBUTION

1-9. R. G. Affel
10. W. D. Bond
11. R. E. Brooksbank
12. K. B. Brown
13. T. G. Clark
14. J. C. Davis
15. D. E. Ferguson
16-20. C. L. Fitzgerald
21-30. J. H. Goode
31. J. H. Greene
32. E. L. Hendren
33. R. S. Howell
34. F. A. Kappleman
35. D. J. Kington
36. O. L. Kirkland
37. R. E. Leuze
38. J. C. Mailen
39. A. P. Malinauskas
40. R. H. Rainey
41. J. B. Ruch
42. R. J. Shannon
43. R. G. Stacy
44. O. K. Tallent
45. V. C. A. Vaughen
46. B. T. Walters
47-48. Central Research Library
49. Document Reference Section
50-51. Laboratory Records Department
52. Laboratory Records Department-RC