LOCKHEED MARTIN ENERGY RESEARCH LIBRARIES

3 4456 0515248 3

ORNL-5065

Cy 1

The Theory and Numerical Calculation of the Acoustic Field Exerted by Eddy-Current Forces

Katsuhiro Kawashima

OAK RIDGE NATIONAL LABORATORY
CENTRAL RESEARCH LIBRARY
DOCUMENT COLLECTION
LIBRARY LOAN COPY
DO NOT TRANSFER TO ANOTHER PERSON
If you wish someone else to see this document, send in name with document and the library will arrange a loan.

OAK RIDGE NATIONAL LABORATORY
OPERATED BY UNION CARBIDE CORPORATION • FOR THE U.S. ATOMIC ENERGY COMMISSION

Printed in the United States of America. Available from
National Technical Information Service
U.S. Department of Commerce
5285 Port Royal Road, Springfield, Virginia 22161
Price: Printed Copy $6.50; Microfiche $2.25

This report was prepared as an account of work sponsored by the United States Government. Neither the United States nor the Energy Research and Development Administration, nor any of their employees, nor any of their contractors, subcontractors, or their employees, makes any warranty, express or implied, or assumes any legal liability or responsibility for the accuracy, completeness or usefulness of any information, apparatus, product or process disclosed, or represents that its use would not infringe privately owned rights.

ORNL-5065
UC-25 — Materials

Contract No. W-7405-eng-26

METALS AND CERAMICS DIVISION

THE THEORY AND NUMERICAL CALCULATION OF THE ACOUSTIC FIELD EXERTED BY EDDY-CURRENT FORCES

Katsuhiro Kawashima

JANUARY 1976

OAK RIDGE NATIONAL LABORATORY
Oak Ridge, Tennessee 37830
operated by
UNION CARBIDE CORPORATION
for the
U.S. ENERGY RESEARCH AND DEVELOPMENT ADMINISTRATION

LOCKHEED MARTIN ENERGY RESEARCH LIBRARIES

3 4456 0515248 3

CONTENTS

ABSTRACT 1

INTRODUCTION 2

ELECTROMAGNETIC FORCE 3

Potential 4

Volume Force Equations 6

Force Calculation for Actual Transducer 8

Calculation of Surface Forces 12

Summary of Force Derivation 16

ELASTIC WAVE FROM SURFACE FORCE 16

NUMERICAL CALCULATION OF ELASTIC WAVES 20

Method of Numerical Calculation 20

Calculation of Elastic Wave Exerted by Uniform Surface Force . . 31

Numerical Calculation of the Elastic Wave Exerted by an Electromagnetic Force Caused by the Interaction Between Eddy Currents and a Constant Magnetic Field 46

Accuracy of Numerical Calculation 49

PROBLEMS AND CONSIDERATIONS 50

ACKNOWLEDGMENTS 51

APPENDIX A. Fortran Program for Calculation of Eddy-Current Force . . 55

APPENDIX B. Numerical Data for Figs. 4, 5, and 7 61

APPENDIX C. Derivation of Elastic Wave Fields Produced by Eddy-Current Surface Forces 69

APPENDIX D. Fortran Program for Calculation of Elastic Wave 89

THE THEORY AND NUMERICAL CALCULATION OF THE ACOUSTIC FIELD EXERTED BY EDDY-CURRENT FORCES

Katsuhiro Kawashima[1]

ABSTRACT

The equations for calculating the acoustic field produced within a nonmagnetic metal by interaction of eddy currents with a static magnetic field were obtained on the assumptions (1) an ultrasonic wave is generated by the electromagnetic force through classical and macroscopic phenomena; (2) the electric, magnetic, and elastic properties of the metal are linear, isotropic, and homogeneous throughout the metal, which occupies semi-infinite space; (3) the whole system is axially symmetric; and (4) eddy currents and elastic waves show a steady-state sinusoidal variation. The acoustic field produced by a specific electromagnetic ultrasonic transducer with axial symmetry was calculated numerically, and the results showed a well-defined ultrasonic wave beam, which was narrower than had been expected from the size of the transducer.

[1]On temporary assignment from Nippon Steel Corporation, 2-6-3 Otemachi, Chiyodaku, Tokyo, Japan.

INTRODUCTION

The method for calculating the acoustic field exerted by the interaction of eddy currents with a stationary magnetic field within a nonferromagnetic metal is based on the following assumptions:

1. Ultrasound is generated by the electromagnetic force through classical and macroscopic phenomena.
2. Electric, magnetic, and elastic properties of the material are linear, isotropic, and homogeneous throughout the material, which occupies semi-infinite space.

Several authors[2–4] have given several methods for treating this subject, all of which are approximate methods with regard to both eddy-current and acoustic field calculations. The rigorous method for calculating the force exerted by eddy currents within a conducting metal has already been obtained by Dodd and Deeds.[5] To make the best use of the eddy-current calculations, a rigorous way of calculating the acoustic field should also be employed. The simple method of a piston movement source for calculating the acoustic field is apparently inadequate for the problem because it cannot calculate the acoustic field from the actual applied force. The rigorous way of calculating the elastic wave in a solid is given in the theory of elasticity, by Lamb,[6] Miller and Pursey,[7] Johnson,[8] and many others. Some modification,

---

[2]R. Turner, K. R. Lyall, and J. F. Cochran, "Generation and Detection of Acoustic Waves in Metals by Means of Electromagnetic Radiation," *Can. J. Phys.* 47: 2293 (1969).

[3]Yu. M. Shkarlet and N. N. Lokshina, "Noncontact Electromagnetic Transducer for Ultrasonic Thickness Test of Metallic Products," pp. 13–24 in *Preprints 6. ICNT Vol. B, 1970,* Deutsche Gesellschaft für Zerstörungsfreie Prüfverfahren e.V., Berlin.

[4]H. Wüstenberg, "Contactless Electrodynamic Ultrasonic Transducers and Their Application to Ultrasonic Inspection," pp. 37–48 in *Preprints 6. ICNT Vol. B, 1970,* Deutsche Gesellschaft für Zerstörungsfreie Prüfverfahren e.V., Berlin.

[5]C. V. Dodd, W. E. Deeds, J. W. Luquire, and W. G. Spoeri, *Some Eddy-Current Problems and Their Integral Solutions,* ORNL-4384 (April 1969).

[6]H. Lamb, "On the Propagation of Tremors Over the Surface of an Elastic Solid," *Phil. Trans. Roy. Soc. London Ser. A* 203: 1–42 (1904).

[7]F. Miller and H. Pursey, "The Field and Radiation Impedance of Mechanical Radiators on the Free Surface of a Semi-infinite Isotropic Solid," *Proc. Roy. Soc. London Ser. A* 223: 521–41 (1954).

[8]L. R. Johnson, "Green's Function for Lamb's Problem," *Geophys. J. Roy. Astron. Soc.* 37: 99–131 (1974).

however, must be made for the problem since the force exerted by eddy currents characteristically has both radial and vertical components in a cylindrical coordinate system. In this paper, a general method is described first, and then a numerical evaluation is given, followed by discussions.

ELECTROMAGNETIC FORCE

The force exerted by eddy currents has been calculated by Dodd and Deeds,[5,9] and it agrees very well with measured values. This method is used in this report to calculate the surface force that generates the ultrasound. If the eddy-current penetration depth is much less than the acoustic wavelength, the volume force exerted by the eddy currents can be considered to be a surface force, which acts only on the surface, by integrating it with respect to the depth. The approximate values of the penetration depths and the wavelengths for some metals at a frequency of 1 MHz are shown in Table 1.

Table 1. Eddy-Current Penetration Depths and Acoustic Wavelengths for Selected Metals

Material	Conductivity (Ω^{-1} m^{-1})	Permeability (H/m)	Eddy Current Penetration Depth (μm)	Acoustic Wavelength, mm	
				Longitudinal	Transverse
		$4\pi \times 10^{-7}$			
Steel	6.25×10^{6}	200	14.2	5.9	3.2
Aluminum	2.4×10^{7}	1	103	6.3	3.1
Copper	5.8×10^{7}	1	66	4.7	2.3

In the case of nonmagnetic metals, the force exerted by an electromagnetic field on a unit volume is given, to a very good approximation, by the Lorentz formula

$$\vec{F} = \vec{J} \times \vec{B}$$

$$= -\sigma \frac{\partial \vec{A}}{\partial t} \times (\nabla \times \vec{A}) \ , \qquad (1)$$

[9] C. V. Dodd and W. E. Deeds, "Electromagnetic Forces in Conductors," *J. Appl. Phys.* 38(13): 5045–51 (December 1967).

where σ = conductivity and $\vec{A}$ = vector potential. If axial symmetry is assumed, $\vec{A}$ has only an azimuthal component, A_ϕ, and the force has only radial and axial components in a cylindrical coordinate system

$$F_z = -\sigma \frac{\partial A}{\partial t} \frac{\partial A}{\partial Z} , \tag{2}$$

$$F_r = -\sigma \frac{\partial A}{\partial t} \frac{1}{r} \frac{\partial}{\partial r}(rA) , \tag{3}$$

where $A \equiv A_\phi$. In general, A has a time-varying part, A_ω, and a steady part, A_0, so that

$$F_z = -\sigma \frac{\partial}{\partial t}(A_\omega + A_0) \frac{\partial}{\partial Z}(A_\omega + A_0)$$

$$= -\sigma \frac{\partial}{\partial t} A_\omega \frac{\partial}{\partial Z}(A_\omega + A_0) , \tag{4}$$

$$F_r = -\sigma \frac{\partial}{\partial t}(A_\omega + A_0) \frac{1}{r} \frac{\partial}{\partial r}[r(A_\omega + A_0)]$$

$$= -\sigma \frac{\partial}{\partial t} A_\omega \frac{1}{r} \frac{\partial}{\partial r}[r(A_\omega + A_0)] . \tag{5}$$

Potential

First we consider the case shown in Fig. 1, where A_ω is produced by the time-varying current I_ω in a coil and A_0 is produced by the stationary current I_0 in the same coil.

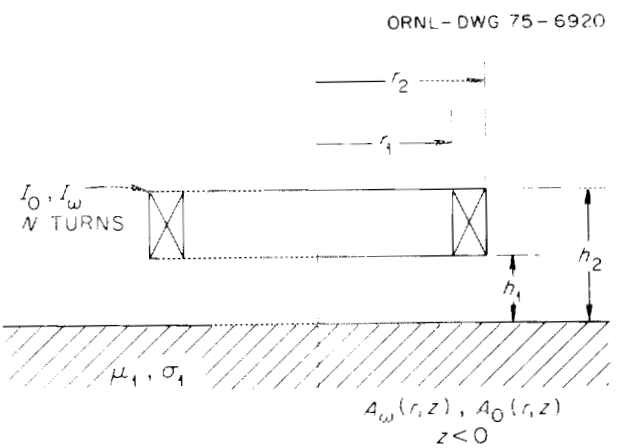

Fig. 1. Variables in Interaction of Coil with Specimen.

The vector potential A_ω at any point in a semi-infinite conductor produced by I_ω is represented by Eq. (6). (See ref. 5.)

$$A_\omega \equiv A_\omega(r,z) = \mu_1 \frac{NI_\omega}{(h_2 - h_1)(r_2 - r_1)} \int_0^\infty \frac{1}{\zeta^3} I(\zeta r_2, \zeta r_1)\, J_1(\zeta r)(e^{-\zeta h_1} - e^{-\zeta h_2}) \frac{e^{\eta_1 z}}{\frac{\mu_1}{\mu_0} + \frac{\eta_1}{\zeta}}\, d\zeta \ , \tag{6}$$

where $\eta_1 = \sqrt{\zeta^2 + j\omega\mu_1\sigma_1}$

$$I(\zeta r_2, \zeta r_1) = I_1(\zeta r_2) - I_1(\zeta r_1)$$

$$I_1(\zeta r_i) = \int_0^{\zeta r_i} p J_1(p)\, dp$$

We must take the real part of the product of $e^{j\omega t}$ and $A_\omega(r,z)$ to know the real physical value of the vector potential:

$$\tilde{A}_\omega = \text{Real}(A_\omega e^{j\omega t}) \ . \tag{7}$$

Note: $\tilde{X}$ is used to represent the physical value of a complex quantity X in the rest of the report.
The steady part, $A_0(r,z)$, of the vector potential is given as follows:

$$A_0 \equiv A_0(r,z) = \mu_1 \frac{NI_0}{(h_2 - h_1)(r_2 - r_1)} \int_0^\infty \frac{1}{\zeta^3} I(\zeta r_2, \zeta r_1)\, J_1(\zeta r)(e^{-\zeta h_1} - e^{-\zeta h_2}) \frac{e^{\zeta z}}{\frac{\mu_1}{\mu_0} + 1}\, d\zeta \ , \tag{8}$$

$$\frac{\partial}{\partial z} A_0 = \mu_1 \frac{NI_0}{(h_2 - h_1)(r_2 - r_1)} \int_0^\infty \frac{1}{\zeta^3} I(\zeta r_2, \zeta r_1)\, J_1(\zeta r)(e^{-\zeta h_1} - e^{-\zeta h_2}) \frac{\zeta e^{\zeta z}}{\frac{\mu_1}{\mu_0} + 1}\, d\zeta \ , \tag{9}$$

$$\frac{1}{r}\frac{\partial}{\partial r} rA_0 = \mu_1 \frac{NI_0}{(h_2 - h_1)(r_2 - r_1)} \int_0^\infty \frac{1}{\zeta^3} I(\zeta r_2, \zeta r_1)\, \zeta J_0(\zeta r)(e^{-\zeta h_1} - e^{-\zeta h_2}) \frac{e^{\zeta z}}{\frac{\mu_1}{\mu_0} + 1}\, d\zeta \ . \tag{10}$$

When all lengths are divided by an average radius, $r_{12} = (r_1 + r_2)/2$, ζ is multiplied by r_{12}, and η_1 is redefined as

$$\sqrt{\zeta^2 + j\omega\mu_1\sigma_1 r_{12}^2} \ ,$$

Eqs. (6), (9), and (10) become

$$A_\omega \equiv A_\omega(r,z) = \mu_1 \frac{NI_\omega}{(h_2 - h_1)(r_2 - r_1)} \int_0^\infty \frac{1}{\zeta^3} I(\zeta r_2, \zeta r_1)\, J_1(\zeta r)(e^{-\zeta h_1} - e^{-\zeta h_2}) \frac{e^{\eta_1 z}}{\frac{\mu_1}{\mu_0} + \frac{\eta_1}{\zeta}}\, d\zeta \ , \tag{11}$$

$$\frac{\partial}{\partial z} A_0 = \mu_1 \frac{NI_0}{(h_2 - h_1)(r_2 - r_1)r_{12}} \int_0^\infty \frac{1}{\zeta^3} I(\zeta r_2, \zeta r_1)\, J_1(\zeta r)(e^{-\zeta h_1} - e^{-\zeta h_2}) \frac{\zeta e^{\zeta z}}{\frac{\mu_1}{\mu_0} + 1}\, d\zeta \,, \tag{12}$$

$$\frac{1}{r}\frac{\partial}{\partial r}(rA_0) = \mu_1 \frac{NI_0}{(h_2 - h_1)(r_2 - r_1)r_{12}} \int_0^\infty \frac{1}{\zeta^3} I(\zeta r_2, \zeta r_1)\, \zeta J_0(\zeta r)(e^{-\zeta h_1} - e^{-\zeta h_2}) \frac{e^{\zeta z}}{\frac{\mu_1}{\mu_0} + 1}\, d\zeta \,. \tag{13}$$

Volume Force Equations

A physical value of the force is represented as

$$\begin{aligned}
\tilde{F}_z &= -\sigma \frac{\partial \tilde{A}}{\partial t} \frac{\partial \tilde{A}}{\partial z} \\
&= -\sigma \frac{\partial}{\partial t} \tilde{A}_\omega \frac{\partial}{\partial z}\left(\tilde{A}_\omega + \tilde{A}_0\right) \\
&= -\sigma \frac{\partial}{\partial t}\left[\mathrm{Real}\left(A_\omega e^{j\omega t}\right)\right] \frac{\partial}{\partial z}\left[\mathrm{Real}\left(A_\omega e^{j\omega t}\right) + A_0\right] \\
&= -\sigma\, \mathrm{Real}\left(A_\omega j\omega e^{j\omega t}\right)\left[\mathrm{Real}\left(\frac{\partial A_\omega}{\partial z} e^{j\omega t}\right) + \frac{\partial A_0}{\partial z}\right] \\
&= -\sigma\omega\left[\mathrm{Real}\left(A_\omega j e^{j\omega t}\right)\right]\left[\mathrm{Real}\left(\frac{\partial A_\omega}{\partial z} e^{j\omega t}\right)\right] - \sigma\omega\left[\mathrm{Real}\left(A_\omega j e^{j\omega t}\right)\right] \frac{\partial A_0}{\partial z} \,.
\end{aligned} \tag{14}$$

The first term of Eq. (14) yields a steady term, $\tilde{F}_{z0}$, and a time harmonic part, $\tilde{F}_{z2\omega}$, which has an angular frequency of 2ω. The second term yields a time-harmonic part, $\tilde{F}_{z1\omega}$, having an angular frequency of ω.

$$\tilde{F}_{z0} = \frac{\sigma\omega}{2}\left[\mathrm{Im}(A_\omega)\ \mathrm{Real}\left(\frac{\partial A_\omega}{\partial z}\right) - \mathrm{Real}(A_\omega)\ \mathrm{Im}\left(\frac{\partial A_\omega}{\partial z}\right)\right] \,, \tag{15}$$

$$\begin{aligned}
\tilde{F}_{z2\omega} = \frac{\sigma\omega}{2}\Bigg\{&\left[\mathrm{Real}\left(\frac{\partial A_\omega}{\partial z}\right)\ \mathrm{Im}(A_\omega) + \mathrm{Im}\left(\frac{\partial A_\omega}{\partial z}\right)\ \mathrm{Real}(A_\omega)\right] \cos 2\omega t \\
&+ \left[\mathrm{Real}\left(\frac{\partial A_\omega}{\partial z}\right)\ \mathrm{Real}(A_\omega) - \mathrm{Im}\left(\frac{\partial A_\omega}{\partial z}\right)\ \mathrm{Im}(A_\omega)\right] \sin 2\omega t\Bigg\} \,,
\end{aligned} \tag{16}$$

$$\tilde{F}_{z1\omega} = -\sigma\omega\left[\mathrm{Real}\left(A_\omega j e^{j\omega t}\right)\right] \frac{\partial A_0}{\partial z}$$

$$= \sigma\omega\left[\mathrm{Im}(A_\omega) \cos \omega t + \mathrm{Real}(A_\omega) \sin \omega t\right] \frac{\partial A_0}{\partial z} . \tag{17}$$

In a similar manner

$$\tilde{F}_r = \tilde{F}_{r0} + \tilde{F}_{r2\omega} + \tilde{F}_{r1\omega} .$$

where

$$\tilde{F}_{r0} = \frac{\sigma\omega}{2}\left[\mathrm{Im}(A_\omega)\ \mathrm{Real}\left(\frac{1}{r}\frac{\partial}{\partial r} rA_\omega\right) - \mathrm{Real}(A_\omega)\ \mathrm{Im}\left(\frac{1}{r}\frac{\partial}{\partial r} rA_\omega\right)\right] , \tag{18}$$

$$\tilde{F}_{r2\omega} = \frac{\sigma\omega}{2}\left\{\left[\mathrm{Real}\left(\frac{1}{r}\frac{\partial}{\partial r} rA_\omega\right)\ \mathrm{Im}(A_\omega) + \mathrm{Im}\left(\frac{1}{r}\frac{\partial}{\partial r} rA_\omega\right)\ \mathrm{Real}(A_\omega)\right] \cos 2\omega t\right.$$

$$\left. + \left[\mathrm{Real}\left(\frac{1}{r}\frac{\partial}{\partial r} rA_\omega\right)\ \mathrm{Real}(A_\omega) - \mathrm{Im}\left(\frac{1}{r}\frac{\partial}{\partial r} rA_\omega\right)\ \mathrm{Im}(A_\omega)\right] \sin 2\omega t\right\} , \tag{19}$$

$$\tilde{F}_{r1\omega} = -\sigma\omega\left[\mathrm{Real}\left(A_\omega j e^{j\omega t}\right)\right]\left(\frac{1}{r}\frac{\partial}{\partial r} rA_0\right)$$

$$= \sigma\omega\left[\mathrm{Im}(A_\omega) \cos \omega t + \mathrm{Real}(A_\omega) \sin \omega t\right]\left(\frac{1}{r}\frac{\partial}{\partial r} rA_0\right) . \tag{20}$$

If A_0 is much larger than A_ω; that is, the steady magnetic field is much larger than the time harmonic magnetic field, we can assume the following equations.

$$\tilde{F}_z \approx \tilde{F}_{z1\omega}$$

$$= -\sigma\omega\left[\mathrm{Real}\left(A_\omega j e^{j\omega t}\right)\right] \frac{\partial A_0}{\partial z} , \tag{21a}$$

$$\tilde{F}_r \approx \tilde{F}_{r1\omega}$$

$$= -\sigma\omega\left[\mathrm{Real}\left(A_\omega j e^{j\omega t}\right)\right]\left(\frac{1}{r}\frac{\partial}{\partial r} rA_0\right) . \tag{21b}$$

We know that both $\tilde{F}_{z1\omega}$ and $\tilde{F}_{r1\omega}$ are proportional to the product of N^2, I_0, and I_ω from Eqs. (11), (12), (13), (17), and (20).

Force Calculation for Actual Transducer

Second, we consider the case shown in Fig. 2, where A_ω is produced by time varying currents in a coil and A_0 is produced by an electromagnet located near the coil.

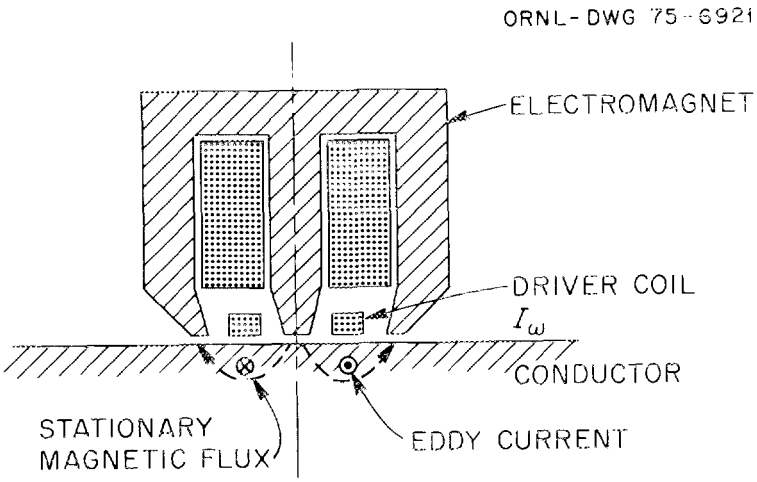

Fig. 2. Arrangement of Electromagnet with Eddy-Current Coil.

In this case we simply have to replace $\partial A_0/\partial z$ with B_r, which is the horizontal and radial component of the stationary magnetic field:

$$\tilde{F}_z = -\sigma\omega\left[\text{Real}\left(A_\omega j e^{j\omega t}\right)\right]B_r$$

$$= \text{Real}\left(J_\omega e^{j\omega t}\right)B_r$$

$$= \tilde{J}_\omega B_r \ , \tag{22a}$$

where $\tilde{J}_\omega$ is the real physical value of the eddy current density within the conductor. Similarly,

$$\tilde{F}_r = -\sigma\omega\left[\text{Real}\left(A_\omega j e^{j\omega t}\right)\right]B_z$$

$$= \text{Real}\left(J_\omega e^{j\omega t}\right)B_z$$

$$= \tilde{J}_\omega B_z \ , \tag{22b}$$

where B_z is the vertical component of the stationary magnetic field.

We calculate J_ω, F_z, and F_r using Eqs. (11), (22a), and (22b) by numerical quadrature. The electromagnet is neglected for the eddy-current calculation. It is not considered to have a great effect on the eddy-current distribution within a nonmagnetic conductor, because most of the turns of the coil are far from the electromagnet but very near to the conductor. Coil dimensions and the other conditions for calculation are shown in Table 2 and Fig. 1. Table 3 and Fig. 3 show B_z and B_r.

Table 2. Coil and Conductor Characteristics

Dimensions, mm	
r_1	10.2870
r_2	14.7955
h_1	0.3429
h_2	0.5969
N, number of turns	7.91667
I_ω, current, A	1790
Frequency, MHz	1.6
σ_1, conductivity, $\Omega^{-1}m^{-1}$	1.351351×10^6
μ_1, permeability, H/m	$4\pi \times 10^{-7}$

Table 3. Stationary Magnetic Flux at Conductor Surface

Position, r (mm)	Flux, Wb/m^2	
	B_z	B_r
8.0	0.285	0.480
9.0	0.205	0.390
10.0	0.145	0.360
10.5	0.113	0.340
11.0	0.080	0.320
11.5	0.053	0.300
12.0	0.025	0.280
12.5	0.005	0.270
13.0	−0.015	0.260
13.5	−0.055	0.255
14.0	−0.095	0.250
14.5	−0.103	0.248
15.0	−0.110	0.245
15.5	−0.110	0.245
16.0	−0.110	0.245

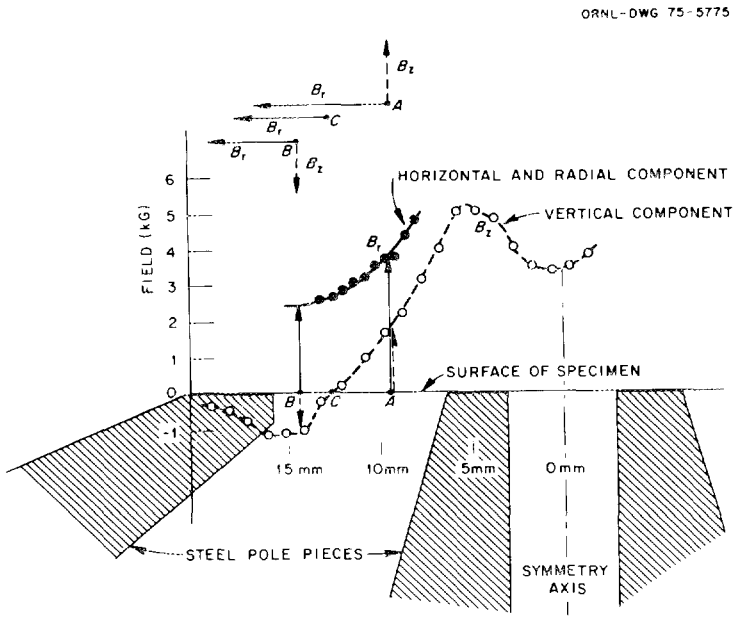

Fig. 3. Magnetic Flux at the Surface of a Nonmagnetic Sample.

The stationary magnetic flux B_z is assumed to have the same values at the conductor surface and at small depths (e.g., 0.5 mm). The same assumption is also taken for B_r. These conditions for coils, conductors, and magnetic flux are taken from experimental work conducted by the author.[10]

The widths of numerical quadrature for the calculation were for the various ranges of ζ: 0–3.5, $d\zeta$ = 0.01; 3.5–9.0, $d\zeta$ = 0.05; 9.0–80.0, $d\zeta$ = 0.1; the upper limit of integration was 80. These conditions for numerical quadruture are enough for accuracy and convergence in evaluating the integral. The Fortran program for a computer is shown in Appendix A.

The results of calculations of the eddy-current density at a sample surface and at a depth of 0.5 mm are shown in Fig. 4. The computer output is shown in Appendix B. The maximum eddy-current density at the surface was about 1.15×10^{10} A/m^2, which is very large but smaller than the current density in the driver coil, about 3.6×10^{10} A/m^2. Notice that the eddy-current density decreases rapidly as the depth increases, because of the skin effect. The force per unit volume was calculated (Appendix B), and the results are shown in Fig. 5. The vertical force, $|F_z|$, has its peak near the outer radius of the driver coil and decreases very rapidly toward the outside and the inside of the driver coil. The horizontal and radial component of the force, $|F_r|$, has zero value and changes its phase at the point where the vertical component of the stationary magnetic flux has zero value (see Figs. 3 and 5).

---

[10]K. Kawashima, *An Electromagnetic Ultrasonic Transducer*, ORNL-TM-5063, August 1975.

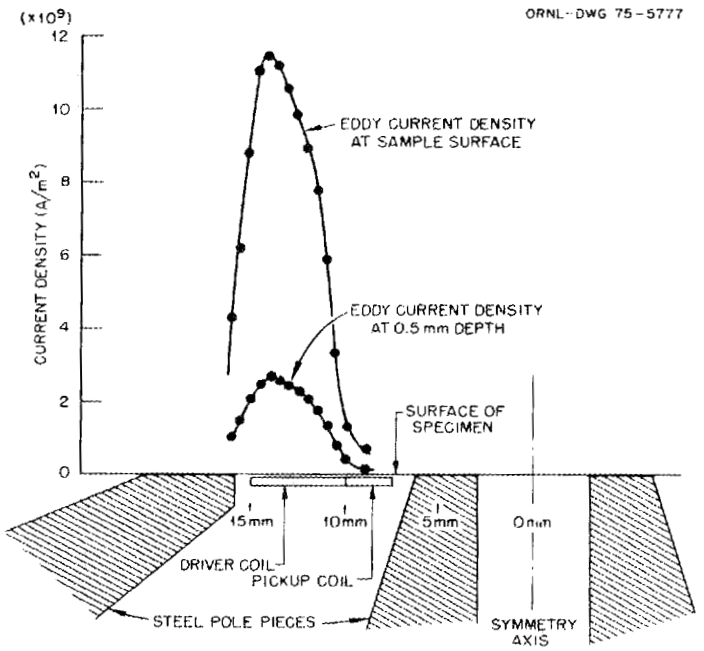

Fig. 4. Eddy-Current Density in a Conductor.

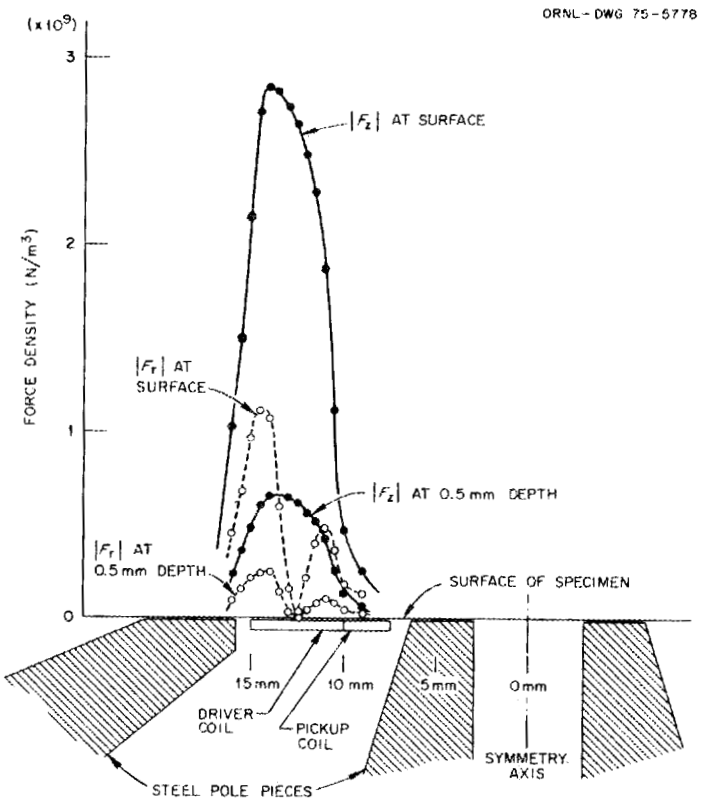

Fig. 5. Electromagnetic Force per Unit Volume Produced by the Electromagnetic Transducer.

Calculation of Surface Forces

The variations of the amplitude and the phases of the forces with depth change are shown in Fig. 6. We know from them that the depth dependence of the force is represented approximately by the following equations:

$$F_{z1\omega} = \left(F_{z1\omega}\right)_{z=0} e^{jk_1 z} e^{k_2 z} \ , \tag{23}$$

$$F_{r1\omega} = \left(F_{r1\omega}\right)_{z=0} e^{jk_3 z} e^{k_4 z} \ . \tag{24}$$

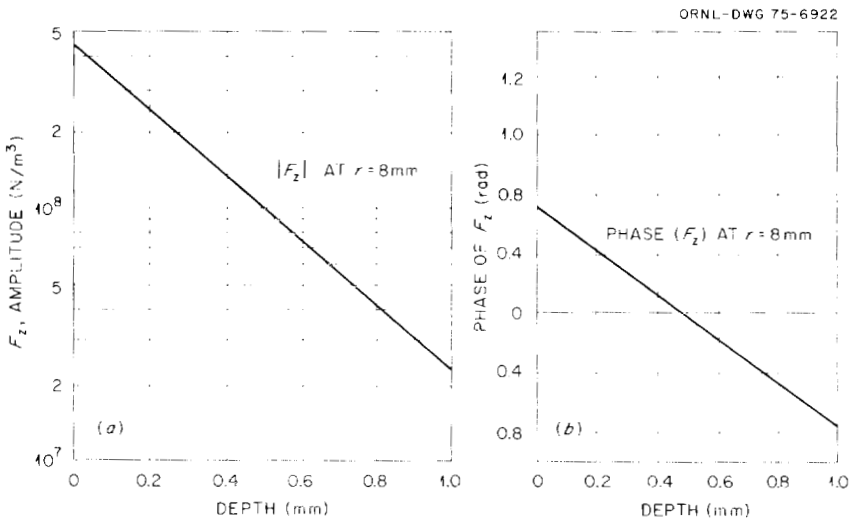

Fig. 6. Dependence of (a) Amplitude and (b) Phase of Volume Force F_z upon depth.

To obtain the equivalent surface force, one has to integrate $\tilde{F}_z$ and $\tilde{F}_r$ with respect to depth from zero to infinity:

$$\begin{aligned}
\tilde{P}_z &= \int_{-\infty}^{0} \tilde{F}_z \, dz \\
&\approx \int_{-\infty}^{0} \tilde{F}_{z1\omega} \, dz \\
&= \int_{-\infty}^{0} \text{Real}\left(F_{z1\omega} e^{j\omega t}\right) dz \\
&= \text{Real}\left[\left(\int_{-\infty}^{0} F_{z1\omega} \, dz\right) e^{j\omega t}\right] ,
\end{aligned} \tag{25}$$

$$\tilde{P}_r \approx \text{Real}\left[\left(\int_{-\infty}^{0} F_{r1\omega}\, dz\right)e^{j\omega t}\right] . \tag{26}$$

It is very time-consuming work to calculate Eqs. (25) and (26) numerically. We can calculate the surface forces, $\tilde{P}_z$ and $\tilde{P}_r$, by a mixture of analytical and numerical methods without losing much computational accuracy by making use of Eqs. (23) and (24).

$$\begin{aligned} P_z &\approx \int_{-\infty}^{0} F_{z1\omega}\, dz \\ &= \int_{-\infty}^{0} \left(F_{z1\omega}\right)_{z=0} e^{jk_1 z} e^{k_2 z}\, dz \\ &= \left(F_{z1\omega}\right)_{z=0} \left[\frac{1}{jk_1 + k_2}\, e^{jk_1 z} e^{k_2 z}\right]_{-\infty}^{0} \\ &= \left(F_{z1\omega}\right)_{z=0} / \left(jk_1 + k_2\right) . \end{aligned} \tag{27}$$

We can obtain k_1 and k_2 by calculating two values of $F_{z1\omega}$ at two different depths chosen arbitrarily. Substituting $(F_{z1\omega})_{z=0}$ and $(F_{z1\omega})_{z=z_1}$, the forces calculated numerically at depths $z = 0$ and $z = z_1$, respectively, into Eq. (23) gives

$$\left(F_{z1\omega}\right)_{z=0} = \left(F_{z1\omega}\right)_{z=0} , \tag{28}$$

$$\left(F_{z1\omega}\right)_{z=z_1} = \left(F_{z1\omega}\right)_{z=0} e^{jk_1 z_1} e^{k_2 z_1} . \tag{29}$$

From these two equations

$$jk_1 + k_2 = \frac{1}{z_1} \ln \frac{\left(F_{z1\omega}\right)_{z=z_1}}{\left(F_{z1\omega}\right)_{z=0}} . \tag{30}$$

Substituting Eq. (30) into Eq. (27) gives

$$P_z = \left(F_{z1\omega}\right)_{z=0} \left[\frac{1}{z_1} \ln \frac{\left(F_{z1\omega}\right)_{z=z_1}}{\left(F_{z1\omega}\right)_{z=0}}\right]^{-1} . \tag{31}$$

Similarly,

$$P_r = \left(F_{r1\omega}\right)_{z=0} \left[\frac{1}{z_1} \ln \frac{\left(F_{r1\omega}\right)_{z=z_1}}{\left(F_{r1\omega}\right)_{z=0}}\right]^{-1} . \tag{32}$$

The surface forces, P_z and P_r, which are obtained through integration of the volume forces with respect to the depth, are shown in Fig. 7 (computer output in Appendix B). According to Figs. 5 and 7, the distribution of the surface forces is almost the same as that of the volume forces. The phase of the vertical surface force, $\mathrm{Ph}(P_z)$, does not change much in the region where the amplitude, $|P_z|$, is large enough to contribute the main part of the ultrasonic field.

The phase of the horizontal and radial surface force, $\mathrm{Ph}(P_r)$, is the same as $\mathrm{Ph}(P_z)$, if the signs of the directions of both depth increase and radius increase are taken as positive. The value of $\mathrm{Ph}(P_r)$ changes by π at the point where B_z changes its sign (see Figs. 3 and 7).

Figure 8 and Table 4 give approximations for surface forces that are used for calculation of the ultrasonic field.

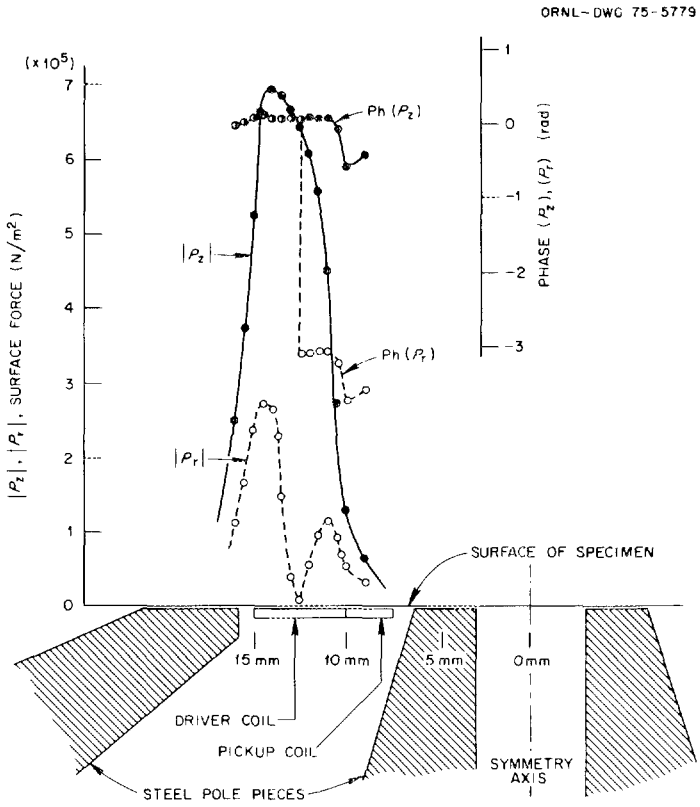

Fig. 7. Surface Forces Obtained Through Integration of Volume Forces of Fig. 5.

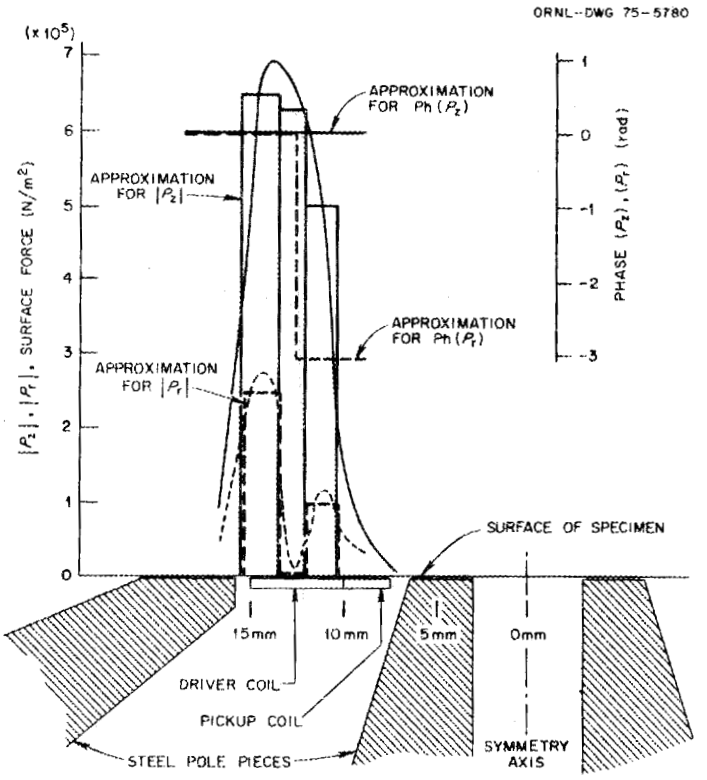

Fig. 8. Approximation of Surface Forces for Ultrasonic Wave Calculation.

Table 4. Approximations to Surface Forces Used in Ultrasonic Wave Calculations

Range of r (mm)	Vertical Amplitude[a] (MN/m^2)	Horizontal Radial	
		Amplitude (MN/m^2)	Phase (rad)
10.3–12	0.5	0.1	$-\pi$
12–13.5	0.63	0	b
13.5–15.5	0.65	0.25	0

[a]The phase of the vertical component is taken as zero everywhere.

[b]The phase of the horizontal radial component changes from $-\pi$ to zero at about 12.7 mm, the point at which the magnetic flux is zero.

Summary of Force Derivation

The forces that give rise to electromagnetically induced ultrasound depend on the vector potential in the specimen; the pertinent variations in this potential are given by Eqs. (11), (12), and (13) on pages 5 and 6. The volume force due to the field from a coil is then given by Eq. (21), p. 7. For the combination of a coil and a particular electromagnet, the volume force shown in Fig. 5 (p. 11) is calculated. These forces fall off rapidly with depth, and can be integrated to give surface forces.

The equivalent surface force exerted by an electromagnetic volume force is

$$\tilde{P}_z = \text{Real}\left(P_z e^{j\omega t}\right) ,$$

$$\tilde{P}_r = \text{Real}\left(P_r e^{j\omega t}\right) ,$$

where

$$\begin{aligned} P_z &= \int_{-\infty}^{0} F_z \, dz \\ &\approx \int_{-\infty}^{0} F_{z1\omega} \, dz \\ &= \int_{-\infty}^{0} -j\omega\sigma A(r,z) \, \frac{\partial A_0(r,z)}{\partial z} \, dz \end{aligned}$$

and

$$\begin{aligned} P_r &= \int_{-\infty}^{0} F_r \, dz \\ &\approx \int_{-\infty}^{0} F_{r1\omega} \, dz \\ &= \int_{-\infty}^{0} -j\omega\sigma A(r,z) \frac{1}{r} \frac{\partial}{\partial r} \, rA_0(r,z) \, dz \, . \end{aligned}$$

Figure 7 gives the surface forces calculated from the volume forces in Fig. 5.

ELASTIC WAVE FROM SURFACE FORCE

Elastic waves that propagate in a semi-infinite elastic space were first investigated by Lamb.[11] In his classical paper he investigated the effect of a vibrating point force on the surface. Miller and Pursey[12] replaced the point source with a disk of time-varying uniform pressure. Bycroft[13] and later Robertson[14] replaced the point force with a forced vertical vibration of a rigid circular disk, which gives rise to a mixed boundary problem. Johnson[15] recently gave a complete and general solution

to the three-dimensional Lamb's problem for a point source by the method of Green's function. In Appendix C, the equations that are suitable for calculation of elastic wave fields produced by eddy-current surface forces are derived by use of a Green's function. A surface force produced by an interaction of a magnetic field and eddy currents has two components. One is a vertical component and the other is a horizontal and radial component. Both forces distribute symmetrically around the axis. (See Fig. 7.)

A displacement of a particle at an arbitrary point in a solid due to the elastic wave from a sinusoidal surface force has four components, S_{zz}, a vertical component from the vertical surface force P_z; S_{rz}, a radial horizontal component from the vertical surface force P_z; S_{zr}, a vertical component from the radial horizontal surface force P_r; and S_{rr}, a radial horizontal component from the radial horizontal surface force P_r.

$$S_z = S_{zz} + S_{zr} = \frac{1}{\mu}\int_0^\infty \frac{\sqrt{\alpha^2 - \kappa_c^2}}{(2\alpha^2 - \kappa_s^2)^2 - 4\alpha^2\sqrt{\alpha^2 - \kappa_c^2}\,\sqrt{\alpha^2 - \kappa_s^2}}\left[(\kappa_s^2 - 2\alpha^2)\exp\left(-\sqrt{\alpha^2 - \kappa_c^2}\,z\right)\right.$$

$$\left. + 2\alpha^2 \exp\left(-\sqrt{\alpha^2 - \kappa_s^2}\,z\right)\right] J_0(\alpha r)\,d\alpha \int_0^\infty P_z(a)\alpha a\, J_0(\alpha a)\,da$$

$$+ \frac{1}{\mu}\int_0^\infty \frac{\alpha}{(2\alpha^2 - \kappa_s^2)^2 - 4\alpha^2\sqrt{\alpha^2 - \kappa_c^2}\,\sqrt{\alpha^2 - \kappa_s^2}}\left[2\sqrt{\alpha^2 - \kappa_c^2}\,\sqrt{\alpha^2 - \kappa_s^2}\,\exp\left(-\sqrt{\alpha^2 - \kappa_c^2}\,z\right)\right.$$

$$\left. + (\kappa_s^2 - 2\alpha^2)\exp\left(-\sqrt{\alpha^2 - \kappa_s^2}\,z\right)\right] J_0(\alpha r)\,d\alpha \int_0^\infty P_r(a)\alpha a\, J_1(\alpha a)\,da\ . \qquad (33)$$

---

[11]H. Lamb, "On the Propagation of Tremors Over the Surface of an Elastic Solid," *Phil. Trans. Roy. Soc. London Ser. A* 203: 1–42 (1904).

[12]F. Miller and H. Pursey, "The Field and Radiation Impedance of Mechanical Radiators on the Free Surface of a Semi-infinite Isotropic Solid," *Proc. Roy. Soc. London Ser. A* 223: 521–41 (1954).

[13]G. N. Bycroft, "Forced Vibrations of Rigid Circular Plate on a Semi-infinite Elastic Space and on an Elastic Stratum," *Phil. Trans. Roy. Soc. London Ser. A* 284: 327–368 (1956).

[14]I. A. Robertson, "Forced Vertical Vibration of a Rigid Circular Disk on a Semi-infinite Elastic Solid," *Proc. Cambridge Phil. Soc.* 62: 547–553 (1966).

[15]L. R. Johnson, "Green's Function for Lamb's Problem," *Geophys. J. Roy. Astron. Soc.* 37: 99–131 (1974).

$$S_r = S_{rz} + S_{rr} = \frac{1}{\mu}\int_0^\infty \frac{\alpha}{(2\alpha^2 - \kappa_s^2)^2 - 4\alpha^2\sqrt{\alpha^2 - \kappa_c^2}\,\sqrt{\alpha^2 - \kappa_s^2}} \left[(\kappa_s^2 - 2\alpha^2)\ \exp\left(-\sqrt{\alpha^2 - \kappa_c^2}\ z\right)\right.$$

$$\left. + 2\sqrt{\alpha^2 - \kappa_c^2}\ \sqrt{\alpha^2 - \kappa_s^2}\ \exp\left(-\sqrt{\alpha^2 - \kappa_s^2}\ z\right)\right] J_1(\alpha r)\,d\alpha \int_0^\infty P_z(a)\,\alpha a\ J_0(\alpha a)\,da$$

$$+ \frac{1}{\mu}\int_0^\infty \frac{\sqrt{\alpha^2 - \kappa_s^2}}{(2\alpha^2 - \kappa_s^2)^2 - 4\alpha^2\sqrt{\alpha^2 - \kappa_c^2}\,\sqrt{\alpha^2 - \kappa_s^2}} \left[2\alpha^2\ \exp\left(-\sqrt{\alpha^2 - \kappa_c^2}\ z\right)\right.$$

$$\left. + (\kappa_s^2 - 2\alpha^2)\ \exp\left(-\sqrt{\alpha^2 - \kappa_s^2}\ z\right)\right] J_1(\alpha r)\,d\alpha \int_0^\infty P_r(a)\,\alpha a\ J_1(\alpha a)\,da\ . \tag{34}$$

The average displacement in a circle of radius a is:

$$\tilde{S}_z(\text{av}) = \text{Real}\left(S_z(\text{av})\ e^{j\omega t}\right)$$

where $$S_z(\text{av}) = \frac{1}{\mu}\int_0^\infty \frac{\sqrt{\alpha^2 - \kappa_c^2}}{(2\alpha^2 - \kappa_s^2)^2 - 4\alpha^2\sqrt{\alpha^2 - \kappa_c^2}\,\sqrt{\alpha^2 - \kappa_s^2}} \left[(\kappa_s^2 - 2\alpha^2)\ \exp\left(-\sqrt{\alpha^2 - \kappa_c^2}\ z\right)\right.$$

$$\left. + 2\alpha^2\ \exp\left(-\sqrt{\alpha^2 - \kappa_s^2}\ z\right)\right] \frac{2J_1(\alpha a)}{\alpha a}\ d\alpha \int_0^\infty P_z(a)\,\alpha a\ J_0(\alpha a)\,da$$

$$+ \frac{1}{\mu}\int_0^\infty \frac{\alpha}{(2\alpha^2 - \kappa_s^2)^2 - 4\alpha^2\sqrt{\alpha^2 - \kappa_c^2}\,\sqrt{\alpha^2 - \kappa_s^2}} \left[2\sqrt{\alpha^2 - \kappa_c^2}\ \sqrt{\alpha^2 - \kappa_s^2}\ \exp\left(-\sqrt{\alpha^2 - \kappa_c^2}\ z\right)\right.$$

$$\left. + (\kappa_s^2 - 2\alpha^2)\ \exp\left(-\sqrt{\alpha^2 - \kappa_s^2}\ z\right)\right] \frac{2J_1(\alpha a)}{\alpha a}\ d\alpha \int_0^\infty P_r(a)\,\alpha a\ J_1(\alpha a)\,da\ . \tag{35}$$

Equations (33) and (34) were derived for a sinusoidal current in the coil. If the current is not sinusoidal, it can be resolved by a Fourier analysis into sinusoidal components, and the actual displacements can then be obtained by summing these equations with appropriate Fourier coefficients. This analysis is outlined in Appendix C for a current that is a repetition of harmonic pulses.

Appendix C also treats the case in which a constant surface force is exerted over a circle of radius a_1:

$$P_z(a) = P_r(a) = \begin{cases} 1\ , & a \leqslant a_1 \\ 0\ , & a > a_1\ . \end{cases}$$

Then Eqs. (33) and (34) can be resolved into

$$S_{zz} = \frac{a_1}{\mu} \int_0^\infty \frac{\sqrt{\alpha^2 - \kappa_c^2}}{(2\alpha^2 - \kappa_s^2)^2 - 4\alpha^2\sqrt{\alpha^2 - \kappa_c^2}\,\sqrt{\alpha^2 - \kappa_s^2}} \left[(\kappa_s^2 - 2\alpha^2)\ \exp\left(-\sqrt{\alpha^2 - \kappa_c^2}\ z\right)\right.$$

$$\left. + 2\alpha^2\ \exp\left(-\sqrt{\alpha^2 - \kappa_s^2}\ z\right)\right] J_0(\alpha r)\ J_1(\alpha a_1)\ d\alpha\ , \tag{36}$$

$$S_{zr} = \frac{a_1}{\mu} \int_0^\infty \frac{\alpha}{(2\alpha^2 - \kappa_s^2)^2 - 4\alpha^2\sqrt{\alpha^2 - \kappa_c^2}\,\sqrt{\alpha^2 - \kappa_s^2}} \left[2\sqrt{\alpha^2 - \kappa_c^2}\ \sqrt{\alpha^2 - \kappa_s^2}\ \exp\left(-\sqrt{\alpha^2 - \kappa_c^2}\ z\right)\right.$$

$$\left. + (\kappa_s^2 - 2\alpha^2)\ \exp\left(-\sqrt{\alpha^2 - \kappa_s^2}\ z\right)\right] J_0(\alpha r)\ \frac{I(\alpha a_1)}{\alpha a_1}\ d\alpha\ , \tag{37}$$

$$S_{rz} = \frac{a_1}{\mu} \int_0^\infty \frac{\alpha}{(2\alpha^2 - \kappa_s^2)^2 - 4\alpha^2\sqrt{\alpha^2 - \kappa_c^2}\,\sqrt{\alpha^2 - \kappa_s^2}} \left[(\kappa_s^2 - 2\alpha^2)\ \exp\left(-\sqrt{\alpha^2 - \kappa_c^2}\ z\right)\right.$$

$$\left. + 2\sqrt{\alpha^2 - \kappa_c^2}\ \sqrt{\alpha^2 - \kappa_s^2}\ \exp\left(-\sqrt{\alpha^2 - \kappa_s^2}\ z\right)\right] J_1(\alpha r) J_1(\alpha a_1)\, d\alpha\ , \tag{38}$$

$$S_{rr} = \frac{a_1}{\mu} \int_0^\infty \frac{\sqrt{\alpha^2 - \kappa_s^2}}{(2\alpha^2 - \kappa_s^2)^2 - 4\alpha^2\sqrt{\alpha^2 - \kappa_c^2}\,\sqrt{\alpha^2 - \kappa_s^2}} \left[2\alpha^2\ \exp\left(-\sqrt{\alpha^2 - \kappa_c^2}\right)\right.$$

$$\left. + (\kappa_s^2 - 2\alpha^2)\ \exp\left(-\sqrt{\alpha^2 - \kappa_s^2}\ z\right)\right] J_1(\alpha r)\ \frac{I(\alpha a_1)}{\alpha a_1}\ d\alpha\ , \tag{39}$$

where

$$I(\alpha a_1) = \int_0^{\alpha a_1} p\ J_1(p)\ dp\ .$$

NUMERICAL CALCULATION OF ELASTIC WAVES

Method of Numerical Calculation

We assume $P_z(a)$ and $P_r(a)$ are constant between $a = a_i$ and $a = a_{i+1}$; then

$$\int_0^\infty P_z(a)\alpha a\, J_0(\alpha a)\, da = \sum_{i=0}^{\infty}\int_{a_i}^{a_{i+1}} P_z\left(\frac{a_i + a_{i+1}}{2}\right)\alpha a\, J_0(\alpha a)\, da$$

$$= \sum_{i=0}^{\infty} P_z\left(\frac{a_i + a_{i+1}}{2}\right)\int_{a_i}^{a_{i+1}} \alpha a\, J_0(\alpha a)\, da$$

$$= \sum_{i=0}^{\infty} P_z\left(\frac{a_i + a_{i+1}}{2}\right)\int_{\alpha a_i}^{\alpha a_{i+1}} \frac{1}{\alpha}\, p\, J_0(p)\, dp \qquad (p = \alpha a)$$

$$= \sum_{i=0}^{\infty} P_z\left(\frac{a_i + a_{i+1}}{2}\right)\frac{1}{\alpha}\int_{\alpha a_i}^{\alpha a_{i+1}} \frac{d}{dp}\left[p\, J_1(p)\right] dp$$

$$= \sum_{i=0}^{\infty} P_z\left(\frac{a_i + a_{i+1}}{2}\right)\frac{1}{\alpha}\left[\alpha a_{i+1} J_1(\alpha a_{i+1}) - \alpha a_i\, J_1(\alpha a_i)\right] , \qquad (40)$$

since

$$\alpha a_i\, J_1(\alpha a_i) = \int_0^{\alpha a_i} p\, J_0(p)\, dp .$$

Similarly,

$$\int_0^\infty P_r(a)\alpha a\, J_1(\alpha a)\, da = \sum_{i=0}^{\infty}\int_{a_i}^{a_{i+1}} P_r\left(\frac{a_i + a_{i+1}}{2}\right)\alpha a\, J_1(\alpha a)\, da$$

$$= \sum_{i=0}^{\infty} P_r\left(\frac{a_i + a_{i+1}}{2}\right)\int_{a_i}^{a_{i+1}} \alpha a\, J_1(\alpha a)\, da$$

$$= \sum_{i=0}^{\infty} P_r\left(\frac{a_i + a_{i+1}}{2}\right)\int_{\alpha a_i}^{\alpha a_{i+1}} \frac{1}{\alpha}\, p\, J_1(p)\, dp$$

$$= \sum_{i=0}^{\infty} P_r\left(\frac{a_i + a_{i+1}}{2}\right)\frac{1}{\alpha}\left[I(\alpha a_{i+1}) - I(\alpha a_i)\right] , \qquad (41)$$

where

$$I(\alpha a_i) = \int_0^{\alpha a_i} pJ_1(p)\, dp \ .$$

Substituting Eqs. (40) and (41) into Eqs. (33) and (34), we have

$$S_z = \frac{1}{\mu}\sum_{i=0}^{\infty} P_z\left(\frac{a_i + a_{i+1}}{2}\right)\int_0^{\infty} \frac{\sqrt{\alpha^2 - \kappa_c^2}/\alpha}{(2\alpha^2 - \kappa_s^2)^2 - 4\alpha^2\sqrt{\alpha^2 - \kappa_c^2}\,\sqrt{\alpha^2 - \kappa_s^2}}\left[(\kappa_s^2 - 2\alpha^2)\exp\left(-\sqrt{\alpha^2 - \kappa_c^2}\, z\right)\right.$$

$$\left. + 2\alpha^2 \exp\left(-\sqrt{\alpha^2 - \kappa_s^2}\, z\right)\right] J_0(\alpha r)\left[\alpha a_{i+1}J_1(\alpha a_{i+1}) - \alpha a_i J_1(\alpha a_i)\right] d\alpha$$

$$+ \frac{1}{\mu}\sum_{i=0}^{\infty} P_r\left(\frac{a_i + a_{i+1}}{2}\right)\int_0^{\infty} \frac{1}{(2\alpha^2 - \kappa_s^2)^2 - 4\alpha^2\sqrt{\alpha^2 - \kappa_c^2}\,\sqrt{\alpha^2 - \kappa_s^2}}\left[2\sqrt{\alpha^2 - \kappa_c^2}\,\sqrt{\alpha^2 - \kappa_s^2}\right.$$

$$\left. \times \exp\left(-\sqrt{\alpha^2 - \kappa_c^2}\, z\right) + (\kappa_s^2 - 2\alpha^2)\exp\left(-\sqrt{\alpha^2 - \kappa_s^2}\, z\right)\right] J_0(\alpha r)\left[I(\alpha a_{i+1}) - I(\alpha a_i)\right] d\alpha \ , \tag{42}$$

$$S_r = \frac{1}{\mu}\sum_{i=0}^{\infty} P_z\left(\frac{a_i + a_{i+1}}{2}\right)\int_0^{\infty} \frac{1}{(2\alpha^2 - \kappa_s^2)^2 - 4\alpha^2\sqrt{\alpha^2 - \kappa_c^2}\,\sqrt{\alpha^2 - \kappa_s^2}}\left[(\kappa_s^2 - 2\alpha^2)\exp\left(-\sqrt{\alpha^2 - \kappa_c^2}\, z\right)\right.$$

$$\left. + 2\sqrt{\alpha^2 - \kappa_c^2}\,\sqrt{\alpha^2 - \kappa_s^2}\exp\left(-\sqrt{\alpha^2 - \kappa_s^2}\, z\right)\right] J_1(\alpha r)\left[\alpha a_{i+1}J_1(\alpha a_{i+1}) - \alpha a_i J_1(\alpha a_i)\right] d\alpha$$

$$+ \frac{1}{\mu}\sum_{i=0}^{\infty} P_r\left(\frac{a_i + a_{i+1}}{2}\right)\int_0^{\infty} \frac{\sqrt{\alpha^2 - \kappa_s^2}/\alpha}{(2\alpha^2 - \kappa_s^2)^2 - 4\alpha^2\sqrt{\alpha^2 - \kappa_c^2}\,\sqrt{\alpha^2 - \kappa_s^2}}\left[2\alpha^2 \exp\left(-\sqrt{\alpha^2 - \kappa_c^2}\, z\right)\right.$$

$$\left. + (\kappa_s^2 - 2\alpha^2)\exp\left(-\sqrt{\alpha^2 - \kappa_s^2}\, z\right)\right] J_1(\alpha r)\left[I(\alpha a_{i+1}) - I(\alpha a_i)\right] d\alpha \ . \tag{43}$$

After all lengths except S_z and S_r are multiplied by κ_c and α is divided by κ_c, Eqs. (42) and (43) become

$$S_z = S_{zz} + S_{zr}$$

$$= \frac{1}{\mu\kappa_c} \sum_{i=0}^{\infty} P_z\left(\frac{a_i + a_{i+1}}{2}\right) \int_0^{\infty} \frac{\sqrt{\alpha^2 - 1}/\alpha}{(2\alpha^2 - \kappa^2)^2 - 4\alpha^2 \sqrt{\alpha^2 - 1}\sqrt{\alpha^2 - \kappa^2}} \Big[(\kappa^2 - 2\alpha^2) \exp(-\sqrt{\alpha^2 - 1}\, z)$$

$$+ 2\alpha^2 \exp(-\sqrt{\alpha^2 - \kappa^2}\, z)\Big] J_0(\alpha r)\Big[\alpha a_{i+1} J_1(\alpha a_{i+1}) - \alpha a_i J_1(\alpha a_i)\Big]\, d\alpha$$

$$+ \frac{1}{\mu\kappa_c} \sum_{i=0}^{\infty} P_r\left(\frac{a_i + a_{i+1}}{2}\right) \int_0^{\infty} \frac{1}{(2\alpha^2 - \kappa^2)^2 - 4\alpha^2 \sqrt{\alpha^2 - 1}\sqrt{\alpha^2 - \kappa^2}} \Big[2\sqrt{\alpha^2 - 1}\sqrt{\alpha^2 - \kappa^2}$$

$$\times \exp(-\sqrt{\alpha^2 - 1}\, z) + (\kappa^2 - 2\alpha^2) \exp(-\sqrt{\alpha^2 - \kappa^2}\, z)\Big] J_0(\alpha r)\Big[I(\alpha a_{i+1}) - I(\alpha a_i)\Big]\, d\alpha\ , \qquad (44)$$

$$S_r = S_{rz} + S_{rr}$$

$$= \frac{1}{\mu\kappa_c} \sum_{i=0}^{\infty} P_z\left(\frac{a_i + a_{i+1}}{2}\right) \int_0^{\infty} \frac{1}{(2\alpha^2 - \kappa^2)^2 - 4\alpha^2 \sqrt{\alpha^2 - 1}\sqrt{\alpha^2 - \kappa^2}} \Big[(\kappa^2 - 2\alpha^2) \exp(-\sqrt{\alpha^2 - 1}\, z)$$

$$+ 2\sqrt{\alpha^2 - 1}\sqrt{\alpha^2 - \kappa^2} \exp(-\sqrt{\alpha^2 - \kappa^2}\, z)\Big] J_1(\alpha r)\Big[\alpha a_{i+1} J_1(\alpha a_{i+1}) - \alpha a_i J_1(\alpha a_i)\Big]\, d\alpha$$

$$+ \frac{1}{\mu\kappa_c} \sum_{i=0}^{\infty} P_r\left(\frac{a_i + a_{i+1}}{2}\right) \int_0^{\infty} \frac{\sqrt{\alpha^2 - \kappa^2}/\alpha}{(2\alpha^2 - \kappa^2)^2 - 4\alpha^2 \sqrt{\alpha^2 - 1}\sqrt{\alpha^2 - \kappa^2}} \Big[2\alpha^2 \exp(-\sqrt{\alpha^2 - 1}\, z)$$

$$+ (\kappa^2 - 2\alpha^2) \exp(-\sqrt{\alpha^2 - \kappa^2}\, z)\Big] J_1(\alpha r)\Big[I(\alpha a_{i+1}) - I(\alpha a_i)\Big]\, d\alpha\ . \qquad (45)$$

The first term of Eq. (44) can be resolved into two terms:

$$S_{zz} = S_{zz\ell} + S_{zzs}$$

$$= \frac{1}{\mu\kappa_c} \sum_{i=0}^{\infty} P_z \left(\frac{a_i + a_{i+1}}{2}\right) \int_0^{\infty} \frac{\sqrt{\alpha^2 - 1}/\alpha}{(2\alpha^2 - \kappa^2)^2 - 4\alpha^2\sqrt{\alpha^2 - 1}\ \sqrt{\alpha^2 - \kappa^2}} \left[(\kappa^2 - 2\alpha^2)\ \exp(-\sqrt{\alpha^2 - 1}\ z)\right]$$

$$\times J_0(\alpha r)\left[\alpha a_{i+1} J_1(\alpha a_{i+1}) - \alpha a_i J_1(\alpha a_i)\right]\ d\alpha$$

$$+ \frac{1}{\mu\kappa_c} \sum_{i=0}^{\infty} P_z \left(\frac{a_i + a_{i+1}}{2}\right) \int_0^{\infty} \frac{\sqrt{\alpha^2 - 1}/\alpha}{(2\alpha^2 - \kappa^2)^2 - 4\alpha^2\sqrt{\alpha^2 - 1}\ \sqrt{\alpha^2 - \kappa^2}}\ 2\alpha^2\ \exp(-\sqrt{\alpha^2 - 1}\ z)$$

$$\times J_0(\alpha r)\left[\alpha a_{i+1} J_1(\alpha a_{i+1}) - \alpha a_i J_1(\alpha a_i)\right]\ d\alpha$$

$$= \frac{1}{\mu\kappa_c} \sum_{i=0}^{\infty} P_z \left(\frac{a_i + a_{i+1}}{2}\right) \left[\int_0^{\infty} \phi_{zz\ell}(\alpha)\ d\alpha + \int_0^{\infty} \phi_{zzs}(\alpha)\ d\alpha\right] . \tag{46}$$

The term $S_{zz\ell}$ is considered to come from $\partial\phi_{11}/\partial z$, and S_{zzs} from $(1/r)\partial(rW_{11})/\partial r$. Equation (46) helps us to understand the inseparability of the displacement vector into longitudinal and transverse wave components.

When z = zero, we can easily see that $S_{zz\ell}$ and S_{zzs} do not have finite values. If α is very large, the function to be integrated becomes

$$\left[\phi_{zz\ell}(\alpha)\right]_{z=0} = \frac{\sqrt{\alpha^2 - 1}/\alpha}{(2\alpha^2 - \kappa^2)^2 - 4\alpha^2\sqrt{\alpha^2 - 1}\ \sqrt{\alpha^2 - \kappa^2}}\ (\kappa^2 - 2\alpha^2)$$

$$\times J_0(\alpha r)\left[\alpha a_{i+1} J_1(\alpha a_{i+1}) - \alpha a_i J_1(\alpha a_i)\right] .$$

Bessel functions decrease approximately proportional to $1/\sqrt{\alpha}$, and so

$$\lim_{\alpha\to\infty}\left[\phi_{zz\ell}(\alpha)\right]_{z=0} \propto \frac{\alpha(1-1/2\alpha^2)/\alpha}{4\alpha^4+\kappa^4-4\alpha^2\kappa^2-4\alpha^4(1-1/2\alpha^2-\kappa^2/2\alpha^2)}\,(\kappa^2-2\alpha^2)$$

$$\times\, 1/\sqrt{\alpha}\;\;\alpha\;1/\sqrt{\alpha}$$

$$= \frac{1}{\kappa^4-4\alpha^2\kappa^2+2\alpha^2+2\alpha^2\kappa^2}\,(\kappa^2-2\alpha^2)$$

$$= \frac{\kappa^2-2\alpha^2}{2\alpha^2(1-\kappa^2)+\kappa^4}$$

$$\approx -1/(1-\kappa^2)\ . \tag{47}$$

Equation (47) shows that the integral fluctuates. When both z and r are zero, it is easy to see that the integral diverges. In a similar manner $\phi zzs(\alpha)$ can be shown to have divergent values. However, if we take a sum of $S_{zz\ell}$ and S_{zzs} (that is, S_{zz}), then $(\kappa^2-2\alpha^2)$ and $2\alpha^2$ cancel each other, leaving only κ^2 in Eq. (44), and convergence is assured.

Some equations similar to Eqs. (44) and (45) are seen in seismology, and they are considered exceedingly difficult to evaluate numerically.

The distance between a source of elastic waves and an observation point is usually very large in the case of seismology; consequently, Bessel functions and trigonometric functions [which are derived from $\exp(-\sqrt{\alpha^2-\kappa_c^2}\,z)$ and $\exp(-\sqrt{\alpha^2-\kappa_s^2}\,z)$ when α is smaller than κ_c and κ_s] fluctuate very rapidly to make numerical evaluation difficult. Instead of numerical calculation, the equations are approximately evaluated by the method of complex contour integrals, which is valid for large values of distance. If the distance is as small as several centimeters, the fluctuation is not very rapid and we can evaluate the equations by numerical calculations.

The first term, S_{zz}, of Eq. (44) is considered in detail. All the other terms of Eqs. (44) and (45) are calculated similarly.

$$S_{zz} = \frac{1}{\mu\kappa_c} \sum_{i=0}^{\infty} P_z \left(\frac{a_i + a_{i+1}}{2}\right) \int_0^{\infty} \frac{\sqrt{\alpha^2 - 1}/\alpha}{(2\alpha^2 - \kappa^2)^2 - 4\alpha^2\sqrt{\alpha^2 - 1}\,\sqrt{\alpha^2 - \kappa^2}} \left[(\kappa^2 - 2\alpha^2)\ \exp(-\sqrt{\alpha^2 - 1}\ z)\right.$$

$$\left. + 2\alpha^2\ \exp(-\sqrt{\alpha^2 - \kappa^2}\ z)\right] J_0(\alpha r) \left[\alpha a_{i+1} J_1(\alpha a_{i+1}) - \alpha a_i J_1(\alpha a_i)\right] d\alpha$$

$$= \frac{1}{\mu\kappa_c} \sum_{i=0}^{\infty} P_z \left(\frac{a_i + a_{i+1}}{2}\right) \int_0^{\infty} \phi(\alpha)\ d\alpha$$

$$= \frac{1}{\mu\kappa_c} \sum_{i=0}^{\infty} P_z \left(\frac{a_i + a_{i+1}}{2}\right) \int_0^{\infty} \frac{h(\alpha)}{\Delta(\alpha)}\ d\alpha \quad .$$

Only principal values of radicals are used for numerical integration. This is necessary for the wave traveling from the source toward infinity and also absolutely necessary for the convergence of integration:

$$\sqrt{\alpha^2 - 1} = \begin{cases} j\sqrt{1 - \alpha^2} & 0 \leqslant \alpha \leqslant 1 \\ \sqrt{\alpha^2 - 1} & 1 \leqslant \alpha \end{cases} ,$$

$$\sqrt{\alpha^2 - \kappa^2} = \begin{cases} j\sqrt{\kappa^2 - \alpha^2} & 0 \leqslant \alpha \leqslant \kappa \\ \sqrt{\alpha^2 - \kappa^2} & \kappa \leqslant \alpha \end{cases} .$$

The integration has three singular points, $\alpha = 1$, κ, and p. Obviously, $\alpha = 1$ and κ are the zeroes of $\sqrt{\alpha^2 - 1}$ and $\sqrt{\alpha^2 - \kappa^2}$, respectively, and p is one of the roots of

$$\Delta(\alpha) = (2\alpha^2 - \kappa^2)^2 - 4\alpha^2\sqrt{\alpha^2 - \kappa^2}\ \sqrt{\alpha^2 - 1} = 0 \ (\kappa \approx 2) \ . \tag{48}$$

To ensure the continuity of the integral at the three singular points, the integral is evaluated on a complex plane ($\eta = \alpha + j\beta$). The contour of integration avoids the three points, as shown in Fig. 9.

ORNL-DWG 75-6919

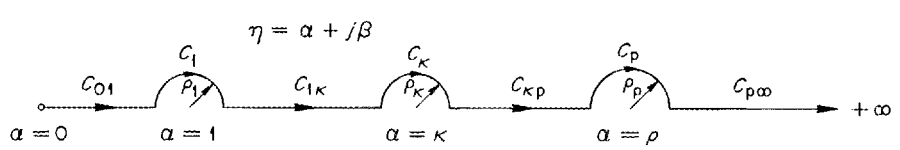

Fig. 9. Path of Integration in the Complex Plane.

Then S_{zz} is obtained as the limiting value of the complex contour integral:

$$S_{zz} = \lim_{\rho_1 \to 0,\ \rho_k \to 0,\ \rho_p \to 0} \frac{1}{\mu\kappa_c} \sum_{i=0}^{\infty} P_z \left(\frac{a_i + a_{i+1}}{2} \right) \int_C \phi(\eta)\ d\eta \ ,$$

$$C = C_{01} + C_1 + C_{1K} + C_K + C_{Kp} + C_p + C_{p\infty} \ .$$

$$\text{Then } S_{zz} = \frac{1}{\mu\kappa_c} \sum_{i=0}^{\infty} P_z \left(\frac{a_i + a_{i+1}}{2} \right) \left[\lim_{\rho_1 \to 0} \int_0^{1 - \rho_1} \phi(\alpha)\ d\alpha + \lim_{\rho_1 \to 0} \int_{C_1} \phi(\eta)\ d\eta \right.$$

$$+ \lim_{\rho_1,\ \rho_K \to 0} \int_{1 + \rho_1}^{K - \rho_K} \phi(\alpha)\ d\alpha + \lim_{\rho_K \to 0} \int_{C_K} \phi(\eta)\ d\eta$$

$$+ \lim_{\rho_K,\ \rho_p \to 0} \int_{K + \rho_K}^{p - \rho_p} \phi(\alpha)\ d\alpha + \lim_{\rho_p \to 0} \int_{C_p} \phi(\eta)\ d\eta$$

$$\left. + \lim_{\rho_p \to 0} \int_{p + \rho_p}^{\infty} \phi(\alpha)\ d\alpha \right] \ . \tag{49}$$

While the second and fourth integrals of Eq. (49) have zero value as ρ_1 and ρ_K tend to zero, the sixth term approaches a finite value as ρ_p tends to zero. We assume ρ_p to have a small finite value, and α_∞ is introduced as an upper limit of integration for the numerical calculation. Therefore,

$$S_{zz} \approx \frac{1}{\mu\kappa_c} \sum_{i=0}^{\infty} P_z \left(\frac{a_i + a_{i+1}}{2} \right) \left[\int_0^1 \phi(\alpha)\ d\alpha + \int_1^K \phi(\alpha)\ d\alpha + \int_K^{p - \rho_p} \phi(\alpha)\ d\alpha \right.$$

$$\left. + \int_{C_p} \phi(\eta)\ d\eta + \int_{p + \rho_p}^{\alpha_\infty} \phi(\alpha)\ d\alpha \right] \ . \tag{50}$$

The fourth term of Eq. (50) is represented as

$$S_{zzCp} = \int_{C_p} \phi(\eta)\ d\eta$$

$$= \int_{C_p} \frac{h(\eta)}{\Delta(\eta)}\ d\eta$$

$$= \int_{C_p} \frac{H(\eta)}{(\eta - p)}\ d\eta\ . \tag{51}$$

Next, $H(\eta)$ is represented by the Taylor series expansion around the point $\eta = p$:

$$H(\eta) = H(p) + H'(p)(\eta - p) + \frac{1}{2!} H''(p)(\eta - p)^2 + \frac{1}{3!} H'''(p)(\eta - p)^3$$

$$+ \ . \ . \ . \ . \tag{52}$$

Substituting Eq. (52) into Eq. (51) gives

$$S_{zzCp} = \int_{C_p} \frac{H(p)}{\eta - p}\ d\eta + \int_{C_p} H'(p)\ d\eta + \int_{C_p} \frac{1}{2!} H''(p)(\eta - p)\ d\eta$$

$$+ \int_{C_p} \frac{1}{3!} H'''(p)(\eta - p)^2\ d\eta + \ . \ . \ . \ . \tag{53}$$

Replacing η of Eq. (53) with $p + \rho_p e^{j\theta}$ gives

$$S_{zzCp} = \int_{\pi}^{0} \frac{H(p)}{\rho_p e^{j\theta}} j\rho_p e^{j\theta}\ d\theta + \int_{\pi}^{0} H'(p) j\rho_p e^{j\theta}\ d\theta$$

$$+ \int_{\pi}^{0} \frac{1}{2!} H''(p) \rho_p e^{j\theta} j\rho_p e^{j\theta}\ d\theta + \int_{\pi}^{0} \frac{1}{3!} H'''(p) \rho_p{}^2 e^{2j\theta} j\rho_p e^{j\theta}\ d\theta$$

$$+ \ . \ . \ .$$

(continued)

$$= jH(p)\int_{\pi}^{0} d\theta + j\rho_p H'(p)\int_{\pi}^{0} e^{j\theta}\, d\theta$$

$$+ \frac{1}{2!} j\rho_p{}^2 H''(p)\int_{\pi}^{0} e^{2j\theta}\, d\theta + \frac{1}{3!}\, j\rho_p{}^3 H'''(p)\int_{\pi}^{0} e^{3j\theta}\, d\theta$$

$$+ \; . \; . \; .$$

$$= jH(p)\Big[\theta\Big]_{\pi}^{0} + j\rho_p H'(p)\Big[\frac{1}{j}e^{j\theta}\Big]_{\pi}^{0}$$

$$+ \frac{1}{2!}\, j\rho_p{}^2 H''(p)\Big[\frac{1}{2j}e^{2j\theta}\Big]_{\pi}^{0} + \frac{1}{3!}\, j\rho_p{}^3 H'''(p)\Big[\frac{1}{3j}e^{3j\theta}\Big]_{\pi}^{0}$$

$$+ \; . \; . \; .$$

$$= -\, j\pi H(p) + 2\rho_p H'(p) + \frac{1}{9}\rho_p{}^3 H'''(p) + \; . \; . \; . \; . \tag{54}$$

We chose the value of ρ_p small enough to neglect the third term of Eq. (54). Then $H(p)$ and $H'(p)$ are modified as follows:

$$H(\eta) = (\eta - p)\phi(\eta)$$

$$= (\eta - p)h(\eta)/\Delta(\eta) \;; \tag{55}$$

$\Delta(\eta)$ is represented by the Taylor series expansion around the point $\eta = p$:

$$\Delta(\eta) = \Delta(p) + \Delta'(p)(\eta - p) + \frac{1}{2!}\Delta''(p)(\eta - p)^2 + \frac{1}{3!}\Delta'''(p)(\eta - p)^3$$

$$+ \ldots$$

$$= \Delta'(p)(\eta - p) + \frac{1}{2!}\Delta''(p)(\eta - p)^2 + \frac{1}{3!}\Delta'''(p)(\eta - p)^3 + \ldots \quad (56)$$

Substituting Eq. (56) into Eq. (55) gives

$$H(\eta) = (\eta - p)\frac{h(\eta)}{\Delta'(p)(\eta - p) + \frac{1}{2!}\Delta''(p)(\eta - p)^2 + \frac{1}{3!}\Delta'''(p)(\eta - p)^3 + \ldots},$$

$$= \frac{h(\eta)}{\Delta'(p) + \frac{1}{2!}\Delta''(p)(\eta - p) + \frac{1}{3!}\Delta'''(p)(\eta - p)^2 + \ldots}. \quad (57)$$

Therefore,

$$H(p) = h(p)/\Delta'(p) \quad (58)$$

Taking the derivative of Eq. (57) gives

$$H'(\eta) = \frac{h'(\eta)\left[\Delta'(p) + \frac{1}{2!}\Delta''(p)(\eta - p) + \frac{1}{3!}\Delta'''(p)(\eta - p)^2 + \ldots\right] - h(\eta)\left[\frac{1}{2!}\Delta''(p) + \frac{2}{3!}\Delta'''(p)(\eta - p) + \ldots\right]}{\left[\Delta'(p) + \frac{1}{2!}\Delta''(p)(\eta - p) + \frac{1}{3!}\Delta'''(p)(\eta - p)^2 + \ldots\right]^2},$$

so

$$H'(p) = \frac{h'(p)\Delta'(p) - h(p)\,\frac{1}{2!}\Delta''(p)}{\left[\Delta'(p)\right]^2}. \quad (59)$$

Substituting $H(p)$ and $H'(p)$ into Eq. (54) gives

$$S_{zzCp} \approx -j\pi H(p) + 2\rho_p H'(p)$$

$$= -j\pi\frac{h(p)}{\Delta'(p)} + 2\rho_p\frac{h'(p)\Delta'(p) - h(p)\,\frac{1}{2!}\Delta''(p)}{\left[\Delta'(p)\right]^2}. \quad (60)$$

Substituting Eq. (60) into Eq. (50) gives

$$
\begin{aligned}
S_{zz} = \frac{1}{\mu\kappa_c} \sum_{i=0}^{\infty} P_z\left(\frac{a_i + a_{i+1}}{2}\right) \Bigg\{ & \int_0^1 \frac{j\sqrt{1-\alpha^2}/\alpha}{(2\alpha^2-\kappa^2)^2 + 4\alpha^2\sqrt{1-\alpha^2}\,\sqrt{\kappa^2-\alpha^2}} \Big[(\kappa^2 - 2\alpha^2)\exp(-j\sqrt{1-\alpha^2}\,z) \\
& + 2\alpha^2 \exp(-j\sqrt{\kappa^2-\alpha^2}\,z)\Big] J_0(\alpha r)\Big[\alpha a_{i+1} J_1(\alpha a_{i+1}) - \alpha a_i J_1(\alpha a_i)\Big]\, d\alpha \\
& + \int_1^{\kappa} \frac{\sqrt{\alpha^2-1}/\alpha}{(2\alpha^2-\kappa^2)^2 - 4j\alpha^2\sqrt{\alpha^2-1}\,\sqrt{\kappa^2-\alpha^2}} \Big[(\kappa^2 - 2\alpha^2)\exp(-\sqrt{\alpha^2-1}\,z) \\
& + 2\alpha^2 \exp(-j\sqrt{\kappa^2-\alpha^2}\,z)\Big] J_0(\alpha r)\Big[\alpha a_{i+1} J_1(\alpha a_{i+1}) - \alpha a_i J_1(\alpha a_i)\Big]\, d\alpha \\
& + \int_{\kappa}^{p-\rho_p} \frac{\sqrt{\alpha^2-1}/\alpha}{(2\alpha^2-\kappa^2)^2 - 4\alpha^2\sqrt{\alpha^2-1}\,\sqrt{\alpha^2-\kappa^2}} \Big[(\kappa^2 - 2\alpha^2)\exp(-\sqrt{\alpha^2-1}\,z) \\
& + 2\alpha^2 \exp(-\sqrt{\alpha^2-\kappa^2}\,z)\Big] J_0(\alpha r)\Big[\alpha a_{i+1} J_1(\alpha a_{i+1}) - \alpha a_i J_1(\alpha a_i)\Big]\, d\alpha \\
& - j\pi \frac{h(p)}{\Delta'(p)} + 2\rho_p \frac{h'(p)\Delta'(p) - h(p)\Delta''(p)/2!}{\left[\Delta'(p)\right]^2} \\
& + \int_{p+\rho_p}^{\alpha_\infty} \frac{\sqrt{\alpha^2-1}/\alpha}{(2\alpha^2-\kappa^2)^2 - 4\alpha^2\sqrt{\alpha^2-1}\,\sqrt{\alpha^2-\kappa^2}} \Big[(\kappa^2 - 2\alpha^2)\exp(-\sqrt{\alpha^2-1}\,z) \\
& + 2\alpha^2 \exp(-\sqrt{\alpha^2-\kappa^2}\,z)\Big] J_0(\alpha r)\Big[\alpha a_{i+1} J_1(\alpha a_{i+1}) - \alpha a_i J_1(\alpha a_i)\Big]\, d\alpha \Bigg\} .
\end{aligned}
\tag{61}
$$

Equation (60) is negligible when z is large, but it increases as z decreases, and it is especially important when z is very small or zero because most of the imaginary part of Eq. (61) comes from Eq. (60).

Throughout the whole integration range, Bessel functions fluctuate at the same rates, which are approximately $2\pi/\alpha_i$ for $J_1(\alpha a_i)$ and $2\pi/r$ for $J_0(\alpha r)$. The exponentials $\exp(-j\sqrt{1-\alpha^2}\,z)$ and $\exp(-j\sqrt{\kappa^2-\alpha^2}\,z)$ fluctuate very rapidly when α is slightly less than 1 and α is slightly less than κ, respectively. Upon evaluating the integrals by numerical quadrature, the width of quadrature, $\Delta\alpha$, is changed according to the change of the fluctuation rates of $\exp(-j\sqrt{1-\alpha^2}\,z)$ and $\exp(-j\sqrt{\kappa^2-\alpha^2}\,z)$. Also $\Delta\alpha$ is kept small enough to be able to follow the fluctuations of the Bessel functions and the other terms in the integration.

Calculation of Elastic Wave Exerted by Uniform Surface Force

Equations (44) and (45) are numerically evaluated for a simple case, in which the surface force has uniform vertical and radial components in a circular area of radius a, as illustrated by Fig. 10. In such a case, Eq. (44) is considered to be the sum of Eqs. (36) and (37), and Eq. (45) is considered to be the sum of Eqs. (38) and (39). The calculation assumes a hypothetical metal resembling aluminum, with properties shown in Table 5 along with other quantities used in the numerical integration.

ORNL-DWG 75-6918

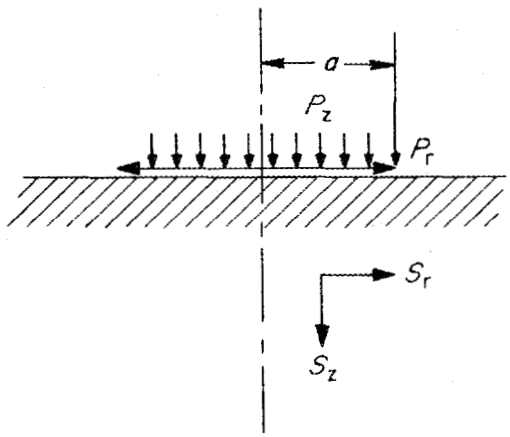

Fig. 10. Uniform Surface Force Over a Circular Area.

Table 5. Numerical Values Used in Calculation

Quantity	Value
ρ, density, kg/m^3	2.7×10^3
Lamé constants, kg m^{-1} sec^{-2}	
μ	2.5947×10^{10}
λ	5.1894×10^{10}
Wave velocity m/sec	
Longitudinal, $C_\ell = \sqrt{(\lambda + 2\mu)/\rho}$	6200
Transverse, $C_t = \sqrt{\mu/\rho}$	3100
Surface force, $\tilde{P}_z$ or $\tilde{P}_r$, N/m^2	
Inside circular coil	$\cos \omega t$
Outside circular coil	0
Angular frequency ω, rad/sec	$2\pi \times 10^6$
Real positive root of $\Delta(\alpha) = 0$	$p = 2.1447125$

The integrals are evaluated for the conditions shown in Table 5 by numerical quadrature. Trial numerical calculations were carried out for various values of the upper limit of integration (α_∞) and the width of numerical quadrature ($\Delta\alpha$) to test the convergence of the integrals and to obtain necessary accuracy. The range of integration was divided into several intervals, as shown in Table 6. The width of quadrature at any value of α was taken as the least of the following:

$\Delta\alpha_1$ = a constant for each interval (values are given in Table 6),

$$\Delta\alpha_2 = 2\pi/50(r + \alpha),$$

$$\Delta\alpha_3 = \begin{cases} \sqrt{1 - (2\pi N/50z)^2} - \sqrt{1 - [2\pi(N + 1)/50z]^2} & \text{for } 0 \leqslant \alpha \leqslant 1 \\ \sqrt{\kappa^2 - (2\pi N/50z)^2} - \sqrt{\kappa^2 - [2\pi(N + 1)/50z]^2} & \text{for } 1 \leqslant \alpha \leqslant \kappa \\ \text{not defined for } \alpha > \kappa. \end{cases}$$

In the expressions for $\Delta\alpha_3$, N is defined as $50z\sqrt{1 - \alpha^2}/2\pi$ for the first interval and $50z\sqrt{\kappa^2 - \alpha^2}/2\pi$ for the second.

Table 6. Conditions for Numerical Quadrature

Interval	Value of $\Delta\alpha_1$ or ρ_p	
	Case 1	Case 2
$0 \leqslant \alpha \leqslant 1$	0.003	0.0006
$1 \leqslant \alpha \leqslant \kappa$ ($\kappa = 2$)	0.003	0.0006
$\kappa \leqslant \alpha \leqslant 2.144$[a]	0.001	0.0002
$2.144 \leqslant \alpha \leqslant 2.1445$[b]		0.00001
ρ_p	0.0007125	0.0002125
2.1449250[c] $\leqslant \alpha \leqslant 2.145425$		0.00001
2.145425[d] $\leqslant \alpha \leqslant 2.289425$[e]	0.001	0.0002
$2.289425 \leqslant \alpha \leqslant \alpha_\infty$	0.005	0.001

[a] $p - \rho_p$ for case 1.
[b] $p - \rho_p$ for case 2.
[c] $p + \rho_p$ for case 2.
[d] $p + \rho_p$ for case 1.
[e] $2p - \kappa$.

The calculated integrals for two cases of integration intervals and several upper limits are given in Table 7. For convenience in observing the convergence of the integral the term $-j\pi h(p)/\Delta'(p)$ was eliminated from the calculation. From the results shown in Table 7, the widths of quadrature are chosen to be those of case 1 in Table 6, and the upper limit of integration, α_∞, is chosen to be 2.5 for $z \geqslant 5$ mm, to be 7 for $1 \leqslant z \leqslant 5$ mm, to be 15 for $z = 0$ and $r = 70$ mm, and to be 50 for $z = 0$ and $r = 0$.

The z component, S_{zz}, of the displacement vector exerted by the vertical surface force is calculated along the z axis and shown in Fig. 11. It is compared with

$$\sin\left[\frac{a}{\lambda}\pi\left(\sqrt{1 + (z/a)^2} - \frac{z}{a}\right)\right] ,$$

which is obtained by the assumption of a piston movement source.

The envelope of many consecutive peaks of S_{zz} coincides with the sine function fairly well, and the first peak of the former (indicated as P_1 in Fig. 11) coincides very well with the second peak of the latter (indicated as Q_1 in Fig. 11), which shows there is an elemental coincidence between them. However, S_{zz} seems to have infinitely many peaks that cannot be seen in the sine function.

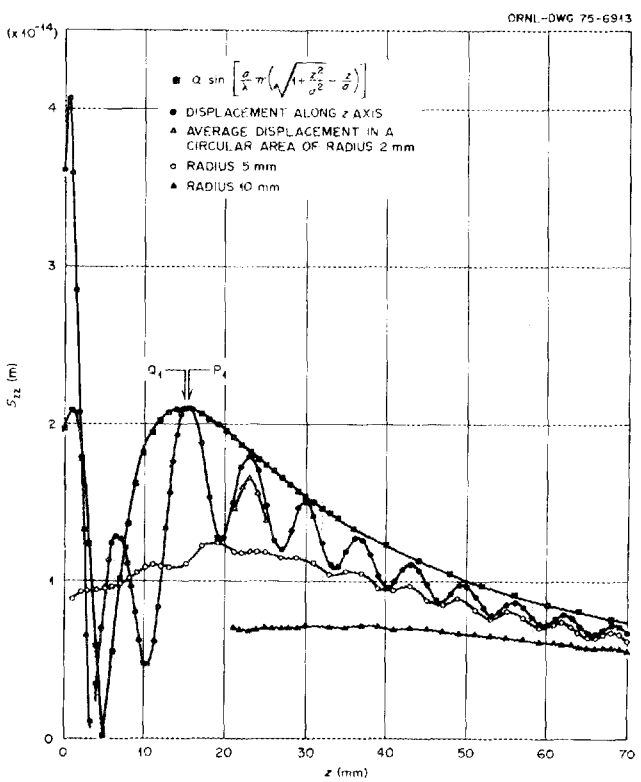

Fig. 11. The z Component of the Displacement Vector Along the z Axis Exerted by a Vertical Surface Force that is Uniformly Distributed Over a Circular Area of 10-mm Radius. The S_{zz} curve is compared with the sine function calculated for a piston movement source and with curves for average S_{zz} values over circular areas about the z axis.

Table 7. Results of Trial Integrations

z, r (mm)	Case	α_∞	$\lvert S_{zz}\rvert$	Phase (S_{zz}) (rad)	$\lvert S_{rz}\rvert$	Phase (S_{rz}) (rad)	$\lvert S_{zr}\rvert$	Phase (S_{zr}) (rad)	$\lvert S_{rr}\rvert$	Phase (S_{rr}) (rad)
1, 0	1	5	2.152389×10^{-14}	0.2697456	0	0	1.149228×10^{-14}	0.7056541	0	0
	1	7	2.150337	0.2700094	0	0	1.146818	0.7074461	0	0
	1	10	2.150211	0.2700257	0	0	1.146481	0.7076976	0	0
5, 0	1	2.3	8.426872×10^{-15}	1.218601	0	0	1.622095×10^{-14}	0.4578723	0	0
	1	2.5	8.440092	1.214364	0	0	1.622405	0.4577783	0	0
	1	3	8.439656	1.214502	0	0	1.622424	0.4577724	0	0
70, 0	1	2.3	6.731603×10^{-15}	0.8765144	0	0	3.469332×10^{-15}	−1.519320	0	0
	1	2.5	6.731603	0.8765144	0	0	3.469332	−1.519320	0	0
70 cos 5°, 70 sin 5°	1	2.3	5.893158×10^{-15}	0.9248500	1.970109×10^{-15}	1.028361	2.192425×10^{-15}	0.9503430	1.244738×10^{-14}	0.2338918
	1	2.5	5.893158	0.9248500	1.970109	1.028361	2.192425	0.9503430	1.247738	0.2338918
	2	2.5	5.893172	0.9248465	1.970095	1.028370	2.191920	0.9503527	1.246473	0.2330313
70 cos 45°, 70 sin 45°	1	2.3	3.189158×10^{-16}	−1.270700	3.445511×10^{-16}	1.116582	1.578155×10^{-16}	−0.6709027	3.833751×10^{-16}	−0.5478679
	1	2.5	3.189158	−1.270700	3.445511	1.116582	1.578155	−0.6709027	3.833751	−0.5478679
	2	2.5	3.190211	−1.270525	3.445498	1.116602	1.571987	−0.6756774	3.860736	−0.5564306
70 cos 85°, 70 sin 85°	1	2.5	3.174814×10^{-17}	0.9691312	2.833472×10^{-17}	−0.3999404	2.096557×10^{-17}	−0.1740580	2.092257×10^{-16}	−0.5338810
	1	3	3.174674	0.9691956	2.833197	−0.3999814	2.096399	−0.1740712	2.092284	−0.5338733
	2	2.5	3.180156	0.9690650	2.833453	−0.3999589	2.069394	−0.1671055	2.113009	−0.5386272
70 cos 89.5°, 70 sin 89.5°	1	5	9.633899×10^{-16}	0.001404492	8.703992×10^{-17}	−0.06365836	9.197552×10^{-16}	0.03224713	2.278714×10^{-16}	0.4213050
	1	7	9.631721	0.001404810	8.699993	−0.06368766	9.193993	0.03225962	2.279217	0.4212061
	1	10	9.631207	0.001404885	8.706124	−0.06364275	9.193823	0.03226021	2.279451	0.4211602
	2	7	9.630081	0.001380697	8.700243	−0.06366003	9.211876	0.03185464	2.291131	0.4215584
0, 0	1	30	1.467929×10^{-14}	0.4228726	0	0	9.809952×10^{-15}	0.01372709	0	0
	1	50	1.466540	0.4232986	0	0	9.904608	0.01359590	0	0
	1	70	1.468335	0.4227479	0	0	9.938967	0.01354890	0	0
0, 70	1	10	9.525477×10^{-16}	−0.0005924255	9.678008×10^{-16}	0.004813686	8.878025×10^{-16}	0.04445589	9.038651×10^{-16}	−0.1971114
	1	15	9.523725	−0.0005925345	9.678415	0.004813483	8.879571	0.04444814	9.039475	−0.1970932
	1	20	9.527025	−0.0005923292	9.678458	0.004813462	8.879485	0.04444871	9.038686	−0.1971107

The displacement S_{zz} is composed of the z component of the longitudinal wave and the z component of the transverse wave, and we cannot know each one individually, as explained previously. The fluctuation of S_{zz} can be explained as an interference between the longitudinal and transverse waves. Such a fluctuation has never been detected so far in an ultrasonic technique, because pulse waves are used in the usual ultrasonic technique, making it impossible for the longitudinal wave and transverse wave to coincide except for the very near field (because of the velocity differences).

The following averaging effect also conceals the fluctuation phenomenon. Average displacements in circular areas of radii 2, 5, and 10 mm were calculated with Eq. (35), and the results are also shown in Fig. 11. In the case of a 10-mm radius (similar to common ultrasonic techniques), very little fluctuation can be observed, which may have been unintentionally overlooked in the past. The z component of the displacement, S_{zr}, exerted along the symmetry axis by a horizontal surface force, is shown in Fig. 12.

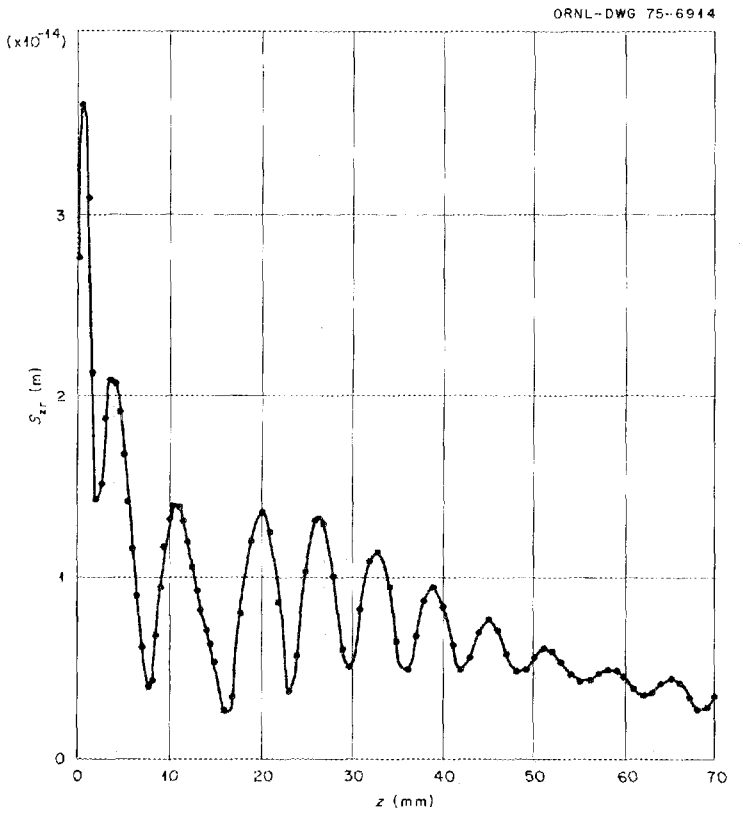

Fig. 12. The z Component of the Displacement Vector Along the z Axis Exerted by a Horizontal Surface Force that has only a Radial Component and is Distributed Uniformly over a Circular Area of 10-mm Radius Symmetrically Around the z axis.

The z component, S_{zz}, and r component, S_{rz}, of the displacement on a hemisphere of 70-mm radius that are exerted by a vertical surface force are shown in Fig. 13. The first minimum of S_{zz} is at an angle of about

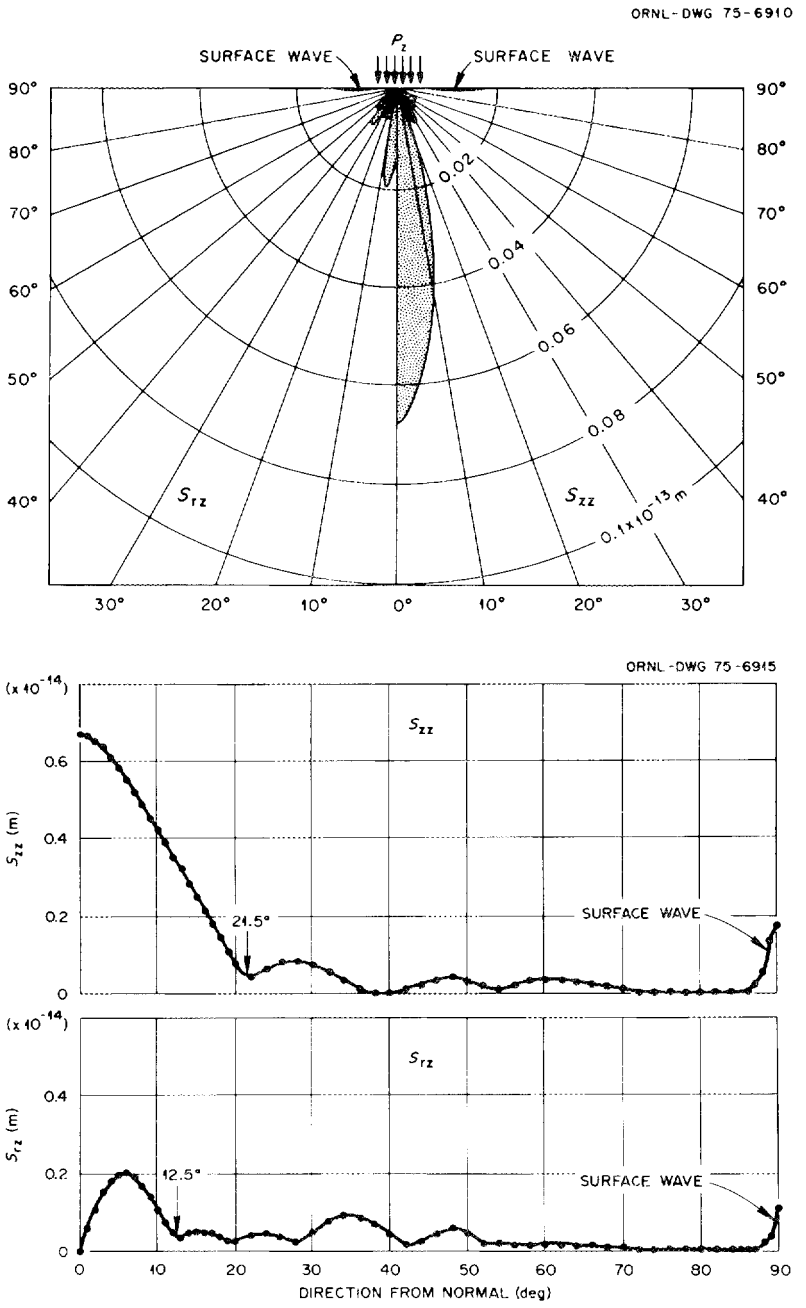

Fig. 13. The r Component (S_{rz}) and z Component (S_{zz}) of the Displacement Vector on a Hemisphere of 70-mm Radius Exerted by a Vertical Surface Force Uniformly Distributed over a Circular Area of 10-mm Radius.

21.5°, which coincides fairly well with the value of 22.2° calculated from $\Theta = \sin^{-1}(0.61\lambda_\ell/a)$ on the assumption of a piston movement source. The angle for S_{rz} is 12.5°, which also coincides well with 11.4° calculated from $\Theta = \sin^{-1}(0.61\lambda_t/a)$. Displacements exerted by a horizontal surface force are also shown in Fig. 14. In all four cases, the last peak appears at an angle of 90°, that is, on the surface. These peaks are confined to only small depths, which is characteristic of surface waves.

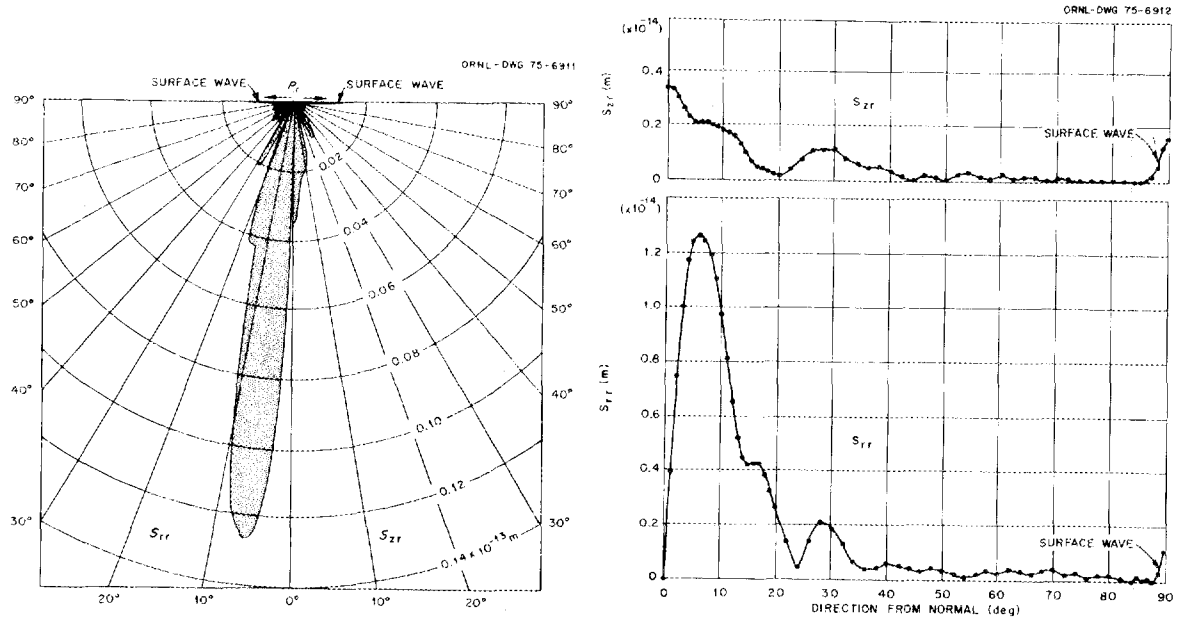

Fig. 14. The r Component (S_{rr}) and z Component (S_{zr}) of the Displacement Vector on a Hemisphere of 70-mm Radius Exerted by a Horizontal Surface Force that has only a Radial Component and is Uniformly and Symmetrically Distributed in a Circular Area of 10-mm Radius Around the z Axis.

It is impossible to divide a displacement into longitudinal and transverse wave components. However, if the surface force is pulsed, both waves should be resolved individually in time at a sufficiently distant point from the source, because they travel with different velocities.

The surface forces are assumed to have the following boundary conditions:

$$\tilde{P}_z = \tilde{P}_r = \begin{cases} \cos\omega_0 t \text{ N/m}^3, & |t - nT| \leq T_0 \\ 0, & |t - nT| > T_0 \end{cases} .$$

The pulse displacement due to a pulsed force is calculated with Eqs. (C46) and (C47) from Appendix C. The conditions are

$$2\pi \times 0.5 \times 10^6 \leqslant \omega \leqslant 2\pi \times 1.5 \times 10^6 \ ,$$

$$T_0 = 3 \times 10^{-6} \text{ sec} \ ,$$

$$T = 34 \times 10^{-6} \text{ sec} \ ,$$

$$\Delta t = 0.2 \ \mu\text{sec} \ ,$$

$$\omega_0 = 2\pi \times 10^6$$

for calculating pulse displacements for the points (z = 70 mm, r = 0), (z = 70 cos 5° mm, r = 70 sin 5° mm), and (z = 0, r = 70 mm). The pulse displacement for (z = 25 mm, r = 0) was calculated for the same conditions except $T_0 = 1.75 \times 10^{-6}$ sec. Some of the results are shown in Figs. 15 through 21.

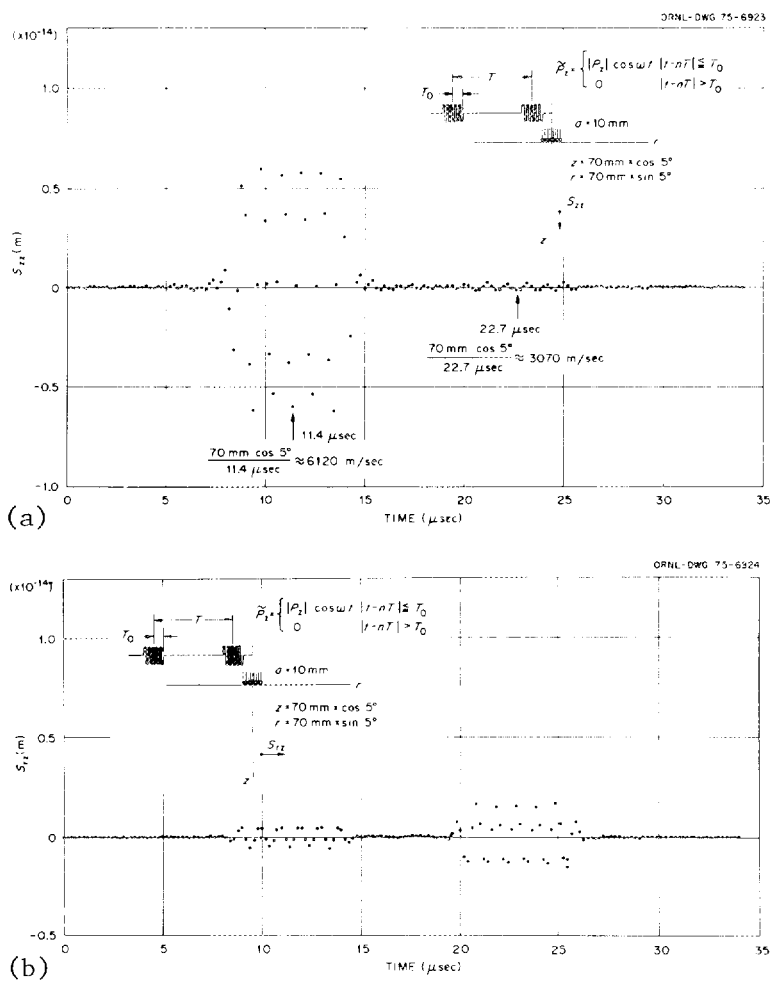

Fig. 15. Components of the Pulse Displacement Vector at a Point (z = 70 cos 5° mm, r = 70 sin 5° mm) Exerted by a Pulsed Surface Force Uniformly Distributed over a Circular Area of radius 10 mm. (a) z component (S_{zz}) and (b) r component (S_{rz}) from vertical surface force.

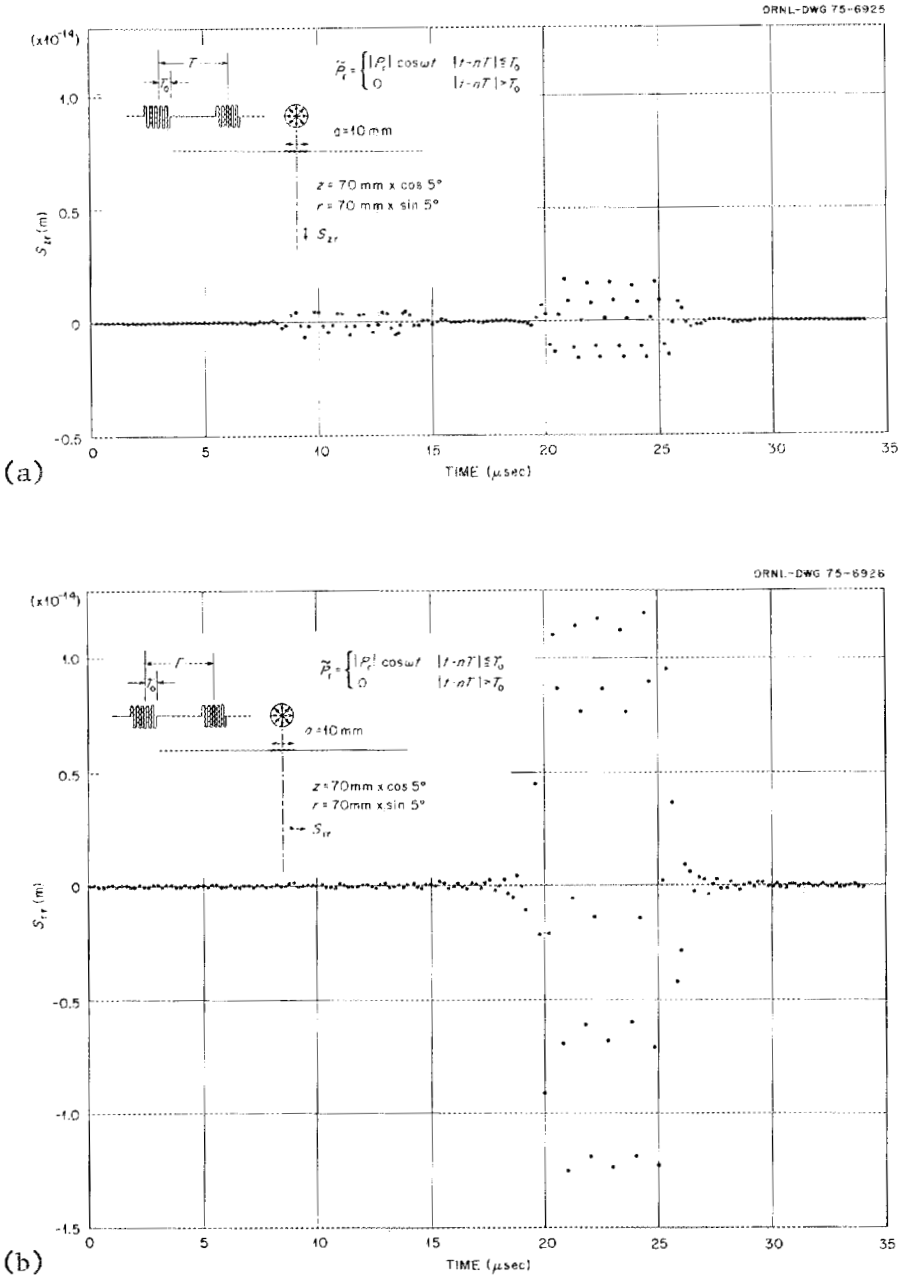

Fig. 16. Components of the Pulse Displacement Vector at a Point (z = 70 cos 5° mm, r = 70 sin 5° mm) Exerted by a Pulsed Surface Force Uniformly Distributed over a Circular Area of Radius 10 mm. (a) z component (S_{zr}) and (b) r component (S_{rr}) from horizontal force with only radial component and symmetrical about z axis.

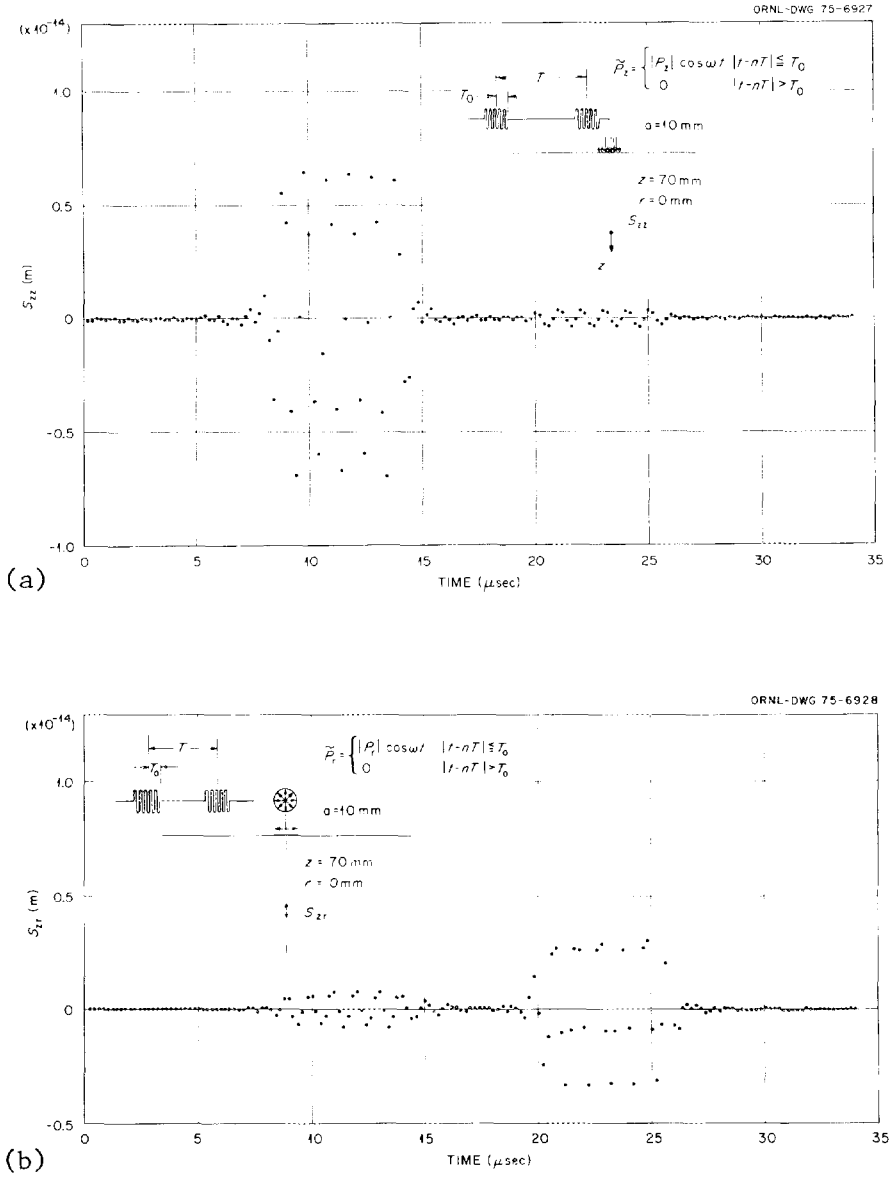

Fig. 17. Components of the Pulse Displacement Vector at a Point (z = 70 mm, r = 0) Exerted by a Pulsed Surface Force Uniformly Distributed over a Circular Area of Radius 10 mm. (a) z component (S_{zz}) from vertical surface force. (b) z component (S_{zr}) from horizontal force with only radial component and symmetrical about z axis.

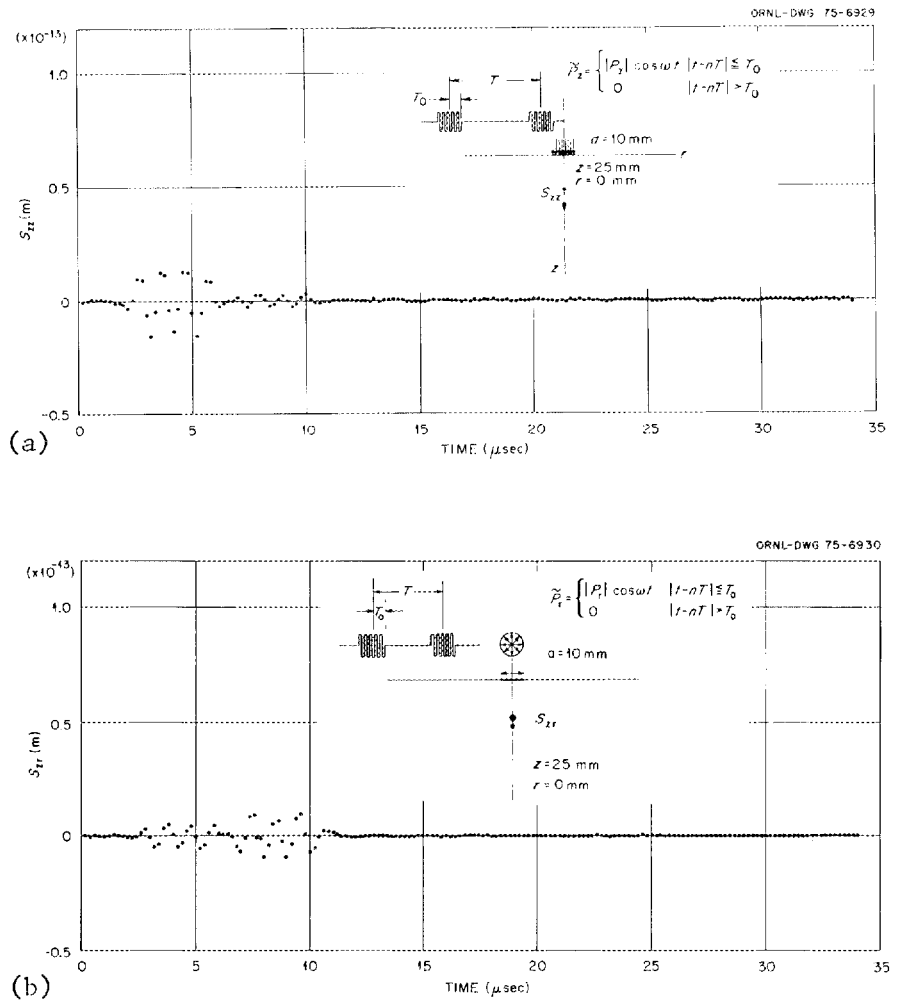

Fig. 18. Components of the Pulse Displacement Vector at a Point (z = 25 mm, r = 0) Exerted by a Pulsed Surface Force Uniformly Distributed over a Circular Area of Radius 10 mm. (a) z component (S_{zz}) from vertical surface force. (b) z component (S_{zr}) from horizontal force with only radial component and symmetrical about z axis.

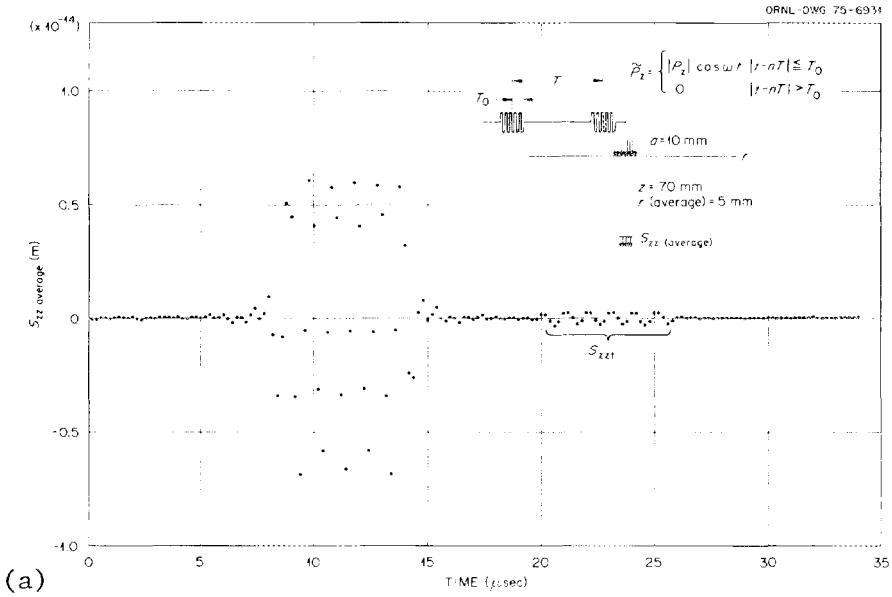

(a)

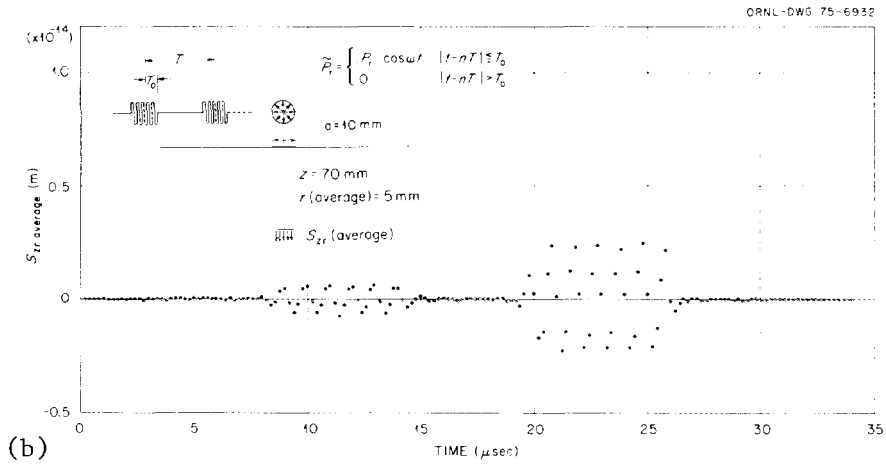

(b)

Fig. 19. Components of the Pulse Displacement Vector Averaged in a Circular Area of Radius 5 mm Centered at (z = 70 mm, r = 0) Exerted by a Pulsed Surface Force Uniformly Distributed over a Circular Area of Radius 10 mm. (a) z component [S_{zz} (average)] from vertical surface force. (b) z component [S_{zr} (average)] from horizontal force with only radial component symmetrical about z axis.

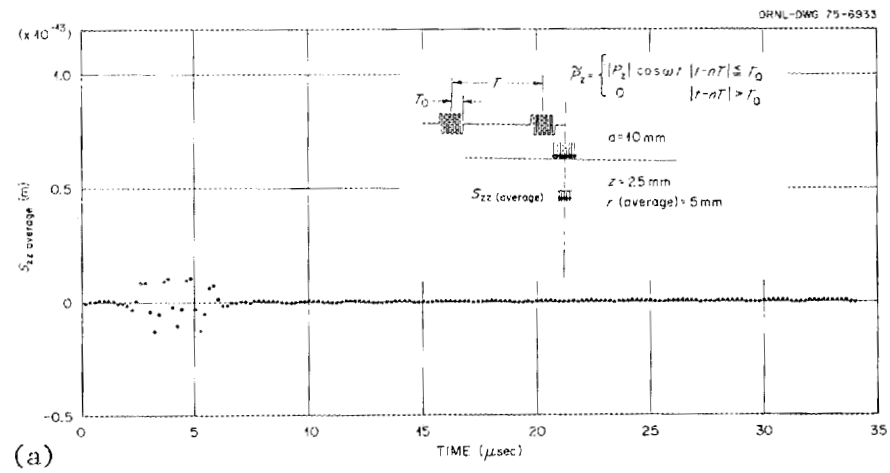

(a)

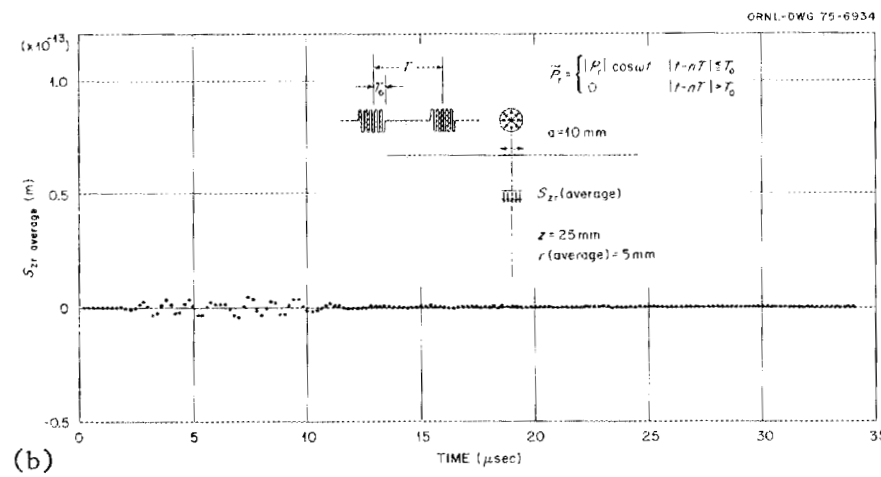

(b)

Fig. 20. Components of the Pulse Displacement Vector Averaged Over a Circular Area of Radius 5 mm Centered at (z = 25 mm, r = 0) Exerted by a Pulsed Surface Force Uniformly Distributed over a Circular Area of Radius 10 mm. (a) z component [S_{zz} (average)] from vertical surface force. (b) z component [S_{zr} (average)] from horizontal force with only radial component symmetrical about z axis.

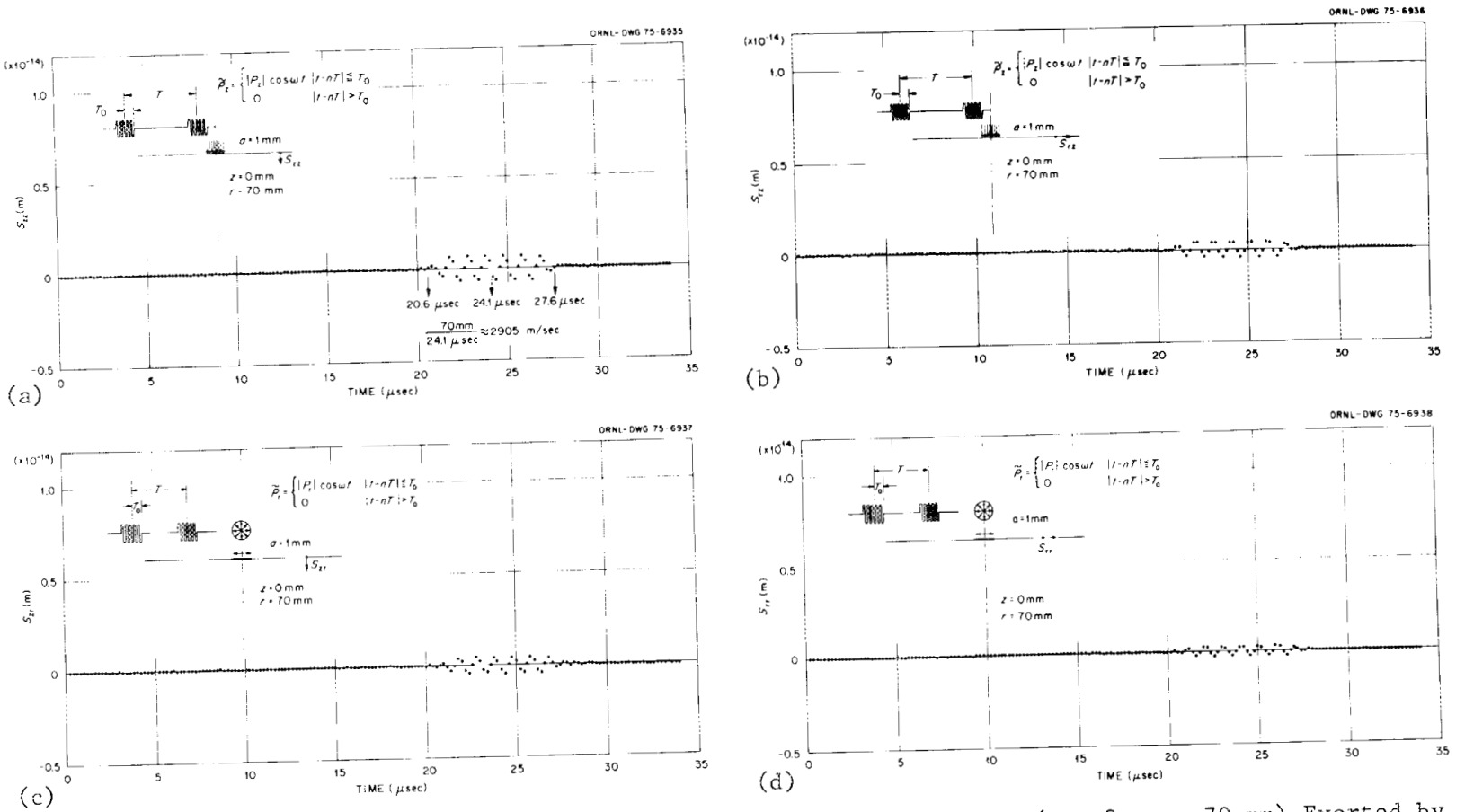

Fig. 21. Components of the Pulse Displacement Vector at a Point (z = 0, r = 70 mm) Exerted by a Pulsed Surface Force Uniformly Distributed over a Circular Area of Radius 1 mm. (a) z component (S_{zz}) and (b) r component (S_{rz}) from vertical surface force. (c) z component (S_{zr}) and (d) r component (S_{rr}) from horizontal force with only radial component symmetrical about z axis.

The longitudinal and transverse waves are clearly separated in time, as they should be in a real physical phenomenon. The wave velocities calculated from Fig. 15(a) are 6120 m/sec for the longitudinal wave and 3070 m/sec for the transverse wave. In the case of an infinite solid, the velocities are calculated from Lamé constants as 6200 and 3100 m/sec, respectively, by the simple formulas $\sqrt{(\lambda + 2\mu)/\rho}$ and $\sqrt{\mu/\rho}$. The difference in the velocities is considered to result from the differences in the conditions and an inaccurate estimation of the velocity from Fig. 15(a).

There are some interesting facts in Fig. 17, which may look strange at first. That is, a disturbance in the z direction travels along the z axis not only with the velocity of a longitudinal wave but also with the velocity of a transverse wave. It seems impossible at first, but it can be explained in the following qualitative way, with reference to Fig. 22. The theory of elastic waves assumes that both longitudinal and transverse waves are generated by any type of applied force. We assume that two identical vertical forces work simultaneously on points A and B, and pure longitudinal and pure transverse waves are generated from the point sources. They are not necessarily spherical waves, but they must be symmetric around the vertical lines through A and B, respectively. Two transverse wave fronts travel with the transverse wave velocity to meet at a point P on the z axis. Each displacement vector has the same amplitude and the same phase, but the directions are symmetric about the z axis, as is shown in Fig. 22. While the r components of displacement cancel each other, the z components are not canceled. Consequently, the z direction disturbance travels along the z axis approximately with a velocity of transverse wave. However, such a wave has never been observed by the usual ultrasonic techniques. Pulse displacements averaged in a circular area of 5-mm radius, centered at z = 70 and 25 mm, are shown in Figs. 19 and 20. In Fig. 19(a), it is reduced but still remains [S_{zzt} in Fig. 19(a)]. In Fig. 20(a) it almost disappears. The reason for the disturbance remaining in Fig. 19(a) and disappearing in Fig. 20(a) is the difference in distances between the source and observation point. When the distance is small, the procedure of averaging displacements in a

ORNL-DWG 75-6916

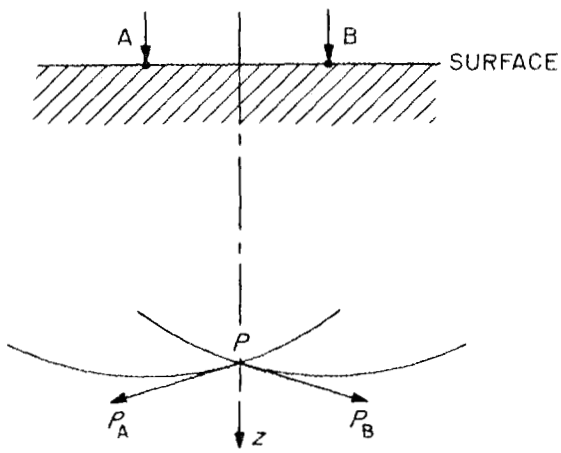

Fig. 22. Production of Longitudinal Displacements by Interaction of Transverse Waves from an Extended Source.

circular area of a certain radius is more critical than it is in the case of large distance, where the path difference is very small. This phenomenon may be used to measure the velocity of transverse waves with a longitudinal wave transducer without attaching it to a material surface. A special transducer that consists of two longitudinal wave transducers, one a large disk having a small hole in it and the other a small coaxial disk, will be able to detect both longitudinal waves and the z component of transverse waves (see Fig. 23).

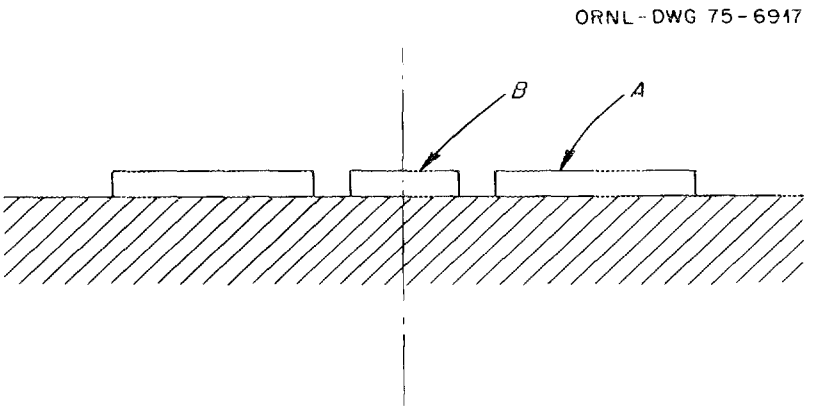

Fig. 23. Composite Transducer.

One problem is the difference in the conditions between the calculation and the actual ultrasonic testing; a second problem is the very low efficiency of the small transducer that is used to detect the z component of the transverse wave.

Pulse displacements at a point on the surface ($z = 0$, $r = 70$ mm) exerted by a pulsed surface force on a circular area of 1-mm radius are shown in Fig. 21. It is very interesting to know that the disturbance travels approximately with a speed of 2905 m/sec, which is quite close to the supposed surface wave velocity, 2891 m/sec, derived from C_ℓ/p where p is a particular root of $\Delta(\alpha) = 0$.

Numerical Calculation of the Elastic Wave Exerted by an Electromagnetic Force Caused by the Interaction Between Eddy Currents and a Constant Magnetic Field

The displacements S_z ($= S_{zz} + S_{zr}$) and S_r ($= S_{rz} + S_{rr}$), which are produced in a conductor by an eddy-current force, are calculated by use of the approximate function of surface forces shown in Fig. 8 and Table 4, p. 15. The calculated results are listed in Table 8 and shown in Fig. 24 as a polar distribution (at a distance of 58.2676 mm) near the symmetry axis.

Table 8. Numerical Displacement Data Calculated for $z = 58.2676 \cos\theta$ mm, $r = 58.2676 \sin\theta$ mm

Θ	$S_z = S_{zz} + S_{zr}$		$S_r = S_{rz} + S_{rr}$	
	Amplitude (Å)	Phase (rad)	Amplitude (Å)	Phase (rad)
0°	32.71046	0.5785691	0.000000	0.000000
1	26.17365	0.4572459	20.96264	−0.2911700
2	17.65618	0.08132202	16.92477	−0.07969033
3	14.71417	0.005480981	2.843768	1.014537
4	10.41641	0.3872855	2.273667	−0.5674052
5	3.877380	0.6561141	5.176582	1.564696
6	0.7847714	0.01685626	9.386882	−0.6882312
7	4.047799	−0.7305414	7.579748	0.3255650
8	8.542795	−0.1426877	3.495181	−0.1187731
10	10.40244	0.3757070	7.253332	−0.01513283
12	7.276527	0.6584039	2.170394	−0.1303417
14	1.811628	1.447477	1.615008	0.9760299

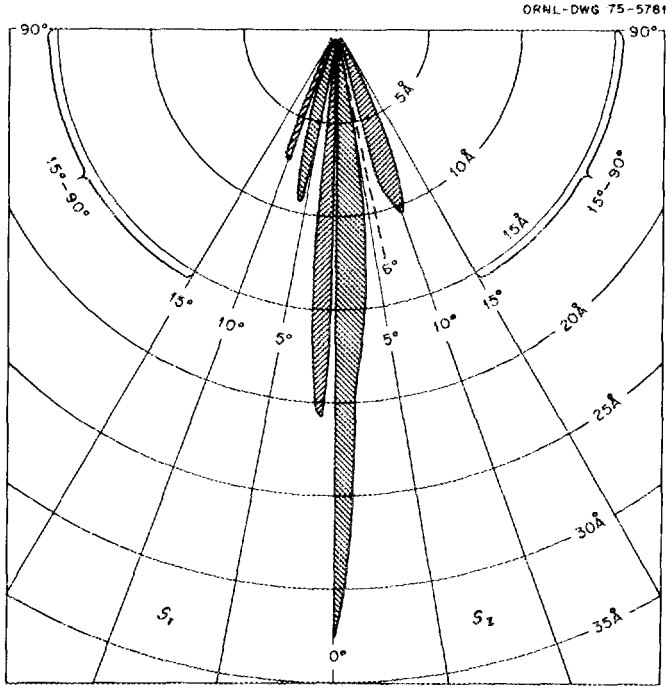

Fig. 24. Polar Distribution (distance is 58.2676 mm) of Particle Displacements, S_z and S_r.

The material constants are:

Density ρ: 7.85×10^3 kg/m^3

Lamé constants μ: 5.680339×10^{10} kg m^{-1} sec^{-2}
λ: 1.352139×10^{11} kg m^{-1} sec^{-2}

Wave velocities: $C_\ell = \sqrt{(\lambda + 2\mu)/\rho} = 5630$ m/sec

$C_t = \sqrt{\mu/\rho} = 2690$ m/sec

Frequency: 1.6 MHz

Real positive root of $\Delta(\alpha) = 0$: $p = 2.2678044$

As in the calculation for the hypothetical material given previously, the range of integration was divided into several intervals. The width of quadrature at any value of α was taken as the least of the following:

$\Delta\alpha_1$ = a constant for each interval,

$$\Delta\alpha_2 = 2\pi/50(r + a) \ ,$$

$$\Delta\alpha_3 = \begin{cases} \sqrt{1 - (2\pi N/50z)^2} - \sqrt{1 - [2\pi(N + 1)/50z]^2} & \text{for } 0 \leqslant \alpha \leqslant 1 \\ \sqrt{\kappa^2 - (2\pi N/50z)^2} - \sqrt{\kappa^2 - [2\pi(N + 1)/50z]^2} & \text{for } 1 \leqslant \alpha \leqslant \kappa \\ \text{not defined for } \alpha > \kappa \ . \end{cases}$$

In the expressions for $\Delta\alpha_3$, N is defined as $50z\sqrt{1 - \alpha^2}/2\pi$ for the first interval and $50z\sqrt{\kappa^2 - \alpha^2}/2\pi$ for the second. The intervals and $\Delta\alpha_1$ values were as follows:

Interval	$\Delta\alpha_1$
$0 \leqslant \alpha \leqslant 1$	0.003
$1 \leqslant \alpha \leqslant \kappa$	0.003
$\kappa \leqslant \alpha \leqslant p - \rho_p$	0.001
$p + \rho_p \leqslant \alpha \leqslant 2p - \kappa$	0.001
$2p - \kappa \leqslant \alpha \leqslant \alpha_\infty$	0.005

In this example, numerical values are $\rho_p = 0.0008676$, $\kappa = 2.0929368$, $p - \rho_p = 2.2669368$, $p + \rho_p = 2.2686720$, $2p - \kappa = 2.4426720$, and $\alpha_\infty = 3$. The Fortran program for carrying out this calculation is given in Appendix D.

Accuracy of Numerical Calculation

The accuracy of the numerical calculations of Eqs. (11), (12), and (13) is considered to be very good for the widths of quadrature used in integrating these equations. Simpson et al.[16] give similar examples. The accuracy of the numerical calculation of Eqs. (44) and (45) is considered to be better than 1% for the following reasons:

1. The width of numerical quadrature is chosen to be small enough to follow the fluctuations of the trigonometric functions and the Bessel functions. To illustrate,

$$\int_0^{\pi} \sin x \, dx$$

is calculated by both analytical [Eq. (62)] and numerical [Eq. (63)] methods, and the results are compared in Table 9.

$$\int_0^{\pi} \sin x \, dx = \Big[-\cos x \Big]_0^{\pi} = 2 \ , \tag{62}$$

$$\int_0^{\pi} \sin x \, dx = \sum_{i=1}^{N} \frac{\pi}{N} \sin\left[\frac{\pi}{N}\left(\frac{1}{2} + i - 1\right)\right] . \tag{63}$$

[16] W. A. Simpson, C. V. Dodd, J. W. Luquire, and W. G. Spoeri, *Computer Programs for Some Eddy-Current Problems — 1970*, ORNL-TM-3295 (June 1971).

Table 9. Accuracy of Numerical Integration of $\int_0^{\pi} \sin x \, dx$

N, Number of Quadratures	Value of Integral	Error (%)
Analytical	2.000000	
20	2.008248	0.41
22	2.006814	0.34
24	2.005724	0.29
26	2.004876	0.24
28	2.004202	0.21
30	2.003660	0.18

We know from Table 9 that $\int_0^{\pi} \sin x \, dx$ can be numerically calculated with an accuracy better than 0.3%, if the numerical quadrature width is chosen to be $\pi/24$; that is, 1/48 of the fluctuation period, 2π. The product of two trigonometric functions can be represented as the sum of other trigonometric functions:

$$f(z) = \sin k_1 z \times \sin k_2 z$$

$$= \frac{1}{2}\left[\cos(k_1 + k_2)z - \cos(k_1 - k_2)z\right] . \qquad (64)$$

Equation (64) shows that $f(z)$ fluctuates with a period of approximately $2\pi/(k_1 + k_2)$. We assume the product of two Bessel functions can be treated similarly.

Equations (44) and (45) have three fluctuating terms. One of them is the sum of two trigonometric functions, and the other two are Bessel functions. These two Bessel functions fluctuate with the periods of approximately $2\pi/a_i$ and $2\pi/r$ and so the product of these two Bessel functions can be considered to fluctuate with the period of approximately $2\pi/(a_i + r)$. In the numerical calculation the width of the numerical quadrature is chosen to be the least one of the following three values, 0.02× the fluctuation period of the trigonometric function, 0.02× $2\pi/(a_i + r)$ and a certain small value, as is shown in Table 6. The computational accuracy of the whole fluctuating factor can be considered to be about 0.6%, because the computational accuracy of each fluctuating factor, that is a trigonometric function and two Bessel functions, is considered to be about 0.3%.

2. Several different values of the upper limit of integration were tried for several conditions to assure the convergence of the integration. Also numerical quadrature widths one-fifth of the initial values and a smaller value of ρ_p were tried (see Table 6). These modifications are compared in Table 7, which shows that the calculated values vary no more than 0.5%.

PROBLEMS AND CONSIDERATIONS

1. The final purpose of this study should be not only the calculation of the acoustic field produced by an electromagnetic force but should also be the calculation of the voltage induced in a coil by the interaction of a steady magnetic field with the acoustic field that is reflected and returns from the rear surface of the material.

2. In this paper the attenuation of the ultrasound by the material is not taken into consideration. It should eventually be considered.

3. An actual metal is not strictly linear, isotropic, and homogenous as is treated in this paper.

4. In the case of large ultrasonic amplitudes, the theory of nonlinear elastic waves is necessary.

Other problems for consideration are:

Can we treat the problem completely by macroscopic and classical theory?

Can we consider the eddy-current velocity to be infinite when the volume force is integrated to get surface force?

Can we neglect the static force terms, F_{z0} and F_{r0}?

Can we neglect the attenuation or amplification of the ultrasonic field by the steady magnetic field?

We may have to develop new differential equations to rigorously treat the interaction of the elastic wave field and the electromagnetic field.

ACKNOWLEDGMENTS

The author would like to express his appreciation to R. W. McClung for his encouragement for this research and for his review of this report and many helpful suggestions, to S. Peterson for editing and review of this report and many helpful suggestions, and to W. E. Deeds and C. V. Dodd for their review of this report and many helpful suggestions. He would also like to acknowledge the help of Julia Bishop in the typing of this report.

APPENDIX A

Fortran Program for Calculation of Eddy-Current Force

Fortran Program for Calculation of Eddy-Current Force

```
.TYPE FORCE.F4
00100          COMMON X
00200          REAL N,I1,MU,MUO,MU1,K
00201         1     ,J1ZTR,J1IDR2,J1IDR1,J1R1R2
00300          DIMENSION AF(15),ZZF(2),BR(15),BZ(15),CURNTA(15,2)
00400         1        ,CURNTP(15,2),FZ1A(15,2),FZ1P(15,2),FR1A(15,2)
00500         1       ,FR1P(15,2),PZ1A(15),PZ1P(15),PR1A(15),PR1P(15)
00600          COMPLEX A(15,2),ETAA1,ETA1,EXPETA ,W,CURNT(15,2)
00700         1       ,FZ1(15,2),FR1(15,2),JK1K2,JK3K4,PZ1(15),PR1(15)
00800          DATA(AF(IJ),IJ=1,15)/
00900         1    8.E-3,9.E-3,10.E-3,10.5E-3,11.E-3,11.5E-3,12.E-3
01000         1  ,12.5E-3,13.E-3,13.5E-3,14.E-3,14.5E-3,15.E-3
01100         1  ,15.5E-3,16.E-3/
01200          DATA(ZZF(IJ),IJ=1,2)/
01300         1    0.E-3,-0.5E-3/
01400          DATA(BZ(IJ),IJ=1,15)/
01500         1    -0.285,-0.205,-0.145,-0.113,-0.08,-0.053,-0.025,-0.005
01600         1  ,0.015,0.055,0.095,0.103,0.11,0.11,0.11/
01700          DATA(BR(IJ),IJ=1,15)/
01800         1    0.48,0.39,0.36,0.34,0.32,0.30,0.28,0.27,0.26,0.255
01900         1    ,0.25,0.248,0.245,0.245,0.245/
20400          R11=10.287E-3
20500          R22=14.7955E-3
20600          H11=0.3429E-3
20700          H22=0.5969E-3
20800          N=7.91667
20900          I1=1790.
21100          RBAA=(R11+R22)/2.
21200          R1=R11/RBAA
21300          R2=R22/RBAA
21400          H1=H11/RBAA
21500          H2=H22/RBAA
21700          PI=3.1415926
21800          SIGMA1=1.351351E6
21900          MU=4.*PI*1.E-7
22000          MUO=1.
22100          MU1=1.
22180          FREQ=1.6E6
22200          OMEGA=2.*PI*FREQ
22300          OMSR1=OMEGA*MU1*MU*SIGMA1*RBAA**2
22303          TYPE 87
22304          TYPE 87
22305          TYPE 81
22310          TYPE 5963,R11,R22,H11,H22
22315          TYPE 82
22320          TYPE 5963,N,I1,FREQ,SIGMA1
22325          TYPE 87
```

```
      DO 121 II=1,15
      DO 1111 JJ=1,2
      RR=AR(II)
      ZZ=ZZR(JJ)
      R=RR/RBAA
      Z=ZZ/RBAA
      A(II,JJ)=(0.,0.)
      DO 11 I=1,1200
      IF(I-350) 10,10,20
   20 IF(I-460) 30,30,40
   10 ZETA=.005+.01*FLOAT(I-1)
      DZETA=.01
      GO TO 50
   30 ZETA=3.525+.05*FLOAT(I-351)
      DZETA=.05
      GO TO 50
   40 ZETA=9.05+.1*FLOAT(I-461)
      DZETA=.1
      GO TO 50
   50 ETAA1=CMPLX(ZETA**2,OMSR1)
      ETA1=CSQRT(ETAA1)
      EXPETA=CEXP(ETA1*Z)
      EXPZET=EXP(ZETA*Z)
      W=1./(MU1/MU0+ETA1/ZETA)
      EXPH12=EXP(-ZETA*H1)-EXP(-ZETA*H2)
      ZETA3=1./ZETA**3
      X=ZETA*R
      CALL BESEL1(F1)
      J1ZTR=F1
      X=ZETA*R2
      CALL BESLID(F3)
      J1IDR2=F3
      X=ZETA*R1
      CALL BESLID(F4)
      J1IDR1=F4
      J1R1R2=J1IDR2-J1IDR1
      A(II,JJ)=A(II,JJ)+ZETA3*J1R1R2*J1ZTR*EXPH12*EXPETA
     1                  *W*DZETA
   11 CONTINUE
```

```
27200          K=MU1*MU*N*I1/((H2-H1)*(R2-R1)*RBAA)
27300          AK=K*RBAA
27500          A(II,JJ)=AK*A(II,JJ)
27600          CURNT(II,JJ)=-SIGMA1*ØMEGA*(0.,1.)*A(II,JJ)
27700          FZ1(II,JJ)=CURNT(II,JJ)*BR(II)
27800          FR1(II,JJ)=CURNT(II,JJ)*BZ(II)
27850          CURNTA(II,JJ)=CABS(CURNT(II,JJ))
27860          CURNTP(II,JJ)=ATAN(AIMAG(CURNT(II,JJ))/REAL(CURNT(II,JJ)))
27870          FZ1A(II,JJ)=CABS(FZ1(II,JJ))
27880          FZ1P(II,JJ)=ATAN(AIMAG(FZ1(II,JJ))/REAL(FZ1(II,JJ)))
27890          FR1A(II,JJ)=CABS(FR1(II,JJ))
27900          FR1P(II,JJ)=ATAN(AIMAG(FR1(II,JJ))/REAL(FR1(II,JJ)))
27903          TYPE 88
27905          TYPE 5963,RR,ZZ
27907          TYPE 83
27910          TYPE 5963,CURNTA(II,JJ),CURNTP(II,JJ),BR(II),BZ(II)
27915          TYPE 84
27920          TYPE 5963,FZ1A(II,JJ),FZ1P(II,JJ),FR1A(II,JJ),FR1P(II,JJ)
27921          TYPE 5963,FZ1(II,JJ),FR1(II,JJ)
28000     1111 CØNTINUE
28100          JK1K2=CLØG(FZ1(II,2)/FZ1(II,1))
28101          JK1K2=REAL(JK1K2)+(0.,1.)*(AIMAG(JK1K2)-2.*PI)
28102          JK1K2=JK1K2/ZZF(2)
28200          JK3K4=CLØG(FR1(II,2)/FR1(II,1))
28250          JK3K4=REAL(JK3K4)+(0.,1.)*(AIMAG(JK3K4)-2.*PI)
28251          JK3K4=JK3K4/ZZF(2)
28300          PZ1(II)=FZ1(II,1)/JK1K2
28400          PR1(II)=FR1(II,1)/JK3K4
28450          PZ1A(II)=CABS(PZ1(II))
28460          PZ1P(II)=ATAN(AIMAG(PZ1(II))/REAL(PZ1(II)))
28470          PR1A(II)=CABS(PR1(II))
28480          PR1P(II)=ATAN(AIMAG(PR1(II))/REAL(PR1(II)))
28490          TYPE 85
28500          TYPE 5963,PZ1A(II),PZ1P(II),PR1A(II),PR1P(II)
28505          TYPE 86
28510          TYPE 5963,PZ1(II),PR1(II)
28515          TYPE 87
28600      121 CØNTINUE
```

```
28700    5963 FORMAT(4E)
28710      81 FORMAT(T2,'INNER RADIUS'T19,'OUTER RADIUS'
28711        1        T36,'LIFT OFF'T53,'L.O.+COIL THICK')
28720      82 FORMAT(T2,'TURNS'T19,'DRIVING CURRENT'
28721        1        T36,'FREQUENCY'T53,'CONDUCTIVITY')
28730      83 FORMAT(T2,'E.C. AMPLITUDE'T19,'E.C. PHASE'
28731        1        T36,'BR'T53,'BZ')
28740      84 FORMAT(T2,'VOL FZ AMP'T19,'VOL FZ PHASE'
28741        1        T36,'VOL FR AMP'T53,'VOL FR PHASE')
28750      85 FORMAT(T2,'SURFS FZ AMP'T19,'SURFS FZ PHASE'
28751        1        T36,'SURFS FR AMP'T53,'SURFS FR PHASE')
28760      86 FORMAT(T2,'REAL PT OF FZ'T19,'IMAG PT OF FZ'
28761        1        T36,'REAL PT OF FR'T53,'IMAG PT OF FR')
28770      87 FORMAT(T27,'****************')
28780      88 FORMAT(T2,'R'T19,'Z')
28800         END
91900         SUBROUTINE BESEL1(ZZZ)
92000         COMMON X
92100         Y=X
92200         IF(Y-3.) 201,201,202
92300     201 YY=(Y/3.)**2
92400         ZZZ=Y*(0.5  -0.56249985  *YY+0.21093573  *YY**2
92500        1            -0.03954289  *YY**3+0.00443319  *YY**4
92600        1            -0.00031761  *YY**5+0.00001109  *YY**6)
92700         GO TO 204
92800     202 YY=3./Y
92900         F1=0.79788456  +0.00000156  *YY+0.01659667  *YY**2
93000        1               +0.00017105  *YY**3-0.00249511  *YY**4
93100        1               +0.00113653  *YY**5-0.00020033  *YY**6
93200         TETA1=Y-2.35619449
93300        1        +0.12499612  *YY+0.00005650  *YY**2
93400        1     -0.00637879  *YY**3+0.00074348  *YY**4
93500        1     +0.00079824  *YY**5-0.00029166  *YY**6
93600         ZZZ=(1.  / SQRT(Y))*F1* COS(TETA1)
93700     204 RETURN
93800         END
93900         SUBROUTINE BESLID(BS)
94000         COMMON X
94100         IF(X-5.) 138,138,139
94200     138 IS=INT(2.*X)+3
94300         AS=(1./6.)*X**3
94400         BS=AS
94500         DO 5000 KK=1,IS
94600         AS=-0.25*AS*X*X*(2.*FLOAT(KK-1)+3.)
94700        1  /(FLOAT(KK)*(FLOAT(KK)+1.)*(2.*FLOAT(KK)+3.))
94800         BS=BS+AS
94900    5000 CONTINUE
95000         GO TO 193
95100     139 Q1=(((-188.1357/X+109.1142)/X-23.79333)/X+2.050931)/X
95200         Q1=((Q1-0.1730503)/X+0.7034845)/X-0.064109E-3
95300         Q2=(((-5.817517/X+2.105874)/X-0.6896196)/X+0.4952024)/X
95400         Q2=(Q2-0.187344E-2)/X+0.7979095
95500         BS=1. -SQRT(X)*(Q2*COS(X-PI/4. )-Q1*SIN(X-PI/4. ))
95600     193 RETURN
95700         END
```

APPENDIX B

Numerical Data for Figs. 4, 5, and 7

Numerical Data for Figs. 4, 5, and 7

```
                          *****************
                          *****************
INNER RADIUS      ØUTER RADIUS      LIFT ØFF          L.Ø.+CØIL THICK
 0.1028700E-01   0.1479550E-01   0.3429000E-03   0.5969000E-03
TURNS             DRIVING CURRENT   FREQUENCY         CØNDUCTIVITY
 0.7916670E+01   0.1790000E+04   0.1600000E+07   0.1351351E+07
                          *****************

R                 Z
 0.8000000E-02   0.0000000E+00
E.C. AMPLITUDE    E.C. PHASE        BR                BZ
 0.9408181E+09   0.7130697E+00   0.4800000E+00 -0.2850000E+00
VØL FZ AMP        VØL FZ PHASE      VØL FR AMP        VØL FR PHASE
 0.4515927E+09   0.7130697E+00   0.2681332E+09   0.7130697E+00
-0.3415654E+09  -0.2954133E+09   0.2028045E+09   0.1754016E+09
%FRSAPR FLØATING UNDERFLØW        PC= 3033

R                 Z
 0.8000000E-02  -0.5000000E-03
E.C. AMPLITUDE    E.C. PHASE        BR                BZ
 0.2142270E+09  -0.7387192E+00   0.4800000E+00 -0.2850000E+00
VØL FZ AMP        VØL FZ PHASE      VØL FR AMP        VØL FR PHASE
 0.1028290E+09  -0.7387192E+00   0.6105470E+08 -0.7387192E+00
-0.7602470E+08   0.6923902E+08   0.4513967E+08 -0.4111067E+08
SURFS PZ AMP      SURFS PZ PHASE    SURFS PR AMP      SURFS PR PHASE
 0.1089236E+06  -0.6280300E-01   0.6467338E+05 -0.6280301E-01 - π
REAL PT ØF PZ     IMAG PT ØF PZ     REAL PT ØF PR     IMAG PT ØF PR
-0.1087088E+06   0.6836233E+04   0.6454588E+05 -0.4059014E+04
                          *****************
R                 Z
 0.9000000E-02   0.0000000E+00
E.C. AMPLITUDE    E.C. PHASE        BR                BZ
 0.6791710E+09   0.4002471E+00   0.3900000E+00 -0.2050000E+00
VØL FZ AMP        VØL FZ PHASE      VØL FR AMP        VØL FR PHASE
 0.2648767E+09   0.4002471E+00   0.1392300E+09   0.4002471E+00
-0.2439421E+09  -0.1032081E+09   0.1282260E+09   0.5425042E+08
R                 Z
 0.9000000E-02  -0.5000000E-03
E.C. AMPLITUDE    E.C. PHASE        BR                BZ
 0.1620044E+09  -0.1126776E+01   0.3900000E+00 -0.2050000E+00
VØL FZ AMP        VØL FZ PHASE      VØL FR AMP        VØL FR PHASE
 0.6318170E+08  -0.1126776E+01   0.3321089E+08 -0.1126776E+01
-0.2714119E+08   0.5705509E+08   0.1426652E+08 -0.2999049E+08
SURFS PZ AMP      SURFS PZ PHASE    SURFS PR AMP      SURFS PR PHASE
 0.6323816E+05  -0.4168177E+00   0.3324057E+05 -0.4168177E+00 - π
REAL PT ØF PZ     IMAG PT ØF PZ     REAL PT ØF PR     IMAG PT ØF PR
-0.5782383E+05   0.2560214E+05   0.3039458E+05 -0.1345753E+05
                          *****************
```

```
R                    Z
 0.1000000E-01  0.0000000E+00
E.C. AMPLITUDE    E.C. PHASE        BR                  BZ
 0.1322250E+10  0.2802371E+00  0.3600000E+00 -0.1450000E+00
VOL FZ AMP        VOL FZ PHASE      VOL FR AMP          VOL FR PHASE
 0.4752902E+09  0.2802371E+00  0.1914363E+09  0.2802371E+00
-0.4567490E+09 -0.1314574E+09  0.1839684E+09  0.5294813E+08
R                    Z
 0.1000000E-01 -0.5000000E-03
E.C. AMPLITUDE    E.C. PHASE        BR                  BZ
 0.3956966E+09 -0.1119222E+01  0.3600000E+00 -0.1450000E+00
VOL FZ AMP        VOL FZ PHASE      VOL FR AMP          VOL FR PHASE
 0.1424508E+09 -0.1119222E+01  0.5737601E+08 -0.1119222E+01
-0.6816299E+08  0.1281717E+09  0.2503787E+08 -0.5162472E+08
SURFS FZ AMP      SURFS FZ PHASE    SURFS FR AMP        SURFS FR PHASE
 0.1286856E+06 -0.5797160E+00  0.5183170E+05 -0.5797160E+00 — π
REAL PT OF FZ     IMAG PT OF FZ     REAL PT OF FR       IMAG PT OF FR
-0.1076607E+06  0.7049222E+05  0.4336335E+05 -0.2839270E+05
                          ****************
R                    Z
 0.1050000E-01  0.0000000E+00
E.C. AMPLITUDE    E.C. PHASE        BR                  BZ
 0.3325357E+10  0.7226446E+00  0.3400000E+00 -0.1130000E+00
VOL FZ AMP        VOL FZ PHASE      VOL FR AMP          VOL FR PHASE
 0.1130621E+10  0.7226446E+00  0.3757653E+09  0.7226446E+00
-0.6480330E+09 -0.7477597E+09  0.2818463E+09  0.2485201E+09
R                    Z
 0.1050000E-01 -0.5000000E-03
E.C. AMPLITUDE    E.C. PHASE        BR                  BZ
 0.7984065E+09 -0.7560378E+00  0.3400000E+00 -0.1130000E+00
VOL FZ AMP        VOL FZ PHASE      VOL FR AMP          VOL FR PHASE
 0.6714582E+09 -0.7560378E+00  0.9021994E+08 -0.7560378E+00
-0.4275021E+09  0.1862323E+09  0.6564042E+08 -0.6189486E+08
SURFS FZ AMP      SURFS FZ PHASE    SURFS FR AMP        SURFS FR PHASE
 0.2751233E+06 -0.8063833E-01  0.9143602E+05 -0.8063832E-01 — π
REAL PT OF FZ     IMAG PT OF FZ     REAL PT OF FR       IMAG PT OF FR
-0.1742292E+06  0.2216144E+05  0.9114089E+05 -0.7365421E+04
                          ****************
R                    Z
 0.1100000E-01  0.0000000E+00
E.C. AMPLITUDE    E.C. PHASE        BR                  BZ
 0.5995483E+10  0.8355801E+00  0.3200000E+00 -0.8000000E-01
VOL FZ AMP        VOL FZ PHASE      VOL FR AMP          VOL FR PHASE
 0.1886555E+10  0.8355801E+00  0.4716387E+09  0.8355801E+00
-0.1265402E+10 -0.1399231E+10  0.3163505E+09  0.3498077E+09
R                    Z
 0.1100000E-01 -0.5000000E-03
E.C. AMPLITUDE    E.C. PHASE        BR                  BZ
 0.1327934E+10 -0.6229352E+00  0.3200000E+00 -0.8000000E-01
VOL FZ AMP        VOL FZ PHASE      VOL FR AMP          VOL FR PHASE
 0.4249390E+09 -0.6229352E+00  0.1062348E+09 -0.6229352E+00
-0.3451225E+09  0.2479186E+09  0.8628063E+08 -0.6197965E+08
SURFS FZ AMP      SURFS FZ PHASE    SURFS FR AMP        SURFS FR PHASE
 0.4523167E+06  0.6104818E-01  0.1130792E+06  0.6104818E-01 — π
REAL PT OF FZ     IMAG PT OF FZ     REAL PT OF FR       IMAG PT OF FR
-0.4514741E+06 -0.2759597E+05  0.1128685E+06  0.6898992E+04
```

```
                                  ****************
R                    Z
 0.1150000E-01   0.0000000E+00
E.C. AMPLITUDE    E.C. PHASE        BR                  BZ
 0.7713372E+10   0.8428694E+00   0.3000000E+00 -0.5300000E-01
VØL FZ AMP        VØL FZ PHASE      VØL FR AMP          VØL FR PHASE
 0.2314012E+10   0.8428694E+00   0.4088087E+09  0.8428694E+00
-0.1539566E+10  -0.1727538E+10   0.2719900E+09  0.3051983E+09
R                    Z
 0.1150000E-01  -0.5000000E-03
E.C. AMPLITUDE    E.C. PHASE        BR                  BZ
 0.1763930E+10  -0.6077985E+00   0.3000000E+00 -0.5300000E-01
VØL FZ AMP        VØL FZ PHASE      VØL FR AMP          VØL FR PHASE
 0.5291791E+09  -0.6077986E+00   0.9348831E+08 -0.6077985E+00
-0.4344069E+09   0.3021939E+09   0.7674523E+08 -0.5338759E+08
SURFS PZ AMP      SURFS PZ PHASE    SURFS PR AMP        SURFS PR PHASE
 0.5591766E+06   0.6592716E-01   0.9878787E+05  0.6592717E-01— π
REAL PT ØF PZ     IMAG PT ØF PZ     REAL PT ØF PR       IMAG PT ØF PR
-0.5579618E+06  -0.3683822E+05   0.9857326E+05  0.6508088E+04
                                  ****************
R                    Z
 0.1200000E-01   0.0000000E+00
E.C. AMPLITUDE    E.C. PHASE        BR                  BZ
 0.8962537E+10   0.8397448E+00   0.2800000E+00 -0.2500000E-01
VØL FZ AMP        VØL FZ PHASE      VØL FR AMP          VØL FR PHASE
 0.2509510E+10   0.8397448E+00   0.2240634E+09  0.8397448E+00
-0.1675482E+10  -0.1868262E+10   0.1495966E+09  0.1668091E+09
R                    Z
 0.1200000E-01  -0.5000000E-03
E.C. AMPLITUDE    E.C. PHASE        BR                  BZ
 0.2067626E+10  -0.6145154E+00   0.2800000E+00 -0.2500000E-01
VØL FZ AMP        VØL FZ PHASE      VØL FR AMP          VØL FR PHASE
 0.5789354E+09  -0.6145154E+00   0.5169066E+08 -0.6145154E+00
-0.4730209E+09   0.3337925E+09   0.4223401E+08 -0.2980290E+08
SURFS PZ AMP      SURFS PZ PHASE    SURFS PR AMP        SURFS PR PHASE
 0.6075075E+06   0.5858911E-01   0.5424174E+05  0.5858911E-01— π
REAL PT ØF PZ     IMAG PT ØF PZ     REAL PT ØF PR       IMAG PT ØF PR
-0.6064651E+06  -0.3557296E+05   0.5414867E+05  0.3176157E+04
                                  ****************
R                    Z
 0.1250000E-01   0.0000000E+00
E.C. AMPLITUDE    E.C. PHASE        BR                  BZ
 0.9873017E+10   0.8378697E+00   0.2700000E+00 -0.5000000E-02
VØL FZ AMP        VØL FZ PHASE      VØL FR AMP          VØL FR PHASE
 0.2665715E+10   0.8378697E+00   0.4936509E+08  0.8378697E+00
-0.1783490E+10  -0.1981211E+10   0.3302759E+08  0.3668910E+08
R                    Z
 0.1250000E-01  -0.5000000E-03
E.C. AMPLITUDE    E.C. PHASE        BR                  BZ
 0.2285406E+10  -0.6190963E+00   0.2700000E+00 -0.5000000E-02
VØL FZ AMP        VØL FZ PHASE      VØL FR AMP          VØL FR PHASE
 0.6170596E+09  -0.6190963E+00   0.1142703E+08 -0.6190963E+00
-0.5025353E+09   0.3580794E+09   0.9306210E+07 -0.6631099E+07
SURFS PZ AMP      SURFS PZ PHASE    SURFS PR AMP        SURFS PR PHASE
 0.6454772E+06   0.5462752E-01   0.1195328E+05  0.5462751E-01 — π
REAL PT ØF PZ     IMAG PT ØF PZ     REAL PT ØF PR       IMAG PT ØF PR
-0.6445144E+06  -0.3524328E+05   0.1193545E+05  0.6526533E+03
```

```
                    ****************
R                   Z
 0.1300000E-01  0.0000000E+00
E.C. AMPLITUDE   E.C. PHASE        BR                 BZ
 0.1057865E+11  0.8390859E+00  0.2600000E+00  0.1500000E-01
VØL FZ AMP       VØL FZ PHASE      VØL FR AMP        VØL FR PHASE
 0.2750450E+10  0.8390859E+00  0.1586798E+09  0.8390859E+00
-0.1837694E+10 -0.2046425E+10 -0.1060208E+09 -0.1180630E+09
R                   Z
 0.1300000E-01 -0.5000000E-03
E.C. AMPLITUDE   E.C. PHASE        BR                 BZ
 0.2453787E+10 -0.6179268E+00  0.2600000E+00  0.1500000E-01
VØL FZ AMP       VØL FZ PHASE      VØL FR AMP        VØL FR PHASE
 0.6379846E+09 -0.6179268E+00  0.3680680E+08 -0.6179268E+00
-0.5200093E+09  0.3696142E+09 -0.3000054E+08  0.2132389E+08
SURFS PZ AMP     SURFS PZ PHASE    SURFS PR AMP      SURFS PR PHASE
 0.6664545E+06  0.5512462E-01  0.3844930E+05  0.5512462E-01
REAL PT ØF PZ    IMAG PT ØF PZ     REAL PT ØF PR     IMAG PT ØF PR
-0.6654422E+06 -0.3671945E+05 -0.3839090E+05 -0.2118430E+04
                    ****************
R                   Z
 0.1350000E-01  0.0000000E+00
E.C. AMPLITUDE   E.C. PHASE        BR                 BZ
 0.1114641E+11  0.8464962E+00  0.2550000E+00  0.5500000E-01
VØL FZ AMP       VØL FZ PHASE      VØL FR AMP        VØL FR PHASE
 0.2842334E+10  0.8464962E+00  0.6130525E+09  0.8464962E+00
-0.1883363E+10 -0.2128804E+10 -0.4062156E+09 -0.4591539E+09
R                   Z
 0.1350000E-01 -0.5000000E-03
E.C. AMPLITUDE   E.C. PHASE        BR                 BZ
 0.2581842E+10 -0.6075050E+00  0.2550000E+00  0.5500000E-01
VØL FZ AMP       VØL FZ PHASE      VØL FR AMP        VØL FR PHASE
 0.6583696E+09 -0.6075050E+00  0.1420013E+09 -0.6075050E+00
-0.5405706E+09  0.3758110E+09 -0.1165937E+09  0.8105727E+08
SURFS PZ AMP     SURFS PZ PHASE    SURFS PR AMP      SURFS PR PHASE
 0.6890950E+06  0.6405126E-01  0.1486283E+06  0.6405125E-01
REAL PT ØF PZ    IMAG PT ØF PZ     REAL PT ØF PR     IMAG PT ØF PR
-0.6876819E+06 -0.4410722E+05 -0.1483236E+06 -0.9513322E+04
                    ****************
R                   Z
 0.1400000E-01  0.0000000E+00
E.C. AMPLITUDE   E.C. PHASE        BR                 BZ
 0.1145871E+11  0.8615616E+00  0.2500000E+00  0.9500000E-01
VØL FZ AMP       VØL FZ PHASE      VØL FR AMP        VØL FR PHASE
 0.2864678E+10  0.8615616E+00  0.1088578E+10  0.8615616E+00
-0.1865631E+10 -0.2173891E+10 -0.7089398E+09 -0.8260786E+09
R                   Z
 0.1400000E-01 -0.5000000E-03
E.C. AMPLITUDE   E.C. PHASE        BR                 BZ
 0.2626919E+10 -0.5849336E+00  0.2500000E+00  0.9500000E-01
VØL FZ AMP       VØL FZ PHASE      VØL FR AMP        VØL FR PHASE
 0.6567297E+09 -0.5849336E+00  0.2495573E+09 -0.5849336E+00
-0.5475476E+09  0.3626094E+09 -0.2080681E+09  0.1377916E+09
SURFS PZ AMP     SURFS PZ PHASE    SURFS PR AMP      SURFS PR PHASE
 0.6938162E+06  0.8522099E-01  0.2636501E+06  0.8522099E-01
REAL PT ØF PZ    IMAG PT ØF PZ     REAL PT ØF PR     IMAG PT ØF PR
-0.6912982E+06 -0.5905615E+05 -0.2626933E+06 -0.2244134E+05
```

```
R                    Z
 0.1500000E-01  0.0000000E+00
E.C. AMPLITUDE   E.C. PHASE        BR                  BZ
 0.8869102E+10  0.8538283E+00  0.2450000E+00  0.1100000E+00
VØL FZ AMP       VØL FZ PHASE      VØL FR AMP        VØL FR PHASE
 0.2172930E+10  0.8538283E+00  0.9756012E+09  0.8538283E+00
-0.1427837E+10 -0.1637958E+10 -0.6410697E+09 -0.7354097E+09
R                    Z
 0.1500000E-01 -0.5000000E-03
E.C. AMPLITUDE   E.C. PHASE        BR                  BZ
 0.2029189E+10 -0.5966546E+00  0.2450000E+00  0.1100000E+00
VØL FZ AMP       VØL FZ PHASE      VØL FR AMP        VØL FR PHASE
 0.4971514E+09 -0.5966546E+00  0.2232108E+09 -0.5966546E+00
-0.4112536E+09  0.2793386E+09 -0.1846445E+09  0.1254173E+09
SURFS PZ AMP     SURFS PZ PHASE    SURFS PR AMP      SURFS PR PHASE
 0.5252032E+06  0.7678920E-01  0.2358055E+06  0.7678920E-01
REAL PT ØF PZ    IMAG PT ØF PZ     REAL PT ØF PR     IMAG PT ØF PR
-0.5236555E+06 -0.4029031E+05 -0.2351106E+06 -0.1808953E+05
                          ****************
R                    Z
 0.1550000E-01  0.0000000E+00
E.C. AMPLITUDE   E.C. PHASE        BR                  BZ
 0.6198375E+10  0.7982939E+00  0.2450000E+00  0.1100000E+00
VØL FZ AMP       VØL FZ PHASE      VØL FR AMP        VØL FR PHASE
 0.1518602E+10  0.7982939E+00  0.6818212E+09  0.7982939E+00
-0.1059877E+10 -0.1087572E+10 -0.4758632E+09 -0.4882974E+09
R                    Z
 0.1550000E-01 -0.5000000E-03
E.C. AMPLITUDE   E.C. PHASE        BR                  BZ
 0.1477272E+10 -0.6616855E+00  0.2450000E+00  0.1100000E+00
VØL FZ AMP       VØL FZ PHASE      VØL FR AMP        VØL FR PHASE
 0.3619315E+09 -0.6616855E+00  0.1624999E+09 -0.6616855E+00
-0.2855487E+09  0.2223879E+09 -0.1282055E+09  0.9984764E+08
SURFS PZ AMP     SURFS PZ PHASE    SURFS PR AMP      SURFS PR PHASE
 0.3710245E+06  0.3950428E-02  0.1665824E+06  0.3950429E-02
REAL PT ØF PZ    IMAG PT ØF PZ     REAL PT ØF PR     IMAG PT ØF PR
-0.3710216E+06 -0.1465702E+04 -0.1665811E+06 -0.6580703E+03
                          ****************
R                    Z
 0.1600000E-01  0.0000000E+00
E.C. AMPLITUDE   E.C. PHASE        BR                  BZ
 0.4254915E+10  0.7670198E+00  0.2450000E+00  0.1100000E+00
VØL FZ AMP       VØL FZ PHASE      VØL FR AMP        VØL FR PHASE
 0.1042454E+10  0.7670198E+00  0.4680407E+09  0.7670198E+00
-0.7505483E+09 -0.7234556E+09 -0.3369809E+09 -0.3248168E+09
R                    Z
 0.1600000E-01 -0.5000000E-03
E.C. AMPLITUDE   E.C. PHASE        BR                  BZ
 0.1014256E+10 -0.7083891E+00  0.2450000E+00  0.1100000E+00
VØL FZ AMP       VØL FZ PHASE      VØL FR AMP        VØL FR PHASE
 0.2484927E+09 -0.7083891E+00  0.1115681E+09 -0.7083891E+00
-0.1887081E+09  0.1616721E+09 -0.8472607E+08  0.7258749E+08
SURFS PZ AMP     SURFS PZ PHASE    SURFS PR AMP      SURFS PR PHASE
 0.2533408E+06 -0.3263808E-01  0.1137448E+06 -0.3263808E-01
REAL PT ØF PZ    IMAG PT ØF PZ     REAL PT ØF PR     IMAG PT ØF PR
-0.2532058E+06  0.8267089E+04 -0.1136843E+06  0.3711754E+04
                          ****************
```

APPENDIX C

Derivation of Elastic Wave Fields Produced by Eddy-Current Surface Forces

Derivation of Elastic Wave Fields Produced by Eddy-Current Surface Forces

In this appendix, the equations that are suitable for calculation of elastic wave fields produced by eddy-current surface forces are derived by use of a Green's function. A surface force produced by interaction of a magnetic field and eddy currents has two components. One is a vertical component and the other is a horizontal and radial component. Both forces distribute symmetrically around the axis (see Fig. 7). In this sense, the equations for vertical force derived here are generalizations of the equations obtained by Miller and Pursey.[1] The equations for the horizontal radial force are also derived by the same method.

Useful references on the theory of elastic waves are by Ewing et al.[2] and by Morse and Feshbach.[3]

Elastic Wave Equation

The standard form for the elastic wave equations in the absence of body forces is

$$\rho \frac{\partial^2 \vec{S}}{\partial t^2} = (\lambda + 2\mu)\nabla(\nabla\cdot\vec{S}) - \mu\nabla \times (\nabla \times \vec{S}) \quad , \tag{C1}$$

where $\vec{S}$ = displacement vector,
λ, μ = Lamé constants, and
ρ = density.

A displacement vector can be represented as the sum of an irrotational vector, $\vec{S}_\ell$, and a solenoidal vector, $\vec{S}_t$:

$$\vec{S} = \vec{S}_\ell + \vec{S}_t \tag{C2}$$

$$\nabla \times \vec{S}_\ell = 0$$

$$\nabla\cdot\vec{S}_t = 0$$

---

[1]F. Miller and H. Pursey, "The Field and Radiation Impedance of Mechanical Radiators on the Free Surface of a Semi-infinite Isotropic Solid," *Proc. Roy. Soc. London Ser. A* 223: 521–41 (1954).

[2]W. M. Ewing, W. S. Jardetzky, and F. Press, *Elastic Waves in Layered Media*, McGraw-Hill, New York, 1957.

[3]P. M. Morse and H. Feshbach, *Methods of Theoretical Physics*, McGraw-Hill, New York, 1953.

Vectors $\vec{S}_\ell$ and $\vec{S}_t$ can be represented as the gradient of a scalar potential ϕ and the curl of a vector potential $\vec{W}$, respectively.

$$\vec{S}_\ell = \nabla\phi \quad , \tag{C3a}$$

$$\vec{S}_t = \nabla \times \vec{W} \quad . \tag{C3b}$$

Substituting Eq. (C2) into Eq. (C1) gives

$$\rho \frac{\partial^2 \vec{S}_\ell}{\partial t^2} + \rho \frac{\partial^2 \vec{S}_t}{\partial t^2} = (\lambda + 2\mu)\nabla(\nabla\cdot\vec{S}_\ell) - \mu\nabla \times (\nabla \times \vec{S}_t) \tag{C4}$$

Introducing a separation constant vector $\vec{X}$ divides Eq. (C4) into two equations:

$$\begin{cases} \rho \dfrac{\partial^2 \vec{S}_\ell}{\partial t^2} = (\lambda + 2\mu)\nabla(\nabla\cdot\vec{S}_\ell) + \vec{X} & \text{(C5a)} \\[2ex] \rho \dfrac{\partial^2 \vec{S}_t}{\partial t^2} = -\mu\nabla \times (\nabla \times \vec{S}_t) - \vec{X} & \text{(C5b)} \end{cases}$$

Substituting Eq. (C3a) into Eq. (C5a) gives

$$\rho \frac{\partial^2}{\partial t^2} \nabla\phi = (\lambda + 2\mu)\nabla(\nabla^2\phi) + \vec{X} \tag{C6}$$

Assuming ϕ is time harmonic, Eq. (C6) becomes

$$-\rho\omega^2\nabla\phi = (\lambda + 2\mu)\nabla(\nabla^2\phi) + \vec{X} \tag{C7}$$

Assuming ϕ can be represented as the sum of ϕ_1 and ϕ_2, and $\nabla\phi_2 = -\vec{X}/\rho\omega^2$, Eq. (C7) becomes

$$-\rho\omega^2\nabla\phi_1 - \rho\omega^2\nabla\phi_2 = (\lambda + 2\mu)\nabla(\nabla^2\phi_1) + (\lambda + 2\mu)\nabla(\nabla^2\phi_2) + \vec{X} \ .$$

Therefore,

$$-\rho\omega^2\nabla\phi_1 + \vec{X} = (\lambda + 2\mu)\nabla(\nabla^2\phi_1) + (\lambda + 2\mu)\nabla(-\nabla\cdot\vec{X}/\rho\omega^2) + \vec{X} \ ,$$

or

$$-\rho\omega^2\nabla\phi_1 = (\lambda + 2\mu)\nabla(\nabla^2\phi_1) \ ,$$

so

$$\nabla\left[\rho\omega^2\phi_1 + (\lambda + 2\mu)\nabla^2\phi_1\right] = 0 \ .$$

Then

$$\rho\omega^2\phi_1 + (\lambda + 2\mu)\nabla^2\phi_1 = \phi_{\mathcal{C}} \qquad (\nabla\phi_{\mathcal{C}} = 0) \ . \tag{C8}$$

Assuming ϕ_1 can be represented as the sum of ϕ_{11} and ϕ_{12} ($\phi_{12} = \phi_{\mathcal{C}}/\rho\omega^2$), Eq. (C8) becomes

$$\rho\omega^2\phi_{11} + \rho\omega^2\phi_{12} + (\lambda + 2\mu)\nabla^2\phi_{11} + (\lambda + 2\mu)\nabla^2\phi_{12} = \phi_{\mathcal{C}} \ ,$$

or

$$\rho\omega^2\phi_{11} + \phi_{\mathcal{C}} + (\lambda + 2\mu)\nabla^2\phi_{11} + (\lambda + 2\mu)\nabla^2(\phi_{\mathcal{C}}/\rho\omega^2) = \phi_{\mathcal{C}} \ ,$$

so

$$\rho\omega^2\phi_{11} + (\lambda + 2\mu)\nabla^2\phi_{11} = 0 \ . \tag{C9}$$

Summarizing the procedure from Eq. (C5a) to Eq. (C9), we have

$$\begin{aligned} \phi &= \phi_1 + \phi_2 & \nabla\phi_2 &= -\vec{X}/\rho\omega^2 \\ &= \phi_{11} + \phi_{12} + \phi_2 & \phi_{12} &= \phi_{\mathcal{C}}/\rho\omega^2 \end{aligned}$$

$$\rho\omega^2\phi_{11} + (\lambda + 2\mu)\nabla^2\phi_{11} = 0 \ . \tag{C9}$$

$$\begin{aligned} \vec{S}_{\ell} &= \nabla\phi \\ &= \nabla(\phi_{11} + \phi_{12} + \phi_2) \\ &= \nabla\phi_{11} + \nabla\phi_{12} + \nabla\phi_2 \\ &= \nabla\phi_{11} + \nabla(\phi_{\mathcal{C}}/\rho\omega^2) - \vec{X}/\rho\omega^2 \\ &= \nabla\phi_{11} - \vec{X}/\rho\omega^2 \ . \end{aligned} \tag{C10}$$

Vector $\vec{W}$ is analyzed similarly:

$$\vec{W} = \vec{W}_1 + \vec{W}_2 = \vec{W}_{11} + \vec{W}_{12} + \vec{W}_2$$

$$\left(\nabla \times \vec{W}_2 = \vec{X}/\rho\omega^2 \ , \ \vec{W}_{12} = \vec{W}_c/\rho\omega^2\right) \ ;$$

$$\rho\omega^2\vec{W}_{11} - \mu\nabla \times (\nabla \times \vec{W}_{11}) = 0 \ ; \tag{C11}$$

$$\vec{S}_t = \nabla \times \vec{W}_{11} + \vec{X}/\rho\omega^2 \ . \tag{C12}$$

From Eqs. (C10) and (C11) we learn that we cannot know $\vec{S}_\ell$ and $\vec{S}_t$ individually because of the unknown vector $\vec{X}$. However, we know the sum of two vectors.

$$\begin{aligned}\vec{S} &= \vec{S}_\ell + \vec{S}_t \\ &= \nabla\phi + \nabla \times \vec{W} \\ &= \nabla\phi_{11} - \vec{X}/\rho\omega^2 + \nabla \times W_{11} + \vec{X}/\rho\omega^2 \\ &= \nabla\phi_{11} + \nabla \times \vec{W}_{11} \ .\end{aligned} \tag{C13}$$

The problem is solved in a cylindrical coordinate system under the assumption of axial symmetry. The force produced by the eddy currents has only radial and vertical components, which produce only the same components of the displacement vector. Consequently, $\vec{W}_{11}$ has only an azimuthal component, W_{11}, and both $\partial W_{11}/\partial\theta$ and $\partial\phi_{11}/\partial\theta$ are equal to zero. On the above mentioned assumptions, Eqs. (C9) and (C11) become

$$\left(\frac{\partial^2}{\partial r^2} + \frac{1}{r}\frac{\partial}{\partial r} + \frac{\partial^2}{\partial z^2}\right)\phi_{11} + \kappa_c{}^2\phi_{11} = 0 \ , \tag{C14}$$

where

$$\kappa_c{}^2 = \rho\omega^2/(\lambda + 2\mu) \ .$$

$$\left(\frac{\partial^2}{\partial r^2} + \frac{1}{r}\frac{\partial}{\partial r} - \frac{1}{r^2} + \frac{\partial^2}{\partial z^2}\right)W_{11} + \kappa_s{}^2 W_{11} = 0 \ , \tag{C15}$$

where

$$\kappa_s{}^2 = \rho\omega^2/\mu \ .$$

Boundary Conditions

The general boundary conditions are the continuity of the displacement and the stresses at the boundary. If one medium is a vacuum, we need only the continuity of the normal and tangential stresses. The stress equations in cylindrical coordinates are

$$\sigma_{zz} = \lambda\left[\frac{1}{r}\frac{\partial}{\partial r}\left(r\frac{\partial\phi}{\partial r}\right) + \frac{\partial^2\phi}{\partial z^2}\right] + 2\mu\frac{\partial S_z}{\partial z}$$

$$= \lambda\left[\frac{1}{r}\frac{\partial}{\partial r}\left(r\frac{\partial\phi_{11}}{\partial r}\right) + \frac{\partial^2\phi_{11}}{\partial z^2}\right] + 2\mu\frac{\partial}{\partial z}\left[\frac{\partial\phi_{11}}{\partial z} + \frac{1}{r}\frac{\partial}{\partial r}(rW_{11})\right] \quad \text{(C16)}$$

$$\tau_{zr} = \mu\left(\frac{\partial S_r}{\partial z} + \frac{\partial S_z}{\partial r}\right)$$

$$= \mu\left[\frac{\partial}{\partial z}\left(\frac{\partial\phi_{11}}{\partial r} - \frac{\partial W_{11}}{\partial z}\right) + \frac{\partial}{\partial r}\left(\frac{\partial\phi_{11}}{\partial z} + \frac{1}{r}\frac{\partial}{\partial r}rW_{11}\right)\right] . \quad \text{(C17)}$$

σ_{zz} = normal stress on a plane of constant z,

τ_{zr} = r component of tangential stress on a plane of constant z.

If an elastic solid occupies an infinite half space, the stresses must satisfy the following equations:

$$\begin{cases} \sigma_{zz} = P_z \text{ at } z = 0 , & \text{(C18)} \\ \tau_{zr} = P_r \text{ at } z = 0 , & \text{(C19)} \end{cases}$$

where P_z and P_r are respectively the normal and tangential components of the surface force. Now, we solve the homogenous equations (C14) and (C15) with the inhomogenous boundary conditions (C18) and (C19).

Green's Function

We solve the problem by the method of Green's function. First of all, the surface force is assumed to act only on a ring of radius a. Then we get a final solution by superimposing Green's functions:

$$\left(\frac{\partial^2}{\partial r^2} + \frac{1}{r}\frac{\partial}{\partial r} + \frac{\partial^2}{\partial z^2}\right)\phi_G + \kappa_c{}^2\phi_G = 0 \ , \tag{C20}$$

$$\left(\frac{\partial^2}{\partial r^2} + \frac{1}{r}\frac{\partial}{\partial r} - \frac{1}{r^2} + \frac{\partial^2}{\partial z^2}\right)W_G + \kappa_s{}^2 W_G = 0 \ , \tag{C21}$$

where ϕ_G and W_G are Green's functions of Eqs. (C14) and (C15), respectively. The boundary conditions become

$$\begin{cases} \sigma_{zz} = P_z\delta(r - a) \ \text{ at } z = 0 \ , & \text{(C22)} \\ \tau_{zr} = P_r\delta(r - a) \ \text{ at } z = 0 \ . & \text{(C23)} \end{cases}$$

Setting $\phi_G(r,z) = R(r)Z(z)$ in Eq. (C20) gives

$$\frac{1}{R}\frac{\partial^2 R}{\partial r^2} + \frac{1}{rR}\frac{\partial R}{\partial r} + \frac{1}{Z}\frac{\partial^2 Z}{\partial z^2} + \kappa_c{}^2 = 0 \ . \tag{C24}$$

Introducing the separation constant α^2,

$$\frac{1}{Z}\frac{\partial^2 Z}{\partial z^2} + \kappa_c{}^2 = \alpha^2 \ .$$

Then

$$Z = C_1' \exp(-\alpha_c z) + C_2' \exp(\alpha_c z) \ ,$$

where

$$\alpha_c = \sqrt{\alpha^2 - \kappa_c{}^2} \ ;$$

C_2' should be zero for convergence of Z at infinity. Then

$$\frac{1}{R}\frac{\partial^2 R}{\partial r^2} + \frac{1}{rR}\frac{\partial R}{\partial r} = -\alpha^2$$

$$\frac{\partial^2 R}{\partial r^2} + \frac{1}{r}\frac{\partial R}{\partial r} + \alpha^2 R = 0 \ .$$

This is a Bessel equation of order zero, a solution of which is

$$R = C_3' J_0(\alpha r) + C_4' Y_0(\alpha r) \ .$$

Because of the divergence of Y_0 at the origin, C_4' has to be zero. Thus, the general solution of Eq. (C20) is

$$\phi_G(r,z) = \int_0^\infty C_1'(\alpha)\ \exp(-\alpha_c z) C_3' J_0(\alpha r)\ d\alpha$$

$$= \int_0^\infty C_1\ \exp(-\alpha_c z) J_0(\alpha r)\ d\alpha\ . \tag{C25}$$

The general solution for Eq. (C22) is obtained in a similar manner:

$$W_G(r,z) = \int_0^\infty C_3(\alpha)\ \exp(-\alpha_s z) J_1(\alpha r)\ d\alpha\ , \tag{C26}$$

where

$$\alpha_s = \sqrt{\alpha^2 - \kappa_s^2}\ .$$

Substituting Eqs. (C25) and (C26) into Eqs. (C16) and (C17) gives

$$\sigma_{zz} = \lambda\left[\frac{1}{r}\frac{\partial}{\partial r} r \frac{\partial}{\partial r}\int_0^\infty C_1(\alpha)\ \exp(-\alpha_c z) J_0(\alpha r)\ d\alpha\right.$$

$$\left. + \frac{\partial^2}{\partial z^2}\int_0^\infty C_1(\alpha)\ \exp(-\alpha_c z) J_0(\alpha r)\ d\alpha\right]$$

$$+ 2\mu\left[\frac{\partial^2}{\partial z^2}\int_0^\infty C_1(\alpha)\ \exp(-\alpha_c z) J_0(\alpha r)\ d\alpha\right.$$

$$\left. + \frac{\partial}{\partial z}\frac{1}{r}\frac{\partial}{\partial r} r \int_0^\infty C_3(\alpha)\ \exp(-\alpha_s z) J_1(\alpha r)\ d\alpha\right]$$

$$= \lambda\int_0^\infty C_1(\alpha)\ \exp(-\alpha_c z)\frac{1}{r}\frac{\partial}{\partial r} r \frac{\partial}{\partial r} J_0(\alpha r)\ d\alpha$$

$$+ (\lambda + 2\mu)\int_0^\infty \frac{\partial^2}{\partial z^2} C_1(\alpha)\ \exp(-\alpha_c z) J_0(\alpha r)\ d\alpha$$

$$+ 2\mu\int_0^\infty \frac{\partial}{\partial z} C_3(\alpha)\ \exp(-\alpha_s z)\frac{1}{r}\frac{\partial}{\partial r} r J_1(\alpha r)\ d\alpha$$

$$= \lambda\int_0^\infty C_1(\alpha)\ \exp(-\alpha_c z)(-\alpha^2) J_0(\alpha r)\ d\alpha$$

$$+ (\lambda + 2\mu)\int_0^\infty \alpha_c^2 C_1(\alpha)\ \exp(-\alpha_c z) J_0(\alpha r)\ d\alpha$$

$$+ 2\mu\int_0^\infty -\alpha_s C_3(\alpha)\ \exp(-\alpha_s z)\alpha J_0(\alpha r)\ d\alpha$$

$$= \int_0^\infty \left\{\left[(\lambda + 2\mu)\alpha_c^2 - \lambda\alpha^2\right] C_1(\alpha)\ \exp(-\alpha_c z) - 2\mu\alpha\alpha_s C_3(\alpha)\ \exp(-\alpha_s z)\right\} J_0(\alpha r)\ d\alpha$$

$$= \int_0^\infty \left[\mu(2\alpha^2 - \kappa_s^2) C_1(\alpha)\ \exp(-\alpha_c z) - 2\mu\alpha\alpha_s C_3(\alpha)\ \exp(-\alpha_s z)\right] J_0(\alpha r)\ d\alpha$$

$$= \mu\int_0^\infty \left[(2\alpha^2 - \kappa_s^2) C_1(\alpha)\ \exp(-\alpha_c z) - 2\alpha\alpha_s C_3(\alpha)\ \exp(-\alpha_s z)\right] J_0(\alpha r)\ d\alpha\ . \tag{C27}$$

$$\tau_{zr} = \mu \left[\frac{\partial}{\partial z} \frac{\partial}{\partial r} \int_0^\infty C_1(\alpha) \ \exp(-\alpha_c z) J_0(\alpha r) \ d\alpha \right.$$

$$- \frac{\partial^2}{\partial z^2} \int_0^\infty C_3(\alpha) \ \exp(-\alpha_s z) J_1(\alpha r) \ d\alpha$$

$$+ \frac{\partial}{\partial r} \frac{\partial}{\partial z} \int_0^\infty C_1(\alpha) \ \exp(-\alpha_c z) J_0(\alpha r) \ d\alpha$$

$$\left. + \frac{\partial}{\partial r} \frac{1}{r} \frac{\partial}{\partial r} r \int_0^\infty C_3(\alpha) \ \exp(-\alpha_s z) J_1(\alpha r) \ d\alpha \right]$$

$$= \mu \left\{ \int_0^\infty \frac{\partial}{\partial z} \left[C_1(\alpha) \ \exp(-\alpha_c z) \right] \frac{\partial}{\partial r} J_0(\alpha r) \ d\alpha \right.$$

$$- \int_0^\infty \frac{\partial^2}{\partial z^2} C_3(\alpha) \ \exp(-\alpha_s z) J_1(\alpha r) \ d\alpha$$

$$+ \int_0^\infty \frac{\partial}{\partial z} C_1(\alpha) \ \exp(-\alpha_c z) \ \frac{\partial}{\partial r} J_0(\alpha r) \ d\alpha$$

$$\left. + \int_0^\infty C_3(\alpha) \ \exp(-\alpha_s z) \ \frac{\partial}{\partial r} \frac{1}{r} \frac{\partial}{\partial r} r J_1(\alpha r) \ d\alpha \right\}$$

$$= \mu \left\{ \int_0^\infty -\alpha_c C_1(\alpha) \ \exp(-\alpha_c z) \left[-\alpha J_1(\alpha r) \right] \ d\alpha \right.$$

$$- \int_0^\infty \alpha_s{}^2 C_3(\alpha) \ \exp(-\alpha_s z) J_1(\alpha r) \ d\alpha$$

$$+ \int_0^\infty -\alpha_c C_1(\alpha) \ \exp(-\alpha_c z) \left[-\alpha J_1(\alpha r) \right] \ d\alpha$$

$$\left. + \int_0^\infty C_3(\alpha) \ \exp(-\alpha_s z) \left[-\alpha^2 J_1(\alpha r) \right] \ d\alpha \right\}$$

$$= \mu \int_0^\infty \left[2\alpha\alpha_c C_1(\alpha) \ \exp(-\alpha_c z) - (\alpha_s{}^2 + \alpha^2) C_3(\alpha) \ \exp(-\alpha_s z) \right] J_1(\alpha r) \ d\alpha$$

$$= \mu \int_0^\infty \left[2\alpha\alpha_c C_1(\alpha) \ \exp(-\alpha_c z) - (2\alpha^2 - \kappa_s{}^2) C_3(\alpha) \ \exp(-\alpha_s z) \right] J_1(\alpha r) \ d\alpha \ . \qquad \text{(C28)}$$

Substituting Eqs. (C27) and (C28) into Eqs. (C22) and (C23):

$$\mu \int_0^\infty \left[(2\alpha^2 - \kappa_s{}^2)C_1(\alpha) - 2\alpha\alpha_s C_3(\alpha)\right] J_0(\alpha r)\ d\alpha = P_z \delta(r - a) \ . \tag{C29}$$

$$\mu \int_0^\infty \left[2\alpha\alpha_c C_1(\alpha) - (2\alpha^2 - \kappa_s{}^2)C_3(\alpha)\right] J_1(\alpha r)\ d\alpha = P_r \delta(r - a) \ . \tag{C30}$$

Multiplying both sides of Eq. (C29) by

$$\int_0^\infty rJ_0(\alpha' r)\ dr$$

and then reversing the order of integration, we obtain

$$\mu \int_0^\infty \frac{1}{\alpha}\left[(2\alpha^2 - \kappa_s{}^2)C_1(\alpha) - 2\alpha\alpha_s C_3(\alpha)\right] \int_0^\infty J_0(\alpha r) J_0(\alpha' r)\alpha r\ dr\ d\alpha = \int_0^\infty P_z \delta(r - a) rJ_0(\alpha' r)\ dr \ . \tag{C31}$$

By use of the Fourier-Bessel equation, Eq. (C31) becomes

$$\mu \frac{1}{\alpha'}\left[(2\alpha'^2 - \kappa_s{}^2)C_1(\alpha') - 2\alpha'\alpha_s' C_3(\alpha')\right] = P_z a J_0(\alpha' a) \ , \tag{C32}$$

where $\alpha_c'^2 = \alpha'^2 - \kappa_s{}^2$ and $\alpha_s'^2 = \alpha'^2 - \kappa_c{}^2$.

Dropping the primes:

$$(2\alpha^2 - \kappa_s{}^2)C_1(\alpha) - 2\alpha\alpha_s C_3(\alpha) = P_z \alpha a J_0(\alpha a)/\mu \ . \tag{C33}$$

Similarly, Eq. (C30) becomes

$$2\alpha\alpha_c C_1(\alpha) - (2\alpha^2 - \kappa_s{}^2)C_3(\alpha) = P_r \alpha a J_1(\alpha a)/\mu \ . \tag{C34}$$

From Eqs. (C33) and (C34) we can find the unknown coefficients $C_1(\alpha)$ and $C_3(\alpha)$:

$$C_1(\alpha) = \frac{(2\alpha^2 - \kappa_s{}^2)P_z \alpha a J_0(\alpha a)/\mu - 2\alpha\alpha_s P_r \alpha a J_1(\alpha a)/\mu}{(2\alpha^2 - \kappa_s{}^2)^2 - 4\alpha^2\alpha_c\alpha_s} \ ,$$

$$C_3(\alpha) = \frac{2\alpha\alpha_c P_z \alpha a J_0(\alpha a)/\mu - (2\alpha^2 - \kappa_s{}^2)P_r \alpha a J_1(\alpha a)/\mu}{(2\alpha^2 - \kappa_s{}^2)^2 - 4\alpha^2\alpha_c\alpha_s} \ .$$

If we let

$$\Delta = (2\alpha^2 - \kappa_s{}^2)^2 - 4\alpha^2\alpha_c\alpha_s$$

$$= (2\alpha^2 - \kappa_s{}^2)^2 - 4\alpha^2\sqrt{\alpha^2 - \kappa_c{}^2}\,\sqrt{\alpha^2 - \kappa_s{}^2} \quad ,$$

then

$$\phi_G(r,z) = \int_0^\infty C_1(\alpha)\ \exp(-\alpha_c z)J_0(\alpha r)\ d\alpha$$

$$= \int_0^\infty \left[\frac{2\alpha^2 - \kappa_s{}^2}{\Delta}\,\frac{P_z}{\mu}\,\alpha a J_0(\alpha a) - \frac{2\alpha\alpha_s}{\Delta}\,\frac{P_r}{\mu}\,\alpha a J_1(\alpha a)\right] \exp(-\alpha_c z)J_0(\alpha r)\ d\alpha \ .$$

ϕ_{11} is obtained by integrating the Green's function:

$$\phi_{11}(r,z) = \int_0^\infty \phi_G\ da$$

$$= \int_0^\infty\int_0^\infty \frac{2\alpha^2 - \kappa_s{}^2}{\Delta}\,\frac{P_z}{\mu}\,\alpha a J_0(\alpha a)\ \exp(-\alpha_c z)J_0(\alpha r)\ d\alpha\ da$$

$$= \int_0^\infty\int_0^\infty \frac{2\alpha\alpha_s}{\Delta}\,\frac{P_r}{\mu}\,\alpha a J_1(\alpha a)\ \exp(-\alpha_c z)J_0(\alpha r)\ d\alpha\ da \ .$$

Reversing the order of integration gives

$$\phi_{11}(r,z) = \frac{1}{\mu}\left[\int_0^\infty \frac{2\alpha^2 - \kappa_s{}^2}{\Delta}\ \exp(-\alpha_c z)J_0(\alpha r)\ d\alpha \int_0^\infty P_z \alpha a J_0(\alpha a)\ da\right.$$

$$\left. - \int_0^\infty \frac{2\alpha\alpha_s}{\Delta}\ \exp(-\alpha_c z)J_0(\alpha r)\ d\alpha \int_0^\infty P_r \alpha a J_1(\alpha a)\ da\right] \ . \qquad \text{(C35)}$$

One obtains W_G and W_{11} similarly:

$$W_G(r,z) = \int_0^\infty C_3(\alpha)\ \exp(-\alpha_s z) J_1(\alpha r)\ d\alpha$$

$$= \int_0^\infty \left[\frac{2\alpha\alpha_c}{\Delta} \frac{P_z}{\mu} \alpha a J_0(\alpha a) - \frac{(2\alpha^2 - \kappa_s^2)}{\Delta} \frac{P_r}{\mu} \alpha a J_1(\alpha a) \right] \exp(-\alpha_s z) J_1(\alpha r)\ d\alpha\ .$$

Then

$$W_{11}(r,z) = \int_0^\infty W_G\ da$$

$$= \int_0^\infty \int_0^\infty \frac{2\alpha\alpha_c}{\Delta} \frac{P_z}{\mu} \alpha a J_1(\alpha a)\ \exp(-\alpha_s z) J_1(\alpha r)\ d\alpha\ da$$

$$- \int_0^\infty \int_0^\infty \frac{2\alpha^2 - \kappa_s^2}{\Delta} \frac{P_r}{\mu} \alpha a J_1(\alpha a)\ \exp(-\alpha_s z) J_1(\alpha r)\ d\alpha\ da\ .$$

Reversing the order of integration gives

$$W_{11}(r,z) = \frac{1}{\mu} \left[\int_0^\infty \frac{2\alpha\alpha_c}{\Delta} \exp(-\alpha_s z) J_1(\alpha r)\ d\alpha \int_0^\infty P_z(a) \alpha a J_0(\alpha a)\ da \right.$$

$$\left. - \int_0^\infty \frac{2\alpha^2 - \kappa_s^2}{\Delta} \exp(-\alpha_s z) J_1(\alpha r)\ d\alpha \int_0^\infty P_r(a) \alpha a J_1(\alpha a)\ da \right] . \qquad \text{(C36)}$$

Displacement Vector

The displacement is obtained by substituting ϕ_{11} and W_{11} into Eq. (C13):

$$S_z = \frac{\partial \varphi_{11}}{\partial z} + \frac{1}{r}\frac{\partial}{\partial r}(r, W_{11})$$

$$= \frac{\partial}{\partial z}\frac{1}{\mu}\left[\int_0^\infty \frac{2\alpha^2 - \kappa_s^2}{\Delta} \exp(-\alpha_c z) J_0(\alpha r)\, d\alpha \int_0^\infty P_z(a)\alpha a J_0(\alpha a)\, da\right.$$

$$\left. - \int_0^\infty \frac{2\alpha\alpha_s}{\Delta} \exp(-\alpha_c z) J_0(\alpha r)\, d\alpha \int_0^\infty P_r(a)\alpha a J_1(\alpha a)\, da\right]$$

$$+ \frac{1}{r}\frac{\partial}{\partial r} r \frac{1}{\mu}\left[\int_0^\infty \frac{2\alpha\alpha_c}{\Delta} \exp(-\alpha_s z) J_1(\alpha r)\, d\alpha \int_0^\infty P_z(a)\alpha a J_0(\alpha a)\, da\right.$$

$$\left. - \int_0^\infty \frac{2\alpha^2 - \kappa_s^2}{\Delta} \exp(-\alpha_s z) J_1(\alpha r)\, d\alpha \int_0^\infty P_r(a)\alpha a J_1(\alpha a)\, da\right]$$

$$= \frac{1}{\mu}\left[\int_0^\infty -\frac{2\alpha^2 - \kappa_s^2}{\Delta}\alpha_c \exp(-\alpha_c z) J_0(\alpha r)\, d\alpha \int_0^\infty P_z(a)\alpha a J_0(\alpha a)\, da\right.$$

$$\left. - \int_0^\infty -\frac{2\alpha\alpha_s}{\Delta}\alpha_c \exp(-\alpha_c z) J_0(\alpha r)\, d\alpha \int_0^\infty P_r(a)\alpha a J_1(\alpha a)\, da\right]$$

$$+ \frac{1}{\mu}\left[\int_0^\infty \frac{2\alpha\alpha_c}{\Delta} \exp(-\alpha_s z)\alpha J_0(\alpha r)\, d\alpha \int_0^\infty P_z(a)\alpha a J_0(\alpha a)\, da\right.$$

$$\left. - \int_0^\infty \frac{2\alpha^2 - \kappa_s^2}{\Delta} \exp(-\alpha_s z)\alpha J_0(\alpha r)\, d\alpha \int_0^\infty P_r(a)\alpha a J_1(\alpha a)\, da\right]$$

$$= \frac{1}{\mu}\int_0^\infty \frac{\alpha_c}{\Delta}\left[(\kappa_s^2 - 2\alpha^2)\exp(-\alpha_c z) + 2\alpha^2 \exp(-\alpha_s z)\right] J_0(\alpha r)\, d\alpha \int_0^\infty P_z(a)\alpha a J_0(\alpha a)\, da$$

$$+ \frac{1}{\mu}\int_0^\infty \frac{\alpha}{\Delta}\left[2\alpha_s\alpha_c \exp(-\alpha_c z) + (\kappa_s^2 - 2\alpha^2)\exp(-\alpha_s z)\right] J_0(\alpha r)\, d\alpha \int_0^\infty P_r(a)\alpha a J_1(\alpha a)\, da\ .$$

$$S_r = \frac{\partial \phi_{11}}{\partial r} - \frac{\partial W_{11}}{\partial z}$$

$$= \frac{\partial}{\partial r}\frac{1}{\mu}\left[\int_0^\infty \frac{2\alpha^2 - \kappa_s^2}{\Delta} \exp(-\alpha_c z) J_0(\alpha r)\ d\alpha \int_0^\infty P_z(a)\alpha a J_0(\alpha a)\ da\right.$$

$$\left. - \int_0^\infty \frac{2\alpha\alpha_s}{\Delta} \exp(-\alpha_c z) J_0(\alpha r)\ d\alpha \int_0^\infty P_r(a)\alpha a J_1(\alpha a)\ da\right]$$

$$- \frac{\partial}{\partial z}\frac{1}{\mu}\left[\int_0^\infty \frac{2\alpha\alpha_c}{\Delta} \exp(-\alpha_s z) J_1(\alpha r)\ d\alpha \int_0^\infty P_z(a)\alpha a J_0(\alpha a)\ da\right.$$

$$\left. - \int_0^\infty \frac{2\alpha^2 - \kappa_s^2}{\Delta} \exp(-\alpha_s z) J_1(\alpha r)\ d\alpha \int_0^\infty P_r(a)\alpha a J_1(\alpha a)\ da\right]$$

$$= \frac{1}{\mu}\left\{\int_0^\infty \frac{2\alpha^2 - \kappa_s^2}{\Delta} \exp(-\alpha_c z)\left[-\alpha J_1(\alpha r)\right]\ d\alpha \int_0^\infty P_z(a)\alpha a J_0(\alpha a)\ da\right.$$

$$\left. - \int_0^\infty \frac{2\alpha\alpha_s}{\Delta} \exp(-\alpha_c z)\left[-\alpha J_1(\alpha r)\right]\ d\alpha \int_0^\infty P_r(a)\alpha a J_1(\alpha a)\ da\right\}$$

$$- \frac{1}{\mu}\left\{\int_0^\infty \frac{2\alpha\alpha_c}{\Delta}\left[-\alpha_s \exp(-\alpha_s z)\right] J_1(\alpha r)\ d\alpha \int_0^\infty P_z(a)\alpha a J_0(\alpha a)\ da\right.$$

$$\left. - \int_0^\infty \frac{2\alpha^2 - \kappa_s^2}{\Delta}\left[-\alpha_s \exp(-\alpha_s z)\right] J_1(\alpha r)\ d\alpha \int_0^\infty P_r(a)\alpha a J_1(\alpha a)\ da\right\}$$

$$= \frac{1}{\mu}\int_0^\infty \frac{\alpha}{\Delta}\left[(\kappa_s^2 - 2\alpha^2) \exp(-\alpha_c z) + 2\alpha_c\alpha_s \exp(-\alpha_s z)\right] J_1(\alpha r)\ d\alpha \int_0^\infty P_z(a)\alpha a J_0(\alpha a)\ da$$

$$+ \frac{1}{\mu}\int_0^\infty \frac{\alpha_s}{\Delta}\left[2\alpha^2 \exp(-\alpha_c z) + (\kappa_s^2 - 2\alpha^2) \exp(-\alpha_s z)\right] J_1(\alpha r)\ d\alpha \int_0^\infty P_r(a)\alpha a J_1(\alpha a)\ da\ .$$

Therefore:

$$S_z = \frac{1}{\mu}\int_0^\infty \frac{\sqrt{\alpha^2 - \kappa_c^2}}{(2\alpha^2 - \kappa_s^2)^2 - 4\alpha^2\sqrt{\alpha^2 - \kappa_c^2}\ \sqrt{\alpha^2 - \kappa_s^2}}\left[(\kappa_s^2 - 2\alpha^2) \exp(-\sqrt{\alpha^2 - \kappa_c^2}z)\right.$$

$$\left. + 2\alpha^2 \exp(-\sqrt{\alpha^2 - \kappa_s^2}z)\right] J_0(\alpha r)\ d\alpha \int_0^\infty P_z(a)\alpha a J_0(\alpha a)\ da$$

$$+ \frac{1}{\mu}\int_0^\infty \frac{\alpha}{(2\alpha^2 - \kappa_s^2)^2 - 4\alpha^2\sqrt{\alpha^2 - \kappa_c^2}\ \sqrt{\alpha^2 - \kappa_s^2}}\left[2\sqrt{\alpha^2 - \kappa_c^2}\ \sqrt{\alpha^2 - \kappa_s^2} \exp(-\sqrt{\alpha^2 - \kappa_c^2}z)\right.$$

$$\left. + (\kappa_s^2 - 2\alpha^2) \exp(-\sqrt{\alpha^2 - \kappa_s^2}z)\right] J_0(\alpha r)\ d\alpha \int_0^\infty P_r(a)\alpha a J_1(\alpha a)\ da\ . \qquad \text{(C37)}$$

$$S_r = \frac{1}{\mu}\int_0^\infty \frac{\alpha}{(2\alpha^2-\kappa_s^{\,2})^2 - 4\alpha^2\sqrt{\alpha^2-\kappa_c^{\,2}}\,\sqrt{\alpha^2-\kappa_s^{\,2}}}\Big[(\kappa_s^{\,2}-2\alpha^2)\,\exp(-\sqrt{\alpha^2-\kappa_c^{\,2}}z)$$

$$+\,2\sqrt{\alpha^2-\kappa_c^{\,2}}\,\sqrt{\alpha^2-\kappa_s^{\,2}}\,\exp(-\sqrt{\alpha^2-\kappa_s^{\,2}}z)\Big]J_1(\alpha r)\,d\alpha\int_0^\infty P_z(a)\alpha a J_0(\alpha a)\,da$$

$$+\,\frac{1}{\mu}\int_0^\infty \frac{\sqrt{\alpha^2-\kappa_s^{\,2}}}{(2\alpha^2-\kappa_s^{\,2})^2 - 4\alpha^2\sqrt{\alpha^2-\kappa_c^{\,2}}\,\sqrt{\alpha^2-\kappa_s^{\,2}}}\Big[2\alpha^2\,\exp(-\sqrt{\alpha^2-\kappa_c^{\,2}}z)$$

$$+\,(\kappa_s^{\,2}-2\alpha^2)\,\exp(-\sqrt{\alpha^2-\kappa_s^{\,2}}z)\Big]J_1(\alpha r)\,d\alpha\int_0^\infty P_r(a)\alpha a J_1(\alpha a)\,da\ . \tag{C38}$$

The physical value of the displacement is obtained by taking the real parts:

$$\tilde{S}_z = \text{Real}\left[S_z e^{j\omega t}\right]\ . \tag{C39}$$

$$\tilde{S}_r = \text{Real}\left[S_r e^{j\omega t}\right]\ . \tag{C40}$$

If the surface forces are constant in a circular area:

$$P_z(a) = \begin{cases} 1\ , & a \leqslant a_1 \\ 0\ , & a > a_1 \end{cases}\ ,$$

$$P_r(a) = \begin{cases} 1\ , & a \leqslant a_1 \\ 0\ , & a > a_1 \end{cases}\ ,$$

then the first term of Eq. (C37) becomes

$$S_{zz} = \frac{1}{\mu}\int_0^\infty \frac{\alpha_c}{\Delta}\Big[(\kappa_s^{\,2}-2\alpha^2)\,\exp(-\alpha_c z) + 2\alpha^2\,\exp(-\alpha_s z)\Big]J_0(\alpha r)\,d\alpha\int_0^{a_1}\alpha a J_0(\alpha a)\,da\ .$$

$$\int_0^{a_1}\alpha a J_0(\alpha a)\,da = \frac{1}{\alpha}\int_0^{a_1}\alpha a J_0(\alpha a)\,d(\alpha a)$$

$$= \frac{1}{\alpha}\int_0^{\alpha a_1} p J_0(p)\,dp$$

$$= \frac{1}{\alpha}\Big[p J_1(p)\Big]_0^{\alpha a_1}$$

$$= \frac{1}{\alpha}\Big[\alpha a_1 J_1(\alpha a_1)\Big]\ .$$

Therefore,

$$S_{zz} = \frac{1}{\mu}\int_0^\infty \frac{\alpha_c}{\Delta}\left[(\kappa_s^2 - 2\alpha^2)\ \exp(-\alpha_c z) + 2\alpha^2\ \exp(-\alpha_s z)\right] J_0(\alpha r)\frac{1}{\alpha}\alpha a_1 J_1(\alpha a_1)\ d\alpha$$

$$= \frac{a_1}{\mu}\int_0^\infty \frac{\sqrt{\alpha^2 - \kappa_c^2}}{(2\alpha^2 - \kappa_s^2)^2 - 4\alpha^2\sqrt{\alpha^2 - \kappa_c^2}\ \sqrt{\alpha^2 - \kappa_s^2}}\left[(\kappa_s^2 - 2\alpha^2)\ \exp(-\sqrt{\alpha^2 - \kappa_c^2}z)\right.$$

$$\left. + 2\alpha^2\ \exp(-\sqrt{\alpha^2 - \kappa_s^2}z)\right] J_0(\alpha r)J_1(\alpha a_1)\ d\alpha\ . \tag{C41}$$

Similarly, the second term of Eq. (C37) and the first and second terms of Eq. (C38) become

$$S_{zr} = \frac{a_1}{\mu}\int_0^\infty \frac{\alpha}{(2\alpha^2 - \kappa_s^2)^2 - 4\alpha^2\sqrt{\alpha^2 - \kappa_c^2}\ \sqrt{\alpha^2 - \kappa_s^2}}\left[2\sqrt{\alpha^2 - \kappa_c^2}\ \sqrt{\alpha^2 - \kappa_s^2}\ \exp(-\sqrt{\alpha^2 - \kappa_c^2}z)\right.$$

$$\left. + (\kappa_s^2 - 2\alpha^2)\ \exp(-\sqrt{\alpha^2 - \kappa_s^2}z)\right] J_0(\alpha r)\ \frac{I(\alpha a_1)}{\alpha a_1}\ d\alpha\ . \tag{C42}$$

$$S_{rz} = \frac{a_1}{\mu}\int_0^\infty \frac{\alpha}{(2\alpha^2 - \kappa_s^2) - 4\alpha^2\sqrt{\alpha^2 - \kappa_c^2}\ \sqrt{\alpha^2 - \kappa_s^2}}\left[(\kappa_s^2 - 2\alpha^2)\ \exp(-\sqrt{\alpha^2 - \kappa_c^2}z)\right.$$

$$\left. + 2\sqrt{\alpha^2 - \kappa_c^2}\ \sqrt{\alpha^2 - \kappa_s^2}\ \exp(-\sqrt{\alpha^2 - \kappa_s^2}z)\right] J_1(\alpha r)J_1(\alpha a_1)\ d\alpha\ . \tag{C43}$$

$$S_{rr} = \frac{a_1}{\mu}\int_0^\infty \frac{\sqrt{\alpha^2 - \kappa_s^2}}{(2\alpha^2 - \kappa_s^2)^2 - 4\alpha^2\sqrt{\alpha^2 - \kappa_c^2}\ \sqrt{\alpha^2 - \kappa_s^2}}\left[2\alpha^2\ \exp(-\sqrt{\alpha^2 - \kappa_c^2}z)\right.$$

$$\left. + (\kappa_s^2 - 2\alpha^2)\ \exp(-\sqrt{\alpha^2 - \kappa_s^2}z)\right] J_1(\alpha r)\ \frac{I(\alpha a_1)}{\alpha a_1}\ d\alpha\ . \tag{C44}$$

where

$$I(\alpha a_1) = \int_0^{\alpha a_1} pJ_1(p)\ dp\ .$$

Equations (C41) and (C43) are the same ones derived by Miller and Pursey.[4]

---

[4]F. Miller and H. Pursey, "The Field and Radiation Impedance of Mechanical Radiators on the Free Surface of a Semi-infinite Isotropic Solid," *Proc. Roy. Soc. London Ser. A* 223: 521–41 (1954).

An average displacement within a circle is obtained by integrating Eq. (C37) with respect to r:

$$
\begin{aligned}
u_{z(av)} &= \frac{1}{\pi a^2}\int_0^a 2\pi r u_z\, dr = \int_0^a \frac{2}{a^2}\, r u_z\, dr \\
&= \int_0^a \frac{2}{a^2}\, r\, dr \Bigg\{ \frac{1}{\mu}\int_0^\infty \frac{\sqrt{\alpha^2-\kappa_c^2}}{(2\alpha^2-\kappa_s^2)^2 - 4\alpha^2\sqrt{\alpha^2-\kappa_c^2}\,\sqrt{\alpha^2-\kappa_s^2}} \Big[(\kappa_s^2 - 2\alpha^2)\exp(-\sqrt{\alpha^2-\kappa_c^2}z) \\
&\quad + 2\alpha^2 \exp(-\sqrt{\alpha^2-\kappa_s^2}z)\Big] J_0(\alpha r)\, d\alpha \int_0^\infty P_z(a)\alpha a J_0(\alpha a)\, da \\
&\quad + \frac{1}{\mu}\int_0^\infty \frac{\alpha}{(2\alpha^2-\kappa_s^2)^2 - 4\alpha^2\sqrt{\alpha^2-\kappa_c^2}\,\sqrt{\alpha^2-\kappa_s^2}} \Big[2\sqrt{\alpha^2-\kappa_c^2}\,\sqrt{\alpha^2-\kappa_s^2}\exp(-\sqrt{\alpha^2-\kappa_c^2}z) \\
&\quad + (\kappa_s^2 - 2\alpha^2)\exp(-\sqrt{\alpha^2-\kappa_s^2}z)\Big] J_0(\alpha r)\, d\alpha \int_0^\infty P_r(a)\alpha a J_1(\alpha a)\, da \Bigg\} \\
&= \frac{1}{\mu}\int_0^\infty \frac{\sqrt{\alpha^2-\kappa_c^2}}{(2\alpha^2-\kappa_s^2)^2 - 4\alpha^2\sqrt{\alpha^2-\kappa_c^2}\,\sqrt{\alpha^2-\kappa_s^2}} \Big[(\kappa_s^2 - 2\alpha^2)\exp(-\sqrt{\alpha^2-\kappa_c^2}z) \\
&\quad + 2\alpha^2 \exp(-\sqrt{\alpha^2-\kappa_s^2}z)\Big] \frac{2}{a^2}\int_0^a r J_0(\alpha r)\, dr\, d\alpha \int_0^\infty P_z(a)\alpha a J_0(\alpha a)\, da \\
&\quad + \frac{1}{\mu}\int_0^\infty \frac{\alpha}{(2\alpha^2-\kappa_s^2)^2 - 4\alpha^2\sqrt{\alpha^2-\kappa_c^2}\,\sqrt{\alpha^2-\kappa_s^2}} \Big[2\sqrt{\alpha^2-\kappa_c^2}\,\sqrt{\alpha^2-\kappa_s^2}\exp(-\sqrt{\alpha^2-\kappa_c^2}z) \\
&\quad + (\kappa_s^2 - 2\alpha^2)\exp(-\sqrt{\alpha^2-\kappa_s^2}z)\Big] \frac{2}{a^2}\int_0^a r J_0(\alpha r)\, dr\, d\alpha \int_0^\infty P_r(a)\alpha a J_1(\alpha a)\, da \\
&= \frac{1}{\mu}\int_0^\infty \frac{\sqrt{\alpha^2-\kappa_c^2}}{(2\alpha^2-\kappa_s^2)^2 - 4\alpha^2\sqrt{\alpha^2-\kappa_c^2}\,\sqrt{\alpha^2-\kappa_s^2}} \Big[(\kappa_s^2 - 2\alpha^2)\exp(-\sqrt{\alpha^2-\kappa_c^2}z) \\
&\quad + 2\alpha^2 \exp(-\sqrt{\alpha^2-\kappa_s^2}z)\Big] \frac{2J_1(\alpha a)}{\alpha a}\, d\alpha \int_0^\infty P_z(a)\alpha a J_0(\alpha a)\, da \\
&\quad + \frac{1}{\mu}\int_0^\infty \frac{\alpha}{(2\alpha^2-\kappa_s^2)^2 - 4\alpha^2\sqrt{\alpha^2-\kappa_c^2}\,\sqrt{\alpha^2-\kappa_s^2}} \Big[2\sqrt{\alpha^2-\kappa_c^2}\,\sqrt{\alpha^2-\kappa_s^2}\exp(-\sqrt{\alpha^2-\kappa_c^2}z) \\
&\quad + (\kappa_s^2 - 2\alpha^2)\exp(-\sqrt{\alpha^2-\kappa_s^2}z)\Big] \frac{2J_1(\alpha a)}{\alpha a}\, d\alpha \int_0^\infty P_r(a)\alpha a J_1(\alpha a)\, da\,. \qquad \text{(C45)}
\end{aligned}
$$

Nonsinusoidal Surface Force

Equations (C37) and (C38) represent displacements exerted by time-harmonic surface forces. If a nonsinusoidal current flows in a coil, we may represent it as a Fourier series of pure sinusoidal currents:

$$I(t) = \frac{a_0}{2} + \sum_{m=1}^{\infty} (a_m \cos m\omega_1 t + b_m \sin m\omega_1 t) ,$$

where

$$a_m = \frac{\omega_1}{\pi} \int_{-T/2}^{T/2} I(t) \cos m\omega_1 t \, dt \qquad (m = 0,1,2...) ,$$

$$b_m = \frac{\omega_1}{\pi} \int_{-T/2}^{T/2} I(t) \sin m\omega_1 t \, dt \qquad (m = 1,2,3...) ,$$

$\omega_1 = \frac{2\pi}{T}$, and T = the period of repetition.

Assuming $I(t)$ is the repetition of single harmonic train:

$$I(t) = \begin{cases} \cos \omega_0 t & |t - nT| \leqslant T_0 \\ 0 & |t - nT| > T_0 \end{cases} ,$$

we have

$$a_0 = 0$$

$$a_m = C(\omega)$$

$$\equiv C(m\omega_1)$$

$$= \left(\frac{\omega_1}{\pi} T_0\right) \left[\frac{\sin(\omega_0 + m\omega_1)T_0}{(\omega_0 + m\omega_1)T_0} + \frac{\sin(\omega_0 - m\omega_1)T_0}{(\omega_0 - m\omega_1)T_0}\right]$$

$$b_m = 0 .$$

Therefore,

$$
\begin{aligned}
I(t) &= \sum_{m=1}^{\infty} C(\omega) \cos \omega t \\
&\equiv \sum_{m=1}^{\infty} C(m\omega_1) \cos m\omega_1 t \\
&= \sum_{m=1}^{\infty} \frac{\omega_1 T_0}{\pi} \left[\frac{\sin(\omega_0 + m\omega_1)T_0}{(\omega_0 + m\omega_1)T_0} + \frac{\sin(\omega_0 - m\omega_1)T_0}{(\omega_0 - m\omega_1)T_0} \right] .
\end{aligned}
$$

Substituting $I(t)$ for I_ω of Eq. (11) and following through the subsequent operations, we have

$$
\tilde{S}_z \text{ (by pulse current)} = \text{Real} \left[\sum_{m=1}^{\infty} C(m\omega_1) S_z(m\omega_1) e^{jm\omega_1 t} \right] ; \tag{C46}
$$

$$
\tilde{S}_r \text{ (by pulse current)} = \text{Real} \left[\sum_{m=1}^{\infty} C(m\omega_1) S_r(m\omega_1) e^{jm\omega_1 t} \right] ; \tag{C47}
$$

$$
\begin{aligned}
&\tilde{S}_z \text{ (average displacement by pulse current)} \\
&\quad = \text{Real} \left[\sum_{m=1}^{\infty} C(m\omega_1) S_{z(\text{av})}(m\omega_1) e^{jm\omega_1 t} \right] .
\end{aligned} \tag{C48}
$$

APPENDIX D

Fortran Program for Calculation of Elastic Wave

Fortran Program for Calculation of Elastic Wave

```
.TYPE ELSTWV.F4
00100          COMMON X
01000          COMPLEX DISPZZ,DISPZR,DISPRZ,DISPRR,DISPZ,DISPR
01050         1        ,DISPZM,DISPRM
01100         1        ,B1,BP,DELTA,EXPB1,EXPBP,CRZZ,CRZR,CRRZ,CRRR
01200         1        ,COEZ,COER,EXPOMG
01550         1    ,DPZZ,DPZR,DPRZ,DPRR
01650         1 ,CRZZL,CRZZS,CRZRL,CRZRS,CRRZL,CRRZS,CRRRL,CRRRS
01655         1 ,VZZL,VZZS,VZRL,VZRS,VRZL,VRZS,VRRL,VRRS
01660         1 ,AVZZL,AVZZS,AVZRL,AVZRS,AVRZL,AVRZS,AVRRL,AVRRS
02000          REAL JOALPR,J1ALPR,J1ALA2,J1ALA1,J1IDA2,J1IDA1,JOAKR
02100         1     ,J1AKR,J1AKA2,JIDAK2,J1AKA1,JIDAK1
02200         1     ,JOAKRD,J1AKRD,J1A2D,J1A1D,J1AK12,J1A12D
02250         1     ,JOAKA1,JOAKA2
20000          COMPLEX A(2),ETAA1,ETA1,EXPETA,W,JK1K2,JK3K4
20050         1        ,PZ1(15),PR1(15)
20100          DIMENSION ZZF(2),AODZ(2),AODR(2)
20110         1    ,AF(18),AZ(50),AN(49)
20160          COMPLEX TSTZZS
20310          DATA(AF(III),III=1,18)/
20311         1    10.3E-3,12.E-3,13.5E-3,15.5E-3,14*1.E-3/
20340          DATA(PZ1(III),III=1,15)/
20341         1    (-0.5E6,0.),(-0.63E6,0.),(-0.65E6,0.),12*(1.,0.)/
20345          DATA(PR1(III),III=1,15)/
20346         1    (0.1E6,0.),(0.,0.),(-0.25E6,0.),12*(1.,0.)/
20350          DATA(AZ(III),III=1,50)/      /
20351         1    10*1.,2.0929368,2.2669368,2.2686720,2.4426720
20352         1    ,7.4426720,27.4426720,107.4426720,33*1./
20360          DATA(AN(III),III=1,49)/
20361         1    10*1.
20362         1    ,174.,3.,174.,1000.,4000.,16000.,33*1./
22175          PI=3.1415926
22180          FREQ=1.6E6
22200          OMEGA=2.*PI*FREQ
29200          J13579=1
29300          J97531=91
29302          AVZZL=(0.,0.)
29304          AVZZS=(0.,0.)
29306          AVZRL=(0.,0.)
29308          AVZRS=(0.,0.)
29320          AVRZL=(0.,0.)
29330          AVRZS=(0.,0.)
29340          AVRRL=(0.,0.)
29350          AVRRS=(0.,0.)
29360          TYPE 66492,J97531
29370    66492 FORMAT(I)
```

```
29375          DØ 111 III=1,3
40000          ZDIS=0.E-3
40100          RDIS=58.2676E-3
40200          AKØN=2.2678044
40300          A2=AF(III+1)
40400          A1=AF(III)
40500          SMALLD=AKØN-2.2669368
40510          VZZL=(0.,0.)
40520          VZZS=(0.,0.)
40530          VZRL=(0.,0.)
40540          VZRS=(0.,0.)
40600          VRZL=(0.,0.)
40700          VRZS=(0.,0.)
40800          VRRL=(0.,0.)
40900          VRRS=(0.,0.)
41000          RØ=7.85*((100.**3)/1000.)
41100          CS=2690.
41200          CC=5630.
41300          RMU=RØ*CS**2
41400          PS=ØMEGA/CS
41500          PC=ØMEGA/CC
41600          P=PS/PC
41700          ZDIS=ZDIS*PC
41800          RDIS=RDIS*PC
41900          A2=A2*PC
42000          A1=A1*PC
42002          CØEZ=PZ1(III)/(RMU*PC)
42004          CØER=-PR1(III)/(RMU*PC)
42055    33447 CØNTINUE
42059          DAABB=2.*PI/((RDIS+A2)*50.)
42063          IF(DAABB-0.003) 88298,88298,30108
42067    30108 DAABB=0.003
42071    88298 CØNTINUE
42074          DØ 14102 NPS=11,16
42075          DICM=(AZ(NPS+1)-AZ(NPS))/AN(NPS)
42076          IF(DICM-DAABB) 56473,56473,11144
42077    56473 AN(NPS)=AN(NPS)
42078          GØ TØ 14102
42090    11144 NNPPSS=INT((AZ(NPS+1)-AZ(NPS))/DAABB)
42095          AN(NPS)=FLØAT(NNPPSS)
42100    14102 CØNTINUE
```

```
42125          QDAABB=1.
42130          PDAABB=1.
42150          DAA1=QDAABB*DAABB
42175          DAA2=DAA1/2.
42200          DBB1=PDAABB*DAABB
42210          DBB2=DBB1/2.
42212          JFK=1
42214          IJK=1
42216          JKL=1
42218          IFL=1
42220          GGG=.5
42222          IHI=11
42225          DO 10011 I11=1,10000000
42275    67587 GO TO (39582,93582),IFL
42300    39582 GO TO (3927,3928),JFK
42325     3927 GO TO (98,79),JKL
42350       98 IF(ZDIS) 1398,8875,1398
42375     8875 ALPHA=1.+DAA2
42400          GO TO 79
42425     1398 ALP2=SQRT(1.-((2.*PI/ZDIS)*(FLOAT(I11-1)/50.))**2)
42450          ALP1=SQRT(1.-((2.*PI/ZDIS)*(FLOAT(I11 ) /50.))**2)
42475          DALP21=ALP2-ALP1
42500          IF(DALP21-DAA1) 3776,3776,3876
42525     3776 ALPHA=(ALP2+ALP1)/2.
42550          DALPHA=DALP21
42575          GO TO 3412
42600     3876 ALPHA=ALP2-DAA2
42625          DALPHA=DAA1
42650          JKL=2
42675          GO TO 3412
42700       79 ALPHA=ALPHA-DAA1
42725          JKL=2
42750          IF(ALPHA-DAA2) 986,986,572
42775      572 DALPHA=DAA1
42800          GO TO 3412
42825      986 ALPHA=(ALPHA+DAA2)/2.
42850          DALPHA=2.*ALPHA
42860          JFK=2
42875          M=I11+2
42900          GO TO 3412
```

```
42925     3928 GO TO (9382,33444),IJK
42950     9382 IF(ZDIS) 3289,9692,3289
42975     9692 ALPHA=P+DBB2
43000          GO TO 33444
43025     3289 ALP2=SQRT(P**2-((2.*PI/ZDIS)*(FLOAT(I11-M+1)/50.))**2)
43050          ALP1=SQRT(P**2-((2.*PI/ZDIS)*(FLOAT(I11-M+2)/50.))**2)
43075          DALP21=ALP2-ALP1
43100          IF(DALP21-DBB1) 26593,26593,39562
43125    26593 ALPHA=(ALP2+ALP1)/2.
43150          DALPHA=DALP21
43175          GO TO 87484
43200    39562 ALPHA=ALP2-DBB2
43225          DALPHA=DBB1
43250          IJK=2
43275          GO TO 87484
43300    33444 ALPHA=ALPHA-DBB1
43325          IJK=2
43350          IF(ALPHA-1.-DBB2) 7974,7974,418
43375      418 DALPHA=DBB1
43400          GO TO 87484
43425     7974 ALPHA=(ALPHA+DBB2+1.)/2.
43450          DALPHA=2.*(ALPHA-1.)
43475          IFL=2
43480          MMNN =I11+2
43500          GO TO 87484
43550    93582 CONTINUE
43555          DALPHA=(AZ(IHI+1)-AZ(IHI))/AN(IHI)
43560          ALPHA=AZ(IHI)+DALPHA*GGG+DALPHA*FLOAT(I11-MMNN+1)
43570          IF(ALPHA-16.) 31059,31059,3810
43590    31059 IF(ALPHA-AZ(IHI+1)) 32154,93933,93933
43600    93933 IHI=IHI+1
43650          MMNN=I11+2
43700          GO TO 10011
43750    32154 IF(ALPHA-(AKON-SMALLD)) 12345,55333,55333
43800    55333 IF(ALPHA-(AKON+SMALLD)) 10011,10011,12345
```

```
 3412 B11=SQRT(1.-ALPHA**2)
      B1=CMPLX(0.,B11)
      BPP=SQRT(P**2-ALPHA**2)
      BP=CMPLX(0.,BPP)
      GO TO 54321
87484 B11=SQRT(ALPHA**2-1.)
      B1=CMPLX(B11,0.)
      BPP=SQRT(P**2-ALPHA**2)
      BP=CMPLX(0.,BPP)
      GO TO 54321
12345 B11=SQRT(ALPHA**2-1.)
      B1=CMPLX(B11,0.)
      BPP=SQRT(ALPHA**2-P**2)
      BP=CMPLX(BPP,0.)
      GO TO 54321
54321 D1=2.*ALPHA**2-P**2
      DELTA=D1**2-4.*ALPHA**2*BP*B1
      EXPB1=CEXP(-B1*ZDIS)
      EXPBP=CEXP(-BP*ZDIS)
      ALPHA2=ALPHA**2
      CRZZS=2.*ALPHA2*EXPBP
      CRZZL=-D1*EXPB1
      CRZRS=-D1*EXPBP
      CRZRL=2.*B1*BP*EXPB1
      CRRZS=2.*B1*BP*EXPBP
      CRRZL=-D1*EXPB1
      CRRRS=-D1*EXPBP/ALPHA
      CRRRL=2.*ALPHA*EXPB1
      X=ALPHA*RDIS
      CALL BESEL0(P11)
      J0ALPR=P11
      CALL BESEL1(P12)
      J1ALPR=P12
      X=ALPHA*A2
      CALL BESEL1(P13)
      J1ALA2=P13
      CALL BESLID(P14)
      J1IDA2=P14
      X=ALPHA*A1
      CALL BESEL1(P15)
      J1ALA1=P15
      CALL BESLID(P16)
      J1IDA1=P16
```

```
47710   48392 CØNTINUE
47718         TSTZZS=
47720        1   B1*CRZZS*JOALPR*(A2*J1ALA2-A1*J1ALA1)*DALPHA/DELTA
47722         VZZS=VZZS+TSTZZS
47730         VZRS=VZRS+
47740        1   1.*CRZRS*JOALPR*(J1IDA2-J1IDA1)*DALPHA/DELTA
47750         VRZS=VRZS+
47760        1   ALPHA*CRRZS*J1ALPR*(A2*J1ALA2-A1*J1ALA1)*DALPHA/DELTA
47770         VRRS=VRRS+
47780        1   BP*CRRRS*J1ALPR*(J1IDA2-J1IDA1)*DALPHA/DELTA
47800         VZZL=VZZL+
47900        1   B1*CRZZL*JOALPR*(A2*J1ALA2-A1*J1ALA1)*DALPHA/DELTA
48000         VZRL=VZRL+
48100        1   1.*CRZRL*JOALPR*(J1IDA2-J1IDA1)*DALPHA/DELTA
48200         VRZL=VRZL+
48300        1   ALPHA*CRRZL*J1ALPR*(A2*J1ALA2-A1*J1ALA1)*DALPHA/DELTA
48400         VRRL=VRRL+
48500        1   BP*CRRRL*J1ALPR*(J1IDA2-J1IDA1)*DALPHA/DELTA
48553
48600   10011 CØNTINUE
48625
48650    3810 CØNTINUE
48700         AQ=2.*AKØN**2-P**2
48800         BQ=SQRT(AKØN**2-1.)
48900         CQ=SQRT(AKØN**2-P**2)
49000         AQDSH=4.*AKØN
49100         BQDSH=AKØN/BQ
49200         CQDSH=AKØN/CQ
49300         AQDDSH=4.
49400         BQDDSH=(BQ-BQDSH*AKØN)/BQ**2
49500         CQDDSH=(CQ-CQDSH*AKØN)/CQ**2
49600         EXPBQ=EXP(-BQ*ZDIS)
49700         EXPCQ=EXP(-CQ*ZDIS)
49720         EQS=2.*AKØN**2*EXPCQ
49740         EQL=-AQ*EXPBQ
49760         FQS=-AQ*EXPCQ
49780         FQL=2.*BQ*CQ*EXPBQ
49800         GQS=2.*BQ*CQ*EXPCQ
49900         GQL=-AQ*EXPBQ
50000         HQS=-AQ*EXPCQ/AKØN
50100         HQL=2.*AKØN*EXPBQ
50200         EQLD=(-AQDSH+AQ*BQDSH*ZDIS)*EXPBQ
50300         EQSD=(4.*AKØN-2.*AKØN**2*CQDSH*ZDIS)*EXPCQ
50400         FQLD=(2.*BQDSH*CQ+2.*BQ*CQDSH-2.*BQ*CQ*BQDSH*ZDIS)*EXPBQ
50500         FQSD=(-AQDSH+AQ*CQDSH*ZDIS)*EXPCQ
50600         GQLD=(-AQDSH+AQ*BQDSH*ZDIS)*EXPBQ
50700         GQSD=(2.*BQDSH*CQ+2.*BQ*CQDSH-2.*BQ*CQ*CQDSH*ZDIS)*EXPCQ
50800         HQLD=(2.-2.*AKØN*BQDSH*ZDIS)*EXPBQ
50900         HQSD=(-AQDSH+AQ*CQDSH*ZDIS+AQ/AKØN)*(EXPCQ/AKØN)
51000         DLTD=2.*AQ*AQDSH-4.*AKØN**2*(BQDSH*CQ+BQ*CQDSH)
51100        1     -8.*AKØN*BQ*CQ
51200         DLTDD=2.*AQDSH**2+2.*AQ*AQDDSH
51300        1      -16.*AKØN*(BQDSH*CQ+BQ*CQDSH)
51400        1      -4.*AKØN**2*(BQDDSH*CQ+BQ*CQDDSH)
51500        1      -8.*AKØN**2*BQDSH*CQDSH
51600        1      -8.*BQ*CQ
```

```
53816          SG1DL=BQDSH*EQL*J0AKR*(A2*J1AKA2-A1*J1AKA1)
53818         1      +BQ*EQLD*J0AKR*(A2*J1AKA2-A1*J1AKA1)
53820         1      +BQ*EQL*J0AKRD*(A2*J1AKA2-A1*J1AKA1)
53822         1      +BQ*EQL*J0AKR*(A2*J1A2D-A1*J1A1D)
53824          SG2DL=FQLD*J0AKR*J1AK12
53826         1      +FQL*J0AKRD*J1AK12
53828         1      +FQL*J0AKR*J1A12D
53830          SG3DL=1.   *GQL*J1AKR*(A2*J1AKA2-A1*J1AKA1)
53832         1      +AKØN*GQLD*J1AKR*(A2*J1AKA2-A1*J1AKA1)
53834         1      +AKØN*GQL*J1AKRD*(A2*J1AKA2-A1*J1AKA1)
53836         1      +AKØN*GQL*J1AKR*(A2*J1A2D-A1*J1A1D)
53838          SG4DL=CQDSH*HQL*J1AKR*J1AK12
53840         1      +CQ*HQLD*J1AKR*J1AK12
53842         1      +CQ*HQL*J1AKRD*J1AK12
53844         1      +CQ*HQL*J1AKR*J1A12D
53846          SG1DS=BQDSH*EQS*J0AKR*(A2*J1AKA2-A1*J1AKA1)
53848         1      +BQ*EQSD*J0AKR*(A2*J1AKA2-A1*J1AKA1)
53850         1      +BQ*EQS*J0AKRD*(A2*J1AKA2-A1*J1AKA1)
53852         1      +BQ*EQS*J0AKR*(A2*J1A2D-A1*J1A1D)
53854          SG2DS=FQSD*J0AKR*J1AK12
53856         1       +FQS*J0AKRD*J1AK12
53858         1      +FQS*J0AKR*J1A12D
53860          SG3DS=1.   *GQS*J1AKR*(A2*J1AKA2-A1*J1AKA1)
53862         1      +AKØN*GQSD*J1AKR*(A2*J1AKA2-A1*J1AKA1)
53864         1      +AKØN*GQS*J1AKRD*(A2*J1AKA2-A1*J1AKA1)
53866         1      +AKØN*GQS*J1AKR*(A2*J1A2D-A1*J1A1D)
54100          SG4DS=CQDSH*HQS*J1AKR*J1AK12
54200         1      +CQ*HQSD*J1AKR*J1AK12
54300         1      +CQ*HQS*J1AKRD*J1AK12
54301         1      +CQ*HQS*J1AKR*J1A12D
54302          G1DL=(SG1DL*DLTD-SG1L*DLTDD/2.)/DLTD**2
54400          G2DL=(SG2DL*DLTD-SG2L*DLTDD/2.)/DLTD**2
54401          G3DL=(SG3DL*DLTD-SG3L*DLTDD/2.)/DLTD**2
54402          G4DL=(SG4DL*DLTD-SG4L*DLTDD/2.)/DLTD**2
54500          G1DS=(SG1DS*DLTD-SG1S*DLTDD/2.)/DLTD**2
54600          G2DS=(SG2DS*DLTD-SG2S*DLTDD/2.)/DLTD**2
54601          G3DS=(SG3DS*DLTD-SG3S*DLTDD/2.)/DLTD**2
54602          G4DS=(SG4DS*DLTD-SG4S*DLTDD/2.)/DLTD**2
54700          VZZL=VZZL+2.*SMALLD*G1DL
54701          VZZS=VZZS+2.*SMALLD*G1DS
54702          VZRL=VZRL+2.*SMALLD*G2DL
54703          VZRS=VZRS+2.*SMALLD*G2DS
54800          VRZL=VRZL+2.*SMALLD*G3DL
54848          VRZS=VRZS+2.*SMALLD*G3DS
54850          VRRL=VRRL+2.*SMALLD*G4DL
54852          VRRS=VRRS+2.*SMALLD*G4DS
54854
```

```
51700          X=AKØN*RDIS
51800          CALL BESEL0(P111)
51900          J0AKR=P111
52000          CALL BESEL1(P112)
52100          J1AKR=P112
52200          X=AKØN*A2
52300          CALL BESEL1(P113)
52400          J1AKA2=P113
52500          CALL BESLID(P114)
52600          JIDAK2=P114
52650          CALL BESEL0(P117)
52651          J0AKA2=P117
52700          X=AKØN*A1
52800          CALL BESEL1(P115)
52900          J1AKA1=P115
53000          CALL BESLID(P116)
53100          JIDAK1=P116
53150          CALL BESEL0(P118)
53151          J0AKA1=P118
53200          J0AKRD=-RDIS*J1AKR
53300          J1AKRD=-J1AKR/AKØN+RDIS*J0AKR
53400          J1A2D=-J1AKA2/AKØN+A2*J0AKA2
53500          J1A1D=-J1AKA1/AKØN+A1*J0AKA1
53510      834 CØNTINUE
53600          J1AK12=JIDAK2-JIDAK1
53700          J1A12D=AKØN*(A2**2*J1AKA2-A1**2*J1AKA1)
53705          GØ TØ 29384
53710          J0AKR=2.*J1AKR/(AKØN*RDIS)
53720          J0AKRD=2.*AKØN*(-2.*J1AKR/(AKØN*RDIS)**2
53721         1      +J0AKR/(AKØN*RDIS))
53750    29384 CØNTINUE
53800          SG1L=BQ*EQL*J0AKR*(A2*J1AKA2-A1*J1AKA1)
53802          SG2L=FQL*J0AKR*J1AK12
53804          SG3L=AKØN*GQL*J1AKR*(A2*J1AKA2-A1*J1AKA1)
53806          SG4L=CQ*HQL*J1AKR*J1AK12
53808          SG1S=BQ*EQS*J0AKR*(A2*J1AKA2-A1*J1AKA1)
53810          SG2S=FQS*J0AKR*J1AK12
53812          SG3S=AKØN*GQS*J1AKR*(A2*J1AKA2-A1*J1AKA1)
53814          SG4S=CQ*HQS*J1AKR*J1AK12
```

```
54856          VZZL=VZZL-PI*(0.,1.)*(SG1L/DLTD)
54858          VZZS=VZZS-PI*(0.,1.)*(SG1S/DLTD)
54860          VZRL=VZRL-PI*(0.,1.)*(SG2L/DLTD)
54862          VZRS=VZRS-PI*(0.,1.)*(SG2S/DLTD)
54864          VRZL=VRZL-PI*(0.,1.)*(SG3L/DLTD)
54866          VRZS=VRZS-PI*(0.,1.)*(SG3S/DLTD)
54868          VRRL=VRRL-PI*(0.,1.)*(SG4L/DLTD)
54900          VRRS=VRRS-PI*(0.,1.)*(SG4S/DLTD)
55150    14129 CØNTINUE
55175    29129 CØNTINUE
55200          VZZL=CØEZ*VZZL
55300          VZZS=CØEZ*VZZS
55400          VZRL=CØER*VZRL
55500          VZRS=CØER*VZRS
55600          VRZL=CØEZ*VRZL
55650          VRZS=CØEZ*VRZS
55700
55800          VRRL=CØER*VRRL
55900          VRRS=CØER*VRRS
55902          AVZZL=AVZZL+VZZL
55904          AVZZS=AVZZS+VZZS
55906          AVZRL=AVZRL+VZRL
55908          AVZRS=AVZRS+VZRS
55910          AVRZL=AVRZL+VRZL
55912          AVRZS=AVRZS+VRZS
55914          AVRRL=AVRRL+VRRL
55916          AVRRS=AVRRS+VRRS
55920      111 CØNTINUE
55940          DPZZ=AVZZL+AVZZS
55960          DPZR=AVZRL+AVZRS
55980          DPRZ=AVRZL+AVRZS
55982          DPRR=AVRRL+AVRRS
55984          DISPZ=DPZZ+DPZR
55986          DISPR=DPRZ+DPRR
55988          DISPZM=-DPZZ+DPZR
56000          DISPRM=-DPRZ+DPRR
```

```
56010     149 AVZZLA=CABS(AVZZL)
56012         IF(AVZZLA) 150,151,150
56014     150 AVZZLP=AIMAG(AVZZL)/REAL(AVZZL)
56016         AVZZLP=ATAN(AVZZLP)
56018     151 AVZZSA=CABS(AVZZS)
56020         IF(AVZZSA) 152,153,152
56022     152 AVZZSP=AIMAG(AVZZS)/REAL(AVZZS)
56024         AVZZSP=ATAN(AVZZSP)
56026     153 AVZRLA=CABS(AVZRL)
56028         IF(AVZRLA) 154,155,154
56030     154 AVZRLP=AIMAG(AVZRL)/REAL(AVZRL)
56032         AVZRLP=ATAN(AVZRLP)
56034     155 AVZRSA=CABS(AVZRS)
56036         IF(AVZRSA) 156,157,156
56038     156 AVZRSP=AIMAG(AVZRS)/REAL(AVZRS)
56040         AVZRSP=ATAN(AVZRSP)
56042     157 AVRZLA=CABS(AVRZL)
56044         IF(AVRZLA) 158,159,158
56046     158 AVRZLP=AIMAG(AVRZL)/REAL(AVRZL)
56048         AVRZLP=ATAN(AVRZLP)
56050     159 AVRZSA=CABS(AVRZS)
56052         IF(AVRZSA) 160,161,160
56054     160 AVRZSP=AIMAG(AVRZS)/REAL(AVRZS)
56056         AVRZSP=ATAN(AVRZSP)
56058     161 AVRRLA=CABS(AVRRL)
56060         IF(AVRRLA) 162,163,162
56062     162 AVRRLP=AIMAG(AVRRL)/REAL(AVRRL)
56064         AVRRLP=ATAN(AVRRLP)
56066     163 AVRRSA=CABS(AVRRS)
56068         IF(AVRRSA) 164,165,164
56070     164 AVRRSP=AIMAG(AVRRS)/REAL(AVRRS)
56072         AVRRSP=ATAN(AVRRSP)
56134     165 DSPZMA=CABS(DISPZM)
56136         IF(DSPZMA) 166,167,166
56138     166 DSPZMP=AIMAG(DISPZM)/REAL(DISPZM)
56140         DSPZMP=ATAN(DSPZMP)
56142     167 DSPRMA=CABS(DISPRM)
56144         IF(DSPRMA) 168,169,168
```

```
56146      168 DSPRMP=AIMAG(DISPRM)/REAL(DISPRM)
56148          DSPRMP=ATAN(DSPRMP)
56150      169 DPZZA=CABS(DPZZ)
56152          IF(DPZZA) 170,171,170
56154      170 DPZZP=AIMAG(DPZZ)/REAL(DPZZ)
56156          DPZZP=ATAN(DPZZP)
56158      171 DPZRA=CABS(DPZR)
56160          IF(DPZRA) 172,173,172
56162      172 DPZRP=AIMAG(DPZR)/REAL(DPZR)
56164          DPZRP=ATAN(DPZRP)
56166      173 DPRZA=CABS(DPRZ)
56168          IF(DPRZA) 174,175,174
56170      174 DPRZP=AIMAG(DPRZ)/REAL(DPRZ)
56172          DPRZP=ATAN(DPRZP)
56174      175 DPRRA=CABS(DPRR)
56176          IF (DPRRA) 176,177,176
56178      176 DPRRP=AIMAG(DPRR)/REAL(DPRR)
56180          DPRRP=ATAN(DPRRP)
56200      177 DISPZA=CABS(DISPZ)
56251          IF(DISPZA) 178,179,178
56252      178 DISPZP=AIMAG(DISPZ)/REAL(DISPZ)
56253          DISPZP=ATAN(DISPZP)
56254      179 DISPRA=CABS(DISPR)
56255          IF(DISPRA) 781,782,781
56260      781 DISPRP=AIMAG(DISPR)/REAL(DISPR)
56262          DISPRP=ATAN(DISPRP)
56268      782 CØNTINUE
56270          TYPE 5963,AVZZLA,AVZZLP,AVZZSA,AVZZSP
56280          TYPE 5963,AVZRLA,AVZRLP,AVZRSA,AVZRSP
56300          TYPE 5963,AVRZLA,AVRZLP,AVRZSA,AVRZSP
56301          TYPE 5963,AVRRLA,AVRRLP,AVRRSA,AVRRSP
56302      791 TYPE 5963,DPZZA,DPZZP,DPZRA,DPZRP
56303          TYPE 5963,DPRZA,DPRZP,DPRRA,DPRRP
56304          TYPE 5963,DISPZA,DISPZP,DISPRA,DISPRP
56305          TYPE 5963,DSPZMA,DSPZMP,DSPRMA,DSPRMP
57675    97531 CØNTINUE
57680    13579 CØNTINUE
57700    87111 CØNTINUE
58075     5963 FØRMAT(4E)
58100          END
58946
```

```
      SUBRØUTINE BESEL0(ZZZZ)
      CØMMØN X
      IF(X-3.) 101,101,102
  101 XX=(X/3.)**2
      ZZZZ=1.   -2.2499997  *XX+1.2656208  *XX**2
     1          -0.3163866  *XX**3+0.0444479  *XX**4
     1          -0.0039444  *XX**5+0.00021  *XX**6
      GØ TØ 103
  102 XX=3./X
      F0=0.79788456  -0.00000077  *XX-0.00552740  *XX**2
     1               -0.00009512  *XX**3+0.00137237  *XX**4
     1               -0.00072805  *XX**5+0.00014476  *XX**6
      TETA0=X-0.78539816
     1      -0.04166397  *XX   -0.00003954  *XX**2
     1      +0.00262573  *XX**3-0.00054125  *XX**4
     1      -0.00029333  *XX**5+0.00013558  *XX**6
      ZZZZ=(1.  / SQRT(X))*F0* CØS(TETA0)
  103 RETURN
      END
      SUBRØUTINE BESEL1(ZZZ)
      CØMMØN X
      Y=X
      IF(Y-3.) 201,201,202
  201 YY=(Y/3.)**2
      ZZZ=Y*(0.5  -0.56249985  *YY+0.21093573  *YY**2
     1            -0.03954289  *YY**3+0.00443319  *YY**4
     1            -0.00031761  *YY**5+0.00001109  *YY**6)
      GØ TØ 204
  202 YY=3./Y
      F1=0.79788456  +0.00000156  *YY+0.01659667  *YY**2
     1               +0.00017105  *YY**3-0.00249511  *YY**4
     1               +0.00113653  *YY**5-0.00020033  *YY**6
      TETA1=Y-2.35619449
     1       +0.12499612  *YY+0.00005650  *YY**2
     1      -0.00637879  *YY**3+0.00074348  *YY**4
     1      +0.00079824  *YY**5-0.00029166  *YY**6
      ZZZ=(1.  / SQRT(Y))*F1* CØS(TETA1)
  204 RETURN
      END
      SUBRØUTINE BESLID(BS)
      CØMMØN X
      IF(X-5.) 138,138,139
  138 IS=INT(2.*X)+3
      AS=(1./6.)*X**3
      BS=AS
      DØ 5000 KK=1,IS
      AS=-0.25*AS*X*X*(2.*FLØAT(KK-1)+3.)
     1  /(FLØAT(KK)*(FLØAT(KK)+1.)*(2.*FLØAT(KK)+3.))
      BS=BS+AS
 5000 CØNTINUE
      GØ TØ 193
  139 Q1=(((-188.1357/X+109.1142)/X-23.79333)/X+2.050931)/X
      G1=((Q1-0.1730503)/X+0.7034845)/X-0.064109E-3
      Q2=(((-5.817517/X+2.105874)/X-0.6896196)/X+0.4952024)/X
      Q2=(Q2-0.187344E-2)/X+0.7979095
      BS=1. -SQRT(X)*(Q2*CØS(X-PI/4. )-Q1*SIN(X-PI/4. ))
  193 RETURN
      END
```

ORNL-5065
UC-25 — Materials

INTERNAL DISTRIBUTION

1–3. Central Research Library
4. Document Reference Section
5. Laboratory Records, ORNL RC
6. ORNL Patent Office
7. G. M. Adamson, Jr.
8. C. R. Brinkman
9. D. A. Canonico
10. K. V. Cook
11. F. L. Culler
12. J. E. Cunningham
13. J. H. DeVan
14. C. V. Dodd
15. G. G. Fee
16. B. E. Foster
17. W. O. Harms
18. R. F. Hibbs
19–21. M. R. Hill
22–41. K. Kawashima
42. A. L. Lotts
43. W. R. Martin
44. W. McClain
45–64. R. W. McClung
65. H. E. McCoy
66. J. R. McGuffey
67. C. J. McHargue
68. P. Patriarca
69. S. Peterson
70. H. Postma
71. M. W. Rosenthal
72. J. L. Scott
73. W. A. Simpson, Jr.
74. G. M. Slaughter
75. J. H. Smith
76. S. D. Snyder
77. D. B. Trauger
78. T. N. Washburn
79. J. R. Weir, Jr.
80. G. D. Whitman
81. John Moteff (consultant)
82. Hayne Palmour III (consultant)
83. J. W. Prados (consultant)
84. G. V. Smith (consultant)
85. D. F. Stein (consultant)

EXTERNAL DISTRIBUTION

86. ARGONNE NATIONAL LABORATORY, 9700 South Cass Avenue, Argonne, IL 60439

K. J. Reimann

87. GENERAL ELECTRIC COMPANY, 175 Curtner Avenue, San Jose, CA 95125

R. A. Day

88. HANFORD ENGINEERING DEVELOPMENT LABORATORY, P.O. Box 1970, Richland, WA 99352

J. C. Spanner

89. SANDIA CORPORATION, P.O. Box 5800, Albuquerque, NM 87115

D. W. Ballard

90–91. UNIVERSITY OF TENNESSEE, Department of Physics and Astronomy, Knoxville, TN 37916

L. Adler
W. E. Deeds

92. USERDA, DIVISION OF CONTROLLED THERMONUCLEAR RESEARCH, Washington, DC 20545

K. M. Zwilsky

93–96. USERDA, DIVISION OF REACTOR RESEARCH AND DEVELOPMENT, Washington, DC 20545

C. W. Cunningham
R. Hahn
E. E. Hoffman
K. E. Horton

97–98. USERDA, OAK RIDGE OPERATIONS, P.O. Box E, Oak Ridge, TN 37830

Director, Reactor Division
Research and Technical Support Division

99. USERDA, TECHNICAL INFORMATION CENTER, Office of Information Services, P.O. Box 62, Oak Ridge, TN 37830

100–293. For distribution as shown in TID-4500 Distribution Category, UC-25 — Materials.

☆ U.S. GOVERNMENT PRINTING OFFICE: 1975-748-189/189