OAK RIDGE NATIONAL LABORATORY LIBRARIES

3 4456 0550572 6

CENTRAL RESEARCH LIBRARY

ORNL-TM-4747

Cy 82

An Overview of HTGR Fuel Recycle

K. J. Notz

[redacted]

OAK RIDGE NATIONAL LABORATORY
CENTRAL RESEARCH LIBRARY
DOCUMENT COLLECTION
LIBRARY LOAN COPY
DO NOT TRANSFER TO ANOTHER PERSON
If you wish someone else to see this
document, send in name with document
and the library will arrange a loan.

UCN-7969
(3 3-67)

OAK RIDGE NATIONAL LABORATORY
OPERATED BY UNION CARBIDE CORPORATION • FOR THE U.S. ATOMIC ENERGY COMMISSION

Printed in the United States of America. Available from
National Technical Information Service
U.S. Department of Commerce
5285 Port Royal Road, Springfield, Virginia 22161
Price: Printed Copy $5.50; Microfiche $2.25

This report was prepared as an account of work sponsored by the United States Government. Neither the United States nor the Energy Research and Development Administration, nor any of their employees, nor any of their contractors, subcontractors, or their employees, makes any warranty, express or implied, or assumes any legal liability or responsibility for the accuracy, completeness or usefulness of any information, apparatus, product or process disclosed, or represents that its use would not infringe privately owned rights.

ORNL-TM-4747
UC-77 — Gas-Cooled Reactor Technology

Contract No. W-7405-eng-26

CHEMICAL TECHNOLOGY DIVISION

AN OVERVIEW OF HTGR FUEL RECYCLE

K. J. Notz

JANUARY 1976

OAK RIDGE NATIONAL LABORATORY
Oak Ridge, Tennessee 37830
operated by
UNION CARBIDE CORPORATION
for the
ENERGY RESEARCH AND DEVELOPMENT ADMINISTRATION

OAK RIDGE NATIONAL LABORATORY LIBRARIES

3 4456 0550572 6

CONTENTS

Page

Abstract 1
1. Introduction 1
2. General Aspects of Fuel Recycle. 6
3. Safety and Environmental Aspects 11
4. Shipping and Storage 12
5. Reprocessing 19
5.1. General Description 19
5.2. Crushing. 24
5.3. Burning 24
5.4. Particle Separation and Dissolution 29
5.5. Solvent Extraction. 30
5.6. Off-Gas Decontamination 34
6. Refabrication. 41
6.1. General Description 41
6.2. Fabrication of Fissile Kernels. 44
7. Waste Handling 45
8. Accountability and Safeguards. 51
9. References 52

AN OVERVIEW OF HTGR FUEL RECYCLE

K. J. Notz

ABSTRACT

An overview of HTGR fuel recycle is presented, with emphasis placed on reprocessing and fuel kernel refabrication. Overall recycle operations include (1) shipment and storage, (2) reprocessing, (3) refabrication, (4) waste handling, and (5) accountability and safeguards.

---

1. INTRODUCTION

This report presents an overview of High Temperature Gas-Cooled Reactor (HTGR) fuel recycle, with emphasis placed on reprocessing and on selected aspects of refabrication. The term "fuel recycle" incorporates those operations required to recover useful fuel values from irradiated or "burned-up" nuclear fuel and to return this recovered fuel to a reactor for further fissioning. The recycle operations are conveniently classified as (1) shipment and storage, (2) reprocessing, and (3) refabrication. An inherent part of reprocessing and refabrication is (4) waste handling and (5) accountability for fissionable material. The overriding factor in all phases of recycle is the relatively high radioactivity of the materials involved. The relevance of fuel recycle to the nuclear industry is becoming increasingly apparent, and it is of particular significance to HTGRs at this time. The monetary value of recovered fuel has always been recognized and, in fact, figures significantly in net costs for power from nuclear reactors.

In recent years, the rising prominence of environmental impact considerations has focused international attention on the need for spent

fuel reprocessing in order to convert the radioactive content to a form suitable for disposal in an acceptable manner. Simply storing the spent fuel *in toto* is not adequate, and there are at present no commercial reprocessing facilities in operation in this country. The NFS plant in West Valley, New York, is shut down for extensive remodeling, the GE midwest plant at Morris, Illinois, "cannot be made to operate effectively and has been mothballed pending further studies,"[1] and the Allied-Gulf Nuclear Services (AGNS) plant at Barnwell, South Carolina, is not yet in operation. If HTGRs are to take their place in the fission-energy power-supply scenario, fuel recycle must be available. It has been estimated that commercial HTGR recycle capability should be available in 1988, but this could probably be extended by several years. In any event, there is barely enough time to complete the necessary research and development, including pilot scale facilities, to permit design and construction of a commercial HTGR fuel recycle plant within this time frame. A recent energy evaluation panel ranked this project as the most important of a group of 10 projects being evaluated for government support.

The prime objective of the ERDA-funded Thorium Utilization Program is to carry out the development and demonstration of an HTGR fuel recycle technology that is capable of scaling up to an economically feasible and environmentally acceptable commercial plant. This effort is a part of the "National HTGR Fuel Recycle Development Program Plan,"[2] and it is being carried out under ERDA-supported programs at Oak Ridge National Laboratory, Idaho Chemical Processing Plant, and General Atomic Company. The work that has been performed to date indicates that there are no major breakthroughs required, although a great deal of development work still remains.[3-5] HTGR fuel reprocessing is also under development at KFA, Jülich, Germany.[6]

Various projections can be made of the number and kind of nuclear power plants that will exist in this country at future dates. In one of these projections,[7] it is estimated that there will be 10^6 MW(e) of total nuclear capacity in the year 2000, of which up to 44% will be from HTGRs; this corresponds to 400 HTGRs of 1100 MW(e) capacity. General Atomic Company currently has orders for four large reactors, with operation

scheduled to begin in the period 1981 to 1986 (see Table 1). As indicated in Table 1, there have been several cancellations of ordered reactors since last December. This resulted from the general slow-down affecting the nuclear power industry in general, plus the start-up delays on the Fort St. Vrain reactor (see Table 2). In spite of these current problems, it is not unreasonable to think in terms of a commercial recycle facility serving 50 reactors, which calls for a plant capacity of about one ton of heavy metal (uranium plus thorium) per day. This is a commercially viable size and is the nominal plant size used today as a basis for preliminary conceptual designs and generic environmental impact statements.[8]

Table 1. Large HTGRs ordered from General Atomic Company*

Utility		Net MW(e)	Scheduled operation
Philadelphia Electric Co.			
Fulton 1	Note: cancelled	1160	1984
Fulton 2	September 1975	1160	1986
Delmarva Power and Light Co.			
Summit 1	Note: cancelled	770	1981
Summit 2	October 1975	770	1984

*As of August 1975. Previous orders for four other reactors (two each by Southern California Edison of 770 MW and Louisiana Power and Light of 1160 MW) were cancelled and an option by Ohio Edison for two 1160 MW units was allowed to expire.

Presently, there are four existing HTGRs world-wide, two in the U.S.A., and one each in England and West Germany. Each has a distinctive fuel element, but all four utilize coated microspheres. The coatings may be BISO (porous pyrocarbon and dense pyrocarbon) or TRISO (porous carbon, dense carbon, and silicon carbide). These reactors and their fuels are described in Tables 2 and 3. In addition to these reactors, the Federal Republic of Germany, along with several privately owned German companies, is building a 300 MW(e) pebble-bed reactor of the AVR type, the Thorium High Temperature Reactor (THTR). This reactor will be at Schmehausen, and

although it was originally scheduled for operation in 1977, startup will be postponed because the construction start was delayed.

Table 2. American HTGRs

Peach Bottom

Location: 63 miles southwest of Philadelphia, Penna.

First went critical: March 3, 1966

Final shutdown: October 31, 1974

Power: 115 MW(th); 40 MW(e)

Number of elements: 804

Fuel description: The fuel elements are essentially cylinders 144-in. long and 3.5-in. diam. They are made up of a graphite sleeve, annular fuel compacts that contain pyrocarbon-coated thorium-uranium carbide kernels in a graphite matrix, a central graphite spine, and upper and lower graphite reflectors. Each element contains about 275 g of uranium and about 2100 g of thorium.

Fort St. Vrain

Location: Platteville, 30 miles north of Denver, Colo.

First went critical: January 1974

Maximum power to date: 2% of full power[a]

Power: 842 MW(th); 330 MW(e)

Number of elements: 1482

Fuel description: The standard fuel elements are right parallelopipeds of hexagonal cross section. They are 31.2 in. high and 14.2 in. from one side of the hexagon to the opposing one. There are 212 fuel holes, 6 "poison" holes, and 6 coolant holes all of 0.5-in.diam, and 102 coolant holes 0.625-in. diam, all of which run parallel to the long dimension of the elements. The fuel holes contain fuel kernels of separate fissile and fertile (U and Th) particles as the carbides and with TRISO coatings. The coated kernels are bonded together in a carbon matrix. Each element contains about 13 kg of thorium and 600 g of uranium.

---

[a] Various non-nuclear difficulties have prevented going to higher power levels. Delays have been caused by water leakage into the core, cracks in a pelton wheel, improper control rod drive seals, and rerouting of emergency control cables.

Table 3. Foreign HTGRs

Dragon

Location: Near Bournemouth, England

First went critical: Summer 1964

Power: 20 MW(th)

Number of elements: 37

Fuel description: Each fuel element consists of seven rods comprising almost solid graphite end pieces and a graphite tube in the core region. Annular fuel compacts are stacked around a central spine inside the graphite tube. The graphite tubes are hexagonal in outer section, held apart by ribs down the middle of each flat surface. The entire 7-rod cluster assembly is 100 in. long; individual fuel rods are just under 90 in. long. The annular fuel compacts contain carbides of thorium and uranium in the form of about 400-μ kernels with TRISO coatings. The coated spheres are held in a carbon matrix. On the average, each rod contains about 54 g of uranium and 162 g of thorium, although the thorium was concentrated in a small number of rods (about 70) for experimental purposes.

Arbeitgemeinschaftversuchsreaktor (AVR)

Location: Near Jülich, West Germany

First went critical: 1967

Power: 50 MW(th); 15.6 MW(e)

Number of elements: Approximately 100,000

Fuel description: The AVR is what is called a "pebble-bed" reactor. The "pebbles" are the fuel elements. They are graphite spheres of 6-cm diam which contain pyrocarbon-coated particles of the carbides of thorium and uranium. Each pebble contains uranium and thorium in the ratio of about 1 to 5, with the total weight of metal in each sphere being somewhere between 5 and 12 g.

2. GENERAL ASPECTS OF FUEL RECYCLE

The general flow of nuclear materials in HTGR fuel recycle is shown in Fig. 1. A new reactor is started up on ^{235}U "Initial Fuel" with added thorium for conversion to ^{233}U via neutron capture by the reactions:

$$^{232}Th + n^{o} \rightarrow {}^{233}Th \xrightarrow[22.1\ min]{\beta} {}^{233}Pa \xrightarrow[27.4\ d]{\beta} {}^{233}U \text{ (half-life = } 1.59 \times 10^{5} \text{ years).}$$

The ratio of thorium to ^{235}U is about 10, and the ^{235}U is contained in the "fissile" particles, while the thorium is present in the "fertile" particles. The fuel is used until about 90% of the ^{235}U is burned up. At this time (4 to 6 years, depending on the reactor), for each 100 units of ^{235}U initially loaded in, approximately 70 units of ^{233}U have been generated from the ^{232}Th and about half of this ^{233}U has already fissioned in situ. The remaining ^{233}U (equivalent to about 30% of the ^{235}U initially charged) is recovered in the reprocessing plant and refabricated into "23 Recycle Fuel."[a] The residual ^{235}U may be disposed of as waste, stored for future recovery, or reprocessed and refabricated into "25 Recycle Fuel," depending on the future economics of these alternatives. At present, one round of recycle is planned for the ^{235}U, to utilize the remaining 10%.

In reloading the reactor, the 23 Recycle Fuel must be supplemented with "Makeup Fuel" that may be identical to Initial Fuel. The Makeup Fuel could also be ^{233}U recovered from another reactor, or possibly even ^{239}Pu recovered from a light water reactor or from an LMFBR. While the use of plutonium would complicate fuel reprocessing and refabrication, it has been shown that recycle in HTGRs may well be the most optimum use for plutonium.[9]

The thorium recovered in reprocessing is radioactive because of the presence of ^{228}Th, which is formed by the alpha decay of ^{232}U (see next

---

[a]Called "23" from element No. 9<u>2</u> and mass No. 23<u>3</u>.

ORNL DWG. 75-15134

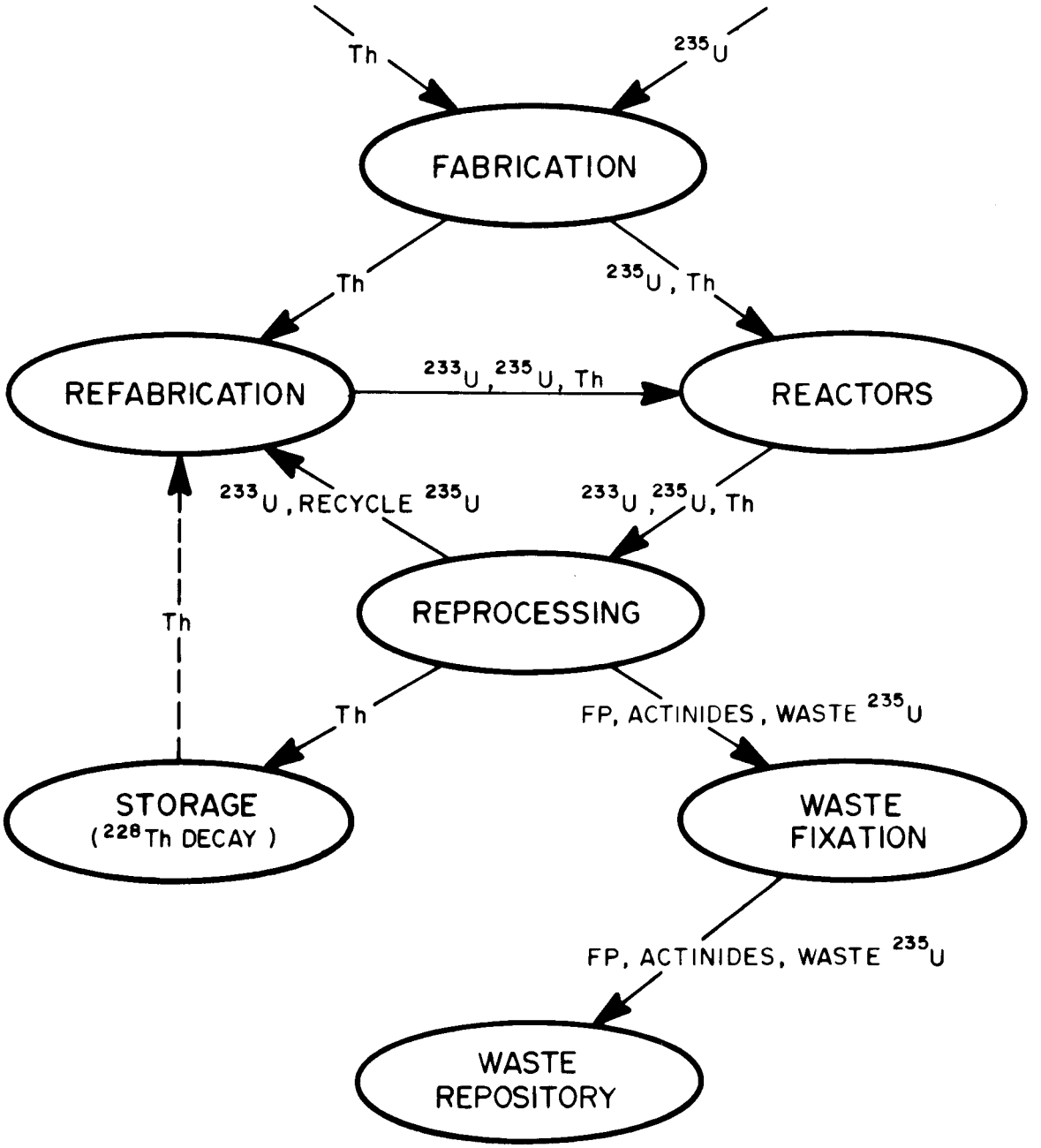

Fig. 1. HTGR fuel recycle.

paragraph for the origin of ^{232}U). Since the half-life of ^{228}Th is 1.9 years, storage for an extended period of time will permit this activity to decay out, so that the recovered thorium can then be reused in a "cold" or "contact" facility. It is estimated that ten half-lives will be required for the storage time, giving a decrease in activity by a factor of 10^3, to allow contact refabrication.

Note that the prime distinction between "fabrication" of fresh fuel and "refabrication" of recovered fuel is that the latter is done with radioactive (or "hot") materials and must, therefore, be performed "remotely" in a hot cell. The activity of the ^{233}U derives mainly from contained ^{232}U from which it is not, of course, chemically separable. The ^{232}U is generated by two reactions, one starting with ^{232}Th and the other with ^{230}Th. The ^{232}Th route occurs with neutrons having an energy in excess of 6.34 MeV (for HTGRs, the cross section of the first reaction is about 4 mb):

$$^{232}Th \xrightarrow[\sim 2.5\ b]{(n,\ 2n)} {}^{231}Th \xrightarrow[25.6\ h]{\beta} {}^{231}Pa \xrightarrow[212\ b]{(n,\gamma)} {}^{232}Pa \xrightarrow[1.3\ d]{\beta} {}^{232}U\ .$$

The ^{230}Th content of natural thorium is variable (in the 5 to 60 ppm range), depending on the origin of the ore. The reactions which lead to ^{232}U are:

$$^{230}Th + n^{o}\ (23\ b) \rightarrow {}^{231}Th \rightarrow \text{ same as above.}$$

Thus, the amount of ^{232}U present in the ^{233}U varies with the initial ^{230}Th content, burnup, and neutron spectrum, but is expected to be 250 to 400 ppm in fuel from the Fort St. Vrain reactor. With certain thorium ores it might approach 1000 ppm. The ^{232}U, which has a half-life of 74 years, decays through ^{228}Th and a series of short-lived intermediates to stable ^{208}Pb:

$$^{232}U \xrightarrow[74\ y]{\alpha} {}^{228}Th \xrightarrow[1.9\ y]{\alpha} {}^{224}Ra \xrightarrow[3.64\ d]{\alpha} {}^{220}Rn \xrightarrow[54.5\ s]{\alpha} {}^{216}Po \xrightarrow[0.16\ s]{\alpha} {}^{212}Pb$$

$$^{212}Pb \xrightarrow[10.6\ h]{\beta} {}^{212}Bi \xrightarrow{60\ m} \begin{cases} 64\%\ \beta(+\gamma)\ {}^{212}Po \xrightarrow[3 \times 10^{-7}\ s]{\alpha} \\ 36\%\ \alpha \rightarrow {}^{208}Tl \xrightarrow[3.1\ m]{\beta(2.6\ MeV\ \gamma)} \end{cases} \rightarrow {}^{208}Pb\ .$$

The most significant of these intermediates are ^{220}Rn which, being a gas, can be transported through filters, and ^{208}Tl and ^{212}Bi, which emit energetic gammas. It is these gammas that are the major source of radioactivity in ^{233}U. This activity can be greatly reduced for a reasonable time by breaking the decay chain by use of an ion exchange cleanup that removes thorium and radium.[10] The other daughters decay out within three days (giving a minimum activity), while the ^{228}Th grows back in. The activity is considerably decreased during the first 1 to 3 months. Secular equilibrium is attained in about ten years.

Although fission (582 b) is the major reaction that ^{235}U undergoes, it also reacts to yield ^{236}U, which in turn leads to further neutron capture (the cross sections are for the HTGR neutron spectrum):

$$^{235}U \xrightarrow[58\ b]{n,\ \gamma} {}^{236}U \xrightarrow[7\text{-}20\ b]{n,\ \gamma} {}^{237}U \xrightarrow[6.75\ d]{\beta} {}^{237}Np \xrightarrow[\text{reactions}]{\text{other}} \quad .$$

While the capture cross section of ^{236}U is relatively small, it becomes significant at high burnups of the ^{235}U in the fissile particles. After several cycles of a given initial charge of ^{235}U through the reactor, the ^{236}U content results in an economically unacceptable parasitic loss of neutrons; therefore, the uranium from particles containing ^{235}U should be recycled no more than twice. This is not true, however, of uranium from particles containing ^{233}U, which may be recycled repeatedly without incurring a significant cost penalty from parasitic loss of neutrons.

Consideration of the above points makes it clear why the separation of ^{235}U from ^{233}U particles is an important step in HTGR fuel reprocessing. If the particles are permitted to mix so that the uranium isotopes are mixed, there is no economical way to separate them again. Thus, the ^{233}U would become "contaminated" with ^{236}U, and incur the concomitant cost penalty. One method used to reduce the magnitude of the imposed fuel particle separation problem is to fabricate two kinds of fuel elements. The first kind contains only fuel particles of ^{235}U and thorium, while the second kind contains only fuel particles of ^{233}U and thorium. In this approach, the separation problem only exists for fuel elements of the first

kind. The ^{233}U produced by neutron captures in particles of thorium must be maintained separately from the burned-up ^{235}U particle only in the first kind of element.

The two major purposes of reactor fuel reprocessing are to recover and purify fuel values, and to convert the wastes to a form suitable for disposal. In commercial power producing reactors, the fuel has generally been in the reactor long enough for fission products and neutron capture products to have accumulated enough to significantly affect the economic optimization of fuel recycle. Thus, the high cost of fuel refabrication makes it imperative that fuel be left in the reactor as long as practical. In addition to neutron physics considerations, the state of the art in fuel fabrication limits fuel life to a maximum of 4 to 6 years. If fuel is left in a reactor until a significant number of fuel elements fail, the overall costs of the failures may easily become a controlling economic factor. Failures may range from such things as element warpage leading to sticking in the core, to outright loss of fuel integrity. This would lead to fission product release to the coolant circuit, with concomitant costly maintenance procedures or actual reactor shutdown, and the necessity for costly decontamination.

An important economic penalty is that associated with the reactor down-time required for refueling, or for moving fuel around in the core to produce a more uniform burnup among the individual elements. Even when a reactor is not operating, there is a continuing cost associated with fuel inventory and plant depreciation. For this reason, part of the fuel in a core may be irradiated beyond the point of optimum burnup with regard to buildup of fission products and neutron capture products, and results in a decrease in the number of times the reactor is shut down. This mode of operation leads to overall optimization of fuel cycle economics. It is these highly exposed fuel elements that are most likely to control fuel reprocessing operations, since they have the highest radiation levels, the most fission products, and the highest incidence of failure in ways important in reprocessing, such as fission product leakage and fuel element distortion. Current plans are to partially refuel HTGRs once a year, replacing one-fourth or one-sixth of the core each time for large commercial (~ 1000 MW) HTGRs or for the Fort St. Vrain reactor, respectively.

In general, reprocessing of solid fuels consists of: shipping irradiated fuel elements from the reactor to a reprocessing plant; storing for a total cooling time of about six months; removing as much extraneous material from the fuel as possible by a variety of means and dissolving the fuel in nitric acid; separating and purifying the uranium and thorium by solvent extraction; disposing of the radioactive wastes; and decontaminating the gaseous effluents from the reprocessing steps. Decontamination and disposal of radioactive effluents are important problems that occur during each of the chemical processing steps.

There has been considerable discussion and study of the importance of locations of the reactors and of the reprocessing plants. These important considerations center about the interrelations of the following: power transmission costs; irradiated fuel shipping costs and the probability of shipping accidents; and radioactive emissions, both from the reactors and from the reprocessing plants. The hazard from radioactive emissions is dependent on the relative locations of the population and the sources and types of the emissions. Recognition of this fact is contained in the recently adopted changes to Title 10, Chapter 1, Code of Federal Regulations, Part 50, which is the Federal law governing emissions from light water reactors and which, by implication, may also apply to reprocessing plants.

3. SAFETY AND ENVIRONMENTAL ASPECTS

As indicated earlier, the disposal of radioactive wastes from spent nuclear fuel may well be the controlling factor in fuel recycle. "Environmental impact" encompasses many factors, including not only the potential hazard from nuclear radiation, but also heat pollution, chemical pollution, aesthetic insult, and land use. Since this is a very large and important subject in itself, no effort will be made here to do more than draw attention to these problems.

If we restrict our discussion to fuel recycle, the heat rejected during power generation at the reactor itself can be excluded arbitrarily from the

discussion. This is by far the major source of "thermal pollutions," since 60% or more of the energy of fission in a nuclear power reactor is unclaimable as electrical energy and is lost as heat because of friction, equipment inefficiencies, and the inexorability of the second law of thermodynamics. Although there is some waste heat from fuel transport, fuel reprocessing, fuel fabrication, and waste disposal operations, these factors are not more or less significant as sources of localized thermal pollution than are thousands of other industrial operations. The same sort of thing may be said of chemical pollutants. While it is true that toxic chemicals such as nitric acid, hydrofluoric acid, carbon monoxide, and a variety of organic compounds are used in various parts of the fuel cycle, their amounts are relatively small, and the care taken in their use and disposal is at least as good as that taken with such materials in industry as a whole. In fact, it is probably better, since the likelihood of their contamination with radioactivity imposes stringent controls on their handling and disposal.

Thus, as regards fuel recycle, the key environmental problem is the handling and disposal of radioactive wastes. Figure 2 outlines the major operations that lead to the formation of wastes; it also indicates that, in addition to the decontamination of plant effluents, an acceptable means for ultimate disposal of the radioactive wastes that have been removed from product and effluents and concentrated in various forms must be available. The basic objectives underlying current attempts to solve the problem of radioactive wastes are to keep them completely contained and controlled during their handling, and to dispose of them in a manner precluding all possibility of their escape from a safe, central storage site.

4. SHIPPING AND STORAGE

In general, HTGR fuels will be stored ("cooled") for up to 6 months at the reactor before shipping them to the reprocessing plant. Figure 3 shows what the shipping cask may look like. Because of their long cooling times, the fuels pose no severe problems of fission product decay heat

ORNL DWG 73-8585

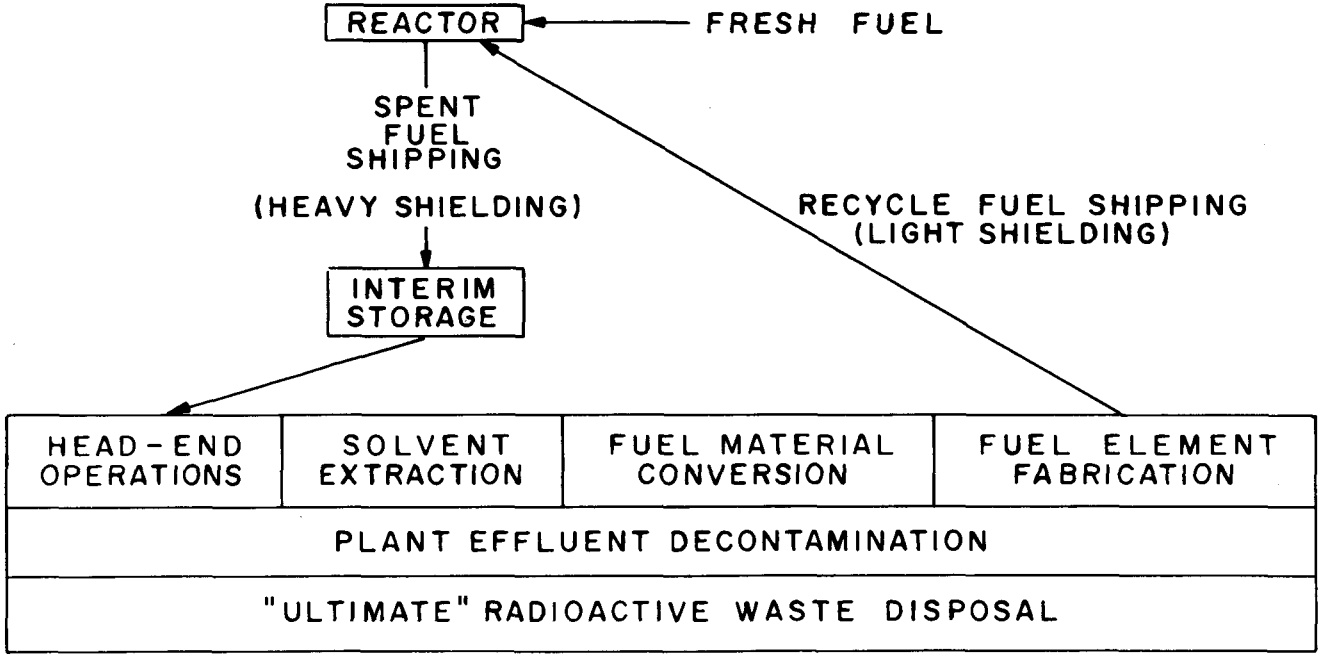

Fig. 2. Schematic representation of major reactor fuel recycle operations.

ORNL DWG. 71-9530

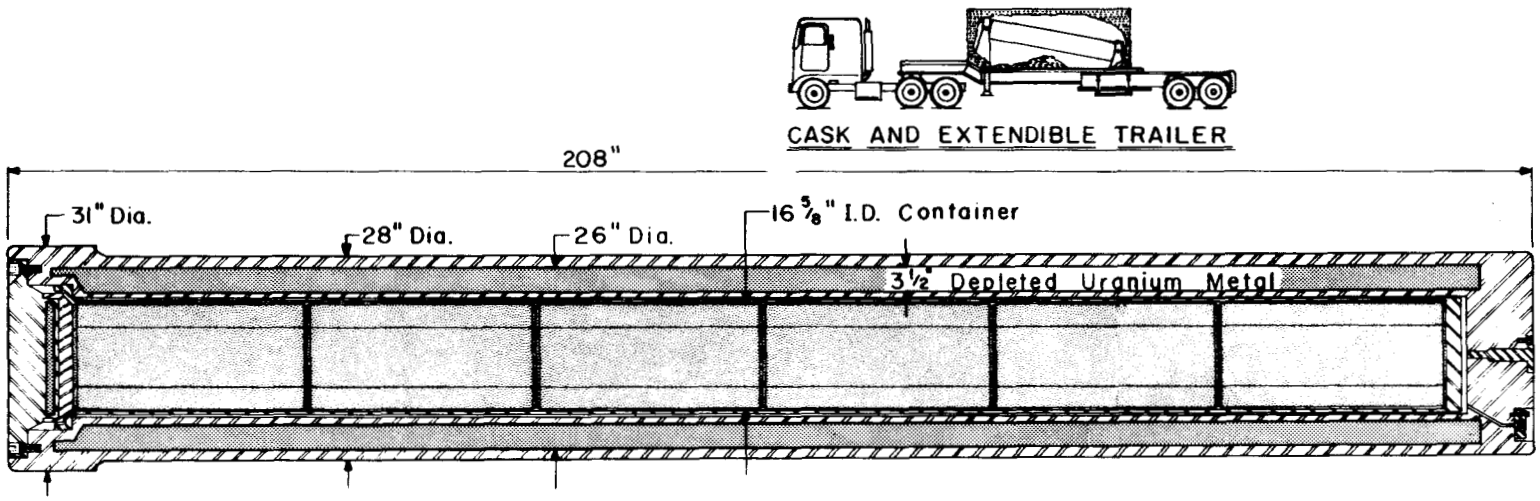

Fig. 3. Schematic representation of an HTGR spent fuel shipping cask.

removal during shipment (in sharp contrast to fast reactor fuels, where fission product decay heat removal is a major problem in shipping). Table 4 shows how total heat generation and radioactivity from some of the fission products which are important in fuel reprocessing change with time. It has been calculated that the shipping cask outer surface temperature will not exceed about 65°C for 100-day cooled, fully-irradiated Fort St. Vrain Reactor fuel.

Storage of spent fuel elements will be necessary at the reprocessing site for a number of reasons. A holdup capacity must be available since elements will arrive in groups from individual reactors, but a reprocessing plant must be able to operate on a more-or-less continuous basis. Furthermore, shipping containers are expensive and for economical reasons must be unloaded promptly to give a short turnaround time. Up to this point, the situation is comparable to the receipt of carloads of coal at a steam-generating power station, but here the analogy ends. The spent fuel must be stored in a shielded facility that can handle the low-level (but not inconsequential) heat load, has the capability of retaining the identity of individual fuel elements, and has the capacity to store certain types of elements (e.g., 25 Recycle blocks) until a campaign can be run. The identification of elements is important in terms of fuel type (Initial Fuel, 23 Recycle, etc.) and in terms of ownership, since, in the commercial case, several utilities will be shipping fuel to a given reprocessing plant.

Figures 4 and 5 show a plan view and section, respectively, of a proposed receiving and storage facility. A "small" facility of this type has been built at the Idaho Chemical Processing Plant. It will handle fuel from the Fort St. Vrain reactor that is intended for the planned reprocessing demonstration pilot plant at Idaho Falls. The storage vault has a capacity of about 2500 fuel elements. A commercial-scale facility might need a capacity of 20,000 elements, cover an area of one to two acres, and provide a heat dump capable of absorbing 4000 kW.

Table 4. Volatile fission product content and total decay heat of spent HTGR fuels.[a]

Decay Time (days)	Noble Gases (Ci/ton)	Iodine (Ci/ton)	Cesium (Ci/ton)	Total Decay Heat (kW/ton)
30	109,400	71,000	1,143,000	65.7
90	63,740	785	1,064,000	37.6
150	63,000	18	1,021,000	28.2
365	60,600	--	889,000	16.4
3,652	34,000	--	278,000	3.4

Ci of tritium/ton: 1,247 (could be quadrupled by 1 ppm Li impurity)

Ci of 14-Carbon/ton: 2.6 (could be tripled by 20 ppm N_2 impurity)

[a]These values are calculated for Fort St. Vrain Nuclear Generating Station fuel irradiated for 6 years. A decay time of about six months to a year is expected before reprocessing. The per ton basis is per ton of heavy metal; the ppm basis is total graphite (to convert to heavy metal basis, multiply the given ppm by ~ 10).

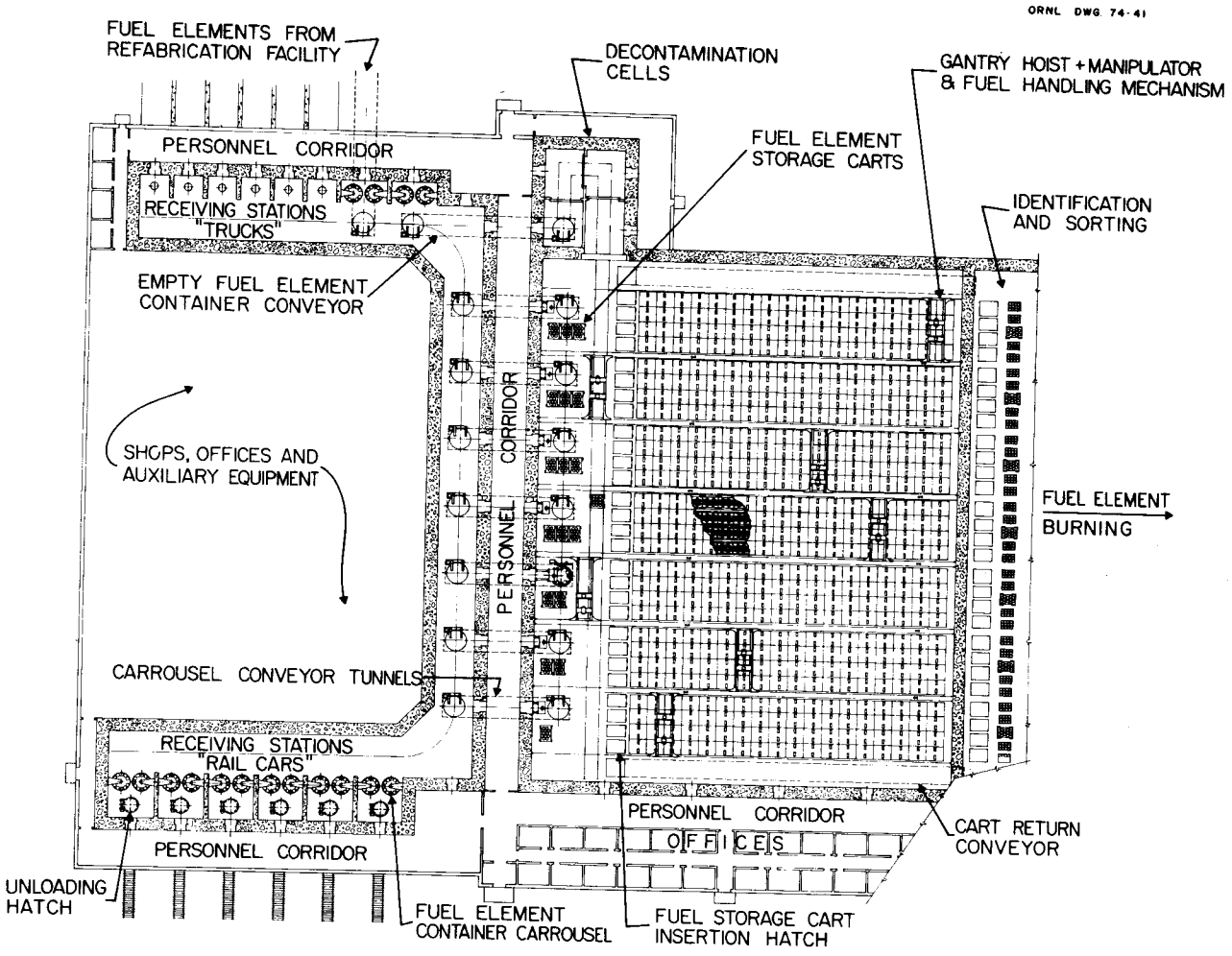

Fig. 4. HTGR fuel element receiving and storage concept.

ORNL DWG 73-10765

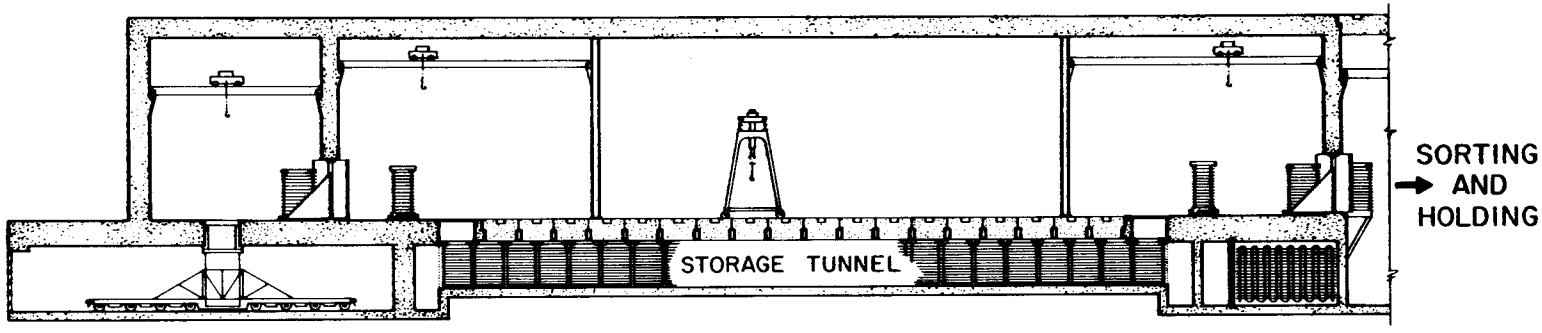

Fig. 5. Section through fuel element receiving and storage.

5. REPROCESSING

5.1. General Description

The feature that sets HTGR fuel apart from all other reactor fuels is the very large amount of carbon that is directly associated with the fertile and fissile materials. Thus, the weight ratio of carbon-to-thorium is about 225 in a fuel element of the Fort St. Vrain Nuclear Generating Station type. The basic problem in HTGR fuel reprocessing is removal of the carbon from the actual fuel material (i.e., uranium and thorium). Burning is the method used to remove this large amount of carbon from the relatively small amount of fuel material.

It is apparent from Tables 2 and 3 that HTGR fuels come in an extraordinary variety of forms and sizes. For our purposes, the discussion will be limited to the type of fuel in the Fort St. Vrain Reactor. It is very similar to the fuel that will be used in the large HTGRs to be built by the General Atomic Company (GAC) in the U.S., and is the type being used in the USERDA and GAC HTGR fuel recycle development program.[2]

A fuel element is shown in Fig. 6. In addition to this type of element, some of the elements contain three large longitudinal holes for the insertion of control rods. As indicated in Table 2, the Fort St. Vrain Reactor fuel elements have fuel holes that contain coated particles of fissile and fertile materials. These are the type 1 and type 2 particles shown in Fig. 7. The type 3 recycle particle, shown in Fig. 7, is no longer representative of the planned refabrication particle. The new "reference" recycle fissile particle (described in more detail in Table 6) contains no thorium, consists of low density ^{233}U oxide-carbide, and is TRISO coated. It is thus similar to the type 1 particle, except that the kernel is larger and of lower density. The recycle fertile particle is identical to the type 2 particle.

The differences between fertile and fissile particles, in terms of coating, size, and density, provide the basis by which they are

ORNL DWG 74-3701

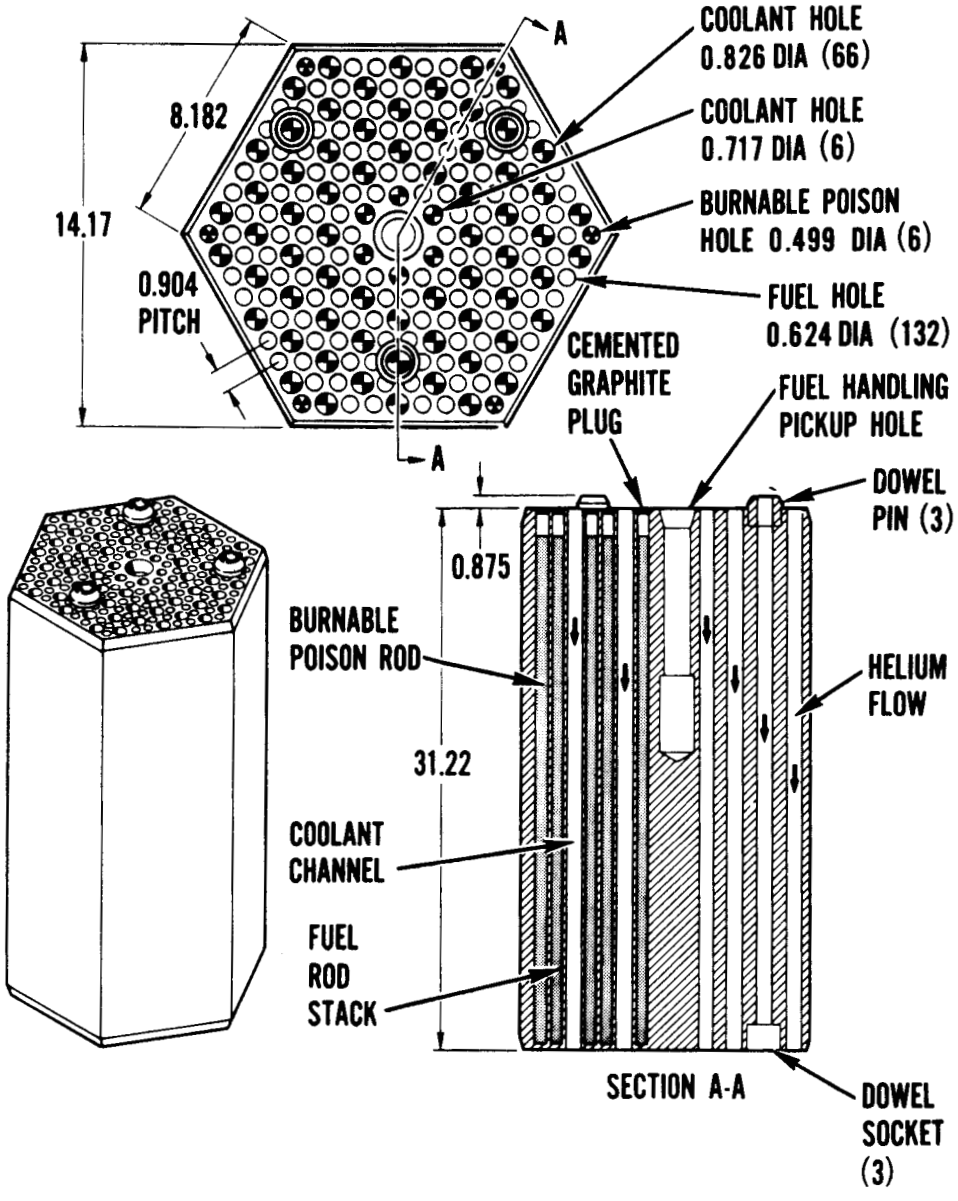

Fig. 6. Typical 1160-MW(e) modified fuel element.

ORNL DWG 73-8584

	FISSILE PARTICLE (TYPE 1)	FERTILE PARTICLE (TYPE 2)	RECYCLE PARTICLE (TYPE 3)
COMPOSITION	$^{235}UC_2$	ThO_2	$(Th,^{233}U)O_2$
Th:U RATIO	-	-	4.25
KERNEL DIAM. μm	200	500	400
COATING THICKNESS, μm			
BUFFER	85	85	90
INNER DENSE COATING	25	-	-
SILICON CARBIDE	25	-	-
OUTER DENSE COATING	35	75	80
TOTAL PARTICLE DIAM. μm	540	820	740

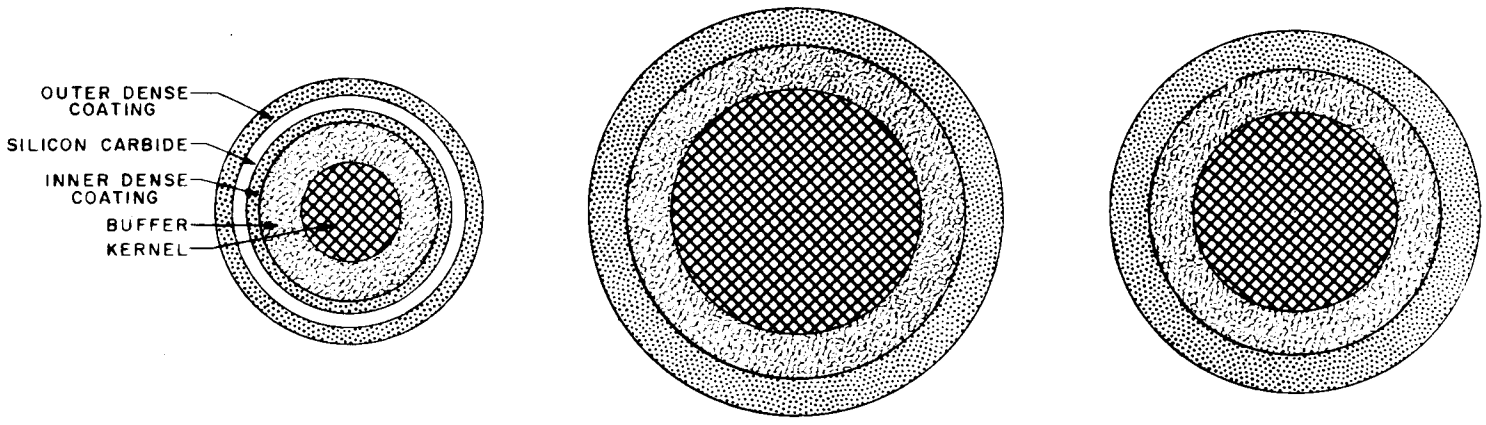

Fig. 7. Diagrammatic representation of fissile, fertile, and recycle particles for 1150 MW(e) HTGRS.

separated from each other during processing. The silicon-carbide coating on the fissile fuel particles serves two important functions: it prevents excessive fission product release from these highly burned up fuel particles during irradiation in the reactor, and it preserves the integrity of fuel particles during burning. It is, of course, important that the coatings not be broken prematurely, to avoid "crossover" in either direction. Crossover of ^{235}U (and its ^{236}U content) to ^{233}U devaluates the ^{233}U because of the added neutron poison. Crossover of ^{233}U to the ^{235}U stream (which is discarded after one recycle) represents loss of ^{233}U. To keep economic penalties acceptable, it has been estimated that no more than 15% crossover of the first kind, nor 5% of the second kind, is permissible. Obviously, some broken coatings will be present in the fuel as it is discharged from the reactor, but these are expected to be very small in number, representing only 0.01 to 0.001% of the total particles.

The Thorium Utilization Program is designed to give information as early as possible for the design and construction of commercial facilities to accomplish the recycle of Th-^{233}U. At this time the program is being redefined by ERDA, but it will contain three development elements: flowsheet (process) development, equipment development, and pilot-scale (hot) demonstration. In addition, a limited commercial recycle capability will also be provided by ERDA, capable of serving 5 to 20 large reactors. The recycle development program is being conducted at three sites: Allied Chemical Corporation (ACC) near Idaho Falls, Oak Ridge National Laboratory (ORNL), and General Atomic Company (GAC) in San Diego. The current overall division of work is as follows:

	Primary	Supporting
Reprocessing Development	GAC	ORNL, ACC
Reprocessing Pilot Plant	ACC	ORNL
Refabrication Development	ORNL	GAC
Refabrication Pilot Plant	ORNL	GAC
Irradiation Testing	ORNL	GAC
Evaluation and Studies	ORNL	GAC
Commercial Plant Design	GAC	ORNL

At this time, neither the site nor the prime contractor for the commercial capability have been selected. Also under consideration is an option in which the pilot plants and commercial plant will be combined. The

following descriptions are in terms of what has been done to date and what was planned per the above tabulation. Environmental impact statements have been prepared for the two pilot plants as originally planned, with the reprocessing pilot plant in Idaho[11] and the refabrication pilot plant in Oak Ridge.[12]

The fuel reprocessing operations envisioned in the pilot-scale facilities are a three-stage crushing system for size reduction of the full-size fuel elements, fluidized-bed burners for burning the graphite and pyrolytic carbon, off-gas treatment to remove radioactive ^{85}Kr, ^{129}I, ^{220}Rn, and ^{3}H and, finally, solvent extraction by a modified Thorex flowsheet. It is also necessary to separate the fissile particles from fertile particles and process these two streams separately, for reasons explained earlier.

The present status of the development is that a number of unit operations from reprocessing have been conducted "cold" at GAC. In general, this work has shown the feasibility of block-crushing, of primary fluidized-bed burning of graphite and outer coatings, and of secondary burning after breaking of TRISO silicon carbide coatings. Work at ORNL in small-scale hot cell facilities on irradiated fuels indicates the general feasibility of the envisioned flowsheet. Other work with the Krypton Absorption in Liquid CO_2 process (KALC) indicates that it is feasible to remove ^{85}Kr from the off-gas. The reprocessing pilot plant has been conceptually designed by ACC, which identified many open questions and development needs, and work is progressing on answering the remaining questions to satisfy the need for design information. The reprocessing pilot plant still requires the completion of design, construction, and operation. Analogous development is required for the refabrication technology. Data and information will be obtained on the following aspects of recycle technology in the program: (1) reliability of the processes and equipment used; (2) maintenance experience for the remote equipment; (3) radiation exposure to personnel; (4) nuclear materials safeguards and inventory techniques with ^{233}U; (5) capability of the systems for handling the plant effluents; and (6) confirmation of the irradiation performance of the ^{233}U-containing product.

Reprocessing consists of four major systems: head-end, solvent extraction, off-gas cleanup, and waste handling. Head-end operations include crushing, burning, particle separation, and dissolution. After particle separation, the fertile fraction is processed to recover the ^{233}U. These systems are described in more detail below.

5.2. Crushing

Crushing will be done in three stages, to reduce the fuel blocks to pieces less than 3/16 in. in size. A schematic view of this equipment is shown in Fig. 8. The size of the fuel blocks (30 in. by 14 in.) requires a rather massive piece of equipment for this operation. Recalling that initial and ^{235}U makeup fuels present the opportunity for undesirable crossover, it is important that coating breakage during crushing (and also during primary burning) be kept to a minimum. Tests to date indicate that only a few percent of the particle coatings are broken during crushing, which is acceptable. After burning and separation, TRISO particles are crushed (to break the silicon-carbide shell) in a small roll crusher.

5.3. Burning

Primary burning (so-called "exothermic") will be done in a fluidized bed, shown schematically in Fig. 9, and in conceptual commercial scale in Fig. 10. The burner diameter will be 16 to 24 in., and its development is one of the major engineering tasks in the program. Some of the problems that have been encountered include control during startup, formation of localized hot spots (which lead to burn-through of the furnace wall), recycle of the carbon fines which are generated during combustion, and the formation of clinkers. It is planned to operate the burner at 875°C and with a fluidizing velocity of about 2.5 fps.

An alternative burner concept is under consideration. This is a whole-block burner,[13,14] which precludes crushing and thus bypasses this bulky equipment and dusty operation. A conceptual plan view is shown in Fig. 11. In a burner of this type, the two major problems appear to be the attainment of high burning rates without excessive temperatures (which

ORNL DWG 73-10763RI

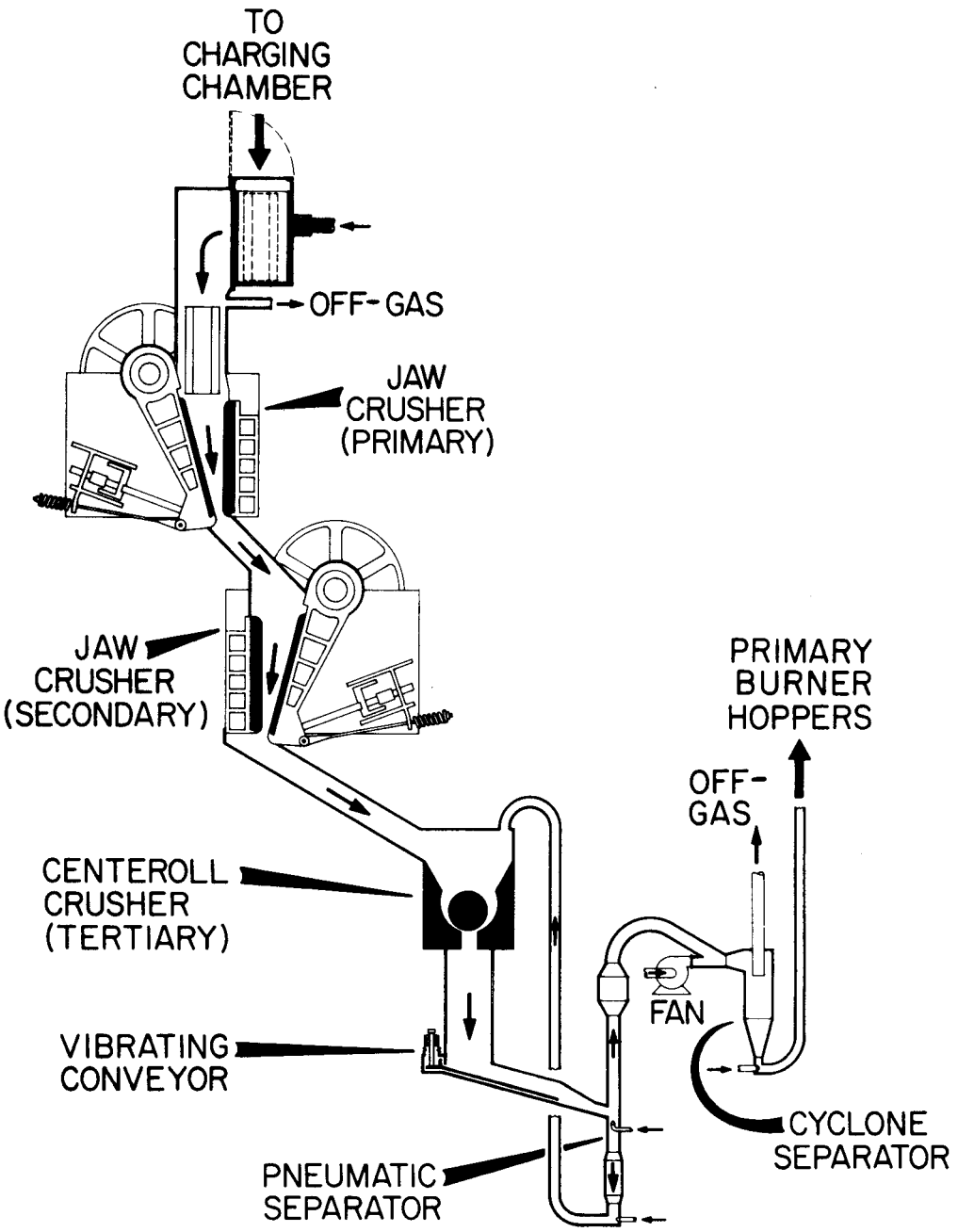

Fig. 8. Schematic diagram of major items of crushing system equipment.

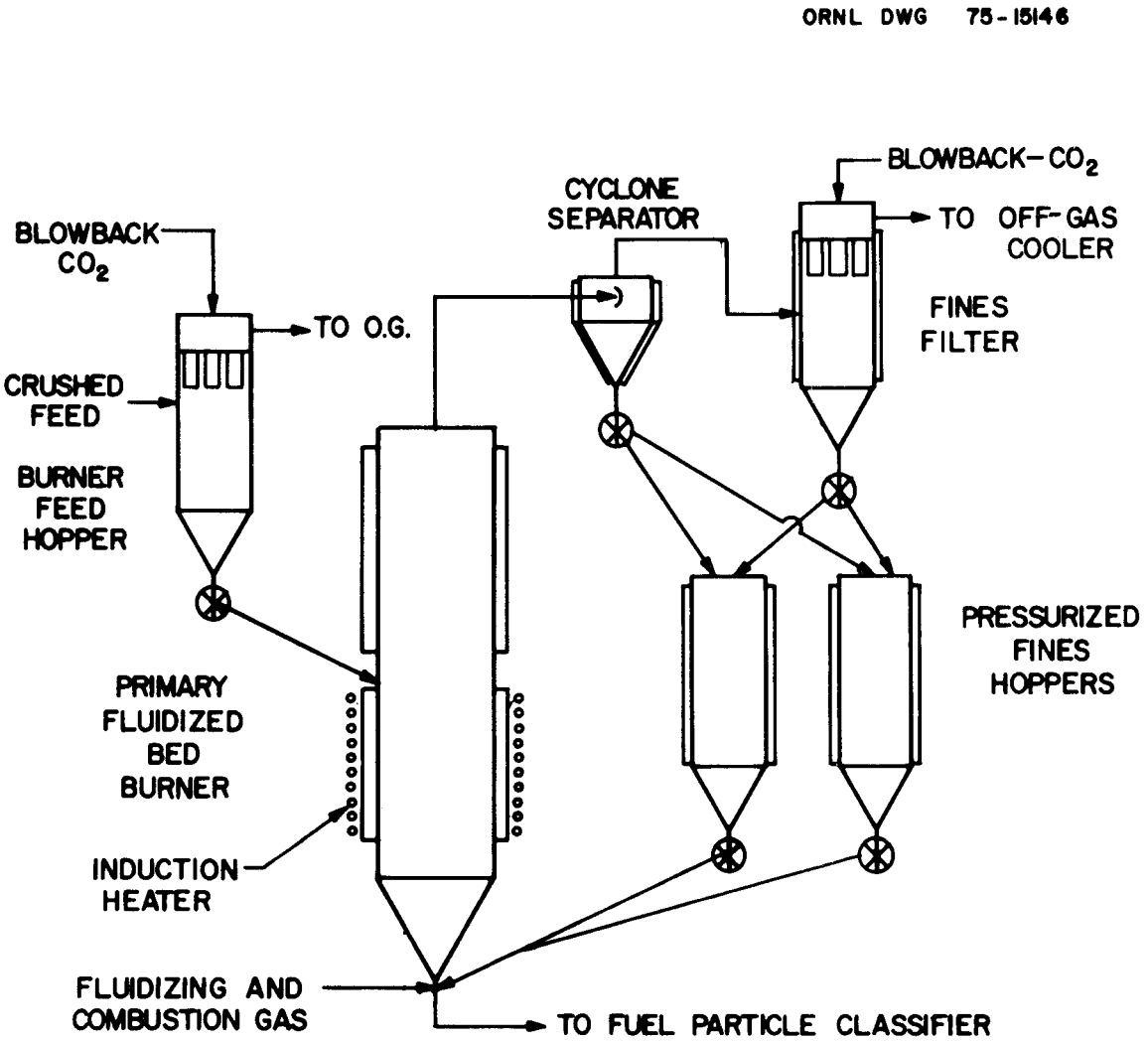

Fig. 9. Fluidized bed graphite burner.

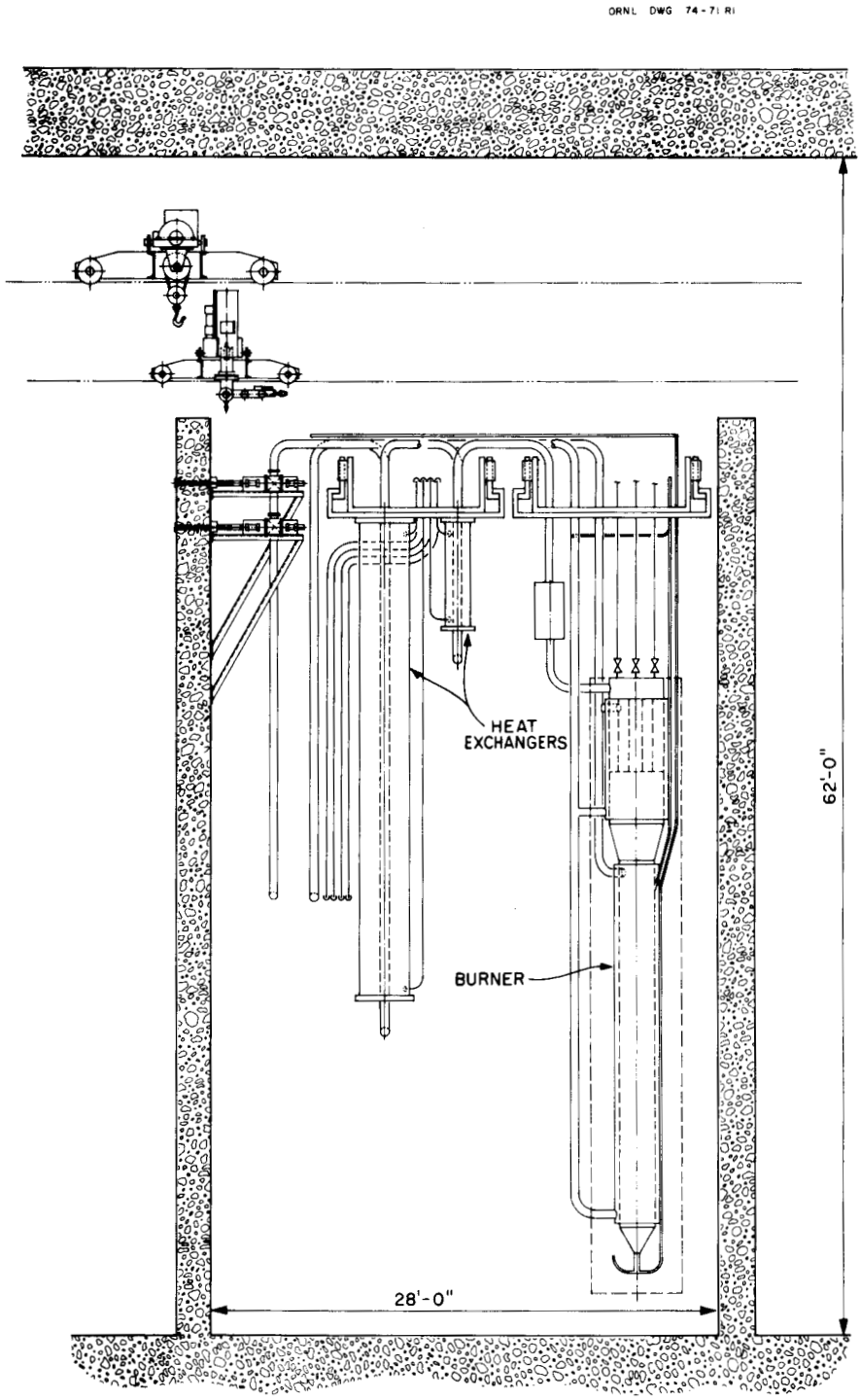

Fig. 10. Fluidized bed primary burner for commercial plant.

ORNL DWG 73-11883R1

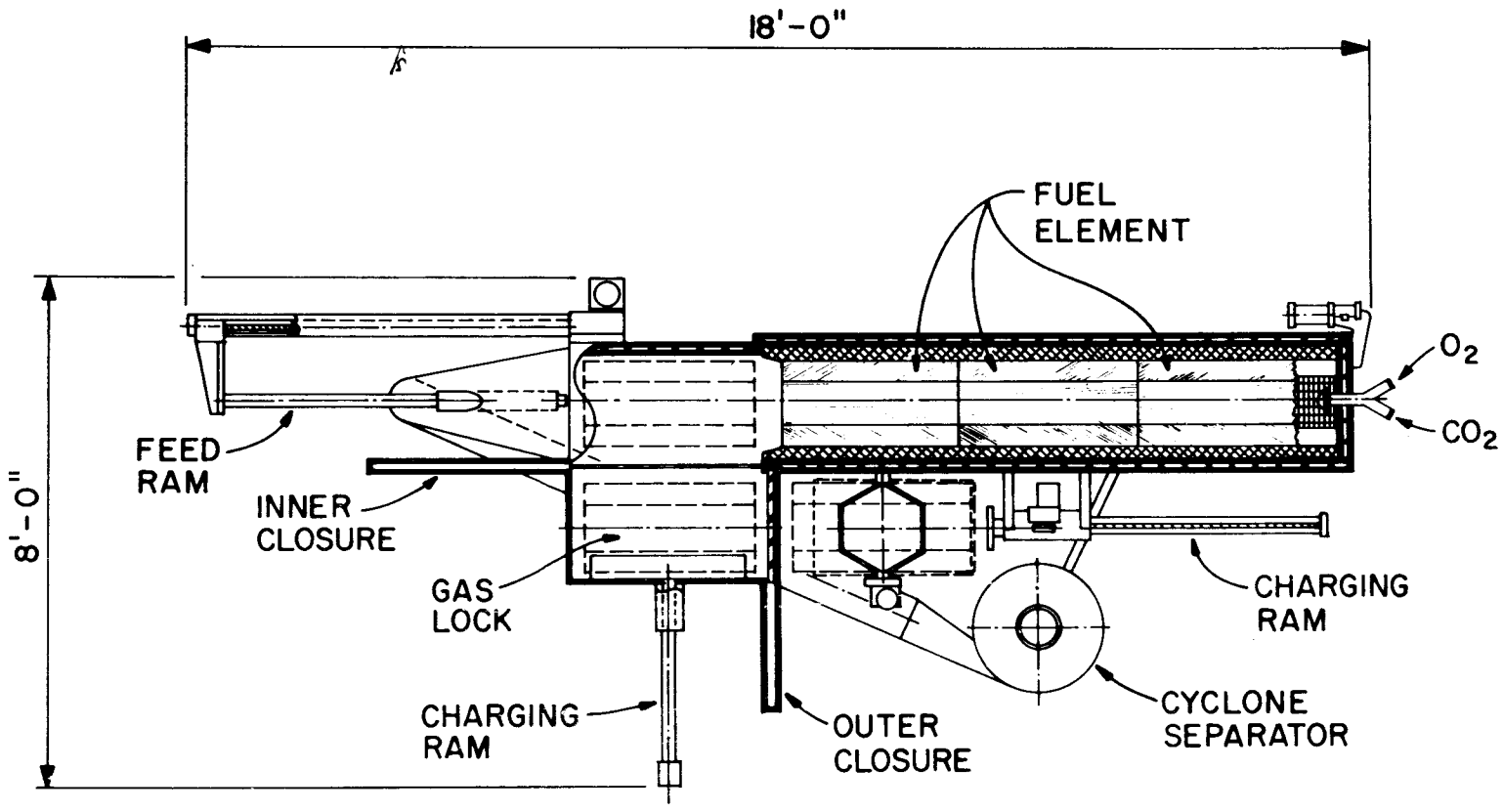

Fig. 11. Whole block burner conceptual plan.

could crack silicon carbide coatings), and physical handling of the particles and residual graphite near the outlet end of the burner. A conceptual approach to the first problem is so-called "adiabatic" burning, in which generated heat is carried out by hot gases, and burner temperature is controlled by carbon dioxide recycle and the endothermic $C + CO_2 \rightarrow 2CO$ reaction. A possible variation of the whole-block burner is the chunk burner, in which only one stage of crushing is required, and the burner has a static bed of large chunks.

5.4. Particle Separation and Dissolution

Primary burning removes the block graphite, the outer carbon coatings from the TRISO coated fissile particles, and all of the carbon coatings from the BISO coated fertile particles. Separation of these two types of particles will be done via their density differences. The thoria kernels, which should survive primary burning intact, have a density of about 10, while the fissile particles, with their porous carbon and silicon carbide overcoatings, have a density of about 3. Gas elutriation has been shown to be very effective for separation of these particles. A zigzag column gives the greatest efficiency, and can be operated with crossovers of only 1% to fertile particles and 5% to fissile particles. In Fort St. Vrain fuel, the fertile particles are also TRISO coated, but the same type of separation is expected to be effective. After separation, the fertile particles are processed to recover ^{233}U (from a mixture with Th and fission products), while the fissile particles may be stored or may be processed to recover residual ^{235}U (from a mixture with fission products and some Pu that is generated during irradiation).

For BISO coated fertile fuel, the separated particles are dissolved directly in "Thorex reagent" (concentrated nitric acid plus small amounts of fluoride and aluminum ion). High density thoria resists dissolution unless catalyzed by fluoride ion. In the case of TRISO coated fertile fuel, the particles are sent through a small roll crusher (or jet grinder) to break the silicon carbide coating, then burned in a secondary (so-called "endothermic") fluid bed burner to remove the inner carbon coatings, and finally dissolved as above. The dissolver solution, which contains uranium,

thorium, fission products, and some higher actinides, is ready for separation and purification by solvent extraction after centrifugation to remove insoluble solids that are sent to solids waste disposal.

If the fissile particles are to be processed, the TRISO coatings are broken and a secondary burn is made, as described above. The ash is then dissolved in nitric acid (a catalyst is not expected to be required), the insoluble solids are removed, and the liquor is then ready for solvent extraction.

5.5. Solvent Extraction

Two different solvent extraction flowsheets are required: the Purex process for the fissile-derived liquor, and a modified acid-Thorex process for the fertile-derived liquor. In terms of recoverable fissionable isotopes, the Thorex flowsheet, which yields ^{233}U, is of the greatest interest. The Purex flowsheet will be required for the recycle of ^{235}U particles.

In the modified acid Thorex process, the highly acidic solution from the dissolution step is given an "acid adjustment," whereby most of the excess acid is driven off by simple heating or steam stripping.[15] The adjusted and diluted feed is then taken through a series of liquid-liquid extractions in pulsed columns, utilizing water-immiscible solutions of tributyl phosphate (TBP) in n-dodecane (NDD). The process described was developed for thorium cycle fuels to accomplish the mutual separation of thorium, uranium, other actinides, and fission products. The original Thorex process was improved by substitution of nitric acid for aluminum nitrate as the salting agent (which minimizes the amount of waste solution), and the extraction cycles were modified to handle the large quantities of fission products resulting from high burnup.[16] When first developed, the Thorex process was used with fuels with relatively low burnup (10,000 to 30,000 MWd/ton). The HTGR fertile particles will have a higher burnup (about 50,000 MWd/ton), but it is expected that this higher burnup will not create any major problems for solvent extraction.

Flowsheets for the modified Thorex process are shown in Figs. 12-14; the circled numbers indicate the relative volumes in each stream. In the

ORNL DWG 73-6945 RI

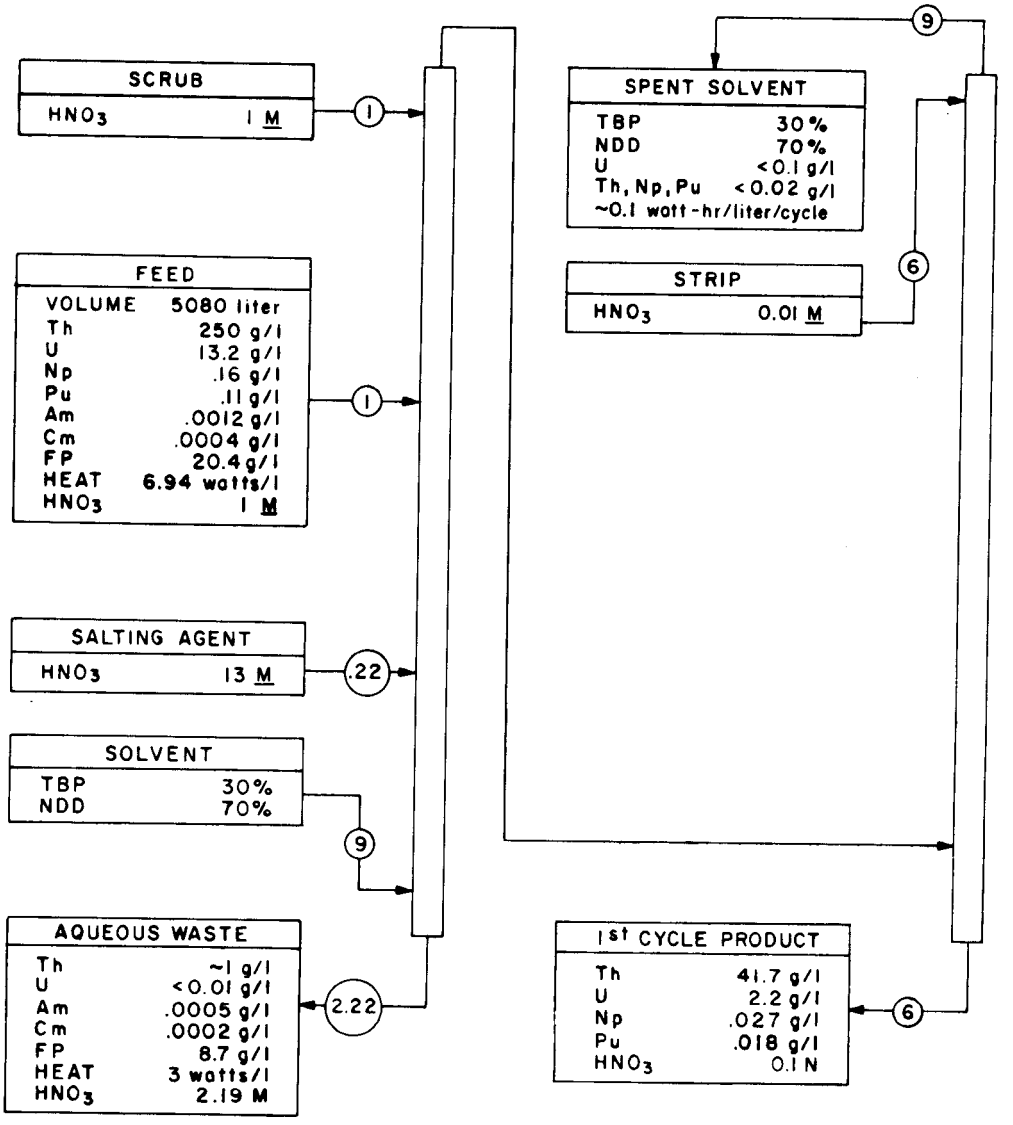

Fig. 12. First cycle Thorex (acid feed).

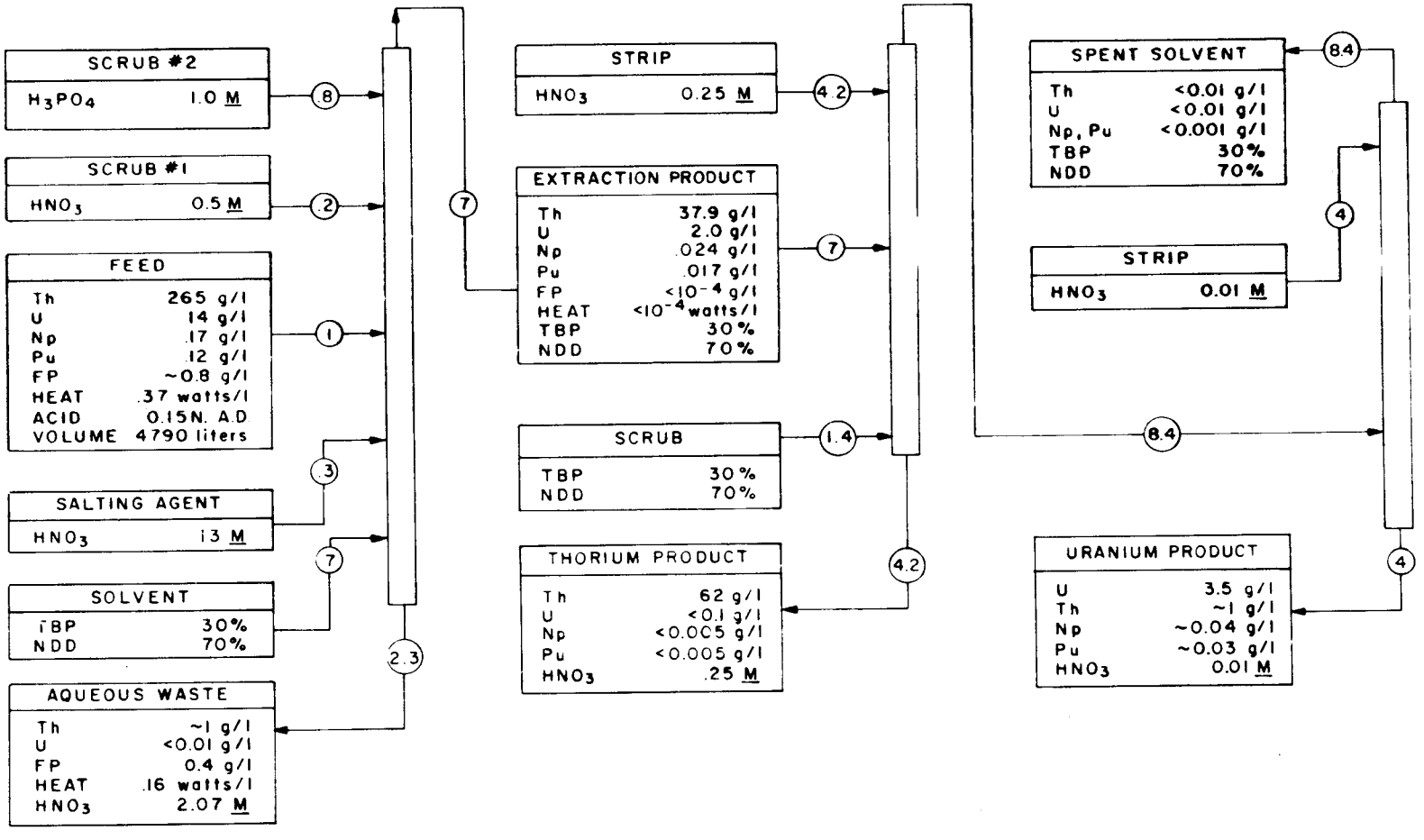

Fig. 13. Second cycle Thorex (acid deficient feed).

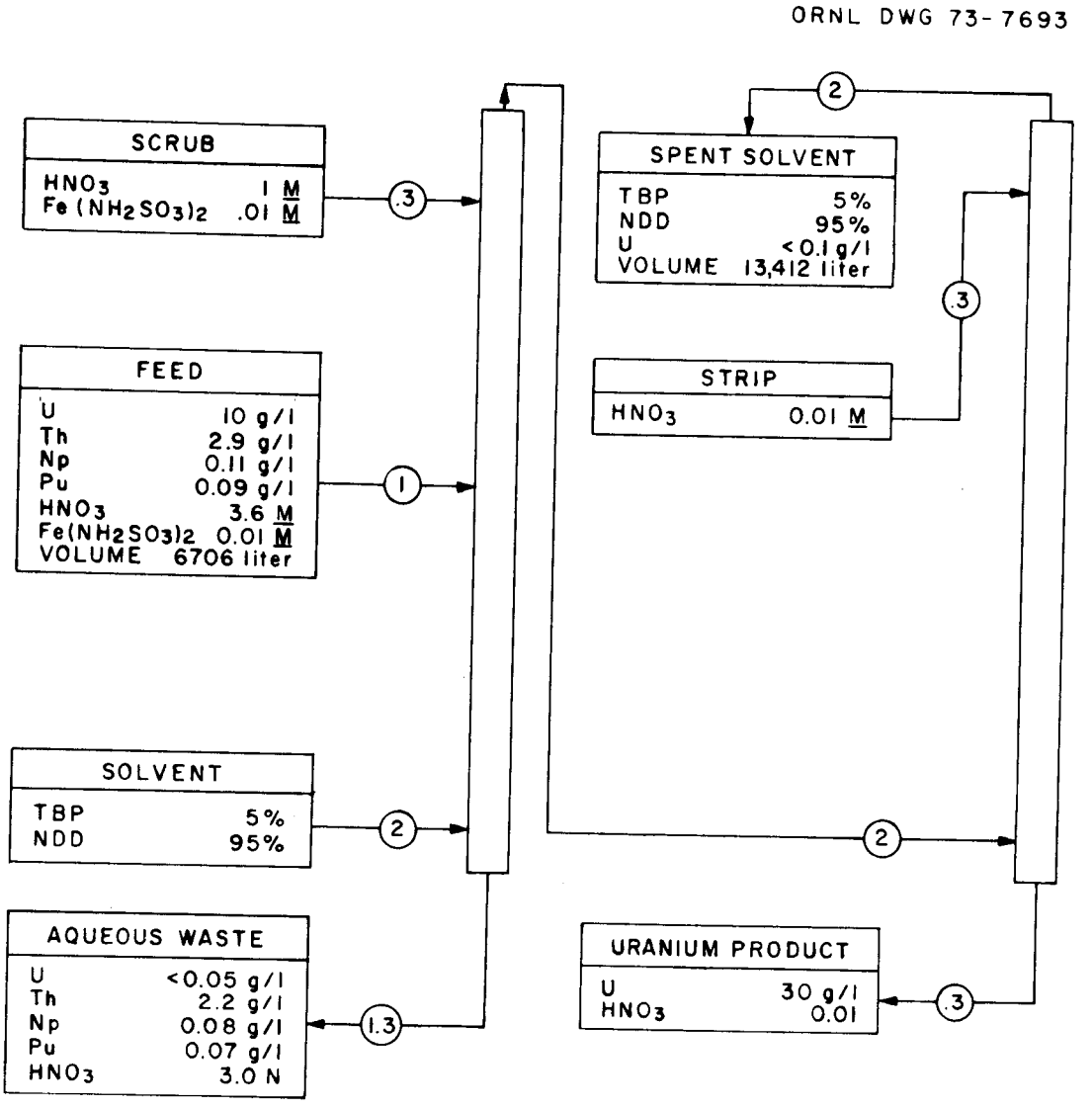

Fig. 14. Recovery cycle of ^{233}U.

first cycle, Th, U, and actinides are separated from fission products (FP) using acid feed and 30% TBP. In the second cycle, Th and U are partially separated from each other using acid deficient (A.D.) feed and 30% TBP. Finally, in a third cycle, the separation of Th and U from each other is completed by using acidic feed and 5% TBP. This product, uranyl nitrate solution, about 0.13 M in U and with a small amount of free acid, is concentrated to about 1 M for use in refabrication. It may be given a final treatment with ion exchange to lower the activity from ^{232}U daughter products. Tentative specifications on the product, uranyl nitrate, are given in Table 5.

The Purex process has been used extensively for reprocessing of light water reactor fuels, which have a burnup of about 30,000 MWd/ton. In this process U and Pu are separated from each other after first being separated from fission products. TBP is used as the solvent, Pu(IV) and U(VI) are coextracted to achieve separation from fission products, after which Pu(IV) is reduced to Pu(III) with ferrous sulfamate for separation from U(VI). The HTGR fissile particles will have a burnup of about 700,000 MWd/ton. Since there has been no experience with reprocessing of fuels at this burnup, process performance under these conditions is unknown at this time.

5.6. Off-Gas Decontamination

The present trend toward decreasing the permitted release of radioactivity into the environment, currently directed at power-generating plants, is having an impact on nuclear reactor fuel reprocessing studies, even though no new restrictions have as yet actually been imposed on reprocessing plants. The very large volume of carbon dioxide from the burner, with its associated relatively very small volumes of radioactive gases, creates a challenging problem for fuel reprocessing development. Regardless of which processes are chosen to decontaminate the burner off-gas, they should not only meet the present gaseous effluent cleanup requirements, but should also have the inherent capability of meeting future, more stringent effluent cleanup requirements of the type proposed for power reactors.

Table 5. Tentative uranium product specifications[a]

Product	Specification
^{233}U	1.0 ± 0.05 M $UO_2(NO_3)_2$
Pu	$\leq$ 30 ppm
Th	$\leq$ 50 ppm
^{232}U	$\leq$ 1500 ppm
P	$\leq$ 200 ppm
Si	$\leq$ 400 ppm
Fe plus Cr	$\leq$ 200 ppm
S	$\leq$ 30 ppm
C	$\leq$ 200 ppm

Total metallic impurities: $\leq$ 2000 ppm

NO_3/U (mole ratio): between 2.0 and 2.5

Residual β-γ activity: 6 Ci/ℓ excluding ^{233}Pa activity

Boron equivalent: 20 ppm (fissile metal basis)
2 ppm (total HM basis)

[a]Impurities given in ppm are on a U-basis.

The major source of off-gas is the primary burner, but other sources also contribute. Examples are the crushers, particle separators, dissolver, and instrument purges. The large CO_2 content (up to 90%) and the large volume (about 2000 scfm for a commercial plant) distinguish HTGR fuel reprocessing plant off-gas from that of other plants. The CO_2 interferes with the processes normally used to concentrate ^{85}Kr out of an air stream, and a new process had to be developed. Off-gas cleanup also includes ^{129}I and ^{3}H removal, and holdup of ^{220}Rn long enough to permit essentially complete decay to solid products (about 10 minutes is long enough for the holdup, since the half-life of ^{220}Rn is only 55 sec).

A general flowsheet for off-gas cleanup is shown in Fig. 15, while Fig. 16 gives more detail. The quantities shown in Fig. 16 are for the ACC pilot plant, and are sized to handle the off-gas from 24 fuel elements per day.

Iodine will be removed by lead and silver zeolites, radon will be held up on molecular sieve type 5A, tritiated water will be taken out with type 3A molecular sieve, and krypton will be removed via the KALC process. The iodine[17] and water removal development are being done by ACC. Radon holdup is being developed by ACC for reprocessing and by ORNL for refabrication.[18]

Several processes for removing ppm quantities of ^{85}Kr and other noble gases from various gas streams are available in current technology. However, these processes are not applicable to an off-gas stream which is primarily CO_2 because of the many similarities between Kr and CO_2 in those physical properties (such as adsorption and solubility) that provide the basis for previously developed separation schemes.[19] By capitalizing on this similarity, the relatively high solubility of Kr in CO_2[20] provides the basis for separating Kr from the light gases (O_2, N_2, CO) present in the HTGR CO_2 off-gas, while a subsequent fractionation step separates the Kr from the liquid CO_2 solvent. This process, known as KALC (from Krypton Absorption by Liquid Carbon Dioxide)[21] has the added advantage that the absorbent is one of the species already present in the gas mixture, thus avoiding the introduction of a new component. Furthermore, the KALC process may also provide a means to obtain additional decontamination for

ORNL DWG 74-8019

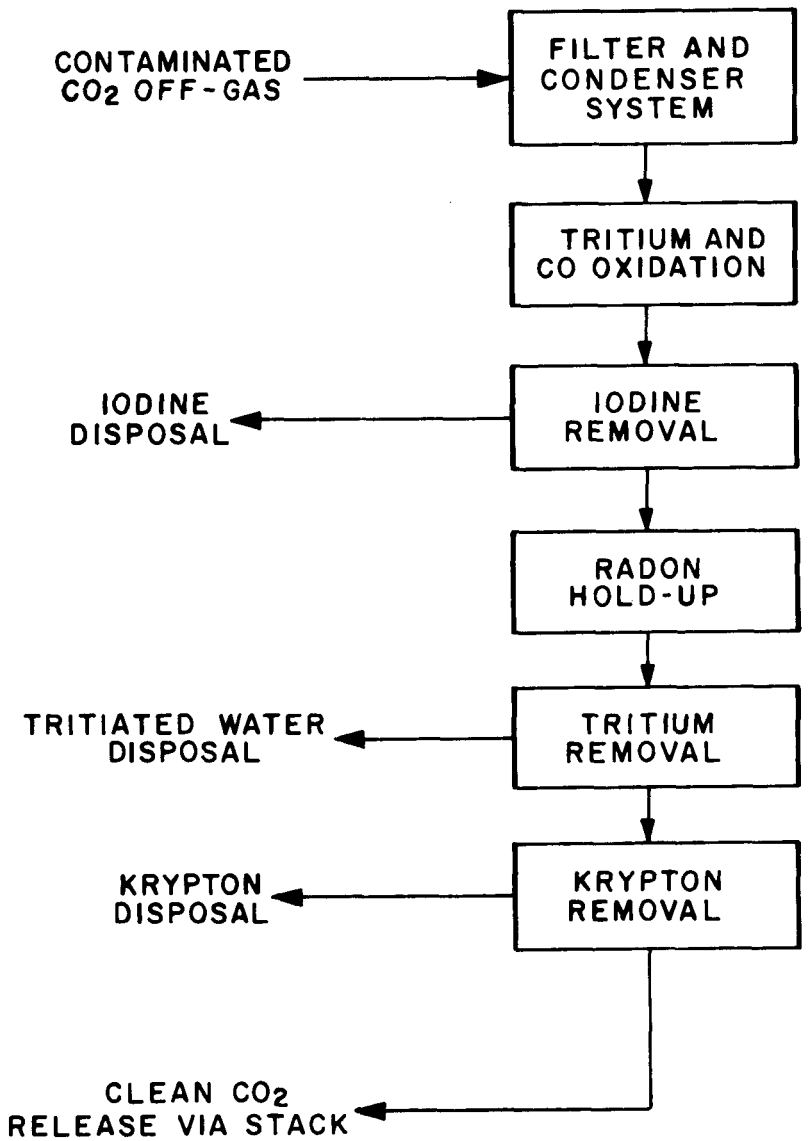

Fig. 15. General flowsheet for off-gas cleanup.

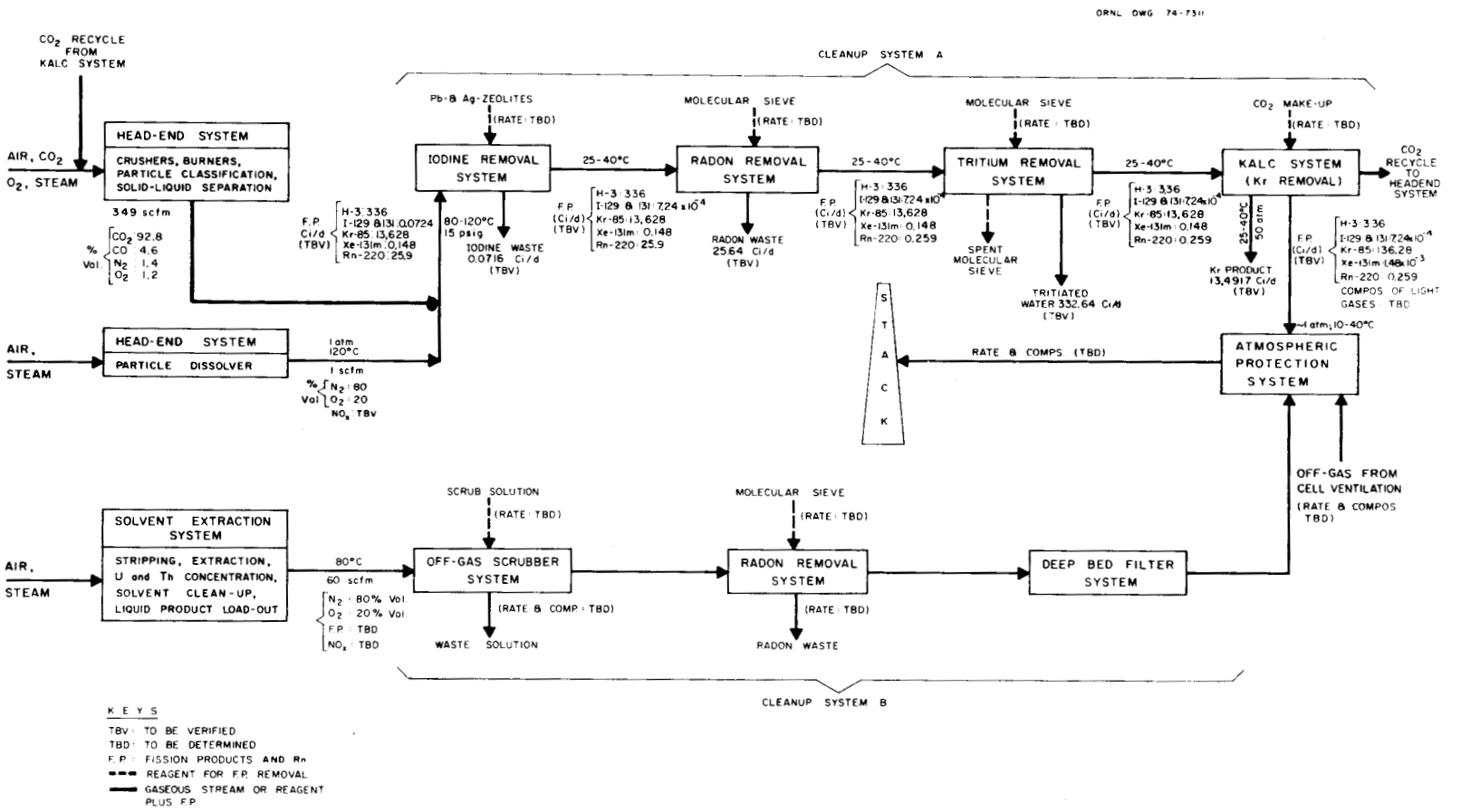

Fig. 16. Schematic flow diagram of off-gas system for HTGR prototype fuel processing facility and approximate material balance (TBV).

tritiated water, I_2, and particulate matter during the various scrubbing and fractionation steps.

The KALC process (Fig. 17) operates as follows: (1) incoming CO_2, Kr, and light gases are chilled and scrubbed free of Kr with liquid CO_2, while most of the light gases (along with some CO_2) are discharged; (2) the liquid CO_2, which now contains all the Kr and the balance of the light gases, is fractionated to remove these remaining light gases, which are then recycled to the scrubber because they contain some Kr; (3) the Kr-rich CO_2 is further fractionated to boil off the Kr, which is sent to storage for ultimate disposal; (4) the remaining liquid CO_2, now free of both light gases and Kr, provides the scrubber liquid for the first step, plus an excess (corresponding to steady-state input of HTGR off-gas to the system) which is discharged. Xenon, which is also present in the burner off-gas in ppm amounts, will tend to carry along with the Kr up to the final stripping step; however, it is of relatively little significance since its activity, which is short-lived, will have decayed out prior to reprocessing. Pilot studies have demonstrated the feasibility of the KALC operations. An early theoretical analysis[22] of the various steps shows that it should be practical to release no more than about 1% of the krypton and 30% of the xenon from the system with the decontaminated gaseous carbon dioxide waste; another 0.01% of the krypton and 67% of the xenon leave with a decontaminated liquid carbon dioxide waste. The remaining ~ 99% of the krypton will probably be compressed into a container, along with a comparable volume of CO_2 and other gases, and stored. The decontaminated gaseous carbon dioxide waste stream contains about one-fifth of the CO_2; about four-fifths is in the decontaminated liquid waste stream. The liquid waste stream can be vaporized, and released to the environment, along with the gaseous waste stream.

Very recently, improved calculational methods[23,24] and experimental results[25] have verified the KALC concept.

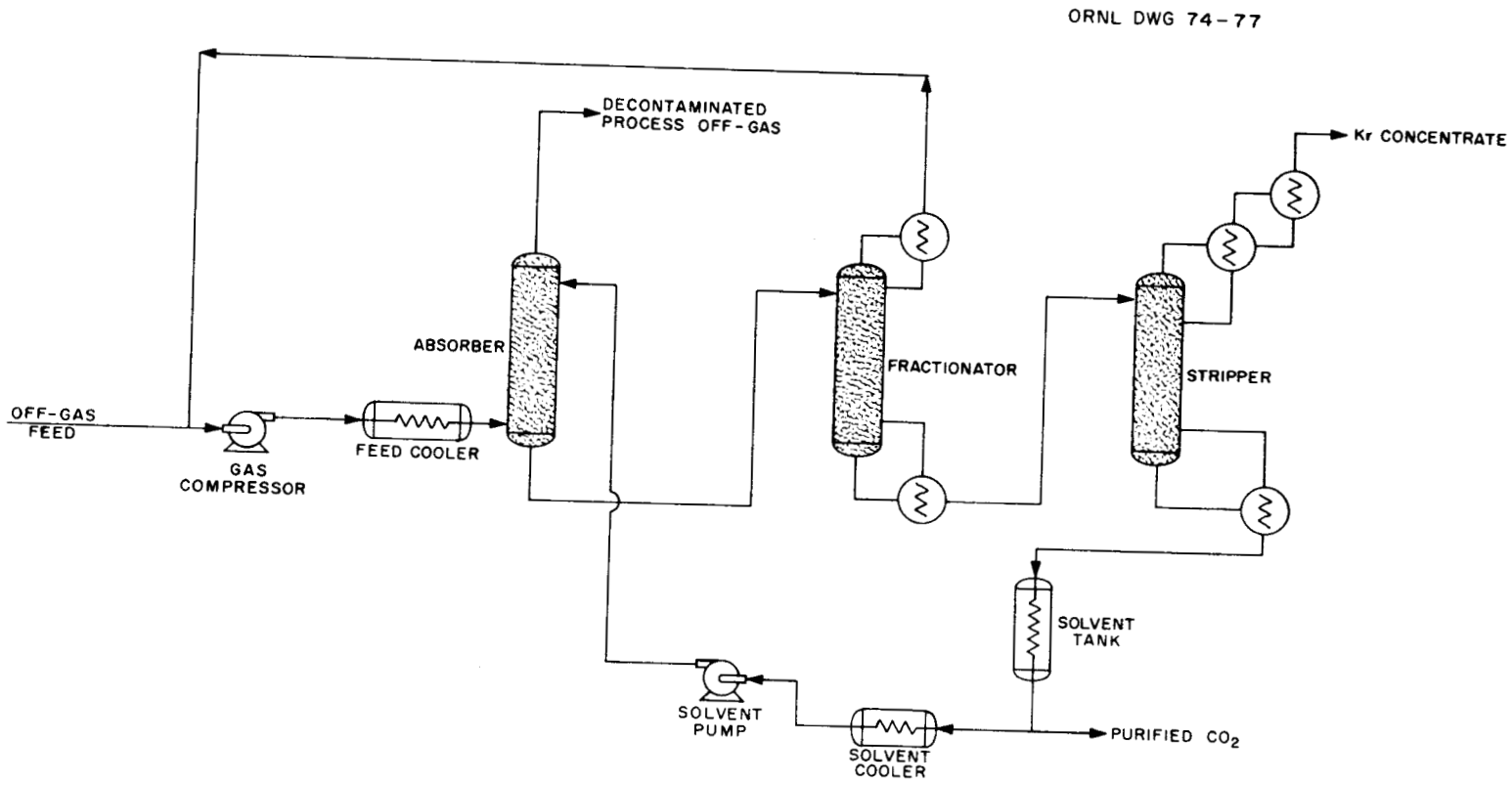

Fig. 17. Selective absorption system for krypton removal.

6. REFABRICATION

6.1. General Description

The principal refabrication steps for the development pilot plant are outlined in Fig. 18. These start with purified ^{233}U nitrate solution from the reprocessing pilot plant, which is then cleaned up by ion exchange to remove ^{232}U daughters. In a commercial installation, reprocessing and refabrication would be next door to each other, and final cleanup would be handled by the reprocessing section. In addition to the major systems shown in Fig. 18, other systems related to Quality Assurance (QA), accountability, and the handling of materials (which can become a controlling factor in hot cell operations) are also required. These systems are shown in Fig. 19, which also indicates the dual development programs of laboratory development and pilot plant design, construction, and operation. In addition, an ongoing program of irradiation testing of fuel materials will provide guidance in fine tuning and, if necessary, modifying the reference fuel composition and structure.

The refabrication flowsheet is based on kernels obtained by loading ^{233}U onto spherical Weak-Acid ion exchange Resin (WAR), which will be described in more detail later. After loading the resin, it is carbonized by heating in a fluidized bed to about 1000°C in an inert atmosphere; this essentially accomplishes a destructive distillation of the organic resin, leaving a residue of carbon, and reduces the U(VI) to UO_2. The overall composition at this point is about $UO_2 + 5C$. Heating above 1500°C causes densification and conversion (either complete or partial) of the oxide to carbide:

$$UO_2 + 4C \rightarrow UC_2 + 2CO \quad .$$

In practice, to achieve the most favorable irradiation properties, it may be preferable to leave a mixture of UO_2 and UC_2, plus residual carbon.

Following conversion, the various coatings are applied (also in fluidized beds) by pyrolysis of hydrocarbon gases (for C coatings) or of chlorosilanes plus H_2 (for SiC coatings). The coated fissile kernels are

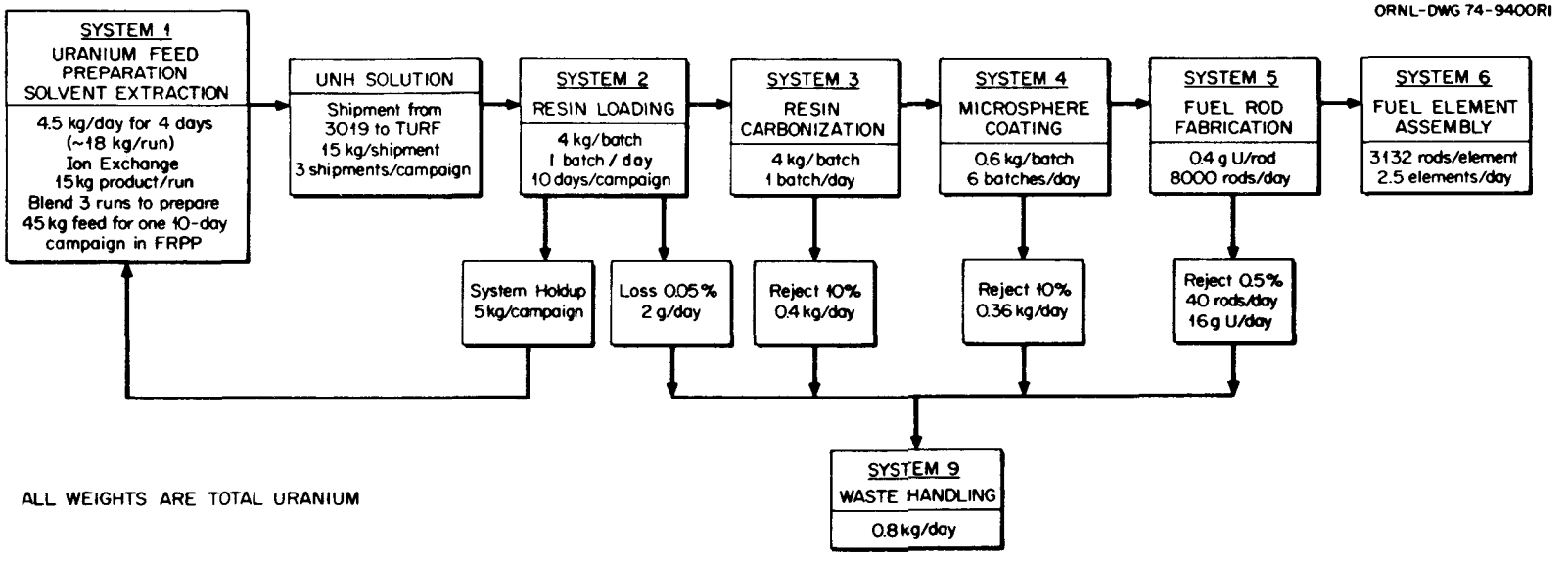

Fig. 18. Flow diagram for HTGR fuel refabrication pilot plant. (Heavy metal mass flows are shown.)

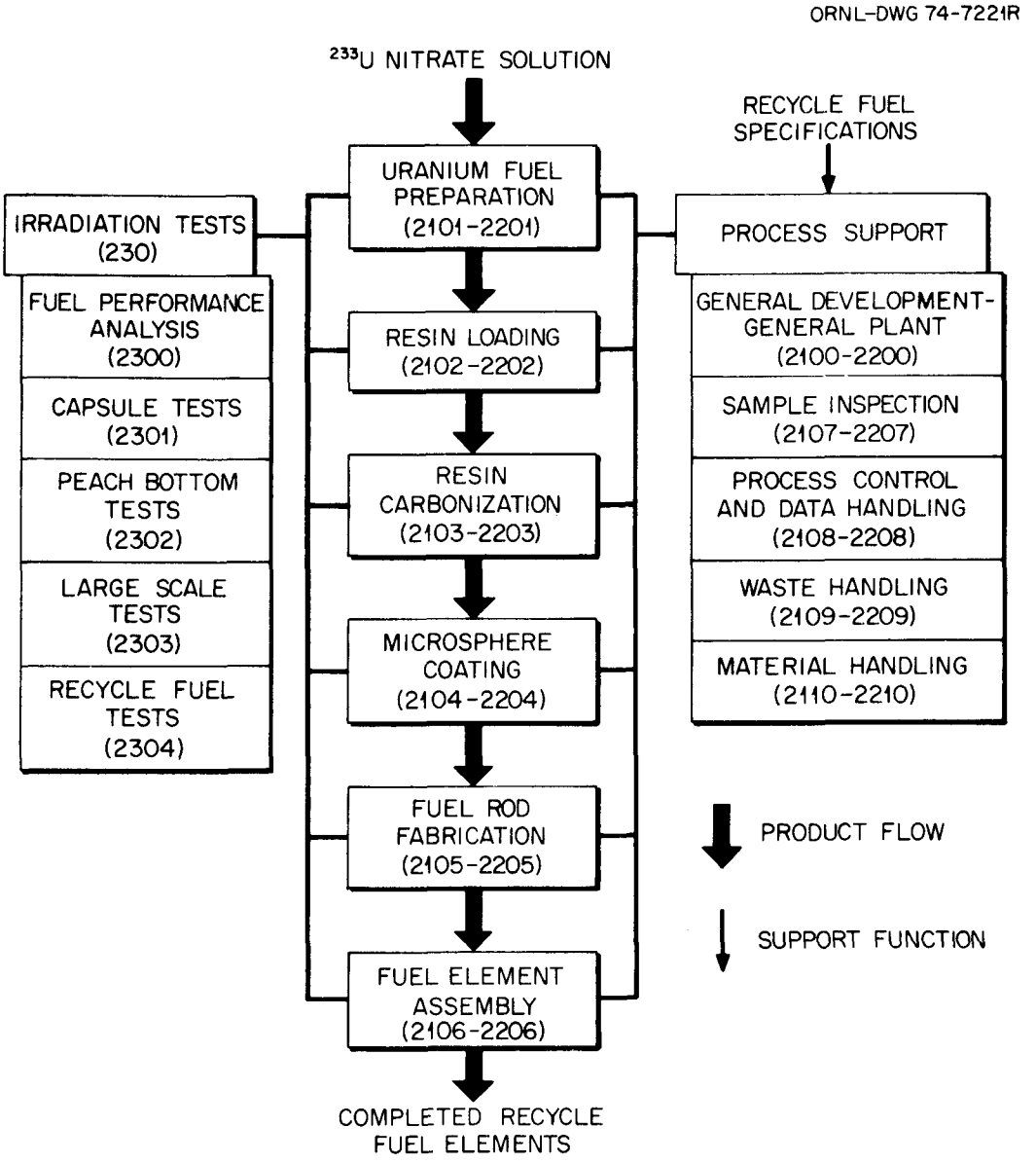

Fig. 19. HTGR fuel fabrication process flow diagram.

then mixed with coated thoria kernels (from a fresh fuel plant) and a matrix material to form the fuel rods. After inspection, the fuel rods are loaded into the graphite fuel blocks, and are carbonized and annealed to 1800°C in situ. At present, engineering-scale equipment for the refabrication pilot plant is being developed.

6.2. Fabrication of Fissile Kernels

There are three general methods of producing HTGR kernels on a large scale: (1) powder agglomeration, followed by sintering or fusion; (2) sol-gel procedures, which come in numerous variations; and (3) resin-based methods. Sol-gel processes are used to make the ThO_2 fertile kernel; this is a cold, or contact operation. A summary of sol-gel development at ORNL has been published.[26] Thoria sols are prepared by steam denitration of the nitrate,[10] and gelation is accomplished by one of three general methods: water extraction, developed at ORNL;[27] external ammonia gelation, to be used at the GAC fresh fuel plant planned for Youngsville, N.C.; and internal chemical gelation. All three methods yield ThO_2 microspheres which can be sintered to nearly theoretical density at relatively low temperatures.

The reference process for recycle fuel is the resin method. The inherent advantage of the resin process for fabrication of fissile kernels is that the resin is supplied in the form of microspheres and, therefore, a sphere-forming operation is not required in-cell (nor, for that matter, out-of-cell). The resin of choice is a weak-acid carboxylate type resin (WAR) that has a high volume capacity and contains only C, H, and O. The loading reaction is a simple exchange:

$$2WAR(H) + UO_2^{2+} \rightleftarrows WAR_2(UO_2) + 2H^+ .$$

However, the equilibrium favors the acid form of the resin and the reaction must be driven by neutralizing the H^+ product. This can be done by either supplying the uranium as UO_3 (plus some nitrate to provide an ionic reactant),[28] or by starting with "acid-deficient" uranyl nitrate. The driving reaction in the UO_3 method is:

$$2H^+ + UO_3 \rightarrow UO_2^{2+} + H_2O \quad ,$$

giving a net reaction:

$$2WAR(H) + UO_3 \xrightarrow[\text{nitrate}]{\text{aqueous}} WAR_2(UO_2) + H_2O \quad .$$

The second method is based on the fact that uranyl nitrate can be made up to 25% acid deficient in solution by removing HNO_3:

$$UO_2(NO_3)_2 + 0.5HOH \rightarrow UO_2(OH)_{0.5}(NO_3)_{1.5} + 0.5HNO_3 \quad .$$

The nitric acid can be removed either by extended steam stripping at about 170°C, or by controlled extraction with amines. The amine extraction method has been selected as the reference process; a flowsheet based on this method is shown in Fig. 20. Loading by the acid-deficient method requires recycle of liquor to the amine contactor after the loading step, since only ~ 25% of the contained uranium loads per pass.

Also shown in Fig. 20 is a batch-type loading procedure, wherein a batch of resin is loaded with uranium by contact in a fluidized column. Continuous loading has also been demonstrated by using a modified Higgins-type column.[29] A schematic view of such a column is shown in Fig. 21. The loaded resin is washed and dried prior to carbonization. A summary of the properties of both fissile and fertile kernels is given in Table 6.

7. WASTE HANDLING

The overall management of wastes requires not only that they be adequately removed from plant effluents, but that an environmentally acceptable means of disposal and/or storage be available. In many ways this is an open question at present, but ERDA is actively seeking answers. Diverse approaches, including burial in geologic salt formations or deep ocean trenches, transmutations in nuclear reactors, and storage in man-made vaults are being considered. The ultimate goal is to contain wastes long enough so that when the residue is finally returned to the environment it will have a residual activity no higher than natural background. With regard to waste handling, the recycle development program must resolve the processing and isolation of HTGR wastes. Final disposition of these wastes falls within the scope of another program, but HTGR recycle development must provide for the treatment of its own wastes at least to the point where they are concentrated in a form suitable for interim storage.

ORNL DWG 74-6299

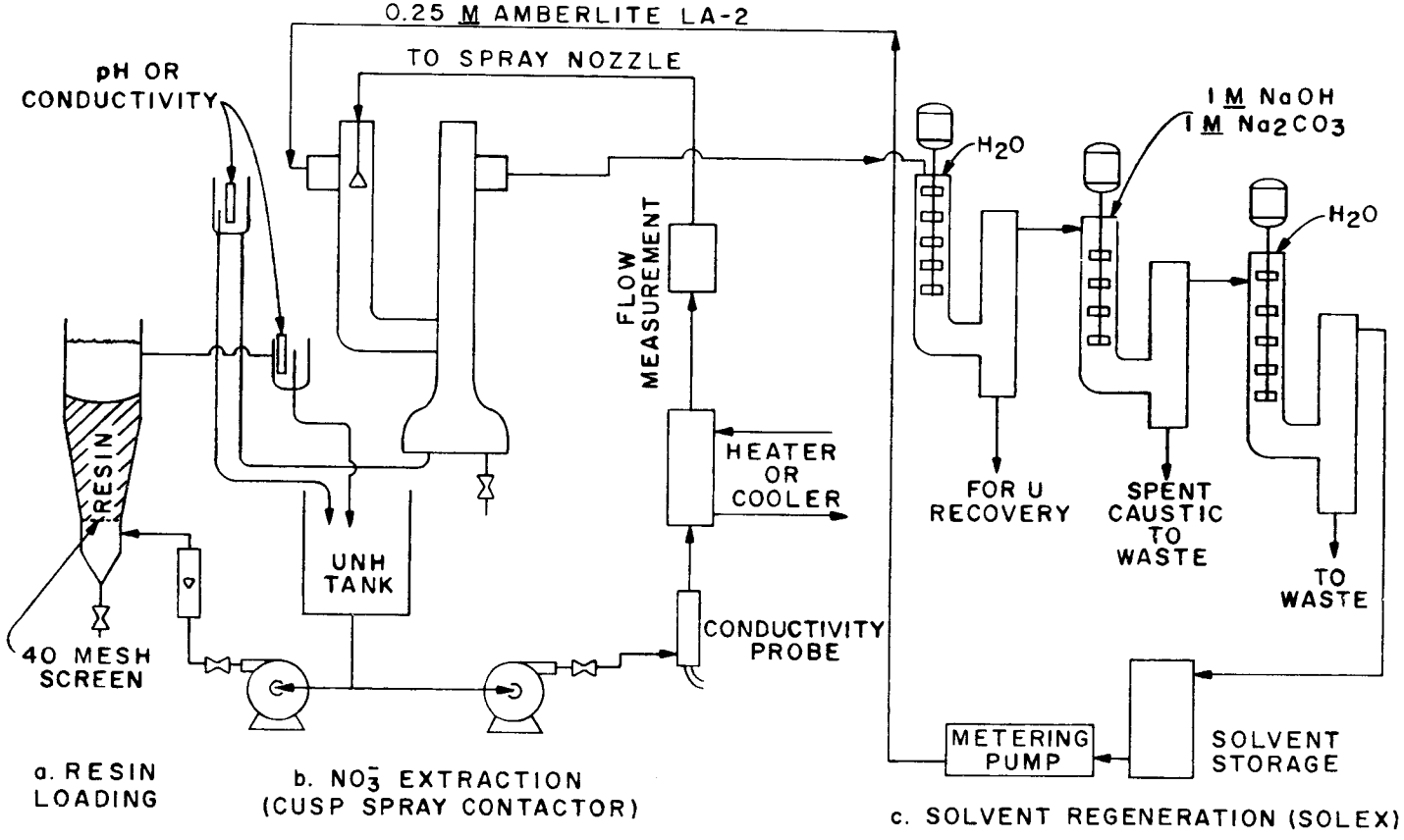

Fig. 20. Test system for NO_3^- extraction and resin loading.

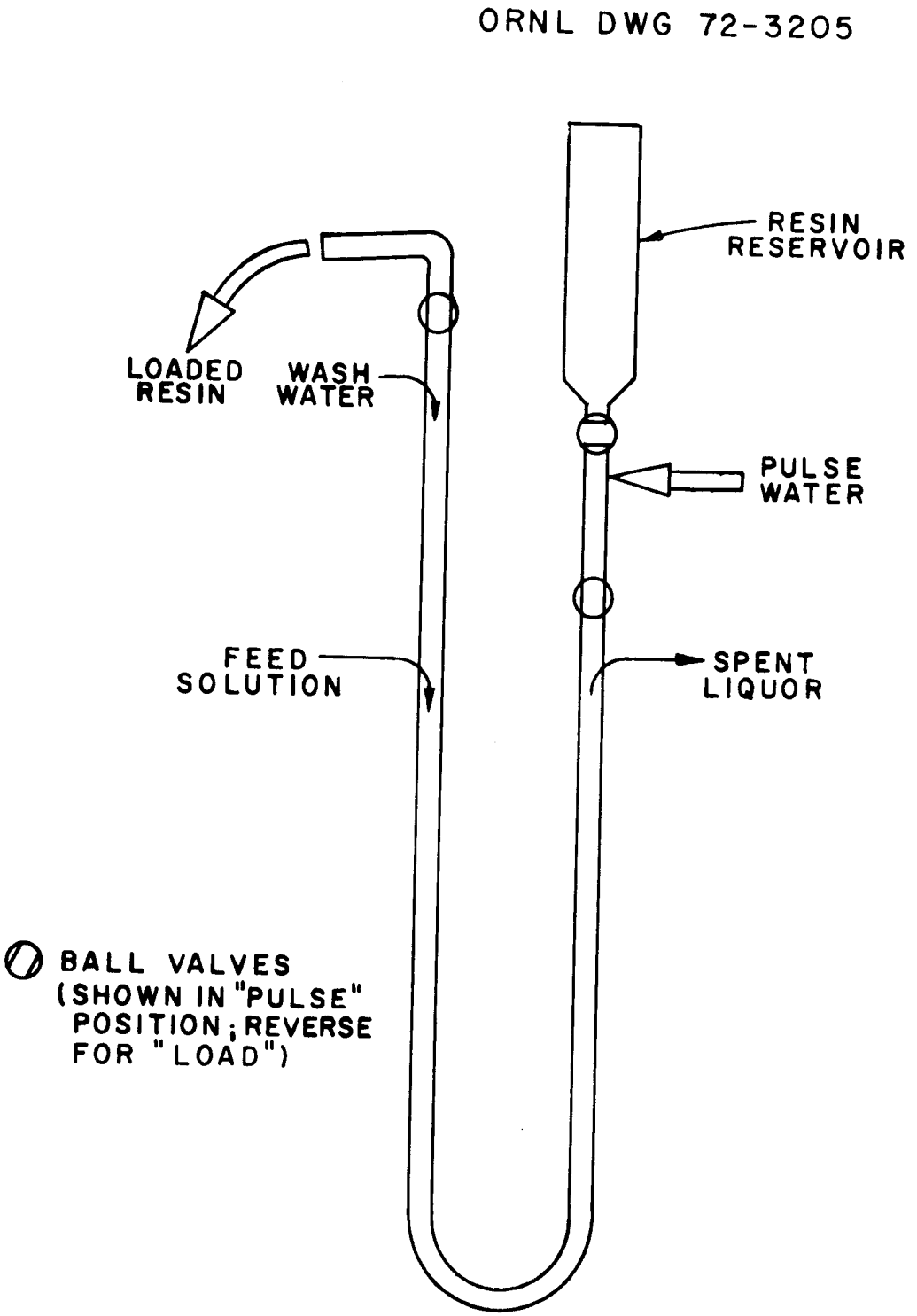

Fig. 21. Continuous column for uranium loading of ion exchange resin.

Table 6. Typical recycle fuel particle dimensions.

	Fissile particle	Fertile particle
Kernel forming process	Resin	Sol-Gel
Composition[a]	UC_xO_y	ThO_2
Resin diam. - dry, U-loaded (μm)	550	
Kernel diam. (μm)	400	500
Uranium content (μg/kernel)	74.4	
Kernel density (g/cm^3)	3.2	10.0
Coating type	TRISO	BISO
Buffer carbon (μm)	50	85
Inner dense carbon (μm)	30	
Silicon carbide (μm)	25	
Outer carbon (μm)	30	75
Total particle diameter (μm)	670	820

[a]The fissile particle will probably be a partially converted oxide, i.e., a mixture of UO_2 and UC_2, plus some residual carbon. This mixture gives the best irradiation behavior. The molar ratio of oxide to carbide is nominally about 50/50, but it can range from about 25/75 to 75/25.

Some HTGR recycle wastes are not significantly different from LWR recycle wastes and can be processed and stored in a similar manner. This includes, for example, tritium and iodine removal wastes, and facility wastes such as rags, tools, etc. On the other hand, many HTGR recycle wastes are unique to this reactor type, for example, silicon carbide hulls, condensed volatiles, and second-cycle ^{235}U fissile particles. Also, many HTGR recycle wastes have special properties that require special treatment, for example, solvent extraction wastes (that contain fluoride) and ^{14}C (that is greatly diluted by large quantities of CO_2). These various waste streams have been identified and characterized in a recent study.[30] A summary from this work is shown in Fig. 22.

Wastes from HTGR fuel recycle include the ^{85}Kr, ^{129}I, and ^{3}H, whose removal from the off-gas has been discussed. Storage of ^{85}Kr ($t_{1/2}$ = 10.7 years) and ^{3}H ($t_{1/2}$ = 12.4 years) for about 100 years would permit adequate decay for subsequent release. Storage of ^{129}I ($t_{1/2}$ = 1.7 x 10^7 years) would be required for essentially perpetuity. Other wastes include the fission products and long-lived actinides. The former, which are beta and gamma emitters, will be concentrated, dried and fired, and converted to a storable form (e.g., by encapsulation in a glass matrix). The latter, whose primary hazard is that they include alpha emitters, are presently given the same treatment as are the fission products, but consideration is being given to separating out the actinides and giving them special treatment.

Finally, the head-end flowsheet presently being followed releases ^{14}C to the atmosphere. Whether or not this constitutes a real problem has not yet been definitely answered. In the event that it does, additional treatment will be required. For example, the CO_2 released by burning could be converted to stable $CaCO_3$ by reaction with lime, and then stored as a low-level waste.

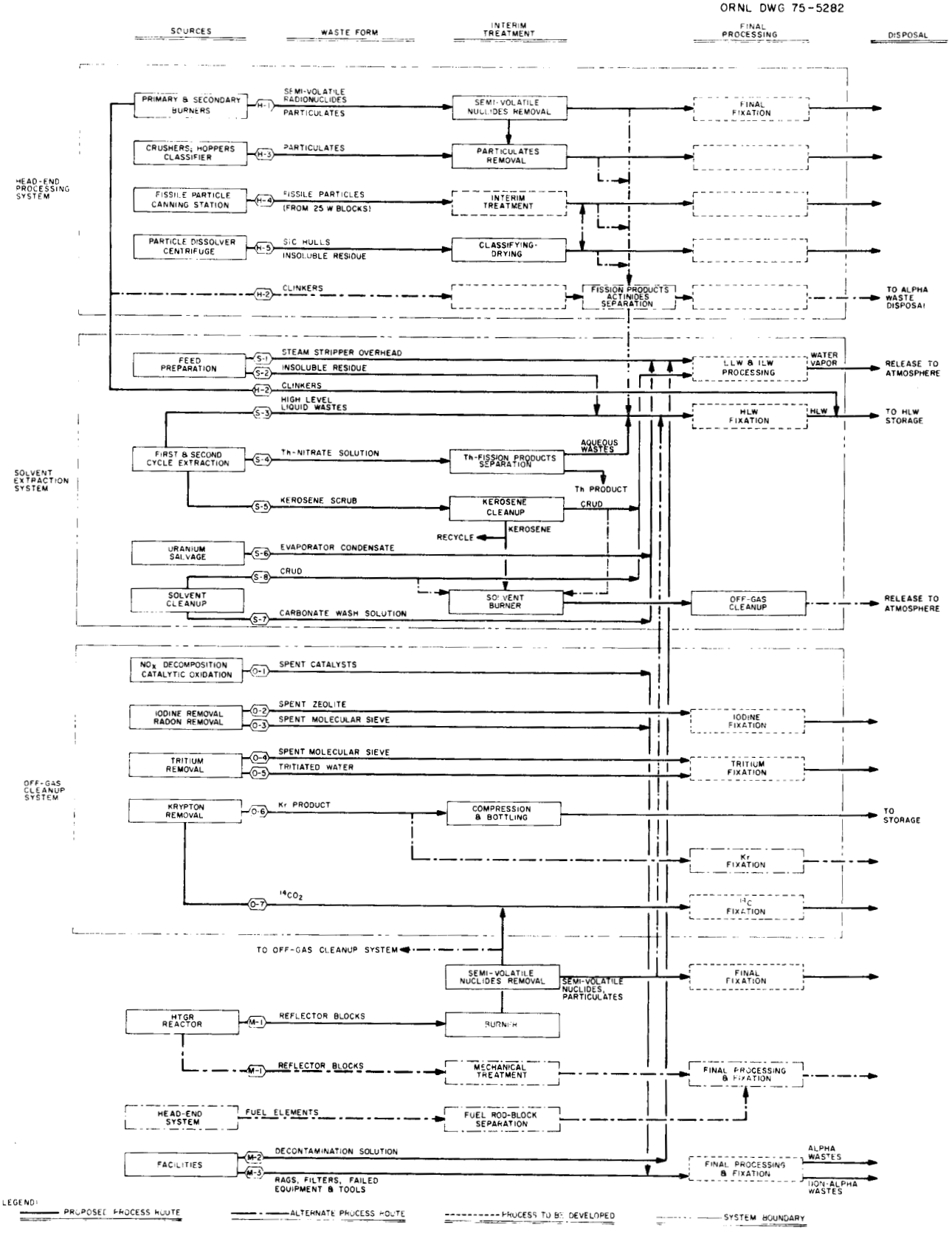

Fig. 22. Overall schematic flow diagram for HTGR fuel reprocessing wastes. (Semivolatiles, liquids and solids.)

8. ACCOUNTABILITY AND SAFEGUARDS

Formerly, accountability was an economic function, since nuclear materials are valuable. Today, the effort and expense exerted to completely control fissionable materials far exceeds the monetary value of the small sidestreams involved, or the minor adjustments to the total inventory. The incentive, of course, is that diverted nuclear materials are potentially dangerous, even in small quantities, as witnessed by India's recent bomb explosion. Postulated incidents involving hijacker-type mentality and/or conscience are also a matter for serious concern.

Translating this concern to HTGR fuel recycle means that very stringent requirements relative to inventory control and physical control will have to be met. These requirements are in addition to the sampling and analytical loads imposed by Quality Assurance Control. These are major problems for remote operation, and their resolution will require a significant development effort. Physical safeguarding will also have to be assured, but in this respect the inherent radioactivity of recycle material provides a measure of built-in protection.

The basic control philosophy is based on the "closed material balance" and "material unaccounted for" (MUF),[31] which combines aspects of financial accounting and engineering material balance. In the closed material balance <u>all</u> streams are analyzed, and the difference between input and output is MUF. Any given MUF is potentially a complex mixture of measurement uncertainties, unrecognized processes losses, and possible thefts or diversions. For nuclear material safeguards, it is common to conclude that no theft occurred if the MUF can be explained by independently calculated measurement uncertainties. From an economic standpoint, however, the MUF should not just be explained; it should be examined until it is thoroughly understood. Only then can it serve its intended purpose.

REFERENCES

1. Nuclear Fuel Cycle, ERDA-33, p. 23 (March 1975).
2. National HTGR Fuel Recycle Development Program Plan, ORNL-4702, Rev. 2, in preparation. Rev. 1 was issued August 1973; the first edition was issued August 1971.
3. C. L. Fitzgerald, V. C. A. Vaughen, K. J. Notz, and R. S. Lowrie, Head-End Reprocessing Studies with Irradiated HTGR-Type Fuels Studies with RTE-7: TRISO UC_2-TRISO ThC_2, ORNL-TM-4653 (in preparation).
4. L. H. Brooks, A. L. Lotts, and R. G. Wymer, "Progress in the Thorium-Uranium 233 Reprocessing-Refabrication Technology," in Proceedings of the ANS Topical Meeting, May 7-10, 1974, Gatlinburg, TN., CONF-740501 (May 1974).
5. C. A. Heath and M. E. Spaeth, "Reprocessing Development for HTGR Fuels," Proceedings ANS/CNA Joint Topical Meeting, April 28-30, 1975, Toronto, CNS ISSN 0068-8517, 75-CNA/ANS-100 (April 1975).
6. E. R. Merz, G. Kaiser, and E. Zimmer, "Progress in the Th-^{233}U Recycle Technology," in Proceedings of the ANS Topical Meeting, May 7-10, 1974, Gatlinburg, TN., CONF-740501 (May 1974).
7. Potential Nuclear Power Growth Patterns, WASH-1098 (December 1970).
8. Environmental Survey of the High Temperature Gas-Cooled Reactor (HTGR) Fuel Cycle, (in preparation; to be issued as a WASH report).
9. P. R. Kasten, L. L. Bennett, and W. E. Thomas, An Evaluation of Plutonium Use in High-Temperature Gas-Cooled Reactors, ORNL-TM-3525 (October 1971).
10. R. H. Rainey, Laboratory Development of a Pressurized Cation Exchange Process for Removing the Daughters of ^{232}U from ^{233}U, ORNL-4731 (December 1972).
11. Environmental Statement: HTGR Fuels Reprocessing Facilities, WASH-1534 (August 1974).

12. Environmental Statement: HTGR Fuel Refabrication Pilot Plant, WASH-1533 (April 1974).

13. J. W. Snider and D. C. Watkin, An Evaluation of HTGR Primary Burning, ORNL-TM-4520 (November 1974).

14. P. A. Haas, HTGR Fuel Reprocessing: A Whole-Block Burner with Recycle of Cooled Gas for Temperature Control, ORNL-TM-4519 (August 1974).

15. R. H. Rainey and J. G. Moore, "Laboratory Development of the Acid Thorex Process for Recovery of Thorium Reactor Fuel," Nucl. Sci. Eng. 10(4), 367 (August 1961).

16. L. Kuchler, L. Schafer, B. Wojtech, "The Thorex Two Stage Process for Reprocessing Thorium Reactor Fuel with High Burnup," Kerntechnik 13, No. 718 (1971).

17. D. T. Pence, F. A. Duce, and W. J. Maeck, "Developments in the Removal of Airborne Iodine Species with Metal-Substituted Zeolites," in Proceedings of the Twelfth AEC Air Cleaning Conference, CONF-720823, Vol. I (January 1973).

18. R. D. Ackley, Removal of Radon-220 from HTGR Fuel Reprocessing and Refabrication Off-Gas Streams by Adsorption (Based on a Literature Survey), ORNL-TM-4883 (April 1975).

19. R. W. Glass et al., HTGR Head-End Processing: A Preliminary Evaluation of Processes for Decontaminating Burner Off-Gas, ORNL-TM-3527 (July 1972).

20. K. J. Notz, A. B. Meservey, and R. D. Ackley, "The Solubility of Krypton and Xenon in Liquid CO_2," ANS 1973 Winter Meeting; published in Transactions ANS 17, 318-19 (November 1973).

21. D. E. Ferguson, P. A. Haas, and R. E. Leuze, "Quantitative Recovery of Krypton from Gas Mixtures Mainly Comprising Carbon Dioxide," U.S. Patent 3,742,720 (July 3, 1973).

22. M. E. Whatley, Calculations on the Performance of the KALC Process ORNL-4859 (April 1973).

23. R. W. Glass, T. M. Gilliam, and V. L. Fowler, An Empirical Model for Calculating Vapor-Liquid Equilibrium and Associated Phase Enthalpy for the CO_2-O_2-Kr-Xe System for Application to the KALC Process, ORNL-TM-4947 (in reproduction).

24. J. C. Mullins, An Equilibrium Stage Model of the KALC Process, ORNL-TM-5099 (in preparation).

25. R. W. Glass, H. W. R. Beaujean, V. L. Fowler, T. M. Gilliam, D. J. Inman, and D. M. Levins, Krypton Absorption in Liquid CO_2 (KALC): Campaign II in the Experimental Engineering Section Off-Gas Decontamination Facility, ORNL-TM-5095, (in reproduction).

26. R. G. Wymer, "Sol-Gel Processes at Oak Ridge National Laboratory: Development, Demonstration and Irradiation Tests," presented at the Panel on Sol-Gel Processes for Fuel Fabrication, held in Vienna, Austria, May 21-24, 1973, by the International Atomic Energy Agency; published in the Proceedings.

27. P. A. Haas, Process Requirements for Preparing ThO_2 Spheres by the ORNL Sol-Gel Process, ORNL-TM-3978 (December 1972).

28. P. A. Haas, HTGR Fuel Development: Use of UO_3 to Load Cation Exchange Resin for Microsphere Preparation, ORNL-TM-3817 (September 1972).

29. Chemical Technology Division Annual Progress Report for Period Ending March 31, 1972, ORNL-4794 (August 1972), pp. 47-49.

30. K. H. Lin, Characteristics of Radioactive Waste Streams Generated In HTGR Fuel Reprocessing, ORNL-TM-5096 (in reproduction).

31. J. E. Lovett, Nuclear Materials: Accountability, Management, Safeguards, American Nuclear Society, Hinsdale, Ill. (1974).

ORNL-TM-4747
UC-77 — Gas-Cooled Reactor Technology

INTERNAL DISTRIBUTION

1. R. D. Ackley
2. M. Bender
3. R. E. Blanco
4. J. O. Blomeke
5. A. L. Boch
6. R. A. Bradley
7. R. E. Brooksbank
8. K. B. Brown
9. W. D. Burch
10. R. M. Canon
11. W. L. Carter
12. J. M. Chandler
13. J. H. Coobs
14. A. G. Croff
15. F. L. Culler
16. F. C. Davis
17. W. Davis, Jr.
18. F. E. Dearing
19. J. P. Drago
20. D. E. Ferguson
21. B. C. Finney
22. C. L. Fitzgerald
23. C. W. Forsberg
24. T. M. Gilliam
25. R. W. Glass
26. W. S. Groenier
27. P. A. Haas
28. F. E. Harrington
29. C. C. Haws
30. J. W. Hill
31. F. J. Homan
32. S. V. Kaye
33–36. P. R. Kasten
37. C. W. Kee
38. R. K. Kibbe, GAC/ORNL
39. W. J. Lackey
40. K. H. Lin
41. T. B. Lindemer
42. E. L. Long, Jr.
43. A. L. Lotts
44. R. S. Lowrie
45. A. P. Malinauskas
46. E. E. McCombs
47–62. K. J. Notz
63. A. R. Olsen
64. W. H. Pechin
65. H. Postma
66. R. H. Rainey
67. J. W. Roddy
68. A. D. Ryon
69. C. D. Scott
70. J. D. Sease
71. J. H. Shaffer
72. J. W. Snider
73. D. B. Trauger
74. V. C. A. Vaughen
75. J. E. Van Cleve
76. D. C. Watkin
77–81. R. G. Wymer
82–83. Central Research Library
84. Document Reference Section
85–87. Laboratory Records
88. Laboratory Records (RC)
89. ORNL Patent Section

CONSULTANTS

90. W. K. Davis
91. J. C. Frye
92. C. H. Ice
93. J. J. Katz
94. R. B. Richards

EXTERNAL DISTRIBUTION

95. Research and Technical Support Division, ERDA, ORO
96. Director, Reactor Division, ERDA, ORO
97-98. Director, Reactor Research and Development, ERDA, Washington, D.C. 20545
99-100. Director, Division of Nuclear Fuel Cycle and Production, ERDA, Washington, D.C. 20545
101-262. Given distribution as shown in TID-4500 under Gas-Cooled Reactor Technology category
263-300 U.S./German HTR Research Exchange Agreement (TIC to distribute)