ORNL/TM-5125

Cy 90

OAK RIDGE NATIONAL LABORATORY LIBRARIES

3 4456 0550872 3

Development of a Procedure for Evaluating the Economics of Process Options in Commercial HTGR Fuel Recycle

W. E. Thomas

OAK RIDGE NATIONAL LABORATORY
CENTRAL RESEARCH LIBRARY
DOCUMENT COLLECTION
LIBRARY LOAN COPY
DO NOT TRANSFER TO ANOTHER PERSON
If you wish someone else to see this document, send in name with document and the library will arrange a loan.

UCN-7969
(3 3-67)

OAK RIDGE NATIONAL LABORATORY
OPERATED BY UNION CARBIDE CORPORATION FOR THE ENERGY RESEARCH AND DEVELOPMENT ADMINISTRATION

Printed in the United States of America. Available from
National Technical Information Service
U.S. Department of Commerce
5285 Port Royal Road, Springfield, Virginia 22161
Price: Printed Copy $5.50; Microfiche $2.25

This report was prepared as an account of work sponsored by the United States Government. Neither the United States nor the Energy Research and Development Administration, nor any of their employees, nor any of their contractors, subcontractors, or their employees, makes any warranty, express or implied, or assumes any legal liability or responsibility for the accuracy, completeness or usefulness of any information, apparatus, product or process disclosed, or represents that its use would not infringe privately owned rights.

ORNL/TM-5125

UC-77 — Gas-Cooled Reactor Technology

Contract No. W-7405-eng-26

Reactor Division

DEVELOPMENT OF A PROCEDURE FOR EVALUATING THE ECONOMICS OF PROCESS OPTIONS IN COMMERCIAL HTGR FUEL RECYCLE

W. E. Thomas

MAY 1976

NOTICE: This document contains information of a preliminary nature and was prepared primarily for internal use at the Oak Ridge National Laboratory. It is subject to revision or correction and therefore does not represent a final report.

OAK RIDGE NATIONAL LABORATORY
Oak Ridge, Tennessee 37830
operated by
UNION CARBIDE CORPORATION
for the
ENERGY RESEARCH AND DEVELOPMENT ADMINISTRATION

OAK RIDGE NATIONAL LABORATORY LIBRARIES
3 4456 0550872 3

CONTENTS

Page

ACKNOWLEDGMENTS v

ABSTRACT 1

INTRODUCTION 1

DESCRIPTION OF HTGR FUEL AND FUEL MANAGEMENT 4

Reference Fuel Management 4
Fuel Management Prior to Availability of Reprocessing 5
Time Allowed for Fabrication, Reprocessing and Refabrication 6
Estimating Fabrication, Chemical Reprocessing, and Refabrication Requirements 8
Transitions from Nonrecycle to Recycle Mode 12

PROCESS THROUGHPUTS 15

Chemical Reprocessing 16
Refabrication 23
Scrap Management 26
Fresh Fuel Fabrication 30

Initial (first) core fabrication 31
Heavy metal discharged from first core element 32

COST CALCULATIONS 34

Equipment Costs 34
Plant Expansion 38
Hardware Costs 39
Uranium Costs 41

Unit cost for enriched uranium 44

Thorium Costs 46

SPENT FUEL ELEMENT HEAT SOURCE 46

WORK REMAINING TO BE DONE 47

CODE INPUT INSTRUCTIONS 48

APPENDIX A. SCRAP RECOVERY MODELS FOR FABRICATION AND REFABRICATION PLANTS 63

APPENDIX B. SAMPLE OUTPUT 79

REFERENCES 106

ACKNOWLEDGMENTS

The author wishes to acknowledge the contribution by others for their advice, comments and guidance relating to this work. The author is indeed grateful to M. L. Tobias for suggesting this report, for his comments during the programming phase, and for his help and that of L. L. Bennett in reviewing this report. The advice and information contributed by M. L. Myers relating to costs and cost estimating have been extremely helpful. Comments and suggestions offered by F. J. Homan, J. D. Jenkins, J. D. Sease, and J. W. Snider during the planning stage of this work are greatly appreciated. Appreciation is also expressed to M. H. Wilson for report preparation and to Frances Burkhalter for preparing the figures.

DEVELOPMENT OF A PROCEDURE FOR EVALUATING THE ECONOMICS OF PROCESS OPTIONS IN COMMERCIAL HTGR FUEL RECYCLE

W. E. Thomas

ABSTRACT

This report describes the status of and calculational procedures used in a machine code being developed for calculating costs of fresh fuel fabrication, chemical reprocessing, and refabrication of HTGR fuel. In its present state of development, the capability is confined principally to calculating annual mainstream and scrap recovery process throughputs in fresh fuel fabrication, chemical reprocessing, and refabrication. The code works from user-supplied reactor build schedules and fuel specifications to approximate changing fuel fabrication requirements over a 20-year (maximum) projection. The availability of a reprocessing facility may be delayed to some specified date beyond the first year of a projection. Some of the cost routines have also been programmed and are described in the report.

Key words: HTGR, fuels, fabrication, reprocessing, plants, costs.

INTRODUCTION

The purpose of this report is to describe the status of development of a procedure (machine code) being developed to calculate fresh fuel fabrication costs, chemical reprocessing costs, and refabrication costs for high-temperature gas-cooled reactor (HTGR) fuel.

Figure 1 shows the overall plan to be followed by the code, when completed, in arriving at these costs. At present, the code is functional primarily in calculating plant and process throughput requirements in a growing HTGR economy; that is, approximately the upper half of Fig. 1. In preparing the reactor information, a user may classify all HTGRs into one of four different "types", and for each "type" may specify any desired number of reactors to be "built" each year. This method allows differentiation of HTGRs according to size, fuel residence time, fuel specifications, loadings, etc.

ORNL–DWG 75–15701

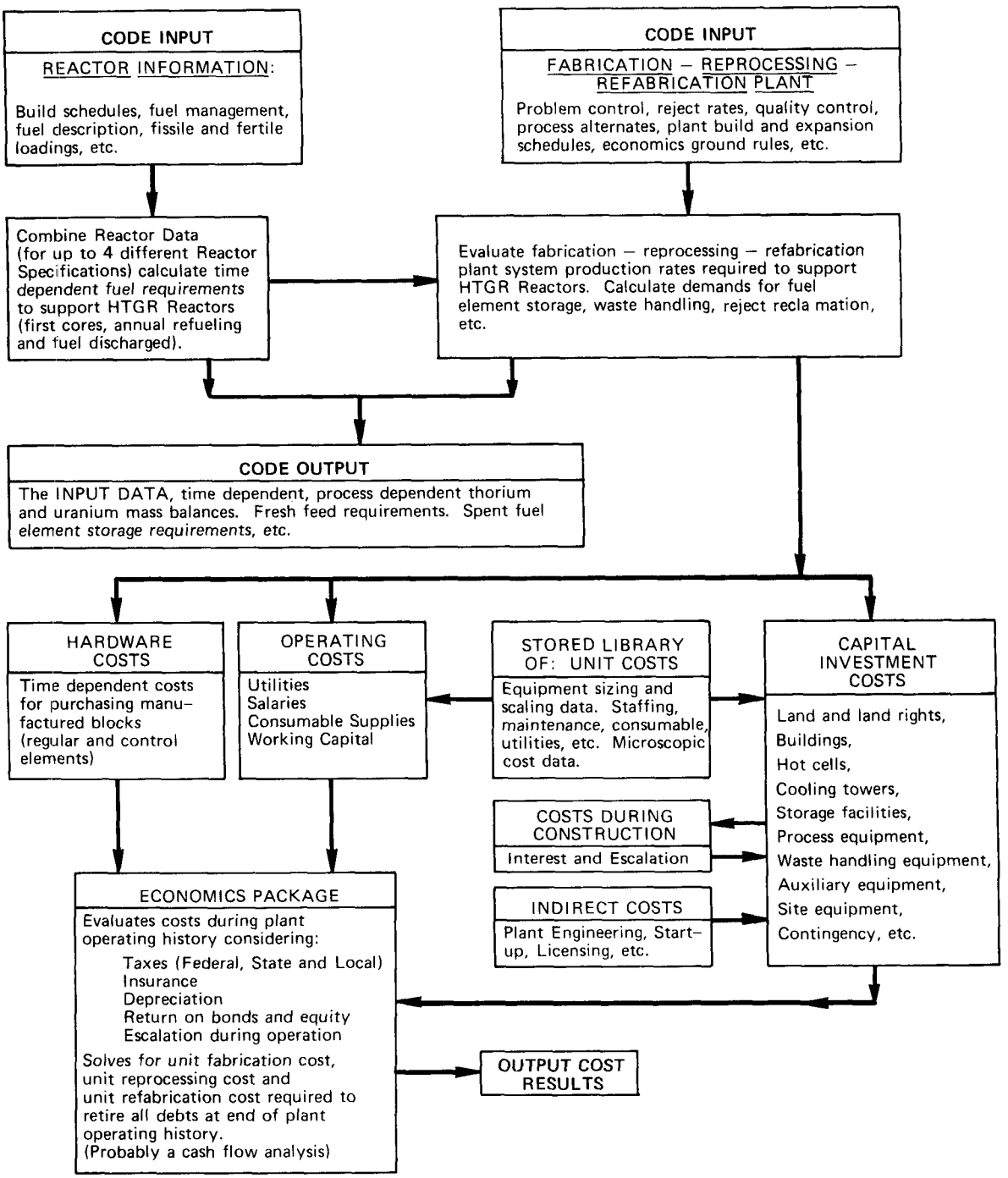

Fig. 1. Outline of code logic.

The code computes amount of fuel (uranium and thorium) charged to and discharged from all reactors of a particular "type" throughout the 20-year (maximum) history. The code also keeps books on fuel elements (both control fuel elements and regular elements) for use in computing hardware costs. Total fabrication, reprocessing and refabrication requirements are the sum over all reactor "types". A user may also delay availability of the reprocessing facility; the operational date is user specified.

Fresh fuel fabrication, chemical reprocessing and refabrication are each subdivided into major processes; for example, fuel element assembly, fuel rod manufacture, etc., in fabrication and refabrication. The code computes annual process throughputs considering user-specified information for reject fractions, waste fractions and other auxiliary information relating to scrap recovery. The code also depends on user-supplied information for fissile particle and fertile particle specifications. For example, coating throughputs are calculated for both BISO and TRISO, as well as gross heavy metal content in fissile and fertile particles. Coating specifications are also referred to in chemical processing being used, for example, in calculating secondary burner throughput. The above discussion is a very brief treatment of the process throughput calculation which is described in detail in the report.

After calculating annual throughputs in each major process of the fabrication plant, the chemical reprocessing plant and the refabrication plant, then these throughputs must each be translated into units of equipment requirements, space requirements and costs. Details of the method used is described in the section on equipment costs. The principal area of work remaining to be done is in preparing equipment unit cost data from information in conceptual design reports and associated detail cost estimates; that is, the code looks for unit costs for major equipment items (furnaces, crushers, dissolvers, etc.) and not the cost for each piece of pipe, valve, microswitch, etc., used in fabricating that item. Use of multiple identical equipment items is the method used in scaling equipment to meet required throughputs. The assumption has also been made that these plants will not necessarily be expanded on a continuous year-to-year basis to keep pace with increased throughputs in a growing economy. Plant expansion schedules are specified by the user with equipment being sized for maximum throughput between expansion dates.

DESCRIPTION OF HTGR FUEL AND FUEL MANAGEMENT

Detailed descriptions of HTGR fuel are given in several references[1–3] and will not be repeated in detail here. Briefly, HTGRs are graphite moderated reactors; the principal makeup fuel is uranium enriched to 93.15% ^{235}U, and the dominant fertile material is thorium. Both the uranium and thorium are in the form of either oxides or carbides which are formed into small microspheres called kernels, typically 200 μ to 500 μ in diameter. These kernels are coated with layers of carbon, or with layers of carbon and a layer of SiC. The principal function of these coatings is to retain fission products and keep the reactor coolant (helium) reasonably free of radionuclides. Coated particles fabricated with uranium are called fissile particles, and coated particles whose kernels contain only thorium are called fertile particles. Several alternate[4] fissile and fertile particles have been proposed and tested for use in HTGRs.

Fissile and fertile particles are blended, bonded together with pitch as a matrix material, and molded to form short rods about 2 in. long. Inert carbon particles called shim or fill particles may also be used in rod manufacture, as required, for the purpose of filling in voids. These rods are then inserted into holes (1/2 in. or 5/8 in. diam) drilled in 31.2-in.-long hexagonal graphite blocks, 14.17-in. across flats, to complete a fuel element assembly.

Reference Fuel Management

Present plans are for HTGRs to start up on 93.15% enriched uranium and thorium. The fuel elements fabricated for this first loading are called initial (or first core) elements and are fabricated in a fresh fuel plant. During operation in the reactor, uranium (called bred uranium) is produced from thorium by nuclear reactions. The isotopic composition of bred uranium is mainly isotope ^{233}U, together with various amounts of isotopes ^{234}U, ^{235}U and a small amount of ^{236}U also being produced in the reaction chain. In an HTGR neutron energy spectrum, bred uranium is usually a somewhat superior fuel compared with enriched uranium, that is, produces more fast neutrons per neutron absorbed in uranium. Hence, it is desirable to recycle the bred uranium back to the reactor at some future date.

The enriched uranium in the fissile particles of the first core elements depletes in ^{235}U content and builds up considerably in ^{236}U content during in-core residence. The ^{236}U is predominantly a neutron absorber (poison). Since ^{236}U cannot be separated out chemically, it limits any advantages in recycling this spent makeup uranium throughout the reactor operating history. Present HTGR fuel management specifies that spent makeup uranium reclaimed in chemical reprocessing will be refabricated (in so-called 25R elements) and returned to the reactor for one additional fuel cycle. That is, enriched uranium will reside in reactor a maximum of two cycles and will then be discarded. The bred uranium extracted from the fertile particles will be refabricated into fissile particles and assembled into 23R elements for recycle to the reactor. Subsequent reprocessing will reclaim all bred uranium from the fissile particles in the 23R elements as well as from all fertile particles for refabrication and recycle.

The conversion ratio, defined as fissile atoms produced per fissile atom destroyed, in HTGRs is considerably less than unity, typically 0.65 to 0.7. This means that at each refueling some makeup uranium (fresh enriched uranium) will be required in addition to the reclaimed and recycled uranium. These makeup elements will be fabricated in a fresh fuel plant.

Fuel Management Prior to Availability of Reprocessing

The above discussion has assumed reprocessing and refabrication to be available. In reality, these facilities may not be operational for several years following startup of the first HTGR. From the time an HTGR goes on line until reprocessing becomes available, the reactor will be operating nonrecycle; i.e., at each refueling, only elements containing fresh enriched uranium will be loaded, and all spent elements removed will accumulate in storage. During this transition period, the quantity of uranium which will have accumulated for reprocessing (once reprocessing begins) will depend on the number of HTGRs built, the physical size of each reactor, and how long each has been operating relative to the date at which a reprocessing facility becomes available.

Time Allowed for Fabrication, Reprocessing and Refabrication

Assume that a reprocessing plant is in operation and that each HTGR started up can operate in reference recycle mode throughout its operating history. The time frame for fabrication, reprocessing and refabrication relative to the power producing period for a single reactor is shown schematically on Fig. 2. We begin the discussion with first cycle operation and fabrication of fuel for the first reload. Initial or first core fabrication is discussed in a later section. We assume that the HTGR will recycle its own bred uranium; thus, there will be no recycled elements loaded at the first refueling. Sometime concurrently with first cycle operation, fresh makeup fuel elements must be fabricated and shipped to the reactor site in time for the first refueling.

During refueling, approximately one-fourth of the core (one-sixth core in Fort St. Vrain) is removed and replaced with the fresh fuel elements. Spent elements removed are transferred initially to an on-site fuel storage facility. It is not certain how long spent fuel elements might remain in storage, somewhere, even though the reprocessing facility were available. We assume that spent fuel will be reprocessed and refabricated for reloading as quickly as practical. This assumption implies that the earliest date for reloading recycled uranium would be at the beginning of the third reactor cycle, if each reactor recycles its own fuel. Spent fuel elements will probably remain at the reactor site for some period of time to allow fission products to decay. On-site cooling reduces the heat removal requirements during transportation. For example, power generation due to beta and gamma rays after 30 days cooling would be $\sim$0.2% of the fuel element power level during irradiation and would reduce to $\sim$0.08% (of fuel element power during irradiation) if decayed 150 days.

After the decay (cooling) period, the spent elements are shipped to the chemical reprocessing site. Fuel element shipment could be postulated as: (a) rail or barge shipment of an entire reload segment, or (b) several shipments, each some fraction of one reload segment with the total shipping time extending over a few weeks.

Concurrently with the second cycle of reactor operation, spent fuel elements must be reprocessed to reclaim the bred uranium and, if specified,

ORNL–DWG 75–15702

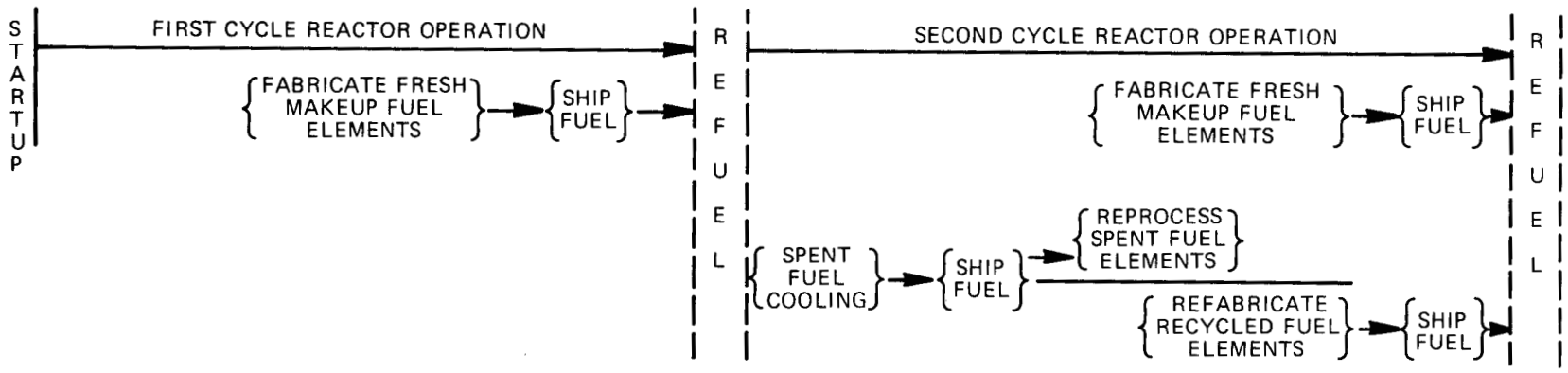

Fig. 2. Timing fabrication, reprocessing and refabrication relative to reactor operation (schematic).

the spent makeup uranium also. The bred uranium must be refabricated into the 23R elements and the spent makeup uranium refabricated into the 25R elements, and all elements shipped back to the reactor in time for the next (second) refueling. Some fresh makeup fuel elements must also be fabricated (in the fresh fuel plant) and shipped to the reactor for this refueling as shown in Fig. 2. The sequence of events described above during the second cycle reactor operation is repeated during each successive cycle throughout the reactor operating history.

Estimating Fabrication, Chemical Reprocessing, and Refabrication Requirements

The fresh fuel fabrication plant, the chemical reprocessing plant, and the refabrication plant should serve several HTGRs. At present, it is difficult to estimate with any degree of accuracy the actual number of HTGRs expected to startup in a given future year. Figure 3 illustrates one assumed reactor build schedule. Four "types" of HTGRs are illustrated in the key; the number of reactors "built" each year and the cumulative number of reactors on-line are shown in this figure. Reactor build schedules are code input information and can be controlled by the user.

With the exception of Fort St. Vrain, which has been loaded with fuel and is approaching power operation, all of the reactors shown in Fig. 3 were determined from forecasts of HTGR capacity growth in the nuclear economy and known commitments during the second quarter of 1975. One source of HTGR future capacity additions has been the various publications[5,6] prepared by the ERDA Office of Planning Analysis.

For the purpose of calculating fabrication plant throughput and reprocessing-refabrication plant throughputs for use in costing these plants, simple models have been used. Process dependent throughput in fresh fuel fabrication, chemical reprocessing and refabrication are calculated on an annual basis.

Except as described below, all HTGRs are assumed to be on an annual refueling cycle. As presently programmed, the code does not allow the user to specify definite calendar dates for shutting down each reactor during each year.

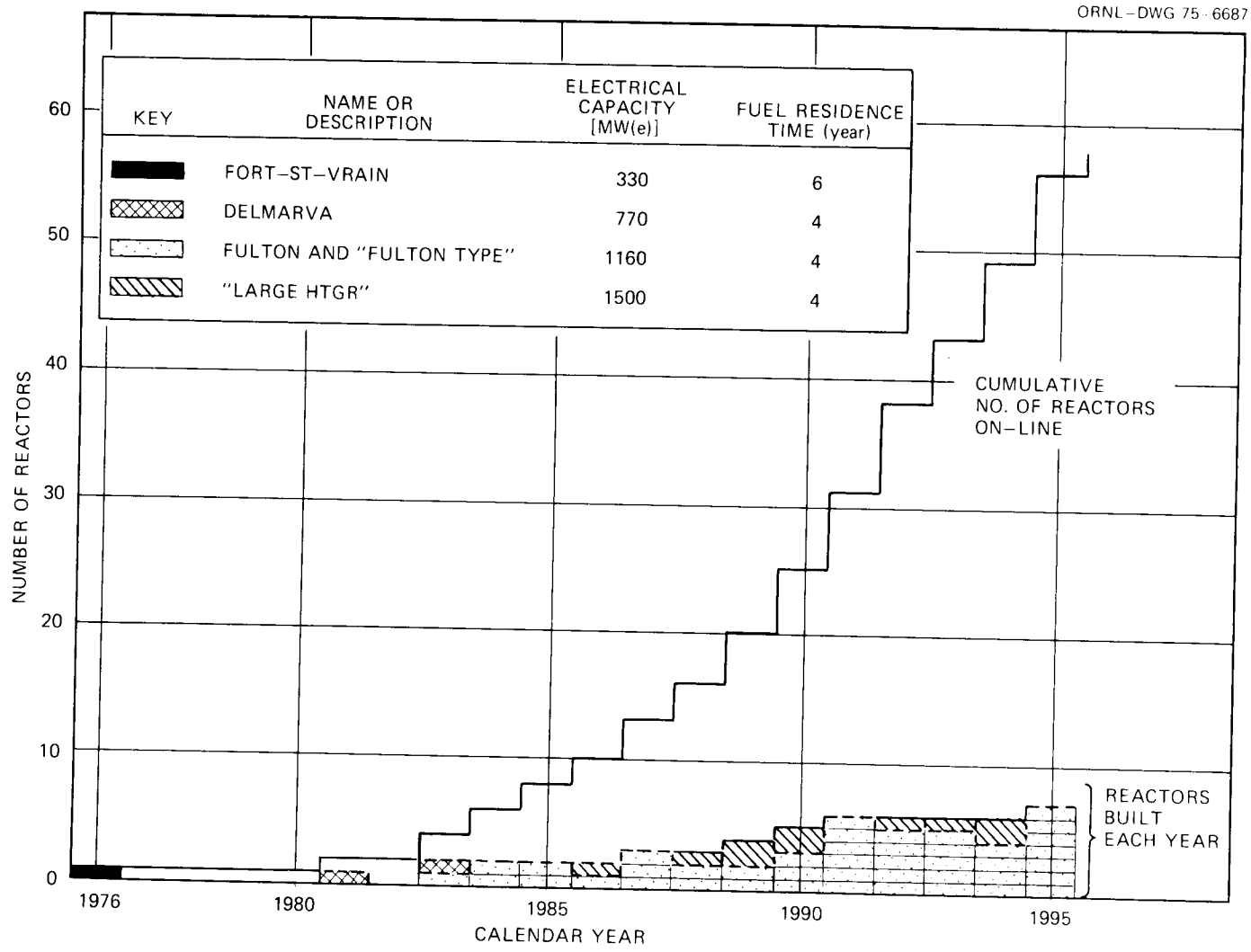

Fig. 3. HTGR build schedule.

Probably most HTGRs will experience a somewhat longer (than one year) first cycle operation due to routine shakedown operation, personnel training, technical difficulties, scheduled low-power testing, etc.; a user may artifically increase the reactor first cycle calendar operating time to simulate approach to full-power operation.

In a typical growth period of 20 years, most of the HTGRs "started up" according to some assumed build schedule (e.g., Fig. 3) will probably begin operation late in the history of a calculation. Therefore, drop-off in capacity factor with age (say after 10 to 15 years reactor operation) can probably be assumed to have negligible effect on the gross fabrication and reprocessing-refabrication requirements.

The code assumes that fresh fuel fabrication, chemical reprocessing and refabrication of fuel elements for an entire reload segment will occur during a discrete calendar year as opposed to attempting to split a reload segment between two adjacent years. The reason for this assumption can be explained in the following example. Figure 4 is a schematic representation of the information in Fig. 2, but for several reactors "beginning operation" at various times during a calendar year. For each reactor, the top two connected solid arrows represent time frames for the first and second cycle operation. First cycle operation was assumed to be two calendar years, second and subsequent cycle operatimg time is one calendar year. The small solid arrows, immediately below, represent the time for fresh fuel fabrication and delivery, assumed to span approximately three months just prior to each refueling. In the discussions which follow, imagine that the arrows in each cluster for each "reactor" maintain their same length and relative positions, but can be shifted right or left as a group to represent other "insertion dates" or additional "reactors" on line during a given calendar year. If we allowed one month for shipping, then examination of Fig. 4 would indicate that most reactors (∿87.5%) "started up" in year N will require fresh fuel fabrication for first refueling to be completed in year N+2, and fresh fuel fabrication for each subsequent refueling to be completed at one year increments thereafter.

The arrows in Fig. 4 shown with broken lines represent the total time allowed for unloading spent fuel, on-site cooling, shipping, reprocessing,

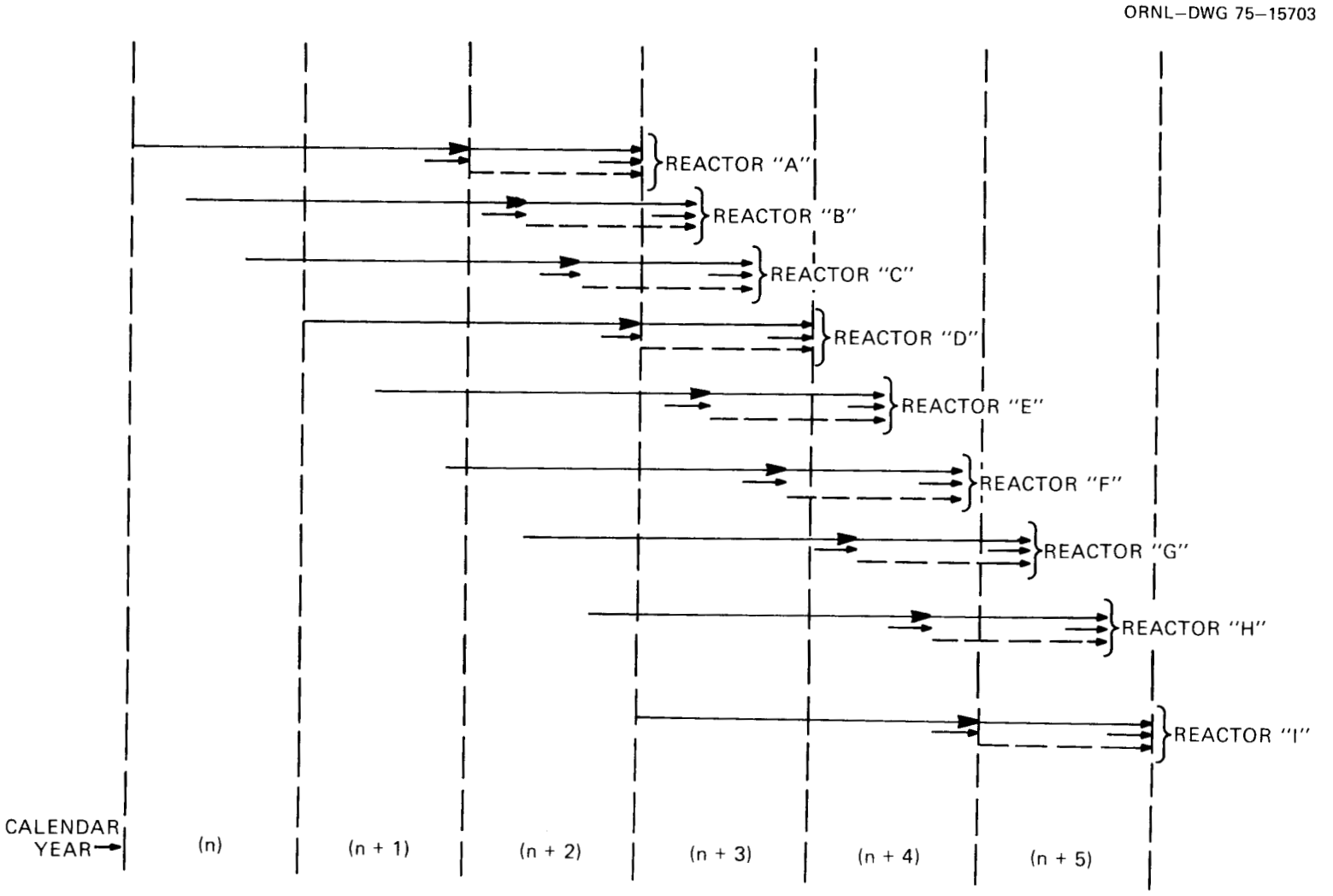

Fig. 4. Combining reactors.

refabrication and return shipping of the recycle fuel elements. Unloading (∿1/2 month), cooling (∿4 months), and rail shipment (∿1 month) imply that reprocessing could not begin before approximately six months or one-half cycle after reactor shutdown.

All things considered, it appears rational to assume that fresh fuel fabrication and the majority of chemical reprocessing and refabrication will occur in time toward the end of each reactor cycle. Lumping fresh fuel fabrication, chemical reprocessing and refabrication into discrete calendar years should be well within the accuracy of predicting actual HTGR startup dates.

Transitions from Nonrecycle to Recycle Mode

In the discussion thus far, we have considered fuel management of an individual reactor and how fuel fabrication, chemical reprocessing and refabrication must be timed relative to reactor operation in order to keep those reactors in service. We have indicated that reprocessing facilities may not be available until some time after startup of some of the earlier reactors. Also, we assume that these will not be on-site fuel fabrication, fuel reprocessing and refabrication for individual reactors, but that fuel requirements for several HTGRs will be served by central fabrication plant(s) and central reprocessing-refabrication plant(s). These plants are also assumed to serve only HTGR reactors. We also require that the calculational procedure must expect additional new reactors to be coming "on-line" according to some assumed preplanned schedule.

It may be helpful at this time to illustrate time-dependent trends in fresh fuel fabrication, chemical reprocessing and refabrication requirements imposed on these plants by HTGRs added to the power economy, according to a build schedule such as shown in Fig. 3. These results, shown in Figs. 5 and 6, are for illustrative purposes only. Plotted on each figure is total heavy metal (thorium plus uranium) versus calendar date. The year 1988 was arbitrarily selected as the date at which chemical reprocessing became available; this specification is under user control. Prior to this date (1988), all reactors were on nonrecycle operation. The buildup of heavy metal discharged from all reactors during this period is shown in

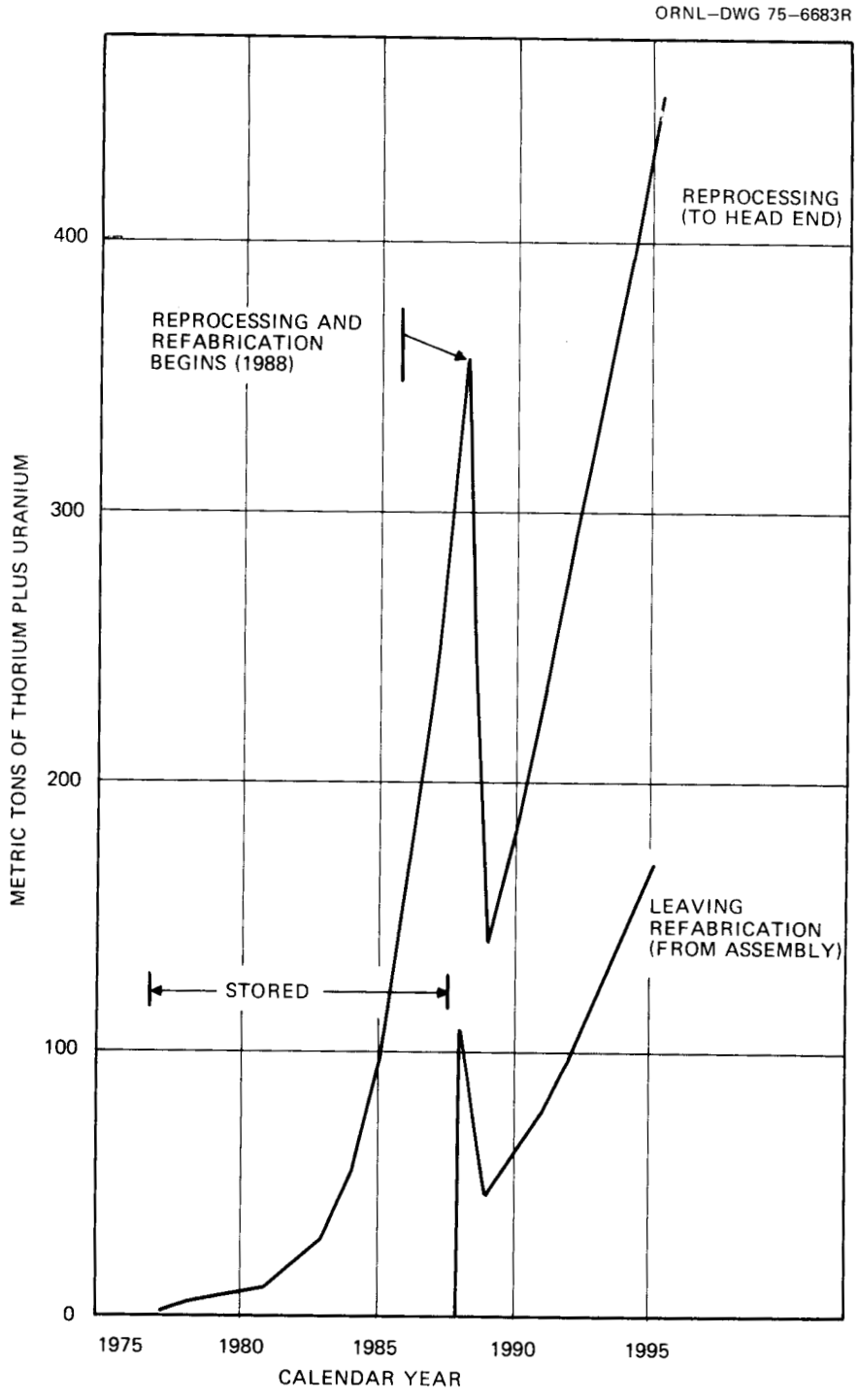

Fig. 5. Heavy metal accumulated in storage, to reprocessing, and refabricated.

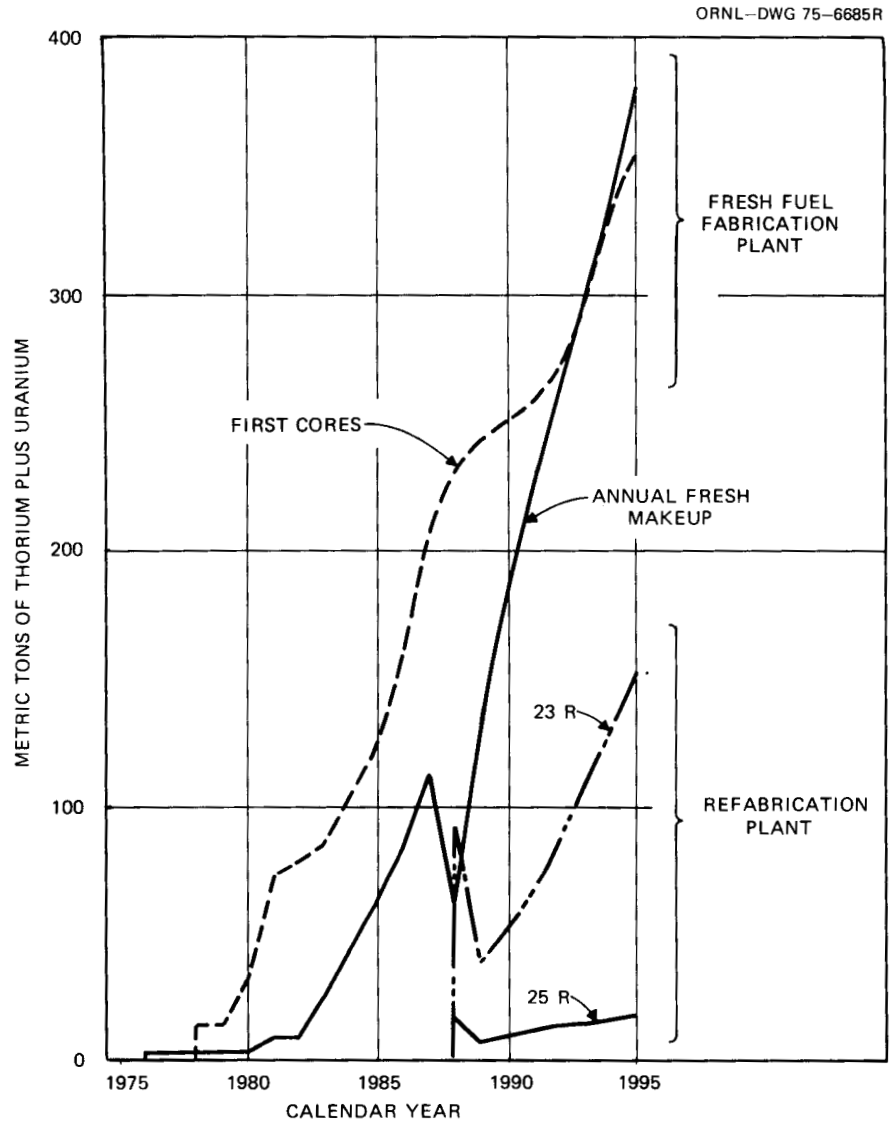

Fig. 6. Heavy metal output from fabrication and refabrication.

Fig. 5. The code assumes that once reprocessing begins, all accumulated heavy metal in storage will be processed during that first year. Figure 5 also shows the amount of heavy metal (fresh thorium plus recycled uranium) leaving the refabrication plant in recycled fuel elements. The upward trend on both curves after 1989 reflects the growth in HTGR capacity assumed during that period.

Total heavy metal output from the refabrication plant shown in Fig. 6 is the same as in Fig. 5, but displayed according to content in 23R elements and 25R elements. Again, heavy-metal content in each element type is fresh thorium plus the recycle uranium. Total heavy metal (fresh thorium plus enriched uranium) loaded into initial or first core elements and in annual fresh makeup elements, is also shown in Fig. 6. These elements are fabricated in a fresh fuel fabrication plant. Prior to availability of a reprocessing facility, all elements loaded into the reactors were fabricated in the fresh fuel plant. At the beginning of the case history (1976) only one reactor, Fort St. Vrain, was assumed to be in operation and requiring makeup fuel; first core fabrication had already been completed. The second reactor was assumed on-line in 1981. First core fabrication for this reactor was assumed to begin 3 years prior and was spread over years 1978 and 1979. The options available for timing and distributing first core fabrication are discussed later in the section on first core fabrication. Once recycled fuel becomes available (assumed here to be 1988), the amount of heavy metal fabricated into fresh makeup elements decreases. Recycling fuel in an individual reactor decreases the amount of fresh makeup fuel required for that reactor; but as more reactors are brought on-line, the total amount of heavy metal annually fabricated into fresh elements for all reactors may increase as shown in Fig. 6.

PROCESS THROUGHPUTS

In each plant, equipment has been grouped into that associated with the various processes. For each process, there is calculated the amount of heavy metal (thorium and uranium) entering the process, leaving the process and diverted from the process to waste and/or reject reclamation

as applicable. The throughput calculation considers coating specifications and whether or not fissile kernels were fabricated with mixture of thorium and uranium. Throughputs are calculated in units of total annual kilograms. These annual throughputs are then used in estimating the number of units of equipment required and costs as described later in the section on equipment costs. Process throughputs in chemical reprocessing, refabrication, fresh fuel fabrication, and scrap recovery are discussed separately below.

Chemical Reprocessing

The purpose of reprocessing is to (a) reclaim the bred uranium for subsequent refabrication into 23R elements for reuse in reactor, and (b) to reclaim the once-burned spent makeup uranium for refabrication in 25R elements. The 25R elements reside in core for one cycle, after which the depleted uranium is to be separated and stored. Fission products (F.P.) and the transuranium nuclides (TU), which are principally ^{237}Np isotopes of plutonium and small amounts of higher atomic number elements, must also be removed and processed for safe disposal. Spent thorium containing small amounts of isotope ^{228}Th (plus very small amounts of ^{229}Th and ^{230}Th) is assumed to be held in storage for possible future reuse.

The uranium is reclaimed by combination of physical separation (fissile particles from fertile particles) in the head-end processes and by chemical separation in the solvent extraction process. Figure 7a is a schematic representation of ideal uranium recovery for HTGRs operating reference recycle. The blocks at the extreme left represent the three fuel-element types, and the fissile particle content and fertile particle content of each when initially loaded in the reactor. The initial and makeup (IM) elements contain fresh enriched uranium (FU) in the fissile particles and fresh thorium (Th) in the fertile particles. After exposure in the reactor, the enriched uranium in IM elements has depleted in ^{235}U content and is then called spent makeup uranium (SU). The fertile particles will contain somewhat less thorium (Th') with the majority of this thorium deficit having been transmuted to bred uranium (BU). Although not shown on the figure, fission products (F.P.) and some TU will also be present within the particles after exposure. Head-end reprocessing receives the spent

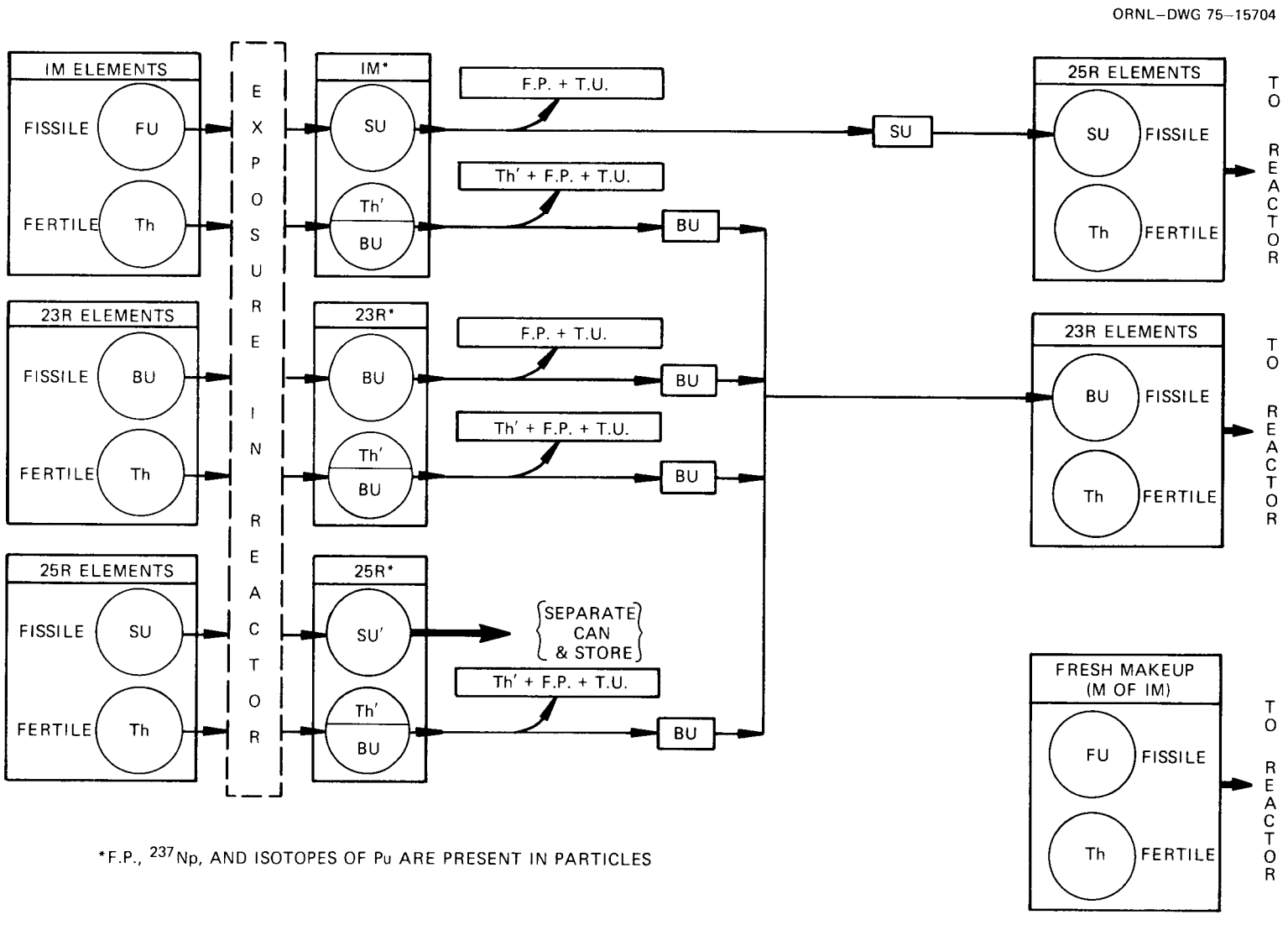

Fig. 7a. HTGRs without mixed fissile kernels.

fuel elements. Head-end processing is essentially a two-step operation: 1) to crush the spent fuel elements into small pieces, and 2) to burn away the graphite moderator in a fluidized-bed burner. An alternate process[7] using a whole block burner has also been proposed for head-end treatment. If we assume that particle design (particle size, weight and coating specifications) is such that the fissile particles can be separated from the fertile particles in a gas classifier after burning, the BU and SU can enter separate streams as shown in Fig. 7a.

When reprocessing begins initially, IM elements are the only source of bred uranium for refabrication into 23R elements (right side of Fig. 7a). After the 23R elements and 25R elements have resided in the reactor one fuel lifetime, which may be either ∿4 or ∿6 calendar years, then these elements also become available for reprocessing and contribute to the source of BU. The residual spent makeup uranium (SU') in the fissile particles of the 25R elements is not recycled. The block in the lower right of Fig. 7a indicates that fresh makeup elements, fabricated in fresh fuel plant, contain enriched uranium in fissile particles and fresh thorium in the fertile particles, i.e., same as initial core elements.

If the fissile particles in the IM elements are mixtures of thorium and enriched uranium, such as specified for the first core in Fort St. Vrain reactor, then some bred uranium will be carried along with the SU and refabricated into the 25R elements as shown in Fig. 7b. The assumption is also made that the three-fuel-type reactor is preserved, and that fissile and fertile particles are physically separable. Note that some of the BU will be retired with the SU' when the 25R elements are reprocessed. Although not shown in Fig. 7b, if we postulate that nonsegregated fuel (mixtures of thorium and uranium in kernels) is specified for each refabricated element, then (a) more bred uranium, that produced from the assumed thorium content in the fissile particle of the 25R elements, will be retired; and (b) spent thorium (Th') will have to be chemically separated from uranium in each particle type contributing to the recycle streams.

Full recycle of all uranium might be an alternate or possibly preferred fuel management for those reactors using nonsegregated (mixed

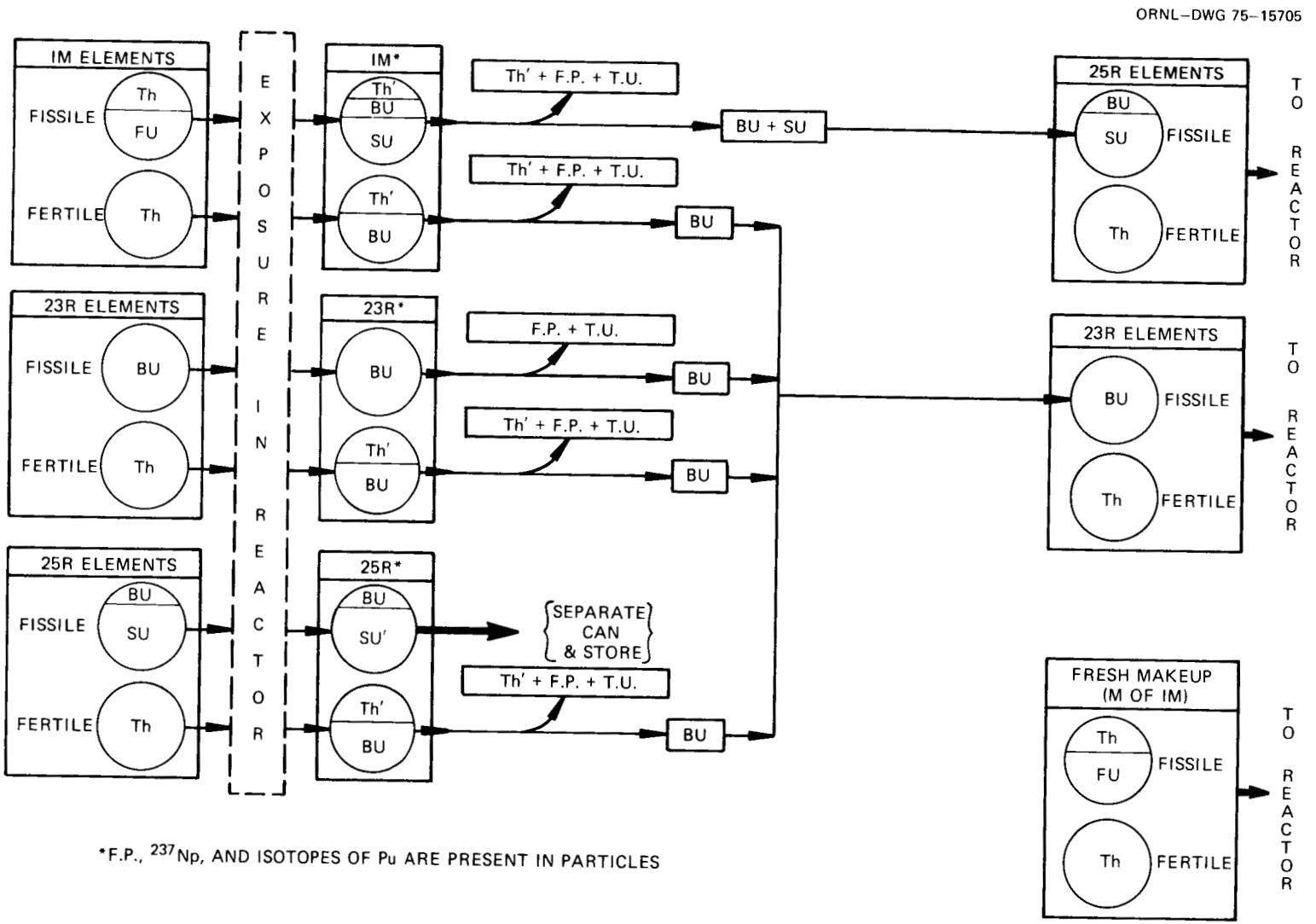

Fig. 7b. HTGRs with mixed fissile kernels.

kernels) fuel. Full recycle has the disadvantage that ^{236}U (a neutron poison) builds up to a greater extent over reactor lifetime, i.e., the recycled spent makeup uranium, high in ^{236}U content, is not being periodically removed from the system. However, there would be no bred uranium removed to storage as shown in Fig. 7b. If we assume that only one recycle ("R") element would be refabricated, then reprocessing requirements might be as shown in Fig. 7c for the full recycle case. We can see from Fig. 7c that there would be no reason for physically separating fissile particles from fertile particles unless (a) one particle were TRISO coated and the other particle BISO coated; TRISO coated particles require removal of SiC coating followed by secondary burning prior to dissolving, or (b) the fissile particle in the "R" elements did not contain thorium. We assume throughout this discussion that spent thorium (Th') will always have to be chemically separated from uranium prior to refabrication.

One other variation in fuel management might be considered. Should the cost for reprocessing and refabricating 25R fuel elements exceed any savings in fresh fuel purchases, then it might be decided not to recycle the spent makeup uranium, Fig. 7a. This would imply that the fissile particles in the IM elements would be physically separated from the fertile particles, canned and stored. No 25R elements would then appear in Fig. 7a.

From the discussions so far, it should be evident that reprocessing may vary somewhat depending on fuel specification and reactor fuel management. For the purpose of calculating heavy metal throughputs in reprocessing, equipment was assumed to be grouped as shown in the block diagram of Fig. 8. Fuel elements leaving storage enter the crushers where the fuel elements are broken into small pieces for introduction into the primary burners. To account for waste losses from the crushing operation, the user supplies a waste fraction which is applied separately to thorium, bred uranium, and spent makeup uranium. All waste fractions are specified according to reactor "type" and hence up to four different sets of waste fractions may be used in a calculation.

In the primary burners, the graphite is burned away exposing the silicon-carbide coating (if the particle were TRISO coated) or the particle is burned down to an oxide kernel, or the heavy metal remains in the ash

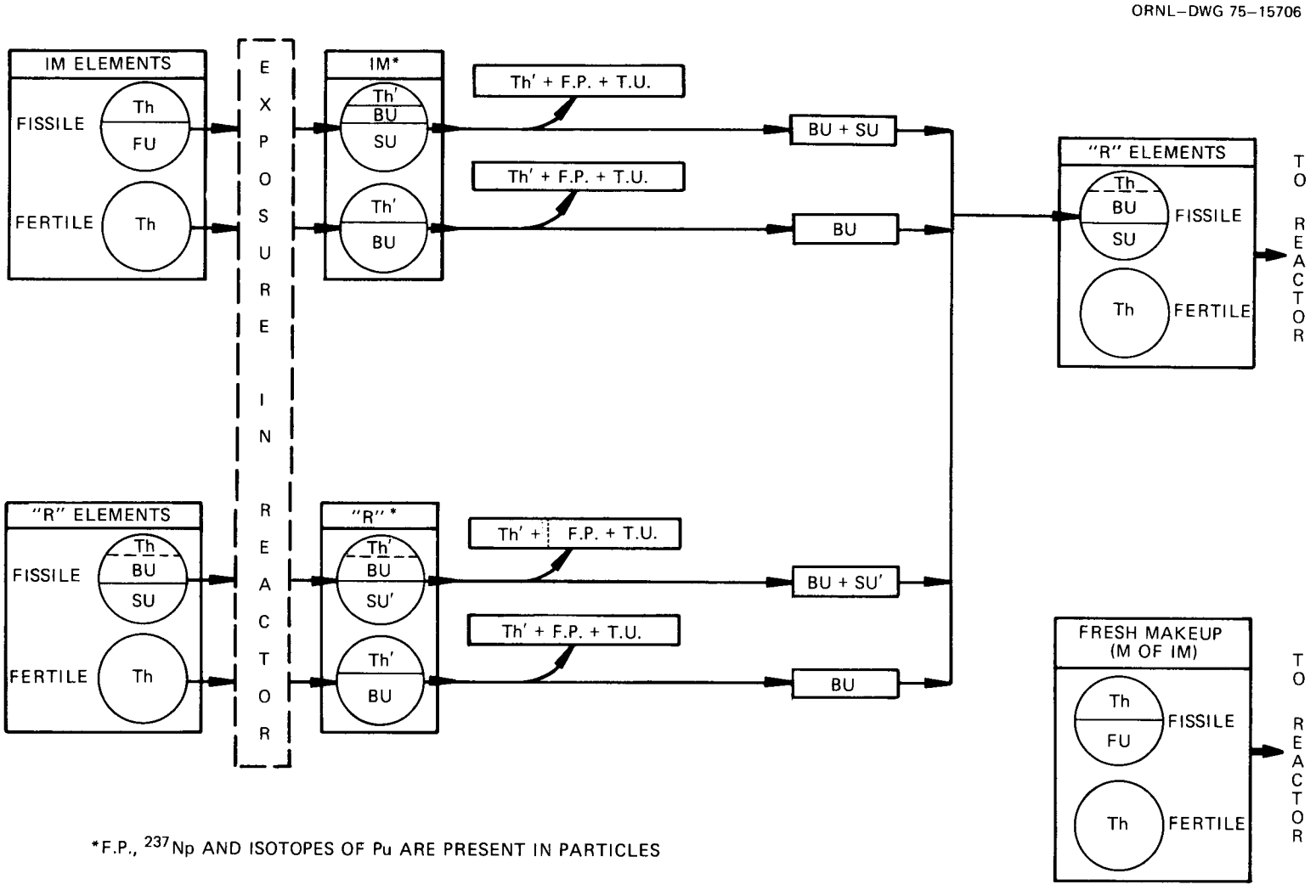

Fig. 7c. HTGRs with mixed fissile kernels operating full recycle.

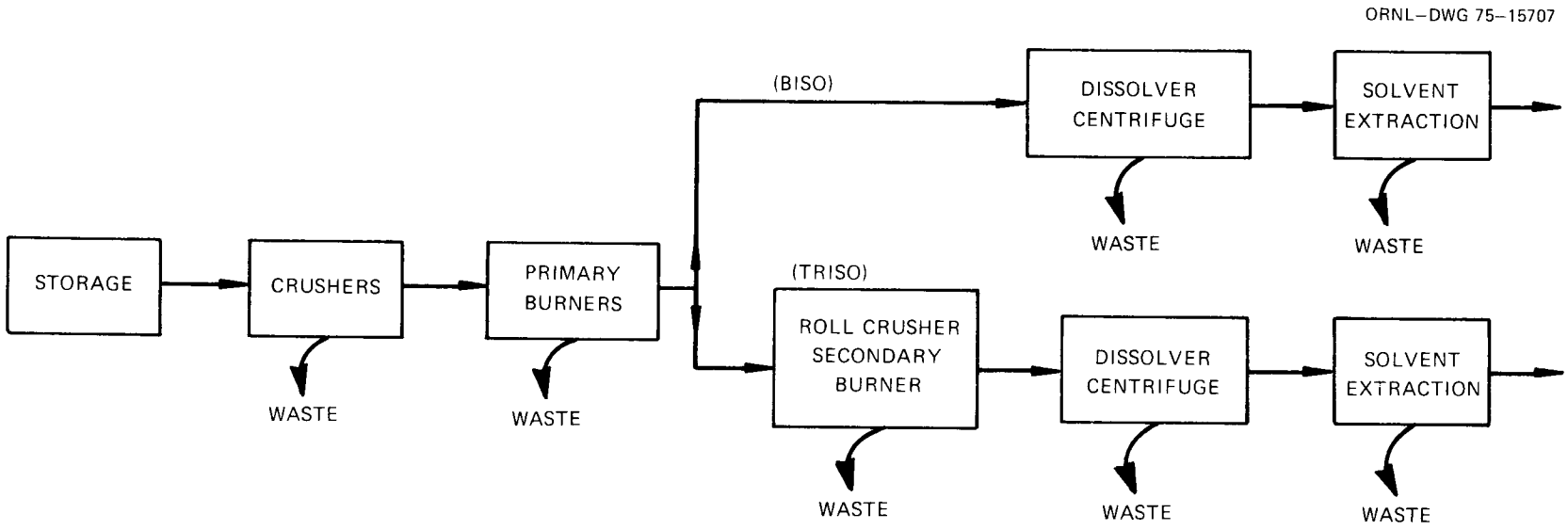

Fig. 8. Simple block diagram for reprocessing.

as oxides. Waste fractions applicable to primary burning and classification are specified separately for fissile particles and fertile particles. Waste fractions applicable to heavy metal content in fissile particles are also specified separately for initial core elements, fresh makeup elements, and recycle 23R elements. Fissile particles from 25R elements are assumed to be retired.

The code assumes that the only purpose for secondary burners is to process TRISO particles. The routines look for user-supplied coating specification for use in calculating heavy metal throughput from secondary burners. Secondary burners are preceded by roll crushers or other equipment capable of breaking the SiC coating and exposing the kernels for oxidation during burning. Material waste fractions applicable to secondary burning are specified the same as for primary burning.

Following the burning processes, the heavy metal is dissolved or leached with acid and then centrifuged to remove residual solids. The solutions are feed adjusted and passed to solvent extraction. Output from solvent extraction (the bred uranium and once-burned spent makeup uranium) is assumed to enter the refabrication plant. Spent thorium is assumed to accumulate in storage. The user supplies separate waste fractions for thorium, bred uranium, and spent makeup uranium; one set applicable to the dissolving process, and another set applicable to solvent extraction. All waste fractions specified for the reprocessing plant should reflect what the user believes to be fixed by either economical recovery or known process efficiencies.

At present, throughputs are confined to mainstream heavy-metal flow evaluated on an annual basis. Waste handling of fission products, neptunium, plutonium, etc., has not yet been considered.

Refabrication

The purpose of the refabrication plant is to produce usually two types of finished fuel elements: 1) fuel elements loaded with bred uranium (23R elements), and 2) fuel elements (25R) loaded with the spent makeup uranium reclaimed from fissile particles in the IM elements.

One of the objectives of the code was to cost possible alternates in fuel refabrication. The basic steps in refabricating HTGR fuel are as follows:

1. Produce a kernel or small microsphere containing either the recycled uranium or a mixture of fresh thorium and recycled uranium.

2. Coat the kernel with various layers of carbon (BISO) or various layers of carbon together with a layer of SiC (TRISO).

3. Blend the fissile particles from the coating operation with fertile particles (coated particles containing only fresh thorium in the kernel) and inert spherical carbon particles called shim or fill particles. The blend of these three particle types is then poured into molds and fused together with a matrix or binder material to form solid cylindrical rods.

4. Load the fuel rods into fuel holes drilled in the fuel blocks and complete the assembly to produce finished fuel elements for recycle to the reactor. Fuel element assembly includes carbonizing fuel rods and annealing fuel elements.

Figure 9 is a simple block diagram used to indicate the forward flow of heavy metal (uranium and, where applicable, thorium) through each major step of refabrication. Within each block, there will be several process steps and numerous pieces of equipment. For the purpose of sizing equipment within each process shown in Fig. 9, it is assumed that throughput for each separate equipment item can be related to the amount of heavy metal entering (or leaving) each process. That is, one should be able to use a simple model for refabrication together with detailed unit costs and unit flows for each equipment item within each process, properly specified, to arrive at good estimates for equipment costs (see section on equipment costs).

The principal reason for specifying the block diagram as shown is to allow one to cost alternate processes considered for some of the major refabrication steps. The introduction (by option) of fresh thorium into microsphere preparation is an example; i.e., some HTGRs might require mixed (Th+U) fissile kernels similar to the first core fuel loaded into the Fort St. Vrain reactor. The user initiates this option by simply specifying a

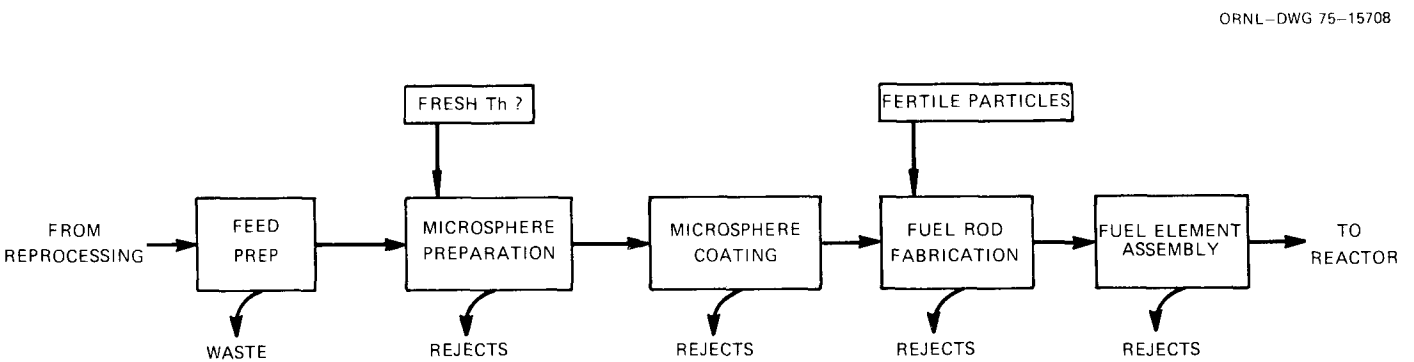

Fig. 9. Simple (general) block diagram for refabrication.

Th/U ratio for the refabricated fissile particle, and the code automatically keeps books on both thorium and uranium through microsphere preparation and microsphere coating as well as thorium fuel preparation in the fresh fuel plant.

The user may optionally select the type of coating to be specified for both the fissile and fertile particles, i.e., either BISO or TRISO. Fertile particles are assumed to be manufactured in the fresh fuel plant. The code calculates (and outputs) the fertile particle thorium requirements for the refabricated elements separately from the fertile particle requirements for the first core elements and fresh makeup elements.

The refabrication plant manufactures two types of fuel elements, i.e., those elements containing the recycled bred uranium in the fissile particles and those elements containing the recycled spent makeup uranium in the fissile particles. The code calculates and reports the throughputs separately for each type of recycle element manufactured, based on the different input specifications defining the two types of fuel elements.

For each reactor specification and each type of fuel element refabricated, the user specifies a loss (to nonrecoverable waste) fraction in feed preparation and reject (to recovery processes) fractions for each major reprocessing step. Waste fractions for microsphere preparation and some processes in microsphere coating should, perhaps, also be considered but have not yet been programmed.

Only one reject fraction per process (per fuel-element type) can be specified; hence, in processes such as microsphere coating where rejects may occur after each coating step (buffer, inner pyrolytic, etc.), the user should specify a gross or overall reject fraction.

Scrap Management

At each process step, such as microsphere preparation, particle coating, etc., in both fresh fuel fabrication and refabrication, there will be produced various amounts of "scrap." Scrap may be rejected uncoated kernels which because of shape, size, loading, etc., do not meet reactor specifications, or scrap may be particles rejected after each coating operation because of, for example, improper coating thickness or density. Some fraction of the molded fuel rods and fuel elements in various degrees of

assembly may also fail to meet specification and contribute to scrap. It also appears that the total amount of rejects may be a rather large (perhaps 30+%) fraction of the total plant throughput. Since uranium values may be upwards of ∿$17,000/kg U, a considerable economic incentive exists for inclusion of scrap recovery systems.

At this writing, the design concept for scrap recovery is still under study. The code presently operates on the assumption that scrap recovery employs the processes similar to those used in spent fuel reprocessing, with some differences. Scrap does not contain either fission products or chemical elements with higher atomic number than uranium. Only fresh thorium would be present in scrap, and there would be no buildup of ^{228}Th in fertile particles as in spent fuel elements. The entry point in a scrap recovery system may be dependent somewhat on the source of rejects, i.e., uncoated kernels, coated particles, fuel rods, or fuel elements.

Table 1 is a general outline of the steps assumed to be required in reclaiming the various categories of scrap. Mixed fissile kernels (i.e., kernels containing mixtures of thorium and uranium) are not the reference recycle particle, but are included as an alternate. It was also assumed that all scrap would be processed in separate equipment, whereas some scrap from refabrication (e.g., rods and elements) may actually be returned to the main chemical plant for reprocessing. When scrap management procedures are eventually specified, then modifications to the bookkeeping can be made to reflect actual practice.

The scrap management procedure does have some flexibility built in. The user can optionally route scrap produced from any refabrication step to either the crushers, the primary fluidized-bed burner, a roll crusher (or other SiC coating removal equipment) or to a dissolver as the entry point for scrap recovery. Figure 10 shows the forward flow of material through the various steps assumed for recovery. As indicated on the diagram, rejected rods will probably be carbonized before entering the crushing equipment and a logical entry point for rejected fuel elements would be direct entry to the crushers. There is, of course, the proposed whole block burner[7] as an alternate to the crusher-fluidized-bed burners for use in the main chemical plant which might also find application in scrap

Table 1. General outline for scrap management

I. Uncoated Kernels

a) Nonmixed fissile kernels

1. Oxidize in furnace
2. Dissolve (leach)
3. Centrifuge to remove solids
4. Separate out decay products (if ^{232}U is present)

b) Mixed (Th+U) fissile kernels

1. Oxidize in furnace
2. Dissolve (leach)
3. Centrifuge to remove solids
4. Separate out thorium (also decay products if ^{232}U is present)

c) Fertile particles (fresh thorium only)

1. Oxidize in furnace
2. Dissolve (leach)
3. Centrifuge to remove solids

II. BISO-Coated Kernels (or TRISO before applying SiC coating)

a) Same steps as (I) above for appropriate kernel type. Oxidation step removes carbon coatings and oxidizes kernels

III. TRISO-Coated Kernels

a) If applied, remove outer pyrolytic coating (heat in furnace)
b) Remove SiC coating
c) Further processing same as for BISO-coated kernels

IV. Rejected Fuel Rods

a) Carbonize (convert pitch to graphite)
b) Crush (produces desired fragment size for burning)
c) Burn (removes external graphite, leaves SiC coating, whole kernel, or ash)
d) Separate (contents of fissile and fertile particles assumed mechanically separable)
e) Further processing of TRISO-coated particles begin with III-b above
f) Further processing of BISO-coated particles begin with dissolving step Ia-2, Ib-2, or Ic-2 for appropriate kernel

V. Rejected Fuel Elements (from assembly)

a) Reject occurs before in-block carbonization. Assume rods can be removed from elements — start scrap management with step IV-a
b) Reject after carbonization — start scrap management with step IV-b

ORNL–DWG 75–15709

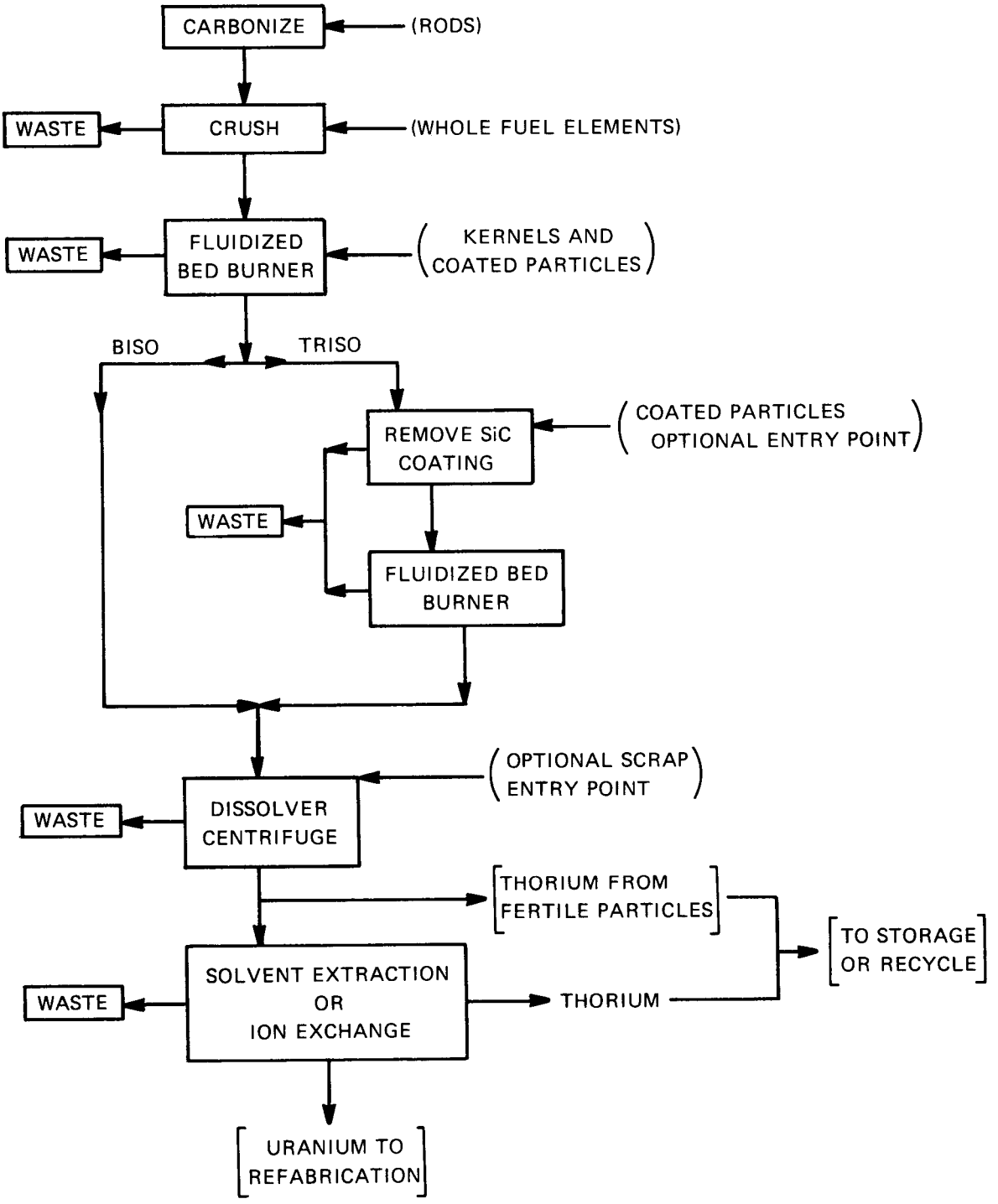

Fig. 10. Simple block diagram for scrap recovery.

recovery. Whereas kernels and coated particles are shown in Fig. 10 as entering the first burner (furnace), the user may optionally route some or all of this scrap to any other entry point shown on the figure, if desired.

As indicated in Table 1, following the dissolving and centrifuge process, it may be desired, or necessary, to clean up the bred uranium and/or to separate thorium from uranium prior to refabrication of scrap. Both ion exchange[8] and solvent extraction[9] have been used to separate thorium from uranium.

Heavy-metal loss to waste is computed from user-specified waste fractions similar to those described in the discussions on chemical reprocessing.

The program assumes that scrap will be recovered on a batchwise basis and effectively recycled a (user) specified number of times per year; i.e., in refabricating the fuel initially, a certain amount of scrap will be produced, the heavy metal will be reclaimed in scrap recovery and returned to refabricate more elements, producing more scrap, etc. Scrap remaining after the nth recycle is assumed to be contributed to the mass of scrap to be recovered during the next successive year.

If a scrap recovery system is not specified, then masses of heavy metal from all rejects accumulate in storage over the history of a calculation.

Fresh Fuel Fabrication

The major steps required in fabricating fresh fuel is essentially the same as refabrication with the following exceptions:

a) The fresh fuel fabrication plant will not require heavy shielding and remote handling like the refabrication plant.

b) Fresh uranium (93.15% ^{235}U) will probably be received as UF_6 from a diffusion cascade. The equipment in uranium feed preparation will probably be somewhat different from the feed preparation equipment in refabrication which may receive bred uranium in solution from solvent extraction.

c) All fertile particles for fresh fuel fabrication and refabrication are assumed to be produced in the fresh fuel plant. Fresh thorium may be received as an oxide. The process and equipment required to produce these

fertile particles may be different from the process and equipment required to produce fissile particles in either the fresh fuel plant or the refabrication plant.

d) It is also assumed that the fresh fuel plant would have its own scrap recovery system (even though it was also assumed to be located adjacent to a refabrication plant) in order to avoid product contamination.

The present version of the code allows a user to optionally recycle fresh thorium recovered from scrap produced in fabrication and refabrication; spent thorium recovered in the main chemical plant from spent fuel elements is, of course, assumed to accumulate in storage.

Subroutines which calculate heavy metal throughput for a fresh fuel plant receive feedback information from subroutines which calculate uranium throughput in refabrication. Uranium content in refabricated fuel elements reduces the amount of fresh enriched uranium required in fresh fuel fabrication of makeup elements.

Initial (first) core fabrication

As can be seen in Fig. 6, the code treats fresh fuel fabrication of first core elements separate from fresh fuel fabrication of makeup elements. It is assumed that most HTGRs will require initial core fabrication to be completed, and all fuel elements delivered to the reactor site some time prior to actual reactor startup to allow time for loading and preoperational testing. The user can optionally specify this initial delay time (reactor "type" dependent) to be used in the bookkeeping.

The number of fresh fuel elements to be fabricated for first core loading will be approximately four (or six) times as many as the total number of fuel elements to be fabricated (including refabrication) for each reload. A user may optionally specify that first core fabrication is to be distributed over some desired number of years (called "spread time"). First core fabrication begins at delay time plus the spread time prior to reactor startup.

Another reason for calculating heavy metal throughputs separately for first core loading is because those elements contain somewhat different masses of uranium and thorium than fresh makeup fuel elements. These

differences in loading can be seen by comparing the data given in Table 2. These data were obtained from safety analysis reports[1,2] and a progress report,[10] and indicate that first core elements are loaded heavier in thorium and lighter in enriched uranium than fresh makeup fuel elements. The data also show some difference in average loadings per fuel elements between the Fort St. Vrain reactor and the Summit Power Station. To account for differences in fuel loadings described above, a user specifies for each reactor "type" (up to a maximum of four types) initial core loading per fuel element separate from fresh makeup loadings. Kilograms of thorium and enriched uranium in fresh fuel fabrication of initial core elements are tabulated separately from masses of thorium and enriched uranium fabricated in fresh makeup fuel elements.

Heavy metal discharged from first core element

The mass of heavy metal (thorium and uranium) discharged in spent first core fuel elements is also different from the mass of heavy metal discharged from makeup fuel elements. There are two reasons for these differences: (a) as described in the section above, first core elements are initially loaded different from the fresh makeup elements, and (b) not all first core fuel elements receive a full 4-year (or 6-year) residence time in reactor prior to removal. The first batch, approximately one-fourth (or one-sixth) of the total fuel elements, has resided in the core the equivalent of 292 full power days, assuming 80% capacity factor prior to removal. The second batch of first core elements has resided in the core 584 full power days prior to removal; the third batch, 876 full power days, etc., until the specified 4-year (or 6-year) fuel lifetime has been reached. Therefore only the last batch of first core elements will have received the same in-reactor exposure as reloaded fuel elements. All other first core elements have resided in the reactor somewhat shorter time periods prior to removal. Bred uranium builds up, and thorium and enriched uranium depletes, as a function of in-core residence time. The amount of bred uranium, spent enriched uranium, and spent thorium which can be extracted from these first core elements in reprocessing, therefore varies from reload to reload as the first core fuel elements are being removed from the

Table 2. Comparison of first core loading with fresh makeup loading

Fort St. Vrain Reactor	
First (Initial) Core; 1482 Elements	
Thorium, kg	15913.9
Uranium,* kg	774.3
Th/U (average)	20.55
Average loading per element	
Thorium, kg	10.738
Uranium, kg	0.522
Reload Segments; Average Based on 240 Elements	
Thorium, kg	2306.7
Uranium, kg	202.9
Th/U	11.24
Average loading per element	
Thorium, kg	9.61
Uranium, kg	0.85
Summit Power Station (Delmarva)	
First (Initial) Core; 2744 Elements	
Thorium, kg	26080
Uranium, kg	1237
Th/U	21.08
Average loading per element	
Thorium, kg	9.5
Uranium, kg	0.45
Reload Segments; Average	
Thorium, kg	5870
Uranium, kg	527
Th/U	11.06
Average loading per element	
Thorium, kg	8.6
Uranium, kg	0.77

*All uranium shown is enriched to 93.15% ^{235}U.

core. Figure 11 shows typical amounts of bred uranium, spent makeup (enriched) uranium, and spent thorium discharged during first core replacement relative to "equilibrium" discharges. The results shown in Fig. 11 were calculated from mass balances[11] for a single 1160 MW(e), four-reload segment, HTGR operating nonrecycle.

To calculate the masses of heavy metal discharged during approach to "equilibrium" requires the following user input data: (a) average discharged masses on a per element basis at equilibrium, and (b) ratios of heavy metal discharged at the end of each cycle relative to equilibrium, i.e., such as shown in Fig. 11.

This method of calculating heavy metal discharged applies during the time that the first core elements are being removed and prior to fuel recycle.

Figure 12 shows that first core elements can be a large percentage of the total fuel elements removed from all reactors, annually, over the history of a calculation. These data are for illustrative purposes only and reflect an HTGR growth schedule such as in Fig. 3 and numerous assumptions on reactor fuel management. Clearly, other assumptions on HTGR growth and fuel management can produce somewhat different distributions than shown in Fig. 12.

COST CALCULATIONS

Not all of the routines for calculating costs have been completed. The sections which follow describe the methods, equations, etc., which have been programmed.

Equipment Costs

The only reason for calculating process throughputs in the fresh fuel fabrication plant, reprocessing plant, and refabrication plant is to provide information which could serve to estimate plant equipment costs. All throughputs have been calculated on an annual basis under the assumption that if the reactors operate as planned, if the process reject rates and waste loss rates are realistic, and if the fabrication plant, reprocessing

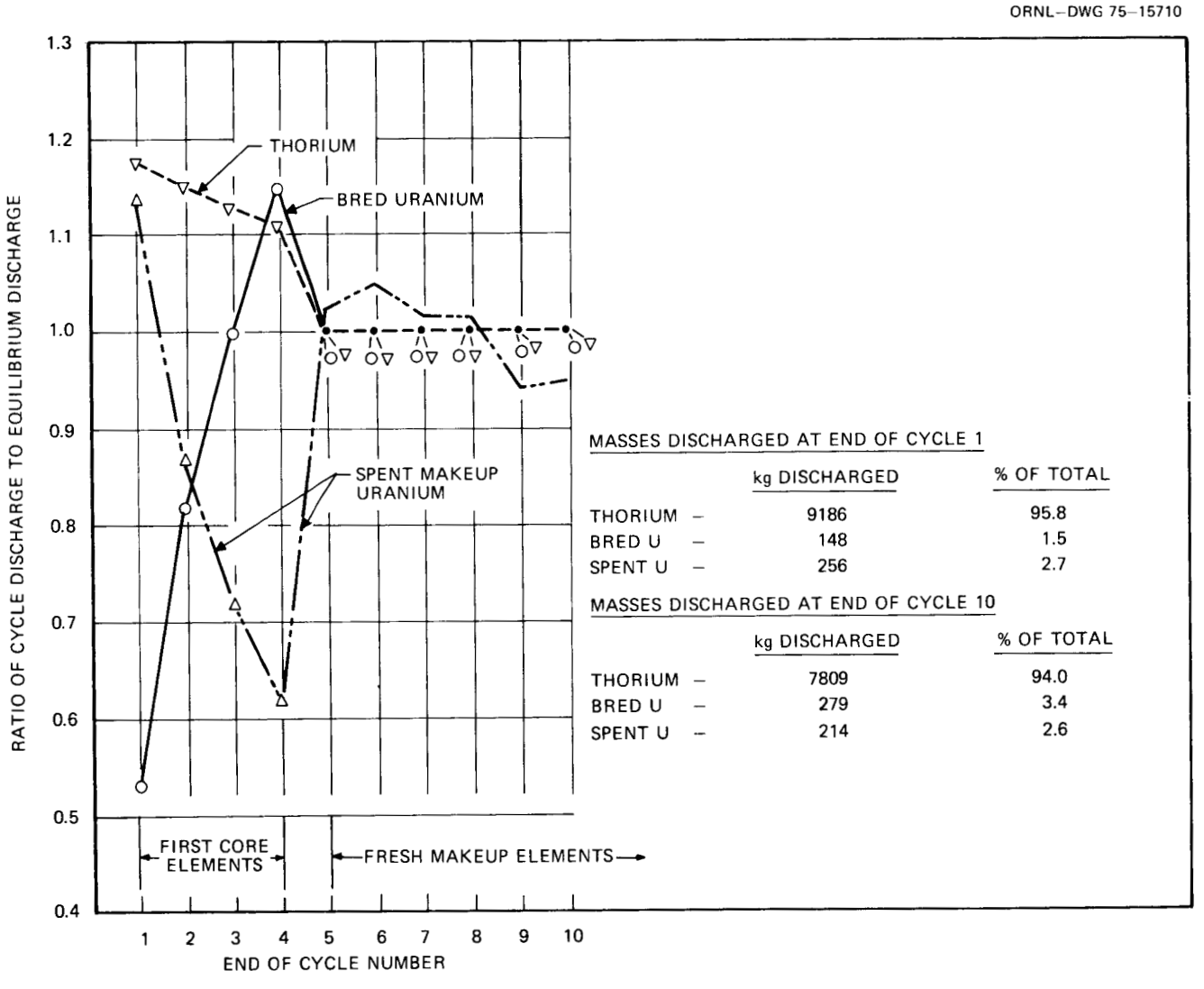

Fig. 11. Trends in heavy metal discharge on approach to "equilibrium" 1160 MW(e) reactor operating nonrecycle.

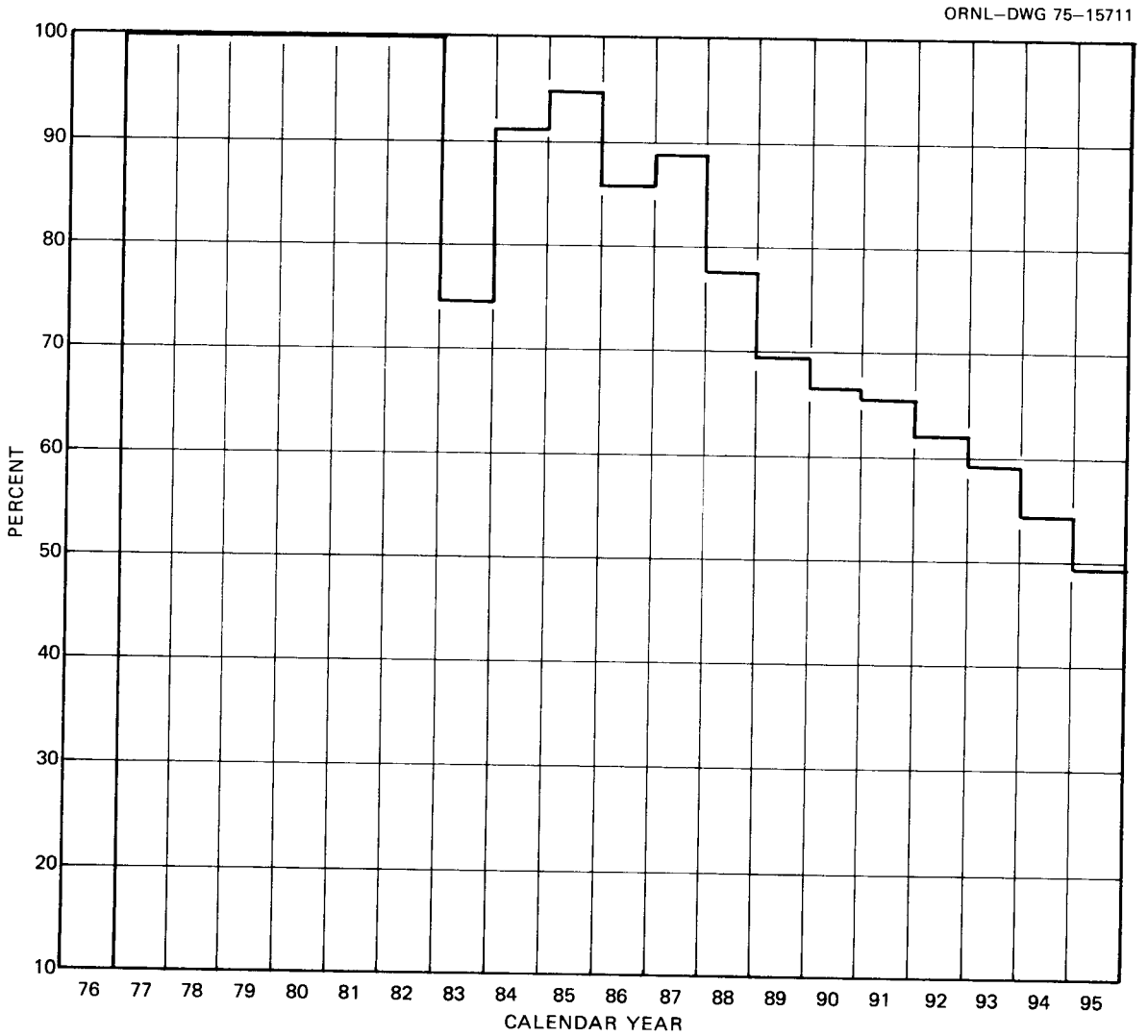

Fig. 12. Percent of total annual fuel elements removed which are first core elements.

plant and refabrication plant are built (or expanded) as needed or as preplanned, then each major process in fabrication and refabrication (e.g., microsphere preparation, microsphere coating, etc.) will be receiving and discharging a calculated amount of heavy metal, or producing a gross number of fuel elements (or fuel rods) during each successive year. Likewise, the reprocessing plant will be processing some average number of spent elements to reclaim some amount of uranium for refabrication and producing a volume of waste and unrecovered heavy metal each successive year.

Using information from plant conceptual designs and associated detailed cost information, together with the calculated annual process-dependent throughputs, one must arrive at total equipment costs. Within each process there will be several pieces of major equipment. It is assumed that each piece of major equipment will be designed to operate over some range of capacity (i.e., up to X kilograms of heavy metal per day or up to N fuel elements per day, etc.). It is also assumed that if the design capacity for a particular machine is exceeded, then multiple units will be installed to meet the actual process requirements; i.e., scaling will, in most cases, be accomplished by using multiple units of identical equipment as opposed to designing larger units.

For each process, the user prepares a library of cost and operating data applicable to each piece of equipment. For each process, the user may subdivide all equipment items into not more than 30 discrete categories. For each category, the following information is supplied:

1. A daily throughput (e.g., kg/day, elements/day, etc.) assuming that the equipment is operating as a separate unit.

2. An availability or operating factor which is the fraction of time that the machine may be idle because of its proximity within the overall process. The "true" throughput becomes the product of the first two items.

3. Unit cost data (dollars for each machine) broken down into separate entries for (a) materials, (b) labor, (c) engineering, and (d) installation. These subdivisions of cost data are desirable, if known, in order to best represent costs of multiple units; for example, engineering costs on ten production units will not necessarily be ten times the engineering cost for one prototype unit.

4. An estimate of the projected floor area per unit. These data are used to estimate the total plant (and cell) floor area. The user must consider, where applicable, that some equipment items may be stacked vertically in arriving at this entry.

Items 5, 6, and 7 are components of daily operating costs.

5. An estimate of daily man-hours for operating each machine or category of equipment.

6. An estimate of daily maintenance man-hours per machine or category of equipment.

7. An estimate of the daily dollar value for consumable items associated with that category of equipment.

To account for scheduled outages, preplanned maintenance, etc., an overall plant operating (or "capacity") factor is also specified. This factor is to be applied to all equipment within a plant. Thus, the number of equipment items (each category) is computed by dividing the annual throughput by the product of the plant operating factor, the equipment throughput, and the equipment operating factor, rounded up to the next whole number.

Plant Expansion

As shown earlier in Figs. 5 and 6, as more HTGRs come on-line, the annual plant throughput will be increasing over most of the history of a calculation. Process throughputs, amount of equipment, and size of each plant will also have to change in proportion to the overall plant input or output (Figs. 5 and 6). It is very unlikely that these fabrication, reprocessing, and refabrication plants will each be expanded, or new plants built, on a year-to-year basis to exactly follow estimated annual throughputs. It is assumed that the plants will be expanded according to some preplanned schedule and sized for maximum throughputs between expansion dates. The user specifies the plant expansion schedule (calendar dates) and the code searches for maximum annual throughputs between expansion dates. Equipment costs, both initial and for addition, are based on these maximum throughputs.

Hardware Costs

Hardware costs are defined as the costs associated with the purchase of finished graphite blocks for use in fuel element assembly. The assumption is made that finished hexagonal graphite blocks not yet loaded with fuel are delivered to either the fresh fuel fabrication plant or to the refabrication plant as needed at some specified unit cost.

There are two general categories of fuel blocks: regular fuel elements and control fuel elements. Figure 13 shows the distribution of regular fuel elements and control fuel elements required in the reloading sequence of a single HTGR. Four different size HTGRs are shown for comparison. First or initial core loading is, of course, the sum of all segments for a particular reactor. The first reload for each size reactor shown in Fig. 13 is represented by the left-most bar. The number of fuel elements and control fuel elements required for each reload can be obtained by reading from left to right and repeating the pattern throughout reactor lifetime. Notice that one reload segment for each reactor size requires a somewhat different number of fuel elements and control fuel elements than the other segments. With the exception of the large reactor,[12] data appearing in Fig. 13 were obtained from safety analysis reports.[1-3]

Approximately 15% of the total reactor fuel elements will be the control fuel elements. Both regular and control fuel elements have physical dimensions which are ∿31.22 in. long and 14.17 in. across flats. Control fuel elements have two large holes (4.0 in. diam) drilled through axially for the control-rod pair and one 3.75-in.-diam hole drilled through axially for reserve or emergency shutdown poison. These holes occupy space which would otherwise be available for fuel; hence, control fuel elements will have fewer drilled holes for fuel and coolant passages than regular fuel elements. When the reactor is loaded, the fuel elements are stacked one above the other to form either control element or regular element columns. These columns may be stacked either six high as in the Fort St. Vrain reactor or eight high as proposed for the larger reactors. The column containing the control fuel elements are usually surrounded by six columns of regular fuel elements and this cluster of seven columns is called a region. A few regions at the core-reflector interface may have less than seven

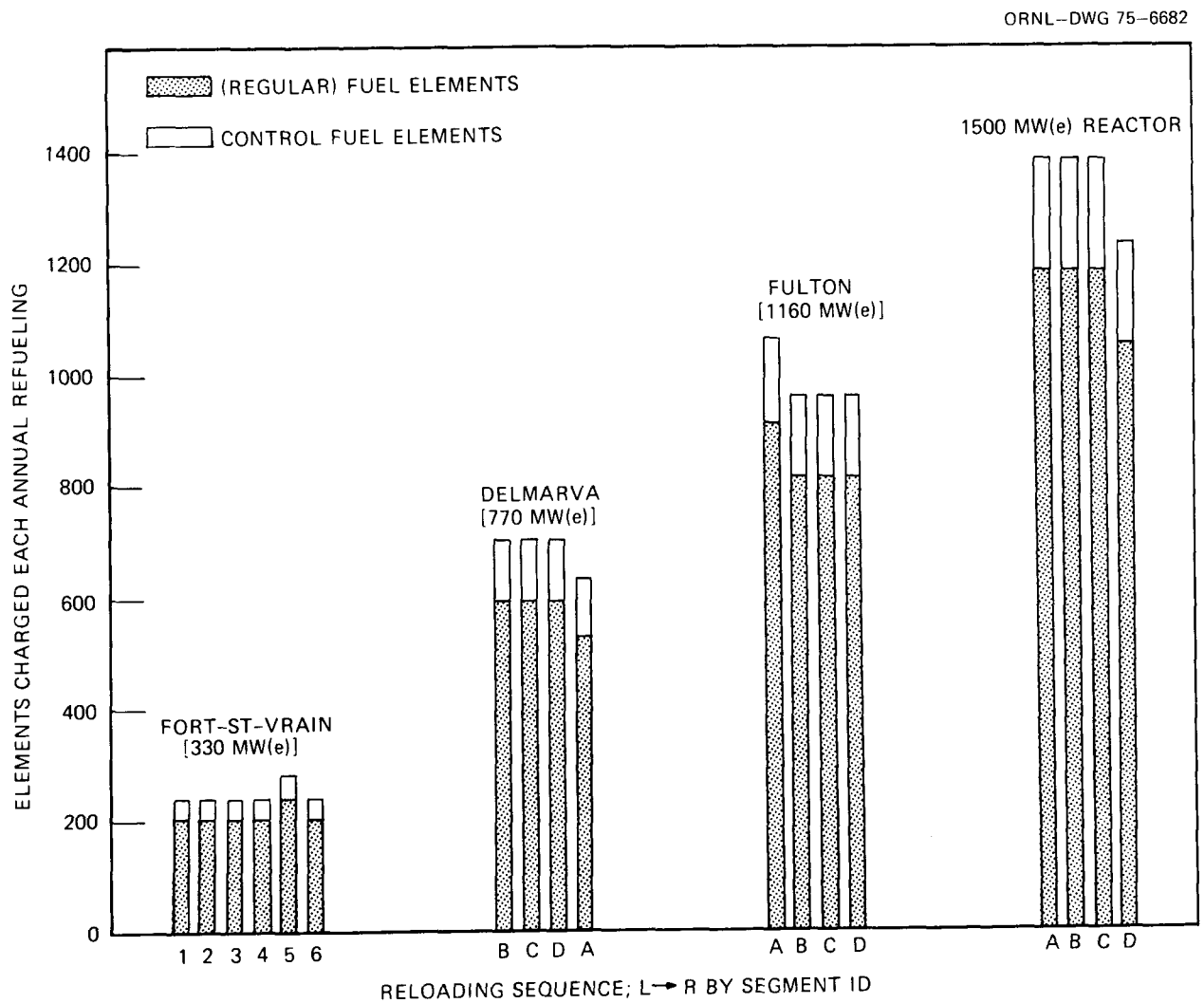

Fig. 13. HTGR fuel (element) management.

columns to preserve the approximate cylindrical active core configuration. The elements in the central column (control fuel elements) are positioned downward with respect to elements in the surrounding columns, in order to key each region and minimize possibility for radial core movement. As a result, bottom control fuel elements in each region of the Fort St. Vrain reactor have fuel holes drilled shorter[1] than the length of the fuel bed in other elements to allow the active core to terminate in a common plane at the bottom. These "short" control fuel elements constitute ∿2.5% of all fuel elements in the Fort St. Vrain reactor. It is not certain that "short" control fuel elements will also be used in the larger reactors.[2,3]

For the purpose of calculating hardware costs, a user specifies the unit costs ($/element) for regular fuel elements and for control fuel elements. Short control fuel elements are neglected. Unit costs are also specified according to reactor type to account for any cost differences in either regular fuel elements or control fuel elements, if applicable. Cost escalation can also be considered if desired. The user specifies the year in which the unit costs are to be referenced, i.e., evaluated in 19XX dollars, and two annual escalation rates. The first escalation rate adjusts the unit costs from reference year to the date at which the cost calculation is to begin; the second escalation rate is applied during the history of a cost calculation.

The code lists hardware costs separately by reactor type and for regular fuel elements and control fuel elements. Hardware costs are also summed and listed on a summary table.

Annual hardware costs will be treated as tax deductible expense in later discounted cash flow analyses.

Uranium Costs

Fully enriched uranium (93.15% ^{235}U) is feed material to the fresh fuel fabrication plant. Some small fraction of the feed material to the fresh plant will enter the waste stream during scrap recovery. Therefore, in costing fuel fabrication, it is desirable to keep records on fuel values in waste streams. The plan is not to include these costs in derived fabrication unit costs, but to display the values as economic incentives for optimizing the uranium recovery systems.

Another uranium cost which should be calculated, but not necessarily included in fabrication unit costs, is fabrication plant inventory charges. We assume that the utilities (or the fabrication plant operators) will purchase fresh feed at some lead time prior to completion of fabrication, and that from the time of purchase until completion of fabrication, there will be an interest charge placed on all uranium values. Within the fabrication plant there will be internal recycles (scrap recovery) containing amounts of uranium which also will accrue interest costs.

To illustrate how inventory costs and waste costs can vary with process reject rates in fabrication and waste fractions in scrap recovery, let us consider an extremely simple model, shown in Fig. 14, having only one source of rejects and only one place in scrap recovery where uranium can enter waste. More realistic scrap recovery models are described in Appendix A.

In Fig. 14, fabrication occurs AB with a batch of fuel containing x kilograms of uranium. At point B, $(1 - f)x$ leaves fabrication as finished product and fx enters scrap recovery, where f is the reject fraction. At point C, an amount of f_1fx of the uranium in scrap recovery enters the waste stream and is not returned to fabrication. The remaining portion $(1 - f_1)fx$ is returned to fabrication and mixed with incoming feed, F, at point A. The waste fraction is f_1.

We assume in this example that each batch of fuel being fabricated contains the same amount of uranium, x. We also assume equilibrium, such that $R + F = x$, and express the feed-to-product ratio in terms of the reject fraction and waste fraction,

$$F/P = [1 - f(1 - f_1)]/(1 - f) \ .$$

This equation indicates that if the waste fraction is zero ($f_1 = 0$), the feed-to-product ratio is unity and independent of the reject fraction, f. If $f_1 \neq 0$, feed-to-product ratio varies directly with both the reject fraction and the waste fraction.

Let U be defined as the unit cost, \$/kg, for enriched uranium. The dollar value for uranium contained in the waste stream per kilogram of uranium leaving in finished product is:

$$W_U = Uf_1f/(1 - f) \ .$$

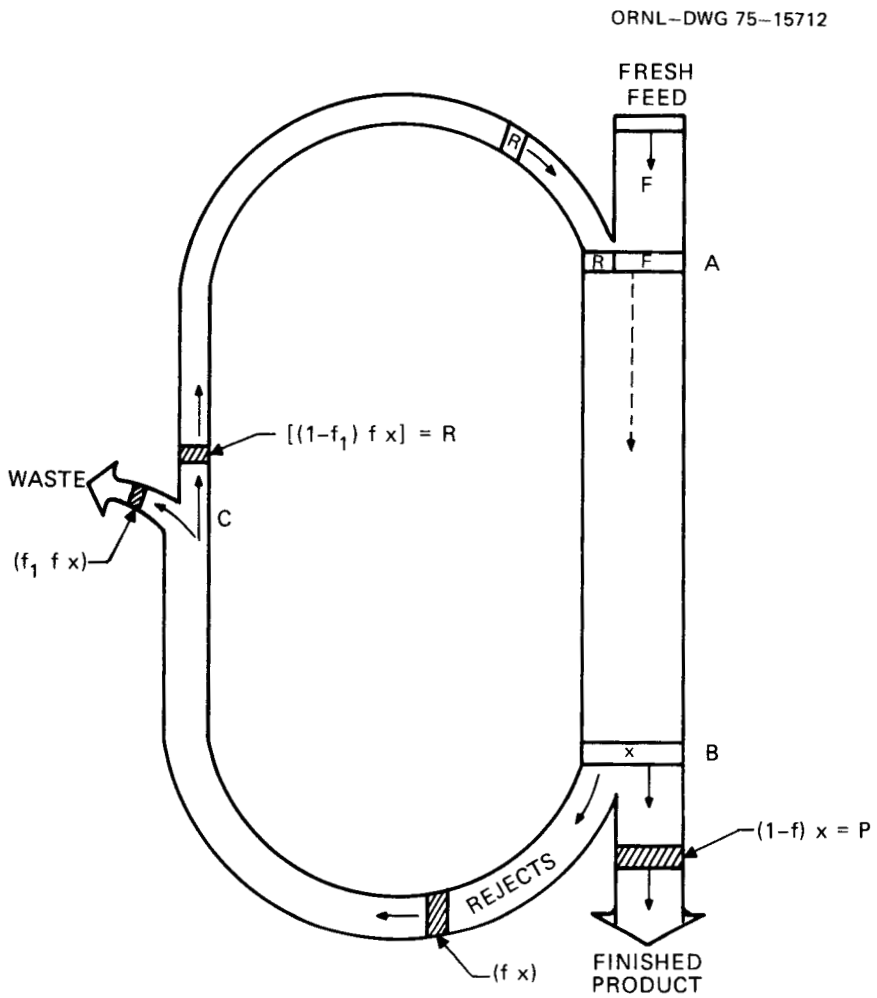

Fig. 14. Model for illustrating inventory charges.

The cost for uranium not recovered in the scrap recovery system varies directly with both the waste fraction and the reject fraction.

If we ignore compounding, the unit inventory charge, C, which one must pay would be the product of the unit cost of uranium, U, times an interest rate, r. Represent the time required for the uranium to pass through the fabrication process, A to B, by t_1; the time required for rejects to arrive at C (from B) by t_2; and the time required for the reclaimed rejects to return to fabrication, C to A, by t_3. The inventory charges, I, per kilogram of uranium leaving in finished product are:

$$I = C(t_1 + f\ t_2 + f(1 - f_1)t_3)/(1 - f) \ .$$

It should be evident that reducing the turn-around time ($t_2 + t_3$) in scrap recovery has the effect of reducing inventory charges, all other conditions unchanged. It can also be seen that the inventory charges vary directly with the reject fractions. As the waste fraction $f_1 \rightarrow 0$, all other conditions fixed, the value of the third term in the above inventory cost equation increases, i.e., approaches $f\ t_3$. Recall that for condition of zero waste, at equilibrium, the feed-to-product ratio was minimum (unity) and the value of uranium contained in waste was, of course, zero. Unless t_3 is very large (of the order of years), the increase in inventory charges as f_1 decreases to f_1' will be much less than the corresponding savings which result from the reduction of uranium content in waste. The savings in W_U would be $Uf(f_1 - f_1')/(1 - f) \equiv K$. The corresponding increase in inventory charges (ignoring compounding) would be Krt_3. Therefore, in this example, if $rt_3 \leq 1$ (e.g., if $r = 0.15$ per annum and $t_3 \leq 6.67$ years), the increase in inventory charges will be less than the savings from reduced uranium values in waste.

For all practical purposes, minimizing waste fractions, reject fractions, and turn-around time in scrap recovery (as well as total fabrication time) all reduce uranium charges in fabrication and refabrication.

Unit cost for enriched uranium

Unit costs for enriched uranium (\$/kg of enriched U) received from a gaseous diffusion plant at beginning of each accounting period N are computed by the following equation:

$$C^{U}_{(N)} = \left\{ \left[C_{(U308)} \times 2.6 + C_{(c)} \right] \left(\frac{x_p - x_w}{x_f - x_w} \right) (1 + r_f)^{N-1} \right\} +$$

$$\left\{ C_{(sw)} \left[\phi_{(p)} + \phi_{(w)} \left(\frac{x_p - x_f}{x_f - x_w} \right) - \phi_{(f)} \left(\frac{x_p - x_w}{x_f - x_w} \right) \right] \right\} \left\{ (1 + r_{sw})^{N-1} \right\}.$$

The separation potentials for gaseous diffusion plant product (p), feed (f), and tails (w), respectively, are:

$$\phi_{(p)} = (2x_p - 1)\, \ell n\, [x_p/(1 - x_p)],$$

$$\phi_{(f)} = (2x_f - 1)\, \ell n\, [x_f/(1 - x_f)],$$

$$\phi_{(w)} = (2x_w - 1)\, \ell n\, [x_w/(1 - x_w)].$$

Other definitions are:

$C_{(U308)}$ = ore cost as U_3O_8, \$/lb U_3O_8,

$C_{(c)}$ = U_3O_8 to UF_6 conversion cost, \$/kg U,

$C_{(sw)}$ = enriching cost, \$/SWU,

x_p = weight fraction of ^{235}U in product (e.g., 0.9315),

x_f = weight fraction of ^{235}U in natural feed (e.g., 0.00711),

x_w = weight fraction of ^{235}U in transaction tails (e.g., 0.002),

r_f = escalation rate applied to feed cost, fraction/annum,

r_{sw} = escalation rate applied to enriching cost, fraction/annum.

The code computes unit costs for enriched uranium on a year-by-year basis throughout the history of a calculation. The user inputs all of the data above under <u>other definitions</u>. The escalation rates are included in the equation to allow a user to increase feed costs and increase costs for enriching services, both on a year-by-year basis if desired. A zero entry for these escalation rates yields a constant unit cost for enriched uranium.

Thorium Costs

Unit costs ($/kg of thorium) for fresh feed thorium are calculated on a year-by-year basis with the following equation:

$$C^{Th}_{(N)} = C^*_{(Th)}(1.13793)(1 + r_{(Th)})^{N-1} ,$$

where

$C^*_{(Th)}$ = $/kg ThO_2 (user input),

$r_{(Th)}$ = escalation rate, fraction/annum (user input),

1.13793 = molecular weight ratio, kg ThO_2/kg Th.

Thorium unit costs may be increased on a year-by-year basis by the user's choice of $r_{(Th)}$; a zero entry fixes thorium unit cost proportional to the user's value for $C^*_{(Th)}$ as shown above.

Thorium values in waste and inventory charges on thorium are computed by the code in a manner similar to that discussed for enriched uranium.

SPENT FUEL ELEMENT HEAT SOURCE

Estimated fission-product decay heat is calculated by the code. The purpose of the calculation is to provide a rough estimate of the expected gross heat load from stored spent fuel elements. The results are intended to be used in estimating the cost of heat removal equipment and not for design purpose.

Fission-product decay heat is computed by the Way-Wigner formula[13] shown below:

$$P/P_0 = 0.0622 \left[t^{-0.2} - (T + t)^{-0.2}\right] ,$$

where

P = fission-product power generation t seconds after reactor shutdown,

P_0 = reactor power generation during irradiation,

T = irradiation period, sec.

The user specifies a value for t which is applicable to all reactors and unchanged throughout the history of a calculation. The irradiation period is automatically calculated by the code from data input by the user

on fuel residence time, assuming an 80% capacity factor. Adjustments in irradiation period to reflect first core replacement are considered in order to account for the first few batches of spent fuel which have not remained in core a full residence time.

The user is cautioned that the simple statistical formula above is claimed to give results which are correct only within a factor of two for decay times between 10 sec and 100 days.[13] Values of fission-product decay heat output by the code are gross maxima and do not allow for extended low-power operation, and also assumes simultaneous discharge from all reactors in a given year.

WORK REMAINING TO BE DONE

Mainstream flows of heavy material in fabrication, reprocessing, refabrication, and scrap recovery are reasonably well defined. Unit cost data for equipment in fuel element assembly, fuel rod manufacture and microsphere coating have been prepared from conceptual design reports and detailed cost estimates for the HTGR fuel refabrication pilot plant. Similar unit cost data have yet to be prepared for microsphere preparation and feed preparation for both fresh fuel fabrication and refabrication. The unit cost data for fuel element assembly and fuel rod manufacture have been used in the subroutines which calculate equipment cost and components of operating cost.

Basic cost data must be prepared for chemical reprocessing and scrap recovery. Maintenance facilities, waste handling facilities and costs associated with quality control, environmental protection and safeguards are subjects which have yet to be addressed.

The requirements for spent thorium storage, spent fuel element storage, and both fresh and refabricated fuel element storage can now be calculated, but as of yet no procedure has been programmed for costing storage.

The mathematics for a discounted cash flow analysis have been studied and procedures worked out for implementing this method in calculating unit fabrication, reprocessing and refabrication costs. The subject of cost escalation during the construction period and during the plant operating

history has also been studied. These cost packages will require some degree of modification before being coupled to the main program.

CODE INPUT INSTRUCTIONS

The following pages document the card input instructions describing the data which must be punched on cards to run a case with this code. These instructions were applicable at the time that this preliminary report was being drafted (1975), but are subject to change as the program develops. The INPUT FORMAT is specified in parentheses immediately to the right of each card identification number. Only IBM FORTRAN IV language has been used in programming. Input device is LOGICAL UNIT 5; output device is LOGICAL UNIT 6; no other I/O devices are presently required. The program requires 276K (4-byte words) of directly addressable core storage on the IBM-360 series computers.

CARD 0: (5I4) — General Control Information

IYEAR	=	Calendar year in which the history is to begin. (Reactor build schedules are indexed from this entry; e.g., 1975, 1980, etc.)
NTIME	=	Plant history begins in YEAR=IYEAR and extends to YEAR=IYEAR+NTIME. (NTIME $\leqq$ 20)
NTYPE	=	Number of separate reactor specifications to be combined in final results (NTYPE $\leqq$ 4).
NDECAY	=	Spent fuel element decay time (days) at reactor site, plus shipping time, before arriving at fuel storage facility.
NPROCS	=	Year in which spent fuel reprocessing is to begin. Normally, IYEAR $\leq$ NPROCS $\leq$ (IYEAR+NTIME); if NPROCS=0, only fresh makeup fuel is fabricated.

Cards 1 through 25 must be repeated NTYPE times; i.e., cards 1 through 25 apply to first (I=1) reactor specification; cards 26 through 50 apply to second (I=2) reactor specification, etc.

CARD 1 (18A4)

TITLE(I)	=	Any desired information to identify reactor TYPE(I).

CARD 2 (3I4,5E12.5)

NDLY(I)	=	First core fabrication is to be completed NDLY years prior to reactor startup. (Suggest using 0 or 1.)
NSPRD(I)	=	First core fabrication may be spread over NSPRD years, i.e., begin fabricating first core elements NDLY+NSPRD years prior to actual reactor startup. The only limitation is that NTIME+NDLY+NSPRD $\leqq$ 32.
LRES(I)	=	Normal fuel residence time (years) excluding first core elements; i.e., for present HTGRs, LRES = 4 or 6.
XNO(I,1)	=	Number of fuel sticks per control fuel element. This number should be a weighted averaged to account for short bottom elements.

XNO(I,2) = Number of fuel sticks per (normal) fuel element. (Don't forget that the fuel bed length may be short under dowels.)

REJT(I,1) = Fuel element assembly rejection rate (fractional, i.e., 0.01 for 1%) for fresh fuel assembly of control fuel elements.

REJT(I,2) = Fuel element assembly rejection rate (fractional) for fresh fuel assembly of regular fuel elements.

REJT(I,3) = Fuel rod manufacture rejection rate (fractional) for fresh fuel stick production.

CARD 3: (I4,8X,5E12.5)

KJ(I) = Extend first cycle operation by KJ(I) years.

XCAP(I) = Reactor electrical output (MW). (Note: 39% efficiency is assumed by the code in calculating reactor thermal output.)

WTH1(I,1) = First core thorium loading. Average kilograms of thorium per control fuel element.

WTH1(I,2) = First core thorium loading. Average kilograms of thorium per regular fuel element.

WU1(I,1) = First core uranium loading. Average kilograms of uranium per control fuel element.

WU1(I,2) = First core uranium loading. Average kilograms of uranium per regular fuel element.

CARD 4: (2I4,4X,5E12.5)

ICOAT1(I,1) = First core fissile particle coating specification. If BISO enter 0; if TRISO enter 1. Note: Specify desired coating on all subsequent coating specifications by entries of either 0 or 1.

ICOAT1(I,2) = First core fertile particle coating specification (BISO or TRISO).

THTU1(I) [Col.13–24] = First core fissile particle (kernel) thorium/uranium ratio (i.e., 0.0, 4.25, 8.0, etc.). Note: Must not exceed the average Th/U ratio for the entire element.

REJT(I,8) = First core, BISO coating rejection rate (fractional).

REJT(I,9) = First core, TRISO coating rejection rate (fractional).

REJT(I,10) = First core, fertile microsphere (kernel) rejection rate (fractional).

REJT(I,11) = First core, fissile microsphere (kernel) rejection rate (fractional).

CARD 5: (4E12.5) — Applies to Annual Fresh Makeup Fabrication

WTH2(I,1) = Thorium loading in fresh makeup control fuel element (average kilograms Th per element).

WTH2(I,2) = Thorium loading in fresh makeup regular fuel element (average kilograms Th per element).

WU2(I,1) = Uranium loading in fresh makeup control fuel element (average kilograms uranium per element).

WU2(I,2) = Uranium loading in fresh makeup regular fuel element (average kilograms uranium per element).

CARD 6: (2I4,4X,5E12.5)

ICOAT2(I,1) = Specify coating type (BISO or TRISO) for fissile particles in fresh makeup elements (see instructions, card 4).

ICOAT2(I,2) = Specify coating type for fertile particles in fresh makeup elements (BISO or TRISO).

THTU2(I) [Col.13–24] = Fissile particle (kernel) thorium/uranium ratio, fresh makeup elements.

REJT(I,4)* = BISO coating rejection rate (fractional), fresh makeup element fabrication.

REJT(I,5)* = TRISO coating rejection rate (fractional), fresh makeup element fabrication.

REJT(I,6)* = Fertile microsphere (kernel) rejection rate (fractional), fresh makeup element fabrication.

REJT(I,7) = Fissile microsphere (kernel) rejection rate (fractional), fresh makeup element fabrication.

---

*Also apply to fertile particle production for refabricated elements.

The data on cards 7, 8, 9, and 10 define thorium, bred uranium, and spent makeup uranium discharged in spent fuel elements during the time that the reactors are operating no recycle. The data on card 7 should be at "equilibrium," while the data on cards 8, 9, and 10 adjust for flushing the first core on approach to equilibrium conditions (see section on first core elements in text).

CARD 7: (6E12.5) — Equilibrium Masses

WTHD(I,1)	=	Average kilograms (spent) thorium discharged per control fuel element.
WTHD(I,2)	=	Average kilograms (spent) thorium discharged per regular fuel element.
WBUD(I,1)	=	Average kilograms bred uranium discharged per control fuel element ($^{233}U + ^{234}U + ^{235}U + ^{236}U$).
WBUD(I,2)	=	Average kilograms bred uranium discharged per regular fuel element.
WSUD(I,1)	=	Average kilograms spent makeup uranium discharged per control fuel element ($^{234}U + ^{235}U + ^{236}U + ^{238}U$).
WSUD(I,2)	=	Average kilograms spent makeup uranium discharged per regular fuel element.

CARD 8: (6E12.5)

FTHD((I,J), J=1,N)	=	Spent thorium approach to equilibrium factors for refuelings 1 through N, respectively, where N is fuel residence time (year), i.e., mass of thorium discharged at first refueling from (1) control fuel element = WTHD(I,1)*FTHD(I,1); thorium from (1) regular element = WTHD(I,2)*FTHD(I,1), etc., for each other refueling. Zero (or blank) entries are set to 1.0 automatically.

CARD 9: (6E12.5)

FBUD((I,J), J=1,N)	=	Bred uranium approach to equilibrium factors for refuelings 1 through N, respectively; same meaning as card 8, but applies to bred uranium.

CARD 10: (6E12.5)

FSUD((I,J), J=1,N) = Approach to equilibrium factors for discharged spent makeup uranium for refuelings 1 through N, respectively; same meaning as card 8, but applicable to spent makeup uranium.

The data on card 11 apply after recycle begins with fuel elements containing recycled fuel being discharged. The data on card 7 are multiplied by these factors to represent step changes in mass discharged during transition from no recycle to recycle operation.

CARD 11: (3E12.5)

FTHDF(I) = This factor is multiplied by both WTHD(I,1) and WTHD(I,2). Ratio of thorium discharged during recycle operation to thorium discharged during no recycle operation.

FBUDF(I) = Applied to both WBUD(I,1) and WBUD(I,2). Ratio of bred uranium discharged during recycle operation to bred uranium discharged during no recycle operation.

FSUDF(I) = Applied to both WSUD(I,1) and WSUD(I,2). Ratio of spent uranium discharged during recycle operation to spent uranium discharged during no recycle operation.

CARD 12: (6E12.5) — Control Fuel Element Data

W(I,1,K) = Number of control fuel elements replaced during refueling of each reload segment. Refueling sequence K=1, LRES(I).

CARD 13: (6E12.5) — Regular Fuel Element Data

W(I,2,K) = Number of fuel elements replaced during refueling of each reload segment. Refueling sequence K=1, LRES(I).

CARDS 14 and 15: (18E4.2) — Reactor Build Schedule

B((I,L), L=1,M) = Number of reactors of this type (I) which are built and on-line during year L. Supply this data for each year up to M=NTIME+NDLY(I)+NSPRD(I). Note: Calendar year, IYEAR (card 0), corresponds to L=1.

CARD 16: (3I4,5E12.5) — The 23R Fuel Specification

ICOAT3(I,1)	=	Fissile particle coating specification.
ICOAT3(I,2)	=	Fertile particle coating specification. Note: Specify BISO or TRISO coating. See instructions on card 4.
THTU3(I)	=	Fissile kernel thorium-to-uranium weight ratio.
THTU4(I)	=	Thorium-to-uranium weight ratio in finished fuel element (average value).

CARDS 17, 18, 19 and 20: (6E12.5) — Waste Fractions for Processes in Main Chemical Plant and Scrap Recovery. Express all values below as fractional non-recoverable transfer to waste streams.

WCHEM2(I,1)	=	Applies to all thorium, bred uranium, and spent uranium in fuel element crushing.
WCHEM2(I,2)	=	Applies to contents of fissile particles in first core elements only, during* primary burning.
WCHEM2(I,3)	=	Applies to contents of fissile particles in spent makeup elements only, during* primary burning.
WCHEM2(I,4)	=	Applies to contents of fissile particles in 23R elements only, during* primary burning.
WCHEM2(I,5)	=	Applies to contents of fertile particles of all element type (first core, spent makeup and 23R) during* primary burning. Does not apply to scrap recovery.
WCHEM2(I,6)	=	Applies to scrap recovery of contents in fissile particles during* primary burning.
WCHEM2(I,7)	=	Applies to scrap recovery of contents of fertile particles during* primary burning.
WCHEM2(I,8)	=	Applies to contents of fissile particles in first core elements only, during secondary burning (applicable if TRISO coated).
WCHEM2(I,9)	=	Applies to contents of fissile particles in spent makeup elements only, during secondary burning (applicable if TRISO coated).

---

*Including non-separability in gas classifier.

WCHEM2(I,10) = Applies to contents of fissile particles in 23R elements only, during secondary burning (applicable if TRISO coated).

WCHEM2(I,11) = Applies to contents of all fertile particles (except scrap) during secondary burning. (Used only if TRISO coating has been specified.)

WCHEM2(I,12) = Applies to scrap recovery of contents of TRISO-coated fissile particles during secondary burning.

WCHEM2(I,13) = Applies to scrap recovery of contents of TRISO-coated fertile particles during secondary burning.

All waste fractions below are applicable to heavy metal reclaimed in both main chemical plant and scrap recovery systems:

WCHEM2(I,14) = Applies to thorium during dissolving.

WCHEM2(I,15) = Applies to bred uranium during dissolving.

WCHEM2(I,16) = Applies to spent uranium during dissolving.

WCHEM2(I,17) = Applies to thorium during extraction, if applicable.*

WCHEM2(I,18) = Applies to bred uranium during extraction, if applicable.*

WCHEM2(I,19) = Applies to spent uranium during extraction, if applicable.*

WCHEM2(I,20) = Heavy metal waste fraction in feed preparation (prior to refabrication).

CARD 21: (6E12.5) — Reject Data for 23R Fuel Element Refabrication (Fertile particles are fabricated in fresh fuel plant.)

REJT2(I,1) = Control fuel element rejection rate (fractional).

REJT2(I,2) = Regular fuel element rejection rate (fractional).

REJT2(I,3) = Fuel rod rejection rate (fractional).

REJT2(I,4) = Fissile particle coating rejection rate (fractional).

---

*Applicability in scrap recovery depends on fissile particle specification for thorium/uranium ratio; yes for mixed kernels, and no otherwise.

REJT2(I,5) = Microsphere preparation (fissile particle) rejection rate (fractional).

CARD 22: (5I4) — Scrap Routing to Scrap Recovery System for Refabricated Fuel

Specify a 1 if scrap is to enter crushers, 2 if scrap enters primary burners (furnace), 3 if scrap enters secondary burners, and 4 if scrap enters dissolver (leacher).

NROUT(I,1) = Scrap produced in fuel element assembly.

NROUT(I,2) = Scrap produced in fuel rod manufacture (after carbonization).

NROUT(I,3) = Scrap produced in coating operation.

NROUT(I,4) = Scrap produced in microsphere preparation.

CARD 23: (3I4,5E12.5) — The 25R Fuel Specification

ICOAT4(I,1) = Fissile particle coating specification.

ICOAT4(I,2) = Fertile particle coating specification. Note: Specify BISO or TRISO coating. See instructions on card 4.

THTU5(I) = Fissile kernel Th/U weight ratio.

THTU6(I) = Thorium-to-uranium weight ratio in finished fuel element (average value).

CARD 24: (6E12.5) — Reject Data for 25R Fuel Element Refabrication (Fertile particles are fabricated in fresh fuel plant.)

REJT3(I,1) = Control fuel element rejection rate (fractional), if applicable.

REJT3(I,2) = Regular fuel element rejection rate (fractional).

REJT3(I,3) = Fuel rod rejection rate (fractional).

REJT3(I,4) = Fissile particle coating rejection rate (fractional).

REJT3(I,5) = Microsphere preparation (fissile particle) rejection rate (fractional).

CARD 25: (I4,8X,4E12.5) — Hardware Cost Data

IHWR(I) = Hardware unit cost data are referenced to this calendar year. Specify the year (i.e., 19xx).

ESCHW1(I) = Hardware unit costs are to be escalated at this annual rate from year IHWR(I) to start of history, year ISTART.

ESCHW(I) = Hardware unit costs are to be escalated at this annual rate starting in year ISTART through history of calculation.

UCCFE(I) = Unit hardware cost ($/element) for unfueled control-rod elements.

UCFE(I) = Unit hardware cost ($/element) for unfueled regular fuel element.

REPEAT THE DATA ON CARDS 1 THROUGH 25 FOR EACH REACTOR SPECIFICATION, i.e., NTYPE TIMES.

Card A1 below begins with card number 1+25*NTYPE.

Cards A1 through A5 are applicable to fresh fuel fabrication <u>only</u>.

CARD A1: (2E12.5) — Feed Preparation Waste Fractions

R1JT(1,1) = Waste fraction for enriched uranium in feed preparation, i.e., converting UF_6 to microsphere preparation feed.

R1JT(1,2) = Waste fraction for fresh thorium during feed preparation, i.e., converting to microsphere preparation feed.

The data on cards A2, A3, A4, and A5 are used to estimate inventory charges and waste charges in the fresh fuel plant. Scrap recovery of fresh fuel is presently computed by a continuous equilibrium model (i.e., similar to that shown in Fig. 14 of the text) as opposed to a batch recovery model used for the refabrication plant. Fresh fuel scrap recovery model will probably undergo future revisions; the input below is applicable only to this preliminary version of the code.

CARD A2: (6E12.5) — Thorium "Fast Scrap" Fractions

Fast scrap is that fraction of rejects produced in each fabrication process which the user believes can be recovered and refabricated into finished product during the same accounting period (year). The remaining portion (one minus the fast scrap fraction) is considered to be slow scrap and carried into the next accounting period.

FASTSC(1,1) = Applies to thorium rejected in fresh feed preparation.

FASTSC(1,2) = Applies to thorium rejected in microsphere preparation.

FASTSC(1,3) = Applies to thorium rejected in microsphere coating.

FASTSC(1,4) = Applies to thorium rejected in fuel rod manufacture.

FASTSC(1,5) = Applies to thorium rejected in fuel element assembly.

CARD A3: (6E12.5) — More "Fast Scrap" Fractions

These are applicable to uranium rejects — definition same as on card A2.

FASTSC(2,1) = Applies to enriched uranium rejected in fresh feed preparation.

FASTSC(2,2) = Applies to enriched uranium rejected in microsphere preparation.

FASTSC(2,3) = Applies to enriched uranium rejected in microsphere coating.

FASTSC(2,4) = Applies to enriched uranium rejected in fuel rod manufacture.

FASTSC(2,5) = Applies to enriched uranium rejected in fuel element assembly.

CARD A4: (6E12.5) — Thorium Scrap Recovery Waste Fractions

These are gross waste fractions and are applied to both rejects in a given accounting period, plus slow scrap from the preceding accounting period.

WASTE(1,1) = Applies to thorium rejected in fresh feed preparation.

WASTE(1,2) = Applies to thorium rejected in microsphere preparation.

WASTE(1,3) = Applies to thorium rejected in microsphere coating.

WASTE(1,4) = Applies to thorium rejected in fuel rod fabrication.

WASTE(1,5) = Applies to thorium rejected in fuel element assembly.

CARD A5: (6E12.5) — More Waste Fractions

These are applicable to uranium rejects — definition same as on card A4.

WASTE(2,1) = Applies to enriched uranium rejected in fresh feed preparation.

WASTE(2,2) = Applies to enriched uranium rejected in microsphere preparation.

WASTE(2,3) = Applies to enriched uranium rejected in microsphere coating.

WASTE(2,4) = Applies to enriched uranium rejected in fuel rod manufacture.

WASTE(2,5) = Applies to enriched uranium rejected in fuel element assembly.

THE NEXT TWO CARDS ARE INPUT DATA REQUIRED IN COMPUTING THE UNIT COSTS FOR ENRICHED URANIUM AND UNIT COSTS FOR FRESH THORIUM. SUGGEST THAT THE UNIT COST DATA BE APPLICABLE TO FIRST YEAR OF THE HISTORY AND ESCALATED ACCORDING TO INPUT ESCALATION RATES.

CARD B1: (6E12.5)

U308 = Ore cost (\$/lb U_3O_8).

UF6 = U_3O_8 to UF_6 conversion cost (\$/kg of U).

SWU = Gaseous diffusion plant enriching cost (\$/SWU).

XP = Weight fraction of ^{235}U in product from gaseous diffusion plant.

XF = Weight fraction of ^{235}U in diffusion plant feed (natural U = 0.00711).

XW = Weight fraction of ^{235}U in transaction tails.

CARD B2: (6E12.5)

EFEED = Annual cost escalation rate, fractional, to be applied to feed costs (i.e., ore plus conversion).

ESWU = Annual cost escalation rate, fractional, to be applied to enriching costs.

ETH = Annual cost escalation rate, fractional, to be applied to thorium unit costs.

CTH = Thorium unit cost (\$/kg as ThO_2).

AUC = Annual interest rate, fractional, to be applied to enriched uranium. Used in calculating inventory costs.

ATC = Annual interest rate, fractional, to be applied to fresh thorium. Used in calculating inventory costs.

THE NEXT SET OF CARDS ARE INPUT INFORMATION REQUIRED TO COMPUTE EQUIPMENT COSTS IN THE FRESH FUEL FABRICATION PLANT.

CARD C1: (E12.6)

FPLF = Plant availability factor. The number of operating days per annum is 365.25*FPLF.

CARD C2: (5I4)

IEQYR((J),J=1, M) = Plant initial construction and subsequent expansion dates. Express dates in years.

THE FOLLOWING CARDS OF THIS SET PROVIDE THE EQUIPMENT UNIT COST DATA, INFORMATION USED IN COMPUTING COMPONENTS OF OPERATING COST AND OTHER PROBLEM CONTROL INFORMATION. EACH SET OF DATA IS APPLICABLE TO A SPECIFIC FABRICATION PROCESS STARTING WITH FUEL ELEMENT ASSEMBLY, THEN FUEL ROD MANUFACTURING (EXTENT OF PRESENT VERSION). THE BASIC PLAN IS TO ALLOW A USER TO OPTIONALLY PREPARE MULTIPLE SETS OF DATA FOR A GIVEN PROCESS, EACH WITH ITS OWN ID NUMBER, FOR COSTING ALTERNATES. ALSO TO PROVIDE THE CAPABILITY FOR SUBDIVIDING EQUIPMENT IN EACH PROCESS INTO MANY SUBSYSTEMS (30 MAXIMUM).

CARD CC1: (4I4,8X,2E12.5)

NSET = Set ID number.

NSUB = Number of subsystems for this process.

IESTYR = Year (19xx) to which unit costs are to be referenced.

KIND = Specify 1 for assembly, 2 for fuel rod manufacturing — later KIND will be used to reference throughputs to alternate units, e.g., elements per unit time, rods per unit time, etc.

AFTRB = Leave blank — reserved for future use.

BLDC = Leave blank — reserved for future use.

CARD CC2: (18A4)

TITLE 1 = Name or identification of this process.

CARDS CC3+: (6E12.6/4E12.6) — Begin with First Subsystem (J=1)

FA(J) = Projected floor area (sq.ft.) required for one unit of this equipment item. Be sure to consider that this piece of equipment may or may not be stacked above another equipment item.

TP(J) = Daily unit throughput for one unit of equipment if operated at full capacity. (Units in present version are elements/day for assembly and rods/day for fuel rod mfg.)

SMC(J) = Materials cost ($) for one unit of this equipment.

XLC(J) = Labor cost ($) to manufacture one unit of this equipment.

SEC(J) = Engineering cost ($) associated with the manufacture of one unit of this equipment.

XIC(J) = Installation cost ($) required in setting up one unit of this equipment.

NOTE: The total unit costs are the sum of the above four items. Subdividing costs into these categories provides a mechanism for adjusting unit costs from prototype to mass production, assuming each cost category is known.

XCC(J) = Cost for all consumable items ($) per unit per operating day, i.e., to produce TP(J).

XSH(J) = Man-hours per operating day required to operate one unit of equipment. This entry should include total staff time devoted entirely to this equipment item to produce TP(J).

XMH(J) = Maintenance man-hours per operating day per one unit of equipment. Should be daily average including all crafts, both scheduled and unscheduled maintenance.

URF(J) = Equipment utilization factor. Set to 1.0 if left blank. The "true" throughput for this unit of equipment is the product of TP(J)*URF(J). This entry is provided to specifically account for time delays encountered by this equipment in waiting for output from other equipment in the system.

REPEAT CARD CC3, NSUB-1 TIMES TO DESCRIBE EQUIPMENT ITEMS J=2,3,....NSUB.
RETURN TO CARD CC1 AND PREPARE DATA FOR THE NEXT SET OR THE NEXT SYSTEM.

NOTE: The cost section of the code is under development. The above instructions are applicable only as of this writing. Users should obtain updated input instructions before setting up their own problem.

Appendix A

SCRAP RECOVERY MODELS FOR FABRICATION AND REFABRICATION PLANTS

In fresh fuel fabrication and in refabrication of recycle fuel there are several processes A, B, C, etc., required. Process A is the first step. Material (heavy metal) output from A is input to B, output from B is input to C, etc., on through the plant. Let us assume that material is expressed in units of kilograms of uranium, or kilograms of thorium, or kilograms of thorium plus uranium; that is, some consistent unit of mass flow. In each fabrication process assume that some amount of material is rejected, R_a, R_b, R_c, etc., from processing an initial quantity of feed, F:

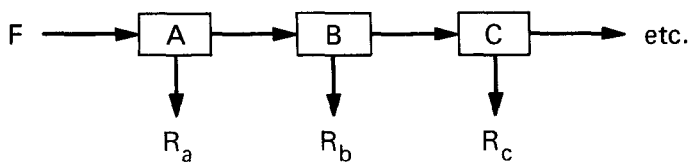

Consider fabrication process A, the first fabrication process in the series, and assume batch scrap recovery keeping each customer's fuel separated. All rejects produced in A from processing F will pass through a recovery system and the reclaimed heavy metal will be returned to A for subsequent processing. This sequence of processing and recovery is assumed to be repeated some finite number of times as indicated below:

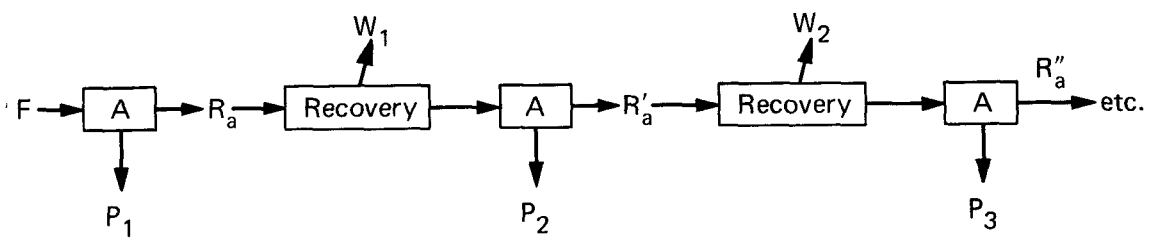

Each pass through A yields product output P_1, P_2, P_3, etc., to the next fabrication process B. Each recovery deposits W_1, W_2, etc., in the waste stream.

The mass of material passing alternately through the fabrication process and recovery system is shown schematically below:

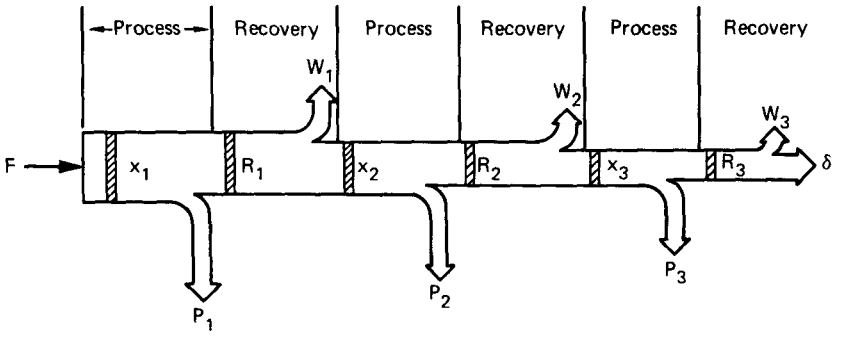

Let

$f \equiv$ fractional rejects from the process (process A),

$f_1 \equiv$ fractional waste produced in recovery.

Initially, we process $x_1 = F$; producing product, P_1:

$$P_1 = (1 - f)x_1 \ ,$$

and rejects R_1,

$$R_1 = fx_1 \ .$$

In recovery some of R_1 enters waste stream as W_1:

$$W_1 = f_1 f x_1 \ .$$

An amount x_2 reenters the fabrication process:

$$x_2 = (1 - f_1)fx_1$$

from which more finished product, P_2, results

$$P_2 = x_1 f(1 - f_1)(1 - f) \ .$$

More rejects, R_2, occur:

$$R_2 = x_1 f^2(1 - f_1) \ .$$

These rejects, R_2, are returned for recovery and the procedure above can be repeated any desired number of times. Residual heavy metal after the nth time through the scrap recovery system is δ. Note that if there were no final recovery, then $\delta = R_3$ in the figure above; if there were final

recovery, then $\delta = R_3 - W_3$. The total amount of heavy metal passing through the fabrication process, including that returned from scrap recovery, is:

$$X = x_1 + x_2 + x_3 + \ldots ,$$

$$X = x_1 \left\{ \sum_{J=0}^{N-1} f^J (1 - f_1)^J \right\} . \tag{1}$$

The total amount of heavy metal fabricated into finished product (leaving the process):

$$P = P_1 + P_2 + P_3 + \ldots ,$$

$$P = x_1 (1 - f) \left\{ \sum_{J=0}^{N-1} f^J (1 - f_1)^J \right\} . \tag{2}$$

The total amount of heavy metal rejected:

$$R = R_1 + R_2 + R_3 + \ldots ,$$

$$R = x_1 \left\{ \sum_{J=0}^{N-1} f^{(J+1)} (1 - f_1)^J \right\} . \tag{3}$$

Total amount of heavy metal entering waste stream:

$$W = W_1 + W_2 + \ldots ,$$

$$W = x_1 f_1 f \left\{ \sum_{J=0}^{N-1} f^J (1 - f_1)^J \right\} . \tag{4}$$

The residual heavy metal remaining after N times through the recovery system (assuming no final recovery):

$$\delta = R_{(N)} = x_1 f^N (1 - f_1)^N , \quad N \neq 0 . \tag{5}$$

Overall product-to-feed ratio, $F \equiv x_1$:

$$P/F = (1 - f) \left\{ \sum_{J=0}^{N-1} f^J (1 - f_1)^J \right\} . \tag{6}$$

The summation term in braces for $J \neq 0$ represents product produced from reclaimed scrap.

Multiple Processes in Scrap Recovery

In the development above, we have assumed that there is only one place in recovery in which waste, W, may be produced in reclaiming the scrap, i.e., the simple model was as shown schematically below:

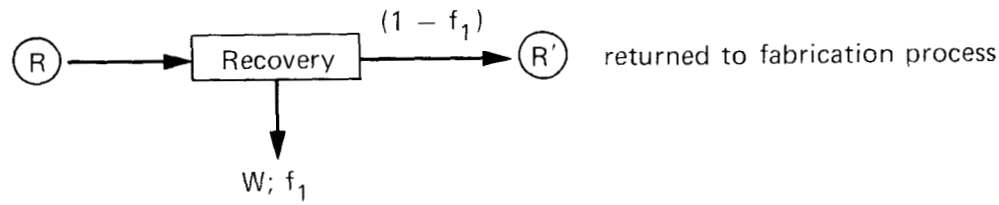

In the actual scrap recovery system there may be several recovery steps (or recovery processes), each perhaps having a waste fraction f_a, f_b, f_c, etc., from recovery steps S_1, S_2, S_3, respectively, as shown below:

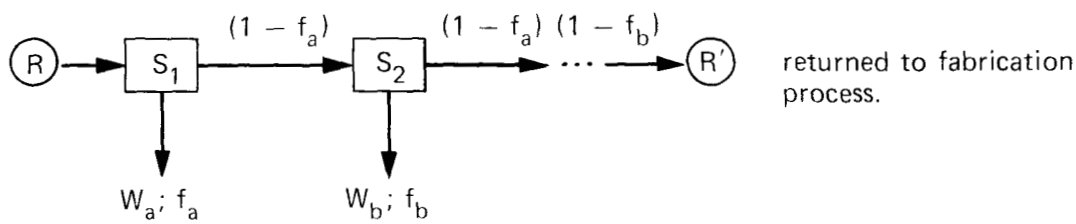

In the simple model we have:

$$R' = R(1 - f_1) \text{ and } W = R\, f_1 \ .$$

In the "actual" recovery system we have:

$$R' = R(1 - f_a)(1 - f_b)(1 - f_c) \ \ldots\ldots ,$$

$$W = R[f_a + (1 - f_a)f_b + (1 - f_a)(1 - f_b)f_c + \ldots\ldots] \ .$$

Solve for f_1 by equating the two equations above for R':

$$1 - f_1 = (1 - f_a)(1 - f_b)(1 - f_c) \ \ldots\ldots ,$$

$$f_1 = 1 - 1 + f_a + f_b + f_c + \ldots - f_a f_b - f_a f_c - f_b f_c - \ldots$$

$$+ f_a f_b f_c + \ldots$$

Solve for f_1 by equating the two equations above for W:

$$f_1 = f_a + (1 - f_a)f_b + (1 - f_a)(1 - f_b)f_c + \ldots ,$$

$$f_1 = f_a + f_b + f_c + \ldots - f_a f_b - f_a f_c - f_b f_c - \ldots + f_a f_b f_c + \ldots$$

We can compress the "actual" recovery system to the simple model by first evaluating f_1 in terms of the "actual" waste fractions (f_a, f_b, f_c, etc.). Assuming we have J scrap recovery processes and noting that the numerical index on f below are respectively equivalent to f_a, f_b, f_c, etc., then there are two defining expressions for f_1 which can be used:

$$f_1 = 1 - \prod_{i=1}^{J} (1 - f_i) \tag{7}$$

or

$$f_1 = \sum_{i=1}^{J} f_i - \sum_{k=1}^{J-1} \sum_{i=k+1}^{J} f_k f_i + \sum_{\ell=1}^{J-2} \sum_{k=\ell+1}^{J-1} \sum_{i=k+1}^{J} f_\ell f_k f_i$$

$$- \sum_{m=1}^{J-3} \sum_{\ell=m+1}^{J-2} \sum_{k=\ell+1}^{J-1} \sum_{i=k+1}^{J} f_m f_\ell f_k f_i + \ldots . \tag{8}$$

Values for f_1 computed by either Eq. (7) or Eq. (8) can be substituted into Eqs. (1) through (6) to account for multiple places in which waste can occur in scrap recovery.

The derivation above is applicable to rejects produced from a specific fabrication process requiring specific scrap recovery steps (or processes) with associated known waste fractions. Scrap recovery processes required to reclaim rejects from some other fabrication process may be somewhat different. Hence, f_1 should be calculated separately for recovery of scrap from each fabrication process in the plant.

Multiple Fabrication Processes and Multiple Recovery Processes

So far, we have only looked at the first fabrication process in the series (process A) receiving fresh feed F. We have ignored the reclaimed

scrap contribution to A from the other fabrication processes. We expand the derivation by considering some other fabrication process (the ℓth), and assume that reclaimed scrap from the ℓth process is also returned to process A as indicated below:

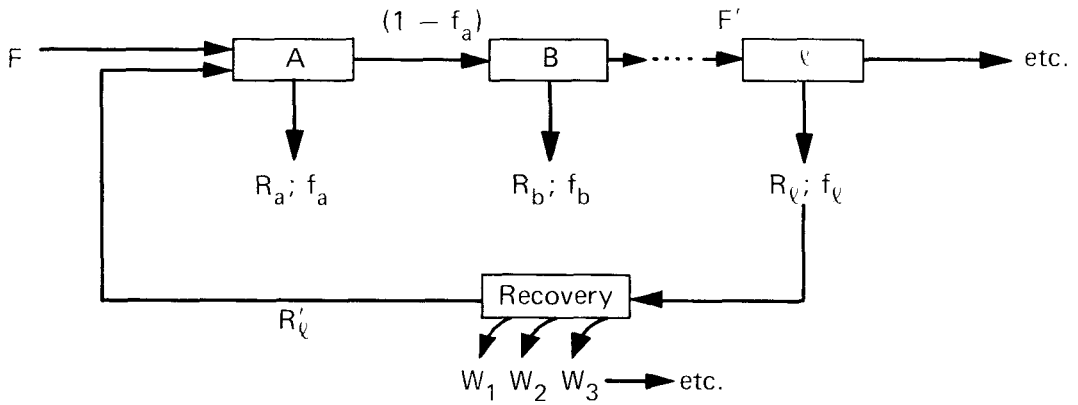

There are rejects R_a, R_b, etc., defined respectively by reject fractions f_a, f_b, etc., in fabrication processes A, B, ... preceding process ℓ. Initially, feed F enters process A and feed F' enters process ℓ, i.e.,

$$F' = F[(1 - f_a)(1 - f_b) \; \ldots .] \; .$$

Rejects R_ℓ are produced by process ℓ, and R'_ℓ is reclaimed and returned to process A. Process A then rejects $R'_\ell f_a$, process B rejects $R'_\ell(1 - f_a)f_b$, etc. The rejects so produced in A also enter scrap recovery and what returns constitute another source to A. The same is true for process B, C, D, etc., through the plant.

Let

$$\beta_b \equiv 1 - f_a \; , \qquad f_a \equiv \text{fractional rejects from process A,}$$

$$\beta_c \equiv (1 - f_a)(1 - f_b) \; , \qquad f_b \equiv \text{fractional rejects from process B.}$$

$$\vdots$$

etc.

Define

$$Z \equiv f_a(1 - f_{1_a}) + \beta_b f_b(1 - f_{1_b}) + \beta_c f_c(1 - f_{1_c}) + \ldots . \; ,$$

where f_{1_a}, f_{1_b}, f_{1_c}, ... are the effective waste fractions for scrap

recovery of rejects from A, B, C, respectively, computed by using either Eq. (7) or Eq. (8).

After M times through the scrap recovery system, the total amount of heavy metal which passed through process A, including all contributions from scrap recovery of scrap produced in A and all other processes in the plant, is:

$$X_{(A)} = F \sum_{J=0}^{M} Z^J .$$

Total heavy metal passing through the other fabrication processes are:

$$\begin{aligned} X_{(B)} &= F\,\beta_b \sum_{J=0}^{M} Z^J , \quad \text{Process B} \\ &\vdots \\ X_{(\ell)} &= F\,\beta_\ell \sum_{J=0}^{M} Z^J , \quad \text{Process } \ell \end{aligned} \tag{9}$$

The ℓth process is hereafter assumed to be the last fabrication process. Total amount of product leaving:

$$\begin{aligned} P_{(A)} &= F(1 - f_a) \sum_{J=0}^{M} Z^J , \quad \text{Process A} \\ P_{(B)} &= F\,\beta_b(1 - f_b) \sum_{J=0}^{M} Z^J , \quad \text{Process B} \\ &\vdots \\ P_{(\ell)} &= F\,\beta_\ell(1 - f_\ell) \sum_{J=0}^{M} Z^J , \quad \ell\text{th process} \end{aligned} \tag{10}$$

Total amount of rejects produced by each fabrication process:

$$R_{(A)} = F\,f_a \sum_{J=0}^{M} Z^J , \quad \text{Process A} \tag{11 contd}$$

$$R_{(B)} = F\ \beta_b f_b \sum_{J=0}^{M} Z^J\ , \quad \text{Process B}$$

$$\vdots \qquad\qquad \vdots \tag{11}$$

$$R_{(\ell)} = F\ \beta_\ell f_\ell \sum_{J=0}^{M} Z^J\ , \quad \text{Process } \ell$$

If we assume that the final step is recovery, the cumulative deposition in waste stream is:

$$W_a = W_b = \ldots. = W_\ell = 0.0\ , \qquad M=0 \text{ (no scrap recovery)}$$

$$W_a = F\ f_{1_a} f_a \sum_{J=0}^{M} Z^J\ , \qquad \text{From process A rejects } (M\neq 0)$$

$$W_b = F\ \beta_b f_{1_b} f_b \sum_{J=0}^{M} Z^J\ , \qquad \text{From process B rejects } (M\neq 0) \tag{12a}$$

$$\vdots$$

$$W_\ell = F\ \beta_\ell f_{1_\ell} f_\ell \sum_{J=0}^{M} Z^J\ , \qquad \text{From process } \ell \text{ rejects } (M\neq 0)$$

If we assume that the final step is the fabrication process, i.e., last rejects are not recovered:

$$W_a = W_b = \ldots. = W_\ell = 0.0\ , \qquad M=0 \text{ (no scrap recovery)}$$

$$W_a = F\ f_{1_a} f_a \sum_{J=0}^{M-1} Z^J\ , \qquad \text{From process A rejects } (M\neq 0)$$

$$W_b = F\ \beta_b f_{1_b} f_b \sum_{J=0}^{M-1} Z^J\ , \qquad \text{From process B rejects } (M\neq 0) \tag{12b}$$

$$\vdots$$

$$W_\ell = F\ \beta_\ell f_{1_\ell} f_\ell \sum_{J=0}^{M-1} Z^J\ , \qquad \text{From process } \ell \text{ rejects } (M\neq 0)$$

Residual heavy metal remaining after last recovery, final step is recovery:

$$\delta_{(0)} = F(f_a + \beta_b f_b + \beta_c f_c + \ldots) \ , \quad M=0 \text{ (no scrap recovery;rejects stored)} \tag{13a}$$

$$\delta_{(M)} = F\ Z^{M+1} \ , \quad M \neq 0$$

If the final step is fabrication, residual heavy metal after M recoveries is:

$$\delta = F\ Z^M[f_a + \beta_b f_b + \beta_c f_c + \ldots] \ , \quad M=0,1,2,\ldots \tag{13b}$$

Overall product-to-feed ratio is the total product leaving the ℓth fabrication process to fresh feed entering process A; M scrap recoveries:

$$\frac{P_\ell}{F_a} = \beta_\ell(1 - f_\ell) \sum_{J=0}^{M} Z^J \ . \tag{14}$$

Numerical Example 1

We have four fabrication processes A, B, C, D with reject fractions, respectively, 0.12, 0.09, 0.005 and 0.01. For each fabrication process assume four identical scrap recovery processes S_1, S_2, S_3, S_4 with waste fractions of 0.01 each.

Compute plant product/feed ratio after 0, 1, 2 and 3 scrap recoveries, and check the overall plant mass balance for agreement after the third recovery.

From Eq. (7):

$$f_{1_a} = f_{1_b} = f_{1_c} = f_{1_d} = 1 - (0.99)^4 = 0.0394 \ ,$$

$$(1 - f_{1_a}) = \ldots. = (1 - f_{1_d}) = 0.9606 \ .$$

The terms below are defined on page 68.

$$\beta_b = 0.8800 \ ; \ \beta_c = 0.8008 \ ; \ \beta_d = 0.7968 \ ; \ Z = 0.20285 \ .$$

Product/feed ratio; Eq. (14):

$$P_d/F_a = \begin{cases} 0.78883 & M=0 \\ 0.94884 & M=1 \\ 0.98130 & M=2 \\ 0.98789 & M=3 \end{cases}$$

Assuming recovery was the last step.

Waste produced in recovery (Eq. 12a; M=3,F=1):

$$W = W_a + W_b + W_c + W_d = 0.01042 \ .$$

Residual heavy (Eq. 13a; M=3,F=1):

$$\delta = Z^4 = 0.00169 \ .$$

Balance:

$$W + P_d + \delta = 1.0 \ , \quad \text{feed} = F = 1.0 \ .$$

Assuming that the fabrication process was the last step.

Waste produced in recovery (Eq. 12b; M=3,F=1):

$$W = W_a + W_b + W_c + W_d = 0.01035 \ .$$

Residual heavy (Eq. 13b; M=3,F=1):

$$\delta = 0.00176 \ .$$

Balance:

$$W + P_d + \delta = 1.0 \ , \quad \text{feed} = F = 1.0 \ .$$

Accounting for Waste Produced in Fabrication Processes

Now let us assume that we expand the model to include heavy metal entering waste during the fabrication process as well as in scrap recovery. We assume that we can have waste produced both upstream and downstream from product reject as shown:

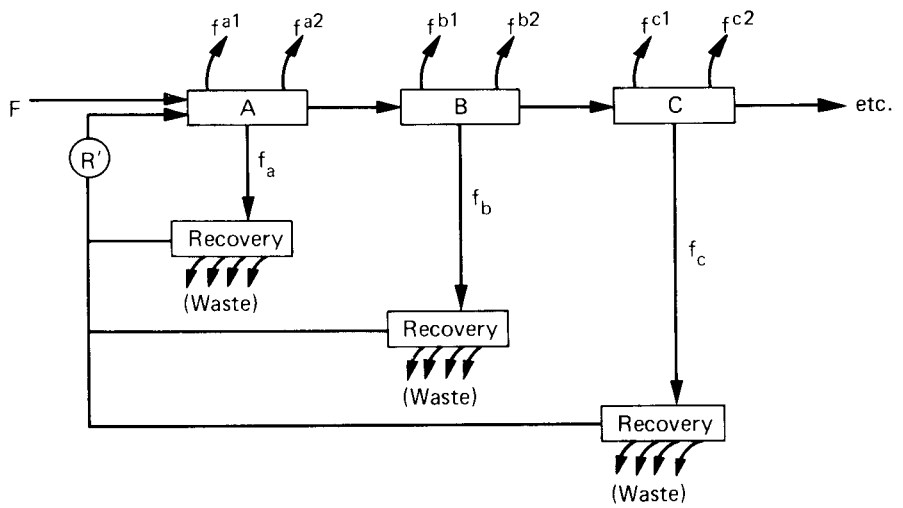

Waste fractions f^{a1} and f^{a2} apply upstream and downstream, respectively, from the rejects (f_a fractional rejects) in process A; likewise, for processes B, C, etc., throughout the plant.

Define:

$$\beta^{a1} \equiv (1 - f^{a1}) \ , \qquad \beta^{a2} \equiv (1 - f^{a2}) \ ,$$

$$\beta^{b1} \equiv (1 - f^{b1}) \ , \qquad \beta^{b2} \equiv (1 - f^{b2}) \ ,$$

$$\vdots \qquad\qquad\qquad \vdots$$

etc. etc.

$$\beta'_a = 1.0 \ ,$$

$$\beta'_b \equiv \beta^{a1}\beta^{a2}(1 - f_a) \ ,$$

$$\beta'_c \equiv \beta^{a1}\beta^{a2}\beta^{b1}\beta^{b2}(1 - f_a)(1 - f_b) \ ,$$

$$\vdots$$

etc.

$$K_a \equiv [f^{a1} + f^{a2}\beta^{a1}(1 - f_a)]\beta'_a \ ,$$

$$K_b \equiv [f^{b1} + f^{b2}\beta^{b1}(1 - f_b)]\beta'_b \ ,$$

$$\vdots$$

etc.

$$Y \equiv \beta^{a1} f_a (1 - f_{1_a}) + \beta^{b1} \beta_b' f_b (1 - f_{1_b}) + \beta^{c1} \beta_c' f_c (1 - f_{1_c}) + \ldots ,$$

where f_{1_a}, f_{1_b}, etc., are each computed by Eqs. (7) or (8).

After M times through the recovery system, the total amount of heavy metal passing through each process, including all contributions from scrap recovery of scrap produced by that process and all other processes in the plant, is:

$$\begin{aligned} X_a &= F \sum_{J=0}^{M} Y^J , && \text{Process A} \\ X_b &= F\, \beta_b' \sum_{J=0}^{M} Y^J , && \text{Process B} \\ &\vdots && \vdots \\ X_\ell &= F\, \beta_\ell' \sum_{J=0}^{M} Y^J , && \text{Process } \ell \end{aligned} \tag{15}$$

Total amount of product leaving each process:

$$\begin{aligned} P_a &= F\, \beta^{a1} \beta^{a2} (1 - f_a) \sum_{J=0}^{M} Y^J , && \text{Process A} \\ P_b &= F\, \beta_b' \beta^{b1} \beta^{b2} (1 - f_b) \sum_{J=0}^{M} Y^J , && \text{Process B} \\ &\vdots && \vdots \\ P_\ell &= F\, \beta_\ell' \beta^{\ell 1} \beta^{\ell 2} (1 - f_\ell) \sum_{J=0}^{M} Y^J , && \text{Process } \ell \end{aligned} \tag{16}$$

Total amount of rejects produced in each fabrication process:

$$R_a = F\, \beta^{a1} f_a \sum_{J=0}^{M} Y^J , \quad \text{Process A} \tag{17 contd}$$

$$R_b = F\ \beta^{b1}\beta'_b f_b \sum_{J=0}^{M} Y^J\ , \quad \text{Process B}$$
$$\vdots \qquad\qquad \vdots \tag{17}$$
$$R_\ell = F\ \beta^{\ell 1}\beta'_\ell f_\ell \sum_{J=0}^{M} Y^J\ , \quad \text{Process } \ell$$

Waste generated within each fabrication process:

$$W^*_a = F\ K_a \sum_{J=0}^{M} Y^J\ , \quad \text{Process A}$$

$$W^*_b = F\ K_b \sum_{J=0}^{M} Y^J\ , \quad \text{Process B} \tag{18}$$
$$\vdots \qquad\qquad \vdots$$
$$W^*_\ell = F\ K_\ell \sum_{J=0}^{M} Y^J\ , \quad \text{Process } \ell$$

Waste generated in the recovery system assuming that the final step is recovery:

$$W_a = W_b = \ldots = W_\ell = 0.0\ , \quad M=0 \text{ (no scrap recovery)}$$

$$W_a = F\ \beta^{a1} f_{1a} f_a \sum_{J=0}^{M} Y^J\ , \quad \text{From process A rejects } (M\neq 0)$$

$$W_b = F\ \beta^{b1}\beta'_b f_{1b} f_b \sum_{J=0}^{M} Y^J\ , \quad \text{From process B rejects } (M\neq 0) \tag{19}$$
$$\vdots \qquad\qquad \vdots$$
$$W_\ell = F\ \beta^{\ell 1}\beta'_\ell f_{1\ell} f_\ell \sum_{J=0}^{M} Y^J\ , \quad \text{From process } \ell \text{ rejects } (M\neq 0)$$

Residual heavy metal remaining after final recovery, final step is recovery:

$$\delta = F(\beta^{a1} f_a + \beta^{b1}\beta'_b f_b + \beta^{c1}\beta'_c f_c + \ldots)\ , \quad M=0 \text{ (no scrap recovery; rejects stored)}$$

$$\delta = F\ Y^{M+1}\ , \quad M\neq 0 \tag{20}$$

If we assume that the final step is the fabrication process, i.e., last rejects are not recovered, waste generated in recovery system is:

$$W_a = W_b = W_c = \ldots = W_\ell = 0.0 \ , \quad M=0 \text{ (no scrap recovery)}$$

$$W_a = F\ \beta^{a1} f_{1_a} f_a \sum_{J=0}^{M-1} Y^J \ , \qquad \text{From process A rejects } (M\neq 0)$$

$$W_b = F\ \beta^{b1} \beta_b' f_{b_1} f_b \sum_{J=0}^{M-1} Y^J \ , \qquad \text{From process B rejects } (M\neq 0) \tag{21}$$

$$\vdots$$

$$W_\ell = F\ \beta^{\ell 1} \beta_\ell' f_{\ell_1} f_\ell \sum_{J=0}^{M-1} Y^J \ , \qquad \text{From process } \ell \text{ rejects } (M\neq 0)$$

If the final step is the fabrication process, the residual heavy metal after M recoveries is:

$$\delta = F\ Y^M(\beta^{a1} f_a + \beta^{b1}\beta_b' f_b + \beta_{c_1}\beta_c' f_c + \ldots) \ , \ M=0,1,2,3 \ldots \tag{22}$$

M=0 is the condition for no scrap recovery; all rejects are stored.

The overall product-to-feed ratio, i.e., total product leaving fabrication process ℓ to fresh feed entering process A; M scrap recoveries:

$$\frac{P_\ell}{F_a} = \beta_\ell' \beta^{\ell 1} \beta^{\ell 2} (1 - f_\ell) \sum_{J=0}^{M} Y^J \ . \tag{23}$$

Numerical Example 2

Assume the same number of fabrication processes, recovery processes, same reject fractions, and waste fractions in recovery as in Numerical Example 1. Only process A is assumed to have waste losses $f^{a1} = f^{a2} = 0.01$; hence, $\beta^{a1} = \beta^{a2} = 0.99$.

Compute plant product/feed ratios after 0, 1, 2, 3 scrap recoveries and check overall balance for agreement after third recovery:

$$\beta_b' = 0.86249 \ ; \quad \beta_c' = 0.78486 \ ; \quad \beta_d' = 0.78094 \ ,$$

$K_a = 0.01871$; $K_b = K_c = K_d = 0.0$,

$f^{b1} = f^{b2} = f^{c1} = f^{c2} = f^{d1} = f^{d2} = 0.0$,

$f_{1_a} = f_{1_b} = f_{1_c} = f_{1_d} = 0.0394$; $(1 - f_{1_a}) = \ldots (1 - f_{1_d}) = 0.9606$,

$Y = 0.19996$.

Product/feed ratio (Eq. (23):

$$\frac{P_d}{F_a} = \begin{cases} 0.77313 & M=0 \\ 0.92772 & M=1 \\ 0.95863 & M=2 \\ 0.96481 & M=3 \end{cases}$$

Waste generated in fabrication process A (M=3;F=1):

$W^*_a = 0.02335..$

Assuming that recovery was the final step:

Waste generated in recovery (M=3;F=1):

$W = 0.01024$.

Residual heavy remaining (M=3;F=1):

$\delta = 0.00160$.

Balance:

$W^*_a + W + \delta + P_d = 1.0$, feed = F = 1.0 .

Appendix B

SAMPLE OUTPUT

REACTOR TYPE 3 FULTON TYPE REACTORS (1160 MWE STATION)
REJECTION RATES(FRACTIONAL)
FUEL ELEMENTS=0.010,CONTROL FUEL ELEMENTS=0.010,FUEL STICK MFG.=0.005
FUEL STICKS/CONTROL FUEL ELEMENT= 1084.0,FUEL STICKS/FUEL ELEMENT= 1962.0

	FUEL FABRICATION REQUIREMENTS FOR REACTOR REFUELING				*SPENT ELEMENTS DISCHARGED*		
YEAR	CONTROL FUEL ELEMENTS	FUEL ELEMENTS	TOTAL	TOTAL NO. OF FUEL STICKS	CONTROL FUEL ELEMENTS	FUEL ELEMENTS	TOTAL
1976	0.0	0.0	0.0	0.0	0.0	0.0	0.0
1977	0.0	0.0	0.0	0.0	0.0	0.0	0.0
1978	0.0	0.0	0.0	0.0	0.0	0.0	0.0
1979	0.0	0.0	0.0	0.0	0.0	0.0	0.0
1980	0.0	0.0	0.0	0.0	0.0	0.0	0.0
1981	0.0	0.0	0.0	0.0	0.0	0.0	0.0
1982	0.0	0.0	0.0	0.0	0.0	0.0	0.0
1983	153.5	921.2	1074.7	1983767.0	0.0	0.0	0.0
1984	452.5	2666.7	3119.2	5751291.0	152.0	912.0	1064.0
1985	743.4	4315.1	5058.6	9318796.0	448.0	2640.0	3088.0
1986	880.8	5042.4	5923.2	10902539.0	736.0	4272.0	5008.0
1987	1341.4	7806.1	9147.5	16853840.0	872.0	4992.0	5864.0
1988	1632.3	9454.5	11086.9	20421344.0	1328.0	7728.0	9056.0
1989	1923.2	11103.0	13026.3	23988848.0	1616.0	9360.0	10976.0
1990	2359.6	13575.8	15935.3	29340112.0	1904.0	10992.0	12896.0
1991	3280.8	19103.0	22383.8	41242720.0	2336.0	13440.0	15776.0
1992	4000.0	23127.3	27127.3	49961472.0	3248.0	18912.0	22160.0
1993	4727.3	27248.5	31975.8	58880256.0	3960.0	22896.0	26856.0
1994	5301.0	30448.5	35749.5	65815264.0	4680.0	26976.0	31656.0
1995	6391.9	37090.9	43482.8	80101664.0	5248.0	30144.0	35392.0

INITIAL CORE FABRICATION
INITIAL CORE TO BE COMPLETED 1 YEAR(S) PRIOR TO REACTOR STARTUP
CORE FABRICATION ASSUMED DISTRIBUTED OVER 2 YEAR(S)

				FUEL FABRICATION REQUIREMENTS FOR INITIAL CORE			
YEAR	REACTORS BUILT	CUMULATIVE NO.ON LINE	INSTALLED CAP.(MWE)	CONTROL FUEL ELEMENTS	FUEL ELEMENTS	TOTAL	TOTAL NO. OF FUEL STICKS
1976	0.0	0.0	0.0	0.0	0.0	0.0	0.0
1977	0.0	0.0	0.0	0.0	0.0	0.0	0.0
1978	0.0	0.0	0.0	0.0	0.0	0.0	0.0
1979	0.0	0.0	0.0	0.0	0.0	0.0	0.0
1980	0.0	0.0	0.0	294.9	1697.0	1991.9	3667516.0
1981	0.0	0.0	0.0	884.8	5090.9	5975.8	11002545.0
1982	0.0	0.0	0.0	1179.8	6787.9	7967.7	14670060.0
1983	1.0	1.0	1160.0	884.8	5090.9	5975.8	11002545.0
1984	2.0	3.0	3480.0	1179.8	6787.9	7967.7	14670060.0
1985	2.0	5.0	5800.0	1474.7	8484.8	9959.6	18337568.0
1986	1.0	6.0	6960.0	1179.8	6787.9	7967.7	14670060.0
1987	3.0	9.0	10440.0	1474.7	8484.8	9959.6	18337568.0
1988	2.0	11.0	12760.0	2654.5	15272.7	17927.3	33007632.0
1989	2.0	13.0	15080.0	3244.4	18666.7	21911.1	40342672.0
1990	3.0	16.0	18560.0	2949.5	16969.7	19919.2	36675136.0
1991	6.0	22.0	25520.0	2654.5	15272.7	17927.3	33007632.0
1992	5.0	27.0	31320.0	3244.4	18666.7	21911.1	40342672.0
1993	5.0	32.0	37120.0	4424.2	25454.5	29878.8	55012736.0
1994	4.0	36.0	41760.0	5014.1	28848.5	33862.6	62347776.0
1995	7.0	43.0	49880.0	5309.1	30545.5	35854.5	66015280.0

SUMMARY TABLE-REFUELING REQUIREMENTS,ALL REACTORS

	FUEL FABRICATION REQUIREMENTS FOR REACTOR REFUELING				*SPENT ELEMENTS DISCHARGED*		
YEAR	CONTROL FUEL ELEMENTS	FUEL ELEMENTS	TOTAL	TOTAL NO. OF FUEL STICKS	CONTROL FUEL ELEMENTS	FUEL ELEMENTS	TOTAL
1976	36.4	206.1	242.4	710826.7	0.0	0.0	0.0
1977	36.4	206.1	242.4	710826.7	36.0	204.0	240.0
1978	36.4	206.1	242.4	710826.7	36.0	204.0	240.0
1979	36.4	206.1	242.4	710826.7	36.0	204.0	240.0
1980	42.4	242.4	284.8	835656.9	36.0	204.0	240.0
1981	149.5	804.0	953.5	2013206.0	42.0	240.0	282.0
1982	149.5	804.0	953.5	2013206.0	148.0	796.0	944.0
1983	416.2	2323.2	2739.4	5299356.0	148.0	796.0	944.0
1984	707.1	4004.0	4711.1	8930604.0	412.0	2300.0	2712.0
1985	1006.1	5717.2	6723.2	12634385.0	700.0	3964.0	4664.0
1986	1343.4	7612.1	8955.5	16785024.0	996.0	5660.0	6656.0
1987	1806.1	10404.0	12210.1	22747776.0	1330.0	7536.0	8866.0
1988	2290.9	13183.8	15474.7	28757360.0	1788.0	10300.0	12088.0
1989	2969.7	17159.6	20129.3	37336480.0	2268.0	13052.0	15320.0
1990	3826.3	22088.9	25915.1	47989520.0	2940.0	16988.0	19928.0
1991	4731.3	27551.5	32282.8	59747056.0	3788.0	21868.0	25656.0
1992	5626.3	32614.1	38240.4	70751344.0	4684.0	27276.0	31960.0
1993	6533.3	37830.3	44363.6	81978592.0	5570.0	32288.0	37858.0
1994	7575.8	43745.4	51321.2	94778064.0	6468.0	37452.0	43920.0
1995	8626.3	50193.9	58820.2	108636064.0	7500.0	43308.0	50808.0

				FUEL FABRICATION REQUIREMENTS FOR INITIAL CORE			
YEAR	REACTORS BUILT	CUMULATIVE NO.ON LINE	INSTALLED CAP.(MWE)	CONTROL FUEL ELEMENTS	FUEL ELEMENTS	TOTAL	TOTAL NO. OF FUEL STICKS
1976	1.0	1.0	330.0	0.0	0.0	0.0	0.0
1977	0.0	1.0	330.0	0.0	0.0	0.0	0.0
1978	0.0	1.0	330.0	222.2	1163.6	1385.9	2536625.0
1979	0.0	1.0	330.0	222.2	1163.6	1385.9	2536625.0
1980	0.0	1.0	330.0	517.2	2860.6	3377.8	6204141.0
1981	1.0	2.0	1100.0	1107.1	6254.5	7361.6	13539170.0
1982	0.0	2.0	1100.0	1179.8	6787.9	7967.7	14670060.0
1983	2.0	4.0	3030.0	1276.8	7418.2	8694.9	16018573.0
1984	2.0	6.0	5350.0	1571.7	9115.1	10686.9	19686080.0
1985	2.0	8.0	7670.0	1866.7	10812.1	12678.8	23353584.0
1986	2.0	10.0	10330.0	2355.6	13769.7	16125.2	29718128.0
1987	3.0	13.0	13810.0	3042.4	17793.9	20836.4	38401680.0
1988	3.0	16.0	17630.0	3438.4	19927.3	23365.6	43039680.0
1989	4.0	20.0	22950.0	3636.4	20993.9	24630.3	45358688.0
1990	5.0	25.0	29430.0	3733.3	21624.2	25357.6	46707184.0
1991	6.0	31.0	36390.0	3830.3	22254.5	26084.8	48055712.0
1992	6.0	37.0	43690.0	4028.3	23321.2	27349.5	50374720.0
1993	6.0	43.0	50990.0	4424.2	25454.5	29878.8	55012736.0
1994	6.0	49.0	58630.0	5014.1	28848.5	33862.6	62347776.0
1995	7.0	56.0	66750.0	5309.1	30545.5	35854.5	66015280.0

SUMMARY TABLE-FUEL ELEMENTS AND FUEL INVENTORIES DISCHARGED TO HEAD END REPROCESSING

	....THORIUM....		....BRED URANIUM....		....SPENT MAKEUP....	
YEAR	ANNUAL (KG/YR)	CUMULATIVE (KG)	ANNUAL (KG/YR)	CUMULATIVE (KG)	ANNUAL (KG/YR)	CUMULATIVE (KG)
1976	0.0	0.0	0.0	0.0	0.0	0.0
1977	2248.8	2248.8	36.2	36.2	62.5	62.5
1978	2183.3	4432.1	55.7	91.9	47.7	110.2
1979	2141.5	6573.6	67.6	159.5	39.4	149.6
1980	2100.8	8674.4	75.4	234.9	34.0	183.6
1981	2235.4	10909.8	79.9	314.8	62.8	246.4
1982	8469.2	19378.9	173.8	488.7	236.0	482.4
1983	8278.0	27656.9	230.6	719.3	192.6	675.0
1984	24727.2	52384.1	532.4	1251.7	629.0	1304.0
1985	42512.3	94896.4	972.9	2224.6	1028.3	2332.4
1986	59749.2	154645.6	1502.3	3726.9	1419.5	3751.8
1987	79289.7	233935.3	2134.2	5861.1	1779.9	5531.7
1988	106773.5	340708.8	2939.8	8800.9	2491.0	8022.7
1989	133914.4	474623.2	3785.8	12586.7	3185.3	11208.0
1990	173767.9	648391.1	4895.9	17482.7	4201.9	15409.9
1991	223362.8	871753.9	6328.2	23810.8	5405.0	20814.9
1992	276860.4	1148614.0	8021.3	31832.1	6703.3	27518.3
1993	326157.3	1474771.0	10383.4	42215.6	6699.0	34217.3
1994	375633.0	1850404.0	12305.9	54521.4	7629.0	41846.3
1995	431439.8	2281843.0	14524.8	69046.3	8620.3	50466.6

		...TOTAL HEAVY METAL...		FISSION PRODUCT DECAY HEAT(KW)*	
YEAR	CUMULATIVE ELEMENTS	ANNUAL (KG/YR)	CUMULATIVE (KG)	WITHOUT REPROCESSING	W/ANNUAL REPROCESSING
1976	0.0	0.0	0.0	0.0	0.0
1977	240.0	2347.5	2347.5	89.6	89.6
1978	480.0	2286.7	4634.2	142.6	118.3
1979	720.0	2248.5	6882.7	187.7	134.9
1980	960.0	2210.2	9092.9	228.7	146.3
1981	1242.0	2378.2	11471.0	294.2	182.0
1982	2186.0	8878.9	20350.0	646.1	492.9
1983	3130.0	8701.2	29051.2	867.8	599.0
1984	5842.0	25888.7	54939.9	1912.8	1516.1
1985	10506.0	44513.5	99453.3	3517.1	2758.7
1986	17162.0	62671.0	162124.3	5611.5	4212.8
1987	26028.0	83203.8	245328.1	8179.7	5835.1
1988	38116.0	112204.3	357532.3	11725.7	8122.9
1989	53436.0	140885.4	498417.8	15793.4	10475.8
1990	73364.0	182865.8	681283.5	20970.3	13570.4
1991	99020.0	235095.9	916379.4	27505.3	17504.5
1992	130980.0	291585.0	1207964.0	35461.1	22175.3
1993	168838.0	343239.7	1551203.0	44069.4	26691.2
1994	212758.0	395567.9	1946770.0	53511.9	31451.7
1995	263566.0	454584.9	2401354.0	64109.2	36763.5

* THESE DATA APPLY TO THE ON-SITE FUEL ELEMENT STORAGE FACILITY.
ASSUMED 90 DAYS COOLING AT REACTOR SITE

REACTOR TYPE 3 FULTON TYPE REACTORS (1160 MWE STATION) TABLE 1 OF 4

BRED URANIUM BALANCE IN CHEMICAL REPROCESSING PLANT
REPROCESSING ASSUMED TO BEGIN IN 1988

KILOGRAMS BRED URANIUM ENTERING PROCESS(EXCLUDING RECYCLED SCRAP)

YEAR	CRUSHERS	P.BURNER	S.BURNER	DISSOLVER	SOLVENT EXT.	FEED PREP.
1976	0.0	0.0	0.0	0.0	0.0	0.0
1977	0.0	0.0	0.0	0.0	0.0	0.0
1978	0.0	0.0	0.0	0.0	0.0	0.0
1979	0.0	0.0	0.0	0.0	0.0	0.0
1980	0.0	0.0	0.0	0.0	0.0	0.0
1981	0.0	0.0	0.0	0.0	0.0	0.0
1982	0.0	0.0	0.0	0.0	0.0	0.0
1983	0.0	0.0	0.0	0.0	0.0	0.0
1984	0.0	0.0	0.0	0.0	0.0	0.0
1985	0.0	0.0	0.0	0.0	0.0	0.0
1986	0.0	0.0	0.0	0.0	0.0	0.0
1987	0.0	0.0	0.0	0.0	0.0	0.0
1988	5346.4	5343.7	0.0	5236.8	5234.2	5181.8
1989	2741.0	2739.7	0.0	2684.9	2683.5	2656.7
1990	3301.5	3299.9	0.0	3233.9	3232.3	3199.9
1991	4036.9	4034.8	0.0	3954.1	3952.2	3912.6
1992	5349.0	5346.4	0.0	5239.4	5236.8	5184.4
1993	7208.1	7204.5	1073.0	7049.6	7046.1	6975.6
1994	8758.6	8754.3	1267.0	8566.5	8562.2	8476.6
1995	10157.6	10152.5	1539.1	9934.1	9929.1	9829.8

URANIUM LOST TO WASTE (KG/YR.) FROM RESPT.PROCESS ABOVE

1976	0.0	0.0	0.0	0.0	0.0	0.0
1977	0.0	0.0	0.0	0.0	0.0	0.0
1978	0.0	0.0	0.0	0.0	0.0	0.0
1979	0.0	0.0	0.0	0.0	0.0	0.0
1980	0.0	0.0	0.0	0.0	0.0	0.0
1981	0.0	0.0	0.0	0.0	0.0	0.0
1982	0.0	0.0	0.0	0.0	0.0	0.0
1983	0.0	0.0	0.0	0.0	0.0	0.0
1984	0.0	0.0	0.0	0.0	0.0	0.0
1985	0.0	0.0	0.0	0.0	0.0	0.0
1986	0.0	0.0	0.0	0.0	0.0	0.0
1987	0.0	0.0	0.0	0.0	0.0	0.0
1988	2.7	106.9	0.0	2.6	52.3	2.6
1989	1.4	54.8	0.0	1.3	26.8	1.3
1990	1.7	66.0	0.0	1.6	32.3	1.6
1991	2.0	80.7	0.0	2.0	39.5	2.0
1992	2.7	106.9	0.0	2.6	52.4	2.6
1993	3.6	144.1	10.7	3.5	70.5	3.5
1994	4.4	175.1	12.7	4.3	85.6	4.2
1995	5.1	203.1	15.4	5.0	99.3	4.9

WASTE FRAC.=0.0005	0.0200	0.0100	0.0005	0.0100	0.0005

REACTOR TYPE 3 FULTON TYPE REACTORS (1160 MWE STATION) TABLE 2 OF 4

KILOGRAMS BRED URANIUM FROM RECYCLED SCRAP ENTERING EACH PROCESS
GROSS SCRAP FROM REFAB.PLANT ASSUMED RECYCLED 4 TIMES/YR.

YEAR	CRUSHERS	P.BURNER	S.BURNER	DISSOLVER	SOLVENT EXT.	FEED PREP.
1976	0.0	0.0	0.0	0.0	0.0	0.0
1977	0.0	0.0	0.0	0.0	0.0	0.0
1978	0.0	0.0	0.0	0.0	0.0	0.0
1979	0.0	0.0	0.0	0.0	0.0	0.0
1980	0.0	0.0	0.0	0.0	0.0	0.0
1981	0.0	0.0	0.0	0.0	0.0	0.0
1982	0.0	0.0	0.0	0.0	0.0	0.0
1983	0.0	0.0	0.0	0.0	0.0	0.0
1984	0.0	0.0	0.0	0.0	0.0	0.0
1985	0.0	0.0	0.0	0.0	0.0	0.0
1986	0.0	0.0	0.0	0.0	0.0	0.0
1987	0.0	0.0	0.0	0.0	0.0	0.0
1988	76.9	2270.1	1182.0	2202.4	0.0	2201.3
1989	40.1	1182.2	621.5	1147.0	0.0	1146.4
1990	47.8	1411.4	738.0	1369.3	0.0	1368.7
1991	58.5	1725.5	902.1	1674.1	0.0	1673.2
1992	77.4	2285.2	1194.4	2217.1	0.0	2216.0
1993	104.2	3074.4	1606.8	2982.8	0.0	2981.3
1994	126.7	3738.3	1954.6	3626.9	0.0	3625.1
1995	146.9	4336.5	2267.8	4207.3	0.0	4205.2

URANIUM LOST TO WASTE (KG/YR.) FROM RESPT.PROCESS ABOVE

1976	0.0	0.0	0.0	0.0	0.0	0.0
1977	0.0	0.0	0.0	0.0	0.0	0.0
1978	0.0	0.0	0.0	0.0	0.0	0.0
1979	0.0	0.0	0.0	0.0	0.0	0.0
1980	0.0	0.0	0.0	0.0	0.0	0.0
1981	0.0	0.0	0.0	0.0	0.0	0.0
1982	0.0	0.0	0.0	0.0	0.0	0.0
1983	0.0	0.0	0.0	0.0	0.0	0.0
1984	0.0	0.0	0.0	0.0	0.0	0.0
1985	0.0	0.0	0.0	0.0	0.0	0.0
1986	0.0	0.0	0.0	0.0	0.0	0.0
1987	0.0	0.0	0.0	0.0	0.0	0.0
1988	0.0	45.4	11.8	1.1	0.0	1.1
1989	0.0	23.6	6.2	0.6	0.0	0.6
1990	0.0	28.2	7.4	0.7	0.0	0.7
1991	0.0	34.5	9.0	0.8	0.0	0.8
1992	0.0	45.7	11.9	1.1	0.0	1.1
1993	0.1	61.5	16.1	1.5	0.0	1.5
1994	0.1	74.8	19.5	1.8	0.0	1.8
1995	0.1	86.7	22.7	2.1	0.0	2.1
WASTE FRAC.=	0.0005	0.0200	0.0100	0.0005	0.0100	0.0005

REACTOR TYPE 3 FULTON TYPE REACTORS (1160 MWE STATION) TABLE 3 OF 4

BRED URANIUM BALANCE IN REFABRICATION PLANT
KG ENTERING PROCESS PER YEAR EXCLUSIVE OF RECYCLED SCRAP

YEAR	MICROSPHERE PREPARATION (TH-U MIX.)	MICROSPHERE PREPARATION (U ONLY)	MICROSPHERE COATING (TRISO)	MICROSPHERE COATING (BISO)	FUEL ROD FAB.	BLOCK ASSEMBLY	PRODUCT TO REACTORS
1976	0.0	0.0	0.0	0.0	0.0	0.0	0.0
1977	0.0	0.0	0.0	0.0	0.0	0.0	0.0
1978	0.0	0.0	0.0	0.0	0.0	0.0	0.0
1979	0.0	0.0	0.0	0.0	0.0	0.0	0.0
1980	0.0	0.0	0.0	0.0	0.0	0.0	0.0
1981	0.0	0.0	0.0	0.0	0.0	0.0	0.0
1982	0.0	0.0	0.0	0.0	0.0	0.0	0.0
1983	0.0	0.0	0.0	0.0	0.0	0.0	0.0
1984	0.0	0.0	0.0	0.0	0.0	0.0	0.0
1985	0.0	0.0	0.0	0.0	0.0	0.0	0.0
1986	0.0	0.0	0.0	0.0	0.0	0.0	0.0
1987	0.0	0.0	0.0	0.0	0.0	0.0	0.0
1988	0.0	5179.2	4428.3	0.0	3631.2	3613.0	3576.9
1989	0.0	2655.4	2270.3	0.0	1861.7	1852.4	1833.8
1990	0.0	3198.3	2734.6	0.0	2242.4	2231.1	2208.8
1991	0.0	3910.7	3343.6	0.0	2741.8	2728.1	2700.8
1992	0.0	5181.8	4430.5	0.0	3633.0	3614.8	3578.7
1993	0.0	6972.2	5961.2	0.0	4888.2	4863.7	4815.1
1994	0.0	8472.3	7243.9	0.0	5940.0	5910.3	5851.2
1995	0.0	9824.9	8400.3	0.0	6888.2	6853.8	6785.3

URANIUM RECLAIMED FROM RECYCLING SCRAP

YEAR	MICROSPHERE PREPARATION (TH-U MIX.)	MICROSPHERE PREPARATION (U ONLY)	MICROSPHERE COATING (TRISO)	MICROSPHERE COATING (BISO)	FUEL ROD FAB.	BLOCK ASSEMBLY	PRODUCT TO REACTORS	SLOW SCRAP	CUMULATIVE STORED
1976	0.0	0.0	0.0	0.0	0.0	0.0	0.0	0.0	0.0
1977	0.0	0.0	0.0	0.0	0.0	0.0	0.0	0.0	0.0
1978	0.0	0.0	0.0	0.0	0.0	0.0	0.0	0.0	0.0
1979	0.0	0.0	0.0	0.0	0.0	0.0	0.0	0.0	0.0
1980	0.0	0.0	0.0	0.0	0.0	0.0	0.0	0.0	0.0
1981	0.0	0.0	0.0	0.0	0.0	0.0	0.0	0.0	0.0
1982	0.0	0.0	0.0	0.0	0.0	0.0	0.0	0.0	0.0
1983	0.0	0.0	0.0	0.0	0.0	0.0	0.0	0.0	0.0
1984	0.0	0.0	0.0	0.0	0.0	0.0	0.0	0.0	0.0
1985	0.0	0.0	0.0	0.0	0.0	0.0	0.0	0.0	0.0
1986	0.0	0.0	0.0	0.0	0.0	0.0	0.0	0.0	0.0
1987	0.0	0.0	0.0	0.0	0.0	0.0	0.0	0.0	0.0
1988	0.0	2200.2	1881.2	0.0	1542.6	1534.9	1519.5	13.0	0.0
1989	0.0	1145.8	979.7	0.0	803.3	799.3	791.3	6.7	0.0
1990	0.0	1368.0	1169.6	0.0	959.1	954.3	944.7	8.1	0.0
1991	0.0	1672.4	1429.9	0.0	1172.5	1166.6	1155.0	9.8	0.0
1992	0.0	2214.8	1893.7	0.0	1552.8	1545.1	1529.6	13.0	0.0
1993	0.0	2979.8	2547.7	0.0	2089.1	2078.7	2057.9	17.5	0.0
1994	0.0	3623.3	3097.9	0.0	2540.3	2527.6	2502.3	21.3	0.0
1995	0.0	4203.1	3593.6	0.0	2946.8	2932.0	2902.7	24.7	0.0

REACTOR TYPE 3 FULTON TYPE REACTORS (1160 MWE STATION) TABLE 4 OF 4

THORIUM BALANCE IN CHEMICAL REPROCESSING PLANT-SCRAP RECOVERY
(DATA APPLY ONLY TO REFAB.ELEMENTS LOADED WITH RECY.BRED U)

YEAR	....KILOGRAMS OF THORIUM ENTERING EACH PROCESS.... CRUSHERS	P.BURNER	S.BURNER	DISSOLVER	SOLV.EXT.	TOTAL THORIUM WASTE FROM PROCESSING PARTICLE TYPE FISSILE	FERTILE	TO STORAGE OR RECYCLE
1976	0.0	0.0	0.0	0.0	0.0	0.0	0.0	0.0
1977	0.0	0.0	0.0	0.0	0.0	0.0	0.0	0.0
1978	0.0	0.0	0.0	0.0	0.0	0.0	0.0	0.0
1979	0.0	0.0	0.0	0.0	0.0	0.0	0.0	0.0
1980	0.0	0.0	0.0	0.0	0.0	0.0	0.0	0.0
1981	0.0	0.0	0.0	0.0	0.0	0.0	0.0	0.0
1982	0.0	0.0	0.0	0.0	0.0	0.0	0.0	0.0
1983	0.0	0.0	0.0	0.0	0.0	0.0	0.0	0.0
1984	0.0	0.0	0.0	0.0	0.0	0.0	0.0	0.0
1985	0.0	0.0	0.0	0.0	0.0	0.0	0.0	0.0
1986	0.0	0.0	0.0	0.0	0.0	0.0	0.0	0.0
1987	0.0	0.0	0.0	0.0	0.0	0.0	0.0	0.0
1988	769.1	768.7	0.0	753.3	0.0	0.0	16.1	753.0
1989	400.5	400.3	0.0	392.3	0.0	0.0	8.4	392.1
1990	478.2	477.9	0.0	468.4	0.0	0.0	10.0	468.1
1991	584.6	584.3	0.0	572.6	0.0	0.0	12.3	572.3
1992	774.2	773.8	0.0	758.3	0.0	0.0	16.2	758.0
1993	1041.6	1041.1	0.0	1020.2	0.0	0.0	21.9	1019.7
1994	1266.5	1265.9	0.0	1240.6	0.0	0.0	26.6	1239.9
1995	1469.2	1468.4	0.0	1439.1	0.0	0.0	30.8	1438.4

FRESH(OR SCRAP RECLAIMED)THORIUM BALANCE IN REFABRICATION PLANT,KG-ELEMENTS CONTAINING BRED URANIUM ONLY**

YEAR	.....FISSILE PARTICLES..... KERNEL PREP. (FEED)	MICROSPHERE COATING (TRISO)	(BISO)	..FUEL ROD MANUFACTURE.. FERT.PART. (FEED)	IN FISS. PARTICLE	FUEL ELEM. ASSEMBLY (TOTAL)	SLOW SCRAP	ACCUM.IN NON-RECY. SCRAP	TOTAL TO REACTORS
1976	0.0	0.0	0.0	0.0	0.0	0.0	0.0	0.0	0.0
1977	0.0	0.0	0.0	0.0	0.0	0.0	0.0	0.0	0.0
1978	0.0	0.0	0.0	0.0	0.0	0.0	0.0	0.0	0.0
1979	0.0	0.0	0.0	0.0	0.0	0.0	0.0	0.0	0.0
1980	0.0	0.0	0.0	0.0	0.0	0.0	0.0	0.0	0.0
1981	0.0	0.0	0.0	0.0	0.0	0.0	0.0	0.0	0.0
1982	0.0	0.0	0.0	0.0	0.0	0.0	0.0	0.0	0.0
1983	0.0	0.0	0.0	0.0	0.0	0.0	0.0	0.0	0.0
1984	0.0	0.0	0.0	0.0	0.0	0.0	0.0	0.0	0.0
1985	0.0	0.0	0.0	0.0	0.0	0.0	0.0	0.0	0.0
1986	0.0	0.0	0.0	0.0	0.0	0.0	0.0	0.0	0.0
1987	0.0	0.0	0.0	0.0	0.0	0.0	0.0	0.0	0.0
1988	0.0	0.0	0.0	51737.5	0.0	51478.8	4.4	0.0	50964.0
1989	0.0	0.0	0.0	26650.1	0.0	26516.8	2.3	0.0	26251.6
1990	0.0	0.0	0.0	32014.5	0.0	31854.4	2.7	0.0	31535.8
1991	0.0	0.0	0.0	39142.8	0.0	38947.1	3.3	0.0	38557.6
1992	0.0	0.0	0.0	51858.1	0.0	51598.8	4.4	0.0	51082.8
1993	0.0	0.0	0.0	69773.0	0.0	69424.2	5.9	0.0	68729.9
1994	0.0	0.0	0.0	84802.4	0.0	84378.4	7.2	0.0	83534.6
1995	0.0	0.0	0.0	98349.9	0.0	97858.2	8.4	0.0	96879.6

SUMMARY TABLE - ALL REACTORS (INCLUDING SCRAP RECOVERY)

BRED URANIUM BALANCE IN REPROCESSING PLANT - KILOGRAMS TO EACH PROCESS BELOW

YEAR	CRUSHERS	P.BURNER	S.BURNER	DISSOLVER	SOLV.EXT.	FEED PREP.	WASTE
1976	0.0	0.0	0.0	0.0	0.0	0.0	0.0
1977	0.0	0.0	0.0	0.0	0.0	0.0	0.0
1978	0.0	0.0	0.0	0.0	0.0	0.0	0.0
1979	0.0	0.0	0.0	0.0	0.0	0.0	0.0
1980	0.0	0.0	0.0	0.0	0.0	0.0	0.0
1981	0.0	0.0	0.0	0.0	0.0	0.0	0.0
1982	0.0	0.0	0.0	0.0	0.0	0.0	0.0
1983	0.0	0.0	0.0	0.0	0.0	0.0	0.0
1984	0.0	0.0	0.0	0.0	0.0	0.0	0.0
1985	0.0	0.0	0.0	0.0	0.0	0.0	0.0
1986	0.0	0.0	0.0	0.0	0.0	0.0	0.0
1987	0.0	0.0	0.0	0.0	0.0	0.0	0.0
1988	8927.4	12530.0	2730.3	12235.0	8608.4	12142.8	380.6
1989	3841.3	5421.2	928.9	5296.1	3705.7	5256.4	162.0
1990	4966.8	6985.3	1160.1	6824.4	4792.6	6773.1	208.5
1991	6419.8	9028.6	1479.8	8820.9	6194.7	8754.5	269.3
1992	8137.4	11444.7	1858.3	11181.6	7852.4	11097.5	341.2
1993	10533.5	14808.1	3856.9	14453.1	10150.1	14344.3	455.9
1994	12483.8	17552.1	4718.1	17129.9	12028.0	17001.0	541.8
1995	14734.8	20716.2	5787.8	20215.7	14194.6	20063.6	641.7

BRED URANIUM BALANCE IN REFABRICATION PLANT - KILOGRAMS TO EACH PROCESS BELOW

YEAR	MICROSPHERE PREPARATION (TH-U MIX.)	MICROSPHERE PREPARATION (U ONLY)	MICROSPHERE COATING (TRISO)	MICROSPHERE COATING (BISO)	FUEL ROD FAB.	BLOCK ASSEMBLY	PRODUCT TO REACTORS	SLOW SCRAP	CUMULATIVE STORED
1976	0.0	0.0	0.0	0.0	0.0	0.0	0.0	0.0	0.0
1977	0.0	0.0	0.0	0.0	0.0	0.0	0.0	0.0	0.0
1978	0.0	0.0	0.0	0.0	0.0	0.0	0.0	0.0	0.0
1979	0.0	0.0	0.0	0.0	0.0	0.0	0.0	0.0	0.0
1980	0.0	0.0	0.0	0.0	0.0	0.0	0.0	0.0	0.0
1981	0.0	0.0	0.0	0.0	0.0	0.0	0.0	0.0	0.0
1982	0.0	0.0	0.0	0.0	0.0	0.0	0.0	0.0	0.0
1983	0.0	0.0	0.0	0.0	0.0	0.0	0.0	0.0	0.0
1984	0.0	0.0	0.0	0.0	0.0	0.0	0.0	0.0	0.0
1985	0.0	0.0	0.0	0.0	0.0	0.0	0.0	0.0	0.0
1986	0.0	0.0	0.0	0.0	0.0	0.0	0.0	0.0	0.0
1987	0.0	0.0	0.0	0.0	0.0	0.0	0.0	0.0	0.0
1988	0.0	12136.7	10376.9	0.0	8509.0	8466.5	8381.8	21.3	0.0
1989	0.0	5253.8	4492.0	0.0	3683.4	3665.0	3628.3	9.3	0.0
1990	0.0	6769.7	5788.1	0.0	4746.2	4722.5	4675.3	11.9	0.0
1991	0.0	8750.1	7481.4	0.0	6134.7	6104.0	6043.0	15.4	0.0
1992	0.0	11091.9	9483.6	0.0	7776.5	7737.7	7660.3	19.6	0.0
1993	0.0	14337.2	12258.3	0.0	10051.8	10001.5	9901.5	25.3	0.0
1994	0.0	16992.5	14528.6	0.0	11913.4	11853.9	11735.3	30.0	0.0
1995	0.0	20053.6	17145.8	0.0	14059.6	13989.3	13849.4	35.4	0.0

SUMMARY TABLE-FRESH THORIUM REQUIRED IN REFAB.OF BRED U ELEMENTS,INCLUDING SCRAP RECOVERY

THORIUM BALANCE IN CHEMICAL REPROCESSING PLANT-SCRAP RECOVERY
(DATA APPLY ONLY TO REFAB.ELEMENTS LOADED WITH RECY.BRED U)

YEAR	....KILOGRAMS OF THORIUM ENTERING EACH PROCESS.... CRUSHERS	P.BURNER	S.BURNER	DISSOLVER	SOLV.EXT.	TOTAL THORIUM WASTE FROM PROCESSING PARTICLE TYPE FISSILE	FERTILE	TO STORAGE OR RECYCLE
1976	0.0	0.0	0.0	0.0	0.0	0.0	0.0	0.0
1977	0.0	0.0	0.0	0.0	0.0	0.0	0.0	0.0
1978	0.0	0.0	0.0	0.0	0.0	0.0	0.0	0.0
1979	0.0	0.0	0.0	0.0	0.0	0.0	0.0	0.0
1980	0.0	0.0	0.0	0.0	0.0	0.0	0.0	0.0
1981	0.0	0.0	0.0	0.0	0.0	0.0	0.0	0.0
1982	0.0	0.0	0.0	0.0	0.0	0.0	0.0	0.0
1983	0.0	0.0	0.0	0.0	0.0	0.0	0.0	0.0
1984	0.0	0.0	0.0	0.0	0.0	0.0	0.0	0.0
1985	0.0	0.0	0.0	0.0	0.0	0.0	0.0	0.0
1986	0.0	0.0	0.0	0.0	0.0	0.0	0.0	0.0
1987	0.0	0.0	0.0	0.0	0.0	0.0	0.0	0.0
1988	1264.9	1264.2	112.0	1237.8	0.0	0.0	27.7	1237.2
1989	554.7	554.4	10.4	543.3	0.0	0.0	11.7	543.0
1990	708.7	708.3	9.6	694.1	0.0	0.0	15.0	693.7
1991	916.0	915.5	9.6	897.1	0.0	0.0	19.3	896.6
1992	1161.2	1160.6	9.6	1137.3	0.0	0.0	24.5	1136.7
1993	1500.8	1500.1	11.2	1469.9	0.0	0.0	31.6	1469.2
1994	1779.5	1778.6	9.6	1742.9	0.0	0.0	37.4	1742.0
1995	2100.1	2099.0	11.6	2056.9	0.0	0.0	44.2	2055.9

FRESH(OR SCRAP RECLAIMED)THORIUM BALANCE IN REFABRICATION PLANT,KG-ELEMENTS CONTAINING BRED URANIUM ONLY**

YEAR	.....FISSILE PARTICLES..... KERNEL PREP. (FEED)	MICROSPHERE COATING (TRISO)	(BISO)	..FUEL ROD MANUFACTURE.. FERT.PART. (FEED)	IN FISS. PARTICLE	FUEL ELEM. ASSEMBLY (TOTAL)	SLOW SCRAP	ACCUM.IN NON-RECY. SCRAP	TOTAL TO REACTORS
1976	0.0	0.0	0.0	0.0	0.0	0.0	0.0	0.0	0.0
1977	0.0	0.0	0.0	0.0	0.0	0.0	0.0	0.0	0.0
1978	0.0	0.0	0.0	0.0	0.0	0.0	0.0	0.0	0.0
1979	0.0	0.0	0.0	0.0	0.0	0.0	0.0	0.0	0.0
1980	0.0	0.0	0.0	0.0	0.0	0.0	0.0	0.0	0.0
1981	0.0	0.0	0.0	0.0	0.0	0.0	0.0	0.0	0.0
1982	0.0	0.0	0.0	0.0	0.0	0.0	0.0	0.0	0.0
1983	0.0	0.0	0.0	0.0	0.0	0.0	0.0	0.0	0.0
1984	0.0	0.0	0.0	0.0	0.0	0.0	0.0	0.0	0.0
1985	0.0	0.0	0.0	0.0	0.0	0.0	0.0	0.0	0.0
1986	0.0	0.0	0.0	0.0	0.0	0.0	0.0	0.0	0.0
1987	0.0	0.0	0.0	0.0	0.0	0.0	0.0	0.0	0.0
1988	0.0	0.0	0.0	85090.2	0.0	84664.8	7.2	0.0	83818.1
1989	0.0	0.0	0.0	36834.1	0.0	36650.0	3.2	0.0	36283.5
1990	0.0	0.0	0.0	47462.3	0.0	47225.0	4.0	0.0	46752.7
1991	0.0	0.0	0.0	61347.1	0.0	61040.4	5.2	0.0	60430.0
1992	0.0	0.0	0.0	77765.5	0.0	77376.6	6.6	0.0	76602.9
1993	0.0	0.0	0.0	100517.7	0.0	100015.1	8.6	0.0	99014.9
1994	0.0	0.0	0.0	119134.4	0.0	118538.8	10.2	0.0	117353.3
1995	0.0	0.0	0.0	140595.8	0.0	139892.8	12.0	0.0	138493.9

SUMMARY TABLE-SPENT THORIUM FROM REPROCESSING FIRST CORE AND RECYCLED FUEL ELEMENTS

YEAR	....KILOGRAMS OF SPENT THORIUM TO EACH PROCESS.... CRUSHERS	P.BURNER	S.BURNER	DISSOLVER	SOLV.EXT.	TO STORAGE	WASTE (TOTAL)	ACCUMULATED IN STORAGE
1976	0.0	0.0	0.0	0.0	0.0	0.0	0.0	0.0
1977	0.0	0.0	0.0	0.0	0.0	0.0	0.0	0.0
1978	0.0	0.0	0.0	0.0	0.0	0.0	0.0	0.0
1979	0.0	0.0	0.0	0.0	0.0	0.0	0.0	0.0
1980	0.0	0.0	0.0	0.0	0.0	0.0	0.0	0.0
1981	0.0	0.0	0.0	0.0	0.0	0.0	0.0	0.0
1982	0.0	0.0	0.0	0.0	0.0	0.0	0.0	0.0
1983	0.0	0.0	0.0	0.0	0.0	0.0	0.0	0.0
1984	0.0	0.0	0.0	0.0	0.0	0.0	0.0	0.0
1985	0.0	0.0	0.0	0.0	0.0	0.0	0.0	0.0
1986	0.0	0.0	0.0	0.0	0.0	0.0	0.0	0.0
1987	0.0	0.0	0.0	0.0	0.0	0.0	0.0	0.0
1988	340708.9	340538.4	24051.1	333487.1	333320.3	329987.1	9873.7	329987.1
1989	133914.4	133847.4	1862.5	131151.8	131086.2	129775.3	3400.3	459762.4
1990	173767.9	173681.0	1862.5	170188.7	170103.6	168402.6	4310.9	628164.9
1991	223362.8	223251.0	1862.5	218767.3	218657.9	216471.3	5493.8	844636.3
1992	276860.3	276721.8	1862.5	271168.7	271033.0	268322.6	6621.0	1112958.0
1993	326157.3	325994.1	2189.6	319452.3	319292.5	316099.4	7622.2	1429057.0
1994	375632.9	375445.1	1862.5	367917.4	367733.4	364056.1	8416.7	1793113.0
1995	431439.7	431223.9	1862.5	422580.6	422369.3	418145.5	9225.8	2211258.0

THORIUM REQUIREMENTS(IN FRESH FUEL PLANT)FOR REFABRICATING FUEL ELEMENTS CONTAINING BRED URANIUM
TOTAL KILOGRAMS FRESH TH TO EACH BELOW.

YEAR	MICROSPHERE COATING (TRISO)	(BISO)	MICROSPHERE PREP.	REJT. RECL.	TOTAL WASTE	SLOW SCRAP	FEED PREP.	NET FEED
1976	0.0	0.0	0.0	0.0	0.0	0.0	0.0	0.0
1977	0.0	0.0	0.0	0.0	0.0	0.0	0.0	0.0
1978	0.0	0.0	0.0	0.0	0.0	0.0	0.0	0.0
1979	0.0	0.0	0.0	0.0	0.0	0.0	0.0	0.0
1980	0.0	0.0	0.0	0.0	0.0	0.0	0.0	0.0
1981	0.0	0.0	0.0	0.0	0.0	0.0	0.0	0.0
1982	0.0	0.0	0.0	0.0	0.0	0.0	0.0	0.0
1983	0.0	0.0	0.0	0.0	0.0	0.0	0.0	0.0
1984	0.0	0.0	0.0	0.0	0.0	0.0	0.0	0.0
1985	0.0	0.0	0.0	0.0	0.0	0.0	0.0	0.0
1986	0.0	0.0	0.0	0.0	0.0	0.0	0.0	0.0
1987	0.0	0.0	0.0	0.0	0.0	0.0	0.0	0.0
1988	9378.7	89479.4	115623.4	31701.2	634.0	0.0	116791.3	95340.6
1989	817.0	41808.3	49854.2	13523.6	270.5	10853.8	50357.7	30316.6
1990	796.5	54114.6	64223.5	17410.0	348.2	4606.7	64872.2	48439.5
1991	796.3	70166.6	82997.6	22488.8	449.8	5931.5	83835.9	62629.0
1992	796.3	89147.4	105197.3	28494.4	569.9	7660.2	106259.9	79242.8
1993	935.8	115318.3	135969.6	36825.4	736.5	9704.5	137343.1	102621.6
1994	796.7	136972.4	161133.3	43626.6	872.5	12541.2	162760.9	120578.9
1995	966.6	161622.1	190162.2	51487.3	1029.7	14855.2	192082.9	142246.3

REACTOR TYPE 3 FULTON TYPE REACTORS (1160 MWE STATION) TABLE 1 OF 2

SPENT MAKEUP URANIUM BALANCE IN CHEMICAL REPROCESSING PLANT
REPROCESSING STARTS IN 1988

KG SPENT MU URANIUM ENTERING PROCESS(EXCLUDING RECYCLED SCRAP)

YEAR	CRUSHERS	P.BURNER	S.BURNER	DISSOLVER	SOLVENT EXT.	FEED PREP.
1976	0.0	0.0	0.0	0.0	0.0	0.0
1977	0.0	0.0	0.0	0.0	0.0	0.0
1978	0.0	0.0	0.0	0.0	0.0	0.0
1979	0.0	0.0	0.0	0.0	0.0	0.0
1980	0.0	0.0	0.0	0.0	0.0	0.0
1981	0.0	0.0	0.0	0.0	0.0	0.0
1982	0.0	0.0	0.0	0.0	0.0	0.0
1983	0.0	0.0	0.0	0.0	0.0	0.0
1984	0.0	0.0	0.0	0.0	0.0	0.0
1985	0.0	0.0	0.0	0.0	0.0	0.0
1986	0.0	0.0	0.0	0.0	0.0	0.0
1987	0.0	0.0	0.0	0.0	0.0	0.0
1988	5080.2	5077.7	4976.1	4926.4	4923.9	4874.7
1989	2247.0	2245.9	2200.9	2178.9	2177.8	2156.1
1990	2662.8	2661.4	2608.2	2582.1	2580.8	2555.0
1991	3245.3	3243.7	3178.8	3147.0	3145.4	3114.0
1992	4846.8	4844.4	4747.5	4700.1	4697.7	4650.7
1993	4829.8	4827.4	4730.8	4683.5	4681.2	4634.4
1994	5481.3	5478.5	5368.9	5315.3	5312.6	5259.5
1995	5911.9	5909.0	5790.8	5732.9	5730.0	5672.7

URANIUM LOST TO WASTE (KG/YR.) FROM RESPT.PROCESS ABOVE

1976	0.0	0.0	0.0	0.0	0.0	0.0
1977	0.0	0.0	0.0	0.0	0.0	0.0
1978	0.0	0.0	0.0	0.0	0.0	0.0
1979	0.0	0.0	0.0	0.0	0.0	0.0
1980	0.0	0.0	0.0	0.0	0.0	0.0
1981	0.0	0.0	0.0	0.0	0.0	0.0
1982	0.0	0.0	0.0	0.0	0.0	0.0
1983	0.0	0.0	0.0	0.0	0.0	0.0
1984	0.0	0.0	0.0	0.0	0.0	0.0
1985	0.0	0.0	0.0	0.0	0.0	0.0
1986	0.0	0.0	0.0	0.0	0.0	0.0
1987	0.0	0.0	0.0	0.0	0.0	0.0
1988	2.5	0.0	49.8	2.5	49.2	2.4
1989	1.1	0.0	22.0	1.1	21.8	1.1
1990	1.3	0.0	26.1	1.3	25.8	1.3
1991	1.6	0.0	31.8	1.6	31.5	1.6
1992	2.4	0.0	47.5	2.4	47.0	2.3
1993	2.4	0.0	47.3	2.3	46.8	2.3
1994	2.7	0.0	53.7	2.7	53.1	2.6
1995	3.0	0.0	57.9	2.9	57.3	2.8

WASTE FRAC.=	0.0005	0.0200	0.0100	0.0005	0.0100	0.0005

REACTOR TYPE 3 FULTON TYPE REACTORS (1160 MWE STATION) TABLE 2 OF 2

SPENT MAKEUP URANIUM BALANCE IN REFABRICATION PLANT

KG PER YR.ENTERING PROCESS(EXCLUDING RECYCLED SCRAP)

YEAR	MICROSPHERE PREPARATION (TH-U MIX.)	MICROSPHERE PREPARATION (U ONLY)	MICROSPHERE COATING (TRISO)	MICROSPHERE COATING (BISO)	FUEL ROD FAB.	BLOCK ASSEMBLY	PRODUCT TO REACTORS
1976	0.0	0.0	0.0	0.0	0.0	0.0	0.0
1977	0.0	0.0	0.0	0.0	0.0	0.0	0.0
1978	0.0	0.0	0.0	0.0	0.0	0.0	0.0
1979	0.0	0.0	0.0	0.0	0.0	0.0	0.0
1980	0.0	0.0	0.0	0.0	0.0	0.0	0.0
1981	0.0	0.0	0.0	0.0	0.0	0.0	0.0
1982	0.0	0.0	0.0	0.0	0.0	0.0	0.0
1983	0.0	0.0	0.0	0.0	0.0	0.0	0.0
1984	0.0	0.0	0.0	0.0	0.0	0.0	0.0
1985	0.0	0.0	0.0	0.0	0.0	0.0	0.0
1986	0.0	0.0	0.0	0.0	0.0	0.0	0.0
1987	0.0	0.0	0.0	0.0	0.0	0.0	0.0
1988	0.0	4872.2	4165.8	0.0	3415.9	3398.8	3364.9
1989	0.0	2155.0	1842.5	0.0	1510.9	1503.3	1488.3
1990	0.0	2553.7	2183.4	0.0	1790.4	1781.5	1763.7
1991	0.0	3112.4	2661.1	0.0	2182.1	2171.2	2149.5
1992	0.0	4648.4	3974.4	0.0	3259.0	3242.7	3210.3
1993	0.0	4632.1	3960.4	0.0	3247.5	3231.3	3199.0
1994	0.0	5256.8	4494.6	0.0	3685.6	3667.1	3630.5
1995	0.0	5669.9	4847.7	0.0	3975.1	3955.3	3915.7

URANIUM RECLAIMED FROM RECYCLING SCRAP

YEAR	MICROSPHERE PREPARATION (TH-U MIX.)	MICROSPHERE PREPARATION (U ONLY)	MICROSPHERE COATING (TRISO)	MICROSPHERE COATING (BISO)	FUEL ROD FAB.	BLOCK ASSEMBLY	PRODUCT TO REACTORS	SLOW SCRAP	CUMULATIVE STORED
1976								0.0	0.0
1977								0.0	0.0
1978								0.0	0.0
1979								0.0	0.0
1980								0.0	0.0
1981								0.0	0.0
1982								0.0	0.0
1983								0.0	0.0
1984								0.0	0.0
1985								0.0	0.0
1986								0.0	0.0
1987								0.0	0.0
1988								0.0	1509.5
1989								0.0	2179.7
1990								0.0	2974.3
1991								0.0	3942.8
1992								0.0	5384.6
1993								0.0	6834.0
1994								0.0	8482.8
1995								0.0	10265.9

SUMMARY TABLE - ALL REACTORS (INCLUDING SCRAP RECOVERY)

SPENT MAKEUP U BALANCE IN REPROCESSING PLANT - KILOGRAMS TO EACH PROCESS BELOW.

YEAR	CRUSHERS	P.BURNER	S.BURNER	DISSOLVER	SOLV.EXT.	FEED PREP.	WASTE
1976	0.0	0.0	0.0	0.0	0.0	0.0	0.0
1977	0.0	0.0	0.0	0.0	0.0	0.0	0.0
1978	0.0	0.0	0.0	0.0	0.0	0.0	0.0
1979	0.0	0.0	0.0	0.0	0.0	0.0	0.0
1980	0.0	0.0	0.0	0.0	0.0	0.0	0.0
1981	0.0	0.0	0.0	0.0	0.0	0.0	0.0
1982	0.0	0.0	0.0	0.0	0.0	0.0	0.0
1983	0.0	0.0	0.0	0.0	0.0	0.0	0.0
1984	0.0	0.0	0.0	0.0	0.0	0.0	0.0
1985	0.0	0.0	0.0	0.0	0.0	0.0	0.0
1986	0.0	0.0	0.0	0.0	0.0	0.0	0.0
1987	0.0	0.0	0.0	0.0	0.0	0.0	0.0
1988	8022.7	8018.7	7858.3	7779.7	7775.9	7698.1	168.1
1989	3185.3	3183.7	3120.0	3086.8	3087.3	3056.4	66.7
1990	4201.9	4199.8	4115.8	4074.6	4072.6	4031.9	88.0
1991	5405.0	5402.3	5294.3	5241.3	5238.7	5186.3	113.2
1992	6703.3	6700.0	6566.0	6500.3	6497.1	6432.1	140.4
1993	6699.0	6695.7	6561.7	6496.1	6492.9	6427.9	140.4
1994	7629.0	7625.2	7472.7	7398.0	7394.3	7320.3	159.8
1995	8620.3	8616.0	8443.7	8359.3	8355.1	8271.5	180.6

SPENT MAKEUP U BALANCE IN REFAB. PLANT - KG.TO EACH PROCESS BELOW

YEAR	MICROSPHERE PREPARATION (TH-U MIX.)	(U ONLY)	MICROSPHERE COATING (TRISO)	(BISO)	FUEL ROD FAB.	BLOCK ASSEMBLY	PRODUCT TO REACTORS	SLOW SCRAP	CUMULATIVE STORED
1976	0.0	0.0	0.0	0.0	0.0	0.0	0.0	0.0	0.0
1977	0.0	0.0	0.0	0.0	0.0	0.0	0.0	0.0	0.0
1978	0.0	0.0	0.0	0.0	0.0	0.0	0.0	0.0	0.0
1979	0.0	0.0	0.0	0.0	0.0	0.0	0.0	0.0	0.0
1980	0.0	0.0	0.0	0.0	0.0	0.0	0.0	0.0	0.0
1981	0.0	0.0	0.0	0.0	0.0	0.0	0.0	0.0	0.0
1982	0.0	0.0	0.0	0.0	0.0	0.0	0.0	0.0	0.0
1983	0.0	0.0	0.0	0.0	0.0	0.0	0.0	0.0	0.0
1984	0.0	0.0	0.0	0.0	0.0	0.0	0.0	0.0	0.0
1985	0.0	0.0	0.0	0.0	0.0	0.0	0.0	0.0	0.0
1986	0.0	0.0	0.0	0.0	0.0	0.0	0.0	0.0	0.0
1987	0.0	0.0	0.0	0.0	0.0	0.0	0.0	0.0	0.0
1988	0.0	7694.2	6578.6	0.0	5394.4	5367.5	5313.8	0.0	2386.2
1989	0.0	3054.9	2611.9	0.0	2141.8	2131.1	2109.8	0.0	3335.6
1990	0.0	4029.9	3445.5	0.0	2825.3	2811.2	2783.1	0.0	4587.3
1991	0.0	5183.7	4432.1	0.0	3634.3	3616.1	3580.0	0.0	6197.7
1992	0.0	6428.9	5496.7	0.0	4507.3	4484.7	4439.9	0.0	8196.0
1993	0.0	6424.7	5493.1	0.0	4504.4	4481.9	4437.0	0.0	10208.9
1994	0.0	7316.6	6255.7	0.0	5129.7	5104.1	5053.0	0.0	12504.5
1995	0.0	8267.4	7068.6	0.0	5796.3	5767.3	5709.6	0.0	15102.6

FABRICATION PLANT AND REFABRICATION PLANT OUTPUT (KG HEAVY METAL)

** INITIAL CORE FABRICATION **

YEAR	THORIUM	URANIUM	TOTAL
1976	0.0	0.0	0.0
1977	0.0	0.0	0.0
1978	13040.0	618.5	13658.5
1979	13040.0	618.5	13658.5
1980	31788.5	1567.9	33356.5
1981	69285.6	3466.8	72752.4
1982	74994.0	3797.8	78791.8
1983	81887.3	4146.9	86034.1
1984	100635.7	5096.3	105732.0
1985	119384.3	6045.8	125430.0
1986	151919.1	7693.4	159612.4
1987	196309.4	9941.4	206250.7
1988	220020.0	11142.1	231162.1
1989	231875.4	11742.5	243617.8
1990	238768.6	12091.5	250860.1
1991	245661.7	12440.6	258102.3
1992	257517.1	13041.0	270558.0
1993	281227.8	14241.7	295469.5
1994	318724.8	16140.6	334865.4
1995	337473.3	17090.1	354563.4

** FUEL FABRICATION REQUIREMENTS FOR ANNUAL REFUELING **

	FRESH MAKEUP FUEL			*RECYCLED BRED FUEL*			*RECYCLED MAKEUP FUEL*		
YEAR	THORIUM	URANIUM	TOTAL	THORIUM	URANIUM	TOTAL	THORIUM	URANIUM	TOTAL
1976	2306.7	205.2	2511.9	0.0	0.0	0.0	0.0	0.0	0.0
1977	2306.7	205.2	2511.9	0.0	0.0	0.0	0.0	0.0	0.0
1978	2306.7	205.2	2511.9	0.0	0.0	0.0	0.0	0.0	0.0
1979	2306.7	205.2	2511.9	0.0	0.0	0.0	0.0	0.0	0.0
1980	2711.8	241.2	2953.0	0.0	0.0	0.0	0.0	0.0	0.0
1981	8334.4	786.1	9120.5	0.0	0.0	0.0	0.0	0.0	0.0
1982	8334.4	786.1	9120.5	0.0	0.0	0.0	0.0	0.0	0.0
1983	23478.2	2210.2	25688.4	0.0	0.0	0.0	0.0	0.0	0.0
1984	40160.9	3750.9	43911.8	0.0	0.0	0.0	0.0	0.0	0.0
1985	57186.2	5328.2	62514.3	0.0	0.0	0.0	0.0	0.0	0.0
1986	76087.5	7072.7	83160.1	0.0	0.0	0.0	0.0	0.0	0.0
1987	103661.4	9627.1	113288.6	0.0	0.0	0.0	0.0	0.0	0.0
1988	56969.0	5269.6	62238.6	83818.1	8381.8	92199.9	11424.6	5313.8	16738.4
1989	121760.3	11262.8	133023.0	36283.5	3628.3	39911.8	4536.0	2109.8	6645.7
1990	166397.1	15415.7	181812.8	46752.7	4675.3	51428.0	5983.6	2783.1	8766.7
1991	206903.6	19170.7	226074.3	60430.0	6043.0	66472.9	7696.9	3580.0	11276.9
1992	239931.3	22220.7	262152.0	76602.9	7660.3	84263.1	9545.8	4439.9	13985.7
1993	268966.4	24903.3	293869.7	99014.9	9901.5	108916.3	9539.6	4437.0	13976.7
1994	307972.0	28507.4	336479.4	117353.3	11735.3	129088.6	10864.0	5053.0	15917.0
1995	348796.3	32287.6	381083.9	138493.9	13849.4	152343.3	12275.7	5709.6	17985.3

INITIAL CORE FABRICATION,FRESH FEED

** THORIUM BALANCE (KG ENTERING PROCESS) **

YEAR	BLOCK ASSEMBLY	FUEL ROD FABRICATION	MICROSPHERE COATING	MICROSPHERE PREP.	REJECT RECL.	LOSS TO WASTE	FEED
1976	0.0	0.0	0.0	0.0	0.0	0.0	0.0
1977	0.0	0.0	0.0	0.0	0.0	0.0	0.0
1978	13171.7	13237.9	15303.9	17899.3	3176.9	63.5	14966.8
1979	13171.7	13237.9	15303.9	17899.3	5040.1	100.8	13140.8
1980	32109.6	32271.0	37307.5	43634.5	9607.8	192.2	34659.6
1981	69985.4	70337.1	81314.6	95104.7	21422.0	428.4	75071.8
1982	75751.5	76132.1	88014.0	102940.3	28170.4	563.4	76373.0
1983	82714.4	83130.0	96104.1	112402.4	30665.5	613.3	83485.5
1984	101652.2	102162.9	118107.4	138137.3	36218.1	724.4	104038.9
1985	120590.1	121196.0	140110.9	163872.4	43464.6	869.3	122932.3
1986	153453.5	154224.6	178294.3	208531.2	54069.7	1081.4	157649.2
1987	198292.1	199288.5	230391.3	269463.4	69533.2	1390.7	204042.8
1988	222242.4	223359.1	258218.6	302010.1	81652.5	1633.0	225041.3
1989	234217.5	235394.4	272132.3	318283.3	87928.9	1758.6	235328.0
1990	241180.3	242392.2	280222.2	327745.2	91302.2	1826.0	241579.6
1991	248143.0	249389.9	288311.9	337206.9	93966.4	1879.3	248525.9
1992	260118.2	261425.3	302225.8	353480.4	97839.7	1956.8	261168.1
1993	284068.4	285495.8	330052.9	386026.8	105310.3	2106.2	286721.9
1994	321944.3	323562.0	374060.1	437497.1	117833.5	2356.7	326439.4
1995	340882.1	342595.1	396063.6	463232.3	127759.0	2555.2	342707.6

** URANIUM BALANCE (KG ENTERING PROCESS) **

YEAR	BLOCK ASSEMBLY	FUEL ROD FABRICATION	MICROSPHERE COATING	MICROSPHERE PREP.	REJECT RECL.	LOSS TO WASTE	FEED
1976	0.0	0.0	0.0	0.0	0.0	0.0	0.0
1977	0.0	0.0	0.0	0.0	0.0	0.0	0.0
1978	624.7	627.9	765.7	895.6	176.1	3.5	732.0
1979	624.7	627.9	765.7	895.6	286.1	5.7	624.2
1980	1583.8	1591.7	1941.2	2270.4	556.5	11.1	1747.9
1981	3501.9	3519.5	4292.0	5019.9	1266.1	25.3	3829.8
1982	3836.2	3855.4	4701.7	5499.1	1698.0	34.0	3890.6
1983	4188.8	4209.8	5133.9	6004.6	1856.3	37.1	4246.1
1984	5147.8	5173.7	6309.3	7379.4	2188.7	43.8	5308.9
1985	6106.8	6137.5	7484.8	8754.1	2628.0	52.6	6267.2
1986	7771.1	7810.1	9524.6	11139.8	3266.0	65.3	8051.7
1987	10041.8	10092.2	12307.6	14394.8	4199.2	84.0	10425.1
1988	11254.6	11311.2	13794.1	16133.5	4940.8	98.8	11454.4
1989	11861.1	11920.7	14537.4	17002.8	5325.3	106.5	11955.7
1990	12213.7	12275.1	14969.6	17508.3	5531.5	110.6	12264.3
1991	12566.3	12629.4	15401.7	18013.7	5693.0	113.9	12616.6
1992	13172.7	13238.9	16145.0	18883.1	5926.0	118.5	13266.3
1993	14385.6	14457.9	17631.6	20621.7	6374.7	127.5	14582.8
1994	16303.7	16385.6	19982.4	23371.3	7129.0	142.6	16620.9
1995	17262.7	17349.5	21157.9	24746.0	7737.1	154.7	17413.7

INITIAL CORE FABRICATION,FRESH FEED

KILOGRAMS OF THORIUM AND URANIUM DISCHARGED FROM MICROSPHERE COATER

	..... THORIUM CONTENT IN				URANIUM CONTENT IN	
	FERTILE PARTICLES		FISSILE PARTICLES		FISSILE PARTICLES	
YEAR	BISO	TRISO	BISO	TRISO	BISO	TRISO
1976	0.0	0.0	0.0	0.0	0.0	0.0
1977	0.0	0.0	0.0	0.0	0.0	0.0
1978	13237.9	0.0	0.0	0.0	0.0	627.9
1979	13237.9	0.0	0.0	0.0	0.0	627.9
1980	32271.0	0.0	0.0	0.0	0.0	1591.7
1981	70337.1	0.0	0.0	0.0	0.0	3519.5
1982	76132.1	0.0	0.0	0.0	0.0	3855.4
1983	83130.0	0.0	0.0	0.0	0.0	4209.8
1984	102162.9	0.0	0.0	0.0	0.0	5173.7
1985	121196.0	0.0	0.0	0.0	0.0	6137.5
1986	154224.6	0.0	0.0	0.0	0.0	7810.1
1987	199288.5	0.0	0.0	0.0	0.0	10092.2
1988	223359.1	0.0	0.0	0.0	0.0	11311.2
1989	235394.4	0.0	0.0	0.0	0.0	11920.7
1990	242392.2	0.0	0.0	0.0	0.0	12275.1
1991	249389.9	0.0	0.0	0.0	0.0	12629.4
1992	261425.3	0.0	0.0	0.0	0.0	13238.9
1993	285495.8	0.0	0.0	0.0	0.0	14457.9
1994	323562.0	0.0	0.0	0.0	0.0	16385.6
1995	342595.1	0.0	0.0	0.0	0.0	17349.5

THORIUM AND URANIUM DISCHARGED FROM MICROSPHERE PREPARATION

	FERTILE	..... FISSILE PARTICLES		
	PARTICLES	THORIUM-URANIUM(MIXED)		URANIUM(ONLY)
YEAR	(KG TH)	(KG TH)	(KG U)	(KG U)
1976	0.0	0.0	0.0	0.0
1977	0.0	0.0	0.0	0.0
1978	15303.9	0.0	0.0	765.7
1979	15303.9	0.0	0.0	765.7
1980	37307.5	0.0	0.0	1941.2
1981	81314.6	0.0	0.0	4292.0
1982	88014.0	0.0	0.0	4701.7
1983	96104.1	0.0	0.0	5133.9
1984	118107.4	0.0	0.0	6309.3
1985	140110.9	0.0	0.0	7484.8
1986	178294.3	0.0	0.0	9524.6
1987	230391.3	0.0	0.0	12307.6
1988	258218.6	0.0	0.0	13794.1
1989	272132.3	0.0	0.0	14537.4
1990	280222.2	0.0	0.0	14969.6
1991	288311.9	0.0	0.0	15401.7
1992	302225.8	0.0	0.0	16145.0
1993	330052.9	0.0	0.0	17631.6
1994	374060.1	0.0	0.0	19982.4
1995	396063.6	0.0	0.0	21157.9

FABRICATION REQ. FOR ANNUAL REFUELING,FRESH FEED

** THORIUM BALANCE (KG ENTERING PROCESS) **

YEAR	BLOCK ASSEMBLY	FUEL ROD FABRICATION	MICROSPHERE COATING	MICROSPHERE PREP.	REJECT RECL.	LOSS TO WASTE	FEED
1976	2330.0	2341.7	2855.7	3340.0	656.9	13.1	2730.0
1977	2330.0	2341.7	2855.7	3340.0	1067.1	21.3	2328.0
1978	2330.0	2341.7	2855.7	3340.0	1067.1	21.3	2328.0
1979	2330.0	2341.7	2855.7	3340.0	1067.1	21.3	2328.0
1980	2739.2	2752.9	3357.2	3926.6	1182.4	23.6	2807.5
1981	8418.6	8460.9	9929.9	11613.9	2607.6	52.2	9175.7
1982	8418.6	8460.9	9929.9	11613.9	3396.8	67.9	8402.3
1983	23715.3	23834.5	27702.9	32401.0	7086.3	141.7	25783.8
1984	40566.6	40770.4	47282.0	55300.5	13314.5	266.3	42810.9
1985	57763.8	58054.1	67263.1	78670.3	19846.1	396.9	60015.7
1986	76856.0	77242.3	89472.0	104645.6	26900.2	538.0	79340.3
1987	104708.4	105234.7	121807.1	142464.4	36316.2	726.3	108313.5
1988	57544.4	57833.6	66859.6	78198.4	28771.5	575.4	50792.2
1989	122990.1	123608.1	142899.6	167134.0	37804.2	756.1	131774.0
1990	168077.8	168922.4	195286.0	228404.6	57936.7	1158.7	173933.8
1991	208993.5	210043.8	242825.1	284005.9	74183.1	1483.7	214175.2
1992	242354.8	243572.6	281619.8	329379.8	88038.6	1760.8	246429.1
1993	271683.2	273048.4	315756.6	369306.0	99888.1	1997.8	275145.9
1994	311082.8	312646.0	361542.3	422856.4	113577.9	2271.6	315821.4
1995	352319.4	354089.8	409444.3	478882.2	129095.3	2581.9	357206.1

** URANIUM BALANCE (KG ENTERING PROCESS) **

YEAR	BLOCK ASSEMBLY	FUEL ROD FABRICATION	MICROSPHERE COATING	MICROSPHERE PREP.	REJECT RECL.	LOSS TO WASTE	FEED
1976	207.3	208.3	254.0	297.1	58.4	1.2	242.8
1977	207.3	208.3	254.0	297.1	94.9	1.9	207.1
1978	207.3	208.3	254.0	297.1	94.9	1.9	207.1
1979	207.3	208.3	254.0	297.1	94.9	1.9	207.1
1980	243.7	244.9	298.6	349.3	105.2	2.1	249.7
1981	794.0	798.0	973.2	1138.2	266.8	5.3	888.3
1982	794.0	798.0	973.2	1138.2	363.6	7.3	793.4
1983	2232.5	2243.8	2736.3	3200.3	769.2	15.4	2478.8
1984	3788.8	3807.8	4643.7	5431.2	1461.2	29.2	4054.1
1985	5382.0	5409.0	6596.4	7715.1	2184.4	43.7	5652.3
1986	7144.1	7180.0	8756.1	10241.0	2961.6	59.2	7442.1
1987	9724.4	9773.2	11918.6	13939.8	3999.3	80.0	10161.3
1988	5322.8	5349.6	6523.9	7630.3	3212.6	64.3	4559.0
1989	11376.5	11433.7	13943.5	16308.2	4144.5	82.9	12411.4
1990	15571.5	15649.7	19085.0	22321.6	6392.9	127.9	16282.1
1991	19364.3	19461.6	23733.7	27758.7	8200.7	164.0	20002.4
1992	22445.2	22557.9	27509.7	32175.1	9737.0	194.7	22957.8
1993	25154.8	25281.2	30830.8	36059.4	11043.3	220.9	25601.2
1994	28795.4	28940.1	35292.8	41278.1	12546.7	250.9	29399.2
1995	32613.7	32777.6	39972.7	46751.7	14264.1	285.3	33245.1

FABRICATION REQ. FOR ANNUAL REFUELING,FRESH FEED

KILOGRAMS OF THORIUM AND URANIUM DISCHARGED FROM MICROSPHERE COATER

	..... THORIUM CONTENT IN				URANIUM CONTENT IN	
	FERTILE PARTICLES		FISSILE PARTICLES		FISSILE PARTICLES	
YEAR	BISO	TRISO	BISO	TRISO	BISO	TRISO
1976	0.0	1456.4	0.0	885.3	0.0	208.3
1977	0.0	1456.4	0.0	885.3	0.0	208.3
1978	0.0	1456.4	0.0	885.3	0.0	208.3
1979	0.0	1456.4	0.0	885.3	0.0	208.3
1980	0.0	1712.2	0.0	1040.8	0.0	244.9
1981	6119.1	1456.4	0.0	885.3	0.0	798.0
1982	6119.1	1456.4	0.0	885.3	0.0	798.0
1983	21492.8	1456.4	0.0	885.3	0.0	2243.8
1984	38428.7	1456.4	0.0	885.3	0.0	3807.8
1985	55712.3	1456.4	0.0	885.3	0.0	5409.0
1986	74489.3	1712.2	0.0	1040.8	0.0	7180.0
1987	102892.9	1456.4	0.0	885.3	0.0	9773.2
1988	57833.6	0.0	0.0	0.0	0.0	5349.6
1989	123608.1	0.0	0.0	0.0	0.0	11433.7
1990	168922.4	0.0	0.0	0.0	0.0	15649.7
1991	210043.8	0.0	0.0	0.0	0.0	19461.6
1992	243053.8	322.7	0.0	196.2	0.0	22557.9
1993	271569.3	919.9	0.0	559.2	0.0	25281.2
1994	311038.6	999.7	0.0	607.7	0.0	28940.1
1995	352639.1	902.3	0.0	548.5	0.0	32777.6

THORIUM AND URANIUM DISCHARGED FROM MICROSPHERE PREPARATION

	FERTILE	..... FISSILE PARTICLES		
	PARTICLES	THORIUM-URANIUM(MIXED)		URANIUM(ONLY)
YEAR	(KG TH)	(KG TH)	(KG U)	(KG U)
1976	1776.1	1079.6	254.0	0.0
1977	1776.1	1079.6	254.0	0.0
1978	1776.1	1079.6	254.0	0.0
1979	1776.1	1079.6	254.0	0.0
1980	2088.0	1269.2	298.6	0.0
1981	8850.3	1079.6	254.0	719.2
1982	8850.3	1079.6	254.0	719.2
1983	26623.3	1079.6	254.0	2482.3
1984	46202.3	1079.6	254.0	4389.7
1985	66183.4	1079.6	254.0	6342.4
1986	88202.8	1269.2	298.6	8457.5
1987	120727.5	1079.6	254.0	11664.5
1988	66859.6	0.0	0.0	6523.9
1989	142899.6	0.0	0.0	13943.5
1990	195286.0	0.0	0.0	19085.0
1991	242825.1	0.0	0.0	23733.7
1992	281380.5	239.2	56.3	27453.4
1993	315074.8	681.9	160.4	30670.3
1994	360801.3	741.1	174.4	35118.4
1995	408775.4	668.8	157.4	39815.3

INITIAL CORE FABRICATION,FRESH FUEL

TOTAL COSTS ARE IN UNITS OF $/KG H.M.THROUGHPUT

YEAR	SLOW SCRAP(KG) URANIUM	SLOW SCRAP(KG) THORIUM	U-VALUE ($/KG-U)	TH-VALUE ($/KG-TH)	INVENTORY CHARGES,$ URANIUM	INVENTORY CHARGES,$ THORIUM	TOTAL ($/KG)	WASTE VALUE ($) URANIUM	WASTE VALUE ($) THORIUM	TOTAL ($/KG)
1976	0.	0.	23702.7	30.11	0.0	0.0	0.0	0.0	0.0	0.0
1977	0.	0.	24539.7	31.62	0.0	0.0	0.0	0.0	0.0	0.0
1978	110.	1863.	25406.8	33.20	245118.7	51374.2	21.71	89502.1	2109.2	6.71
1979	110.	1863.	26305.1	34.86	258703.8	54163.7	22.91	150527.7	3513.5	11.28
1980	279.	4542.	27235.8	36.60	671224.3	138307.0	24.27	303138.4	7032.6	9.30
1981	616.	9900.	28200.2	38.43	1533381.0	316585.8	25.50	714088.6	16464.1	10.04
1982	675.	10715.	29199.3	40.35	1760384.0	360485.5	26.92	991616.8	22733.2	12.87
1983	737.	11700.	30234.6	42.37	1990458.0	413287.6	27.94	1122473.0	25984.1	13.35
1984	906.	14379.	31307.2	44.49	2528039.0	533084.4	28.95	1370465.0	32223.4	13.27
1985	1075.	17058.	32418.7	46.71	3107212.0	664097.1	30.07	1703894.0	40604.1	13.91
1986	1368.	21707.	33570.4	49.04	4090026.0	887124.4	31.18	2192813.0	53036.8	14.07
1987	1768.	28049.	34763.9	51.50	5471735.0	1203596.0	32.37	2919573.0	71615.0	14.50
1988	1981.	31438.	36000.5	54.07	6365156.0	1417102.0	33.67	3557452.0	88302.0	15.77
1989	2088.	33132.	37282.1	56.78	6954430.0	1568494.0	34.98	3970790.0	99843.9	16.71
1990	2150.	34116.	38610.1	59.61	7419407.0	1696029.0	36.34	4271439.0	108857.9	17.46
1991	2212.	35101.	39986.4	62.59	7905805.0	1832247.0	37.73	4552837.0	117636.1	18.10
1992	2319.	36795.	41412.7	65.72	8580017.0	2016554.0	39.17	4908254.0	128609.1	18.62
1993	2532.	40183.	42890.8	69.01	9697391.0	2311974.0	40.65	5468358.0	145350.6	19.00
1994	2870.	45541.	44422.7	72.46	11375664.0	2750874.0	42.19	6333819.0	170766.8	19.42
1995	3039.	48220.	46010.4	76.08	12490088.0	3059094.0	43.85	7119716.0	194408.3	20.63

DATA FOR ANNUAL REFUELING,FRESH FUEL

TOTAL COSTS ARE IN UNITS OF $/KG H.M.THROUGHPUT

YEAR	SLOW SCRAP(KG) URANIUM	SLOW SCRAP(KG) THORIUM	U-VALUE ($/KG-U)	TH-VALUE ($/KG-TH)	INVENTORY CHARGES,$ URANIUM	INVENTORY CHARGES,$ THORIUM	TOTAL ($/KG)	WASTE VALUE ($) URANIUM	WASTE VALUE ($) THORIUM	TOTAL ($/KG)
1976	36.	410.	23702.7	30.11	75865.7	8701.8	33.67	27701.4	395.6	11.19
1977	36.	410.	24539.7	31.62	80066.8	9181.0	35.53	46587.0	674.7	18.82
1978	36.	410.	25406.8	33.20	82895.9	9640.0	36.84	48233.2	708.5	19.48
1979	36.	410.	26305.1	34.86	85826.9	10122.0	38.20	49938.6	743.9	20.18
1980	43.	482.	27235.8	36.60	104172.8	12483.6	39.50	57295.5	865.5	19.70
1981	140.	1271.	28200.2	38.43	347844.4	38659.4	42.38	150452.8	2004.1	16.72
1982	140.	1271.	29199.3	40.35	364978.0	40700.6	44.48	212363.5	2741.2	23.58
1983	393.	3435.	30234.6	42.37	1049566.0	118881.6	45.49	465137.1	6004.5	18.34
1984	667.	5819.	31307.2	44.49	1852684.0	213230.8	47.05	914932.4	11846.0	21.11
1985	947.	8252.	32418.7	46.71	2731170.0	318650.9	48.79	1416283.0	18540.0	22.95
1986	1258.	10966.	33570.4	49.04	3757696.0	445139.6	50.54	1988460.0	26386.3	24.23
1987	1712.	14892.	34763.9	51.50	5294832.0	636258.8	52.35	2780617.0	37403.5	24.87
1988	937.	8140.	36000.5	54.07	3063969.0	368327.6	55.15	2313083.0	31114.5	37.66
1989	2003.	17398.	37282.1	56.78	6609274.0	822017.4	55.86	3090297.0	42927.0	23.55
1990	2741.	23776.	38610.1	59.61	9415858.0	1180804.0	58.28	4936596.0	69076.8	27.53
1991	3409.	29563.	39986.4	62.59	12143771.0	1542118.0	60.54	6558335.0	92869.4	29.42
1992	3951.	34300.	41412.7	65.72	14594175.0	1878364.0	62.84	8064695.0	115725.6	31.20
1993	4428.	38482.	42890.8	69.01	16949392.0	2211628.0	65.20	9473118.0	137866.8	32.70
1994	5069.	44060.	44422.7	72.46	20088208.0	2658740.0	67.60	11147180.0	164599.4	33.62
1995	5741.	49888.	46010.4	76.08	23569344.0	3161674.0	70.14	13125944.0	196441.6	34.96

THE ABOVE COSTS WERE COMPUTED FROM THE FOLLOWING DATA,REFERENCED TO YEAR 1976
ORE COST= 22.00$/LB(U3O8). CONV.COST(U3O8 TO UF6)= 3.90$/KG U
URANIUM ASSAY.PRODUCT= 0.9315 NAT.FEED= 0.00711 TAILS= 0.0020
KG U FEED/KG U PRODUCT= 181.8982 KG SWU/KG PRODUCT= 235.9651
ENRICHING COST= 53.35$/KG SWU.ESCALATED AT 0.04PER ANNUM THEREAFTER
NAT.U FEED ESCALATED AT 0.03PER ANNUM
TH COST= 26.46$/KG THO2. ESC.RATE= 0.050PER ANNUM
INVENTORY CHARGES(PER YEAR) ON U= 0.085 ON THORIUM= 0.085

HARDWARE COSTS FOR REACTOR TYPE 3 FULTON TYPE REACTORS (1160 MWE STATION)
UNIT COSTS REFERENCED TO YEAR 1973 ESCALATED AT0.070/YEAR TO 1976,AND0.040/YEAR THEREAFTER
CONTROL FUEL ELEMENTS= 600.0 $EACH. FUEL ELEMENTS= 650.0 $ EACH

	..CONTROL FUEL ELEMENTS..			....FUEL ELEMENTS....			HARDWARE COST($) FOR FABRICATION OF:		
YEAR	NUMBER	UNIT COST	COST($)	NUMBER	UNIT COST	COST($)	FIRST CORE	FRESH MAKEUP	RECYCLED
1976	0.0	735.02	0.0	0.0	796.28	0.0	0.0	0.0	0.0
1977	0.0	764.43	0.0	0.0	828.13	0.0	0.0	0.0	0.0
1978	0.0	795.00	0.0	0.0	861.25	0.0	0.0	0.0	0.0
1979	0.0	826.80	0.0	0.0	895.70	0.0	0.0	0.0	0.0
1980	294.9	859.87	253618.9	1697.0	931.53	1580775.0	1834393.0	0.0	0.0
1981	884.8	894.27	791290.8	5090.9	968.79	4932015.0	5723305.0	0.0	0.0
1982	1179.8	930.04	1097255.0	6787.9	1007.54	6839055.0	7936310.0	0.0	0.0
1983	1038.4	967.24	1004363.8	6012.1	1047.84	6299741.0	6190317.0	1113788.0	0.0
1984	1632.3	1005.93	1641996.0	9454.5	1089.75	10303118.0	8583900.0	3361215.0	0.0
1985	2218.2	1046.16	2320579.0	12800.0	1133.34	14506789.0	11159070.0	5668292.0	0.0
1986	2060.6	1088.01	2241957.0	11830.3	1178.68	13944093.0	9284338.0	6901705.0	0.0
1987	2816.2	1131.53	3186568.0	16290.9	1225.82	19969760.0	12069640.0	11086689.0	0.0
1988	4286.9	1176.79	5044737.0	24727.3	1274.85	31523648.0	22594320.0	9769908.0	8204150.0
1989	5167.7	1223.86	6324510.0	29769.7	1325.85	39470080.0	28719888.0	12678949.0	4395745.0
1990	5309.1	1272.81	6757483.0	30545.4	1378.88	42118544.0	27153344.0	16229970.0	5492715.0
1991	5935.4	1323.72	7856772.0	34375.8	1434.04	49296032.0	25415488.0	24757072.0	6980190.0
1992	7244.4	1376.67	9973225.0	41793.9	1491.40	62331264.0	32305904.0	30377664.0	9620908.0
1993	9151.5	1431.74	13102578.0	52703.0	1551.05	81745056.0	45815632.0	35567584.0	13464393.0
1994	10315.1	1489.01	15359339.0	59297.0	1613.09	95651456.0	54001328.0	39987200.0	17022224.0
1995	11701.0	1548.57	18119792.0	67636.3	1677.61	113467680.0	59464976.0	51601728.0	20520816.0

HARDWARE COSTS FOR REACTOR TYPE 4 LARGE 1500 MWE REACTORS
UNIT COSTS REFERENCED TO YEAR 1973 ESCALATED AT0.070/YEAR TO 1976,AND0.040/YEAR THEREAFTER
CONTROL FUEL ELEMENTS= 600.0 $EACH. FUEL ELEMENTS= 650.0 $ EACH

	..CONTROL FUEL ELEMENTS..			....FUEL ELEMENTS....			HARDWARE COST($) FOR FABRICATION OF:		
YEAR	NUMBER	UNIT COST	COST($)	NUMBER	UNIT COST	COST($)	FIRST CORE	FRESH MAKEUP	RECYCLED
1976	0.0	735.02	0.0	0.0	796.28	0.0	0.0	0.0	0.0
1977	0.0	764.43	0.0	0.0	828.13	0.0	0.0	0.0	0.0
1978	0.0	795.00	0.0	0.0	861.25	0.0	0.0	0.0	0.0
1979	0.0	826.80	0.0	0.0	895.70	0.0	0.0	0.0	0.0
1980	0.0	859.87	0.0	0.0	931.53	0.0	0.0	0.0	0.0
1981	0.0	894.27	0.0	0.0	968.79	0.0	0.0	0.0	0.0
1982	0.0	930.04	0.0	0.0	1007.54	0.0	0.0	0.0	0.0
1983	391.9	967.24	379078.8	2327.3	1047.84	2438611.0	2817689.0	0.0	0.0
1984	391.9	1005.93	394241.6	2327.3	1089.75	2536153.0	2930394.0	0.0	0.0
1985	391.9	1046.16	410011.1	2327.3	1133.34	2637598.0	3047609.0	0.0	0.0
1986	1377.8	1088.01	1499034.0	8177.8	1178.68	9638949.0	9508537.0	1629448.0	0.0
1987	1769.7	1131.53	2002463.0	10505.0	1225.82	12877328.0	13185167.0	1694625.0	0.0
1988	1187.9	1176.79	1397882.0	7046.5	1274.85	8983212.0	6856276.0	2710139.0	814679.2
1989	1175.8	1223.86	1438961.0	6981.8	1325.85	9256823.0	3565262.0	6171491.0	959036.3
1990	1996.0	1272.81	2540484.0	11830.3	1378.88	16312578.0	7415743.0	9562611.0	1874706.0
1991	2363.6	1323.72	3128803.0	14028.3	1434.04	20117040.0	11568549.0	8488223.0	3189075.0
1992	2149.5	1376.67	2959150.0	12767.7	1491.40	19041648.0	8020852.0	10014635.0	3965311.0
1993	1543.4	1431.74	2209795.0	9179.8	1551.05	14238325.0	0.0	11523608.0	4924515.0
1994	2020.2	1489.01	3008096.0	11959.6	1613.09	19291920.0	0.0	16484545.0	5815477.0
1995	1971.7	1548.57	3053337.0	11701.0	1677.61	19629776.0	0.0	14964779.0	7718340.0

SUMMARY TABLE-ANNUAL HARDWARE COSTS

DISTRIBUTION OF ANNUAL HARDWARE COSTS.ALL REACTORS.REJECTED ELEMENTS INCLUDED.

YEAR	INITIAL CORES ($)	($/KG)	FRESH MAKEUP ($)	($/KG)	RECYCLED FUEL ($)	($/KG)	TOTAL ($)	AVG. ($/KG)	MILLS/ KW-HR*
1976	0.	0.0	211942.	84.38	0.	0.0	211942.	84.38	0.0916
1977	0.	0.0	220420.	87.75	0.	0.0	220420.	87.75	0.0952
1978	1178850.	86.31	229236.	91.26	0.	0.0	1408086.	87.08	0.6084
1979	1226003.	89.76	238406.	94.91	0.	0.0	1464408.	90.56	0.6328
1980	3109435.	93.22	291354.	98.66	0.	0.0	3400789.	93.66	1.4695
1981	7049349.	96.90	938345.	102.88	0.	0.0	7987693.	97.56	1.0355
1982	7936310.	100.73	975878.	107.00	0.	0.0	8912188.	101.38	1.1553
1983	9008006.	104.70	2864711.	111.52	0.	0.0	11872717.	106.27	0.5587
1984	11514294.	108.90	5103596.	116.22	0.	0.0	16617890.	111.05	0.4429
1985	14206679.	113.26	7562089.	120.97	0.	0.0	21768752.	115.83	0.4047
1986	18792864.	117.74	10470641.	125.91	0.	0.0	29263504.	120.54	0.4040
1987	25254800.	122.45	14829643.	130.90	0.	0.0	40084416.	125.44	0.4139
1988	29450592.	127.40	8480047.	136.25	11057164.	101.50	48987792.	121.76	0.3962
1989	32285136.	132.52	18850432.	141.71	7570250.	162.60	58705808.	138.72	0.3648
1990	34569072.	137.80	26793024.	147.37	8571625.	142.40	69933728.	141.89	0.3388
1991	36984032.	143.29	34636096.	153.21	11174684.	143.73	82794880.	147.34	0.3244
1992	40326752.	149.05	41782768.	159.38	14649791.	149.11	96759312.	153.35	0.3158
1993	45815632.	155.06	48714496.	165.77	19357360.	157.51	113887520.	159.90	0.3185
1994	54001328.	161.26	58019232.	172.43	23869328.	164.61	135889936.	166.46	0.3305
1995	59464976.	167.71	68316480.	179.27	29292416.	171.98	157073840.	173.38	0.3356

* CAUTION-MILLS/KW-HR IS REFERENCED TO INSTALLED CAPACITY.

DISTRIBUTION OF UNFUELED ELEMENTS FOR ASSEMBLY.ALL REACTORS.INCLUDES ELEMENTS REJECTED IN ASSEMBLY

YEAR	..FIRST CORES.. CONTROL	REGULAR	..FRESH MAKEUP.. CONTROL	REGULAR	..RECYCLED FUEL.. CONTROL	REGULAR	...ALL FABRICATION... CONTROL	REGULAR	TOTAL
1976	0.	0.	36.	206.	0.	0.	36.	206.	242.
1977	0.	0.	36.	206.	0.	0.	36.	206.	242.
1978	222.	1164.	36.	206.	0.	0.	259.	1370.	1628.
1979	222.	1164.	36.	206.	0.	0.	259.	1370.	1628.
1980	517.	2861.	42.	242.	0.	0.	560.	3103.	3663.
1981	1107.	6255.	149.	804.	0.	0.	1257.	7059.	8315.
1982	1180.	6788.	149.	804.	0.	0.	1329.	7592.	8921.
1983	1277.	7418.	416.	2323.	0.	0.	1693.	9741.	11434.
1984	1572.	9115.	707.	4004.	0.	0.	2279.	13119.	15398.
1985	1867.	10812.	1006.	5717.	0.	0.	2873.	16529.	19402.
1986	2356.	13770.	1343.	7612.	0.	0.	3699.	21382.	25081.
1987	3042.	17794.	1806.	10404.	0.	0.	4848.	28198.	33046.
1988	3438.	19927.	985.	5743.	1306.	7441.	5729.	33111.	38840.
1989	3636.	20994.	2107.	12273.	863.	4886.	6606.	38154.	44760.
1990	3733.	21624.	2895.	16759.	931.	5330.	7560.	43713.	51273.
1991	3830.	22255.	3579.	20849.	1152.	6702.	8562.	49806.	58368.
1992	4028.	23321.	4167.	24163.	1459.	8451.	9655.	55935.	65590.
1993	4424.	25455.	4675.	27075.	1858.	10755.	10958.	63285.	74242.
1994	5014.	28848.	5364.	30998.	2212.	12747.	12590.	72594.	85184.
1995	5309.	30545.	6038.	35132.	2588.	15062.	13935.	80739.	94675.

```
          .... FRESH FUEL ASSEMBLY COSTS ....

COST FOR EQUIPMENT INSTALLED IN 1976,SIZED FOR MAXIMUM THROUGHPUT 1976 TO 1980
SUBSYSTEM =      1     2     3     4     5     6     7     8     9    10    11    12    13    14    15
NO. UNITS =     2.    2.    2.    1.    1.    1.    1.    1.    1.    1.    1.    1.    1.    1.    1.
COST FRAC.=   0.01  0.04  0.07  0.00  0.23  0.02  0.08  0.06  0.01  0.01  0.41  0.01  0.01  0.00  0.01
SUBSYSTEM =     16    17
NO. UNITS =     1.    1.
COST FRAC.=   0.01  0.01

MATERIALS COST($)=        627705.0
LABOR COST    ($)=        877837.0
ENGINEERING COST =        920902.0
INSTALLATION COST=        465389.0
   TOTAL COST ($)=       2891833.0
FLOOR AREA (FT2) =           789.5

CONSUMABLES, ($) =         73225.3
OPERATION MAN-HRS=         12699.7
MAINTENANCE MN-HR=          1743.3

COST FOR ADDITIONAL EQUIPMENT IN 1980,SIZED FOR MAXIMUM THROUGHPUT 1980 TO 1985
SUBSYSTEM =      1     2     3     4     5     6     7     8     9    10    11    12    13    14    15
NO. UNITS =    19.   19.   19.    3.    5.    5.    3.    5.    5.    5.    1.    3.    3.    3.    5.
COST FRAC.=   0.02  0.11  0.19  0.00  0.31  0.03  0.06  0.08  0.02  0.01  0.11  0.01  0.01  0.00  0.01
SUBSYSTEM =     16    17
NO. UNITS =     3.    3.
COST FRAC.=   0.01  0.00

MATERIALS COST($)=       2086885.0
LABOR COST    ($)=       3459411.0
ENGINEERING COST =       3391812.0
INSTALLATION COST=       1714057.0
   TOTAL COST ($)=      10652165.0
FLOOR AREA (FT2) =          2454.3

CONSUMABLES, ($) =        309439.6
OPERATION MAN-HRS=         50682.1
MAINTENANCE MN-HR=          7304.6

COST FOR ADDITIONAL EQUIPMENT IN 1985,SIZED FOR MAXIMUM THROUGHPUT 1985 TO 1990
SUBSYSTEM =      1     2     3     4     5     6     7     8     9    10    11    12    13    14    15
NO. UNITS =    32.   32.   32.    4.    9.    9.    4.    9.    9.    9.    2.    4.    4.    4.    9.
COST FRAC.=   0.02  0.11  0.18  0.00  0.32  0.03  0.05  0.08  0.02  0.01  0.13  0.01  0.00  0.00  0.01
SUBSYSTEM =     16    17
NO. UNITS =     6.    4.
COST FRAC.=   0.01  0.00

MATERIALS COST($)=       3650605.0
LABOR COST    ($)=       6025473.0
ENGINEERING COST =       5917431.0
INSTALLATION COST=       2990389.0
   TOTAL COST ($)=      18583888.0
FLOOR AREA (FT2) =          4293.8

CONSUMABLES, ($) =        543608.8
OPERATION MAN-HRS=         83799.3
MAINTENANCE MN-HR=         12426.5

COST FOR ADDITIONAL EQUIPMENT IN 1990,SIZED FOR MAXIMUM THROUGHPUT 1990 TO 1995
SUBSYSTEM =      1     2     3     4     5     6     7     8     9    10    11    12    13    14    15
NO. UNITS =    43.   43.   43.    6.   12.   12.    6.   12.   12.   12.    3.    6.    6.    6.   12.
COST FRAC.=   0.02  0.11  0.18  0.00  0.32  0.03  0.05  0.08  0.02  0.01  0.14  0.01  0.00  0.00  0.01
SUBSYSTEM =     16    17
NO. UNITS =     8.    6.

COST FRAC.=   0.01  0.00

MATERIALS COST($)=       5020820.0
LABOR COST    ($)=       8228722.0
ENGINEERING COST =       8102843.0
INSTALLATION COST=       4094794.0
   TOTAL COST ($)=      25447168.0
FLOOR AREA (FT2) =          5944.8

CONSUMABLES, ($) =        734941.2
OPERATION MAN-HRS=        115626.9
MAINTENANCE MN-HR=         16972.4
```

.... FUEL ROD MFG.,FRESH FUEL ....

COST FOR EQUIPMENT INSTALLED IN 1976,SIZED FOR MAXIMUM THROUGHPUT 1976 TO 1980

SUBSYSTEM =	1	2	3	4	5	6	7	8	9	10	11	12	13	14	15
NO. UNITS =	1.	1.	1.	1.	1.	1.	1.	1.	1.	1.	1.	1.	1.	1.	1.
COST FRAC.=	0.09	0.02	0.08	0.02	0.01	0.05	0.08	0.04	0.05	0.06	0.09	0.03	0.00	0.30	0.09

MATERIALS COST($)= 297495.0
LABOR COST ($)= 236100.0
ENGINEERING COST = 592000.0
INSTALLATION COST= 238000.0
TOTAL COST ($)= 1363595.0
FLOOR AREA (FT2) = 227.0

CONSUMABLES, ($) = 534945.0
OPERATION MAN-HRS= 22645.5
MAINTENANCE MN-HR= 2191.5

COST FOR ADDITIONAL EQUIPMENT IN 1980,SIZED FOR MAXIMUM THROUGHPUT 1980 TO 1985

SUBSYSTEM =	1	2	3	4	5	6	7	8	9	10	11	12	13	14	15
NO. UNITS =	2.	2.	3.	3.	3.	3.	3.	3.	3.	3.	3.	9.	9.	9.	9.
COST FRAC.=	0.03	0.01	0.04	0.01	0.00	0.03	0.05	0.02	0.03	0.03	0.05	0.04	0.00	0.50	0.15

MATERIALS COST($)= 1638255.0
LABOR COST ($)= 1233300.0
ENGINEERING COST = 3184800.0
INSTALLATION COST= 1280100.0
TOTAL COST ($)= 7336455.0
FLOOR AREA (FT2) = 932.0

CONSUMABLES, ($) = 1699507.0
OPERATION MAN-HRS= 143908.5
MAINTENANCE MN-HR= 9679.1

COST FOR ADDITIONAL EQUIPMENT IN 1985,SIZED FOR MAXIMUM THROUGHPUT 1985 TO 1990

SUBSYSTEM =	1	2	3	4	5	6	7	8	9	10	11	12	13	14	15
NO. UNITS =	3.	3.	6.	6.	6.	6.	6.	6.	6.	6.	6.	15.	15.	15.	15.
COST FRAC.=	0.03	0.01	0.05	0.01	0.00	0.03	0.05	0.03	0.03	0.04	0.06	0.04	0.00	0.47	0.14

MATERIALS COST($)= 2852775.0
LABOR COST ($)= 2167200.0
ENGINEERING COST = 5568000.0
INSTALLATION COST= 2238000.0
TOTAL COST ($)= 12825975.0
FLOOR AREA (FT2) = 1521.0

CONSUMABLES, ($) = 3349049.0
OPERATION MAN-HRS= 248735.3
MAINTENANCE MN-HR= 17532.0

COST FOR ADDITIONAL EQUIPMENT IN 1990,SIZED FOR MAXIMUM THROUGHPUT 1990 TO 1995

SUBSYSTEM =	1	2	3	4	5	6	7	8	9	10	11	12	13	14	15
NO. UNITS =	4.	4.	8.	8.	8.	8.	8.	8.	8.	8.	8.	20.	20.	20.	20.
COST FRAC.=	0.03	0.01	0.05	0.01	0.00	0.03	0.05	0.03	0.03	0.04	0.06	0.04	0.00	0.47	0.14

MATERIALS COST($)= 3803700.0
LABOR COST ($)= 2889600.0
ENGINEERING COST = 7424000.0
INSTALLATION COST= 2984000.0
TOTAL COST ($)= 17101296.0
FLOOR AREA (FT2) = 2028.0

CONSUMABLES, ($) = 4465399.0
OPERATION MAN-HRS= 331647.0
MAINTENANCE MN-HR= 23376.0

```
          .... RECYCLED FUEL ASSEMBLY COSTS ....

COST FOR EQUIPMENT INSTALLED IN 1976,SIZED FOR MAXIMUM THROUGHPUT 1976 TO 1980
SUBSYSTEM =      1      2      3      4      5      6      7      8      9     10     11     12     13     14     15
NO. UNITS =     0.     0.     0.     0.     0.     0.     0.     0.     0.     0.     0.     0.     0.     0.     0.
COST FRAC.=   0.0    0.0    0.0    0.0    0.0    0.0    0.0    0.0    0.0    0.0    0.0    0.0    0.0    0.0    0.0
SUBSYSTEM =     16     17
NO. UNITS =     0.     0.
COST FRAC.=   0.0    0.0

MATERIALS COST($)=              0.0
LABOR COST    ($)=              0.0
ENGINEERING COST =              0.0
INSTALLATION COST=              0.0
   TOTAL COST ($)=              0.0
FLOOR AREA (FT2) =              0.0

CONSUMABLES, ($) =              0.0
OPERATION MAN-HRS=              0.0
MAINTENANCE MN-HR=              0.0

COST FOR EQUIPMENT INSTALLED IN 1980,SIZED FOR MAXIMUM THROUGHPUT 1980 TO 1985
SUBSYSTEM =      1      2      3      4      5      6      7      8      9     10     11     12     13     14     15
NO. UNITS =     0.     0.     0.     0.     0.     0.     0.     0.     0.     0.     0.     0.     0.     0.     0.
COST FRAC.=   0.0    0.0    0.0    0.0    0.0    0.0    0.0    0.0    0.0    0.0    0.0    0.0    0.0    0.0    0.0
SUBSYSTEM =     16     17
NO. UNITS =     0.     0.
COST FRAC.=   0.0    0.0

MATERIALS COST($)=              0.0
LABOR COST    ($)=              0.0
ENGINEERING COST =              0.0
INSTALLATION COST=              0.0
   TOTAL COST ($)=              0.0
FLOOR AREA (FT2) =              0.0

CONSUMABLES, ($) =              0.0
OPERATION MAN-HRS=              0.0
MAINTENANCE MN-HR=              0.0

COST FOR EQUIPMENT INSTALLED IN 1985,SIZED FOR MAXIMUM THROUGHPUT 1985 TO 1990
SUBSYSTEM =      1      2      3      4      5      6      7      8      9     10     11     12     13     14     15
NO. UNITS =    12.    12.    12.     2.     3.     3.     2.     3.     3.     3.     1.     2.     2.     2.     3.
COST FRAC.=   0.02   0.11   0.18   0.00   0.28   0.03   0.07   0.07   0.02   0.01   0.17   0.01   0.01   0.00   0.01
SUBSYSTEM =     16     17
NO. UNITS =     2.     2.
COST FRAC.=   0.01   0.00

MATERIALS COST($)=        1396055.0
LABOR COST    ($)=        2272499.0
ENGINEERING COST =        2243522.0
INSTALLATION COST=        1133769.0
   TOTAL COST ($)=        7045845.0
FLOOR AREA (FT2) =           1709.3

CONSUMABLES, ($) =         191332.4
OPERATION MAN-HRS=          32101.8
MAINTENANCE MN-HR=           4589.7

COST FOR ADDITIONAL EQUIPMENT IN 1990,SIZED FOR MAXIMUM THROUGHPUT 1990 TO 1995
SUBSYSTEM =      1      2      3      4      5      6      7      8      9     10     11     12     13     14     15
NO. UNITS =     9.     9.     9.     1.     2.     2.     1.     2.     2.     2.     1.     1.     1.     1.     2.
COST FRAC.=   0.02   0.11   0.18   0.00   0.26   0.02   0.04   0.07   0.02   0.01   0.23   0.01   0.00   0.00   0.01
SUBSYSTEM =     16     17
NO. UNITS =     2.     1.

COST FRAC.=   0.01   0.00

MATERIALS COST($)=        1027510.0
LABOR COST    ($)=        1676412.0
ENGINEERING COST =        1653586.0
INSTALLATION COST=         835645.0
   TOTAL COST ($)=        5193153.0
FLOOR AREA (FT2) =           1337.8

CONSUMABLES, ($) =         128334.2
OPERATION MAN-HRS=          20698.7
MAINTENANCE MN-HR=           3061.9
```

.... FUEL ROD MFG.,RECYCLED FUEL ....

COST FOR EQUIPMENT INSTALLED IN 1976,SIZED FOR MAXIMUM THROUGHPUT 1976 TO 1980

SUBSYSTEM =	1	2	3	4	5	6	7	8	9	10	11	12	13	14	15
NO. UNITS =	0.	0.	0.	0.	0.	0.	0.	0.	0.	0.	0.	0.	0.	0.	0.
COST FRAC.=	0.0	0.0	0.0	0.0	0.0	0.0	0.0	0.0	0.0	0.0	0.0	0.0	0.0	0.0	0.0

MATERIALS COST($)= 0.0
LABOR COST ($)= 0.0
ENGINEERING COST = 0.0
INSTALLATION COST= 0.0
TOTAL COST ($)= 0.0
FLOOR AREA (FT2) = 0.0

CONSUMABLES, ($) = 0.0
OPERATION MAN-HRS= 0.0
MAINTENANCE MN-HR= 0.0

COST FOR EQUIPMENT INSTALLED IN 1980,SIZED FOR MAXIMUM THROUGHPUT 1980 TO 1985

SUBSYSTEM =	1	2	3	4	5	6	7	8	9	10	11	12	13	14	15
NO. UNITS =	0.	0.	0.	0.	0.	0.	0.	0.	0.	0.	0.	0.	0.	0.	0.
COST FRAC.=	0.0	0.0	0.0	0.0	0.0	0.0	0.0	0.0	0.0	0.0	0.0	0.0	0.0	0.0	0.0

MATERIALS COST($)= 0.0
LABOR COST ($)= 0.0
ENGINEERING COST = 0.0
INSTALLATION COST= 0.0
TOTAL COST ($)= 0.0
FLOOR AREA (FT2) = 0.0

CONSUMABLES, ($) = 0.0
OPERATION MAN-HRS= 0.0
MAINTENANCE MN-HR= 0.0

COST FOR EQUIPMENT INSTALLED IN 1985,SIZED FOR MAXIMUM THROUGHPUT 1985 TO 1990

SUBSYSTEM =	1	2	3	4	5	6	7	8	9	10	11	12	13	14	15
NO. UNITS =	1.	1.	2.	2.	2.	2.	2.	2.	2.	2.	2.	6.	6.	6.	6.
COST FRAC.=	0.03	0.01	0.04	0.01	0.00	0.03	0.05	0.02	0.03	0.03	0.05	0.04	0.00	0.50	0.15

MATERIALS COST($)= 1080870.0
LABOR COST ($)= 814000.0
ENGINEERING COST = 2101600.0
INSTALLATION COST= 844700.0
TOTAL COST ($)= 4841170.0
FLOOR AREA (FT2) = 573.0

CONSUMABLES, ($) = 1132420.0
OPERATION MAN-HRS= 95695.5
MAINTENANCE MN-HR= 6391.9

COST FOR ADDITIONAL EQUIPMENT IN 1990,SIZED FOR MAXIMUM THROUGHPUT 1990 TO 1995

SUBSYSTEM =	1	2	3	4	5	6	7	8	9	10	11	12	13	14	15
NO. UNITS =	1.	1.	2.	2.	2.	2.	2.	2.	2.	2.	2.	4.	4.	4.	4.
COST FRAC.=	0.03	0.01	0.06	0.01	0.01	0.03	0.06	0.03	0.03	0.04	0.07	0.04	0.00	0.44	0.13

MATERIALS COST($)= 820980.0
LABOR COST ($)= 630800.0
ENGINEERING COST = 1610400.0
INSTALLATION COST= 647300.0
TOTAL COST ($)= 3709480.0
FLOOR AREA (FT2) = 441.0

CONSUMABLES, ($) = 1100278.0
OPERATION MAN-HRS= 70128.0
MAINTENANCE MN-HR= 5296.1

REFERENCES

1. Public Service Company of Colorado, Fort St. Vrain Nuclear Generating Station, Final Safety Analysis Report.

2. Delmarva Power and Light Company, Summit Power Station, Preliminary Safety Analysis Report.

3. Philadelphia Electric Company, Fulton Generating Station, Preliminary Safety Analysis Report.

4. J. L. Scott et al., *Performance of Candidate HTGR Fuels in Fuel Rod Irradiations in HFIR*, ORNL/TM-4554 (October 1974).

5. Office of Planning and Analysis, U.S. Atomic Energy Commission, *Nuclear Power 1973–2000*, WASH-1139(72) (Dec. 1, 1972).

6. Office of Planning and Analysis, U.S. Atomic Energy Commission, *Nuclear Power Growth 1974–2000*, WASH-1139(74) (February 1974).

7. J. W. Snider and D. C. Watkin, *An Evaluation of HTGR Primary Burning*, ORNL/TM-4520 (November 1974).

8. J. T. Long, *Engineering for Nuclear Fuel Reprocessing*, p. 690, Gordon and Breach Science Publishers, Inc., New York, 1967.

9. M. R. Hertz, W. S. Stringham, and R. M. Watrous, *A Solvent Extraction Method for the Recovery of Thorium-229 from Aged Uranium-233*, MLM-2151 (Jan. 31, 1975).

10. Public Service Company of Colorado, *330-MW(e) High-Temperature Gas-Cooled Reactor Research and Development Program*, GA-A12200, Table 2.3 (June 30, 1972).

11. T. B. Fowler, D. R. Vondy, and G. W. Cunningham, *Nuclear Reactor Core Analysis Code: CITATION*, ORNL/TM-2496, Rev. 2 (July 1971).

12. A. Baxter, General Atomic Company, personal communication to M. L. Tobias, Oak Ridge National Laboratory, 1975.

13. H. Etherington (Ed.), *Nuclear Engineering Handbook*, Sect. 7–15, McGraw-Hill, New York, 1958.

ORNL/TM-5125

UC-77 — Gas-Cooled Reactor Technology

Internal Distribution

1. E. J. Allen
2. T. E. Cole
3. J. H. Coobs
4. W. E. Cooper
5. W. B. Cottrell
6. F. L. Culler
7. F. C. Davis
8. W. P. Eatherly
9. G. G. Fee
10. M. H. Fontana
11. Uri Gat
12. M. J. Goglia
13. C. C. Haws
14. H. W. Hoffman
15. F. J. Homan
16. J. P. Jarvis
17. J. D. Jenkins
18. M. S. Judd
19-56. P. R. Kasten
57. H. T. Kerr
58. R. W. Knoll
59. K. H. Lin
60. A. L. Lotts
61. R. E. MacPherson
62. W. J. McCarthy, Jr.
63. S. R. McNeany
64. K. J. Notz
65. A. R. Olsen
66. W. H. Pechin
67. H. Postma
68. G. L. Ragan
69. J. E. Rushton
70. J. P. Sanders
71. Dunlap Scott
72. J. D. Sease
73. Myrtleen Sheldon
74. J. W. Snider
75. I. Spiewak
76. J. J. Taylor
77-81. W. E. Thomas
82. M. L. Tobias
83. D. B. Trauger
84. T. N. Washburn
85. G. D. Whitman
86. W. J. Wilcox
87. R. G. Wymer
88. R. M. Young
89. ORNL Patent Office
90-91. Central Research Library
92. Document Reference Section
93-95. Laboratory Records Department
96. Laboratory Records (RC)

External Distribution

97-98. Director, Division of Nuclear Research and Application, ERDA, Washington, D.C. 20545
99. Director, Reactor Division, ERDA, ORO
100. Director, Research and Technical Support Division, ERDA, ORO
101-267. Technical Information Center, ERDA [For distribution as shown in TID-4500 under category UC-77, Gas-Cooled Reactor Technology (25 copies — NTIS)]

☆ U.S. GOVERNMENT PRINTING OFFICE: 1976-748-189/335