CENTRAL RESEARCH LIBRARY

OAK RIDGE NATIONAL LABORATORY LIBRARIES
3 4456 0550918 9

ORNL/TM-5136

Cy 1

Status Report on Structural Materials of HTGR Primary System Components

P. L. Rittenhouse C. S. Morgan

OAK RIDGE NATIONAL LABORATORY
CENTRAL RESEARCH LIBRARY
DOCUMENT COLLECTION
LIBRARY LOAN COPY
DO NOT TRANSFER TO ANOTHER PERSON
If you wish someone else to see this document, send in name with document and the library will arrange a loan.
UCN-7969
(3 3-67)

OAK RIDGE NATIONAL LABORATORY
OPERATED BY UNION CARBIDE CORPORATION • FOR THE U.S. ATOMIC ENERGY COMMISSION

Printed in the United States of America. Available from
National Technical Information Service
U.S. Department of Commerce
5285 Port Royal Road, Springfield, Virginia 22161
Price: Printed Copy $5.00; Microfiche $2.25

This report was prepared as an account of work sponsored by the United States Government. Neither the United States nor the Energy Research and Development Administration, nor any of their employees, nor any of their contractors, subcontractors, or their employees, makes any warranty, express or implied, or assumes any legal liability or responsibility for the accuracy, completeness or usefulness of any information, apparatus, product or process disclosed, or represents that its use would not infringe privately owned rights.

ORNL/TM-5136
(UC-77 Gas-Cooled
Reactor Technology)

Contract No. W-7405-eng-26

METALS AND CERAMICS DIVISION

STATUS REPORT ON STRUCTURAL MATERIALS OF HTGR PRIMARY SYSTEM COMPONENTS

P. L. Rittenhouse and C. S. Morgan

JANUARY 1976

OAK RIDGE NATIONAL LABORATORY
Oak Ridge, Tennessee 37830
operated by
UNION CARBIDE CORPORATION
for the
U.S. ENERGY RESEARCH AND DEVELOPMENT ADMINISTRATION

OAK RIDGE NATIONAL LABORATORY LIBRARIES

3 4456 0550918 9

CONTENTS

ABSTRACT 1
INTRODUCTION 1
HTGR METALLIC MATERIALS AND COMPONENTS 2
Thermal Barriers 2
Main Helium Circulators 3
Steam Generators 5
Auxiliary Cooling System 9
Core Components 9
Core Lateral Restraint Structure 13
Design and Materials 13
Materials Technology 14
Potential Areas of Concern 17
BORONATED GRAPHITE CONTROL COMPONENTS 18
Control Rods 18
Burnable Poison Rods 20
Boronated Shield 21
Reserve Shutdown System 21
Upper Plenum Elements 21
Effects of Environment on Boronated Graphite 22
Oxidation 22
Irradiation 23
Potential Problem Areas 24
Control Material Containers 24
Reserve Shutdown System 25
ASSESSMENT EFFORTS DURING FY 1976 25
Progress on Previously Identified Information Needs 25
Impact of HTGR Materials Data Needs on Safety Analyses 26
Core Support Ceramics 26
Thermal Barrier Insulating Materials 27

STATUS REPORT ON STRUCTURAL MATERIALS OF HTGR PRIMARY SYSTEM COMPONENTS

P. L. Rittenhouse and C. S. Morgan

ABSTRACT

This document reports on our continuing assessments of the status of technology of high-temperature gas-cooled reactor primary system structural materials and the implications of these in the prediction of component integrity and performance as related to safety. An update of relevant information on the metallic materials used in the primary system is provided along with the results of our initial assessment efforts on the core lateral restrain structure and control material components. No new materials-related safety questions of great urgency were encountered in the course of these studies but several items needing further consideration and investigation were identified. Assessment efforts to be undertaken during FY 1976 are described briefly.

INTRODUCTION

This report describes the results of ongoing assessments of the technology of the structural materials to be used in the construction of components of the large high-temperature gas-cooled reactor (HTGR) primary system. These assessments are intended to aid in the determination of areas in which further work or study may lead to substantial improvements in safety.

In a previous report,[1] we discussed most of the metallic materials used in HTGR thermal barriers, circulators, steam generators, the auxiliary cooling systems, and core components. Reference will be made to this report in many instances. Additionally, we discussed the effects of HTGR primary coolant environment on materials behavior, material and component information needs and priorities, and relevant work in progress. Our assessment has been broadened in scope (both components and materials) and now includes evaluations of control materials, ceramics, graphites, insulators, and the core lateral restraint system.

Information on several additional metallic materials pertinent to the HTGR primary system components covered previously[1] will be presented here along with an updating of other information contained therein where

---

[1]P. L. Rittenhouse, *Initial Assessment of the Status of HTGR Metallic Structural Material Technology*, ORNL-TM-4760 (December 1974).

applicable. Our initial findings on control components (control rod, burnable poison, reflectors, and emergency shutdown) and the core lateral restraint structure are also presented in this report. Finally, future assessment efforts on materials technology will be described briefly.

As previously,[1] we warn that this report does not guarantee the identification of all information needs related to HTGR structural materials and safety. Furthermore, some of the needs, questions, etc. posed herein may have been satisfied or answered elsewhere. We believe, however, that the information and discussions that follow provide an improved basis for the understanding and development of materials technology as related to HTGR safety.

HTGR METALLIC MATERIALS AND COMPONENTS

Components (and their materials of construction) treated before[1] were (1) thermal barriers, (2) main helium circulators, (3) steam generators, (4) auxiliary cooling systems, and (5) core components. Continued assessments over the past year have resulted in the identification of several additional alloys that are proposed for use in (2) and (3) above. Discussion of these materials and other new information applicable to HTGR primary system components are presented in this section. Additionally, description and discussion of the core lateral restraint structure and materials, which were not covered previously,[1] are included.

Thermal Barriers

The materials and design of the thermal barrier systems remain, for the most part, identical to the earlier descriptions.[1] An area of potential concern, has, however, recently come to light. It involves the possibility of corner sag of cover plates of the Class A thermal barrier on the upper head, especially during off-normal temperature excursions. The subject cover plates, low-carbon steel (AISI 1010/1020) sheets some 42 in. (1.07 m) square, are fixed to the PCRV liner with a central attachment fixture and four edge fixtures shared between adjacent plates at the mid-length of each edge.[2] (This is a slightly different design than that presented in Fig. 1 of Ref. 1.) In the current design, the corners of the plates are not rigidly supported and are, therefore, subjected to loading from the weight of the plate and the springback of the compressively loaded thermal insulation. Corner sag is of concern because it could allow channeling of hot helium behind the thermal barrier. If, as a result of future analysis, corner sag of these cover plates seems to be a real concern, it could — in principle — be rather easily compensated for by fixture redesign or by the selection of a steel of higher

---

[2] *General Atomic Standard Safety Analysis Report (GASSAR-6)*, GA-A-13200.

strength. Finally, a similar problem — with a possibly similar solution — could exist with the higher temperature Class B thermal barrier in the hot duct to the steam generator.

A joint General Atomic Company (GAC)/Commisariat a l'Energie Atomique (CEA) component testing program on thermal barriers is in progress at Saclay in France.[3] A 0.6-scale test (CHELA Loop) of the HTGR hot duct and thermal barrier was assembled in late 1974, and work on a full-scale test (CARMEN 2 Loop) was in progress. These tests are designed to verify the thermal and mechanical performance of the hot-duct assembly under reactor operating conditions; therefore, appropriate temperatures, pressures, etc. are simulated. After a planned period of "normal" operation (up to 20,000 hr), the effects of several off-design conditions (e.g., abnormal cycling and bypass of hot helium behind the cover plates) on performance will be evaluated. Additionally, tests are planned to determine the effects of accident conditions (i.e., transients to high temperatures) on thermal-barrier integrity. Although this latter point bears on the question of confirmation of thermal barrier cover plate *damage* and *failure* strains that was raised previously,[1] these tests are not, at present, designed to produce the information that would be needed for such confirmation.

Main Helium Circulators

Circulator design and potential areas of concern related to circulator materials were discussed.[1] However, two additional materials should be mentioned. The first, ASTM A 473 type 405, is a ferritic stainless steel that is to be used in ducting and in structural supports. Composition and minimum tensile properties of type 405 stainless steel forgings — the product form of the ASTM specification — are given in Table 1. Design stresses for type 405 stainless steel plate (ASME SA-240), taken from Sect. III of the ASME Code,[4] are shown in Table 2. The material is qualified for use to 427°C (800°F) in Class 1 nuclear components and to 371°C (700°F) for Class 2 and 3 nuclear components. The component design temperature is 343°C (650°F). Forgings of this material are not covered in Sect. III. No problems of safety significance associated with the use of this alloy are foreseen.

We reported[1] that "Inconel 718 is used for the shutdown seal and bellows of the main primary coolant shutoff valve." More recent information, while again identifying Inconel 718 as the material of the main circulator shutdown valve, gives Inconel X-750 as the shutdown seal and bellows material for this valve. Composition and minimum tensile properties of Inconel X-750, an age-hardenable nickel-chromium alloy, are shown

---

[3]Private communication with G. Jones, GAC resident engineer at Saclay.

[4]*ASME Boiler and Pressure Vessel Code,* "Sect. III — Division 1: Rules for Construction of Nuclear Power Plant Components. Subsection NA: General Requirements," American Society of Mechanical Engineers, New York, 1974.

Table 1. Properties of Circulator Materials

Designation	Composition (wt %)	Minimum Room-Temperature Properties			
		Strength, ksi (MPa)		Total Elongation in 2 in. (%)	Reduction of Area (%)
		0.2% Offset Yield	Ultimate Tensile		
ASTM A 473 Type 405 Stainless Steel	0.08 C max 1.0 Mn max 0.04 P max 0.03 S max 1.0 Si max 0.6 Ni max 11.5–14.5 Cr 0.1–0.3 Al Bal. Fe	30 (207)	60 (414)	20	45
ASME Code Case 1344-5, Alloy X-750 and ASME SA-637	0.08 C max 1.0 Mn max 0.01 S max 0.5 Si max 0.5 Cu max 1.0 Co max 70.0 (Ni+Co) min 14.0–17.0 Cr 5.0–9.0 Fe 2.25–2.75 Ti 0.40–1.0 Al 0.7–1.2 (Nb+Ta)	40 (276)[a] 90 (621)[b] 115 (793)[c]	100 (689)[a] 140 (965)[b] 170 (1172)[c]	20[a] 8[b] 15–18[c]	

[a]Solution treated condition: 954°C (1750°F), air cool.

[b]Type 1 condition: 1149°C (2100°F), 2 to 4 hr, air cool + 816°C (1500°F), 24 hr, air cool + 704°C (1300°F), 20 hr, air or furnace cool.

[c]Type 2 condition: 982°C (1800°F), 0.5 hr, air cool + 732°C (1350°F), 8 hr, furnace cool to 621°C (1150°F), hold to total of 18 hr precipitation time, air cool.

Table 2. Design Stresses[a] for Type 405 Stainless Steel Plate (ASME Sa-240)

Temperature		Design Stress, ksi (MPa)		
(°C)	(°F)	S_y[b]	S_m[c]	S[d]
38	100	25.0 (172)	16.7 (115)	15.0 (103)
93	200	23.0 (159)	15.9 (110)	14.3 (99)
149	300	22.2 (153)	15.4 (106)	13.8 (95)
204	400	21.8 (150)	14.9 (103)	13.3 (92)
260	500	21.5 (148)	14.5 (100)	12.8 (88)
316	600	21.0 (145)	14.0 (97)	12.4 (85)
343	650	20.7 (143)	13.9 (96)	12.2 (84)
371	700	20.2 (139)	13.7 (94)	12.0 (83)
399	750	19.6 (135)	13.6 (94)	
427	800	18.9 (130)	13.4 (92)	
454	850	18.0 (124)		
482	900	16.9 (117)		
510	950	15.8 (109)		
538	1000	14.4 (99)		

[a]From *ASME Boiler and Pressure Vessel Code*, "Sect. III — Division 1: Rules for Construction of Nuclear Power Plant Components. Subsection NA: General Requirements," American Society of Mechanical Engineers, New York, 1974.

[b]Yield strength value for Class 1 components. Minimum specified yield for SA-240 plate at room temperature is 25 vs 30 ksi (132 vs 207 MPa) specified for ASTM A 473 (see Table 1).

[c]Design stress intensity value for Class 1 components.

[d]Allowable stress value for Class 2 and 3 components.

in Table 1. Yield strength values for solution treated and precipitation hardened materials are given in Table 3, and design stresses are presented in Table 4. An excellent review of the engineering properties etc. of Inconel X-750 can be found elsewhere.[5] The service temperature for the seals and bellows is approximately 650°F, well below temperatures where significant creep, environmental effects, or thermal aging should occur.

Steam Generators

Considerable redesign of the HTGR steam generator is currently in progress.[6] The new design will likely have a U-tube reheater section and an additional superheater section. Completion of these design activities is scheduled for December 1975. Although the major materials in the HTGR steam generator heat transfer sections (i.e., 2 1/4 Cr-1 Mo steel and Incoloy Alloy 800H) will not be changed in the new design, Incoloy 800H has been replaced by type 304 stainless steel for the outer shroud. Additionally, type 304 stainless steel will be used as tube protection sleeves. Both applications are for 760°C (1400°F) in primary coolant helium only. Another new material, Inconel 617, is to be used (760°C in helium) in steam generator tube-protection devices. These materials are discussed below.

Type 304 austenitic stainless steel is one of the few materials (in addition to 2 1/4 Cr-1 Mo steel, type 316 stainless steel, and Incoloy Alloy 800H) that is qualified under ASME rules for use in Class 1 nuclear components at temperatures above 427°C (800°F). Composition and ASME specified minimum room-temperature tensile properties for plate material (ASME SA-240, type 304) are shown in Table 5; ASME design stresses are given in Table 6. Because of the high service temperature [760°C (1400°F)] for this application, environmental effects (i.e., helium corrosion and possible consequent degradation of properties) should be considered in design and safety analyses.

Inconel 617, to be used in steam generator tube-protection devices, is a relatively new solid-solution-strengthened Ni-Cr-Co-Mo alloy. There are currently no ASTM or ASME specifications applicable to this alloy. Nominal composition and typical room-temperature properties quoted by Huntington Alloys[7] are given in Table 5. Yield and tensile strengths at 760°C (1400°F) are nominally 30 and 65 ksi (207 and 448 MPa), respectively, with total elongation about 70%. Stress to cause rupture in 10,000 hr at 760°C is in excess of 10 ksi (69 MPa). Thermal stability of the alloy is stated as good and is evidenced by a 70 ft-lb (95 J) room-temperature

---

[5] *Engineering Properties of Inconel Alloy X-750*, Tech. Bull. T-38, Huntington Alloy Products Division, International Nickel Co., 1963.

[6] Private communications with D. I. Roberts and P. D. Hedgecock, General Atomic Company.

[7] *Inconel Alloy 617*, Huntington Alloy Products Division, International Nickel Co., 1972.

Table 3. Yield Strength Values for Alloy X-750[a]

Temperature		Yield Strength, ksi (MPa)		
(°C)	(°F)	Solution Treated[b]	Type 1[c]	Type 2[d]
38	100	40.0 (276)	90.0 (621)	115.0 (793)
93	200	39.1 (270)	87.7 (605)	112.0 (772)
149	300	38.3 (264)	86.4 (596)	110.2 (760)
204	400	37.6 (259)	85.3 (588)	109.0 (752)
260	500	36.9 (254)	84.5 (583)	108.0 (745)
316	600	36.4 (251)	84.1 (580)	107.5 (741)
343	650	36.2 (250)	83.9 (578)	107.2 (739)
371	700	36.0 (248)	83.8 (578)	107.0 (738)
399	750	35.9 (248)	83.7 (577)	106.9 (737)
427	800	35.7 (246)	83.6 (576)	106.8 (736)
454	850		83.5 (576)	106.6 (735)
482	900		83.1 (573)	106.2 (732)
510	950		82.8 (571)	105.7 (729)
538	1000		82.2 (567)	105.0 (724)

[a]From Code Case 1344-5 of *ASME Boiler and Pressure Vessel Code 1974* Code Cases.

[b]954°C (1750°F), air cool.

[c]1149°C (2100°F), 2 to 4 hr, air cool + 816°C (1500°F), 24 hr, air cool + 704°C (1300°F), 20 hr, air or furnace cool.

[d]982°C (1800°F), 0.5 hr, air cool + 732°C (1350°F), 8 hr, furnace cool to 621°C (1150°F), hold to total of 18 hr precipitation time, air cool.

Table 4. Design Stresses[a] for Alloy X-750

Temperature		S_m[b], ksi (MPa)			S[c], ksi (MPa)		
(°C)	(°F)	Solution[d] Treated	Type[e] 1	Type[f] 2	Solution[d] Treated	Type[e] 1	Type[f] 2
≤38	≤100	26.7 (184)	46.7 (322)	56.7 (391)	25.0 (172)	35.0 (241)	42.5 (293)
93	200	26.1 (180)	46.7 (322)	56.7 (391)	24.4 (168)	35.0 (241)	42.5 (293)
149	300	25.5 (176)	46.7 (322)	56.7 (391)	23.9 (165)	35.0 (241)	42.5 (293)
204	400	25.1 (173)	46.7 (322)	56.7 (391)	23.5 (162)	35.0 (241)	42.5 (293)
260	500	24.6 (170)	46.7 (322)	56.7 (391)	23.0 (159)	35.0 (241)	42.5 (293)
316	600	24.3 (167)	46.7 (322)	56.7 (391)	22.7 (157)	35.0 (241)	42.5 (293)
343	650	24.1 (166)	46.7 (322)	56.7 (391)	22.6 (156)	35.0 (241)	42.5 (293)
371	700	24.0 (165)	46.7 (322)	56.7 (391)	22.5 (155)	35.0 (241)	42.5 (293)
399	750	23.9 (165)	46.7 (322)	56.7 (391)	22.4 (154)	35.0 (241)	42.5 (293)
427	800	23.8 (164)	46.5 (321)	56.7 (391)	22.3 (154)	35.9 (248)	42.4 (292)

[a]From Code Case 1344-5 of *ASME Boiler and Pressure Vessel Code 1974* Code Cases.

[b]Design stress intensity value for Class 1 and Class CS components.

[c]Allowable stress for Class 2, 3, and MC components

[d]954°C (1750°F), air cool.

[e]1149°C (2100°F), 2 to 4 hr, air cool + 816°C (1500°F), 24 hr, air cool + 704°C (1300°F), 20 hr, air or furnace cool.

[f]982°C (1800°F), 0.5 hr, air cool + 732°C (1350°F), 8 hr, furnace cool to 621°C (1150°F), hold to total precipitation time of 18 hr, air cool.

Table 5. Properties of Steam Generator Materials

Designation	Composition (wt %)	Room-Temperature Properties		
		Strength, ksi (MPa)		Total Elongation in 2 in. (%)
		0.2% Offset Yield	Ultimate Tensile	
ASME SA-240 Type 304 Stainless Steel	0.08 C max 2.00 Mn max 0.045 P max 0.030 S max 1.00 Si max 18.0–20.0 Cr 8.0–10.5 Ni Bal. Fe	30.0 (207)[a]	75.0 (517)[a]	40.0[a]
Inconel Alloy 617	54 Ni[b] 22 Cr 12.5 Co 9.0 Mo 1.0 Al 0.07 C	42.9 (296)[c]	106.6 (735)[c]	70[c]

[a]Minimum properties from *ASME Boiler and Pressure Vessel Code*, Sect. II, Part A.

[b]Nominal composition as given in *Inconel Alloy 617*, Huntington Alloy Products Division, International Nickel Co., 1972.

[c]Typical properties of hot-rolled, solution-treated rod.

Table 6. Design Stresses for Type 304 Stainless Steel (ASME SA-240)

Temperature		Design Stresses, ksi (MPa)				
(°C)	(°F)	S_y [a,b]	S_m [a,c]	S [a,d]	S_0 [e,f]	S_{mt} [e,g]
38	100	30.0 (207)	20.0 (138)	18.8 (130)		
93	200	25.0 (172)	20.0 (138)	17.8 (123)		
149	300	22.5 (155)	20.0 (138)	16.6 (114)		
204	400	20.7 (143)	18.7 (129)	16.2 (112)		
260	500	19.4 (134)	17.4 (120)	15.9 (110)		
316	600	18.2 (125)	16.4 (113)	15.9 (110)		
343	650	17.9 (123)	16.1 (111)	15.9 (110)		
371	700	17.7 (122)	15.9 (110)			
399	750	17.3 (119)	15.5 (107)			
427	800	16.8 (116)	15.1 (104)		15.1 (104)	15.1 (104)
454	850	16.5 (114)			14.9 (103)	14.8 (102)
482	900	16.2 (112)			14.6 (101)	14.6 (101)
510	950	15.9 (110)			14.3 (99)	12.2 (84)
538	1000	15.6 (108)			13.7 (94)	9.3 (64)
566	1050				12.1 (83)	7.3 (50)
593	1100				9.7 (67)	5.7 (39)
621	1150				7.7 (53)	4.4 (30)
649	1200				6.0 (41)	3.4 (23)
677	1250				4.7 (32)	2.7 (19)
704	1300				3.7 (26)	2.1 (14)
732	1350				2.9 (20)	1.6 (11)
760	1400				2.3 (16)	1.2 (8)
788	1450				1.8 (12)	0.9 (6)
816	1500				1.4 (10)	0.6 (4)

[a]From *ASME Boiler and Pressure Vessel Code*, "Sect. III-Division 1, Subsection NA," 1974 edition.

[b]Yield strength values.

[c]Design stress intensity value for Class 1 components.

[d]Allowable stress value for Class 2 and 3 components.

[e]From Code Case 1592 of *ASME Boiler and Pressure Vessel Code 1974* Code Cases.

[f]Allowable value of primary general membrane stress intensity under Design Conditions.

[g]Allowable limit of primary general membrane stress at 300,000 hr under service life and normal-plus-upset conditions.

Charpy V-notch impact strength after a 1000-hr exposure at 760°C. Gas-carburization tests have shown Inconel 617 to be more resistant to carburization than Incoloy 800. Although the current application for Inconel 617 in the HTGR steam generator is not a critical one in terms of safety, collection and correlation of additional property data and evaluation of environmental effects will be necessary to qualify this material for the intended use.

One of the recommendations made previously[8] was for an evaluation of steam generator materials behavior under transient temperatures and stresses caused by a loss-of-forced-circulation accident in which steam generator isolation valves fail to close. Ongoing ERDA-RRD-sponsored HTGR safety assessments at ORNL are currently addressing the question of overall steam generator behavior under abnormal conditions. This, of course, involves consideration of materials behavior. A preliminary report on the subject assessment is scheduled for the summer of 1975. A more detailed analysis of the need for materials behavior evaluations under these conditions will be made on the basis of the assessment report.

Auxiliary Cooling System

Our descriptions and discussions[8] covering the HTGR auxiliary cooling system are applicable without change.

Core Components[9]

We discussed control rods, plenum elements, and flow-control orifices under the heading of Core Components.[8] Additional information relative to HTGR control rods will be given in a section on Control Materials later in this report. An update of information on the plenum elements and the flow-control orifices (valves) is provided here.

The plenum elements (see Figs. 1 and 2) are open on the side toward the flow-control valve and, clustered together, form a plenum that covers each core region. Boronated graphite is contained within the elements to provide neutron shielding (top reflector surface). A control plenum element (Fig. 3) is aligned atop each control fuel column (Fig. 2) and centered among the plenum elements. It has receptacles that mate with the guide tubes for the control rods and the reserve shutdown system. The flow-control valve previously discussed[8] sits atop this element (see Fig. 2). Keys are used on the six plenum elements; each fits into a slot provided in the adjacent element within a region so that each element has one key and one keyway.

---

[8]P. L. Rittenhouse, *Initial Assessment of the Status of HTGR Metallic Structural Material Technology*, ORNL-TM-4760 (December 1974).

[9]Based on *General Atomic Standard Safety Analysis Report (GASSAR-6)*, GA-A-13200.

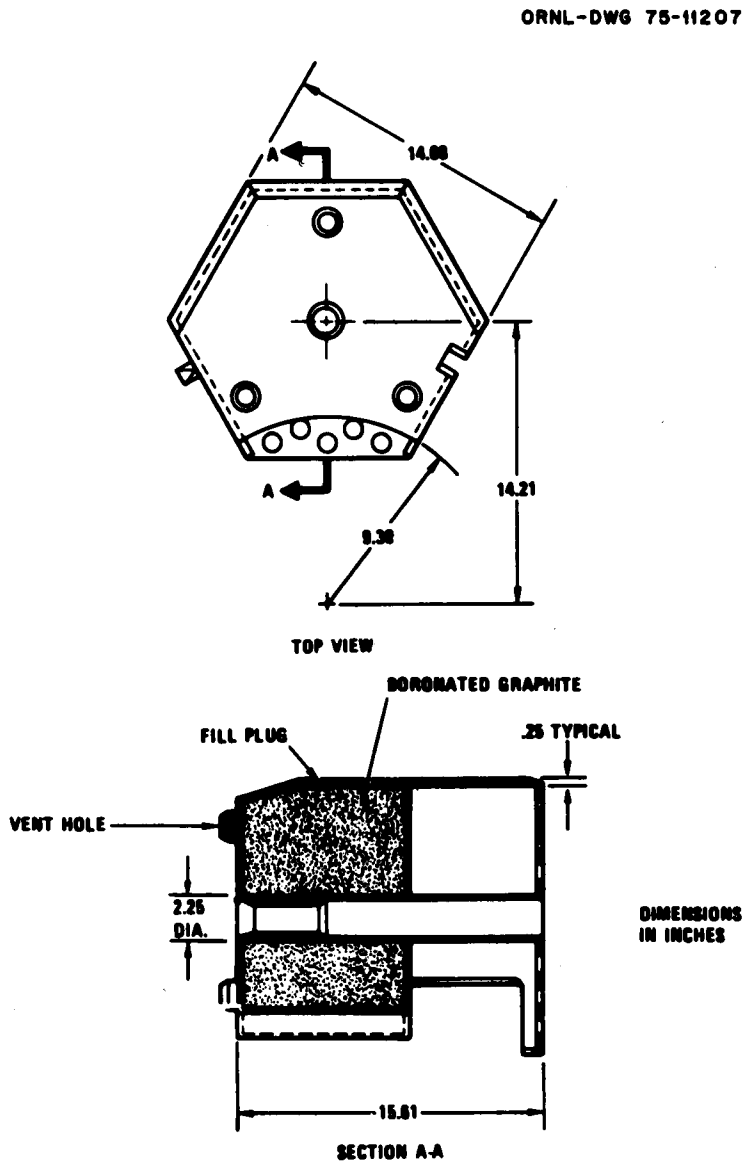

Fig. 1. Plenum Element. To convert dimensions to millimeters, multiply by 25.4. Adapted from General Atomic Co. drawing taken from *General Atomic Standard Safety Analysis Report (GASSAR-6)*, GA-A-13200.

ORNL-DWG 75-11209

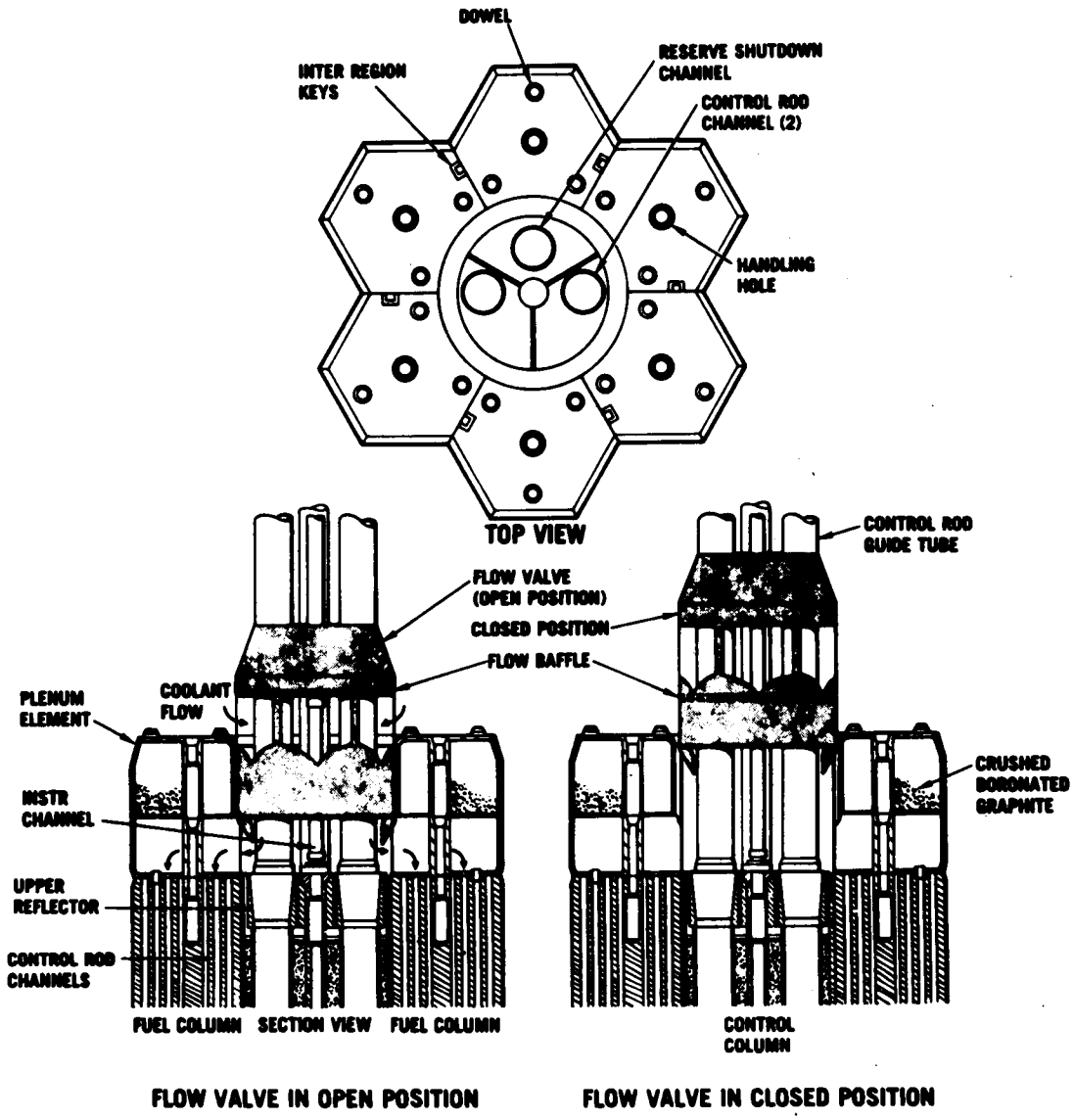

Fig. 2. Flow Control Valve and Plenum Arrangement. Copied from General Atomic Co. drawing taken from *General Atomic Standard Safety Analysis Report (GASSAR-6)*, GA-A-13200.

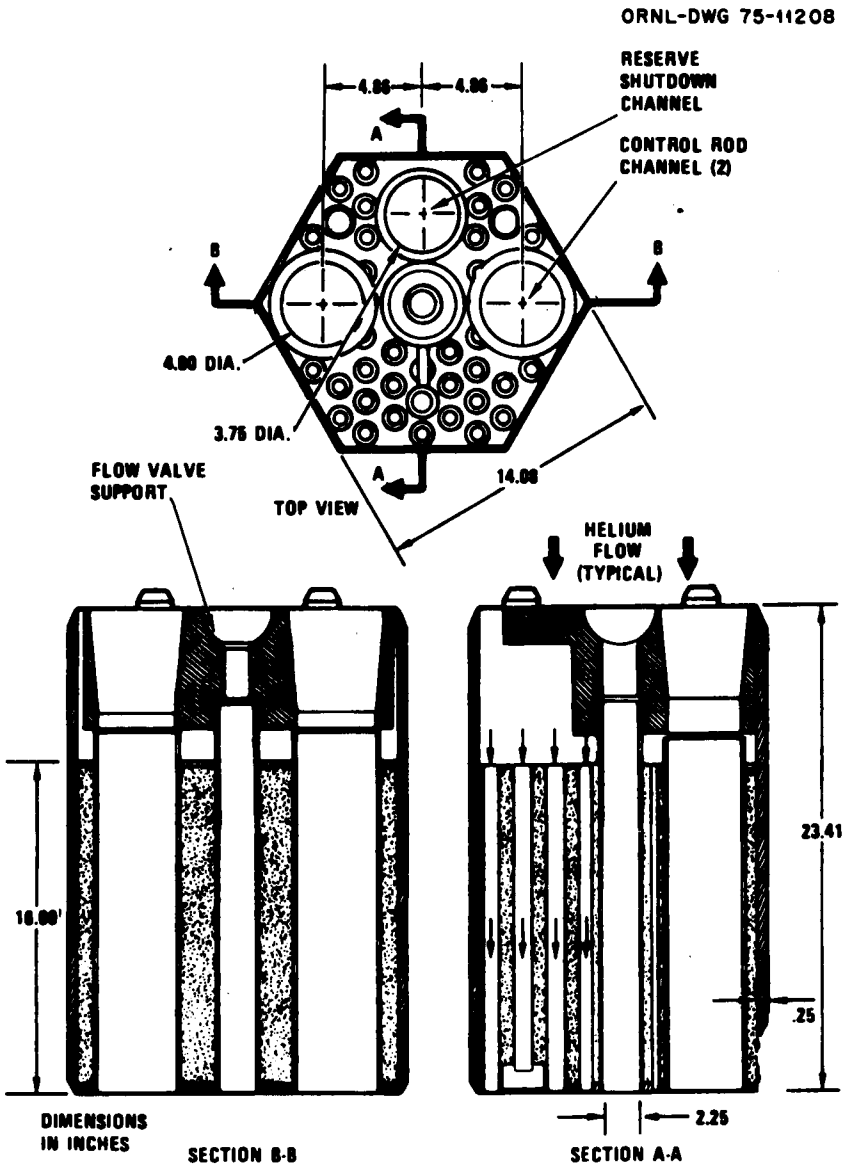

Fig. 3. Control Plenum Element. To convert dimensions to millimeters, multiply by 25.4. Adpated from General Atomic Co. drawing taken from *General Atomic Standard Safety Analysis Report (GASSAR-6)*, GA-A-13200.

The material used for the plenum and control plenum elements is type 316 stainless steel. (Both types 316 and 321 stainless steel were indicated[8] as possibilities.) We previously[8] gave the temperature range for normal operation as from approximately 338 to 538°C (640–1000°F) as opposed to the 399°C (750°F) design temperature. However, the higher temperature represents conditions for short-duration transients. The maximum expected fluence to these components is estimated as 10^{21} n/cm^2 (>0.18 MeV). Fluences of this magnitude should have only very small effects on material properties.

Core Lateral Restraint Structure[9]

Design and Materials

The core lateral restraint structure is designed to provide lateral support for and to restrain the core and permanent side reflectors. It is composed of 252 metal support assemblies welded to the PCRV liner (see Fig. 4). Each assembly consists of a 14-in.-diam (0.36-m) pipe (spring housing) of Grade 1 Incoloy 800 (Incoloy Alloy 800 as opposed to Alloy 800H), which houses a spring pack of Inconel 718 coil springs. The springs are attached to circular bearing plates (Grade 1 Incoloy 800), which, in turn, are mechanically fastened to and carry the weight of the boronated shields. A segmented core barrel, which functions as a gamma shield, is designed as part of the core lateral restraint structure but has no structural task except to support its own weight. This core barrel consists of 252 rectangular SA-285 Grade B steel plates — each of which is supported by a lateral restraint assembly — located between the boronated shield and the PCRV liner thermal barrier. Although the principal function of the core lateral restraint structure is to laterally restrain the core — that is, to limit both radial outward movement and tangential displacement to 1 1/2 in. (38 mm) — under all conditions, it also provides for an initial location of core components within a radial tolerance of ±1/8 in. (3.2 mm).

A small amount of primary coolant at core inlet conditions passes through the annular gap between the boronated shields and the segmented core barrel to cool the lateral restraint structure. Part of this flows radially inward into the core; the remainder continues to the bottom and exits into the lower plenum through the gap between the core support structure and the thermal barrier. This latter flow is limited to 1.5% of the total coolant flow by use of a peripheral seal with controlled leakage. Design temperatures under normal operating conditions range from 377°C (710°F) for the segmented core barrel to 510°C (950°F) for the bearing plates. The spring temperature is 504°C (940°F) and that of the spring housing is 404°C (760°F). Under emergency conditions, design temperatures are 566°C (1050°F) for the core barrel, 599°C (1110°F) for the spring housing, and 760°C (1400°F) for the springs and bearing plates.

All the metallic components of the core lateral restraint structure are designed to the rules of Section III, Subsection NG of the ASME Code. Radiation damage to the materials in this structure is considered to be insignificant since the calculated maximum effective fast neutron fluence is 2.16×10^{18} n/cm^2.

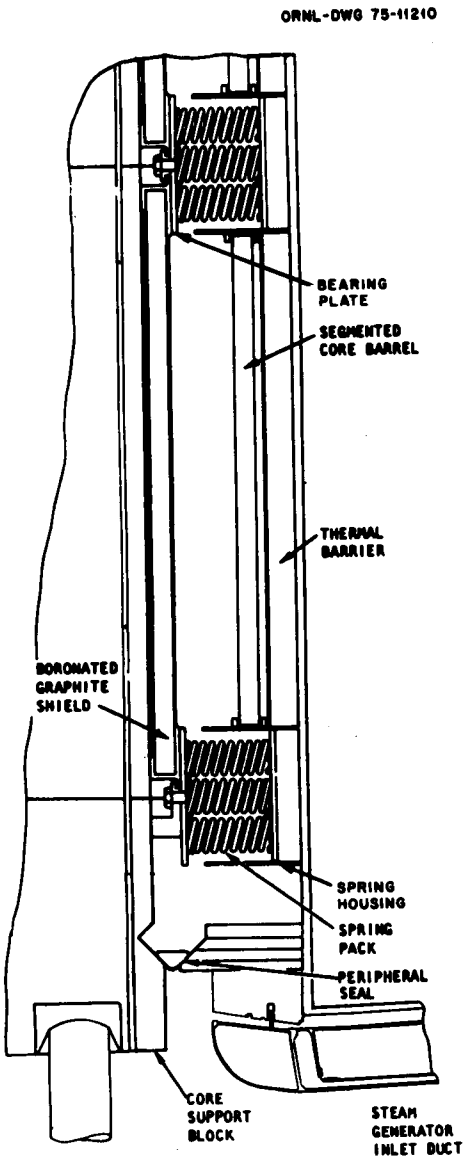

Fig. 4. Core Lateral Restraints Structure. Adapted from General Atomic Co. drawing taken from *General Atomic Standard Safety Analysis Report (GASSAR-6)*, GA-A-13200.

Materials Technology

The composition and required minimum properties of the materials of the core lateral restraint structure are given in Table 7. ASME Sect. III design stresses for the SA-285 Grade B steel used for the segmented core barrel and the SB-409 (Incoloy 800 Grade 1) used for the spring housings, bearing plates, and peripheral seal support structure are shown in Table 8. Note that the maximum ASME Code acceptance temperatures for nuclear application of SA-285 Grade B and SB-409 are 371 and 427°C (700 and 800°F), respectively, while design temperatures for their use are 377°C (710°F) (SA-285 Grade B) and up to 510°C (950°F) (SB-409). General Atomic implies[10]

[10] *General Atomic Standard Safety Analyiss Report (GASSAR-6)*, GA-A-13200.

Table 7. Properties of Materials for the Core Lateral Restraint Structure

Designation	Composition (wt %)	Minimum Room-Temperature Properties		
		Strength, ksi (MPa)		Total Elongation in 2 in. (%)
		0.2% Offset Yield	Ultimate Tensile	
ASTM A 637[a] Grade 718	0.08 C max 0.35 Mn max 0.35 Si max 0.015 S max 17.0–21.0 Cr 1.0 Co max 2.8–3.3 Mo 4.75–5.50 (Nb+Ta) 0.65–1.15 Ti 0.2–0.8 Al 0.006 B max 50–55 (Ni+Co) Bal. Fe	150.0 (1034)	185.0 (1276)	12[b]
ASTM SA-285 Grade B	0.22 C max 0.90 Mn max 0.035 P max 0.045 S max Bal. Fe	27.0 (186)	50.0 (345)	28
ASME SB-409 Annealed	30.0–35.0 Ni 19.0–23.0 Cr 1.5 Mn max 0.10 C max 0.75 Cu max 1.0 Si max 0.015 S max 0.15–0.60 Al 0.15–0.60 Ti	30.0 (207)	75.0 (517)	30

[a]An additional ASTM requirement for Alloy 718 is a rupture life of 23 hr and elongation of 5% under 100 ksi (689 MPa) at 649°C (1200°F).

[b]Elongation in 4 times specimen diameter.

Table 8. Design Stresses[a] for Core Lateral Restraint System Materials

Temperature		Design Stresses, ksi (MPa) for					
		SA-285, Grade B			SB-409		
(°C)	(°F)	S_y[b]	S_m[c]	S[d]	S_y[b]	S_m[c]	S[d]
38	100	27.0 (186)	16.7 (115)	12.5 (86)	30.0 (207)	16.7 (115)	18.7 (129)
93	200	24.6 (170)	16.4 (113)	12.5 (86)	27.6 (190)	16.7 (115)	17.5 (121)
149	300	23.9 (165)	16.0 (110)	12.5 (86)	26.0 (179)	16.7 (115)	16.7 (115)
204	400	23.2 (160)	15.4 (106)	12.5 (86)	25.0 (172)	15.8 (109)	16.1 (111)
260	500	21.9 (151)	14.5 (100)	12.5 (86)	24.1 (166)	14.9 (103)	15.6 (108)
316	600	20.0 (138)	14.0 (97)	12.5 (86)	23.9 (165)	14.6 (101)	15.2 (105)
343	650	19.6 (135)	13.3 (92)	12.5 (86)	23.7 (163)	14.4 (99)	15.1 (104)
371	700	19.5 (134)	13.1 (90)	12.5 (86)	23.5 (162)	14.3 (99)	14.9 (103)
399	750	18.8 (130)		12.5 (86)	23.3 (161)	14.2 (98)	14.7 (102)
427	800	17.9 (123)		12.5 (86)	23.0 (159)	14.0 (97)	14.5 (100)
454	850	17.4 (120)		12.5 (86)			
482	900	17.1 (118)		12.5 (86)			
510	950	16.5 (114)		12.5 (86)			
538	1000	15.0 (103)		12.1 (83)			

[a]From *ASME Boiler and Pressure Vessel Code*, "Sect. III-Division 1, Subsection NA," 1974 edition.

[b]Yield strength values.

[c]Design stress intensity values for Class 1 components.

[d]Allowable stress values for Class 2 and 3 components.

that all the metallic components of the core lateral restraint structure are designed to Class 1 equivalence and, therefore, design of all the SA-285 Grade B and SB-409 components — except for the spring housing [design temperature of 404°C (760°F)] — should follow the rules of *ASME Code Case* 1592. These materials are not currently covered in Code Case 1592.

Atomics International has recently obtained Sect. III approval for use of Inconel 718 (ASTM A 637 Grade 718) as a high-temperature bolting material for Class 1 nuclear vessel construction in accordance with the rules in Code Case 1592. Design stresses, taken from the Atomics International inquiry,[11] are shown in Table 9. Composition of the material qualified is as shown in Table 7 except that it also includes a limit of 0.30 wt % Cu; minimum properties are also identical to those in Table 7 and include additional specifications of minimum reduction of area (15%) and a minimum Brinell Hardness (331). The heat treatment for this age-hardenable Ni-Cr-Fe-Nb alloy is specified as: 927 to 982°C (1700–1850°F), 0.5 hr, air cool or faster plus 8 hr at 718°C (1325°F), furnace cool to 621°C (1150°F), hold until total aging time is 18 hr, air cool. Whether it

[11]Atomics International Submittal of Alloy 718 Bolting Material for Section III to the ASME Boiler and Pressure Vessel Code Committee, ASME File BC-74-424, Ref. 74AT5231, 1974.

Table 9. Maximum Allowable Stress Intensity for Inconel 718 Bolting

Temperature		Stress Intensity, S_0	
(°C)	(°F)	(ksi)	(MPa)
Room		37.0	255
38	100	37.0	255
93	200	35.3	243
149	300	34.4	237
204	400	33.7	232
260	500	33.3	230
316	600	33.0	228
371	700	32.7	225
427	800	32.4	223
454	850	32.2	222
482	900	32.0	221
510	950	31.7	219
538	1000	31.4	216
566	1050	31.0	214
593	1100	30.5	210
621	1150	29.9	206
649	1200	28.8	199

will be permissible to use these bolting specifications and rules in conjunction with the design of the Inconel 718 core lateral restraint structure springs [504°C (940°F) design temperature] is speculation.

Potential Areas of Concern

The design temperatures for normal operation of the core lateral restraint structure are sufficiently low to preclude major concerns relative to gas-metal reactions (i.e., reaction of impurities in the primary coolant helium with the structural materials), degradation of properties resulting from such reactions, and significant thermal stability problems. Also, as indicated earlier, radiation damage to materials should be minimal. The SA-285 Grade B steel in the segmented core barrel may decarburize slightly and, consequently, lose strength to some extent over the plant lifetime, but, since the segmented core barrel is not a load-bearing part of the structure, this should cause no problem. The service temperatures [below 538°C (1000°F)] for the components constructed of SB-409 (Incoloy 800 Grade 1) and A 637 (Inconel 718) are below the temperature range where environmental (gas-metal reaction) effects have been observed for iron-nickel and nickel-base alloys. Additional consideration should be given to possible changes in the properties of these two materials after long-term exposures as well as to the extent of relaxation of the Inconel 718 coil springs. Finally, as with the components

discussed previously,[12] it would be desirable to determine *damage* and *failure* limits for the core lateral restraint structure.

BORONATED GRAPHITE CONTROL COMPONENTS

Boronated graphite (graphite impregnated with boron carbide) is used in a number of reactivity control and shielding applications in the HTGR. These include the control rods, burnable poison rods, boronated shield, reserve shutdown system, and the upper-plenum elements. We have analyzed the components containing boronated graphite for possible materials-related safety deficiencies. Our evaluations included consideration of (1) degradation of the boronated graphite by reaction with impurities in the primary coolant stream; (2) effects of radiation on the oxidation resistance and integrity of boronated graphite, including the effects of swelling on boronated graphite integrity and on the function of the control rods; (3) response of control rod structural material to radiation and the boron plus carbon environment, and (4) possible environmental damage to the control rod shock absorbers. The effects of radiation and of contamination, particularly boron and carbon contamination, on the ductility and strength of the Incoloy 800 sheathing of the control rods and boronated shields were especially considered.

Control Rods[13]

Each of the 73 pairs of control rods of the large HTGR consists of 15 absorber containers held together by a continuous control spine (see Fig. 5), which allows flexing of the containers relative to each other. A tubular crushable shock absorber is fitted to the lower end of the control rod, while the upper end has a coupling that links to the control-rod drive cable. Each absorber container consists of two concentric sleeves, 3.5 in. OD by 0.05 in. wall (89 × 1.3 mm) and 2 in. OD by 0.05 in. wall (51 × 1.3 mm). The boronated graphite neutron absorber compacts, containing about 0.66 g/cm^3 B, are fabricated into tubes 3.28 in. OD by 2.05 in. ID by 16.08 in. long (83.3 by 52.1 by 408.4 mm) and are sealed into the space between the concentric sleeves by annular metal caps welded to the sleeves. This arrangement leaves the center of the rod open for cooling flow. Each of the containers is vented through four small holes in its annular cap. Expansion volume is provided in the containers to accommodate growth of the absorber material. All metallic parts of the control rods — sleeves, shock absorbers, spines, and other fixtures — are fabricated from Incoloy Alloy 800H, ASME SB-409 (tube) or ASME SB-408 (rod).

---

[12]P. L. Rittenhouse, *Initial Assessment of the Status of HTGR Metallic Structural Material Technology*, ORNL-TM-4760 (December 1974).

[13]Based on *General Atomic Standard Safety Analysis Report (GASSAR-6)* GA-A-13200.

ORNL-DWG 75-11211

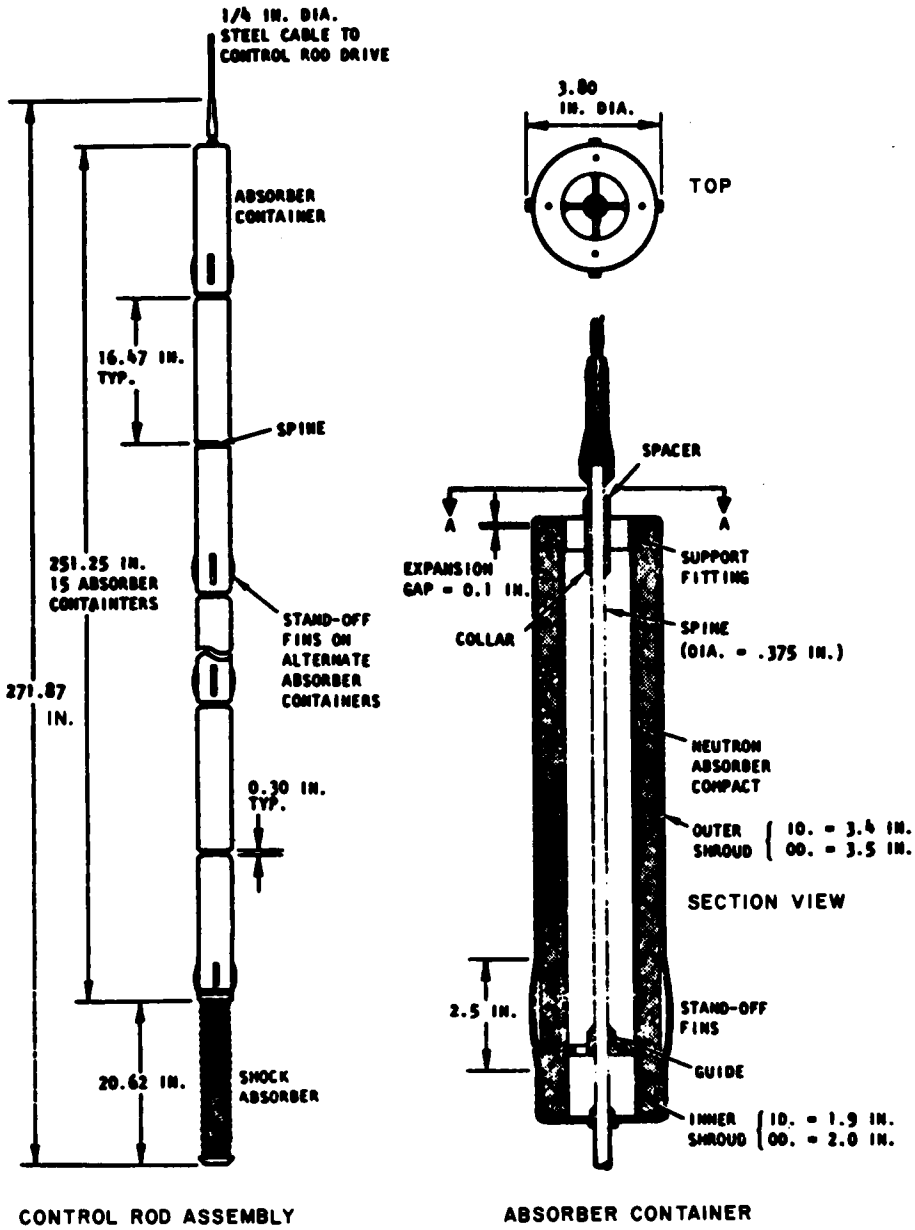

Fig. 5. Control Rod Assembly and Absorber. To convert dimensions to millimeters, multiply by 25.4. Adapted from General Atomic Co. drawing taken from *General Atomic Standard Safety Analysis Report (GASSAR-6)*, GA-A-13200.

Burnable Poison Rods[13]

In each corner of the fuel elements in the HTGR is a hole (see Fig. 6), which may contain, depending on the location of the element in the core, a burnable poison rod. These rods, running the length of the fuel rod stack, consist of boron carbide granules dispersed in a graphite matrix.

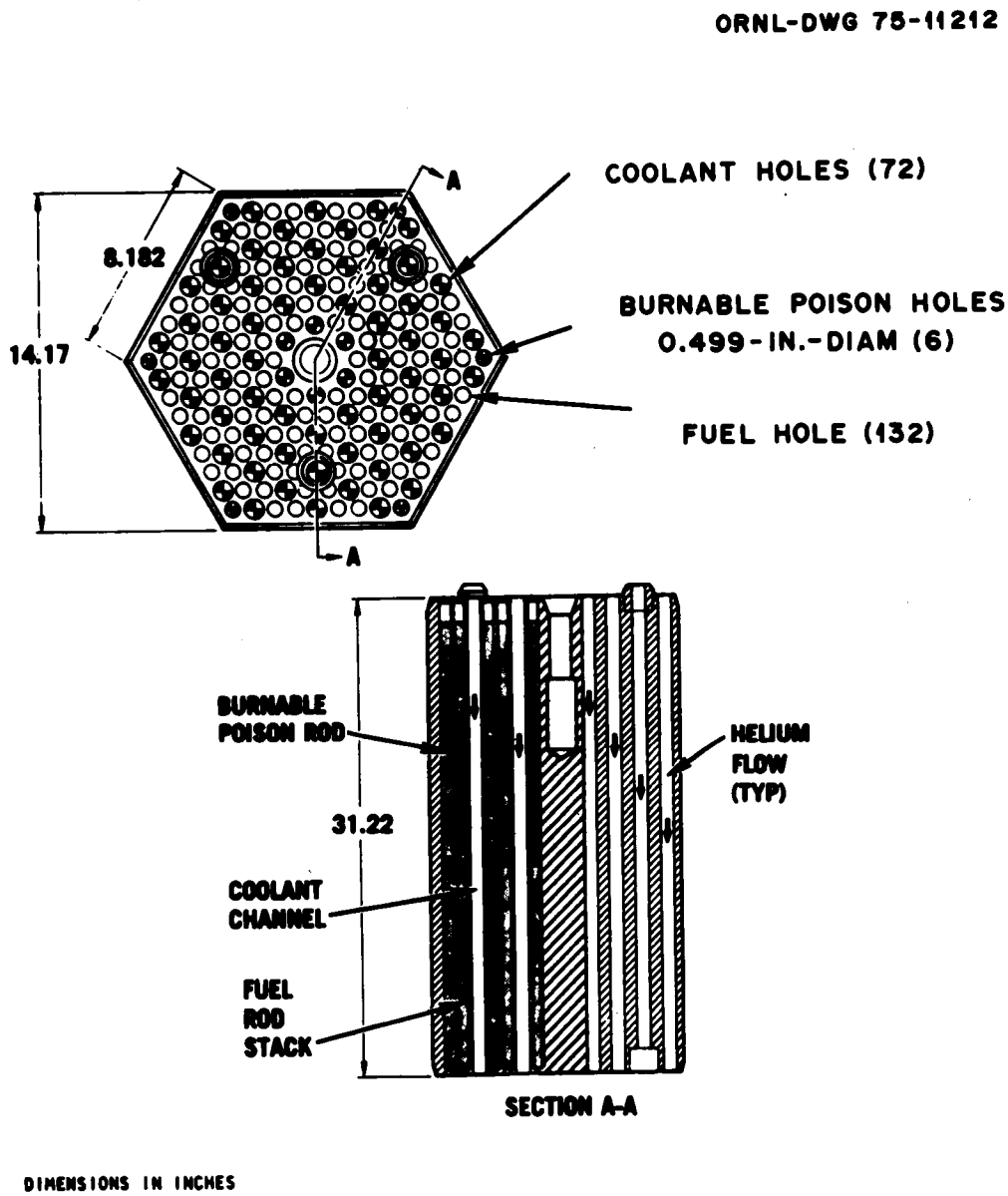

Fig. 6. Location of Burnable Poison Rods in HTGR Fuel Elements. To convert dimensions of millimeters, multiply by 25.4. Adpated from General Atomic Co. drawing taken from *General Atomic Standard Safety Analysis Report (GASSAR-6)*, GA-A-13200.

Boronated Shield[13]

The boronated shield is a metal-clad boronated graphite thermal neutron absorbing assembly provided to shield the PCRV and liner from excessive radiation. It consists of 216 blocks [3–4 in. (80–100 mm) thick] located immediately surrounding the permanent side reflectors and supported from the core lateral restraint structure (see Fig. 4, p. 14). The blocks, fabricated from a flour composed of 0.004 to 0.032-in.-diam (0.10–0.81-mm) particles of B_4C and <0.06-in.-diam (1.5-mm) graphite particles, are loosely held in an Incoloy 800 (presumably Alloy 800H) box. This box is vented to accommodate system pressure variations. The box also absorbs and supports loads from external sources that might damage the boronated graphite blocks.

The shield assembly will receive a maximum effective fast neutron fluence of about 6.8×10^{18} n/cm^2 on its inside surface over the life of the plant. This fluence is attenuated to approximately 2.2×10^{18} n/cm^2 on the outer surface. These radiation levels should have a negligible effect on the properties of the Incoloy 800 cladding material. Design temperatures, at rated power, for the boronated shield blocks and cladding (inside/outside) are 668/663°C (1235/1207°F) and 621/566°C (1150/1050°F), respectively; emergency and faulted conditions raise these to 693/688°C (1280/1270°F) and 704/677°C (1300/1250°F), respectively.

Reserve Shutdown System[13]

A reserve shutdown system using 9/16-in.-diam (14-mm) boronated graphite pellets (40 wt % B_4C in graphite) is provided for backup shutdown capability. The pellets are contained in hoppers located in the refueling penetrations and can be released into a channel in the center column of each fuel region (see Fig. 2, p. 11).

Upper Plenum Elements[13]

The boronated graphite contained in the upper plenum elements (see Fig. 1, p. 10) provides neutron shielding and thus forms a top reflector surface over the active core. As indicated earlier, the plenum elements are fabricated of type 316 stainless steel. Additional vented elements, containing boronated graphite but having no holes for coolant passage, cover the removable side reflector columns and form the remainder of the top reflector surface. These elements are fabricated of 2 1/4 Cr-1 Mo steel.[12]

Effects of Environment on Boronated Graphite

Oxidation

The B_4C and graphite constituting the boronated graphite compacts used in the various control components discussed above will oxidize in the presence of some of the impurities contained in the primary coolant helium. The reactants of interest here are O_2, CO_2, CO, and H_2O. Oxygen will likely be present at a partial pressure below 10^{-25} atm (10^{-20} Pa) under the best expected operating conditions and below 10^{-22} atm (10^{-17} Pa) under worst case operating conditions.[14] From the work of Woodley[15] one would not expect such low partial pressures to result in a significant boron transport rate. However, the CO_2, CO, and H_2O concentrations under proposed worst case operating conditions are 2×10^{-6}, 4.5×10^{-4}, and 5×10^{-5} atm (0.2, 45, and 5 Pa), respectively. The effect of such levels of CO_2 and CO on the stability of boronated graphite are not known and should be determined. On the other hand, Litz and Mercuri[16] have shown that water vapor will oxidize boronated graphite to form B_2O_3 and volatile boric acid (HBO_2) as shown below:

$$B_4C + 6H_2O \rightarrow 2B_2O_3 + C + 6H_2 \ ,$$

$$B_2O_3 + H_2O \rightarrow 2HBO_2 \text{ (or possibly } H_3BO_3) \ .$$

Assuming, as a first approximation, that the reaction rate reported by Litz and Mercuri for powdered B_4C depends linearly on pressure, a water vapor partial pressure of 5×10^{-5} atm (5 Pa) at a temperature of 677°C (1250°F) would result in a reaction rate of 8.3×10^{-6}/hr. This rate is sufficiently high to indicate that the transport of boron from vented control rods is potentially a safety and operating concern.

Several factors might act to decrease this rate. These include:

1. The partial pressure of H_2O in the helium in control rod channels may be locally lower since it is supplied directly from the coolant cleanup system.
2. Helium overpressure may suppress the rate at which HBO_2 volatilizes.
3. Volatile boric acid may not be stable at all reactor operating temperatures.
4. The vents will restrict the helium flow rate.

---

[14] F. N. Mazandarany, General Atomic Company, private communications, 1975.

[15] R. E. Woodley, "The Oxidation of Boronated Graphite," *Carbon* 6: 617–26 (1968).

[16] L. M. Litz and R. A. Mercuri, "Oxidation of Boron Carbide by Air, Water, and Air-Water Mixtures at Elevated Temperatures," *J. Electrochem. Soc.* 110(8): 921–25 (1963).

5. A counterflow of helium in the vent region will be produced by generation of helium within the control rod.

6. The graphite matrix dilutes the B_4C.

7. The B_4C surface area is minimized because of the monolithic form of boronated graphite and the shrouding effect of the cladding.

8. The reaction rate could decrease with time as a result of surface passivation.

Conversely, the following factors might be expected to accelerate this rate:

1. irradiation environment,
2. pressure changes induced by temperature changes in the control rods.

Because of the uncertainty in the magnitude of the summed effects listed above, an in-depth analytical study of these points is recommended to determine if boron could be transported from the control and if so, at what rate.

Irradiation

High neutron irradiation doses cause expansion of graphite and even greater expansions in boronated graphite.[17] The greater expansion in boronated graphite is thought to result from damage caused by the high-energy particles of the $^{10}B(n,\alpha)^{7}Li$ reaction. However, dimensional changes in black boronated graphite have been found[18] to be less than 1% in a thermal neutron fluence up to 2.5×10^{21} n/cm^2. Boronated graphite taken from a Fort St. Vrain type control rod absorber had expanded 2% in the direction parallel to hot-pressing after a fluence of 5×10^{21} n/cm^2. Expansion perpendicular to the hot-pressing direction was about 1%. The radiation-induced expansion of the boronated graphite is accompanied by an increase in compressive strength, but it is not known if this expansion might increase the accessibility of the B_4C to gaseous impurities.

The thermal conductivity of boronated graphite decreases under irradiation.[19] For various boronated graphites, this decrease was a factor of 9 to 13 at a fluence of 2.5×10^{21} n/cm^2. The effects, if any, of this degradation of thermal conductivity on control component functioning cannot be stated at present. No further experimental work on the effects of radiation on boronated graphite conductivity appears to be required, but control materials (i.e., control rods) removed from Peach Bottom and Fort St. Vrain reactors should be examined and evaluated with possible effects of thermal conductivity changes in mind.

---

[17] O. M. Stansfield, *Irradiation-Induced Dimensional Change in HTGR Control Materials*, GA-A-12035 (April 28, 1972).

[18] J. M. Davidson, L. O. Gates, and R. E. Nightingale, "Radiation Damage Effects in Boronated Graphite," *Nucl. Sci. Eng.* 26: 90–8 (1966).

[19] G. B. Engle and W. P. Eatherly, "Irradiation Behavior of Graphite at High Temperature," *High Temp.-High Pres.* 4: 119–58 (1972).

Potential Problem Areas

Control Material Containers

A potential process for disruption of in-core control material configuration is failure of the containers of these components (i.e., the Incoloy 800 control-rod cans and boronated shield cladding and the type 316 stainless steel and 2 1/4 Cr-1 Mo steel plenum elements). This could conceivably occur through embrittlement of the control component containers by carbon and boron followed by mechanical failure. It is well-established that boron affects the properties of steels and that small quantities can reduce the ductility.[20–22] High-temperature gas-cooled reactor operating temperatures and operating times are sufficient to justify an assumption that boron and carbon will contaminate the boronated graphite containers. The continuous neutron flux would be expected to accelerate diffusion of boron and carbon and therefore the embrittlement. Oxidizing impurities in the helium would also tend to accelerate embrittlement by providing gaseous or liquid (B_2O_3) transport of carbon and boron to the cladding. At high concentrations of these elements, their effect on properties is not known.

Loss of ductility in Incoloy 800 might in several ways lead to failure of control rods. In case of control rod drop, increased brittleness might prevent satisfactory operation of the Incoloy 800 shock absorbers and cause the control rods to shatter. If seismic events, overheating, or other causes slightly misaligned the reactor structure or the control rods, embrittled control rods might fracture during an attempt to insert them. Additionally, during normal reactor operation the absorber containers must be sufficiently strong and ductile to withstand possible vibration or flutter resulting from primary coolant flow. Few, if any, failure scenarios exist for embrittled plenum element and boronated shield control material containers. These assemblies are not structural members and contain no moving parts. Substantial vibrations or impact loads, resulting from significant malfunctions or unusual events, would be required to cause failure.

Only limited information is available on the effects of boron and carbon on the properties of the container materials of interest. Of first importance here are such effects on the Incoloy 800 control rod parts.

---

[20] S. Kawasaki, A. Hishinuma, and R. Nagasaki, "Behavior of Boron in Stainless Steel Detected by Fission Track Etching Method and Effect of Radiation on Tensile Properties," *J. Nucl. Mater.* 39: 166–74 (1971).

[21] A. K. Chakraborty, C.K.H. DuBose, and W. R. Martin, *Effect of Boron on the Ductility and Strength of Inconel 600 and Types 304 and 316 Stainless Steel at Hot Metalworking Temperatures,* ORNL-TM-3316 (May 1971).

[22] D. R. Harries et al., "Role of Boron in the High-Temperature Irradiation Embrittlement of Austenitic Steel," pp. 357–81 in *Radiation Damage in Reactor Materials, Vol. II,* International Atomic Energy Agency, Vienna, 1969.

This should be investigated following two paths. First, out-of-reactor tests in which Incoloy 800 is exposed to boron and carbon environments would provide data on the effects of these elements on strength and ductility. A model based on these data and radiation effects information could then be developed to improve estimates of how long Incoloy-800-sheathed control rods could be safety left in the reactor. Second, the examination of irradiated control rods from the Peach Bottom reactor should continue with particular emphasis on the ductility of Incoloy 800. When available, the Fort St. Vrain reactor control rods should periodically be thoroughly examined.

Reserve Shutdown System

The boronated graphite pellets used as the control material in the reserve shutdown system are stored in hoppers in the refueling penetrations above the reactor core. Each hopper is connected by a channel to a reserve shutdown hole in the fuel assembly. During normal reactor operation the temperature in the hoppers is between 204 and 427°C (400 and 800°F).

A safety question inherent to this system is whether the pellets can sinter together and, thereby, hinder or prevent the control material from being released from the hopper into the reserve shutdown channel in the fuel assembly. Neck growth between the boronated graphite pellets could be enhanced and accelerated by the presence of slightly volatile boron oxides. It is desirable, then, to evaluate the bonding or sintering of these pellets both under normal storage conditions and under conditions where moisture availability is increased and/or the temperature is raised. Any degree of bonding observed in such tests should be evaluated in terms of its effect on release of the pellets from the hopper to the reserve shutdown hole.

ASSESSMENT EFFORTS DURING FY 1976

This section describes the materials assessment efforts that will be carried out during FY 1976 to further assist the conduct of safety-related analyses of the integrity and performance of components under normal and accident conditions.

Progress on Previously Identified Information Needs

We concluded our previously report[23] with a section on Information Needs and Priorities. The subject section summarized briefly, by component and material, safety-related information needs and cross referenced these — where possible — to ongoing programs. Additionally, arbitrary priorities — based on the importance of the component, the potential

---

[23]P. L. Rittenhouse, *Initial Assessment of the Status of HTGR Metallic Structural Material Technology*, ORNL-TM-4760 (December 1974).

consequences of its failure, the degree of deficiency of knowledge on relevant behavior of its structural materials, and the extent of coverage in existing programs — were assigned to these needs. We plan, early in the fiscal year, to reassess those needs and priorities in terms of any new information and/or data now available and programs and studies recently initiated. Particular attention will be given to those items that were identified as "important, not addressed in existing programs" (the highest priority).

Impact of HTGR Materials Data Needs on Safety Analyses

General Atomic Company has recently completed a summary report on the types of materials (metallic and nonmetallic) data needed to form a complete basis for the design and prediction of performance of primary system (noncore) components of the steam-raising HTGR.[24] That report was prepared for ERDA under Contract AT (04-3)-167, Project Agreement 50. The major materials used in current and possible near-term designs were identified along with all materials properties data that are considered in design processes. Materials and materials property data listings were cross-checked to identify any areas where existing data are incomplete. Where this was found to be the case, programs required to satisfy these deficiencies were outlined and assigned priorities. The highest priority was given in those areas where data are needed to support current component design; a slightly lower priority was assigned to data needed for verification of property and behavior assumptions made in design. These latter data will be required by the time of final acceptance of the FSAR for the first large plant (assumed as the end of 1979). By careful evaluation of the subject General Atomic Company document, in conjunction with and in light of our past and current materials and components assessments, we hope to show where and how these identified data needs may impact current and future safety analysis needs and concerns.

Core Support Ceramics

The fuel zones of the HTGR are supported with graphite reflector and outlet orifice blocks that mix the gas exiting from each fuel column into a single jet from each fuel region. Below these blocks are the graphite core support posts. A series of ceramic insulators will be used to separate the core posts from the PCRV floor and, thereby, reduce the heat load to the liner in the bottom of the PCRV. These insulators, in addition to limiting heat flow, are integral load-bearing members of the core support post structure. Compressive loads on the posts will range from 30,000 to 47,000 lb (0.13—0.21 MN). The ceramic compacts employed in some

---

[24] O. F. Kimball and D. I. Roberts, *Survey of Materials Data for HTGR*, GA-A-13354 (April 30, 1975).

designs are (from post to floor) hot-pressed silicon nitride, 95% (min) alumina, and silica. Nominal operating temperatures for the three are 816, 735, and 529°C (1500, 1355, and 985°F), respectively, but for significant fractions of their service life (≈25%) they will experience temperatures above 902, 810, and 574°C (1655, 1490, and 1065°F). Maximum short-term (about 1-hr) temperatures are estimated as 1454, 1296, and 852°C (2650, 2365, and 1565°F), respectively.

During FY 1976 we will initiate and complete an assessment and review of the mechanical and physical properties of the core post insulator ceramics and the implications of these to the integrity and performance of the core support structure. We will emphasize compressive creep behavior, possible interactions (e.g., carburization and vaporization) with the helium coolant environment, and compatibility among themselves over the plant design lifetime.

Thermal Barrier Insulating Materials

The thermal barrier systems used in the HTGR are designed to limit heat losses from the primary coolant and to protect the PCRV and liner from excessive temperatures. Except for the region immediately below the core support structure, the thermal barrier design employed consists of a fibrous ceramic blanket (alumina-silica) backed by metallic cover plates. The floor of the PCRV (i.e., beneath the fuel and core support regions) is protected by fused silica blocks.

All the metallic materials used in thermal barrier designs were discussed previously.[23] This year, efforts will be directed toward evaluation of the thermal barrier insulating ceramics — especially the fused silica flooring — and assessment of possible materials-related safety implications.

ACKNOWLEDGMENT

The authors appreciate the assistance in the preparation of the report by R. G. Donnelly, the editing by Sigfred Peterson, and the typing and preparation of the report for reproduction by Stephanie Davison.

ORNL/TM-5136
(UC-77 Gas-Cooled
Reactor Technology)

INTERNAL DISTRIBUTION

1–3. Central Research Library
4. Document Reference Section
5–14. Laboratory Records Department
15. Laboratory Records, ORNL RC
16. ORNL Patent Office
17. J. L. Anderson
18. S. J. Ball
19. R. L. Beatty
20. L. L. Bennet
21. E. S. Bomar
22. C. R. Brinkman
23. J. P. Callahan
24. D. A. Canonico
25. A. J. Caputo
26. T. E. Cole
27. J. A. Conlin
28. J. H. Coobs
29. D. Costanzo
30. J. E. Cunningham
31. J. A. Cox
32. W. R. Corwin
33. J. H. DeVan
34–36. J. R. DiStefano
37–39. R. G. Donnelly
40. F. F. Dyer
41. W. P. Eatherly
42. J. I. Federer
43. G. G. Fee
44. D. E. Ferguson
45. J. C. Griess
46–48. M. R. Hill
49. F. J. Homan
50–87. P. R. Kasten
88. R. J. Kedl
89. H. T. Kerr
90. T. B. Lindemer
91. E. L. Long, Jr.
92. A. L. Lotts
93. A. P. Malinauskas
94. W. J. Martin
95. W. R. Martin
96. B. H. Montgomery
97–101. C. S. Morgan
102. M. T. Morgan
103. R. K. Nanstad
104. K. J. Notz
105. L. C. Oakes
106. A. R. Olsen
107. M. F. Osborne
108. R. L. Pearson
109. P. L. Rittenhouse
110. J M Robbins
111. G. C. Robinson
112. P. Rubel
113. J. P. Sanders
114. R. L. Shepard
115. R. S. Stone
116. J. R. Tallackson
117. V. J. Tennery
118. K. R. Thomas
119. M. Tobias
120. D. B. Trauger
121. T. N. Washburn
122. J. R. Weir
123. J. C. White
124. G. D. Whitman
125. R. P. Wichner
126. R. G. Wymer
127. W. C. Leslie (consultant)
128. John Moteff (consultant)
129. Hayne Palmour III (consultant)
130. J. W. Prados (consultant)
131. G. V. Smith (consultant)
132. D. F. Stein (consultnat)

EXTERNAL DISTRIBUTION

133–134. USERDA DIVISION OF NUCLEAR FUEL CYCLE AND PRODUCTION, Washington, DC 20545

Director

135–136. USERDA DIVISION OF REACTOR RESEARCH AND DEVELOPMENT, Washington, DC 20545

Director

137–138. USERDA OAK RIDGE OPERATIONS OFFICE, P.O. Box E, Oak Ridge, TN 37830

Director, Reactor Division
Research and Technical Support Division

139–300. USERDA TECHNICAL INFORMATION CENTER, Office of Information Services, P.O. Box 62, Oak Ridge, TN 37830

For distribution as shown in TID-4500 Distribution Category, UC-77, Gas-Cooled Reactor Technology