OAK RIDGE NATIONAL LABORATORY LIBRARIES
3 4456 0555857 1

CENTRAL RESEARCH LIBRARY

ORNL/TM-5553

Cy 78

The Use of a Modified Beam in Obtaining Creep Data in Uniaxial Tension and Compression

D. N. Robinson
R. L. Battiste
M. Richardson

[redacted]

OAK RIDGE NATIONAL LABORATORY
CENTRAL RESEARCH LIBRARY
DOCUMENT COLLECTION
LIBRARY LOAN COPY
DO NOT TRANSFER TO ANOTHER PERSON
If you wish someone else to see this document, send in name with document and the library will arrange a loan.
UCN-7969
(3 3-67)

OAK RIDGE NATIONAL LABORATORY
OPERATED BY UNION CARBIDE CORPORATION FOR THE ENERGY RESEARCH AND DEVELOPMENT ADMINISTRATION

Printed in the United States of America. Available from
the Energy Research and Development Administration,
Technical Information Center
P.O. Box 62, Oak Ridge, Tennessee 37830
Price: Printed Copy $3.50 ; Microfiche $2.25

This report was prepared as an account of work sponsored by the United States Government. Neither the United States nor the Energy Research and Development Administration/United States Nuclear Regulatory Commission, nor any of their employees, nor any of their contractors, subcontractors, or their employees, makes any warranty, express or implied, or assumes any legal liability or responsibility for the accuracy, completeness or usefulness of any information, apparatus, product or process disclosed, or represents that its use would not infringe privately owned rights.

ORNL/TM-5553
Dist. Category UC-79, -79e, -79h, -79k

Contract No. W-7405-eng-26

Reactor Division

THE USE OF A MODIFIED BEAM IN OBTAINING CREEP DATA IN UNIAXIAL TENSION AND COMPRESSION

D. N. Robinson
R. L. Battiste
M. Richardson

AUGUST 1976

NOTICE: This document contains information of a preliminary nature and was prepared primarily for internal use at the Oak Ridge National Laboratory. It is subject to revision or correction and therefore does not represent a final report.

OAK RIDGE NATIONAL LABORATORY
Oak Ridge, Tennessee 37830
operated by
UNION CARBIDE CORPORATION
for the
ENERGY RESEARCH AND DEVELOPMENT ADMINISTRATION

OAK RIDGE NATIONAL LABORATORY LIBRARIES

3 4456 0555857 1

CONTENTS

	Page
ABSTRACT	1
INTRODUCTION	1
ANALYSIS OF THE "SLOTTED" BEAM	7
THE EXPERIMENT	11
CONCLUSIONS	13
ACKNOWLEDGMENTS	14

THE USE OF A MODIFIED BEAM IN OBTAINING CREEP DATA IN UNIAXIAL TENSION AND COMPRESSION*

D. N. Robinson R. L. Battiste
M. Richardson

ABSTRACT

A method of testing is presented which makes use of a special "slotted" beam to compare the tensile and compressive creep response of a metal at high temperature. The technique avoids most of the difficult alignment problems associated with conventional uniaxial testing in compression. Application of the method is made to 2 1/4 Cr—1 Mo steel, a primary reactor system metal. It is concluded that the elastic-creep behavior of this alloy is effectively the same in compression as in tension. Moreover, the "slotted" beam is judged a practicable tool for obtaining reliable creep data in tension and compression.

Keywords: Creep, experiment, cyclic, compression, beam, metals, high-temperature design, inelasticity, 2 1/4 Cr—1 Mo steel.

INTRODUCTION

Creep testing in uniaxial compression is known to present far greater technical difficulties than testing in tension. The effects of load eccentricity and initial imperfections, for example, have an enormous influence in a compression test; furthermore, such effects tend to magnify as the test proceeds. These difficulties, compounded with those normally associated with high-temperature materials testing, make it understandable why very little reliable information is available on the high temperature creep of metals in compression.

---

*Work done at Oak Ridge National Laboratory, operated by Union Carbide Corporation for the Energy Research and Development Administration.

The present work concerns a method of obtaining compressive creep data in which the sensitive alignment problems inherent in conventional uniaxial testing in compression are, for the most part, circumvented. Moreover, both compressive and tensile data are generated simultaneously using the present technique, thus allowing a direct comparison of tensile and compressive creep response from a single specimen.

The method involves the use of a beam made of the subject material (in this case 2 1/4 Cr—1 Mo steel) which is loaded transversly in "four-point" bending (Figs. 1 and 2). A "slot" is cut into the central, pure-moment portion of the beam leaving two thin "flanges" which, as the beam is loaded, are subjected to "nearly" homogeneous stress, one flange in tension and the other in compression. Reversing the load on the beam (Fig. 2) reverses the stress in each flange and thus allows for cyclic testing.

In the test described here, a beam of annealed 2 1/4 Cr—1 Mo steel* was tested at 564°C (1047°F) under a load producing an average stress in each flange of approximately ±69 MPa (10 ksi). The complete load history is given in Fig. 3. The extensional and contractional strain at the outermost fibers of each flange was measured using Boeing-type capacitive strain gages and associated electronics. The beam was enclosed in a resistance-heated furnace and instrumented with thermocouples to accurately record and control the temperature.

The strain-time records indicating the response of each flange are shown in Fig. 4 and are seen to be almost mirror images of each other. It is concluded that, well within the bounds of uncertainty normally attributed to creep testing at high temperatures, the elastic-creep response of this particular heat of 2 1/4 Cr—1 Mo steel may be considered identical in tension and compression. It is further concluded that the simple test method described here is feasible and provides a good alternative to conventional testing in compression.

---

*The beam was manufactured from a 25-mm (1-in.) plate of annealed 2 1/4 Cr—1 Mo steel (heat 3P5601).

ORNL–DWG 76–11201

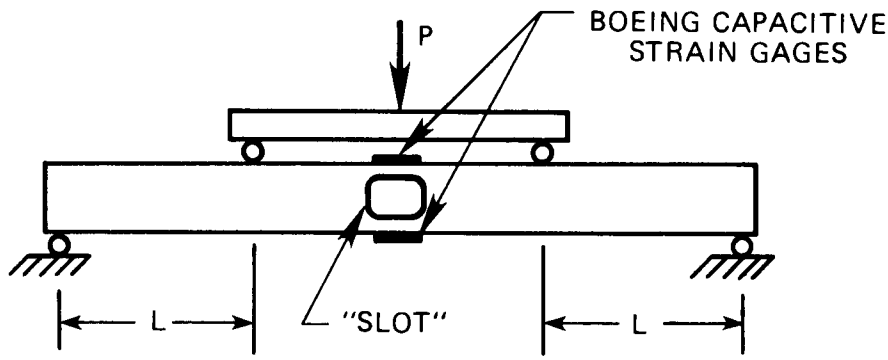

(*a*)

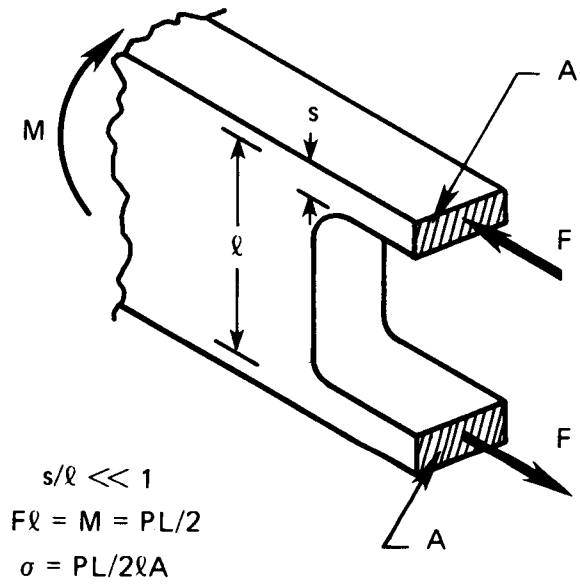

(*b*)

Fig. 1. Schematic diagram of "slotted" beam in four-point bending and free-body sketch of pure-moment section of beam.

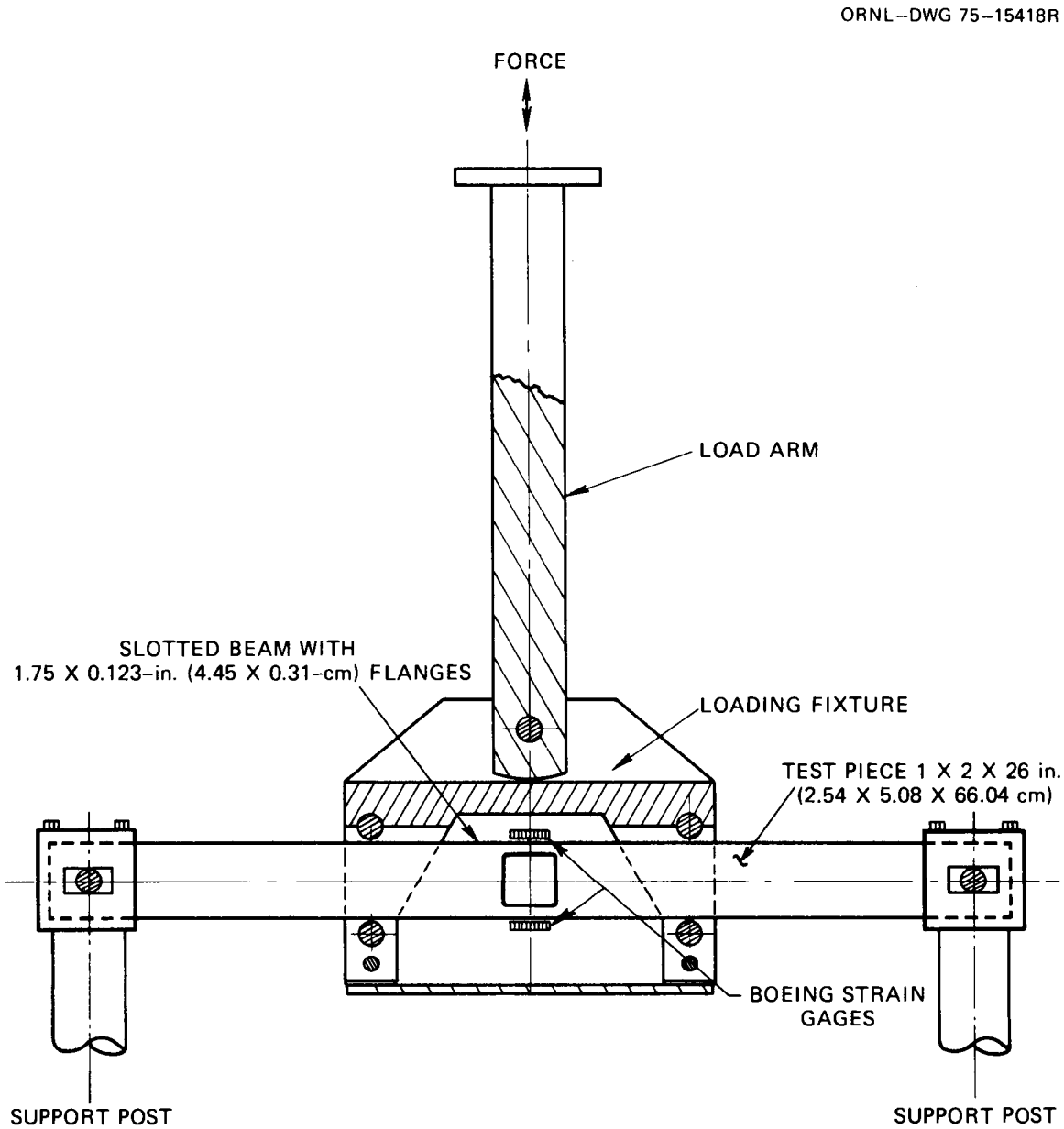

Fig. 2. Loading fixture for "slotted" beam test.

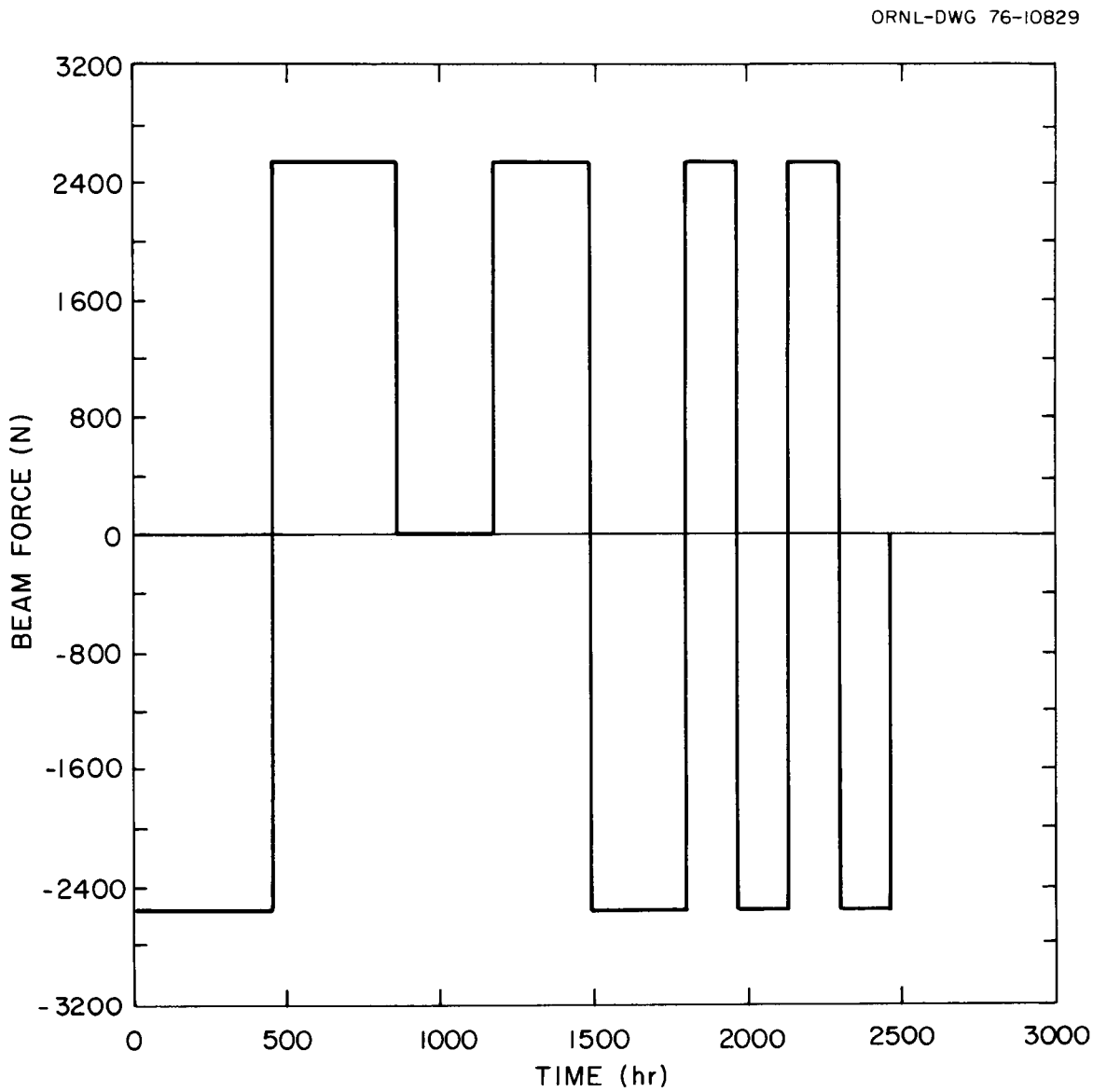

Fig. 3. Loading history for 2 1/4 Cr—1 Mo steel beam test.

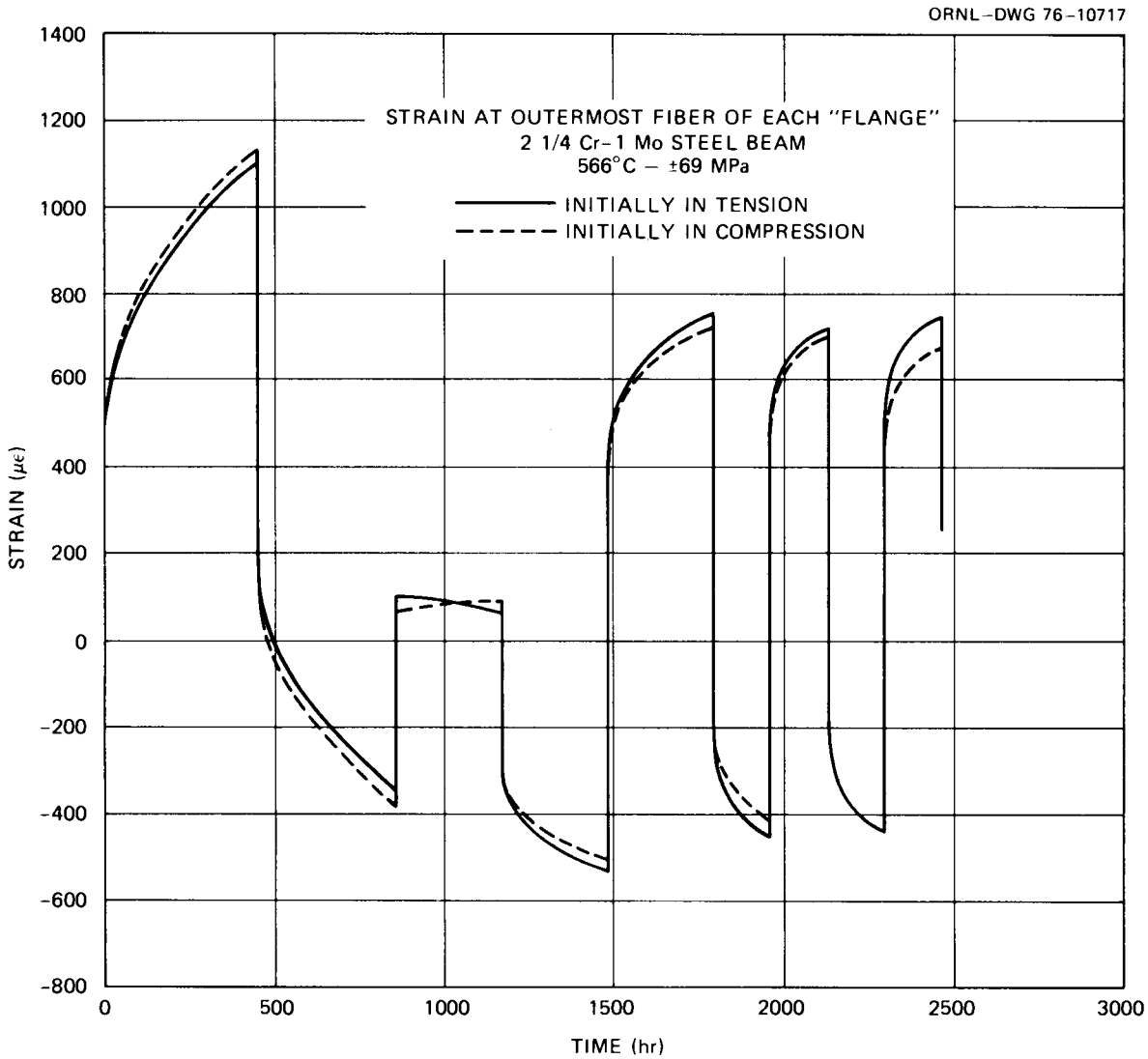

Fig. 4. Elastic-creep response of each beam "flange."

ANALYSIS OF THE "SLOTTED" BEAM

The central portion of the "slotted" beam is in a state of pure bending as illustrated in Fig. 1. Since the beam material is assumed homogeneous and the temperature distribution uniform, the beam may be said to be symmetrical, *with respect to both geometry and material properties*, about the plane of bending (plane P_1 in Fig. 5*a*). This *symmetry* combined with the fact that the beam is *uniform* along the central "gage length"* dictates that plane cross sections (in the gage length) remain plane as bending occurs, that is to say, the distribution of axial strain across each flange thickness is *linear* (Figs. 5*b* or 5*c*). This, of course, is purely a kinematical constraint and is independent of material behavior.

The strain distribution across each flange becomes more nearly uniform as the ratio of flange thickness to depth, i.e., s/ℓ (Fig. 1), is made small.** In the present experiment $s/\ell \sim .065$, giving a calculated variation of strain across each flange of about 12%. This can easily be reduced by making s/ℓ smaller. However, if the purpose of the experiment is solely to compare tensile and compressive behavior, as is the case here, this variation is of no consequence.

The elastic† stress distribution upon initial load-up is, in theory, also linear with a 12% variation across each flange. The stress redistributes itself, however, as creep occurs and tends in time to a more uniform distribution as illustrated in Fig. 6. Thus, throughout most of the present test, the stress distribution is nonlinear and varies considerably less than 12%.

The net axial force in the beam is zero†† (Fig. 1*b*), so that the resultant force in the compression flange is equal and opposite

---

*In the present experiment the length of each flange is about 4.5 cm (1.75 in.). The gage length is taken as the central inch over which the Boeing strain gage is mounted.

**For a given length of "slot," the flange thickness s must, of course, be selected so as to avoid buckling in the compression flange.

†The "yield" stress of 2 1/4 Cr–1 Mo steel at 564°C (1047°F) was not exceeded in the present test.

††As shown schematically in Fig. 2 the beam is pinned at its ends; the pins, however, are essentially unconstrained axially so that no significant axial forces can develop.

ORNL--DWG 76-11202

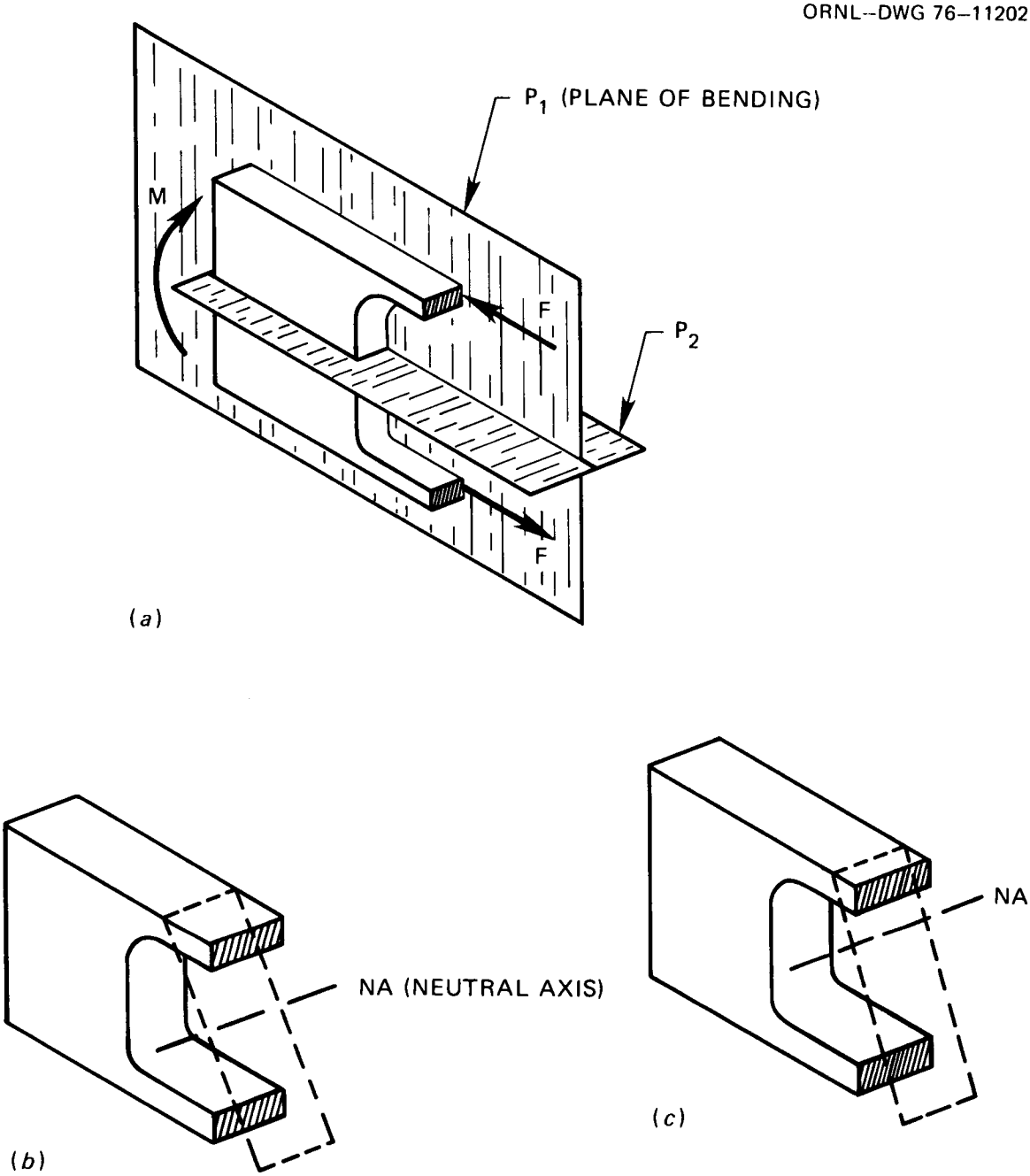

Fig. 5. Elements of pure-moment section of beam showing (a) planes of symmetry, (b) antisymmetric strain distribution (about P_2), (c) non-antisymmetric strain distribution depicting material "stronger" in compression than tension.

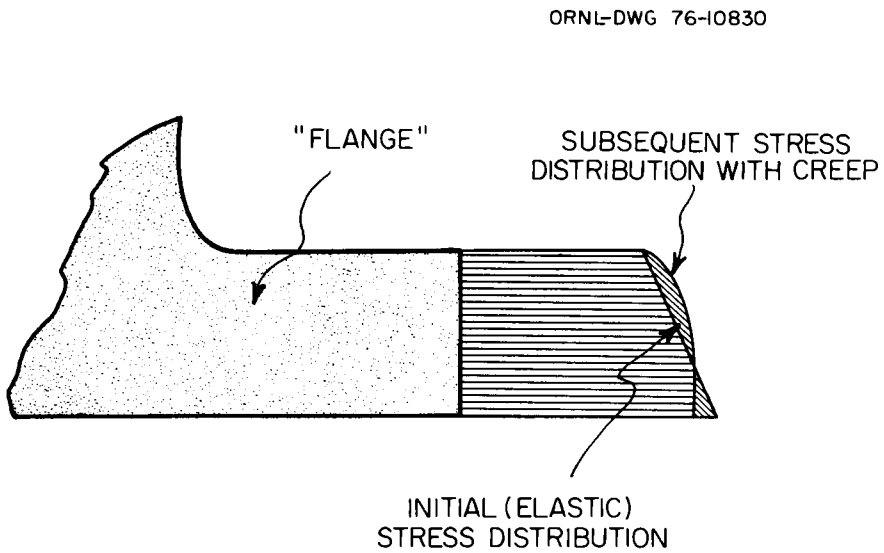

Fig. 6. Stress distribution on lower flange.

to that in the tension flange. If the cross-sectional area is the same for each, the average stress, i.e., $\sigma = F/A$, is also equal and opposite in each flange. The average stress in the present test is approximately ±69 MPa (10 ksi).

As stated above, symmetry about the plane of bending, together with uniformity along the gage length, leads to a linear strain distribution. The "slotted" beam is also geometrically symmetric about the plane P_2 (Fig. 5*a*), which, when combined with the postulate that the material behaves the same in tension and compression, further restricts the (linear) strain distribution to be antisymmetric about plane P_2 (Fig. 5*b*). In other words, *if* the material behaves equally in tension and compression, the "neutral axis" of the deformation must lie in the plane P_2 and, consequently, the strain at the respective outermost fibers of each flange must be equal and opposite. Conversely, *observed antisymmetry of the strain distribution implies equality of mechanical behavior in tension and compression.*

In the present experiment, the strain at the extreme fibers of the respective flanges was measured to be almost precisely equal and opposite, i.e., antisymmetric. Thus, using the above argument, it is concluded that the response of 2 1/4 Cr—1 Mo steel in this test is the same in tension and compression.

For a material that behaves differently in tension and compression, the observed strain distribution will not, in general, be antisymmetric about plane P_2. Figure 5*c* illustrates the hypothetical situation in which the material is "stronger" in compression than in tension. The axial strain (at any time) is shown to be greater at the extreme lower (tensile) fibers than at the uppermost (compressive) fibers, both flanges, of course, carrying the same average stress (magnitude).

The situation depicted in Fig. 5*c* could also correspond to that in which the material does (at a given temperature) behave equally in tension and compression but the temperature of each flange is different. Differences in temperature of, say, 1/2% around a

nominal value of 600°C could typically lead to 10–15% differences in creep rate. In the present test, the difference in temperature of the upper and lower flanges was held within approximately 0.2% of the nominal temperature as discussed in the next section.

THE EXPERIMENT

Load control during transients and reversals was accomplished through an MTS servocontrolled, hydraulic actuator system. During long hold periods (∿200–500 hr) load application was transferred to a dead-weight system. In either case, the measurement of load was made using a BLH load cell. Small load fluctuations did occur during the test, mostly due to friction in the dead-weight loading system. However, the variations never exceeded ±2 1/2% of the total load.

The elevated temperature was maintained by enclosing the entire beam in a resistance-heated furnace which was controlled through use of a chromel/alumel (type k) thermocouple located near the central region of the beam (Fig. 7). Platinum/platinum-10% rhodium (type s) thermocouples were mounted directly at each of the Boeing-type capacitive strain gages to ensure an accurate record of the temperature history at each flange. The average temperature of the two flanges was recorded as 564 ± 2.5°C (1047 ± 4.5°F) with a maximum temperature difference of the two flanges at any time of 1.2°C (2.2°F).

The Boeing-type capacitive strain gages were used with Endevco conditioning circuitry and their outputs, along with those of the thermocouples and load cell, were automatically scanned and recorded on a Datum data aquisition system. The sampling frequency varied over the course of the test from ∿1 per sec during load changes to ∿1 per day during the later portions of the hold periods. The data were stored on magnetic tapes and subsequently processed using an IBM/360 computer.

PHOTO 2814-76

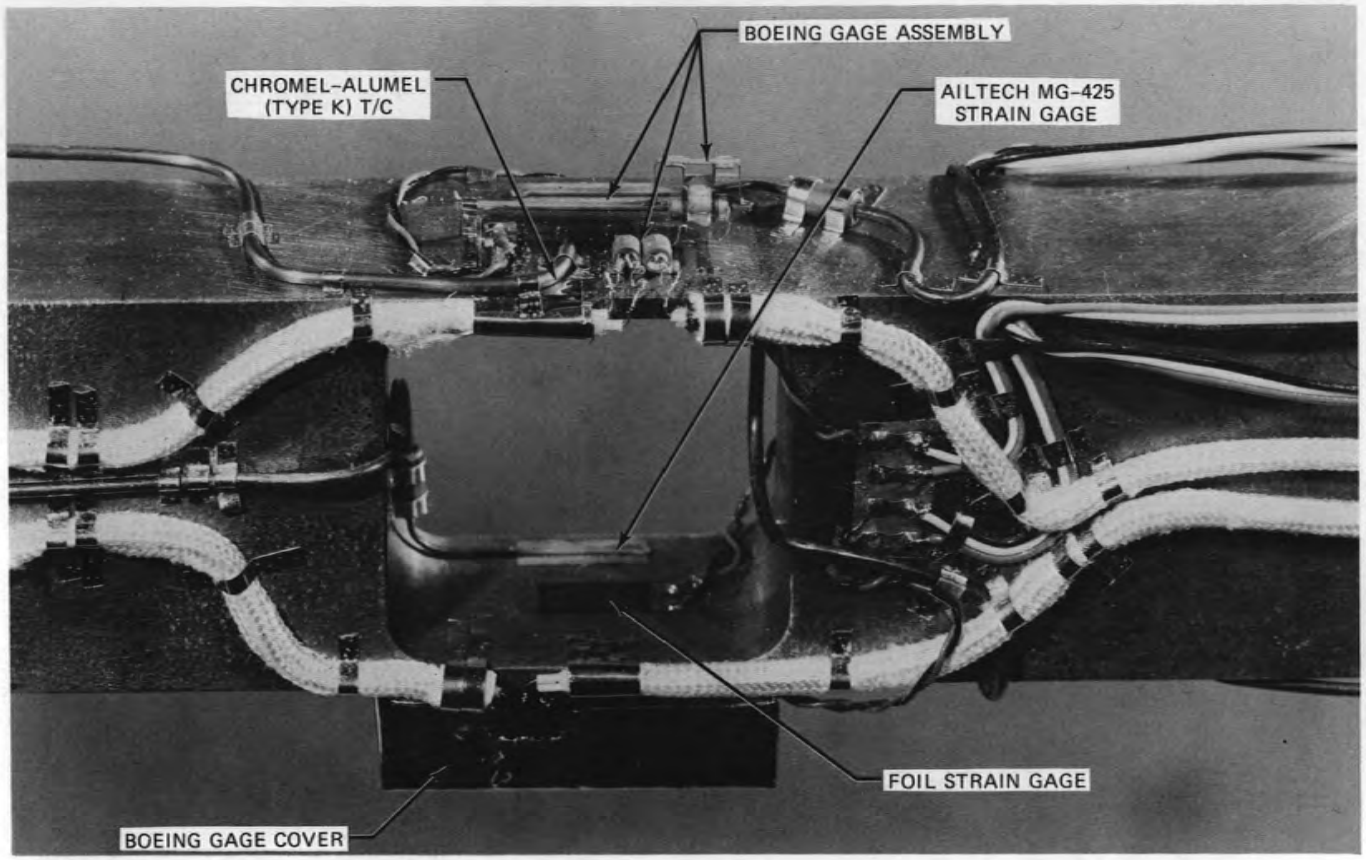

Fig. 7. Photograph of "slotted" beam showing locations of strain gages and thermocouples. The type s (platinum/platinum-10% rhodium) thermocouples are not shown. The Ailtech weldable, resistance-wire gages were intended to supplement the Boeing gages; however, they experienced considerable drift during the test. The foil gages were used in a room temperature calibration of the Boeing gages.

The beam material was fully annealed 2 1/4 Cr—1 Mo steel (heat 3P5601) and the nominal beam dimensions were as indicated in Fig. 2. The dimensions of the thin "flanges" were machined within a tolerance of ±.025 mm (.001 in.) in order to ensure nearly equal cross sectional areas.

CONCLUSIONS

There are two principal conclusions drawn from the present study; these are:

1. The elastic-creep response of annealed 2 1/4 Cr—1 Mo steel is effectively the same in compression as in tension.
2. The "slotted" beam provides a simple and accurate method of generating data in compression, particularly for making a direct comparison with tensile data as was done under item 1 above.

Knowledge of whether a particular metal (heat, product form, etc.) responds similarly in tension and compression, together with other basic information such as the degree of anisotropy, etc., is essential in formulating constitutive laws for multiaxial creep behavior. The present method provides a direct comparison of tensile and compressive behavior. Once the response in tension and compression is shown to be the same, as with 2 1/4 Cr—1 Mo steel, then creep data can be generated as needed through traditional tensile testing.

Investigations of the hardening and recovery characteristics of a material under cyclic loading, as well as its response following periods of unloading, are also essential ingredients in formulating constitutive laws. The present experiment provides an example of such a loading history (Fig. 3) and demonstrates the usefulness of the "slotted" beam in conducting such tests.

Several variations of the "slotted" beam technique, among which is a method of generating relaxation data in compression, are presently under consideration at ORNL. Such studies are part of the High Temperature Structural Design (HTSD) Program under which an extensive uniaxial and multiaxial testing program is being conducted toward a

more complete understanding of the high-temperature, inelastic behavior of reactor system metals.

ACKNOWLEDGMENTS

The writers are grateful to S. J. Claiborne for the preparation and instrumentation of the specimen and to J. A. Hawk for his help in conducting the test. Thanks also to J. A. Clinard for his assistance in reducing and analyzing the data and to J. M. Corum, manager of the High Temperature Structural Design Program, under whose supervision this research was performed.

ORNL/TM-5553
Dist. Category UC-79,
-79e, -79h, -79k

INTERNAL DISTRIBUTION

1. R. L. Battiste
2. J. J. Blass
3. M. K. Booker
4. C. R. Brinkman
5. J. W. Bryson
6. J. H. Butler
7. J. P. Callahan
8. A. E. Carden (consultant)
9-10. J. A. Clinard
11. C. W. Collins
12. W. E. Cooper
13-17. J. M. Corum
18. W. R. Corwin
19. F. L. Culler
20. J. R. Ellis
21. G. G. Fee
22. W. F. Ferguson
23. W. R. Gall
24. R. H. Gallagher (consultant)
25. M. J. Goglia
26. W. L. Greenstreet
27. A. G. Grindell
28. R. C. Gwaltney
29. W. O. Harms
30. H. W. Hoffman
31. S. K. Iskander
32. P. R. Kasten
33. R. T. King
34-35. R. L. Klueh
36-37. K. C. Liu
38. R. E. MacPherson
39. W. R. Martin
40. W. J. McAfee
41. W. J. McCarthy
42. H. E. McCoy
43. L. E. McNeese
44. J. G. Merkle
45. S. E. Moore
46. E. T. Onat (consultant)
47. P. Patriarca
48. H. Postma
49-53. C. E. Pugh
54. M. Richardson
55-59. D. N. Robinson
60. G. C. Robinson
61. W. K. Sartory
62. D. Scott
63. V. K. Sikka
64. G. M. Slaughter
65. J. E. Smith
66. I. Spiewak
67. J. P. Strizak
68-69. R. W. Swindeman
70. J. J. Taylor
71. D. B. Trauger
72. J. R. Weir
73. G. D. Whitman
74. W. J. Wilcox
75. G. T. Yahr
76. H. C. Young
77. Patent Office
78-79. Central Research Library
80. Y-12 Document Reference Section
81-86. Laboratory Records Department
87. Laboratory Records (RC)

Subcontractors

88. H. Armen, Jr., Grumman Aerospace Corporation, Bethpage, NY 11714
89. R. W. Barsoum, Combustion Engineering, Inc., Windsor, CT 06095
90. L. F. Coffin, General Electric Company, Research and Development Center P. O. Box 8, Schenectady, NY 12301
91. R. L. Egger, Boeing Company, Aerospace Group, P. O. Box 3999, Seattle, WA 98124
92. C. E. Jaske, Battelle-Columbus Laboratories, 505 King Ave., Columbus, OH 43201

93. R. I. Jetter, Atomics International, P. O. Box 309, Canoga Park, CA 91304
94. S. S. Manson, Case Western Reserve University, Cleveland, OH 44106
95. C. C. Schultz, Babcock & Wilcox Company, P. O. Box 835, Alliance, OH 44601
96. S. Y. Zamrik, Pennsylvania State University, University Park, PA 16802

EXTERNAL DISTRIBUTION

97-98. Director, Division of Reactor Development and Demonstration, U.S. Energy Research and Development Administration, Washington, DC 20545
99. Director, Reactor Division, USERDA, ORO
100. Research and Technical Support Division, USERDA, ORO
101-389. Given distribution as shown in TID-4500 under categories UC-79, -79e, -79h, -79k

☆ U.S. GOVERNMENT PRINTING OFFICE: 1976-748-189/464