OAK RIDGE NATIONAL LABORATORY LIBRARIES
3 4456 0555874 0

CENTRAL RESEARCH LIBRARY

ORNL/TM-5336

Cy 1

A Mathematical Model of a Phantom Developed for Use in Calculations of Radiation Dose to the Body and Major Internal Organs of a Japanese Adult

G. D. Kerr
J. M. Hwang
R. M. Jones

OAK RIDGE NATIONAL LABORATORY
CENTRAL RESEARCH LIBRARY
DOCUMENT COLLECTION
LIBRARY LOAN COPY
DO NOT TRANSFER TO ANOTHER PERSON
If you wish someone else to see this document, send in name with document and the library will arrange a loan.
UCN-7969
(3 3-67)

OAK RIDGE NATIONAL LABORATORY
OPERATED BY UNION CARBIDE CORPORATION FOR THE ENERGY RESEARCH AND DEVELOPMENT ADMINISTRATION

Printed in the United States of America. Available from
National Technical Information Service
U.S. Department of Commerce
5285 Port Royal Road, Springfield, Virginia 22161
Price: Printed Copy $4.00; Microfiche $2.25

This report was prepared as an account of work sponsored by the United States Government. Neither the United States nor the Energy Research and Development Administration, nor any of their employees, nor any of their contractors, subcontractors, or their employees, makes any warranty, express or implied, or assumes any legal liability or responsibility for the accuracy, completeness or usefulness of any information, apparatus, product or process disclosed, or represents that its use would not infringe privately owned rights.

ORNL/TM-5336

Contract No. W-7405-eng-26

HEALTH PHYSICS DIVISION

A MATHEMATICAL MODEL OF A PHANTOM DEVELOPED FOR USE IN CALCULATIONS OF RADIATION DOSE TO THE BODY AND MAJOR INTERNAL ORGANS OF A JAPANESE ADULT

G. D. Kerr, J. M. Hwang, and R. M. Jones

MAY 1976

OAK RIDGE NATIONAL LABORATORY
Oak Ridge, Tennessee 37830
operated by
UNION CARBIDE CORPORATION
for the
ENERGY RESEARCH AND DEVELOPMENT ADMINISTRATION

OAK RIDGE NATIONAL LABORATORY LIBRARIES

3 4456 0555874 0

A MATHEMATICAL MODEL OF A PHANTOM DEVELOPED FOR USE IN CALCULATIONS OF RADIATION DOSE TO THE BODY AND MAJOR INTERNAL ORGANS OF A JAPANESE ADULT*

G. D. Kerr, J. M. Hwang,[+] and R. M. Jones[++]

Health Physics Division
Oak Ridge National Laboratory
Oak Ridge, Tennessee 37830

ABSTRACT

A mathematical model of a phantom simulating the body and major internal organs of a Japanese adult has been developed for use in computer calculations of radiation dose. The total body height of the mathematical phantom is 162 cm, and the total body mass is 55 kg based on densities of 0.3, 1.4, and 1.0 g/cm^3 for the lung, skeleton, and bulk tissues of the body, respectively.

---

*Research sponsored by the Energy Research and Development Administration under contract with Union Carbide Corporation.

[+]Consultant, University of Tennessee, Knoxville, Tennessee.

[++]Graduate Student, Virginia Polytechnic Institute, Blacksburg, Virginia.

INTRODUCTION

The Health Physics Division of the Oak Ridge National Laboratory (ORNL) has participated for a number of years in liaison studies with the Atomic Bomb Casualty Commission (ABCC), which was recently reorganized and renamed the Radiation Effects Research Foundation (RERF). These liaison studies have been concerned with the development of techniques for estimation of the radiation dose received by survivors of the 1945 bombings of Hiroshima and Nagasaki, Japan.[1-7] A mathematical model of a phantom simulating the body and major internal organs of a Japanese adult has been developed recently as a part of liaison studies continued by RERF and ORNL. This phantom is similar mathematically to one developed at ORNL[8] to represent standard or reference man as defined by the International Commission on Radiological Protection (ICRP).[9,10] The ICRP standard or reference man, based mainly on anatomical data from European and American studies, has a total body mass of 70 kg and a total body height of 172 cm. In comparison, anatomical data[11-13] applicable to atomic-bomb survivors 20 years of age or older in 1945 indicated a mean total body mass and height of about 50 kg and 152 cm, respectively. While these differences in body size have a significant influence on depth dose from external gamma-ray and neutron fields similar to those experienced by atomic-bomb survivors,[6] the differences in body size between 1945 and present-day Japanese adults are negligible. To be of maximum usefulness, a mathematical phantom was developed with a total body mass and height of 55 kg and 162 cm, respectively, based on published anatomical data from several recent Japanese studies[14-16] and suggested total body characteristics for a standard (present-day)

Japanese adult by the National Institute of Radiological Sciences in Japan.[17] This mathematical phantom is not only suitable for use in the liaison studies by the RERF and ORNL, but it is also suitable for use in dosimetry studies by others. For example, the absorbed dose to bone marrow and the genetically significant dose from diagnostic and therapeutic radiation practices in Japan have been studied recently.[18-23]

DESCRIPTION OF THE PHANTOM

The total body of the phantom consists of three principal sections: (1) an elliptical cylinder representing the trunk and arm regions, (2) an elliptical cylinder topped by half an ellipsoid representing the head and neck region, and (3) two truncated elliptical cones representing the leg region. A small region with a front plane surface is attached to the legs to represent an approximation to the male genitalia. The exterior of the phantom is shown in Figure 1. Mathematical relationships defining these regions of the body are given in Appendix A. The origin of the coordinate system used in developing these mathematical relationships, as well as those defining the major internal organs, is located at the center of the base of the trunk and arm region. The positive Z-axis extends vertically through the head, and the positive Y-axis and X-axis extend through the back and left side of the phantom, respectively. A summary of the total body dimensions is given in Table 1. In developing the mathematical phantom, extensive use was made of measurements of the body sponsored by the Agency of Industrial Science and Technology of the Ministry of International Trade and Industry in Japan.[15]

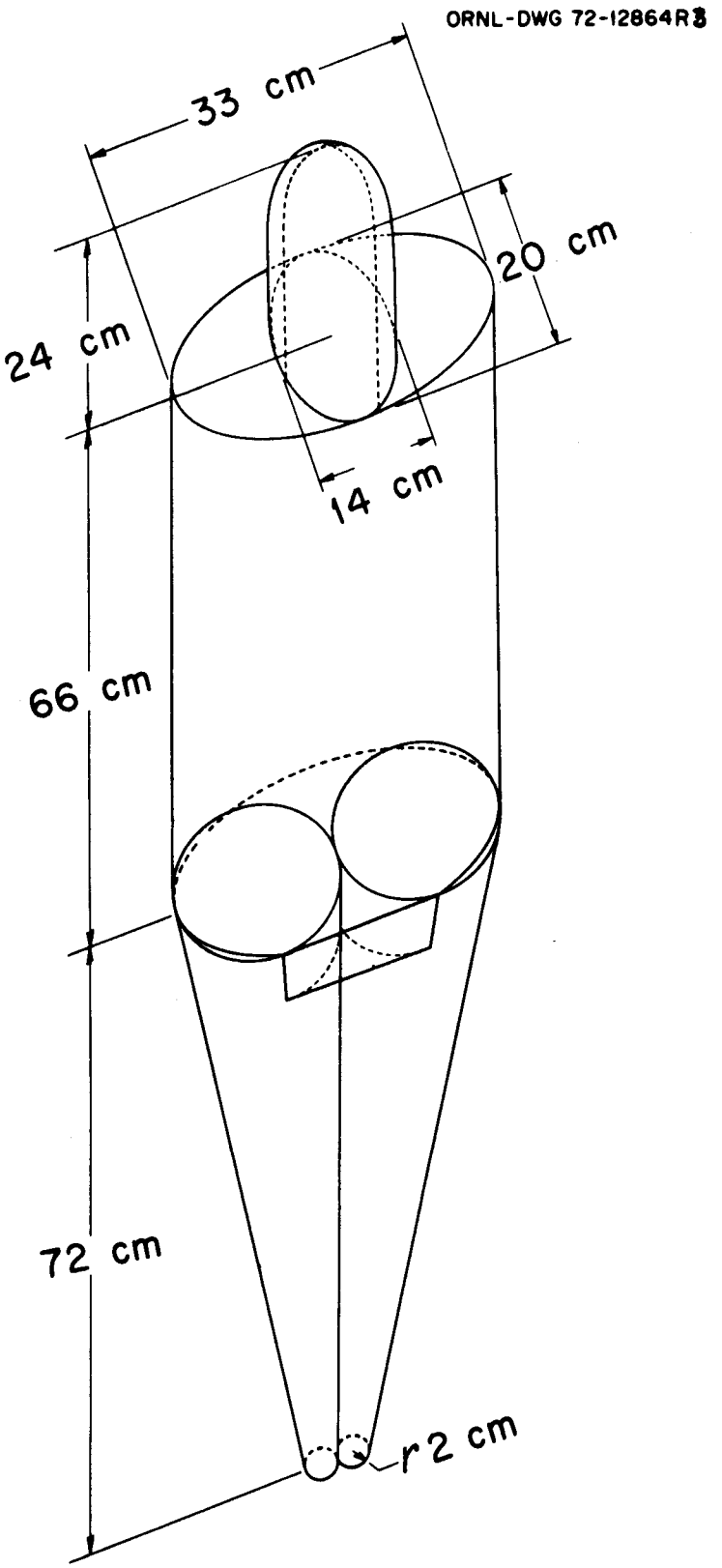

Fig. 1. Illustration of total body characteristics of a mathematical model of a phantom simulating the body of a Japanese adult.

Table 1. Summary of Total Body Dimensions of a Mathematical Model of a Phantom Simulating the Body of a Japanese Adult

Head and neck	
Length	24 cm
Circumference	54 cm
Minor (X) axis	14 cm
Major (Y) axis	20 cm
Vertical (Z) semi-axis	8.5 cm
Trunk and arms	
Length	66 cm
Circumference	85.7 cm
Major (X) axis	33 cm
Minor (Y) axis	20 cm
Legs	
Length	72 cm
Upper minor (X) axis	16.5 cm
Upper major (Y) axis	20 cm
Lower minor (X) axis	4 cm
Lower major (Y) axis	4 cm
Total body height	162 cm

An anterior view is given in Figure 2 of some of the major organs in the head and trunk region of the phantom. Also listed in the figure are other major organs included in the mathematical phantom, but not shown in this anterior view. The sizes, shapes, and locations of these major organs are discussed in Appendix A, which contains mathematical relationships defining each of the organs, and are shown in Appendix B, which contains computer plots of several coronal and transverse planes of the phantom. A summary of organ masses is given in Table 2. The mass of each organ in the table is based on volumes given in Appendix A

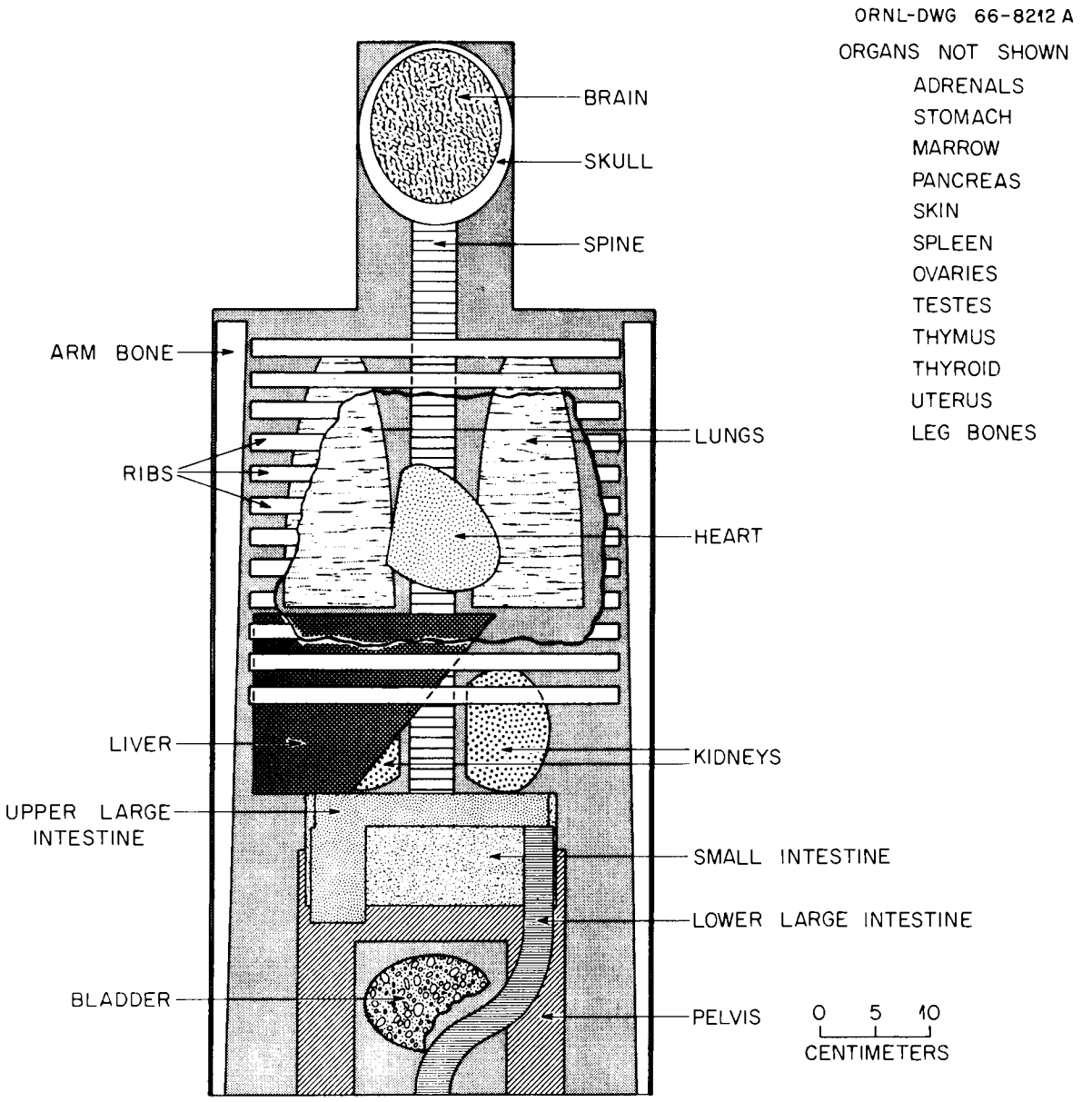

Fig. 2. Anterior view of the major internal organs in the head and trunk regions of the phantom.

Table 2. Summary of Organ Masses of a Phantom Simulating the Body and Major Internal Organs of a Japanese Adult

Organ	Mass in grams
Adrenals	15
Bladder	36
Brain	1,470
Gastrointestinal tract	
Stomach	120
Small intestines*	829
Large intestines	302
Heart	329
Kidneys	233
Liver	1,492
Lungs	781
Ovaries	8
Pancreas	50
Skeleton	7,825
Spleen	133
Testes	37
Thymus	26
Thyroid	20
Uterus	66
Total body	55,200

*Includes contents of small intestines.

and densities of 0.3, 1.4, and 1.0 gm/cm^3 for lung, skeleton (bone plus marrow), and other tissues of the body, respectively. These densities are consistent, in general, with those given for reference man and those used in dosimetry measurements and calculations. The organ masses of Table 2 expressed as a percent of total body mass of the phantom are consistent with Japanese autopsy data[11] and data for reference man.[10]

For example, the skeleton, with a total mass of 7.8 kg, represents about 14 percent of the total body mass of the 55 kg phantom. Ranges of 9 to 18 percent and 9 to 15 percent have been found in autopsy studies of males and females, respectively, between the ages of about 20 and 65 years.[10]

The mathematical model of the skeleton is illustrated in Figure 3. It consists of eight distinct parts: the leg bones, the arm bones, the pelvis, the spine, the skull, the ribs, the clavicles, and the scapulae. All but the scapulae and clavicles are shown in Figure 3. Shaded portions of this figure illustrate regions of active (red) marrow in the skeleton of the mathematical phantom. No attempt has been made to model the intricate intermixture of bone and bone marrow in the skeleton. Instead, the skeleton is considered to be a homogeneous mixture of bone and bone marrow, and the dose in each of the bone regions is weighted by the fraction of the total red or yellow marrow in that bone region and summed over all bone regions to estimate the bone marrow doses. The mass and distribution of both the red and yellow bone marrow in the skeleton in Table 3 were adopted from data of the Bone Marrow Research Group in Japan.[18]

DISCUSSION

Elemental composition of the skeleton (bone plus marrow), lung and bulk tissues of the body have been given in a number of reports.[8,24-26] Several of these reports[8,25,26] also contain discussions of the use of mathematical phantoms in radiation dose calculations from both sources internal and external to the body. The mathematical model of the phantom

ORNL-DWG 70-4810RA

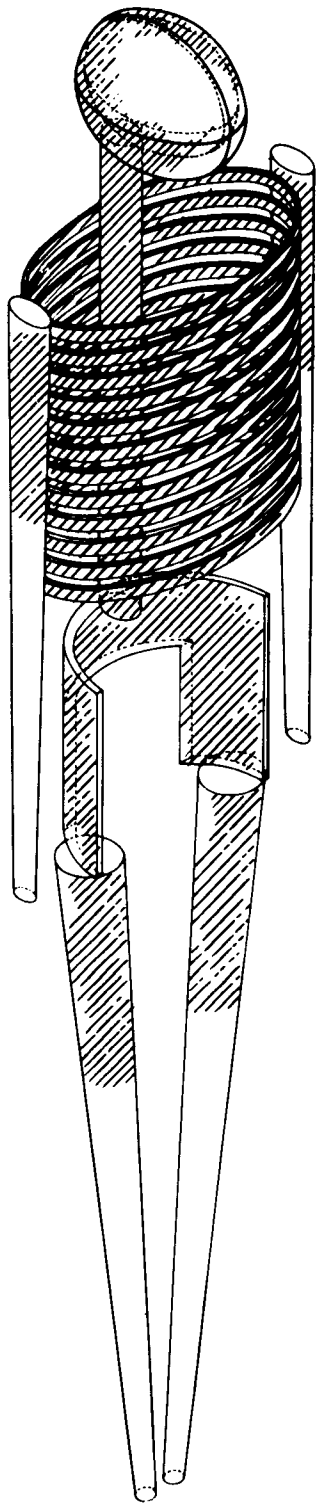

Fig. 3. Illustration of mathematical model of the skeleton with shaded portions indicating regions of active bone marrow.

Table 3. Masses of Red Bone Marrow, Bone, and Yellow Bone Marrow in Skeleton of a Mathematical Model of a Phantom Simulating the Body of a Japanese Adult

Bone region	Mass of red marrow in grams	Mass of bone in grams	Mass of yellow marrow in grams
Arms			
Upper[a]	28	263	85
Lower	0	616	49
Clavicles	6	42	11
Legs			
Upper[b]	88	1,144	262
Lower	0	1,237	202
Pelvis	219	352	94
Ribs	164	520	70
Scapulae	17	174	28
Skull			
Cranium[c]	56	601	93
Mandible	4	425	6
Spine			
Upper[d]	31	100	13
Middle	91	444	39
Lower[e]	80	137	34
Total	784	6,055	986

[a] $65 \geqslant Z \geqslant 49.55$ in Eq. (A7) of Appendix A.

[b] $0 \geqslant Z \geqslant -20.5$ in Eq. (A4) of Appendix A.

[c] $Z \geqslant -3Y + 73$ in Eq. (A10) of Appendix A.

[d] $66 \leqslant Z \leqslant 74.3$ in Eq. (A9) of Appendix A.

[e] $18.7 \leqslant Z \leqslant 33.1$ in Eq. (A9) of Appendix A.

simulating the body and major organs of a Japanese adult is being used to investigate the dose to red bone marrow for survivors of the bombings of Hiroshima and Nagasaki. Other mathematical models of phantoms developed at ORNL to simulate the bodies and major internal organs of a one-year-old and a five-year-old[27] are also being used to investigate the dose to red bone marrow as a function of the age of a survivor at the time of bombing. Results of these calculations and results of an analysis of leukemia data from medical studies of atomic-bomb survivors based on red bone marrow doses will be presented in future reports.

REFERENCES

1. R. H. Ritchie and G. S. Hurst, "Penetration of Weapons Radiation: Application to the Hiroshima-Nagasaki Studies," *Health Phys.* 1, 390-404 (1959).

2. E. T. Arakawa, "Radiation Dosimetry in Hiroshima and Nagasaki Atomic Bomb Survivors," *New Eng. J. Med.* 263, 488-493 (1960).

3. K. B. Noble (Ed.), *Shielding Survey and Radiation Dosimetry Plan: Hiroshima-Nagasaki,* Atomic Bomb Casualty Commission Report TR 7-67 (1967).

4. R. C. Milton and T. Shohoji, *Tentative 1965 Radiation Dose Estimation For Atomic Bomb Survivors,* Atomic Bomb Casualty Commission Report TR 1-68 (1968).

5. J. A. Auxier, "Physical Dose Estimation for A-Bomb Survivors — Studies at Oak Ridge, U.S.A.," *J. Radiation Res.* 16, Suppl., pp. 1-11 (Sept. 1975).

6. T. D. Jones, J. A. Auxier, J. S. Cheka, and G. D. Kerr, "*In Vivo* Dose Estimates for A-Bomb Survivors Shielded by Typical Japanese Houses," *Health Phys.* 28, 367-381 (1975).

7. G. D. Kerr, *Report of Liaison Studies with the Atomic Bomb Casualty Commission — Hiroshima, Japan — August 20, 1974 to September 17, 1974,* Oak Ridge National Laboratory Report ORNL-TM-4830 (February 1975).

8. W. S. Snyder, M. R. Ford, G. G. Warner, and H. L. Fisher, Jr., "Estimates of Absorbed Fractions for Monoenergetic Photon Sources Uniformly Distributed in Various Organs of a Heterogeneous Phantom," MIRD Pamphlet No. 5, *J. Nucl. Med.* 10, Suppl. No. 3 (August 1969).

9. Recommendations of the International Commission on Radiological Protection, *Report of Committee II on Permissible Dose for Internal Radiation,* ICRP Publication 2, Pergamon Press, Oxford (1960).

10. International Commission on Radiological Protection, *Report of the Task Group on Reference Man,* ICRP Publication 23, Pergamon Press, Oxford (1975).

11. S. Aimi, S. Yasoshima, M. Sugai, B. Sato, T. Sakai, and Y. Nakajima, "Studies on the Weight and Size of Internal Organs of Normal Japanese," *Acta Pathologica Japonica* 2(4), 173-200 (1952).

12. K. Sato, "Study on Weight of Heart and Degree of Cardiac Enlargement," *Hirosaki Medical Journal* 6, 1-6 (1954).

13. D. Seigel, *Height-Weight Tables, ABCC-JNIH Adult Health Study, Hiroshima and Nagasaki, 1958-60,* Atomic Bomb Casualty Commission Report TR 19-62 (1962).

14. N. Kimura, "A Farming and Fishing Village in Japan — Tanushimaru and Ushibuka," *Acta Med Scand,* Suppl. No. 460, 231-249 (1967).

15. M. Fujita, Y. Kimura, and M. Wada, "Body Measurement, The Size of Parts of the Body (7)," *Essays and Studies,* 20th Collection, Hiroshima Jagakuin College, pp. 81-110 (1970).

16. M. Fujita, Y. Kimura, and M. Wada, "Body Measurement, The Size of Parts of the Body (9)," *Essays and Studies,* 23rd Collection, Hiroshima Jagakuin College, pp. 261-279 (1973).

17. T. Hashizume, T. Maruyama, K. Nishizawa, and A. Nishimura, "Estimation of Absorbed Dose in Thyroids and Gonads of Survivors in Hiroshima and Nagasaki," *Acta Radiol.* 13(5), 411-424 (1974).

18. T. Miyakawa et al., "The Bone Marrow Dose in Tele-Radiotherapy in Japan," *Nipp. Act. Radiol.* 30, 368-384 (1970).

19. T. Hashizume, Y. Kato, Y. Kumamoto, H. Yamaguchi, and K. Nishizawa, "Genetically Significant Dose from Beam Therapy in Japan," *Health Phys.* 26, 449-459 (1974).

20. T. Hashizume, Y. Kato, Y. Kumamoto, K. Kawachi, K. Nishizawa, and H. Yamaguchi, "Population Mean Marrow Dose and Leukemia Significant Dose from Beam Therapy in Japan," *Health Phys.* 26, 461-467 (1974).

21. S. Sawada, S. Fujita, W. J. Russell, and K. Takeshita, *Radiological Practice in Hiroshima and Nagasaki, Trends from 1964 to 1970,* Atomic Bomb Casualty Commission Report TR 41-72 (1972).

22. W. J. Russell, *Medical X-Ray Exposure Among Hiroshima and Nagasaki Atomic Bomb Survivors,* Atomic Bomb Casualty Commission Report TR 29-71 (1971).

23. S. Antoku, H. Yoshinaga, and W. J. Russell, *Bone Marrow and Gonadal Dose In Roentgenography Excluding Posteroanterior Chest Examinations,* Atomic Bomb Casualty Commission Report TR 5-68 (1968).

24. I. H. Tipton, W. S. Snyder, and M. J. Cook, "Elemental Composition of Standard Man," *Health Phys. Div. Ann. Prog. Rept.,* ORNL-4007, pp. 240-241 (1966).

25. W. S. Snyder, M. R. Ford, G. G. Warner, and S. B. Watson, *A Tabulation of Dose Equivalent per Microcurie-Day for Source and Target Organs of an Adult for Various Radionuclides,* Oak Ridge National Laboratory Report ORNL-5000 (1974).

26. T. D. Jones, J. A. Auxier, W. S. Snyder, and G. G. Warner, "Dose to Standard Reference Man from External Sources of Monoenergetic Photons," *Health Phys.* 24, 241-255 (1973).

27. J. L. Hwang, R. L. Shoup, G. G. Warner, and J. W. Poston, *Mathematical Description of a One- and Five-Year-Old Child for Use in Dosimetry Calculations*, Oak Ridge National Laboratory Report ORNL-TM-5293 (1976).

APPENDIX A

DESCRIPTION OF A MATHEMATICAL MODEL OF A PHANTOM SIMULATING THE BODY OF A JAPANESE ADULT

In cases of left and right organs, only the mathematical expressions defining the left organ are given. The mathematical expressions for the right organ can be obtained by replacing X by -X in the mathematical expressions given for the left organ. The volume of each organ was obtained by integration. Geometrical shapes used to represent organs in the phantom are illustrated in detail in Refs. (8), (25), and (27).

Total Body

Trunk and Arms. The elliptical cylinder representing the trunk and arm regions of the body is defined by

$$\left(\frac{X}{16.5}\right)^2 + \left(\frac{Y}{10}\right)^2 \leqslant 1 \ , \quad 0 \leqslant Z \leqslant 66 \ . \tag{A1}$$

These regions of the phantom have a volume of 34,212 cm^3.

Head and Neck. The elliptical cylinder topped by half an ellipsoid representing the head and neck regions of the body are defined by

$$\left(\frac{X}{7}\right)^2 + \left(\frac{Y}{10}\right)^2 \leqslant 1 \ , \quad 66 \leqslant Z \leqslant 81.5 \ , \tag{A2}$$

and

$$\left(\frac{X}{7}\right)^2 + \left(\frac{Y}{10}\right)^2 + \left(\frac{Z - 81.5}{8.5}\right)^2 \leqslant 1 \ , \quad 81.5 \leqslant Z \leqslant 90 \ . \tag{A3}$$

These regions of the phantom have a volume of 4,655 cm^3.

Legs. The leg region of the body is represented by the frustrums of two elliptical cones. Mathematical expressions defining the left leg region of the phantom are

$$\left[\left(\frac{X}{8.25 + Z/11.52}\right) - 1\right]^2 + \left(\frac{Y}{10 + Z/9}\right)^2 \leqslant 1 , \quad -72 \leqslant Z \leqslant 0 . \qquad \text{(A4)}$$

The total volume of the leg region of the phantom is 15,796 cm^3.

Genitalia. The genitalia region (male) of the phantom is defined by

$$-4.8 \leqslant Z \leqslant 0 ,$$

$$-\left(8.25 + \frac{Z}{11.52}\right) \leqslant X \leqslant \left(8.25 + \frac{Z}{11.52}\right) ,$$

$$-\left(10 + \frac{Z}{9}\right) \leqslant Y \leqslant 0 , \qquad \text{(A5)}$$

and

$$\left[\left(\frac{X}{8.25 + Z/11.52}\right) - 1\right]^2 + \left(\frac{Y}{10 + Z/9}\right)^2 \leqslant 1 .$$

This region of the phantom has a volume of 124 cm^3.

Skeleton

Leg Bones. Each leg bone is the frustrum of an elliptical cone. The left leg bone is defined by

$$\left(X - 8.25 - \frac{6.25}{71.8} Z\right)^2 + Y^2 \leqslant \left(3.2 + \frac{2.3}{71.8} Z\right)^2 ,$$

$$-71.8 \leqslant Z \leqslant 0 . \qquad \text{(A6)}$$

Total volume of both leg bones of the phantom is 2,095 cm^3.

Arm Bones. Each arm bone is the frustrum of an elliptical cone. The left arm bone is defined by

$$\left[\frac{(1.3/130)(Z - 65) + (X - 15.0)}{1.3}\right]^2 + \left(\frac{Y}{2.4}\right)^2 \leqslant \left[\frac{130 + (Z - 65)}{130}\right]^2 ,$$

$$0 \leqslant Z \leqslant 65 . \tag{A7}$$

Total volume of the arm bones is 743 cm^3.

Pelvis. The pelvis is a portion of the volume between two nonconcentric circular cylinders defined by

$$X^2 + (Y + 3)^2 \leqslant (11.3)^2 ,$$

$$X^2 + (Y + 3.8)^2 \geqslant (10.7)^2 ,$$

$$Y + 3 \geqslant 0 ,$$

$$0 \leqslant Z \leqslant 18.7 ,$$

$$Y \leqslant 5 \quad \text{if} \quad Z \leqslant 11.3 . \tag{A8}$$

Its volume is 475 cm^3.

Spine. The spine is an elliptical cylinder. It is defined by the mathematical expressions

$$\left(\frac{X}{1.8}\right)^2 + \left(\frac{Y - 5.5}{2.2}\right)^2 \leqslant 1 ,$$

$$18.7 \leqslant Z \leqslant 74.3 , \tag{A9}$$

and has a volume of 692 cm^3.

Skull. The skull is the volume between two nonconcentric ellipsoids defined by

$$\left(\frac{X}{6}\right)^2 + \left(\frac{Y}{9}\right)^2 + \left(\frac{Z - 82.5}{6.5}\right)^2 \geqslant 1 ,$$

$$\left(\frac{X}{6.8}\right)^2 + \left(\frac{Y}{9.8}\right)^2 + \left(\frac{Z - 81.5}{8.3}\right)^2 \leqslant 1 . \tag{A10}$$

It has a volume of 847 cm^3.

Ribs. The ribs are a series of equally spaced bands sliced out of two concentric, elliptical cylinders. They have a total volume of 539 cm^3 and are defined by

$$\left(\frac{X}{13.7}\right)^2 + \left(\frac{Y}{9.8}\right)^2 \leqslant 1 ,$$

$$\left(\frac{X}{13.23}\right)^2 + \left(\frac{Y}{9.33}\right)^2 \geqslant 1 ,$$

$$33.1 \leqslant Z \leqslant 63.46 , \tag{A11}$$

when the truncated integer of $(Z - 33.1)/1.32$ is even.

Clavicles. The clavicles are two portions of a torus located slightly inside the cylinder defining the rib cage and just above the top rib. They have a total volume of 42 cm^3 and are defined by

$$(Z - 64.35)^2 + \{15.0 - [X^2 + (Y - 6)^2]^{1/2}\}^2 \leqslant (0.715)^2 ,$$

$$0.62257 \leqslant \frac{11.1 - Y}{|X|} \leqslant 7.5 , \quad Y \leqslant 0 . \tag{A12}$$

Scapulae. The scapulae are located immediately outside the ribs and are represented by two wedge shaped portions sliced out of two nonconcentric, elliptical cylinders by horizontal and vertical planes. They have a total volume of 156 cm^3 and are defined by the expressions

$$\left(\frac{X}{13.7}\right)^2 + \left(\frac{Y}{9.8}\right)^2 \geqslant 1 ,$$

$$\left(\frac{X}{15.5}\right)^2 + \left(\frac{Y}{9.8}\right)^2 \leqslant 1 , \tag{A13}$$

and

$$Y > 0 , \qquad 0.25 < \frac{Y}{X} < 0.80 , \qquad 50.0 \leqslant Z \leqslant 63.0 .$$

Adrenals. Each adrenal is half an ellipsoid located on top of a kidney. The left adrenal is defined by

$$\left(\frac{X - 4.4}{1.4}\right)^2 + \left(\frac{Y - 6.3}{0.5}\right)^2 + \left(\frac{Z - 37}{5}\right)^2 \leqslant 1 , \qquad 37 \leqslant Z \leqslant 42 . \tag{A14}$$

Total volume of both adrenals is 15 cm^3.

Bladder. The bladder is represented by the volume between two concentric ellipsoids. It is defined by

$$\left(\frac{X}{4.575}\right)^2 + \left(\frac{Y + 4.5}{3.191}\right)^2 + \left(\frac{Z - 7.54}{3.191}\right)^2 \leqslant 1 ,$$

$$\left(\frac{X}{4.342}\right)^2 + \left(\frac{Y + 4.5}{2.958}\right)^2 + \left(\frac{Z - 7.54}{2.958}\right)^2 \leqslant 1 , \tag{A15}$$

and has a wall thickness of about 0.2 cm and volume of 36 cm^3. The contents of the bladder defined by the smaller ellipsoid have a volume of 159 cm^3.

Brain. The brain is an ellipsoid defined by

$$\left(\frac{X}{6}\right)^2 + \left(\frac{Y}{9}\right)^2 + \left(\frac{Z - 82.5}{6.5}\right)^2 \leqslant 1 \ . \tag{A16}$$

and the volume is 1,470 cm^3.

Gastrointestinal Tract

Stomach. The stomach is defined by the volume between two concentric ellipsoids. It is defined by

$$\left(\frac{X - 6}{3.7}\right)^2 + \left(\frac{Y + 4}{2.7}\right)^2 + \left(\frac{Z - 34}{8.0}\right)^2 \leqslant 1 \ ,$$

$$\left(\frac{X - 6}{3.17}\right)^2 + \left(\frac{Y + 4}{2.17}\right)^2 + \left(\frac{Z - 34}{7.47}\right)^2 \geqslant 1 \ , \tag{A17}$$

and has a wall thickness of about 0.5 cm and volume of 120 cm^3. Contents of the stomach have a volume of 215 cm^3.

Small Intestine. No attempt was made to define the specific configuration of the small intestine. The region of the small intestines are however represented by a section of a circular cylinder located in the pelvic region. Mathematical expressions defining the region of the small intestine are

$$X^2 + (Y + 3.8)^2 \leqslant (10.7)^2 \ ,$$

$$-4.67 \leqslant Y \leqslant 1.96 \ ,$$

$$17.43 \leqslant Z \leqslant 26 \ . \tag{A18}$$

After the portion of the large intestine within this region is excluded, the volume of the small intestine and contents of the small intestine is 829 cm^3.

Upper Large Intestine. The upper large intestine consists of an ascending colon and a transverse colon. Both are represented by volumes between concentric cylinders. The ascending colon is defined by

$$(X + 8)^2 + (Y + 2.2)^2 \leqslant (2.3)^2 ,$$

$$(X + 8)^2 + (Y + 2.2)^2 \geqslant (1.65)^2 ,$$

$$14.3 \leqslant Z \leqslant 23.2 . \tag{A19}$$

It has a volume of 72 cm^3 and a wall thickness of 0.65 cm according to this model. Contents of the ascending colon have a volume of 76 cm^3.

The transverse colon is defined by

$$\left(\frac{Y + 2.2}{2.3}\right)^2 + \left(\frac{Z - 24.6}{1.4}\right)^2 \leqslant 1 ,$$

$$\left(\frac{Y + 2.2}{1.8}\right)^2 + \left(\frac{Z - 24.6}{0.9}\right)^2 \geqslant 1 ,$$

$$-9.8 \leqslant X \leqslant 9.8 . \tag{A20}$$

It has a wall thickness of 0.5 cm and a volume of 98 cm^3. The contents of the transverse colon have a volume of 100 cm^3.

Lower Large Intestine. The lower large intestine consists of a descending colon and a sigmoid colon. Expressions defining the descending colon are

$$\left(\frac{X - X_0}{1.7}\right)^2 + \left(\frac{Y - Y_0}{2.0}\right)^2 \leqslant 1 ,$$

$$\left(\frac{X - X_0}{1.4}\right)^2 + \left(\frac{Y - Y_0}{1.28}\right)^2 \geqslant 1 ,$$

$$8.2 \leqslant Z \leqslant 23.2 , \tag{A21}$$

where

$$X_0 = 8.4 + \frac{0.2(Z - 23.2)}{15} ,$$

$$Y_0 = \frac{2.3(8.2 - Z)}{15} .$$

It has a volume of 76 cm^3 and a wall thickness varying from 0.3 to 0.7 cm. Contents of the descending colon have a volume of 84 cm^3.

The sigmoid colon is represented by portions of two torii. Expressions defining the upper portion of the sigmoid colon are

$$\{[(X - 2.8)^2 + (Z - 8.2)^2]^{1/2} - 5.4\}^2 + Y^2 \leqslant (1.45)^2 ,$$

$$\{[(X - 2.8)^2 + (Z - 8.2)^2]^{1/2} - 5.4\}^2 + Y^2 \geqslant (0.85)^2 ,$$

$$X \geqslant 2.8 , \quad Z \leqslant 8.2 , \tag{A22}$$

and those defining the lower portion are

$$\{[(X - 2.8)^2 + Z^2]^{1/2} - 2.8\}^2 + Y^2 \leqslant (1.45)^2 ,$$

$$\{[(X - 2.8)^2 + Z^2]^{1/2} - 2.8\}^2 + Y^2 \geqslant (0.85)^2 ,$$

$$X \geqslant 2.8 , \quad Z \geqslant 0 . \tag{A23}$$

It has a wall thickness of 0.6 cm and a volume of 56 cm^3. Contents of the sigmoid colon have a volume of 92 cm^3.

Heart. The heart is half an ellipsoid capped by a hemisphere which is cut by a plane. Expressions defining the heart are

$$X_1 = 0.6943(X + 0.8) - 0.3237(Y + 2.7) - 0.6428(Z - 48.5) ,$$

$$Y_1 = 0.4226(X + 0.8) + 0.9063(Y + 2.7) ,$$

$$Z_1 = 0.5826(X + 0.8) - 0.2717(Y + 2.7) + 0.766(Z - 48.5) ,$$

and

$$\left(\frac{X_1}{6.5}\right)^2 + \left(\frac{Y_1}{4.1}\right)^2 + \left(\frac{Z_1}{4.1}\right)^2 \leqslant 1 ,$$

$$X_1{}^2 + Y_1{}^2 + Z_1{}^2 \leqslant (4.1)^2 \quad \text{if} \quad X_1 < 0 ,$$

$$\frac{X_1}{2.4} + \frac{Z_1}{4.1} \geqslant -1 \quad \text{if} \quad X_1 < 0 . \tag{A24}$$

The volume of the heart is 329 cm^3.

Kidneys. Each kidney is an ellipsoid cut by a plane. The left kidney is defined by

$$\left(\frac{X - 5.7}{4.2}\right)^2 + \left(\frac{Y - 5.8}{1.3}\right)^2 + \left(\frac{Z - 31.5}{5.5}\right)^2 \leqslant 1 , \quad X \geqslant 2.9 . \tag{A25}$$

Total volume of the kidneys is 233 cm^3.

Liver. The liver is a wedge shaped portion of an elliptical cylinder. It is defined by the expressions

$$\left(\frac{X}{13}\right)^2 + \left(\frac{Y}{8}\right)^2 \leqslant 1 \ ,$$

$$\frac{X}{28} + \frac{Y}{29} - \frac{Z}{42} \leqslant -1 \ ,$$

$$26 \leqslant Z \leqslant 42 \ , \tag{A26}$$

and has a volume of 1,492 cm^3.

Lungs. Each lung is half an ellipsoid with an anterior section removed. The left lung is defined by

$$\left(\frac{X - 7.5}{4.6}\right)^2 + \left(\frac{Y}{6.9}\right)^2 + \left(\frac{Z - 42.5}{22}\right)^2 \leqslant 1 \ ,$$

$$\left(\frac{X - 2.1}{4.6}\right)^2 + \left(\frac{Y}{6.9}\right)^2 + \left(\frac{Z - 42.5}{22}\right)^2 \geqslant 1 \quad \text{if} \quad Y < 0 \ . \tag{A27}$$

Total volume of the lungs is 2,602 cm^3.

Ovaries. Each ovary is represented by an ellipsoid. The left ovary is defined by

$$(X - 4.8)^2 + \left(\frac{Y}{0.5}\right)^2 + \left(\frac{Z - 14}{2}\right)^2 \leqslant 1 \ . \tag{A28}$$

Total volume of both ovaries is 8.4 cm^3.

Pancreas. The pancreas is half an ellipsoid with a section removed. It is defined by

$$\left(\frac{X}{13}\right)^2 + Y^2 + \left(\frac{Z - 35}{2.7}\right)^2 \leqslant 1 \ ,$$

$$X \geqslant 0 \ , \quad Z \geqslant 35 \quad \text{if} \quad X \geqslant 2.6 \ , \tag{A29}$$

and has a volume of 50 cm^3.

Skin. The dermis and epidermis are represented by a layer of 0.2 cm thickness extending over the entire exterior of the phantom. This layer representing the skin has a volume of 2,390 cm^3.

Spleen. The spleen is defined by the ellipsoid

$$\left(\frac{X - 8.8}{3.2}\right)^2 + \left(\frac{Y - 3.0}{1.8}\right)^2 + \left(\frac{Z - 36.5}{5.5}\right)^2 \leqslant 1 \ , \tag{A30}$$

and has a volume of 133 cm^3.

Testes. The testes are ellipsoids defined by

$$\left(\frac{X \pm 1.3}{1.3}\right)^2 + \left(\frac{Y + 8}{1.5}\right)^2 + \left(\frac{Z + 2.3}{2.3}\right)^2 \leqslant 1 \ , \tag{A31}$$

where the plus sign is used for the right testicle and the minus for the left. Total volume of the testes is 37 cm^3.

Thymus. The thymus is represented by an ellipsoid. It is defined by

$$\left(\frac{X + 2}{3}\right)^2 + \left(\frac{Y + 6}{0.5}\right)^2 + \left(\frac{Z - 57}{4.1}\right)^2 \leqslant 1 \ , \tag{A32}$$

and has a volume of 26 cm^3.

Thyroid. The lobes of the thyroid are wedge shaped volumes cut from two concentric cylinders. They have a total volume of 20 cm^3 and are defined by

$$X^2 + (Y + 6)^2 \leqslant (2.2)^2 ,$$

$$X^2 + (Y + 6)^2 \geqslant 1 ,$$

$$Y + 6 \leqslant 0 ,$$

$$66 \leqslant Z \leqslant 71 ,$$

$$[(Y + 6) - |X|]^2 \geqslant 2[X^2 + (Y + 6)^2]\ \tau^2 , \tag{A33}$$

where

$$\tau = \frac{2(\sqrt{2} - 2)}{5} (Z - 66) + 1$$

$$0 \leqslant Z - 66 \leqslant \frac{5}{4} ,$$

and

$$\tau = \frac{2(2 - \sqrt{2})}{15} (Z - 66) + \frac{2\sqrt{2} - 1}{3}$$

for

$$\frac{5}{4} \leqslant Z - 66 \leqslant 5 .$$

<u>Uterus</u>. The uterus is an ellipsoid cut by a plane. It is defined by

$$\left(\frac{X}{2.5}\right)^2 + \left(\frac{Y + 2}{5}\right)^2 + \left(\frac{Z - 13}{1.5}\right)^2 \leqslant 1 , \quad Y \geqslant -4.5 , \tag{A34}$$

and has a volume of 66 cm^3.

APPENDIX B

COMPUTER PLOTS OF THE MATHEMATICAL MODEL OF A PHANTOM SIMULATING THE BODY OF A JAPANESE ADULT

The mathematical model of a phantom simulating the body of a Japanese adult (Appendix A) has been coded into several subroutines for use in Monte Carlo and other computer techniques for calculating radiation dose. These subroutines have been checked for proper positioning of internal organs using a computer plotting program similar to that described in Ref. (27). Plots showing several coronal (XZ) planes are presented in Fig. B1. In Fig. B2, one coronal plane and two lateral (XY) planes are presented to show the location and shape of the thyroid. A number of lateral planes are presented in Figs. B3 through B6.

ORNL DWG. 76-3129

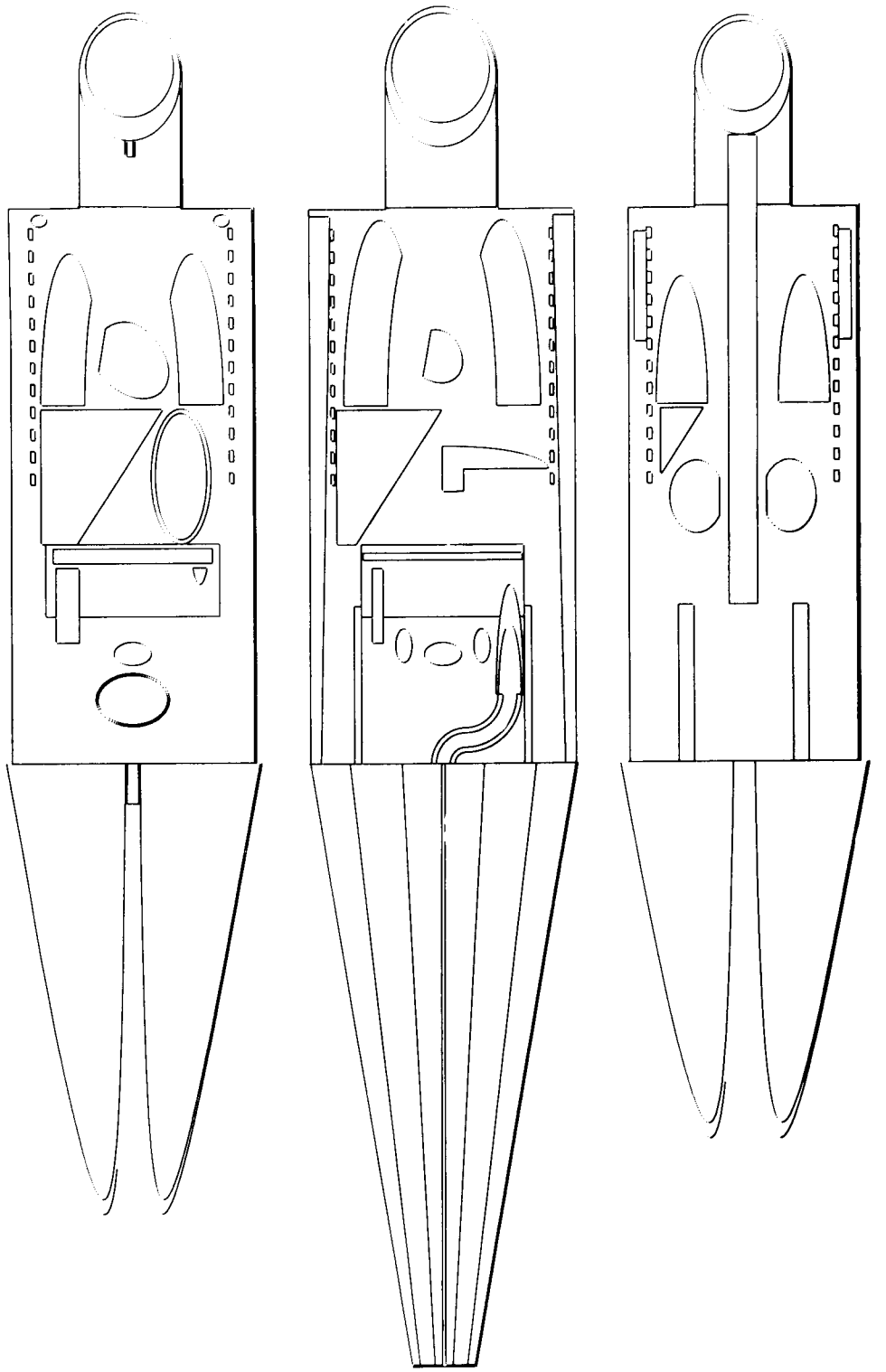

Y = -4.00 Y = 0.0 Y = 5.00

Fig. B1. Coronal (XZ) planes at Y = -4, 0, and 5 shown from left to right, respectively.

ORNL DWG. 76-5920

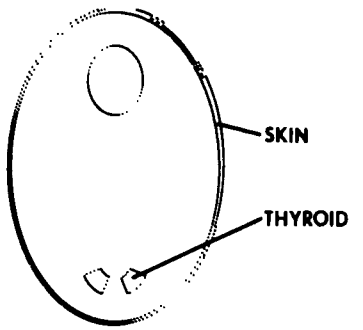

Z = 70.00

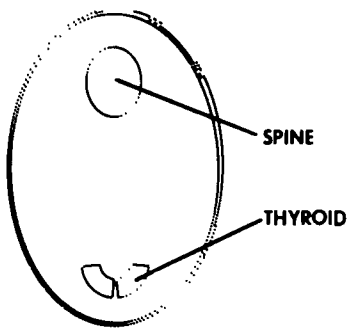

Z = 68.00

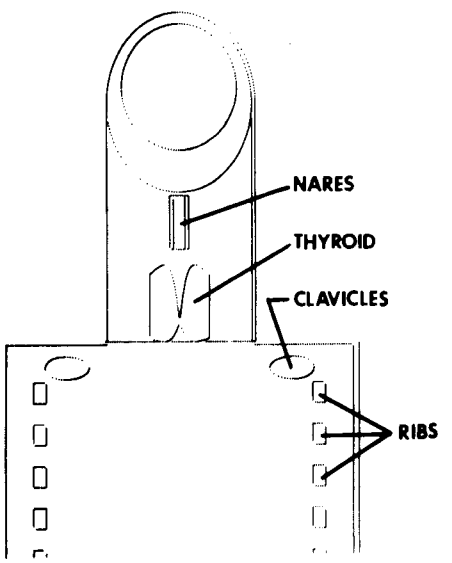

Y = -7.00

Fig. B2. Lateral (XY) planes at X = 70 and 68 and coronal (XZ) plane at Y = -7 shown from top to bottom, respectively.

ORNL DWG. 76-3128

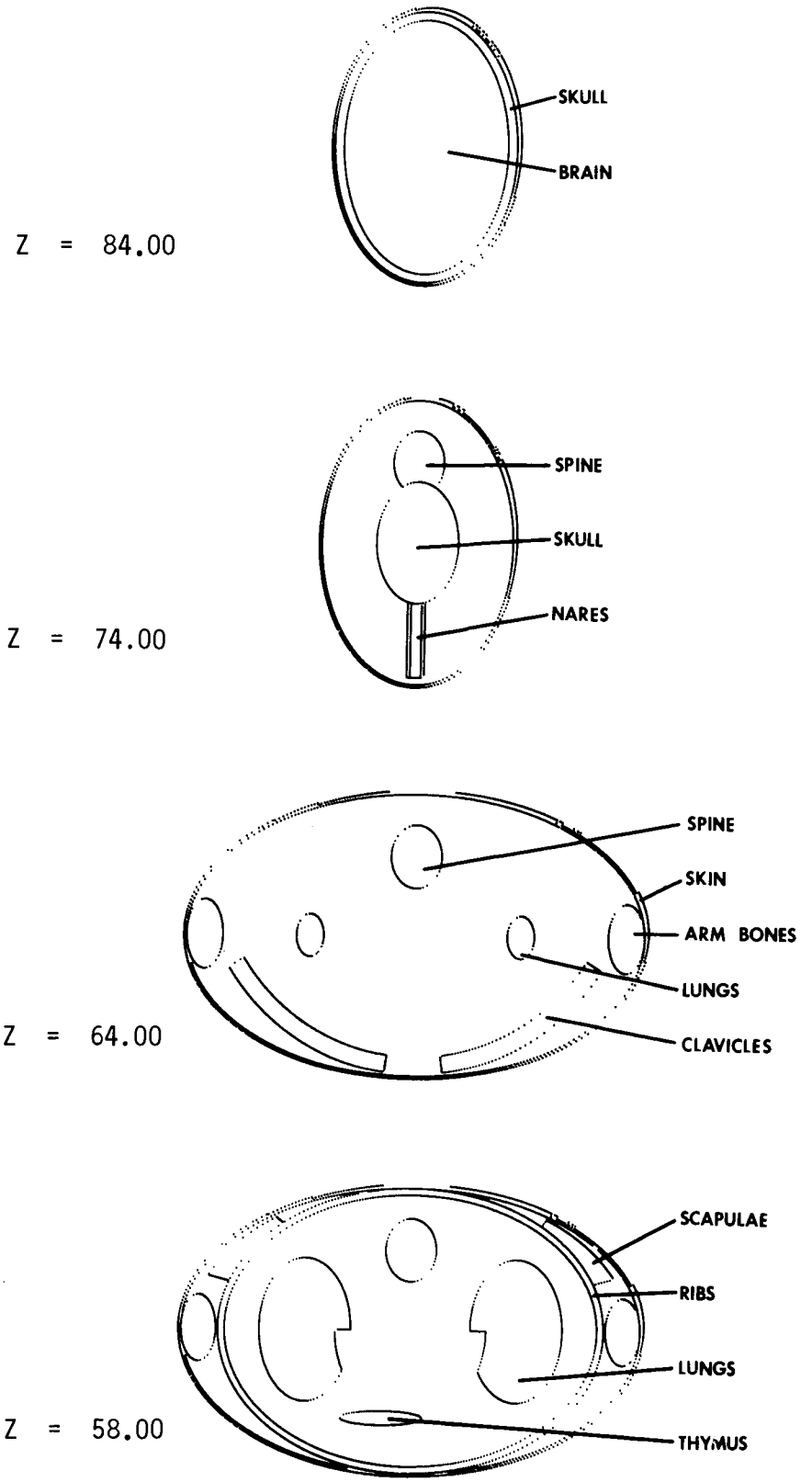

Fig. B3. Lateral (XY) planes at Z = 84, 74, 64, and 58 shown from top to bottom, respectively.

ORNL DWG. 76-3126

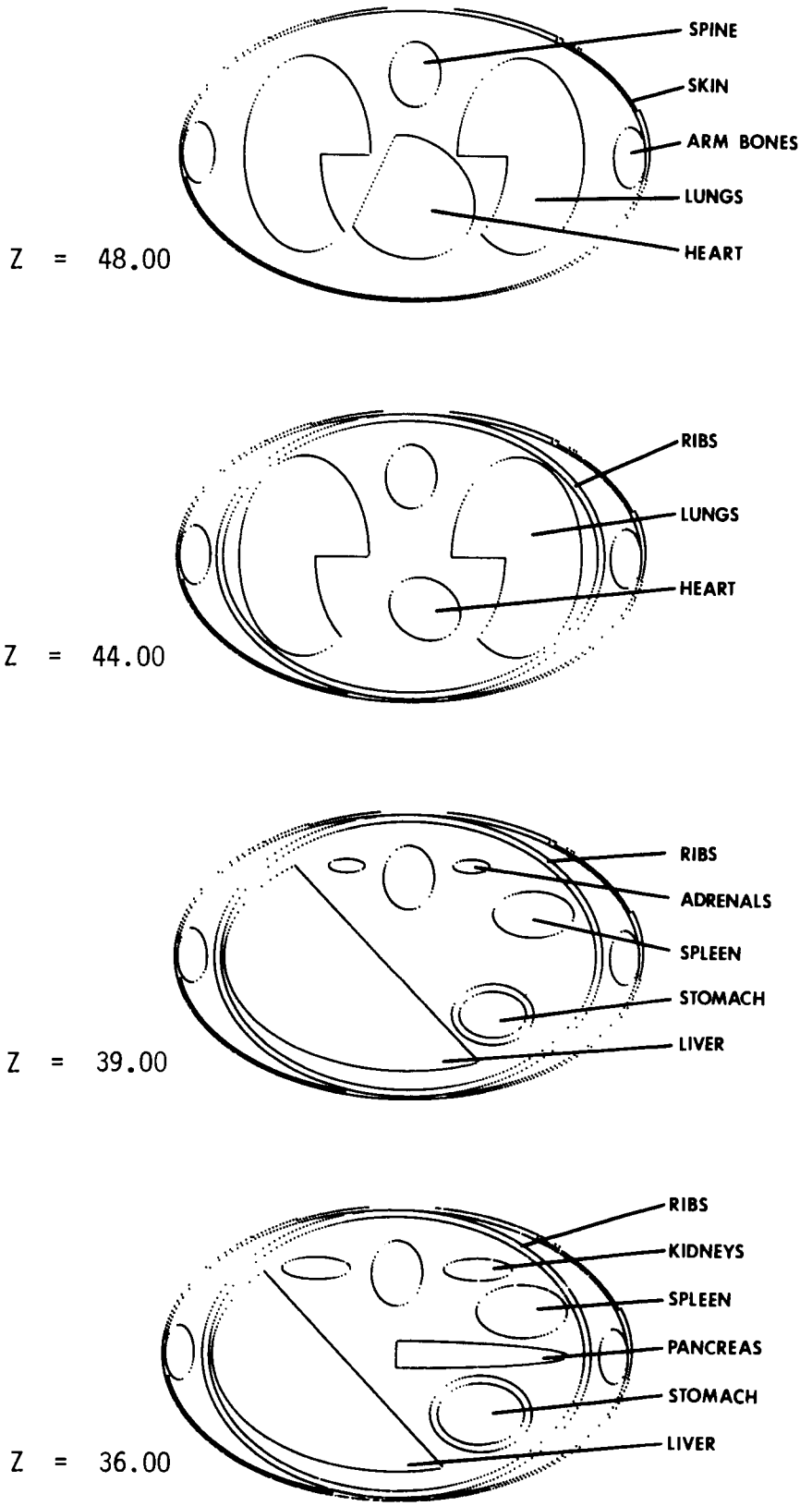

Fig. B4. Lateral (XY) planes at Z = 48, 44, 39, and 36 shown from top to bottom, respectively.

ORNL DWG. 76-3130

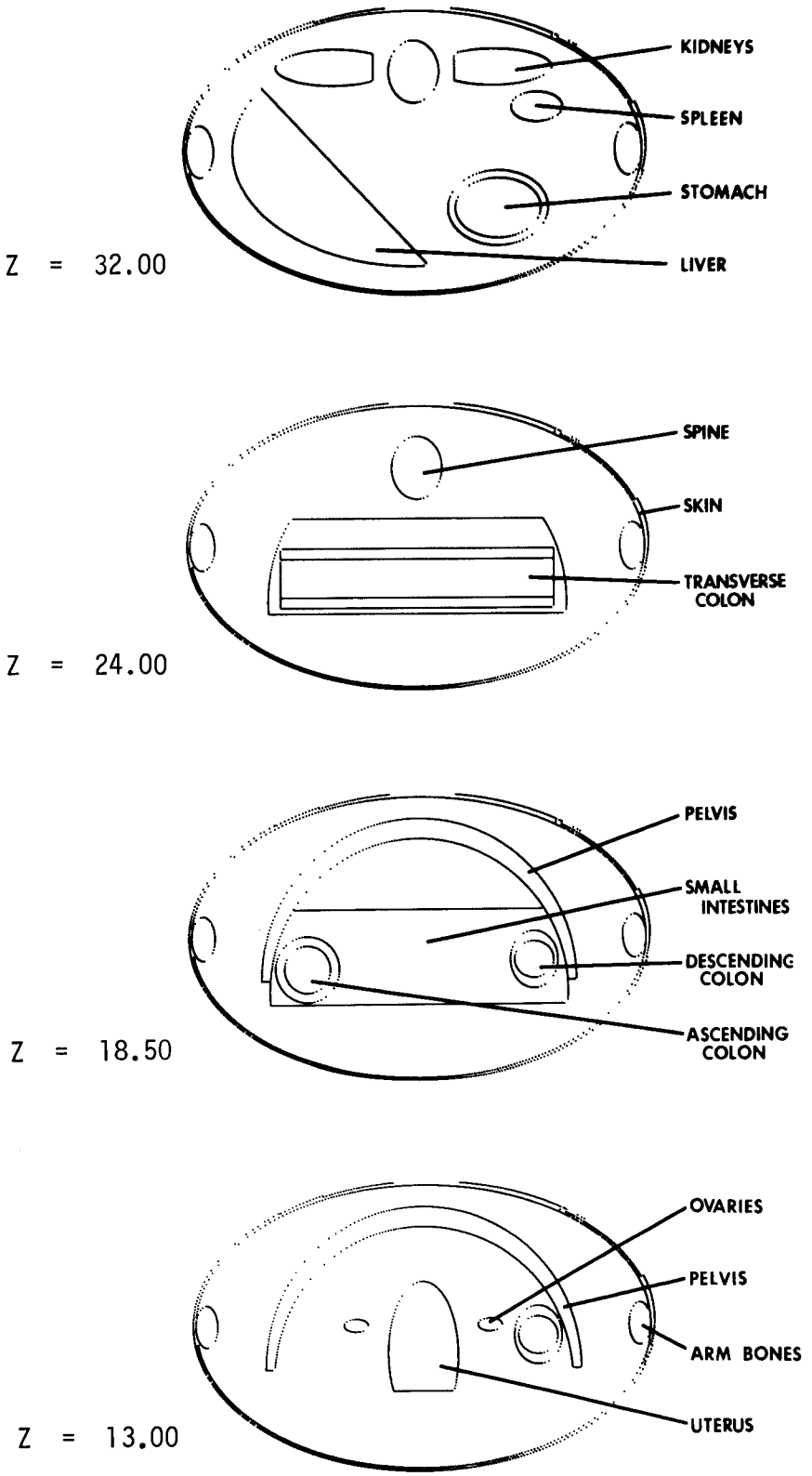

Fig. B5. Lateral (XY) planes at Z = 32, 24, 18.5, and 13 shown from top to bottom, respectively.

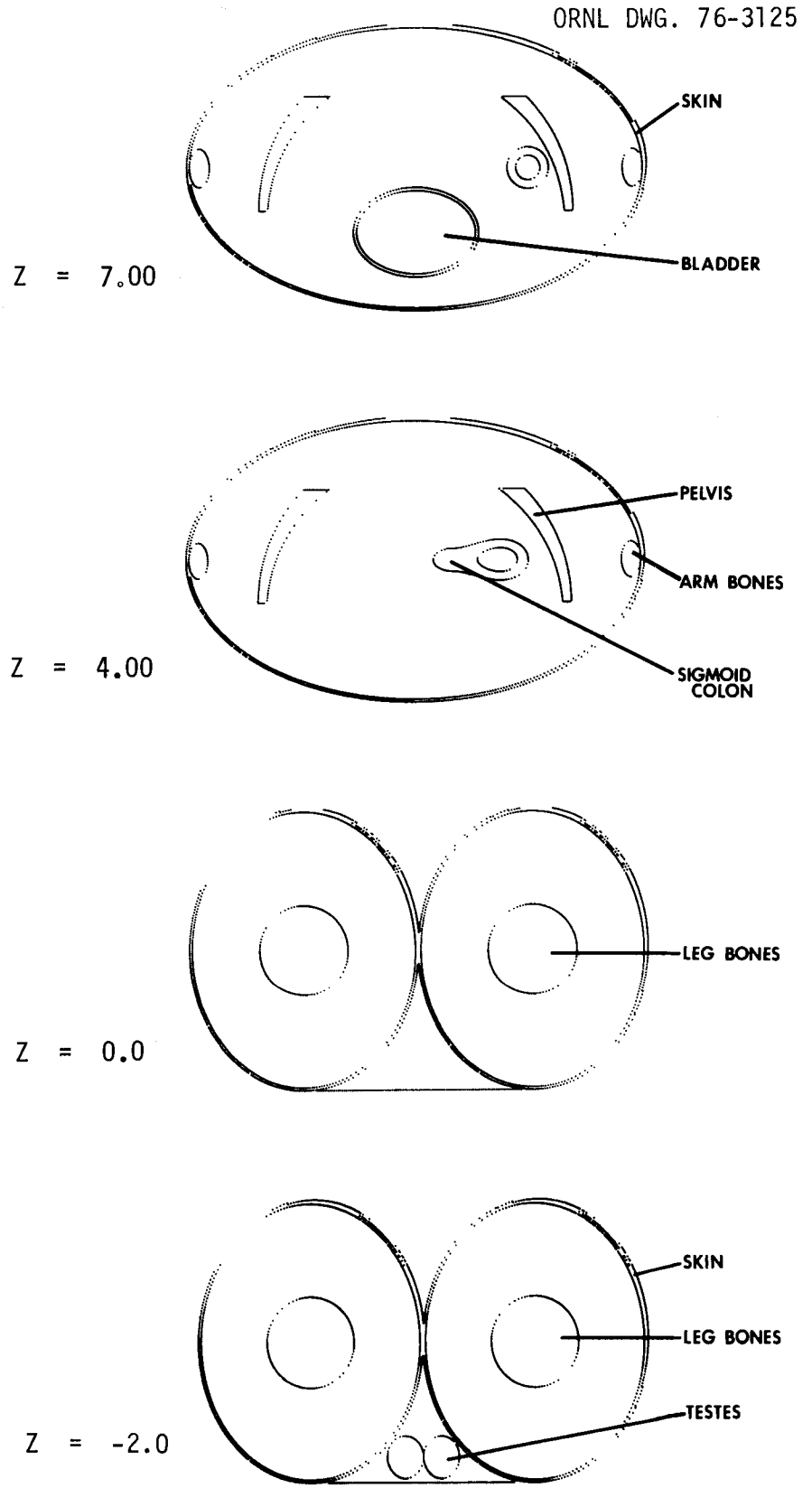

Fig. B6. Lateral (XY) planes at Z = 7, 4, 0, and -2 shown from top to bottom, respectively.

INTERNAL DISTRIBUTION

1-2. Central Research Library
3. Document Reference Section
4-6. Laboratory Records
7. Laboratory Records, ORNL, RC
8. ORNL Patent Office
9. J. A. Auxier
10. J. S. Cheka
11-15. J. L. Hwang
16. D. G. Jacobs
17. T. D. Jones
18-32. G. D. Kerr
33. J. W. Poston
34. C. R. Richmond
35. R. L. Shoup

EXTERNAL DISTRIBUTION

36-62. Technical Information Center, Townsite
63. Research and Technical Support Division, ORO, USERDA
64. L. R. Allen, Radiation Effects Research Foundation, 5-2 Hijiyama Koen, Hiroshima 730, Japan
65. G. W. Beebe, National Academy of Sciences, Washington, DC 20418
66. H. D. Bruner, USERDA, Washington, DC 20545
67. W. W. Burr, Jr., USERDA, Washington, DC 20545
68. R. L. Butenhoff, USERDA, Washington, DC 20545
69. S. C. Finch, Radiation Effects Research Foundation, 5-2 Hijiyama Koen, Hiroshima 730, Japan
70. Tadashi Hashizume, National Institute of Radiological Sciences, Chiba-SHI, 280, Japan
71. Seymour Jablon, National Academy of Sciences, Washington, DC 20418
72-76. R. M. Jones, Apt. 12, 302 Allegheny Street, Blacksburg, VA 24061
77. Sadahisa Kawamoto, Radiation Effects Research Foundation, 164 Sakurababamachi, Nagasaki, 850 Japan
78. T. J. Kennedy, Jr., National Academy of Sciences, Washington, DC 20418
79. J. L. Liverman, USERDA, Washington, DC 20545
80. Sidney Marks, USERDA, Washington, DC 20545
81-90. I. M. Moriyama, Radiation Effects Research Foundation, 5-2 Hijiyama Koen, Hiroshima 730, Japan
91. W. J. Russell, Radiation Effects Research Foundation, 5-2 Hijiyama Koen, Hiroshima 730, Japan
92. Kenji Takeshita, Research Institute for Nuclear Medicine and Biology, Hiroshima University, Hiroshima 734, Japan
93. R. W. Wood, USERDA, Washington, DC 20545
94. Hisao Yamashita, Radiation Effects Research Foundation, 5-2 Hijiyama Koen, Hiroshima 730, Japan