OAK RIDGE NATIONAL LABORATORY LIBRARIES

3 4456 0569804 6

ORNL/NUREG/TM-4

y 127

Correlation of Radioactive Waste Treatment Costs and the Environmental Impact of Waste Effluents in the Nuclear Fuel Cycle—Reprocessing of High-Temperature Gas-Cooled Reactor Fuel Containing U-233 and Thorium

W. Davis, Jr.
R. E. Blanco
B. C. Finney
G. S. Hill
R. E. Moore
J. P. Witherspoon

OAK RIDGE NATIONAL LABORATORY
CENTRAL RESEARCH LIBRARY
DOCUMENT COLLECTION
LIBRARY LOAN COPY
DO NOT TRANSFER TO ANOTHER PERSON
If you wish someone else to see this document, send in name with document and the library will arrange a loan.

UCN-7969
(3 3-67)

OAK RIDGE NATIONAL LABORATORY
OPERATED BY UNION CARBIDE CORPORATION FOR THE ENERGY RESEARCH AND DEVELOPMENT ADMINISTRATION

Printed in the United States of America. Available from
National Technical Information Service
U.S. Department of Commerce
5285 Port Royal Road, Springfield, Virginia 22161
Price: Printed Copy $7.50; Microfiche $2.25

This report was prepared as an account of work sponsored by the United States Government. Neither the United States nor the Energy Research and Development Administration/United States Nuclear Regulatory Commission, nor any of their employees, nor any of their contractors, subcontractors, or their employees, makes any warranty, express or implied, or assumes any legal liability or responsibility for the accuracy, completeness or usefulness of any information, apparatus, product or process disclosed, or represents that its use would not infringe privately owned rights.

ORNL/NUREG/TM-4
Distribution Category UC-11

Contract No. W-7405-eng-26

CHEMICAL TECHNOLOGY DIVISION

Funded by Nuclear Regulatory Commission,
Office of Standards Development

CORRELATION OF RADIOACTIVE WASTE TREATMENT COSTS AND THE ENVIRONMENTAL IMPACT OF WASTE EFFLUENTS IN THE NUCLEAR FUEL CYCLE – REPROCESSING OF HIGH-TEMPERATURE GAS-COOLED REACTOR FUEL CONTAINING U-233 AND THORIUM

W. Davis, Jr.
R. E. Blanco
B. C. Finney
G. S. Hill*
R. E. Moore*
J. P. Witherspoon*

Project Director: R. E. Blanco

May 1976

*Environmental Sciences Division

OAK RIDGE NATIONAL LABORATORY
Oak Ridge, Tennessee 37830
operated by
UNION CARBIDE CORPORATION
for the
ENERGY RESEARCH AND DEVELOPMENT ADMINISTRATION

CONTENTS

Abstract 1

1.0 Summary and Conclusions 1
1.1 Acknowledgements 4

2.0 Introduction 5
2.1 References 6

3.0 Objectives and Assumptions 7
3.1 Objectives 7
3.2 Selection of the Model Plant 7
3.3 Management of Radioactive Wastes 8
3.4 Cost Parameters 9
3.5 Equipment Operation 10
3.6 Plant Siting 10
3.7 Radiological Impact 10
3.8 References 11

4.0 Source Term for Radioactive Releases 12
4.1 Origin of Radioactive Wastes at Reprocessing Plants 12
4.2 Composition and Amount of Radioactive Material Entering the Model Plant 17
4.2.1 Source Terms for Radioactive Nuclides with Precursors Present 18
4.3 Description of Waste Treatment Methods 21
4.3.1 Filtration 21
4.3.2 Evaporation 23
4.3.3 Adsorption on Silver Zeolites 24
4.3.4 Adsorption on Other Metal Zeolites 26
4.3.5 Iodine Evolution 26
4.3.6 Mercuric Nitrate – Nitric Acid Scrubber 27
4.3.7 Iodox 28
4.3.8 Tritium Retention 29
4.3.9 KALC 30
4.3.10 Caustic Scrubbers 31
4.3.11 Adsorption on Charcoal or Macroreticular Resins 32
4.3.12 Conversion of Carbon Dioxide to Calcium Carbonate 32
4.4 Selection of Case Studies 33
4.5 Descriptions of Case Studies and Calculation of Source Terms 34
4.5.1 Case 1 34
4.5.2 Case 2a 47
4.5.3 Case 2b 47

4.5.4 Case 2c 48
4.5.5 Case 2d 49
4.5.6 Case 3 50
4.5.7 Case 4 50
4.5.8 Case 5 51
4.5.9 Case 6 52
4.5.10 Case 7 52
4.6 References 53

5.0 Miscellaneous Radioactive and Nonradioactive Wastes 64
5.1 Solid Radioactive Wastes 64
5.2 Liquid Wastes 65
5.3 Chemical and Sanitary Wastes 66
5.4 Nonradioactive Gaseous Effluents 66
5.5 References 67

6.0 Costs for Radwaste Treatment 68
6.1 Capital Cost 68
6.1.1 Direct Costs 68
6.1.2 Indirect Costs 69
6.2 Annual Fixed Charges and Operating Costs 69
6.3 Installed Equipment Costs 70
6.4 References 70

7.0 Environmental Impact 71
7.1 Meteorology 72
7.2 Population 73
7.3 Radiation Doses from Airborne Effluents 74
7.3.1 Individual and Population Doses from Airborne Effluents 74
7.3.2 Doses to Organs of Individuals from Airborne Effluents 75
7.4 Post-Operational Exposures from Long-Lived Radionuclides Released into the Environment from an HTGR Fuel Reprocessing Plant 76
7.4.1 Post-Operational Source Term 77
7.4.2 Post-Operational Pathways of Exposure 77
7.4.3 Estimates of Post-Operational Doses 79
7.5 Effect of Buoyancy of Hot Stack Gases on Plume Rise and Doses 80
7.6 Nocturnal Versus Daytime Release of Carbon Dioxide 80
7.7 References 80

8.0 Correlation of Environmental Impact with Cost of Waste Treatment 83
8.1 Comparison of Radwaste Treatment Costs with Radiological Dose 83
8.2 Comparison of Radwaste Treatment Costs with Fuel Reprocessing

Costs, Power Costs, and Total Capital Investment 86
8.3 Reference 86

Tables 87

Figures 133

Appendix A. Preparation of Cost Estimates 153

LIST OF TABLES

Table 4.1 Relative inhalation hazard for radionuclides in the fuel charged to the HTGR fuel reprocessing plant 87

Table 4.2 Heavy metals charged to and discharged from the reference 1000-MW(e) HTGR 88

Table 4.3 Heavy metals charged to and discharged from the reference 1000-MW(e) HTGR 89

Table 4.4 Source terms for the model HTGR fuel reprocessing plant 90

Table 4.5 Estimated concentrations of or purity specifications for chemical elements in HTGR graphite, thorium, and uranium 91

Table 4.6 Activation products from potential impurities in graphite at the 1-ppm (by weight) concentration level 93

Table 4.7 Heavy-metal charge compositions used in ORIGEN calculations for the reference 1000-MW(e) HTGR 99

Table 4.8 Calculated steady-state ^{232}U content of the 23R stream charge for various quantities of ^{230}Th in the thorium 100

Table 4.9 Mass flow rates through the reference 450-MTHM/year HTGR fuel reprocessing plant 101

Table 4.10 Summary of variables for model HTGR fuel reprocessing plant gas and liquid radwaste treatment systems 103

Table 4.11 Analysis of iodine-removal cases 104

Table 4.12 Liquid and gaseous effluent operating experience at the NFS fuel processing plant 105

Table 4.13 Observed and expected nuclide release fractions 106

Table 5.1 Solid radioactive waste 107

Table 5.2 Sewage discharged 108

Table 5.3 Estimated average nonradioactive gaseous effluents 109

Table 6.1 Estimated annual costs, reprocessing costs, and contributions to power costs for the 450-MTHM/year model fuel reprocessing plant and radwaste treatment cases 110

Table 6.2 Estimated incremental costs and amounts of radioactive materials released in the airborne effluent discharged from the 100-m stack for the radwaste treatment cases 111

Table 6.3 Installed costs of equipment for model fuel reprocessing plant radwaste treatment Cases 2a-7 112

Table 7.1 Latitude-longitude coordinates used to derive data sets for population distribution 113

Table 7.2 Representative population distribution at successive distances for midwestern site 114

Table 7.3 Representative population distribution at successive distances for coastal plain site 115

Table 7.4 Maximum dose committed to individuals from airborne effluents from one year's operation of the model HTGR fuel reprocessing plant 116

Table 7.5 Summary of annual doses to the population from airborne effluents from one year's operation of the model HTGR fuel reprocessing plant 117

Table 7.6 Contribution of exposure modes to total-body dose from the airborne effluents of the model HTGR fuel reprocessing plant 118

Table 7.7 Contribution of principal radionuclides to total-body and organ doses to individuals residing at 1.5 miles from the model HTGR fuel reprocessing plant 119

Table 7.7(a) Contribution of principal radionuclides to the population total-body and organ doses of the midwestern site out to a distance of 55 miles from the model HTGR fuel reprocessing plant 120

Table 7.7(b) Contribution of principal radionuclides to the total-body and organ doses of the southeastern coastal site out to a distance of 55 miles from the model HTGR fuel reprocessing plant 121

Table 7.8 Percent contribution by pathway to adult maximum total-body dose from airborne effluents from the model HTGR fuel reprocessing plant 122

Table 7.9 Percent contribution to the total organ dose of inhaled and ingested radionuclides from the airborne effluents from the model HTGR fuel reprocessing plant 123

Table 7.10 Curies of long-lived radionuclides released during the 30-year life of the model HTGR fuel reprocessing plant 124

Table 7.11 Contributions of radionuclides and exposure modes to the annual total-body dose to individuals from the time of cessation of the HTGR fuel reprocessing plant operation until significant decay of all radionuclides occurs 125

Table 7.12 Annual dose to individuals (resulting from radionuclides released during the operating life of the model HTGR fuel reprocessing plant) from the time of cessation of plant operation until significant decay of all radionuclides occurs 126

Table 7.13 Annual dose to the population (resulting from radionuclides released from the model reprocessing plant) from the time of cessation of plant operation until significant decay of all radionuclides occurs 127

Table 7.14 Effect of buoyancy of hot stack gases on plume rise and doses from carbon-14 at 1.5 miles from model HTGR fuel reprocessing plant 128

Table 8.1 Cost/benefit analysis for model HTGR fuel reprocessing plant at the midwestern site 129

Table 8.2 Cost/benefit analysis for model HTGR fuel reprocessing plant at the east-coastal site 130

Table 8.3 Cumulative annual cost increments, dose decrements, and cost/benefits for additional radwaste treatments at the model HTGR fuel reprocessing plant at the midwestern site 131

Table 8.4 Cumulative annual cost increments, dose decrements, and cost/benefits for additional radwaste treatments at the model HTGR fuel reprocessing plant at the east-coastal site 132

Table A-1 Summary of costs (dollars) for the radwaste treatment processing methods for the retention of iodine, krypton-85, particulates, tritium, and carbon-14 that are used in the HTGR fuel reprocessing ALARA study 160

Table A-2 Summary of costs (dollars) for the model HTGR reprocessing plant 161

Table A-3 Equipment list and cost for radwaste treatment Case 2a - ion exchange 162

Table A-4 Equipment list and cost for radwaste treatment Case 2b - mercury recycle, iodine evolution, dissolver off-gas $Hg(NO_3)_2$-HNO_3 scrubber, and ion exchange 163

Table A-5 Equipment list and cost for radwaste treatment Case 2c - Iodox, iodine evolution, and ion exchange 164

Table A-6 Equipment list and cost for radwaste treatment Case 2d - CdZeO absorption, iodine evolution, and ion exchange 165

Table A-7 Equipment and material list and cost for radwaste treatment Case 3 - sand filter 166

Table A-8 Equipment list and cost of radwaste treatment Case 4 - tritium bake-out 167

Table A-9 Equipment list and cost for radwaste treatment Case 5 - KALC 168

Table A-10 Equipment list and cost for radwaste treatment Case 6 - conversion of CO_2 to $CaCO_3$ and KALC 169

LIST OF FIGURES

Fig. 3.1 Summary diagram of fuel flow in the HTGR cycle 133

Fig. 4.1 Plan view of fluidized-bed burner canyon, the hopper canyon, identification and sorting (I and S) canyon, the equipment decontamination and maintenance cell(s), and the damaged fuel block burner cell. From Snider and Watkin 134

Fig. 4.2 Elevation view of the fluidized-bed burner showing the relationship of the identification and sorting (I and S) canyon, the blower canyon, and personnel corridors. From Snider and Watkin 135

Fig. 4.3 Elevation view through the hopper canyon. From Snider and Watkin 136

Fig. 4.4 Nuclear reactions and radioactive decay in the thorium-uranium cycle 137

Fig. 4.5 Model fuel reprocessing plant: Case 1 - Base Case 138

Fig. 4.6 Model fuel reprocessing plant: Case 2a - reduction in release of iodine in liquid effluent using ion exchange 139

Fig. 4.7 Model fuel reprocessing plant: Case 2b - reduction in release of iodine in liquid and gasborne effluents using iodine evolution, two $Hg(NO_3)_2$ scrubbers, and ion exchange 140

Fig. 4.8 Model fuel reprocessing plant: Case 2c - reduction in release of iodine in liquid and gasborne effluents using iodine evolution, the Iodox process, and ion exchange 141

Fig. 4.9 Model fuel reprocessing plant: Case 2d - reduction in release of iodine in liquid and gasborne effluents using iodine evolution, cadmium zeolite sorbers, and ion exchange 142

Fig. 4.10 Model fuel reprocessing plant: Case 3 - reduction in release of particulates in gasborne effluents using a sand filter 143

Fig. 4.11 Model fuel reprocessing plant: Case 4 - reduction in release of tritium in gasborne effluents using bakeout and molecular sieve 144

Fig. 4.12 Model fuel reprocessing plant: Case 5 - reduction in release of noble gases and other components in gasborne effluents using KALC 145

Fig. 4.13 Model fuel reprocessing plant: Case 6 - reduction in release of carbon-14 and other components in gasborne effluents using KALC and conversion of carbon dioxide to calcium carbonate 146

Fig. 4.14 Model fuel reprocessing plant: Case 7 - reduction in all releases using a composite system 147

Fig. 4.15 Example of iodine sorption in off-gas treatment and liquid waste systems 148

Fig. 7.1 Pathways for external and internal exposure of man 149

Fig. 8.1 Cumulative annual cost for reduction of total-body dose from the model HTGR fuel reprocessing plant 150

Fig. 8.2 Cumulative annual cost for reduction of thyroid dose from the model HTGR fuel reprocessing plant 151

Fig. A-1 Equipment flowsheet for model HTGR nuclear fuel reprocessing plant radwaste treatment Cases 2b, 2c, 2d, and 7 - reduction in release of iodine - iodine evolution 170

Fig. A-2 Equipment flowsheet for model HTGR nuclear fuel reprocessing plant radwaste treatment Case 2b - reduction in release of iodine - mercury recycle 171

Fig. A-3 Equipment flowsheet for model HTGR nuclear fuel reprocessing plant radwaste treatment Case 2c - reduction in release of iodine - Iodox 172

Fig. A-4 Equipment flowsheet for model HTGR nuclear fuel reprocessing plant radwaste treatment Case 2d - reduction in release of iodine - iodine absorption on CdZeO 173

Fig. A-5 Equipment flowsheet for model HTGR nuclear fuel reprocessing plant radwaste treatment Cases 3 and 7 - reduction in release of particulates - sand filter 174

Fig. A-6 Schematic diagram of batch tritium bake-out equipment for model HTGR nuclear fuel reprocessing plant radwaste treatment Cases 4 and 7 - reduction in the release of tritium 175

Fig. A-7 Equipment flowsheet for model HTGR nuclear fuel reprocessing plant radwaste treatment Cases 6 and 7 - reduction in the release of carbon-14 - conversion of CO_2 to $CaCO_3$ 176

CORRELATION OF RADIOACTIVE WASTE TREATMENT COSTS AND THE ENVIRONMENTAL IMPACT OF WASTE EFFLUENTS IN THE NUCLEAR FUEL CYCLE – REPROCESSING OF HIGH-TEMPERATURE GAS-COOLED REACTOR FUEL CONTAINING U-233 AND THORIUM

W. Davis, Jr., R. E. Blanco, B. C. Finney, G. S. Hill,
R. E. Moore, and J. P. Witherspoon

ABSTRACT

A cost/benefit study was made to determine the cost and effectiveness of various radioactive waste (radwaste) treatment systems for decreasing the release of radioactive materials from a model high-temperature gas-cooled reactor (HTGR) fuel reprocessing plant and to determine the radiological impact (dose commitment) of the released materials on the environment. The study is designed to assist the U.S. Nuclear Regulatory Commission in defining the term "as low as reasonably achievable" as it applies to this nuclear facility. The base case is representative of conceptual, developing technology of head-end graphite-burning operations and of extensions of solvent-extraction technology of current designs for light-water-reactor (LWR) fuel reprocessing plants. The model plant has an annual capacity of 450 metric tons of heavy metal (MTHM, where heavy metal is uranium plus thorium), as charged to about fifty 1000-MW(e) HTGRs. Additional radwaste treatment systems are added to the base-case plant in a series of case studies to decrease the amounts of radioactive materials released and to reduce the radiological dose commitment to the population in the surrounding area. The capital and annual costs for the added waste treatment operations and the corresponding reductions in dose commitments are calculated for each case. In the final analysis, the cost/benefit of each case, calculated as additional cost of radwaste system divided by the reduction in dose commitment, is tabulated or the dose commitment is plotted with cost as the variable. The status of each of the radwaste treatment methods used in the case studies is discussed. Much of the technology used in the advanced cases is in an early stage of development and is not suitable for immediate use in detailed designs of an HTGR fuel reprocessing plant. However, the radwaste treatment methods are believed to be reducible to practice. The methodology used in estimating the costs is presented in Appendix A.

1.0 SUMMARY AND CONCLUSIONS

A study was made to determine the cost and effectiveness of radioactive waste (radwaste) treatment systems for decreasing the release of radioactive materials from a model high-temperature gas-cooled reactor (HTGR) nuclear fuel reprocessing plant and to determine

the radiological impact (dose commitment) of the released materials on the environment. The model plant, based on conceptual, developing technology of head-end graphite-burning operations and on extensions of solvent-extraction technology of current designs for light-water-reactor (LWR) fuel reprocessing plants, has an annual capacity of 450 metric tons of heavy metal (MTHM, where metal is uranium plus thorium), as charged to reactors. The fuel is irradiated to an average burnup of about 95,000 MWd/MTHM, at an annual average power of 64 MW/MTHM (80 MW/MTHM when operating and an on-stream factor of 0.8), and cooled 160 days before reprocessing. The gasborne radwastes are treated and released. These releases include all of the ^{85}Kr, tritium (in water vapor), and ^{14}C (in carbon dioxide, from graphite burning). The high-level liquid radwastes and miscellaneous, low-level, liquid radwastes are stored in tanks. Liquid radioactive waste is not intentionally released to the environment. The two purified products, one containing bred or unburned ^{233}U and the other containing unburned ^{235}U, are transferred to an adjacent fuel refabrication plant. The residual, fertile thorium is recovered as an impure product and stored for 20 to 40 years, to permit decay of ^{228}Th and its decay products, before being reused. Options for solidification of the wastes and for solidification of the uranium products (for shipment to a fuel-refabrication plant if this plant were not located adjacently) can be added to the base plant. However, these options are not included in the cost assigned to base Case 1 or in the succeeding cases. The radiological impact of the model plant is evaluated at midwestern and southeastern coastal sites.

Several conceptual cases and their corresponding flowsheets were prepared for treating the liquid and gasborne streams in the model plant. Case 1 is the base case, representing the lowest cost and currently-conceived treatment technology. In each succeeding case, equipment is added to accomplish a specific objective. Cases 2 through 7 represent the use of advanced technology that probably can be "reduced-to-practice." Case 7 represents an advanced design concept where several additional treatment systems are used simultaneously. Some radwaste treatment processes are in the early stage of development and are not suitable for inclusion in the design of the base case. The efficiency of a treatment system or plant for retention of radioactive material is expressed as a decontamination factor (DF), i.e., the ratio of the amount of material entering a plant to that released to the environment. Table 4.10 presents a summary of the general plan of the study, including the objectives, DFs, and treatment systems selected for each case.

The annual amounts of radioactive materials released (the source term), the capital and annual costs for radwaste treatment, the unit fuel reprocessing costs for radwaste treatment ($/kg HM), the contribution to power costs, and the radiological impact (50-year dose commitment) to the environment are estimated for each case. The 50-year dose commitments (person-rem) for each case were estimated for (1) the population annual average total-body, GI tract, thyroid, and bone out to 55 miles from the plant; (2) the incremental population annual average dose (person-rem) out to 55 miles, which represents the difference in dose between Case 1 and a given case; and (3) the adult maximum annual total-body dose (mrem) at a distance of 1.5 miles from the plant stack. The costs and doses are summarized in Tables 6.1, 7.4, 7.5, 8.1, and 8.2. Additional correlations are presented in Sect. 8.0. The costs are the

estimated amounts required for each case beyond that required for the base Case 1, in effect, the incremental costs. The difference in dose commitment at the two sites is the result of differences in meteorology and population density. Internal exposure to radiation through inhalation and ingestion of radionuclides accounts for about 91% of the total-body dose to individuals and the population living around a nuclear fuel reprocessing plant, Table 7.6. Conservative assumptions are made to obtain estimates of maximum doses. For example, ingestion doses are calculated on the basis that an individual resides 100% of the time at the reference location and that all of his food is produced at the reference location. This situation is not impossible, but extremely unlikely. Thus, population and individual dose estimates calculated by these methods are higher than actually expected. The fuel refabrication plant of the combined reprocessing-refabrication operations contributes less than 1% of the population total-body or organ dose commitments of the reprocessing plant.

Total-Body Dose. – The principal radionuclides that contribute to the total-body dose in the base case (Sect. 7) are ^{14}C, tritium (^{3}H), iodines (^{129}I and ^{131}I), cesiums (^{134}Cs and ^{137}Cs), and ^{85}Kr; their contributions are 61.2% (^{14}C), 25.1% (^{3}H), 3.8% (^{129}I), 0.3% (^{131}I), 2.4% (^{134}Cs), 2.5% (^{137}Cs), and 2.9% (^{85}Kr), at a distance out to 55 miles from the 100-meter plant stack. The estimated population annual average total-body dose does not exceed 2360 person-rem at the midwestern site or 700 person-rem at the east-coastal site out to a 55-mile distance, Tables 8.1 and 8.2. Only small reductions (less than 5%) in total-body dose are achieved by decreasing the releases of iodines, cesiums, or particulates (Cases 2a-2d, and 3) since these components contribute only small fractions of the dose. Large dose reductions, Fig. 8.1, are achieved by reducing the releases of ^{14}C (Cases 6 and 7) or of tritium (Cases 4-7). Cost/benefit ratios, at the midwestern site, for the various cases, Table 8.1, range from \$350/person-rem[a] for Case 2a (use of an ion-exchange unit to remove most of the iodine from the aqueous stream flowing from the Iodine Removal Partial Evaporator to the Excess Water Vaporizer) and \$1100/person-rem for Case 4 (involving tritium bakeout and sorption of water on molecular sieve) to \$5400/person-rem for Case 7 (involving a combination of radwaste treatments designed to reduce all releases to values 10^{-2}, or less, of those of Case 1). Corresponding cost/benefit ratios at the east-coastal site are \$1,750, \$3,700, and \$19,000/person-rem (Table 8.2).

Thyroid Dose. – The annual costs of reducing the population annual average thyroid dose (10,400 person-rem at the midwestern site and 3,500 person-rem at the east-coastal site) out to a distance of 55 miles from the plant stack are shown in Tables 8.1-8.4 and in Fig. 8.2. Iodines-129 and -131 are the major, but not sole, contributors to thyroid doses [Tables 7.7, 7.7(a), and 77(b)], and Cases 2a-2d are designed to trap iodine to produce large reductions in this dose. Case 2a involves adding an ion exchange unit to sorb iodine in the liquid waste ahead of the Excess Water Vaporizer (Fig. 4.5). The annual cost of this unit is estimated, Table 6.1, to be \$35,000. The thyroid dose is reduced in this case (Table 8.1) to 16-17% of the dose of Case 1, corresponding to a cost/benefit ratio of \$4/person-thyroid-rem at the midwestern site and \$12 at the east-coastal site. Further reductions in thyroid dose due to iodine trapping are achieved in Cases 2b-2d at cost/benefit ratios of \$43-53/person-thyroid-rem at the midwestern site and \$124-154/person-thyroid-rem at the east-coastal site.

Cases 2a-2d remove iodines to such large degrees that carbon-14 and tritium become the dominant causes of thyroid dose. For example, carbon-14 contributes about 44% and tritium

[a]Costs are given in terms of 1973 dollars to maintain consistency with previous reports in this series (refs. 2.2 to 2.5). Factors are provided to convert to 1975 dollars (Sect. 6.0).

contributes about 41% of the residual thyroid doses in Case 2c, while the iodines contribute only 0.1% of the dose since 99.99% of the total iodine has been retained in the plant. Significant reduction in thyroid dose beyond that achieved in Case 2a is achieved by tritium bakeout and sorption of tritiated water on molecular sieves, that is, by combining Cases 2a and 4, Tables 8.3 and 8.4 and Fig. 8.2. Other combinations of systems for trapping tritium, iodines, and ^{14}C in Cases 5, 6, and 7 achieve a 90 to 99% reduction in the thyroid dose.

Bone Dose. – Carbon-14, tritium, and ^{90}Sr contribute 57.2%, 17.6%, and 10.7%, respectively, to the bone dose. Tritium, as tritiated water, is removed in Case 4 at a cost/benefit of \$1100/person-bone-rem; ^{14}C and ^{90}Sr are removed in Case 6 at a cost/benefit of \$3500/person-bone-rem; and ^{90}Sr is removed in Case 3 at a cost/benefit of \$800/person-bone-rem at the midwestern site.

GI Tract Dose. – Tritium is the dominant contributor (44.7%) to the dose in the gastrointestinal tract; also important are ^{14}C (27.5%) and ^{106}Ru (11.7%). Tritium is removed by a factor of 100 in Case 4 at a cost/benefit of \$1100/person-GI tract-rem at the midwestern site, Table 8.1.

Lung Dose. – The major contributors to lung dose are ^{14}C (39.5%), tritium (38.1%), ^{85}Kr (10.9%), ^{129}I (3.3%), and ^{137}Cs (3.2%) in the base Case 1. Radon-220 (and the associated daughter ^{212}Pb) contributes only 1.6%, corresponding to 26 person-rem/yr. The low dose from ^{220}Rn is achieved by delaying the release of ^{220}Rn from the plant for 20 minutes to allow for radioactive decay (the half-life of ^{220}Rn is 55.6 s). This delay reduces the amount of ^{220}Rn released by a factor of 10^6. These results indicate that controlling the release of ^{220}Rn is mandatory in reprocessing HTGR fuel and that provision for this control must be incorporated in the base-case design [Sects. 4.2.1 and Tables 7.7, 7.7(a), and 7.7(b)].

Cost Comparisons. – Radwaste treatment costs can be compared with fuel reprocessing costs, power costs, and total capital investment in establishing the relative importance of alternative cost factors in a cost/benefit analysis.

The annual reprocessing cost in the base Case 1 is \$324/kg (U + Th) (Table 6.1). In Cases 2 through 7, the costs for additional radwaste treatment systems increase by \$0.08 to \$28.77/kg (U + Th), corresponding to increases from about 0.025 to 8.9% of the base case reprocessing cost.

The increased capital costs for Cases 2a through 7 range from \$0.092 million to \$18.685 million, or up to about 4.7% of the \$400 million (1973 dollars) capital cost of the base plant. The annual costs for Cases 2a through 7 range from about \$0.035 million to \$12.945 million, which is equivalent to contributions to power cost of 9.6×10^{-5} and 3.55×10^{-2} mill/kWhr, respectively (Sect. 6.0, Table 6.1). All of these values are less than about 1% of an estimated total generation cost of 7 to 10 mills/kWhr.

1.1 Acknowledgements

The authors wish to thank J. W. Snider and V. C. A. Vaughen for their help in many conversations during the preparation of this report.

2.0 INTRODUCTION

This study was performed to determine the cost and the effectiveness of alternative or additional radioactive waste treatment systems that could be used at High-Temperature Gas-Cooled Reactor (HTGR) nuclear fuel reprocessing plants to decrease the amounts of radioactive and nonradioactive materials released to the environment. A second objective is to determine the impact of the potential radioactive releases on the environment. The effectiveness of the alternative radioactive waste treatment systems that are considered is measured by comparing the amounts of radioactive materials released by the various systems and the impact of these releases on the environment.

The "source term" is the estimate of the quantities of the various radioactive nuclides that will be released to the environment, normally expressed in curies per year, calculated at the point of release. In the present study this point of release is at the top of a 100-m stack.

The purpose of fuel reprocessing will be to purify and recover the valuable, unused thorium and uranium for reuse in new nuclear fuels. The radioactive waste materials, fission products, and transuranium nuclides will be separated from the thorium and uranium and stored in liquid concentrates in underground tanks. Ultimately, these wastes will be solidified, sealed in stainless steel storage containers, and, after an interim storage period, would be shipped to a federal repository for permanent storage or disposal in accord with existing federal regulations.[1] The recovered uranyl nitrate will be transferred to an adjacent fuel refabrication plant for recycle in new fuels. A small fraction of the radioactive materials will be vaporized as gases or aerosols during the reprocessing operations, and treatment systems will be used to minimize the release of these materials in the gaseous effluent from the plant. Liquid effluent treatment systems will be used to prevent any intentional release of radioactive liquids from the plant.

A model plant which is based on conceptual, developing technology of head-end graphite-burning operations and on extensions of solvent extraction technology of current designs for light-water-reactor (LWR) fuel reprocessing plants is used as the base case for this study. However, the model plant does not represent the design of any particular planned facility. The radiological impact of the plant is considered at two typical sites, i.e., a midwestern and a southeastern coastal plain. Increasingly efficient radioactive waste treatment systems are added to the "base" plant. The additional cost of each system and the reduction of the environmental impact that each produces are used as the basis of a cost/benefit analysis. It was not feasible to include all possible variations of base plant and radioactive waste treatment systems, but sufficient information is provided in this study so that the costs and impacts can be estimated for other radioactive waste treatment systems by extrapolation or interpolation of the data provided. The base case illustrates the important features of developing technology pertaining to burning of graphite, separation of particles of different sizes and densities, and of technology currently available in LWR fuel reprocessing plants. The advanced cases use technology ranging from that which is presently being developed to the foreseeable limits of available technology on the basis of expected typical operations over the last two decades of the 20th century.

Some of the technology used in the advanced cases is in an early stage of development. However, it is necessary to use this technology in the study to predict long-range cost/benefit relationships. In most cases, alternative technology to accomplish a given objective is nonexistent. It is assumed that the advanced technology used in the study can be "reduced to practice". The bases for this assumption are presented in detail in Sect. 4.3.

This report is one of a series of studies on the nuclear fuel cycle. Other reports in this series are concerned with reprocessing LWR fuels,[2] milling uranium ores,[3] fabricating LWR fuels containing enriched uranium,[4] and fabricating LWR fuels containing plutonium.[5]

2.1 References

1. Code of Federal Regulations, Title 10, Part 50, Appendix F.

2. B. C. Finney, R. E. Blanco, R. C. Dahlman, G.S. Hill, F. G. Kitts, R. E. Moore and J. P. Witherspoon, *Correlation of Radioactive Waste Treatment Costs and the Environmental Impact of Waste Effluents in the Nuclear Fuel Cycle– Reprocessing Light-Water Reactor Fuel*, ORNL/NUREG/TM-6 (in press).

3. M. B. Sears, R. E. Blanco, R. C. Dahlman, G. S. Hill, A. D. Ryon, and J. P. Witherspoon, *Correlation of Radioactive Waste Treatment Costs and the Environmental Impact of Waste Effluents in the Nuclear Fuel Cycle for Use in Establishing "As Low As Practicable" Guides - Milling of Uranium Ores*, ORNL-TM-4903, Vols. 1 and 2 (May 1975).

4. W. H. Pechin, R. E. Blanco, R. C. Dahlman, B. C. Finney, R. B. Lindauer, and J. P. Witherspoon, *Correlation of Radioactive Waste Treatment Costs and the Environmental Impact of Waste Effluents in the Nuclear Fuel Cycle for Use in Establishing "As Low As Practicable" Guides - Fabrication of Light-Water Reactor Fuel from Enriched Uranium Dioxide*, ORNL-TM-4902 (May 1975).

5. W. S. Groenier, R. E. Blanco, R. C. Dahlman, B. C. Finney, A. H. Kibbey, and J. P. Witherspoon, *Correlation of Radioactive Waste Treatment Costs and the Environmental Impact of Waste Effluents in the Nuclear Fuel Cycle for Use in Establishing "As Low As Practicable" Guides - Fabrication of Light-Water Reactor Fuels Containing Plutonium*, ORNL-TM-4904 (May 1975).

3.0 OBJECTIVES AND ASSUMPTIONS

3.1 Objectives

The objectives of this study are: (1) to determine the cost (in dollars) that would be required to reduce the amount of radioactive materials released to the environment from HTGR fuel reprocessing plants, using currently-available or conceived treatment systems, to very low levels using advanced, complex treatment systems; and (2) to evaluate the radiological impact of the radioactive effluents from these conceptual installations. The definition of the incremental value of additional radioactive waste treatment equipment is an important part of the basic objective and is emphasized in the study. Generally, these values will not change very much with the size of the plant. For example, the amount of waste effluent to be treated generally increases with the plant size and, thus, larger treatment systems are required. However, the fraction released is essentially the same for large and small systems. Thus, a larger total amount of radioactive material is released from the larger unit when operating on the same type, but larger volume, of radioactive effluent. The calculated total amounts of radioactive materials released are also defined, but are less important in this study, since they are expected to vary with the plant size. Hence, the incremental and absolute values derived in this study for a single size of conceptual plant can be extrapolated to larger or smaller plants. The volumes of radioactive wastes were selected on the assumption that a careful internal waste management program will be followed.

Estimates are made of the average radioactive and nonradioactive releases and the cost of radioactive waste treatment operations over the lifetime of the reprocessing plant. In a similar study for nuclear power reactors,[1] great emphasis was placed on maintaining continuous operation of the power plant. Consequently, the more complex radioactive waste treatment systems contained redundant (parallel) treatment units to ensure continued operation in case one of the units should become inoperable. In the reprocessing-plant study, less emphasis is placed on continuous operation, since the plant could temporarily cease operations in the event that a major radioactive waste treatment unit failed. Only potential releases from normal operations, including anticipated operational occurrences, have been considered in this study.

3.2 Selection of the Model Plant

The model plant selected for the base case (Case 1) contains graphite-burning equipment that is still in the developmental stage[2,3] plus other equipment similar to that in LWR fuel reprocessing plants[4-6] being designed or licensed in 1975. The model plant is assumed to process 450 metric tons of heavy metal per year (MTHM/yr, calculated as metric tons of uranium plus thorium charged to the reactor), irradiated at an average specific power of about 64 MW/MTHM to an exposure of 95,000 MWd/MTHM and decayed a minimum of 160 days before processing. The plant is assumed to operate the equivalent of 300 days/yr at design capacity. The three types of graphite fuel elements, when charged to the reactor, will contain in addition to the fertile ^{232}Th, (1) 93% ^{235}U (the IM elements), (2) uranium recovered from spent

IM elements and repurified for recycle (the 25R elements), or (3) ^{233}U bred from the fertile ^{232}Th (the 23R elements).[a] Fuel elements will be segregated according to group, Fig. 3.1, crushed, and burned to remove the graphite. Both the $^{233}U_3O_8$ and ThO_2 particles from the 23R elements will be dissolved in nitric acid containing fluoride, and processed by means of the Acid-Thorex solvent extraction process. The ThO_2 particles and the silicon carbide-coated UC_2 particles released by burning IM and 25R elements will be separated by mechanical means. The ThO_2 will be dissolved in fluoride-containing nitric acid with particles from the 23R elements and sent to the Acid-Thorex process equipment. UC_2 particles from 25R elements (the 25W stream) will be retired for disposal as waste products or held in storage until a market develops for the contained plutonium or other transuranium elements; UC_2 particles from the IM elements will be crushed, reburned, and the freed U_3O_8 subsequently dissolved in nitric acid for recovery, by the Purex process, of uranium which will be recycled in 25R elements.

The high-level liquid radioactive wastes from these processes will be stored in tanks for 1-5 years, and the miscellaneous low-level liquid radioactive wastes for an indefinite period. Thorium will be stored for 20 to 40 years to allow ^{228}Th to decay. The base-case source term includes removal of thorium and its decay products as contributors to off-gas effluents one year after reprocessing. This can be accomplished by early solidification and encapsulation of thorium in order to alleviate an otherwise increasingly greater caretaker problem due to formation of ^{220}Rn and radiolytic hydrogen. However, the case-by-case analysis does not depend on how this removal of thorium is accomplished. No planned releases of radioactive liquid wastes to the environment will occur. The base case includes encapsulation of retired blocks of reflector graphite in concrete and can also include the options of solidification of the high-level liquid waste or the separation of transuranium elements from these wastes for separate treatment prior to solidification. These options can be included with the base case plant and designed so that no significant increase in the release of radioactive materials occurs relative to the base case. However, as noted in Sect. 3.4, these options are not included in the base-case cost.

3.3 Management of Radioactive Wastes

The most complex flowsheets in this study illustrate very low, but not "zero," release of radionuclides in the gaseous radioactive waste effluents. No planned releases of liquid radioactive effluents from the plant will occur.

---

[a]One fertile and three fissile particle types are planned for use in the HTGR. All thorium will be contained as ThO_2 in the kernels of fertile particles, which will have BISO coatings. The three fissile particles types will contain fresh ^{235}U, or recycle ^{235}U, or bred ^{233}U, as UC_2 in TRISO coatings. BISO and TRISO are acronyms denoting the type of coating. A BISO particle contains an inner kernel of ThO_2 plus two coating layers: a low-density pyrolytic carbon buffer layer and a high-density isotropic pyrolytic carbon layer to retain the fission products. A TRISO particle contains an inner kernel of fissile UC_2 (possibly an oxycarbide) plus three coating layers: a pyrolytic carbon around the kernel to act as a buffer, then a SiC layer, and an outer layer of high-density, isotropic, pyrolytic carbon to retain fission products. Fertile particles will have diameters of 0.820 millimeters (mm), the IM and 25R particles will have diameters of 0.540 mm, and the 23R particles will have diameters of 0.740 mm.[7,8]

Gaseous Effluents. - Gaseous effluents from process vessels and the ventilation air from cell areas will contain radioactive gases (^{14}C in the CO_2, iodine, noble gases, including ^{220}Rn, tritiated water vapor) and particulates or aerosols that contain a spectrum of all of the radionuclides in the process equipment. The gases will be treated so that increasingly large fractions of these materials will be retained in the various case studies. The treated gases will be released through a 100-m-high stack.

Liquid Streams. - Liquid waste streams (excluding cooling water) will be treated so that the dissolved radioactive and nonradioactive solids and a fraction of the water will be retained in the plant. Excess water will not be released as a liquid but will be evaporated and released with the gasborne wastes. At equilibrium and in the absence of any removal mechanism, the amounts of ^{14}C and tritium leaving the plant will equal the amounts entering the plant in the fuel. Process cooling water will be monitored, and treated as necessary, before release to the environs.

The concentrated high-activity radwastes will be stored in tanks for 1-5 years as permitted by government regulation.[9] These wastes will contain >99% of the radioactive materials entering the plant. Optionally, these wastes could be solidified and stored for a period of 10 years after their formation in the reprocessing operation, and subsequently shipped to a government repository. The concentrated miscellaneous low-activity radwastes will be stored in tanks for an indefinite period. These wastes will contain <1% of the radioactive materials and the bulk of the soluble nonradioactive materials. Optionally, these wastes could be solidified as indicated above for the high-level wastes. Costs of shipping these wastes to burial grounds and of their storage are not included in the cost studies.

Solid Wastes. - Solid wastes consisting of rags, clothing, floor sweepings, etc., will be packaged in suitable containers for eventual disposal.

3.4 Cost Parameters

A base case is selected which is similar to a plant being designed (in 1975) to start operating in 1985. The capital and annual costs are then estimated for waste effluent treatment segments added to the base case in a series of case studies. The calculation of these incremental annual costs is a primary objective of the study. They are correlated with the changes in environmental impact for each case study in Sect. 8.0. The estimated costs are based on a new plant using remote maintenance in the highly radioactive head-end operations and direct maintenance for the less radioactive sections of the plant. The capital cost of the base plant, not including the options of solidification of the high-level radioactive waste, the packaging of plutonium as a solid (PuO_2) for storage, or the solidification of recovered thorium, was set at $400,000,000 in 1973 dollars. This is not a precise value since it would vary considerably with the type of facility constructed, i.e., direct maintenance, semi-remote maintenance, or completely remote maintenance (canyon type). This cost is used for a qualitative comparison with the incremental capital costs of the cases studied. Complete details of the cost estimating procedure are given in Sect. 6.0 and Appendix A.

3.5 Equipment Operation

For the purpose of this study, it is assumed that all radioactive wastes will be treated by the radioactive waste-treatment equipment; i.e., wastes will not bypass treatment systems and be discharged. The equipment is adequately sized to ensure high operating flexibility and efficiency factors. For example, if the liquid radioactive waste is not decontaminated to the desired degree in a single evaporation, it may be recycled and reevaporated. This type of design provides extra assurance that radioactive releases will not exceed the calculated design levels.

3.6 Plant Siting

A model plant is located at each of two sites having environments which are characteristic of those at nuclear fuel reprocessing and fuel fabrication facilities presently under construction or modification. Site 1 is situated on a plain in a rural southeastern coastal area adjacent to a continuously flowing stream that empties into an estuary. Cities with moderate populations are established a short distance from the site. Site 2 is situated on a plain in a rural midwestern environment adjacent to a continuously flowing stream which empties into a large river. The survey area contains cities with moderate populations, as well as a large city. Meteorological data for Sites 1 and 2 are derived from first-order weather stations in the southeastern-coastal and midwestern areas of the United States. The population distributions for the sites are determined by averaging the distributions around several nuclear installations in the southeastern and midwestern areas. Site selection is described in detail in Sect. 7.0.

3.7 Radiological Impact

Radiation doses to the population surrounding the model plant are estimated using the procedures that are currently being used in environmental impact statements for light-water-cooled nuclear power stations by the USNRC-Directorate of Regulatory Standards.[1] Pathways for external radiation dose from sources outside the body and for internal dose from sources in the body are considered. Immersion in the gaseous effluents as they are diluted and dispersed leads to external exposure, and inhalation causes internal exposure. The deposition of radioactive particulates on the land surface leads to direct external exposure and to internal exposure by the ingestion of food products through various food chains. Similarly, swimming in waters containing radionuclides can lead to external exposure, whereas the harvest of fish or drinking from the waters can lead to internal exposure. In this study, no radioactive materials are intentionally released in liquid effluents.

The estimated radiation doses to individuals and to the human population are calculated for annular distances out to 55 miles in 22.5^0 sectors using the site parameters listed in Sect. 3.6. Population annual average doses (person-rem), the sum of the doses to all individuals in the population considered, are calculated for the total body and for individual organs. Similar calculations were made of the adult maximum annual total-body and organ doses (mrem). Details of dose models, assumptions, and methods are given in Sect. 7.0.

3.8 References

1. USAEC-Directorate of Regulatory Standards, *Final Environmental Statement Concerning Proposed Rule Making Action: Numerical Guides for Design Objectives and Limiting Conditions for Operation to Meet the Criterion "As Low As Practicable" for Radioactive Material in Light-Water-Cooled Nuclear Power Reactor Effluents*, WASH-1258 (July 1973).

2. *Draft National HTGR Fuel Recycle Development Program Plan, as of August 1974*, ORNL-4702, Rev. 2, prepared by Oak Ridge National Laboratory, General Atomic, and Allied Chemical Corporation.

3. J. W. Snider, *Determinations of Effluents from an HTGR Fuel Reprocessing Plant*, ORNL-TM-4360 (July 1975).

4. Nuclear Fuel Services, Inc., *Safety Analysis - Spent Fuel Reprocessing Plant*, Docket No. 50-201 (1962-1965).

5. Allied-Gulf Nuclear Services, *Barnwell Nuclear Fuel Plant - Environmental Report*, Docket No. 50-332 (November 1971).

6. General Electric Company, *Applicant's Environmental Report*, NEDO-14504 and NEDO-14504-2 (1971).

7. USAEC, *Draft Environmental Statement, HTGR Fuel Refabrication Pilot Plant at Oak Ridge National Laboratory*, WASH-1533 (January 1974).

8. J. W. Roddy, R. E. Blanco, G. S. Hill, R. E. Moore, M. L. Randolph, R. D. Seagren, and J. P. Witherspoon, *Correlation of Radioactive Waste Treatment Costs and the Environmental Impact of Waste Effluents in the Nuclear Fuel Cycle. Part 6. Fabrication of High-Temperature Gas-Cooled Reactor Fuel Containing Uranium-233 and Thorium*, ORNL/NUREG/TM-5 (in press).

9. Code of Federal Regulations, Title 10, Part 50, Appendix F.

4.0 SOURCE TERM FOR RADIOACTIVE RELEASES

4.1 Origin of Radioactive Wastes at Reprocessing Plants

Nuclear reactor fuel elements must be replaced periodically as they begin to suffer from depletion of fissile fuel, accumulation of fission products, and irradiation damage. Typically,[1] the fuel will be replaced after generating an average of 73,000 to 100,000 MWd of heat per ton of initially-contained uranium plus thorium. Each year from typical large high-temperature gas-cooled reactors, of 770- to 1540-MW(e) rating (2000 to 4000 MWt), there will be discharged, on the average, about 8.1 (from a charge of about 8.9) metric tons of heavy metal (MTHM is metric tons of uranium plus thorium) in spent fuel per 1000 MW(e). This will be contained in nearly 1000 blocks of graphite. These spent fuel elements will be sources of heat and intense radioactivity; the radioactive materials will consist of fission products, impurities in graphite, in thorium, and in uranium that will become radioactive from exposure to neutrons in the reactor (activation products), and transuranium elements such as plutonium, americium, and curium that will be formed from neutron capture by thorium and uranium. In this study, the average burnup of the model HTGR core is 95,000 MWd per metric ton of heavy metal (about 8.25 W/cm^3) charged to the reactor and the model plant will process 450 MTHM (as charged) of fuel annually, corresponding to about 50,000 fuel blocks from 50 reactors. It should be noted that the average burnup of 95,000 MWd/MTHM is derived from values ranging from 40,000 MWd per metric ton of thorium to nearly 700,000 MWd per metric ton of uranium originally charged as (93% ^{235}U) enriched uranium particles (the IM stream of Fig. 3.1).

The functions of the HTGR fuel reprocessing plant will be to recover residual uranium and uranium bred from the fertile thorium in pure form suitable for recycle and to isolate retired uranium (the 25W stream, Fig. 3.1), thorium, plutonium, other transuranium elements, and radioactive wastes for storage or disposal. The spent fuel will be transported from the reactor to the reprocessing plant in heavy, shielded casks by truck or rail after a normal period of storage at the reactor site of 100 days, which will allow for decay of greater than 95% of the sources of heat and radioactivity of the fuel. The total storage time before reprocessing is assumed to be 160 days in this study, the same as was used in a similar study[2] of the light-water-reactor fuel reprocessing plant.

Although such a plant has not been built and is now only in the design stage,[3] it is expected that most operations performed in an HTGR fuel reprocessing plant will be in a massive building in the order of 200 ft wide, 600 ft long, and in excess of 100 ft high above the foundations.[4] The main process operations, such as graphite-block crushing, fluidized-bed burning, particle separation and crushing, secondary burning, dissolution, and solvent extraction, will be performed in areas with 3-ft- to 5-1/2-ft-thick walls of heavily reinforced concrete. A partial plan view of a conceptual plant[4] is shown in Fig. 4.1; two partial cross sections in Figs 4.2 and 4.3 provide additional information concerning several of the individual areas.

The HTGR fuel reprocessing plant will be considerably larger than the corresponding light-water-reactor fuel reprocessing plant, handling essentially the same fuel load in terms of

electrical energy generated, now under construction at Barnwell, S. C., by Allied General Nuclear Services (AGNS).[5] Two reasons for the extra size of the HTGR fuel reprocessing plant are the large area required for burning the graphite and the need for two solvent extraction systems, Acid-Thorex and Purex. These factors will override the fact that the annual capacity of the AGNS plant is 1500 MTHM vs 450 MTHM for the HTGR plant.

Fuel Storage. - Spent fuel elements will be stored in a facility that uses flowing air to remove radioactive-decay heat from up to approximately 15,000 elements.[3] If filled with 160-day-cooled elements, each emitting in excess of 20 Btu/min, the total heat load would exceed 300,000 Btu/min; this would produce a temperature rise in the order of 30^0F in cooling air flowing at a rate of 600,000 cfm. This air will be the first potential source of discharge of radioactive airborne material to the atmosphere, whether it is used in the once-through mode or in a recycle mode that involves cooling coils and the discharge of only a few thousand cubic feet of air per minute. The escape of radioactive gases from a fuel block will be detected when the cover of the shipping container is removed in the fuel handling area. Leaking fuel blocks will be individually cooled and the cooling air vented to an appropriate off-gas treatment system. The fuel-storage cooling air will probably be discharged through a building vent after being passed through roughing and HEPA filters. The quantities of radioactivity discharged in this cooling air are expected to be several orders of magnitude below those discharged during reprocessing operations.

Fuel Crushing and Burning. - Although alternative processes are being studied, it is expected[1,4] that the initial steps in the recovery of residual and bred uranium values will be crushing of the graphite blocks into particles of maximum dimension less than 3/16 in. and burning these in a fluidized bed reactor (Fig. 4.5). Residues from the burning operations will be mixtures of ThO_2 and 23R particles, ThO_2 and 25R particles, or ThO_2 and 25W particles, with thoria constituting, on the average, in excess of 90% of the total uranium plus thorium. The fuel element size reduction will be accomplished by use of a three-stage crushing system consisting of two overhead eccentric jaw crushers followed by a double-roll crusher. The product from this crushing operation will be pneumatically conveyed to a primary-burner feeding system. The burner will be fed continuously while graphite burns exothermically; product will be withdrawn periodically after an endothermic burn which reduces the carbon content of the ash to a level appropriate for subsequent dissolution and solvent extraction. Residue from the primary burner may be conveyed to a second, semicontinuous fluidized-bed burner to complete the oxidation of the graphite and to bake tritium out of the ThO_2.

The crushing and burning operations are major sources of gaseous radioactive effluents. These will include ^{14}C as CO_2, ^3H as H_2O, ^{75}Se, quantities of noble gases and iodines, activation products of impurities in the graphite, fertile particles, and fissile particles whose SiC coatings have broken. These gases will also contain very fine particles of solids with a complete spectrum of fission products from fertile and fissile particles. Semivolatile species, such as ruthenium, will vaporize more readily if the gas mixture contains an excess of oxygen. Burning will be performed with an excess of oxygen; however, CO, as well as CO_2, N_2, and nitrogen oxides will be present. The nitrogen oxides will be converted to N_2 and water and the CO to CO_2, probably by use of catalytic converters.

Particle Separation. - Residues from the primary burners will be conveyed to a mechanical separator, Fig. 4.5, and divided into two streams: the thorium-bearing stream will report to the

Acid-Thorex process dissolver; the uranium-bearing stream, containing most of the TRISO-coated fissile particles, will be leached with Acid-Thorex reagent[6-9] [13 *M* HNO_3, 0.04 *M* HF, 0.1 *M* $Al(NO_3)_3$] to dissolve residual ThO_2, washed with water to remove the thorium nitrate solution so formed, and then dried. The thorium nitrate solution and water wash solution will be transferred to the Acid-Thorex dissolver. The remaining TRISO-coated fissile particles of the 25W stream will be retired and sent to waste storage; particles of the 23R and 25R streams will be conveyed to a crusher to break the SiC coating. The resulting material will be burned to convert UC_2 to U_3O_8 and internal pyrolytic carbon to CO_2. Subsequently, the U_3O_8 of the 23R stream will be dissolved in nitric acid or Thorex reagent, and the U_3O_8 of the 25R stream in nitric acid. Residual SiC will report to a solid waste treatment process

At present, pneumatic classification, the subject of ongoing studies,[10-13] is the preferred method for separating SiC-coated fissile particles from fertile particles.

Fuel Dissolution. - Two dissolution systems will be used to reprocess HTGR fuels, that is, the Acid-Thorex process solvent[6-9] and the Purex process solvent (HNO_3).[14] ThO_2 in all three streams (23R, 25R, and 25W) will be transferred to the Thorex process dissolver after separation from the fissile particles. This dissolving step will probably have a small residue that may contain the very slowly soluble, or insoluble, elements such as palladium, ruthenium, and molybdenum. Plutonium, which will be present to the extent of about 200 ppm in the heavy metal (Th + U), is expected to dissolve in the Thorex reagent. The residue may report to a second dissolver or to a washer, after which it will be transferred to high-level waste. The solution from the Acid-Thorex process dissolver, plus the leach and wash solutions mentioned above, will be sent to a feed adjustment tank and then to the solvent extraction equipment of the Acid-Thorex process. This dissolving operation is a major source of radioactive effluents since most of the krypton, xenon, radon, and in the order of 90% of the iodine formed in the fertile thorium particles will be released during this operation. Off-gases from the dissolution operation will also contain an aerosol of droplets of highly radioactive dissolver solution which contain a complete spectrum of the radioactive materials in the solution. On drying, these droplets form radioactive solid particles. In the oxidizing condition of the dissolver solution the semivolatile ruthenium may partly vaporize and be an important source of gasborne activity.

The second of the two types of dissolving is that associated with the residual enriched uranium in the 25R particles which will be recovered by use of the Purex process.[14] Except that this stream of fissile material will contain less than 2% as much heavy metal as is in the thorium + 23R stream, the same comments concerning airborne effluents also apply to the 25R stream. The Purex process dissolving operation has been performed for many years. Yet one difference will obtain in comparing past operations with those involving the 25R stream of the HTGR cycle as follows: burnup of the IM particles that subsequently form the 25R stream will be in the range 650,000 to 700,000 MWd/MTU whereas light-water-cooled power reactor fuel burnup to the present time has, in general, been less than 30,000 MWd/MTU. Burnup of 84%, reported by Homan et al.,[15] of fissile atoms in experimental fuels corresponds to about 800,000 MWd/MTU; the 15% burnup of thorium in fertile fuels reported by these authors corresponds to more than 140,000 MWd/MT Th.

Fuel Purification. - Fuel purification will be accomplished by the use of two solvent extraction processes, i.e., the Acid-Thorex process[6-9] and the Purex process[14] (Fig. 4.5). In the

Acid-Thorex process the uranium and thorium are separated from each other and from the fission products, transuranium elements, activation products, and inert impurities. The uranium is recovered as a highly purified product for recycle; thorium is recovered as an impure product and retained in storage. The fission products, transuranium elements, activation products, and inert impurities are retained in a nitric acid solution as high-level radioactive waste. In the Purex process, uranium is separated from the waste fission products and other materials (as described above) and recovered as a high-purity product for recycle. Both Thorex and Purex processes use tributyl phosphate, dissolved in a hydrocarbon such as dodecane, as the solvent. The solvent is vigorously mixed with the nitric acid dissolver solution in a series of contactors. Thorium and uranium transfer from the aqueous phase to the solvent phase while most of the fission products and other materials remain in the aqueous phase. Plutonium will also transfer to the solvent phase if the solution redox potential is adjusted to keep this element in the +4 or +6 valence states, but will remain in the aqueous phase if adjusted to keep it in the +3 valence state. The uranium, thorium, and plutonium are separated from each other in successive contactors. Very high separations are possible so that extremely small fractions of the fission products, activation products, or transuranium elements remain with the uranium. Maximum achievable separations will not be needed since the high radioactivities of ^{232}U, and its decay products, in recycle ^{233}U and ^{235}U (in the latter due to cross-contamination with fertile thorium particles) will require that these fissile materials be refabricated in remotely-operated plants. Thorium, plutonium, and other transuranium elements can similarly be separated from each other and from fission and activation products and inert impurities. However, in the study it is assumed that none of these is recovered as a highly purified product. The base-case plant includes storage of these materials.

The off-gas from the vessels in the solvent extraction systems will contain, in addition to radon, an aerosol of radioactive aqueous and organic materials. The organic vapors can combine with iodine to form organic iodides that may be more difficult to remove from the gaseous effluent than is molecular iodine.

Fuel Packaging. - The purified uranium in the 23R and 25R streams will be packaged in shipping containers and shipped to the fuel refabrication plant as aqueous solutions if the refabrication plant is not located on the same site as the fuel reprocessing plant. However, it is expected that these two plants will be adjacent and that solutions will be transferred through pipes from the reprocessing plant to the refabrication plant. These packaging operations will be sources of small amounts of airborne particulate matter and a significant source of ^{220}Rn.

The fuel received at the reprocessing plant annually will contain in excess of 700 kg of plutonium and 28 kg of transplutonium elements. However, there will be no incentive for recovering plutonium from either the Thorex or Purex systems since it will contain too much ^{238}Pu to be of value as recycle fissile material. Instead, the plutonium will be rejected as a component of the high-level waste for disposal, or will be stored as a component of the thorium product, or stored as a separate product, until such time as a market develops for it as a heat source. The storage facility will be a potential source of airborne radioactivity. First, if plutonium is stored as a solution, it will be necessary to provide continuous monitoring of the gas space of storage units for hydrogen, formed by radiolysis of water by alpha particles from ^{238}Pu. The energy of these particles, about 0.41 W/g Pu, will be absorbed efficiently by aqueous solutions. If a plutonium solidification step is added to the facility, additional scrubbers and HEPA (high-efficiency) filters will be provided to ensure that the off-gas from these operations does not contribute a significant amount of radioactive material to the gaseous effluent from the reprocessing plant.

At reprocessing time, the lifetime average ^{228}Th content of the thorium will be 0.65 ppm (or 530 Ci/MTTh) when the initial ^{230}Th content of the fertile material is 100 ppm; corresponding values for fertile thorium containing only 10 ppm ^{230}Th are 0.30 ppm ^{228}Th and 250 Ci ^{228}Th/MTTh. Such large quantities of ^{228}Th and its beta- and gamma-ray emitting decay products will preclude recycle of the thorium to the fresh-fuel fabrication plant. Instead, the thorium will be stored for 20 to 40 years, during which time the quantity of radioactivity will decrease by a factor of 10^3 to 10^6 as the 1.9-year half-life ^{228}Th decays. There will be no incentive to produce high-purity thorium for storage since repurification to remove lead, the stable end-product of decay of ^{228}Th, and corrosion products will be necessary before reuse of the thorium. During storage of the thorium, there will be a severe problem for 15 to 20 years, or longer, due to formation of gaseous ^{220}Rn. The rate of formation of ^{220}Rn will build up to about 8×10^{10} Ci/yr per initial 450 MTHM in the plant if the thorium source contains 100 ppm ^{230}Th; this will decrease to about 8×10^7 Ci/yr in 19 years and to 8×10^4 Ci/yr in 38 years, since the 23R stream containing the parent ^{232}U will be removed from the plant within a year. If thorium is collected in aqueous solutions all during the life of the fuel reprocessing plant, the problem due to ^{220}Rn formation will increase approximately tenfold.

Process Cell Ventilation. - The process building will be supplied with washed and conditioned air that will be introduced into normal access zones, flow to adjacent limited access zones, and then to restricted access zones. The flow will be maintained in the direction of increasing contamination potential by providing progressively lower pressures with about 0.1 to 1.0 in. H_2O pressure difference between zones. Radioactive solutions that may leak from process vessels and piping to the floor of the process cells can be vaporized and will contribute radioactive materials to the ventilation air.

Treatment of Liquid Wastes. - Modern light-water-reactor fuel reprocessing plants are designed to prevent the release of radioactive liquids. In this study it is assumed that no liquid radioactive wastes will be intentionally released from the plant. Nonradioactive cooling water is discharged continuously and, if radioactive materials should leak into the cooling water, the radiation detection and diversion system would divert the water to evaporators or to retention basins. These evaporators concentrate miscellaneous plant waters that contain low concentrations of radioactive materials. The concentrate containing the radioactive materials is sent to a waste storage tank. Some of the water vapor is condensed for recycle to the plant; excess water vapor is discharged up the 100-m-high stack. This vapor contains radioactive tritium as tritiated water. The highly radioactive acidic wastes from the solvent extraction system are concentrated by evaporation to decrease the volume to be stored and to recover the nitric acid for reuse.

Liquid Waste Storage. - The concentrated liquid wastes from evaporators will contain essentially all of the nonvolatile fission products from the spent fuel. It is general practice in LWR fuel reprocessing plants to store this liquid for an interim period. Wastes are stored as acidic solutions in stainless steel tanks. The need for constant surveillance and periodic replacement of tanks and equipment provides the incentive to convert these wastes into a stable solid form for early shipment to a federal repository. This incentive will be more urgent at the HTGR fuel reprocessing plant because of the need to contain large quantities of gaseous ^{220}Rn, produced from ^{228}Th in the thorium that reports to this waste, and the simultaneous need to

sparge these wastes, or purge the vapor space, to remove radiolytic hydrogen. As sparge or purge gases, possibly CO_2, pass through or over the liquid waste, both hydrogen and radon will be transferred to the vessel off-gas. If the liquid wastes are not sparged or purged, the concentration of radiolytic hydrogen will increase, thereby possibly leading to a hazard; if these wastes are converted to solids, radon will decay in place. Federal regulations require the solidification of the wastes within a 5-year period.

Waste Solidification. - A system for solidification of wastes will probably be a part of the model plant to conform with the licensing requirement[a] for eventual solidification of high-level wastes. The system could be operated so that the off-gas from the calcination unit would be scrubbed by the raffinate waste from the extraction system, thereby increasing overall recovery of nitric acid for recycle and reducing the particulate burden of the off-gas. The noncondensable vapors would pass into the off-gas treatment system and should not increase the net amount of radioactive material released from the plant in the gaseous effluent.

4.2 Composition and Amount of Radioactive Material Entering the Model Plant

A list of the radionuclides selected as components of the source term for this study, along with their relative inhalation hazards, is presented in Table 4.1. The list was compiled from the ORIGEN[16] computer code, which calculates the relative inhalation hazard for each nuclide by dividing the curies present in one metric ton of fuel at 160 days cooling by the Radiation Concentration Guides[b] (RCG) for that nuclide. The criteria for selection of the nuclides to be used are as follows:

1. Isotopes of elements that are major components of nearly all living organisms, such as tritium and ^{14}C, isotopes of elements that concentrate in the food chain, such as ^{129}I and ^{131}I, and noble-gas nuclides that are presently of public concern, such as ^{37}Ar, ^{85}Kr, ^{220}Rn, and ^{222}Rn.
2. Actinide nuclides whose contribution to the relative inhalation hazard is $>0.02\%$ of the total (3.02×10^{17} m^3 of air at RCG, of which 2.78×10^{17} is due to actinides).
3. Fission products whose contribution to the relative inhalation hazard is $>0.02\%$ of the total (of which 2.42×10^{16} m^3 of air is due to fission products). Radionuclides that are excluded on this basis were examined to ensure that they would not contribute more than 0.02% of the total body dose for individuals in the Case 1 study (<0.01 millirem) as the result of bioaccumulation in the environment.
4. The transuranium nuclides ^{237}Np, ^{239}Np, ^{239}Pu, ^{240}Pu, ^{242}Pu, ^{241}Am, ^{243}Am, ^{242}Cm, and ^{244}Cm would not be included in the source terms on the above bases. However, they are included because of their importance in the fuel cycle.

The amount of radioactive materials entering the plant is calculated with the ORIGEN computer code for a plant reprocessing 450 metric tons of heavy metal (MTHM) per year irradiated to about 95,000 MWd/MTHM at a specific power of about 80 MW/MTHM, on-stream about 80% of the time, and cooled 160 days. Here, 450 MTHM is identified as thorium-plus-uranium charged to reactors. Details of material balances from CITATION[17] calculations are shown in Tables 4.2 and 4.3 for the lifetime average annual values and for the

---

[a]Code of Federal Regulations, Title 10, Part 50, Appendix F.

[b]Code of Federal Regulations, Title 10, Part 20, Appendix B, Table 2, Column 1.

20th cycle (nearly steady-state), respectively. The source term, Table 4.4, is based on calculations with the ORIGEN code of yields of fission products and of activation products due to impurities in graphite, thorium, and uranium. Maximum likely impurity concentrations,[18] Table 4.5, were used in calculating the quantities of activation products; quantities of radioactive materials that would be formed from 1 ppm of each of many impurities are listed in Table 4.6.[a] Input data for the ORIGEN program, Table 4.7, were obtained partly from the reactor physics code CITATION[17] and partly from the assumption that the thorium used in the reactor will contain 100 ppm ^{230}Th. At this concentration of ^{230}Th, the steady-state concentration of ^{232}U in the 23R stream was calculated to be about 940 ppm, Table 4.8, and its lifetime average was assumed to be about 80% of this value, namely 750 ppm. Steady-state concentrations of ^{232}U corresponding to lower concentrations of ^{230}Th in the thorium are also given in Table 4.8. Mass flow rates of nearly all of the chemical elements from the fuel and impurities are given in Table 4.9; this does not include chemicals added during reprocessing.

4.2.1 *Source Terms for Radioactive Nuclides with Precursors Present*

As noted above, the source terms presented in this report are based on the ORIGEN program[16] and are calculated according to Eq. (4-1),

$$ST_j = A_j \times PC / DF_j \ , \qquad (4\text{-}1)$$

where

ST_j = the quantity of nuclide j discharged from the plant stack annually, Ci/yr;
A_j = the quantity of nuclide j *present* in the fuel at the selected decay time (160 days after discharge in this report), Ci/MTHM;
PC = plant capacity (450 MTHM/yr);
DF_j = overall decontamination factor for nuclide j (activity in the fuel at processing time/activity discharged from the plant).

The source term has units of Ci/year because it is convenient to refer to the plant capacity, PC, in units of MTHM/year.[b]

Equation (4-1) contains several assumptions that are not necessarily correct. First, it involves one year's inventory which implies, for example, that thorium or high-level wastes contribute to the source term only up to the end of one year from the time the fuel and fission products were removed from the graphite or from the SiC coatings. No additional contributions of wastes to the source term are included even if these are stored for 5 or 10 years in unencapsulated form. This first assumption may be reasonably accurate for most radioactive nuclides, but it is not so for those that are being formed from precursors in the

[a]Table 4.6 is based on an updated "light-element" ORIGEN library. As described by Kee,[19] this includes all 282 naturally-occurring isotopes (of which 14 are radioactive with very long half-lives) of all elements of atomic numbers less than 84 and their activation products subject to the availability of data on neutron absorption cross-sections.

[b]One curie is that quantity of any radioactive isotope undergoing 3.7×10^{10} disintegrations per second. Values for ^{232}U, ^{228}Th, ^{224}Ra, and ^{220}Rn are 4.67×10^{-2}, 1.22×10^{-3}, 6.25×10^{-6}, and 1.08×10^{-9} g, respectively.

waste or thorium, particularly the gas ^{220}Rn. The second assumption contained in Eq. (4-1), when the definition of A_j is as given above, is that there be no precursors in the fuel from which nuclide j can be formed. This assumption is correct for most nuclides except, for example, ^{95}Nb (formed from ^{95}Zr), ^{103}Rh (formed from ^{103}Ru), ^{224}Ra (formed from ^{228}Th), ^{212}Pb (formed from ^{216}Po), and, especially, ^{220}Rn (formed from ^{224}Ra).

Gaseous ^{220}Rn will be formed continuously, Fig. 4.4, in fuels or wastes that contain ^{232}U or its daughters ^{228}Th or ^{224}Ra and will decay nearly as fast as it is formed. However, because it is a gas and assuming that the burners operate at steady state, then much of the ^{220}Rn that escapes from ThO_2 or U_3O_8 particles will be swept by CO_2 and other gases into the burner off-gas line. Similarly, purging of aqueous solutions of high-level wastes and irradiated thorium to remove hydrogen (formed from radiolysis of water) will transfer ^{220}Rn into the VOG nearly as rapidly as it is formed. It is in this operation that corrections to Eq. (4-1) must be applied for both the first and second assumptions.

Correction of the definition of the term A_j as used in Eq. (4-1) is important in the case of ^{220}Rn, ^{224}Ra, and some other nuclides, and requires that the word "present" in the definition be replaced by "present and formed". The rate of formation, and decay, of ^{224}Rn and ^{220}Rn are expressed as

$$dN_2/dt = \lambda_1 N_1 - \lambda_2 N_2, \tag{4-2}$$

where N_1 is the number of atoms or gram-atoms of ^{224}Ra present, N_2 is the number of atoms or gram-atoms of ^{220}Rn present, and λ_1 and λ_2 are the corresponding decay constants. In the fuel reprocessing plant, ^{220}Rn will be present in the burners and in other locations (dissolver, etc.) as long as ^{232}U and ^{228}Th are present; in waste tanks, containing very little ^{232}U but most of the ^{228}Th, the quantity of ^{220}Rn formed will slowly begin to decrease as ^{228}Th decays. Until the ^{232}U and its daughters are encapsulated (but considering only 1 year of elapsed time after starting the reprocessing of a batch of fuel), the quantity of ^{220}Rn in the plant at steady-state operation will be nearly constant; that is, it will be formed as fast as it decays. The decay rate is simply $-\lambda_2 N_2$; the production rate is the negative of this, or $\lambda_2 N_2$. The term $\lambda_2 N_2$ shows that, for every curie of ^{220}Rn present, $\lambda_2 N_2$ Ci will be formed during the course of a year, where λ_2 is expressed in units of yr^{-1}. From the 55.6-second half-life of ^{220}Rn, its decay constant is $3.93 \times 10^5\ yr^{-1}$; that is, 3.93×10^5 curies are produced in 1 year for each curie present at steady state. Although ^{220}Rn decay and production rates are equal at steady state, it is important to determine where the decay occurs, that is, how much ^{220}Rn decays within the plant and how much is released to decay outside the plant.

Radioactive nuclides other than ^{220}Rn have precursors in fuels and wastes; however, the absence of a long-lived nuclide in the precursor chain invalidates the assumption of secular equilibrium. Within such limitation, the formation rates of several nuclides are summarized as follows:

Nuclide Formed	Nuclide Half-Life	Precursor	Precursor Half-Life	Nuclear Formation Rate[a] (per year)
^{95}Nb	35.1 d	^{95}Zr	65.5 d	7.2
^{103}Rh	56 m	^{103}Ru	39.6 d	6510
^{212}Pb	10.64 h	^{216}Po	0.15 s	571
^{220}Rn	55.6 s	^{224}Ra	3.64 d	3.93E+5
^{222}Rn	3.824 d	^{226}Ra	1600 y	66.2
^{224}Ra	3.64 d	^{228}Th	1.913 y	69.6
^{228}Th	1.913 y	^{232}U	72 y	0.36

It should be noted that the quantity of ^{220}Rn, or any other nuclide in a chain, formed during a specified time can be calculated easily and exactly from ORIGEN output by use of Eq. (4-3), where the following definitions apply.

N_j^0 = the quantity of nuclide j present in the reference quantity (such as metric ton) of heavy metal at reference time t_0, g-atoms/MT;

N_j = the quantity of nuclide j present in the reference quantity of heavy metal at a later time, t, g-atoms/MT;

Q_j = the quantity of nuclide j that was formed (and partially decayed) during the specified time interval, $t - t_0$, g-atoms/MT.

$$Q_j = \sum_{j=1}^{n-1} (N_j^0 - N_j) \tag{4-3}$$

For the first member of a chain,

$$Q_1 = 0;$$

for the second member,

$$Q_2 = N_1^0 - N_1;$$

for the third member,

$$Q_3 = (N_1^0 - N_1) + (N_2^0 - N_2);$$

and so on.

The significance of the formation of ^{220}Rn in the fuel reprocessing (or other) plant is that most of it will enter the VOG system; the decontamination factor (DF) for this nuclide is due entirely to holdup and decay in pipes, vapor volumes of various tanks, and in equipment installed for the specific purpose of providing holdup time.

[a]Curies formed per curie present at secular equilibrium.

4.3 Description of Waste Treatment Methods

Effluents from the HTGR fuel reprocessing plant will be extensively treated using a variety of unit process operations to minimize the release of radioactive or other noxious materials. Many of these methods have been used in LWR fuel reprocessing plants or are being developed for such use in LWR or HTGR fuel reprocessing plants. Volatile, semivolatile, and particulate radioactive materials will be removed from gasborne effluents by filters, adsorbers, absorbers, and scrubbers. The treated gasborne effluents will then be released through a 100-m-high stack to achieve a high degree of dilution in the atmosphere. The primary methods for treating liquid radwastes are and will be evaporation and ion exchange (demineralization). Treated liquid radwastes will not be released intentionally; instead, any excess water in these wastes that cannot be recycled will be vaporized and the water vapor released through the 100-m stack. Radwaste treatment systems are described in Sections 4.3.1-4.3.12; in addition, the "state of the art" of each particular treatment method is discussed. The "state of the art" for the treatment methods varies from well-established technology that has been used in LWR fuel reprocessing plants to advanced methods which are in the small engineering scale of development. The advanced radwaste treatment systems used in this study include the iodine evolution and the Iodox[a] processes for retaining iodine; the "bake-out" process for releasing tritium from uranium and, particularly, thorium oxides; selective absorption processes for retaining tritium (as water); conversion of CO_2 to $CaCO_3$; and the KALC process for retaining radon, argon, and krypton. Currently, these processes are being developed, on an experimental engineering basis, for use in both high-temperature gas-cooled reactor and liquid-metal fast-breeder reactor fuel reprocessing plants. It is very probable that these processes can be "reduced to practice" for reprocessing HTGR fuels.

4.3.1 *Filtration*

High-Efficiency Particulate Air (HEPA) Filters. - HEPA filters have been used for many years in the nuclear industry to remove radioactive particles from air streams. A standard HEPA filter has a cross section of 2 ft by 2 ft and a depth of 1 ft with an air capacity of about 1000 cfm. The filters are installed in banks to achieve the required system capacity. These filters are expendable (single-use) pleated mats of fiberglass paper. They are specified to exhibit a minimum efficiency of 99.97% for 0.3-micrometer-diameter particles and a maximum resistance (when clean) of 1.0 in. H_2O pressure when operated at rated airflow. Tests of filter efficiency are conducted in special facilities which ensure that no significant leakage occurs around the sides of the filter or through other bypasses. It is necessary to construct an equally tight filter enclosure in a field installation to achieve the rated filtration efficiency. The construction of large, tight filter enclosures is a difficult engineering task. Testing of the individual filter banks in place in the enclosure, both before and periodically during the service period, by the dioctyl phthalate (DOP) smoke test is required to ensure that no significant leaks are present in either the filter or the enclosure.

Variables that have been considered in HEPA filter performance analyses include the particle size distribution of the various plutonium aerosols encountered. A literature survey by Davis, however, does not indicate a gross variation in the range of reported particle sizes in field operations.[20]

---

[a]Formerly called Iodex.

Numerous tests have been carried out with plutonium aerosols in small laboratory and large-scale field installations. In a detailed survey Hetland and Russell[21] found large-scale filter systems in operation at the AEC Rocky Flats Plant which produced overall mass removal efficiencies of 10^7 or greater. One such system showed a removal efficiency of 99.999% across the first two banks of a system of four HEPA filter banks in series, 94% across the third filter bank, and 83% across the fourth filter bank. The low efficiency value for the fourth bank was attributed to probable bypassing of gases and was not a measure of filter media performance. This system, which was about 15 years old, does not represent those presently installed at Rocky Flats where most of the filter plenums have been replaced or modified within the last few years.[22,23] The newer plenums are designed to facilitate testing of individual filters and filter banks and to ensure that each stage of filtration can be certified to be at least 99.95% efficient with pneumatically-generated DOP aerosol. Data presented by Linck and Geer[22] for some 4-stage systems at Rocky Flats show efficiencies of >99.99% to 99.998% for fourth stages and 99.997% to 99.999% for first stages. These efficiencies of production-scale equipment equal (or perhaps exceed) those obtained by Ettinger et al.[24-26] in laboratory tests using plutonium aerosols in small installations that are tightly sealed and tested periodically for leaks with DOP. Ettinger et al.[24-26] observed removal efficiencies of at least 99.97% for each of three single filter stages in series. USNRC Guide 3.12 for the design of plutonium ventilation systems indicates that removal efficiencies of >99.95% should be obtained for a single bank of HEPA filters if the installation containing the filters is constructed according to the recommended guidelines and is tested for leaks after installation of the filters.[27] Consequently, a value of 99.95% has been used in this study to represent the *rated* efficiency of each HEPA filter.

Several factors must be considered, however, in predicting the overall installed efficiency of multiple filters in series and of the overall fuel reprocessing plant ventilation air filtration system, even though each bank of filters is tested separately in place with DOP and shows an efficiency of 99.95% or greater. First, whereas two HEPA filter banks in series, as used in the Case 1 plant design of this report, Fig. 4.5, correspond to a minimum particulate DF of 4×10^6, such a large value has not been demonstrated at a commercial fuel reprocessing plant, although it has been at Rocky Flats. Second, filter efficiencies are sensitive to gas flow rate, and possibly all filters in a bank may not experience the same flow rate. Third, the concentration of particles is different for each stage of filtration, and filter efficiency varies with particulate concentration.[28] Finally, very small quantities of radioactivity that leak into process cell spaces will be carried by cell ventilation air through only one HEPA filter, Fig. 4.5. Moeller[29] has recently summarized performances of air cleaning systems in nuclear facilities during the years 1966-1974. The present analysis presumes that performances of HEPA-filter installations after 1985 will not be subject to the design and operational errors of these earlier systems. However, Burchsted[28] recommends the assignment of lower overall efficiencies to filter systems that use HEPA filters in series until more experimental information is available from large installations. Consequently, the contributions of HEPA filters, two in series in off-gas lines, but only one in ventilation ducts, to the overall plant decontamination factors (DFs) selected for use in this study are conservative in comparison to rated DF values; i.e., the HEPA filters are estimated to transmit 1×10^{-5} of the activity incident to them, corresponding to a total particulate removal efficiency of 99.999% and a DF of 1×10^5. For each case study, this approach will produce cost and dose estimates that are conservative. The potential exists for mechanical damage to the filters during their initial installation and during replacement in the enclosures, although such damage will be located when routine, preoperative testing with DOP is employed as at the ERDA Rocky Flats Plant. After operations have started, filter

efficiency can be decreased through: (1) attack by corrosive chemicals, such as hydrogen fluoride;[a] (2) degradation of the binder for the filter fibers by condensed moisture[a] or by radiation; (3) matting of the retained particles, which decreases the resistance of the binder to moisture and causes an increase in pressure drop; (4) degradation by high temperatures;[a] and (5) damage by sudden pressure surges. Thus, continuous monitoring of the pressure drop across the filter and periodic testing with DOP are required to ensure that the filters are operating satisfactorily.

Sand Filters. - Sand filters[31-34] are constructed of graded layers of aggregate and sand. The aggregate is in layers of relatively coarse (2-1/2 in. x 1-1/2 in.) to fine particles (4 - 16 mesh). The sand layer is generally about 30 in. thick and made of 20-50 mesh sand. The flow through the filter is upward. Sand filters have good resistance to heat, shock, and chemical attack, but have the disadvantages of higher cost, higher pressure drop, and lower aerosol collection efficiency when compared to other types of aerosol filters such as HEPA filters. For some applications, it may be advantageous to use combinations of sand and HEPA filters to eliminate some of the disadvantages of either type when used alone.

Large, fixed-bed sand filters at Hanford have been operated continuously for approximately 20 years (in 1968) without maintenance or replacement and at Savannah River for about 18 years[34] (in 1974). Based on actual measurements at both installations, the collection efficiencies of the filters are >99%.[32] Penetration-rate tests have demonstrated that a 30-in.-deep sand bed is roughly equivalent to a single HEPA filter for the particle size remaining airborne after two stages of HEPA filtration.[21] (The comparison is based on a superficial air velocity of about 5 ft/min[33,34] at the face of the sand filter and 125 or 250 ft/min specification for a HEPA filter.) However, in this report a sand filter following two HEPA filters in the off-gas system and one HEPA filter in the ventilation system was assigned a DF of 10 for particulate and semivolatile matter.

4.3.2 *Evaporation*

Evaporation is commonly used in the chemical industry to concentrate aqueous solutions by boiling off the water and leaving behind most of the dissolved solids and materials having vapor pressures lower than that of water.[35] Similarly, evaporation is very effective in separating dissolved radioactive solids from waste water, and essentially all sizes and types of evaporators have been used in the nuclear industry. However, materials that have vapor pressures higher than that of water or that combine with water to form high-vapor-pressure materials are difficult to separate from water by evaporation. Because of these factors, iodine, ruthenium, and tritium are among the few radioactive materials that are poorly separated from waste water by evaporation. System DFs of 10^3 to 10^4 can be expected for nonvolatile radioactive contaminants treated in single-stage evaporators. Similar DFs can be expected for ruthenium under alkaline, but not oxidizing or acidic, conditions. Decontamination factors for ruthenium and iodine depend on whether the solution is alkaline-nonoxidizing or acidic-oxidizing. Under alkaline-nonoxidizing conditions, the DF for ruthenium will also be in the range 10^3 to 10^4 while that for iodine will be in the range of 10 to 100; under acidic-oxidizing conditions the DFs for these elements may be much lower.[35] These values assume that the evaporator is

---

[a]However, filter media that are very resistant to damage by hydrogen fluoride, water, and fire have already been produced,[30] although not used in commercial installations. Development of media to resist attack by other chemicals, such as nitrogen oxides, is also in progress.

well-designed, adequately sized, and operated with reasonable skill. An overall decontamination (separation) factor of more than 10,000 between condensate (distillate) and thick liquor (concentrate) is generally expected for nonvolatile radioactive contaminants treated in single-stage evaporators.

In evaporating radioactive waste solutions, care must be taken to avoid too rapid boiling or foaming since each tends to cause the entrainment of minute particles of radioactive solids or liquid droplets in the vapor rising from the boiling liquid surface. In addition, the velocity of the vapor must be kept low and the distance the vapor travels upward (disengaging space) must be made as great as practicable to maximize the extent to which particles and droplets fall back into the liquid instead of being carried over into the condenser with the vapor. A variety of devices to deentrain particles and droplets can also be incorporated into evaporators to improve DFs to as high as 10^5 or even 10^6. Such devices work by changing the direction of the vapor path, causing particles and droplets to impinge on and adhere to metal surfaces from which they can later be flushed back into the liquid. Wire mesh filters, sieve trays, bubble-cap trays, and centrifugal separators are among such devices.

Evaporators for radioactive waste can vary from simple pots with steam heating pipes coiled inside to elaborate devices having pumps to circulate the feed through outside heaters and compressors to squeeze more heat efficiency from the hot vapors (vapor compression evaporators). In general, less extensive maintenance and more satisfactory operation are obtained from simple evaporators equipped with adequate auxiliaries to achieve the DF required. Depending on the amount of dissolved solids in the waste fed to an evaporator, a volume reduction of 10 to 50 can usually be achieved in the radioactive thick liquor (bottoms or concentrate) while maintaining the level of radioactive material in the condensate (overheads or distillate) 10^4 to 10^6 times lower than that in the bottoms. To achieve such good separation, however, no foamover can be permitted and entrainment must be kept to a minimum. Therefore, laundry wastes, containing detergents or other foam-producing materials, must be kept out of the evaporator. Liquid waste evaporators should be tested before use on actual waste streams. This is probably the only reliable method of demonstrating that the desired DF values can be achieved over the extremes of conditions expected. Stable isotopes and tracer levels of radioactivity can be used in these tests.

The behavior of iodine during liquid waste evaporation is complicated and poorly understood. Studies are needed to better define its vapor pressure as a function of pH, redox potential, and other parameters which determine the physicochemical behavior of this element. Changes in operating conditions suggested as a result of these studies should be confirmed in large-scale evaporator tests.

4.3.3 *Adsorption on Silver Zeolites*

Silver and other metal-exchanged zeolites have been investigated on a laboratory scale for use in removing iodine from gaseous effluents.[36-38] The adsorbent is prepared by a partial replacement of sodium ions by other cations in the zeolite. Silver-exchanged zeolites have received the most laboratory testing; other cations such as Cd, Cu, Hg, Pb, Tl, and mixed rare earths have also been studied, but they are less effective than silver.[36] The sorption efficiency of the silver zeolites for both elemental iodine and methyl iodide is >99.9% (DF = 10^3 - 10^4) with fresh sorbent maintained at about 200°C. Several variables are important[39] in estimating the

effective decontamination factors of silver zeolite beds for ^{129}I and ^{131}I. These include: (1) nuclide half-life; (2) the extent of isotopic exchange between fresh iodine and that which is already sorbed; and (3) the extent of recycle of iodine in the system. Ackley and Davis[38] performed long-term (11 months) small-scale tests of iodine removal, with 60-day ^{125}I tracer, and of CH_3I removal, with 12.4-hour ^{130}I tracer, by silver zeolite beds. Their results can be interpreted[39] by including loss of short-half-life isotopes by radioactive decay as part of the measured (or expected) DF. The DF due to decay can be much larger than that due to trapping by silver zeolite for isotopes with half-lives as short as the 12.4 hours of ^{130}I. Correspondingly, the DF for ^{131}I, with a half-life of only 8.05 days, will be greater than that for ^{129}I, with a half-life of 1.6×10^7 years, by a factor that will depend on the extent of isotopic exchange and on the history of the zeolite, including the time during which the bed has been operating and whether nonradioactive iodine was deposited on it before "hot" startup.

Silver zeolite has the following advantages when compared with other adsorbents such as activated charcoal:

1. Stability. Iodine is not released at temperatures up to 800°C.[40] Iodine is removed from air streams containing methyl iodide at temperatures up to 400°C.
2. Nonflammable. Zeolites are inorganic aluminosilicates and are not flammable.
3. Low Explosion Hazard. Zeolites do not react explosively with the oxides of nitrogen.
4. Resistant to Poisoning. Zeolites are resistant to the poisons normally contained in air. However, they are readily poisoned by halides such as chloride.
5. Solid Waste Product. The adsorbed radioiodine species form a solid insoluble product with silver zeolite, which is desirable from the standpoint of waste management.

Although it has not been demonstrated on a plant scale, the efficiency of the silver zeolites appears to be one or two orders of magnitude higher than that of the older type of silver reactors used at Hanford and Savannah River.[41] The high cost of silver may preclude the use of silver zeolites for removal of the bulk of the iodine, and their use may be confined to that of polishing adsorbers after the bulk removal treatment steps. Silver zeolite beds will be used in the AGNS light-water reactor fuel reprocessing plant[42] as polishing units for the removal of iodine from gasborne effluents, and were to be similarly used in the MFRP.[43]

A conservatively low, average, removal efficiency of 99% (DF = 100) for both ^{129}I and ^{131}I on a silver zeolite bed is used in this study pending the development of additional data in plant-scale usage. This is consistent with the estimates presented in current environmental analyses.[5,44] The silver zeolite bed would be replaced when the average DF for ^{129}I decreased to 100. The average DF for short-lived ^{131}I will be greater than for ^{129}I, since the effective retention of the former is increased by decay due to its short half-life.[39]

4.3.4 *Adsorption on Other Metal Zeolites*

Cadmium zeolites and other cation-exchanged zeolites are being studied as iodine adsorbers.[45–47] In small-scale tests at the ICPP[48] with elemental iodine, Cd zeolites have yielded DFs up to 10^3 when operated at 80-150°C. Tests have not been conducted with methyl iodide or other organic iodides. Extensive further testing of Cd zeolites on both small and large scales is required to define their efficiency for the removal of elemental and organic iodides, and such tests are projected in the HTGR fuel recycle development program.[49] It is believed that the use of cadmium or other metal zeolites can be "reduced to practice." Cadmium zeolite is of considerable interest because its cost is expected to be less than that of Ag zeolites at comparable loadings of iodine. In this study, Cd zeolite is used to remove the bulk of the iodine, as an alternative to the Iodox or the mercury scrubber systems. Since the capacity and efficiency of the Cd zeolite for both elemental and organic iodides are unknown, the cost and efficiency comparisons are tentative. However, the comparison serves a useful purpose and the computations can be modified as more information becomes available.

An average removal efficiency of 99% (DF = 100) for both elemental and organic iodides of ^{131}I and ^{129}I is assumed in this study for Cd zeolites operated at 150°C at loadings up to 25 mg of I_2/cc of zeolite. As explained in Sect. 4.3.3, the actual DF for ^{131}I is expected to be higher than that for ^{129}I because of the decay effect. The Cd-zeolite beds would be replaced when the average DF for ^{129}I decreased to 100. Thus, the DF can be assured if the organic iodides are efficiently adsorbed, but the capacity of the unit and the rate of replacement of the Cd zeolite remain uncertain.

4.3.5 *Iodine Evolution*

About 95 to 98% of the iodine in the dissolver solution can be evolved by steamstripping in the presence of excess N_2O_3 or a mixture of nitrogen oxides (NO_x). Additional iodine can be evolved by (1) adding an iodine carrier (KI), (2) oxidizing the solution with ozone or H_2O_2, and (3) sparging with N_2O_3. Greater than 99% of the iodine can be evolved from a nitric acid solution by this method,[50,51] and a removal efficiency of 99.5% is used in this study.

The removal of greater than 99% of the iodine from the dissolver solution will be desirable for at least two reasons: (1) it will minimize the extent of formation of organic iodides by subsequent reaction between the organic extractant (tributyl phosphate in a solvent similar to n-dodecane) and aqueous iodine species; and (2) it will reduce the amount of iodide that could leave the plant during vaporization of excess extraction-process water, Fig. 4.5. Minimizing the formation of organic iodides will be desirable since these may be more difficult to remove from gas streams than is iodine. Minimizing the quantity of iodine that moves in the liquid phase from feed solution to aqueous waste will be desirable because there are several processes for trapping this element from the vapor phase that are significantly more efficient than presently available processes for trapping it from aqueous solutions. A further advantage of iodine evolution will be that 99.5%, or more, of the mass of iodine will be transferred to a single process stream from which it can be recovered as a solid waste. Thus, iodine will be effectively removed from the plant liquid streams and will not accumulate in the total plant in a mobile form.

Studies of iodine evolution at the dissolving step of LMFBR fuel reprocessing[52] involve two concepts: (1) no reflux of dissolver solution, in which case steam, carrying most of the iodine, will be condensed in a downdraft condenser and collected in a catch tank for subsequent revaporization of iodine; and (2) reflux of dissolver solution followed by nonreflux distillation to vaporize iodine. Either concept will apply in vaporizing iodine from HTGR fuel-dissolution operations. The iodine evolution process is not complex, and conventional equipment would be used in a commercial reprocessing plant. The process has been successfully demonstrated on a laboratory scale using nitric acid solutions. However, engineering development and a demonstration of the process in a pilot plant or a reprocessing plant with irradiated LWR or HTGR fuel and dissolver solution are required.

4.3.6 *Mercuric Nitrate–Nitric Acid Scrubber*

The mercuric nitrate–nitric acid process for the removal of iodine species from gaseous effluents uses an 8 to 10 *M* HNO_3–0.2 to 0.4 *M* mercuric nitrate solution as a scrubbing agent. Iodine species are scrubbed from the gas stream and converted to a nonvolatile, soluble mercury-iodine complex. The spent scrub solution can be handled (1) by storing in the Concentrated Miscellaneous Waste storage tank along with other liquid wastes (as in the Case 1 study, Sect. 4.5.1), or (2) by installing equipment to recover and recycle the mercury and to isolate the iodine as a solid, sodium iodate (as in Case 2b, Sect. 4.5.3). It is expected that the solid sodium iodate could be packaged in stainless steel cans for storage or shipment to a waste repository. The recycle procedure has several advantages, as follows:

1. Less mercury is used.
2. Less mercury is introduced into the stored wastes. Mercury will vaporize if these wastes are subsequently solidified by a high-temperature process such as calcination.
3. The 1.16 kg of ^{127}I and ^{129}I that enters the plant each day of a 365-day year (1.4 kg/day of a 300-day year) in the fuel is not accumulated in the waste tank.

Iodine in the waste tank will partially vaporize during sparging, which will be performed to provide uniform mixing of successive batches and to minimize sludge formation in the bottom of the tank. This will complicate the problem of retaining iodine in the plant (Sects. 4.5.1 and 4.5.2). Essentially complete vaporization of iodine will occur in the event that these wastes are subsequently solidified by a high-temperature process. The mercury recycle system consists of:

1. Evaporation of the scrub solution followed by cooling to precipitate mercuric iodate. The supernate is recycled to the scrubbing system.
2. Treatment of the mercuric iodate with caustic to form a precipitate of mercuric hydroxide and a solution of sodium iodate. The solids are separated by filtration and are dissolved in nitric acid and recycled to the scrubbing system.
3. Solidification and packaging of the sodium iodate.

The mercuric nitrate–nitric acid system can be used either as a primary step for removing the bulk of the iodine from the off-gas stream or as a polishing unit for removal of small amounts of iodine. Both elemental iodine and methyl iodide, which is the most volatile of the potential organic iodides, are removed by the mercuric nitrate scrubbing system. However, the

system is more efficient for the removal of elemental iodine than organic iodides. Decontamination factors of less than 10 and up to 10^4 to 10^5 have been obtained in experimental systems at ORNL under various operating conditions.[53-55]

The mercuric nitrate–nitric acid scrubbing process has been demonstrated in plant installations using less-concentrated solutions of nitric acid and mercury.[56] Similar scrubbing systems have been installed on the dissolver off-gas and vessel off-gas streams at the Barnwell Nuclear Fuel Processing Plant. The advanced process (described above), which uses a more-concentrated solution of mercuric nitrate and nitric acid, is used in this study. The process and associated system for recycle of mercury and isolation of sodium iodate have been successfully developed and demonstrated at ORNL on a laboratory scale. An equipment DF of 10^2 for ^{131}I and ^{129}I is used in this study for the single mercuric nitrate scrubbing system in the off-gas in Case 1 where mercury recycle and iodine isolation systems are not used. In the Case 2b study, a mercuric nitrate scrubber is added to the dissolver off-gas system and the iodine evolution and iodine isolation systems are installed; consequently, the off-gas from the solvent extraction system is expected to contain a smaller concentration of organic iodides (Sects. 4.3.4, 4.5.1, 4.5.2, and 4.5.3). As a result of these additions and the decrease in organic iodide content, the DF in the off-gas system for all species of iodine will be greater in Case 2b than in Cases 1 and 2a. However, no credit was taken for the decrease in organic iodide content in the analysis of Case 2b, although an additional factor of 10 for iodine removal is assigned to the meruric nitrate scrubber in the dissolver off-gas system. Finally, because the inventories of ^{127}I and ^{129}I are expected to correspond to about 8 days of input, the DF of ^{131}I is assumed to be about twice that of ^{129}I.

4.3.7 *Iodox*[a]

The Iodox process[57-59] is an advanced method for removing elemental iodine and organic iodides, such as methyl iodide, from gaseous effluents. The process is suitable for use either as a primary step for removing the bulk of the iodine from the dissolver off-gas stream or as a polishing unit for removing small amounts of iodine from off-gas streams. The iodine can be isolated as a solid, anhydroiodic acid (HI_3O_8), which is probably suitable for storage in stainless steel cans or for shipment to a waste repository.

The steps in the Iodox system are: (1) oxidation of the iodine species to the soluble, nonvolatile iodate form using 19-21 *M* HNO_3 in a bubble-cap or packed column; (2) concentration of the iodine-bearing nitric acid scrub solution in an evaporator; (3) recycle of iodine-free nitric acid condensate from the evaporator to the plant nitric acid system; and (4) transfer of the iodine–nitric acid concentrate from the bottom of the evaporator to a second evaporator where it is evaporated to dryness to form HI_3O_8. The condensate from the second evaporator is recycled to the first evaporator. The final evaporation to dryness could occur in the waste storage shipping can.

The Iodox process has been successfully demonstrated on a laboratory and small-engineering scale using simulated off-gas containing small amounts of radioactive iodine. Decontamination factors for removal of both elemental iodine and methyl iodide of greater than 10^4 have been obtained by using either (1) a 2.54-cm-diam bubble-cap column containing

[a]Formerly called Iodex.

six plates and with >75% HNO_3 at temperatures >80°C or (2) a 4-cm-diam by 117-cm-high packed column with boiling 70% HNO_3 or 80% HNO_3 at >60°C. The high acid concentration and temperatures are required to decompose organic iodides and to convert the contained iodine to a form that is readily retained (probably elemental iodine). Elemental iodine is retained efficiently at lower acidities and temperatures. In plants in which the high-activity wastes are stored in tanks, the concentrated acid required for the Iodox process would be purchased and the excess acid recycled to the dissolver. This type of operation is reflected in the cost estimates in Sect. 6.0 for the model plant. In plants where the high-level wastes are solidified, the acid is recovered at low concentrations and an extra fractionation system is required to produce the concentrated acid for recycle to the dissolver and Iodox systems. Very little fresh acid would be purchased for this type of plant.

The principal advantages of the Iodox process are: (1) the high removal of iodine achieved for either elemental or organic iodides; (2) the feasibility of handling large amounts (mass) of iodine; (3) no new chemicals are introduced into the system; and (4) conventional processing equipment is used. Disadvantages include: (1) corrosion problems that may require the use of titanium or zirconium equipment as materials of construction; and (2) the requirement for internal plant production of concentrated nitric acid in plants where the high-activity wastes are solidified and nitric acid is recycled.

It should be noted[60] that CO_2 from the burning of graphite will have no effect on the Iodox process. If CO remained in gases contacting concentrated nitric acid, it would be oxidized to CO_2 and some acid would be reduced to nitrites or nitrogen oxides. This oxidation-reduction reaction could upset the Iodox process. However, the base case of this report includes the oxidation of CO to CO_2 before the gas stream enters the off-gas treatment equipment.

Engineering development and a demonstration of the Iodox process in a pilot plant or reprocessing plant with irradiated LWR or HTGR fuel and dissolver solution are required.

4.3.8 *Tritium Retention*

Tritium will be formed in many ways in the HTGR, including by ternary fission in the three fissile particles and in thorium, and by the $^6Li(n,\alpha)^3H$ reaction of neutrons with impurity lithium contained in graphite and in all fissile and fertile materials. Tritium also will be formed to the level of about 16.4 Ci/MTHM from the graphite[a] (at 10.93 MT carbon/MTHM), and from boron poison and from any beryllium impurity in graphite or in the fissile or fertile materials (Tables 4.4 and 4.6). Essentially all of the tritium formed in the graphite or in the 23R and IM particles will be released during primary and secondary graphite burning operations. However, much of the tritium formed in ThO_2 particles will not be released during burning operations, but will be in subsequent dissolving operations. The quantity of tritium formed in ThO_2 particles that is released during burning operations is uncertain. The few measurements reported by Fitzgerald et al.,[61] and by Beaujean et al.,[62] pertaining to mixed UO_2-ThO_2 rather than to pure ThO_2, suggest that 10-20% of this tritium is released. Therefore, up to 35% of tritium formed in the heavy metal may enter the Thorex dissolver; this is 20% of the total tritium formed in the reference HTGR. In order to remove about 99% of the tritium

[a]Tritium is formed from graphite by the following sequence of reactions: (1) $^{12}C(n,\alpha)^9Be$; (2) $^9Be(n,\alpha)^6He$; (3) $^6He \rightarrow {}^6Li + \beta$; (4) $^6Li(n,\alpha)^3H$.

in the thoria particles, it will be necessary to perform an extended "bake-out;" the temperature and time of "bake-out" have not yet been determined accurately. Tritium released during the primary burning operation will be in the form of tritiated water and will be contained in a large volume of gas that is primarily CO_2. Sorption of water from air on molecular sieves is an established technology; in addition, molecular sieves capable of removing water from CO_2 under expected conditions are used commercially[63,64] to dry CO_2. Testing of the applicability of molecular sieves for treatment of primary burner off-gas is a part of the national effort[49] to develop the HTGR fuel cycle.

After separation from residual graphite and thoria, the UC_2 of the 23R and 25R particles, containing tritium, will be freed of the SiC coatings and then burned to convert the UC_2 to UO_2 and U_3O_8. This burning step will also evolve tritiated water which will be amenable to collection on molecular sieves. Tritium release can be made essentially quantitative[61] by roasting, reducing U_3O_8 to UO_2, and then reoxidizing the UO_2 to U_3O_8. It is expected that only trace quantities of tritium will remain in U_3O_8 that reports to the dissolver vessels.

Tritiated water, collected as indicated above, can be stored as water or sorbed on molecular sieves or other desiccants, such as silica gel or alumina,[64] and packaged as a solid in a stainless steel can for storage or shipment to a waste repository. The flow rate of tritiated water will correspond to 92 g ^3H/year (about two grams of tritium per 1000-MWe HTGR per year). This will be diluted with normal water from several sources, as follows: (1) about 260 kg/year from graphitic hydrogen, occluded during manufacture, for which the specification (Table 4.5) of <0.08 std cc H_2/g graphite corresponds to <32 kg H_2/year); (2) about 190 kg/year from water in the oxygen that will be used to burn the graphite, corresponding to a specification of <26.3 ppm by volume H_2O in liquid O_2 measured after vaporization;[65] (3) about 1200 kg/yr from water, at a partial pressure of 0.1 torr, in the approximately 1000 scfm purified CO_2 from the KALC process (Sect. 4.3.9) used to maintain fluidization in the primary burners; (4) in the order of 10,000 to 15,000 kg/year from vapor off-gases expected to correspond to water saturation of 20-25 scfm of purge gas at 100^0F. The quantity of water in item (4) could be reduced by cooling the off-gases. However, this water, and perhaps more, will be needed to ensure high tritiated water retention when molecular sieve is used as a treatment unit.

Engineering development of the "tritium bake-out" method and of equipment for collecting tritiated water from burner off-gas will be performed at the Idaho Chemical Processing Plant or at Oak Ridge National Laboratory during the last half of this decade.

4.3.9 *KALC*

The KALC (*K*rypton *A*bsorption in *L*iquid *C*O_2) process[66-68] was conceived specifically for the removal of krypton from burner off-gas generated in the reprocessing of HTGR fuel elements. The process, which has progressed to the nonradioactive pilot-plant stage of development, and which will be tested in the demonstration operations at ICPP,[49] also has potential for removing other contaminants such as tritium (as tritiated water), iodine, xenon, radon, and particulate matter. In the model plant, average annual concentrations of krypton and xenon in the burner off-gases will be 10 and 50 ppm by volume, respectively, at a total gas flow of 2000 cfm (Sect. 4.5.1).

The KALC process requires that the feed gas be predominantly CO_2 plus, perhaps, no more than about 10% of light gases such as O_2, N_2, CO. As a result of water vapor that originates to a great extent from the dissolver purge, the average partial pressure of water in the off-gas reporting to the off-gas treatment system will be about 0.5 torr (about 650 ppm by volume or 270 ppm by weight). About 80% of this tritiated water (ice has a vapor pressure of about 0.1 torr at -40°C), a significant fraction of iodine-containing compounds, and particulate matter will be removed from the gas in an initial (precooler) trapping operation to avoid unnecessary loading of these into the absorber tower. The cold gas from the trap (containing about 100 ppm H_2O and very little iodine or particulate matter) will be compressed and scrubbed with clean liquid CO_2 in an absorber tower above, and connected to, a fractionation tower through a condenser. A reboiler below the fractionator provides vapor which serves to fractionate the very low boiling species O_2, N_2, and CO from krypton and other higher-boiling-point species, such as Xe and Rn, producing a liquid CO_2 stream containing the noble gases and only small amounts of the light gases. This liquid stream is fed to a stripper-rectifier system from which is obtained an overhead stream containing most of the noble gases and a raffinate that is nearly pure CO_2. The raffinate is partly discharged to the atmosphere, partly recycled for use as scrub liquid at the top of the absorber column, and partly recycled to the fluid-bed burner as needed to fluidize the graphite-fuel particles.

In order to obtain a decontamination factor for krypton from the burner off-gases of several hundred and a concentration factor in the order of 10^3, the absorber should have at least 22 theoretical stages, the stripper at least 14, and the rectifier at least 6. The scrub rate must be at least 20 times the feed rate when the feed contains as much as 10% light gases. Operation of the absorber-fractionator will probably be most effective at 20 atm pressure, and that of the stripper at 15 atm or less. The analysis of the KALC system by Whatley[67] also indicates that close control of the fractionator-reboiler vapor rate will be required.

Many variables and potential operating problems of the KALC process need to be examined prior to testing at the ICPP. These include the effects of nitrogen oxides, methyl iodide, and other possible gaseous impurities, such as SO_2 formed from impurity sulfur in the graphite. Study of the effects of intense radiation from ^{220}Rn and its daughters, such as decomposition of CO_2, must await operational testing at ICPP.

4.3.10 *Caustic Scrubbers*

Caustic scrubbers have been studied in small-scale experiments and are used extensively in reprocessing plants and other nuclear installations to remove iodine, nitrogen oxides, and semivolatile elements, such as ruthenium (as RuO_2 or RuO_4), and particulate matter from gaseous effluents.[69,70] Decontamination factors as high as 10^2 to 10^4 have been achieved for I_2 and HI. Caustic scrubbing can remove a large fraction of the ruthenium from gaseous effluents. About 99% of the ruthenium was removed from the off-gas leaving the scrubber prefilter in pilot plant tests of the solidification of high-level radioactive waste.[70] These caustic scrubbers are probably less effective for removing organic iodides or particulate matter than they are for removing I_2 or HI. It has been suggested that the volatile species from alkaline

solutions is HOI or a compound in equilibrium with it.[71] However, the chemistry and the performance of HOI are largely unknown. The reasons for the relatively poor performance of large scrubbers at Idaho and Hanford (i.e., approximately 70% and 90% removal of iodine, respectively) are unknown. The low concentrations of iodine in the gas phase, that is, 1×10^{-3} micrograms of I_2 per cubic foot, could be a factor at Hanford. (Concentrations have not been reported at Idaho.) Tests of the caustic scrubber for the Oak Ridge Research Reactor showed a removal efficiency of 99%, with an inlet iodine concentration of 15 micrograms/ft^3. Other factors are the unknown amounts of particulate matter and organic iodides present. No reports which relate the efficiencies or kinetics of caustic scrubbing to irradiation rate, concentration of iodine in both phases, concentration of caustic, temperature, and contacting efficiency have been found in the literature. The use of additives with the caustic to reduce iodine and iodate to iodide increases the removal efficiency for iodine. Thiosulfate is a commonly used reductant. The removal efficiency of the Idaho system increased from 90 to 97% when the caustic contained thiosulfate.[72]

4.3.11 *Adsorption on Charcoal or Macroreticular Resins*

Solid sorbents have been used in laboratory studies to remove radioactive iodine from water and acid solutions with high efficiency. More than 99.99% of the iodine was removed from water containing 1×10^{-6} M I_2 by passing it through a 4-in.-deep bed of coconut charcoal.[73] Charcoal is not effective in removing iodine from acidic solutions.

Macroreticular resins sorb iodine efficiently from water or acidic solutions.[74,75] These resins are hard, insoluble beads of porous polymer. They have discrete pores ranging from 50 to 200,000 Å and are available in a wide range of surface polarities. Macroreticular resin XAD-12 (Rohm and Haas Company) sorbed approximately 99.4% of the iodine from water, a slightly lower efficiency than that obtained with charoal under comparable conditions. However, the sorbed iodine could be removed from the resin with thiosulfate solution and the resin could be reused while still maintaining the high iodine removal efficiency. Macroreticular resin XAD-4 is also effective for removing iodine from nitric acid solutions. Removal efficiencies of about 99% were obtained when treating 3 M HNO_3 solution that contained 5×10^{-4} M I_2.

4.3.12 *Conversion of Carbon Dioxide to Calcium Carbonate*

Removal of CO_2 from air, petroleum, and other gas streams has been a commercial operation for many years. This operation at the fuel reprocessing plant will differ somewhat from these commercial operations with regard to the CO_2 content of the gas, namely about 90% at the reprocessing plant vs less than 10% in most commercial processes. Two scrubbing processes are in use in industry: (1) one based on sodium hydroxide solution; (2) one based on a calcium hydroxide, $Ca(OH)_2$, slurry. Sodium carbonate solution is the product of the first process; addition of $Ca(OH)_2$ to this solution causes $CaCO_3$ to precipitate. The precipitate can be removed by filtration, leaving a sodium hydroxide solution for recycle. The second process, based on calcium hydroxide slurry, produces $CaCO_3$ directly. Croff[76] has concluded that the

process based on the one-step reaction of CO_2 with a slurry of $Ca(OH)_2$ is, overall, the most advantageous process.

4.4 Selection of Case Studies

Several conceptual cases and the corresponding flowsheets were prepared for treating the radioactive liquid and gasborne effluents. Case 1 represents the base cost, current treatment case. In each succeeding case, equipment is added to accomplish a specific objective in reducing the release of radioactive material (Table 4.10). The efficiency of a treatment system or plant for retention of radioactive material is expressed as a decontamination factor (DF), i.e., the ratio of amount of material entering the plant to that released to the environment. Relative to Case 1, the retentions of radioactive material achieved in the succeeding cases are increased by the following factors: Case 2a, an increase in the DFs for ^{129}I and ^{131}I from 20 and 60, respectively, to 500 and 3000, respectively, by adding a bed of macroreticular resin or an ion exchange unit to hold up and remove iodine before the final evaporator used to discharge water to the atmosphere; Case 2b, a further increase, with respect to Case 2a, in the DFs of all iodine species by adding an $Hg(NO_3)_2$-HNO_3 scrubber in the dissolver off-gas lines and by extensive evolution of iodine from the dissolver solutions; Case 2c, further DF increases for ^{129}I and ^{131}I with respect to Case 2a by installing Iodox process equipment in place of the $Hg(NO_3)_2$-HNO_3 bulk iodine scrubbers; Case 2d, similar to Case 2b, but replacing the mercuric nitrate-nitric acid scrubbers by cadmium zeolite; Case 3, a DF of 10 for semivolatile matter and particulates, including plutonium and uranium, due to installing a sand filter in the ventilation ducts upstream of the plant stack; Case 4, a DF of 10^2 for tritium by installing the "bakeout process" and a moleular sieve bed to sorb tritiated water from all off-gases; Case 5, reduce all gasborne activity, except ^{14}C and tritium, by 100 by installing the KALC process [the overall plant DF for tritium is only 3 since up to 35% of this nuclide may report to the Thorex dissolver, from which it will later be discharged to the atmostphere, and as much as 20% of that which reports to the KALC system may not be retained[a] (Sect. 4.3.9)]; Case 6, reduce ^{14}C releases, relative to Case 5, by converting the CO_2 to $CaCO_3$ and fixing the latter in concrete prior to shipping to a burial ground. Case 7 is based on a combination of features from Cases 2c through 6.

Each case represents the probable limit of retention obtainable with existing and presently projected technology. With the exception of Case 2, additional parametric studies within a given case appear impractical since the cost for treatment systems to achieve lower retentions would be about the same as those cited. The treatment units contained in Cases 2 through 6 can be added to Case 1 independently or cumulatively for assessment of environmental impact or cost calculations. Generally, Case 1 represents current technology, and Cases 2 through 6 represent technology that may be applied in the next two decades of plants which are designed using contemporary concepts for management of process and ventilation gases and process liquids. Case 7 represents a cumulation in which extensive changes in the present concepts for effluent management are required. Much of the technology used in the advanced cases is in an early stage of development and is not suitable for use in the base case reprocessing plant design.

---

[a]However, retention of additional H_2O as a result of its dissolving in liquid CO_2 has not been factored into this analysis.

Most of the treatment systems used in this study are similar to those used, or proposed for use, in the LWR fuel reprocessing industry. The remaining systems are extrapolations from existing systems or are in the pilot plant or small-engineering scale of development. The reasons for choice of these systems, along with technical descriptions of their functions and stage of development, are given in Sect. 4.3.

4.5 Descriptions of Case Studies and Calculation of Source Terms

Descriptions of the case studies for decreasing the releases of radioactive materials from the model fuel reprocessing plant are presented in the following sections. The assumptions used in the case studies are presented in Table 4.10, the calculated source terms in Table 4.4, and the flowsheets in Figs. 4.5-4.14. Details of equipment changes used to reduce releases of iodine, Cases 1, 2a-2d, are listed in Table 4.11.

4.5.1 *Case 1*

Case 1 is the "base case" for the model HTGR fuel reprocessing plant; it is shown schematically in Fig. 3.1 and in more detail in Fig. 4.5. It represents concepts that are currently (1975) believed to apply to solvent extraction phases of LWR fuel reprocessing plants and that will apply to head-end operations of the HTGR fuel reprocessing plant by the early 1980s. The selection of assumptions used to calculate the source term in this case is particularly important since the improvements presented in succeeding cases are incremental with reference to the base case. The background information available to substantiate the estimates of the amounts of various types of radioactive materials that will be released from the model plant is not extensive. It has been assumed that the limited experience established in private LWR fuel-reprocessing industry pertaining to the Purex process can be applied to the Acid-Thorex process and that radioactive emissions from the head-end burning steps of the HTGR fuel reprocessing plant can be controlled within desired limits. Consequently, it is assumed that emissions from the base Case 1 HTGR fuel reprocessing plant will be similar to those expected from a comparable plant for reprocessing LWR fuels.[2] Estimates of the amounts of radioactive materials released are based on experience at the Nuclear Fuel Services (NFS) LWR plant (Table 4.12); on models developed from data obtained at USNRC facilities;[77] on environmental reports for the three commercial LWR fuel reprocessing plants, NFS, Midwest Fuel Reprocessing Plant (MFRP), and the Barnwell Nuclear Fuel Plant (BNFP);[5,78,79] on environmental statements for MFRP and BNFP;[43,44] and on other analysis and development programs.[80,81] Plant retention factors from some of these reports are summarized in Table 4.13.

Graphite Burner System. - Fuel-block graphite and fuel particle coating carbon will be removed from HTGR fuel in two burning operations, primary and secondary, as shown in Fig. 4.5. These burning operations are still in the developmental stage. Although fluidized-bed burning (FBB) is presently preferred, the whole-block burning process (WBB) probably will be competitive from an economic standpoint.[4] Additional analyses and experiments are needed to determine whether one method or the other has technical advantages.

If the graphite associated with the fuel blocks received at the 450 MTHM/yr model fuel reprocessing plant is converted to CO_2 and CO [10.93 MTC/MTHM is the lifetime average for the reference 1000-MW(e) HTGR], the average flowrate of these gases[a] at 70^0F and 1 atmosphere pressure during 300 days of operation would be about 810 cfm (about 3.5×10^8 cf in 300 days). There will be some nitrogen and unburned oxygen in the burner off-gases, in which case the flowrate would be in the order of 1000 cfm. This flow is unlikely to be adequate to fluidize the graphite fuel particles.[4] For this reason, CO_2 is added, as fresh gas or as recycle gas if the KALC process is used (Sect. 4.3.9), to the burner inlet-gas to the extent of about 1000 cfm, to increase the total flow to about 2000 cfm.

During a year's operation, there will be produced and retained in the burners about 5 metric tons of ash, calculated as metal oxides, Table 4.9, from impurities in the graphite. This ash plus carbon soot plus some heavy metals and fission products from the fertile thorium particles plus heavy metals, fission products, and silicon carbide from broken fissile particles constitute the solids which must be retained within the primary burners. As noted in the study by Snider and Watkin,[4] this will be accomplished with pulsed-blowback sintered metal filters.

The efficiencies of sintered metallic filters for removing solids from hot gas streams have been the subject of hot-cell studies[82–84] pertaining to burning graphite-based HTGR fuels; in addition, there is experience[85] in the UF_6 production industry in the use of sintered metallic filters to remove solids from hot gas streams. Efficiency is a function of a number of variables, including gas temperature, particle size, pore-size distribution in the filter, and the care used in mounting the filters. The hot-cell studies[82–84] have demonstrated solids decontamination factors by a single sintered metallic filter of 10^3 and higher; in some tests the DFs were in the range of 10^6. Nuclides for which these data apply include ^{95}Zr, ^{95}Nb, ^{106}Ru, ^{134}Cs, ^{137}Cs, and ^{144}Ce. Industrial experience has shown DFs by two filters to be greater than 10^3.

As a result of this analysis, it is estimated that the DF for particulates across the sintered metal filters on the primary and secondary burners will be, conservatively, 10^3, and that a second filter, probably a HEPA filter located downstream from the off-gas coolers, will provide an additional factor of at least 10^2. Within the primary burner, the yearly ash burden from impurities in the graphite [5 MT in about 8×10^8 ft^3 or 2×10^7 m^3] corresponds, approximately, to 0.25 g/m^3; the ash burden on the downstream side of the sintered metallic filter–absolute filter combination will be in the range 2.5 micrograms/m^3. This contains about 0.25 microcuries/m^3 (from Table 4.4) as the contribution from impurities in the graphite to the particulate activity downstream from the burner filters, excluding the contribution of phosphorus (about 0.005 microcuries/m^3), which may be present as phosphates, and excluding sulfur, which is assumed to be in the form of gaseous SO_3. Activities due to particulate matter from broken fissile and fertile particles will be much greater than those from activation products of impurities in graphite. On the basis of breakage of 10% of fissile and fertile particles, particulate activity from this source could be as high as 4×10^8 Ci/yr (from Table 4.4), corresponding to 200 microcuries/m^3 on the downstream side of the sintered metallic filter–absolute filter combination. This analysis suggests that particulate activity downstream from the burner filters due to broken fissile and fertile particles will be in the order of 10^3 times that due to activation products of impurities in graphite. Possible differences in particle size from the two sources, and, therefore, possible differences in the degrees to

[a]Conversion of any CO to CO_2, perhaps by catalytic oxidation, is part of the base case.

which these particles penetrate filters, have not been considered.

In addition to a small burden of particulate matter, it is estimated that burner off-gases will contain about 75% of the tritium (as tritiated water), all the ^{14}C (as $^{14}CO_2$), and the noble gases. About 25-30% (an average of the range of values mentioned in Sect. 4.3.8) of the tritium will enter the leachers or dissolvers.

Fuel Dissolving and Leaching System.- Leaching and dissolving operations will be sources of gaseous radioactive nuclides and the most important origins of aerosols in the off-gas system. The aerosols will contain a complete spectrum of fission products. The Thorex reagent [13 *M* HNO_3, 0.04 *M* HF, 0.1 *M* $Al(NO_3)_3$][9] will be used to dissolve all thorium oxide plus materials in the 23R stream. (However, the 23R uranium could be processed separately according to a Purex-like flowsheet.) These two streams will contain more than 95% of the heavy metal and major portions of the various fission products. Thorex reagent will also be used to leach residual ThO_2 from the 25R particles, before these are sent to crushing and secondary burning, and from 25W particles, before these are sent to storage (Fig. 4.5). Finally, after crushing the SiC coating and secondary burning, the particles of the 25R stream will be leached with nitric acid. Less than 5% of the heavy metal (U+Th) will be so treated.

Dissolving operations with Thorex reagent have been conducted on a hot-cell scale[82] and on a pilot-plant scale.[86] Dissolving uranium oxides from LWR fuels with nitric acid has been performed on larger scales for many years at Hanford, Savannah River, Idaho, and the NFS plant. The primary difference between such operations and those to be performed in the HTGR fuel reprocessing plant will be the presence of silicon carbide in the latter case.

Dissolving U_3O_8 probably will lead to the formation of nitrogen oxides[87,88] although uranium dioxide[87] and uranium metal[89] can be dissolved without formation of these oxides by the addition of molecular oxygen. When nitrogen oxides are formed, the overall chemical reaction may be

$$2U_3O_8 + 14HNO_3 \rightarrow 6UO_2(NO_3)_2 + NO + NO_2 + 7H_2O \ .$$

However, the ratio NO/NO_2 is a function of the concentration of nitric acid. Since these oxides may be formed, an NO_x "absorber" has been included in the flowsheets, Figs. 4.5-4.14. A candidate for this unit operation[90,91] involves the addition of ammonia, NH_3, and a catalyst to accelerate reactions such as

$$3NO_2 + 4NH_3 \rightarrow 6H_2O + (7/2)N_2 \ .$$

This formation of water will further increase the likelihood that the dissolver sparge gases will be saturated with water.

Iodine. - Iodine will travel somewhat different paths in the HTGR fuel reprocessing plant than it does in a LWR fuel reprocessing plant. Excluding small quantities that may leak from defective fuel blocks, the first release of this element will be in the crushing equipment, from fractured fuel particles. The first large release of iodine will be in the primary burners. Experimental measurements on release of iodine during burning are few in number. Beaujean et al.[62] give a value of 30-50% released from carbide fuels, such as UC_2, which undergo phase and volume changes during burning and conversion to U_3O_8, but only 3-5% from mixed $(Th,U)O_2$,

which does not have a significant change in volume during burning. Laboratory studies of iodine release are now in progress in the United States,[92] and this will be one of many variables measured at the ICPP.[49] On the basis of the work of Beaujean et al.,[62] most of the iodine in the thorium fertile particles is expected to report to the Thorex dissolver. Extended roasting of these particles in a "tritium bakeout" step to induce transfer of tritium to the gas phase may increase the quantity of iodine that leaves the ThO_2 particles and enters the burner off-gas stream. Burning of the 23R and 25R particles may lead to transfer of 30-50% of the contained iodine to the gas phase and of somewhat more than 50% reporting to the Thorex and Purex dissolvers, respectively.

Downstream from the burning operations, much of the technology developed for use in the LWR fuel reprocessing industry will apply to the HTGR fuel reprocessing plant. Yarbro[93,94] has summarized these data as they apply to the Barnwell Nuclear Fuel Plant, which was used as a model for some of the aqueous-phase processes of Case 1, Table 4.11, as follows: (1) greater than 90% of the iodine in the fuel entering the dissolvers should vaporize and report to the off-gas treatment systems, which, conservatively, will provide iodine retention factors in excess of 10^3; and (2) most of the remaining 10% of the iodine will follow the liquid waste through the acid recovery system to the Iodine Removal Partial Evaporator, Fig. 4.5.

Values of several other parameters must be specified to provide a complete description of the iodine treatment system, as noted in Fig. 4.15. First, iodine will be recycled from the Concentrated Miscellaneous Waste Tank (CMWT) to the Thorex process off-gas during sparging. If the concentrated waste is accumulated for the 30-year life of the plant, then the lifetime average quantity of iodine (^{127}I + ^{129}I) recycled will be about 100 g-atoms/day, and the maximum rate at the end of 30 years will be about 200 g-atoms/day, on the basis of the following data: the purge rate[42] will be 300 cfm for a 300,000-gal tank (the purge gas will be CO_2 in the HTGR fuel reprocessing plant); 3200 g-atoms of iodine are received at the reprocessing plant per year (Table 4.4, excluding that in the 25W stream); the iodine distribution coefficient, C(liquid)/C(vapor), in the alkaline waste will be about[95] 5000. The lifetime average iodine recycle rate in this case is, therefore, about 10 times the rate of receipt of fresh iodine. The purge rate and distribution coefficient correspond to recycle, per day, of 0.216% of the lifetime average iodine content of the CMWT. The amount of ^{131}I received in 160-day-cooled fuel is about 2 Ci/day (365-day year) and the steady-state activity in the CMWT about 23 Ci (2 Ci/day x 8.05-day half-life/ln 2). Recycle of this nuclide on the above bases will be 0.05 Ci/day.

Four other parameters important in a description of the iodine retention, Figs. 4.5 and 4.15, are: (1) the quantity of iodine collected in the $Hg(NO_3)_2$-HNO_3 scrubber of the off-gas system that is transferred to the miscellaneous waste system; (2) the "age" of iodine at various points of the process; (3) the iodine decontamination factor in the MLW evaporator; and (4) the decontamination factor across the Iodine Removal Partial Evaporator. In Case 1, all iodine collected in the $Hg(NO_3)_2$-HNO_3 scrubber is discharged to the MLW system, its age is estimated to be about 8 days (Fig. 4.15), the DF of the MLW evaporator is estimated to be 100, and the DF of the partial evaporator is estimated to be 4 for all iodine species. The 8-day "age" of iodine in the $Hg(NO_3)_2$-HNO_3 scrubber is equivalent to the DF for ^{131}I being twice as large as that for ^{127}I or ^{129}I.

Calculations pertaining to release of iodine isotopes in all case studies are based on the following:

DF(l,v,e) = equipment decontamination factor[39] of the first iodine-removal unit in the off-gas system;

DF(l,v,t) = the additional decontamination factor of the first iodine-removal unit in the off-gas system due to holdup and radioactive decay;

DF(2,v,e) = equipment decontamination factor of the second iodine-removal unit in the off-gas system;

DF(2,v,t) = the additional decontamination factor of the second iodine-removal unit in the off-gas system due to holdup and radioactive decay;

DF(1,l,e) = equipment decontamination factor of the first iodine-removal unit in the liquid stream;

DF(1,l,t) = the additional decontamination factor of the first iodine-removal unit in the liquid stream due to holdup and radioactive decay;

DF(2,l,e) = equipment decontamination factor of the second iodine-removal unit in the liquid stream;

DF(2,l,t) = the additional decontamination factor of the second iodine-removal unit in the liquid stream due to holdup and radioactive decay;

DF(3,l,e) = equipment decontamination factor of the third iodine-removal unit in the liquid stream;

DF(3,l,t) = the additional decontamination factor of the third iodine-removal unit in the liquid stream due to holdup and radioactive decay [this might be as large as 10^3 (80-day holdup) since the iodine content of the feed to the Iodine Removal Ion Exchanger will be very low, perhaps in the range (60 mCi ^{131}I/day)/(>10,000 liters/day), or <6 μCi ^{131}I/liter];

F = the fraction of iodine that is trapped in the first iodine-removal unit in the off-gas system that is discharged to the Neutralization Tank;

F(l) = the ratio (quantity of iodine isotope discharged from the plant daily in vaporized water from the liquid stream)/(quantity of the isotope received daily at reprocessing time);

F(v) = the ratio (quantity of iodine isotope discharged from the plant daily in off-gas)/(quantity of the isotope received daily at reprocessing time);

f_v = fraction of iodine entering the dissolver (in fuel) that is vaporized;

$f_l = 1 - f_v$

$f^* = f_l$ + combination of other terms, as noted below;

G = the fraction of iodine in the fuel that reports directly to the gas phase during burning operations;

N_1 = inventory of ^{129}I in the Concentrated Miscellaneous Waste Tank, in units of days of feed of ^{129}I to the plant, 1 unit = 1 day,

N_2 = inventory of ^{131}I in the Concentrated Miscellaneous Waste Tank, in units of days of feed of ^{131}I to the plant. $N_2 = 8.05/\ln 2 = 11.6$ days inventory at steady state;

R = the fraction of the inventory of iodine in the Concentrated Miscellaneous Liquid Waste Tank that is recycled per day.

It should be noted that the decontamination factor for a particular nuclide in a specified unit of equipment is given by

$$DF(i,l) = DF(i,l,e) \times DF(i,l,t) \tag{4-4a}$$

and

$$DF(i,v) = DF(i,v,e) \times DF(i,v,t) \tag{4-4b}$$

Using the definitions given above, the fraction of ^{129}I leaving the fuel reprocessing plant in the off-gas stream in any of the case studies is given by

$$F(v) = [RN_1 + G + (1 - G)f_v]/DF(1,v)/DF(2,v) \ . \tag{4-5}$$

The corresponding equation for ^{131}I has the same terms except that N_2 replaces N_1; in addition, numerical values of DF(1,v) and DF(2,v) differ for the two isotopes because the radioactive decay of ^{131}I is important while that of ^{129}I is not, in terms of the quantity of each discharged to the environment.

Calculations of the quantities F(l), of iodine isotopes leaving the plant in vaporized water, are more complicated than F(v) because of recycle in the liquid stream. These complications may be seen in Fig. 4.15. From material-balance considerations, F(l) for ^{129}I is given by

$$F(l) = \frac{F[RN_1 + G + (1 - G)\, f_v]\ [DF(1,v,e) - 1]/DF(1,v) + (1 - G)\, f_l DF(1,l)}{[DF(1,l)\, DF(2,l) - DF(2,l,e) + 1]\ DF(3,l)} \ . \tag{4-6}$$

A similar equation applies to ^{131}I. Equation (4-6) includes the effects of (1) transfer of some of the iodine from fuel particles to the vapor in the burners, G; (2) incomplete transfer of iodine from dissolver to dissolver off-gas, f_v; (3) buildup of iodine inventories in the Concentrated Miscellaneous Waste Tank, N_1 for ^{129}I and N_2 for ^{131}I; (4) continuous or intermittent sparging or purging of the solution/slurry in the Concentrated Miscellaneous Waste Tank and the associated recycle of iodine, R; and (5) transfer of part or all of the iodine collected in the primary iodine sorber of the off-gas stream to the liquid stream, F.

Values of all of the variables used to calculate F(v) and F(l) are listed in Table 4.11 for all case studies, Case 1 and Cases 2a-2d.

The quantity R depends on the rate of sparging the Concentrated Miscellaneous Liquid Waste Tank and on the completeness of filling this tank. If it is assumed that the iodine concentration in the sparge gas is in equilibrium with the iodine concentration in the solution, then for a sparge rate of 300 cfm[42] through 300,000 gal of solution with a distribution coefficient[95] of (1 unit I/ft^3 sparge gas)/(5000 units I/ft^3 solution),

$$R = 1440\ (\text{min/day}) \times 300 \times 7.5\ (\text{gal/ft}^3)/300{,}000/5000$$

or

$$R = 2.16 \times 10^{-3}/\text{day}.$$

This is the maximum expected value of R which, however, may be significantly less than 1×10^{-3}/day. Using $R = 2.16 \times 10^{-3}$/day, the 30-year lifetime average operational life of 4500 days, and other variables from Table 4.11, Eq. (4-5) for ^{129}I becomes

$$F(v) = [2.16 \times 10^{-3} \times 4500 + 0.4 + 0.6(0.9)]/10^2/10^2 = (9.72 + 0.94)/10^4 = 1.07 \times 10^{-3}$$

As noted above, the quantity of recycled ^{129}I, 9.72 units, exceeds the quantity of fresh ^{129}I, 0.94 units, by a factor of 10 or more in this calculation; this corresponds to a reduction of the effective DF(l,v,e) from 10^2 to 10. The value of F(v) entered in Table 4.11 was rounded to 1.1×10^{-3} for ^{129}I.

The fractional release of ^{131}I in the vapor is much less than the release of ^{129}I because the inventory, N_2, in the Concentrated Miscellaneous Waste Tank never exceeds about 11.6 days of input because of radioactive decay. For ^{131}I

$$\begin{aligned} F(v) &= [2.16 \times 10^{-3} \times 11.6 + 0.4 + 0.6(0.9)]/2 \times 10^2/10^5 \\ &= (2.51 \times 10^{-3} + 0.94)/2 \times 10^7 = 4.83 \times 10^{-8} \end{aligned}$$

This value of F(v), entered in Table 4.11 as 4.8×10^{-8}, includes a factor of 10^3 for ^{131}I decay in the AgZeO unit with a holdup time of at least 80 days.

Calculations of F(l) for ^{129}I and ^{131}I in Case 1, using Eq. (4-6) and the parameters listed in Table 4.11, are as follows:

$$^{129}I: \quad F(l) = \frac{(1)[9.72 + 0.4 + 0.54](99/100) + 0.6(0.1)(100)}{[100 \times 4 - 4 + 1](1)} = 4.17 \times 10^{-2}$$

$$^{131}I: \quad F(l) = \frac{(1)[2.51 \times 10^{-3} + 0.4 + 0.54](99/100) + 0.6(0.1)(100)}{[100 \times 4 - 4 + 1](1)} = 1.63 \times 10^{-2}$$

Tritium, Carbon-14, and Krypton. - Tritium, primarily as tritiated water, ^{14}C, primarily as carbon dioxide, and krypton, including ^{85}Kr, will be released quantitatively to the atmosphere in the Case 1 study. Consequently, the plant DF for these nuclides is 1.

The quantity of tritium that will report to the fuel reprocessing plant is uncertain. The source term for this nuclide in Table 4.4 is based on several assumptions, one being that the quantity of lithium in the graphite will be 0.05 ppm, as listed in Table 4.5. This quantity of lithium, which will contribute about 7.4 x 10^4 Ci ^3H/yr, is the upper limit of the range 0.005 to 0.05 ppm mentioned by Compere et al.[96] Thus lithium would contribute 7.4 x 10^3 to 7.4 x 10^4 Ci ^3H/yr. Dyer et al.[97] report 0.004 ppm Li in element E06-01 from the Peach Bottom Unit 1 reactor. In efforts to improve the accuracies of determining lithium in reactor-type graphite, six companion samples were analyzed at General Atomic Company[98] by atomic absorption spectroscopy and at Oak Ridge National Laboratory[99] by isotopic dilution and spark mass spectroscopy. Values of less than 0.05 ppm[98] and less than 0.005 ppm[99] were reported by GAC and ORNL respectively.

A second source of tritium is lithium in uranium and thorium. The present estimate of 2 ppm Li in each of these materials, Table 4.5, corresponds to a lifetime annual average quantity of 2.72 x 10^5 Ci ^3H/yr (Table 4.4). In addition to tritium from ternary fission, there is still another source of tritium not included in Table 4.4, namely that due to the $^3He(n,p)^3H$ activation reaction. Compere et al.[96] have estimated that about 2200 Ci ^3H will be produced from this reaction in a reactor with Fort St. Vrain characteristics during 6 years and that about 1050 Ci of this (about 1/2) will be bound to the core graphite. The 1000-MWe HTGR used as a reference in this report has about three times the power of the Fort St. Vrain reactor, but fuel blocks will be removed after about 4 years. Thus, the graphite fuel blocks of the reference reactor could add about 2000 Ci ^3H/yr to the fuel reprocessing plant throughput due to the $^3He(n,p)^3H$ reaction.

The source term, Table 4.4, also is based on the assumption that all ^3H formed in the HTGR graphite and fuel will report to the fuel reprocessing plant. This assumption may be conservative, although no data yet exist on the release of tritium from large HTGRs. The extent of coating breakage in the reactor is expected[100] to be less than 0.5%. Some analyses[101,102] are based on releases of tritium at the reactor being very small; however, there are some questions[103] concerning such an interpretation of experimental data.[104]

Radon. – Of the radon isotopes present in HTGR fuels, only ^{220}Rn is produced in large quantities; ^{222}Rn is produced in much smaller quantities. A precursor of ^{220}Rn is ^{232}U, which decays with a half-life of 72 years and which is formed according to three important reactions, Table 4.8 and Fig. 4.4, involving ^{230}Th, ^{232}Th, and ^{233}U. As may be seen from Table 4.8, ^{230}Th is a major source of ^{232}U; as the ^{230}Th content of the fertile thorium increases from 0 to 100 ppm, the steady-state concentration of ^{232}U in the 23R stream increases from 309 to 940 ppm for a one-year recycle time. Thorium-232 has a half-life of 1.4 x 10^{10} years; this nuclide is the only isotope of thorium that could still exist naturally in the absence of a precursor. Thorium-230, with a half-life of only 7.7 x 10^4 years, exists in thorium-uranium ores because it is formed from decay of ^{234}U, of 2.44 x 10^5-year half-life, which, in turn, is indirectly formed by decay of 4.47 x 10^9-year half-life ^{238}U. Thus, the ^{230}Th content of thorium depends upon the U/Th ratio of the ore. Overstreet et al.,[105,106] Staatz and Olson,[107] and Staatz,[108] among others, have reported on many of the thorium ores in the United States; some data have been

presented, as in refs. 105 and 106, on thorium and uranium contents. Rosholt[109–111] has described methods for determining the sources of natural radioactivity in these ores and for calculating the quantities of ^{230}Th, and its decay products, from the U/Th ratio. More recently,[112] Guimond and Windham have reported on the existence of secular equilibrium between ^{238}U and its decay products, at least down to ^{226}Ra and including ^{230}Th, in phosphate ores. Using the latest values of decay constants, Rosholt[111] estimates 16.15 ppm ^{230}Th in ^{232}Th for a ratio U/Th = 1 in the case of secular equilibrium. The U/Th ratio is typically in the range 1/1600 in thorite-vein ores, corresponding to about 0.01 ppm ^{230}Th; however, the ratio in common sources of thorium, such as Canadian uranium ores, is in the range 0.16, corresponding to 100 ppm ^{230}Th. These latter sources, in which thorium is obtained as a byproduct, are the most economical; they are expected to be the primary sources of thorium. In this analysis a value of 100 ppm ^{230}Th was chosen although initial HTGRs will probably operate with thorium containing only 5 to 10 ppm ^{230}Th. It is estimated that the lifetime average ^{232}U content in the 23R stream will be in the order of 750 ppm if the thorium contains 100 ppm ^{230}Th. Since the precursors of ^{220}Rn will be a "semi-permanent" part of both the thorium and 23R streams, this nuclide will be generated in slowly decreasing amounts for approximately 10 half-lives, or 700 years, of ^{232}U. For fuel containing 750 ppm ^{232}U in the 23R stream and 100 ppm ^{230}Th in the thorium, the quantity of ^{220}Rn present in 450 MTHM is (Table 4.4 footnote) 1.39 x 10^5 Ci; this is renewed at the rate of 8.0 x 10^{10} Ci/year (see Sect. 4.2.1). The short half-life (55.6 seconds) of this nuclide assures that 75% or more of it will decay on its way to the top of the discharge stack. However, for a stack of only 100-m height and a ventilation flow of about 300,000 cfm, it will be necessary to provide a positive holdup of ^{220}Rn equivalent to a DF of 10^5 to 10^6. The value 10^5 would make the discharge hazard about the same as that due to ^{85}Kr; a value of 10^6 can be achieved by incorporating a holdup time of about 20 minutes for all off-gases (in the order of 2000 cfm from the burners plus smaller amounts of vessel purge gases) from the thorium and 23R streams. Such a holdup is included in the base case, thereby providing a DF of 10^6 for ^{220}Rn. The method to be used to achieve 20-min holdup is not specified. Possible methods include a gas-retention tank operated at atmospheric pressure, or greater, and retention by adsorption on charcoal. There will be much smaller, but not negligible, quantities of ^{222}Rn discharged, as noted in Table 4.4.

Particulates. – Particulate matter will enter off-gas streams from the head-end burn-leach operations and from the various operations associated with solvent extraction, waste treatment, and loadout of uranium. Particulate matter will also enter the ventilation as dust from cell and operating spaces. This dust will carry some radioactivity as a result of leakage of process solutions. There are no data on a production-plant scale to serve as a basis for estimating quantities of particulates that will enter off-gas streams from the head-end operations. However, Vaughen et al.,[82] in hot-cell studies of burn-leach operations, report nonvolatile fission product decontamination factors of 10^5 or greater across a micrometallic filter of nominally 20-micron pores. Decontamination factors for nuclides, such as ^{106}Ru, ^{125}Sb, and ^{137}Cs, that were more volatile at burner/filter operating conditions, were in the range 10^3 to 10^4. A backup filter was reported to remove all the particulate matter that passed through the micrometallic filter. The efficiency of the latter was reported to increase as its temperature decreased in the range 500 to $<200^0$C.

Particulate release data for the Nuclear Fuel Services LWR fuel reprocessing plant are assumed to provide upper limits to the release fractions, or lower limits to decontamination factors, of particulates from solvent extraction and related operations. Release data for the NFS plant (Table 4.12) for the years 1969 and 1970 indicate plant DFs of 5×10^8 and 3×10^8, respectively, and an overall average of 10^8 for the years 1966 to 1971. It has been estimated in a theoretical analysis of particulate release[77] that, if the radioactive solutions in the plant contained 300 g of LWR fuel per liter (typical of LWR dissolver and accountability tanks, which contribute significantly to the off-gas) and had a specific gravity of about 1.2, the concentration of fuel in the effluent gas from the filters would be 0.3×10^{-12} metric tons of fuel per cubic meter of air. This corresponds to a DF of about 10^8 based on a filter efficiency of 99.98%, a plant capacity of 1 MT/day, and a 1000-cfm off-gas rate. This value is consistent with the estimates for the new LWR fuel reprocessing plant at Barnwell.[5,44]

An overall DF of 5×10^8 has been selected for most nuclides appearing as particulates in the base Case 1. This is the same as used in the study of the LWR fuel reprocessing plant.[2] This factor includes contributions of two HEPA filters, in series, downstream from the final off-gas treatment equipment, Fig. 4.5.

Semivolatiles. – Vaughen et al.[82] found that several nuclides, including ^{137}Cs, ^{125}Sb, and ^{106}Ru, did pass through the hot micrometallic filter in the burner off-gas stream. Downstream from this filter the gases cool to ambient temperature, a situation that will lead to deposition of most of the "volatile" ruthenium on metal piping walls. Cesium and other elements, such as antimony and tellurium, which are partly in the vapor state at burner temperatures, are similarly expected to deposit on piping walls. However, in the base Case 1 study a conservative DF of 1×10^8 has been chosen for ruthenium; other semivolatile elements, such as cesium and antimony, have been assigned DFs of 5×10^8.

Thorium and Uranium. – These elements will be released as particulates in the gaseous effluents. However, more conservative DFs for thorium and uranium of 5×10^7 were chosen, as opposed to 5×10^8 for other particulate matter, to reflect additional processing steps in which concentrated solutions of these two elements will be handled.

The above values for plant DFs and the calculated amounts entering the plant are used to calculate the source term for Case 1 (Tables 4.4 and 4.10).

Gaseous Effluent Treatment. – In Case 1 (Fig. 4.5), gases from the burners are passed through a holdup tank, possibly containing molecular sieve, to permit decay of ^{220}Rn. It is assumed that all of the fission and activation product tritium, ^{14}C, and noble gases are part of this stream; up to 20% of the total iodine may also be in these gases. Off-gases from both Thorex and Purex leaching operations will be passed directly to separate NO_x absorbers, possibly for reaction with NH_3 and conversion[90,91] to N_2 and H_2O. Off-gases from the Thorex NO_x absorber, including most of the iodine, will report to the holdup tank for ^{220}Rn decay. Various other off-gas streams of the Thorex process, including the off-gases from waste storage tanks, will also report to the holdup tank for ^{220}Rn decay. The combined off-gas streams will then pass through the $Hg(NO_3)_2$–HNO_3 scrubber, which removes 90% of the iodine and most of the tritiated water, the form in which tritium will be combined. However, no credit is taken for tritium removed at this point since it will then report to miscellaneous liquid waste (MLW) and ultimately be discharged as water vapor.

Following passage through the $Hg(NO_3)_2$-HNO_3 scrubber, the process off-gas will be heated and filtered before being passed through the silver zeolite bed, which will achieve an additional 99% removal of both organic and elemental iodine. Subsequently, the stream will pass through two banks of HEPA filters in series. These filters will be tested "in place" after installation and periodically thereafter. The two filter banks in series, each having a rated efficiency of 99.95% for the removal of particulates, would have a rated total DF of 4×10^6. However, since the greatly improved techniques for installing and testing these filters are only just being reduced to practice (Section 4.3.1), it is assumed that the filters in a commercial plant might be subject to some degree of impairment of efficiency and that the DF across the two filter banks would be reduced to 1×10^5. This degree of removal, coupled with the estimate that the plant DF for particulates is $>5 \times 10^8$, indicates that up to 0.02% of the fuel entering the plant could be dispersed into the off-gas system without decreasing the plant DF. The value of 0.02% of the fuel (approximately 300 g/day) is conservative, and the entrainment of this large amount of fuel is not expected.

Cell and laboratory ventilation air also will be passed through roughing and HEPA filters, mixed with the purified process off-gas stream, and discharged through the 100-m stack. An overall plant DF of $>5 \times 10^8$ and a DF of 2×10^3 (corresponding to 99.95% removal) for one HEPA filter in the plant ventilation equipment similarly indicate that up to 4×10^{-4}% of the fuel (approximately 6 g/day) could be contained in process solutions leaking into the cell spaces without decreasing the plant DF.

The overall plant DFs for both ^{129}I and ^{131}I in the gasborne effluent are conservatively estimated[93] to be 10^3 for the combination of mercuric nitrate–nitric acid scrubber and silver zeolite bed based on 90% of the iodine being vaporized from the dissolvers into the off-gas. It is estimated that dissolver solutions entering the solvent extraction systems will contain up to 10% of the iodine, from which significant amounts of organic iodides could be formed. Essentially all of the organic iodides entering the off-gas system will be removed by the mercuric nitrate–nitric acid scrubber and by the silver zeolite sorbant.[38] However, such iodides passing into the aqueous waste would be expected to limit the efficiency of iodine removal in this waste.

The maintenance of the plant DFs has been analyzed in terms of the consequences of selected, potential operational occurrences such as equipment failures. The plant would be shut down when any significant equipment failure occurred. The HEPA filters will be tested on a scheduled basis to ensure that adequate performance is maintained. Spare, parallel filters will also be provided. These parallel units will be brought into service when tests indicate that the efficiency of the "in service" filters has ceased to satisfy Technical Specifications. The $Hg(NO_3)_2$-HNO_3 scrubber system is a standard engineering unit which is expected to operate indefinitely without interruption. Spare pumps will be included in the installation to ensure the continuous movement of the scrub solution. The silver zeolite absorbers will be present as additional subsequent treatment systems, and since they do not have movable components, they represent very reliable operating units. Dissolving operations would be shut down if a problem should arise in the performance of these iodine retention units. Dissolvers for a commercial HTGR fuel reprocessing plant have not yet been designed so it is not possible to state very precisely how much fuel would remain in the dissolving process during such a shutdown.

However, it would probably be less than 0.1 days capacity, or less than 0.15 MTHM. This quantity of fuel contains 1/3000, or 0.034% of the iodine processed each year, and all of it could be released without exceeding the limit placed by the plant DF of 60 for ^{131}I, which is equivalent to a release of 1.7% of all 160-day-old ^{131}I received at the plant annually. Actually, 50 similar incidents annually, each leading to the release of 0.1 day's throughput of fuel, would correspond to the release of 1.7% of 160-day-old ^{131}I and to a DF of 60; the iodine in about 7.5 metric tons of fuel contains about 1.7% of the annual receipt of this element.

Leakage of dissolver solution, or other process solutions, onto the floor of the operating cells must also be considered in evaluating the capability of a plant to maintain a DF of 60 for ^{131}I and a DF of 10^6 for ^{220}Rn. Nearly all of the noble gases (including ^{220}Rn) and a fraction of the iodine, would be vaporized and released through the cell ventilation system during leakage of solution. The loss of a large volume of solution before the leak is detected by the sensitive instrumentation in the cells and ventilation air stream and operations are terminated is not credible.[a] For example, monitors for alpha-emitting nuclides[113,114] can set off alarms when the activity level rises to and remains[115] at 1200 dis/sec per cubic meter of air. This corresponds to 3.5×10^{-17}, 2.0×10^{-13}, and 4.0×10^{-11} g/m^3, respectively, for ^{220}Rn, ^{224}Ra, and ^{228}Th. Concentrations of these nuclides (based on ^{220}Rn dissolved instead of vaporized) will be about 1.5×10^{-10}, 8.4×10^{-7}, and 1.6×10^{-4} g/liter, respectively, in Acid-Thorex solutions containing 250 g Th/liter and about 11.4 g U/liter. If a Thorex dissolver tank were in a space of 5000-m^3 volume (20 m x 25 m x 10 m), an alarm system of the sensitivity stated above would activate within a few seconds (depending upon air flow within the space) due to ^{220}Rn when the leak rate became as high as 1.2 ml/sec. For comparison, the fuel reprocessing plant will process about 60 ml/sec of Thorex feed solution (on a 300 day/yr schedule). Longer instrument activation times would be required for smaller leaks, such as 1 hour for a leak[114] of 18 ml/hr (0.005 ml/sec). Actually, a leakage of 50 liters of dissolver solution (the most radioactive solution and containing up to 10% of the iodine) per day (0.6 ml/sec) could be tolerated without exceeding the release of 0.1% of the iodine. The leakage of this large volume of highly radioactive dissolver solution would activate a ^{220}Rn detector within a few seconds. Thus, it is apparent that leakage of feed solution will not be the source of release of a significant quantity of iodine.

Liquid Stream Treatment. – The aqueous wastes will contain up to 10% of the iodine, none of the krypton, up to 25-30% of the tritium, 0.5% of the uranium and plutonium, and essentially all of the other fission products and transplutonium elements initially present in the irradiated fuel, including ^{224}Ra and ^{228}Th, the precursors of ^{220}Rn. (Tritium, 70-75% of plant receipts, that enters the $Hg(NO_3)_2$-HNO_3 scrubber will be transferred to Miscellaneous Liquid Waste in this base Case 1.) These solutions will be concentrated by evaporation, sampled, and stored in large underground tanks; the duration of the storage probably will be shorter than planned for LWR fuel reprocessing wastes because of the buildup of ^{224}Ra and ^{228}Th and because of the increasing quantities of ^{220}Rn that will be carried in the CO_2 gas used to purge radiolytic hydrogen, Sect. 4.1. The source term of this report is based on these liquid wastes being stored only one year before solidification and encapsulation. The condensate from the evaporators will be mixed with the low-activity liquid waste (LALW) and reevaporated, and the bottoms will be recycled to the high-activity waste evaporator. The overhead from the LALW evaporator will be fed to a nitric acid fractionator. The bottom product from the fractionator

[a]Care in selecting instrument-detector location and protection, by HEPA filters and other means, will be very important to ensure that the detector does not become contaminated and, therefore, operated at continuously higher background radiation levels.

will be recycled to nitric acid storage for reuse in dissolution. The overhead product will be excess water, which will be purified before discharge to the environment. At this point, the overhead liquid potentially could contain most of the approximately 10% of the iodine that remained in the liquid phase from solvent extraction. The Iodine Removal Partial Evaporator, Figs. 4.5 and 4.15, receives most of the iodine that passes through the solvent extraction system (up to 10% of the iodine that enters the plant) plus a portion of that trapped in the $Hg(NO_3)_2$-HNO_3 scrubber; the latter iodine includes the 90% of the plant input that reports to the vapor phase during dissolving operations plus iodine recycled from the Concentrated Miscellaneous Waste Tank due to sparging. About 15% of the liquid and about 75% of the iodine entering the Iodine Removal Partial Evaporator will be vaporized, condensed, and routed to the Miscellaneous Liquid Waste Evaporator. The liquid stream from the Iodine Removal Partial Evaporator, containing less than 5% of the iodine, including less than 2.0% of the ^{131}I, that enters the plant, will then be vaporized, and the vapor will be discharged up the stack (Table 4.11). This vapor will be superheated to prevent condensation until it can become mixed with the large volume of ventilation air.

The miscellaneous liquid waste (MLW) will be neutralized and concentrated in the MLW evaporator; about 1% of the iodine will be vaporized with the overhead vapor. Neutralization increases the efficiency of retention of iodine during evaporation. The overhead condensate will flow to the Iodine Removal Partial Evaporator. The hot MLW evaporator concentrate will be discharged to the Miscellaneous Waste Storage tank where, upon cooling, solids crystallize from the solution. A fraction of the iodine is expected to be immobilized in the solids.

The plant DFs for iodine in the liquid waste treatment system, Fig. 4.15, in this study are estimated using the following assumptions:

1. Essentially all of the ^{131}I and ^{129}I that enters the plant accumulates in the miscellaneous waste storage tank. Approximately 90% comes from the $Hg(NO_3)_2$-HNO_3 scrubber and 10% from the solvent extraction raffinates.
2. The inventory of ^{131}I in the waste tank (MWST) becomes constant after about 80 days, and equal to 11.6 (from 8.05/ln 2) times the daily input, because of the decay of the short-lived ^{131}I (half-life, 8.05 days). However, the amount of ^{129}I (half-life, 1.6×10^7 years) in the tank increases continuously during the time that the waste is not encapsulated.
3. About 10% of the iodine that enters the plant each day plus about 1% of (including recycle iodine) that collected in the $Hg(NO_3)_2$-HNO_3 scrubber reaches the Iodine Removal Partial Evaporator in the overhead from the fractionator. The efficiency of the partial evaporator for removal of iodine is 75%. On these bases, and including an additional DF of ^{131}I for decay, a plant DF of 60 is estimated for ^{131}I in this study for the liquid waste treatment system (Table 4.11).
4. The estimation of the plant DF for ^{129}I must include an assumption concerning the quantity of waste that will accumulate in the plant before solidification. As described earlier in this section, sparging of the Concentrated Miscellaneous Waste Tank (with CO_2), transfer of the sparge gas to the off-gas treatment system, and return of the contained iodine to the MLW evaporator will reduce the DF for ^{129}I. Thus, a DF of 20 was estimated for this nuclide (Table 4.11).

In summary, the considerations listed in this section indicate that the overall plant DFs for

^{131}I and ^{129}I in Case 1 are limited by the DFs achieved in the liquid waste treatment system and that it is feasible to maintain plant DFs of 60 for ^{131}I, 20 for ^{129}I, and 5 x 10^8 for particulates in the model plant in Case 1. The radioactive materials released to the atmosphere in Case 1 are ^{129}I, 2.7 x 10^0 Ci/year; ^{131}I, 1.2 x 10^1 Ci/year; tritium, 8.9 x 10^5 Ci/year; ^{14}C, 7.4 x 10^3 Ci/year; ^{85}Kr, 2.7 x 10^7 Ci/year; ^{220}Rn, 8.0 x 10^4 Ci/year; ^{222}Rn, 5.8 x 10^1 Ci/year; thorium, 6.2 x 10^{-3} Ci/year; uranium, 9.8 x 10^{-3} Ci/year; plutonium, 1.4 x 10^{-2} Ci/year; semivolatiles, 8.4 x 10^{-1} Ci/year; and particulates, 7.8 Ci/year.

4.5.2 *Case 2a*

Case 2a provides, Table 4.11, an increase in the overall DF for iodine, both ^{129}I and ^{131}I, by the addition of either an ion exchange or macroreticular resin sorption column downstream from the Iodine Removal Partial Evaporator (Fig. 4.6). Such a bed, shown in the detailed iodine-path analysis of Fig. 4.15, will further reduce the iodine concentration in the water before it is vaporized and discharged to the atmosphere. Moore and Howerton[73,74] have demonstrated that macroreticular resins can provide DFs for iodine in aqueous solutions of 10^2. However, such values were obtained with laboratory-size equipment; no engineering-scale measurements have yet been made. As a result, the increase in iodine decontamination factor ascribed to this unit has been estimated to be 50. The net effect of this unit is, then, to increase the overall plant DFs for ^{129}I and ^{131}I to 5 x 10^2 and 3 x 10^3, respectively (Table 4.11).

Gaseous Effluent Treatment. – The off-gas treatment is the same as in Case 1, wherein the fractional release of ^{129}I is 1 x 10^{-3} of that entering the plant while the release of ^{131}I is about 5 x 10^{-8} of that entering the plant. Release of ^{131}I from the off-gas is very low because of radioactive decay in the silver zeolite bed.

Liquid Stream Treatment. – As stated above, the difference between Case 2a and Case 1 is the resin sorption bed in the former that provides an additional DF for iodine of 50. The fractional release of ^{129}I to the atmosphere via the liquid route is 1 x 10^{-3} (approximately 0.1/100); the corresponding number for ^{131}I is 5 x 10^{-4} (approximately 0.1/200). Even with this increased DF, the limiting path for iodine discharge is still the aqueous path.

In summary, this case represents an improvement in the plant DF for ^{129}I to 5 x 10^2 and for ^{131}I to 3 x 10^3, both with respect to Case 1, by installation of a single iodine sorption unit upstream from the Excess Water Vaporizer. Releases of ^{129}I and ^{131}I will be limited to 1.1 x 10^{-1} and 2.4 x 10^{-1} Ci/yr, respectively, as contrasted with values of 2.7 x 10^0 and 1.2 x 10^1 Ci/yr, respectively, in Case 1.

4.5.3 *Case 2b*

In Case 2b, the overall plant DF for iodine, Table 4.11, will be improved by an additional factor, with respect to Case 2a, for both ^{131}I and ^{129}I (Fig. 4.7). Iodine evolution equipment will be installed to vaporize iodine from the dissolver solution so that 99.5% of the iodine will enter the primary off-gas treatment system and about 0.5% will enter the liquid radwaste treatment system. Details of such an evolution step have not been fixed.

In order to avoid sending iodine collected in the gaseous effluent to aqueous waste, equipment is added to recycle the mercury in the $Hg(NO_3)_2$-HNO_3 scrubber systems and to convert the retained iodine to a nonvolatile solid, sodium iodate, which is stored as a radioactive waste or packaged for disposal (Sects. 4.3.5 and 4.3.6). Thus, 20-fold less iodine enters the liquid waste treatment system than in Case 1. This results in the release of less iodine from the aqueous treatment system to the vessel off-gas system and provides overall plant DFs in excess of 1×10^4 for both ^{129}I and ^{131}I, Table 4.11.

Gaseous Effluent Treatment. – The off-gas treatment system is the same as in Case 1 except for the addition of a second $Hg(NO_3)_2$-HNO_3 scrubber, to remove iodine from the dissolver off-gas, and iodine evolution tanks, Fig. 4.7. The vessel off-gas from the solvent extraction system contains 20 times less organic iodides than in Case 1; consequently, the DF for ^{129}I and ^{131}I will be at least 10^4.

The reliability of the mercuric nitrate–nitric acid scrubber and silver zeolite systems is discussed for Case 1 in Sect. 4.5.1, and similar considerations apply to Case 2b. The iodine evolution and iodine isolation systems, when fully developed, will represent standard engineering operations, and continuous long-term service is expected.

Liquid Stream Treatment. – The treatment of the liquid effluents is the same as in Case 2a (Sect. 4.5.2). In Case 2b, however, only about 0.5%, instead of 10% as in Cases 1 and 2a, of the iodine entering the plant each day will reach the Iodine Removal Partial Evaporator; and only 0.5%, instead of 100%, of the iodine will reach the Miscellaneous Waste Storage Tank. The remainder of the iodine will be isolated and stored or packaged as sodium iodate in the mercury recycle system. Consequently, the DFs for ^{129}I and ^{131}I across the liquid waste treatment system are increased to values in excess of 1×10^4.

In summary, the addition of three unit operations, an iodine scrubber [$Hg(NO_3)_2$-HNO_3] in the dissolver off-gas line, iodine evolution, and mercury recycle, to the process described in Case 2a will provide overall plant DFs for ^{129}I and ^{131}I of 1×10^4. The radioactive materials released to the atmosphere include ^{129}I, 5.4×10^{-3} Ci/year, and ^{131}I, 7.1×10^{-2} Ci/year, as compared with 2.7×10^0 and 1.2×10^1 Ci/year, respectively, for Case 1. All other nuclides will be the same as in Case 1.

4.5.4 *Case 2c*

Case 2c is similar to Case 2b except for the replacement of the $Hg(NO_3)_2$-HNO_3 scrubbers of the latter by the Iodox system in the former, Sect. 4.3.7. In this case, the overall plant DFs for both ^{129}I and ^{131}I will also be 1×10^4 (Fig. 4.8 and Table 4.11). The Iodox system contains equipment for removing iodine from the off-gases and for converting the iodine to a solid which is stored or packaged for disposal (Sect. 4.3.7). The iodine evolution system installed in Case 2b and silver zeolite traps are retained.

Gaseous Effluent Treatment. – The combined off-gas streams from the burners, dissolvers, iodine evolution, and various vessels will be passed through the Iodox system, where >99.9% of the iodine will be removed. Except for eliminating the $Hg(NO_3)_2$-HNO_3 scrubbers and the mercury recycle and iodine isolation systems, the remainder of the off-gas treatment system will

be the same as in Case 2b. The iodine retained in the Iodox system will be converted to a solid (HI_3O_8), which will be stored or packaged for disposal. Most of the mass of the iodine, approximately 1.4 kg/day, will be retained in the Iodox system. This will reduce the load on the silver zeolite system and increase the life of the zeolite bed. The overall DF for ^{129}I for the total gaseous effluent treatment system will be approximately 1×10^5 while that for ^{131}I will exceed 1×10^8 (Table 4.11).

The iodine evolution and Iodox systems will represent standard engineering operations when they are fully developed, and continuous long-term service is expected.

Liquid Stream Treatment. – The liquid waste treatment system will be the same as that described for Case 2b in Sect. 4.5.3. The DFs for ^{129}I and ^{131}I in this system are both 1×10^4.

In summary, the considerations listed in Sect. 4.5.1 indicate that the overall plant DFs for ^{131}I and ^{129}I in Case 2c will be limited by the DFs achieved in the liquid waste treatment system and by leakage of process solutions into ventilated spaces, such as the processing cells; it will be feasible to maintain overall plant DFs of 1×10^4 for both ^{131}I and ^{129}I. Case 2c will reduce the amount of iodine released to the atmosphere to 5.4×10^{-3} Ci/year for ^{129}I and 7.1×10^{-2} Ci/year for ^{131}I as compared with 2.7×10^0 and 1.2×10^1 Ci/year, respectively, for Case 1. All other nuclides are the same as in Case 1.

4.5.5 *Case 2d*

This case is similar to Case 2b, Table 4.11, except that the $Hg(NO_3)_2$-HNO_3 scrubbers and mercury recycle and iodine isolation systems are replaced by a bed of cadmium zeolite (CdZeO), Sect. 4.3.4, as shown in Fig. 4.9. The decontamination factors for iodine are the same as in Case 2b, although the zeolite may, depending on unit design (primarily retention time, or time to unit replacement) show a ratio of DFs for ^{131}I and ^{129}I that differs from that for the $Hg(NO_3)_2$-HNO_3 system.

Gaseous Effluent Treatment. – The off-gas treatment system is the same as in Case 2b with the exception that the primary iodine sorbent is cadmium zeolite rather than a solution of $Hg(NO_3)_2$-HNO_3. As noted above, the DF for iodine across the CdZeO bed is assumed to be the same as for $Hg(NO_3)_2$-HNO_3 scrubbers in Case 2b, namely 10^2 for both ^{129}I and ^{131}I.

Liquid Stream Treatment. – The treatment of the liquid effluents is the same as in Cases 2a, 2b, and 2c (Sects. 4.5.2, 4.5.3, and 4.5.4).

In summary, the above analysis and the considerations presented in Sect. 4.3.4 indicate that Cd zeolite (or other metal zeolite) may prove to be an effective treatment system for retaining iodine when this system is "reduced to practice." Using the listed assumptions, the releases of iodine in the vaporized liquid limit the ^{129}I and ^{131}I decontamination factors to 8×10^3 and 1×10^4, respectively; releases of these nuclides will be 6.7×10^{-3} and 7.1×10^{-2} Ci/year, respectively, as compared with Case 1 releases of 2.7×10^0 and 1.2×10^1 Ci/year.

4.5.6 *Case 3*

In Case 3, the release of semivolatile materials, thorium, uranium, plutonium, and other nonvolatile fission products (particulates) will be decreased by a factor of 10 by the addition of a sand filter to the off-gas system upstream of the 100-m stack (Fig. 4.10). All noncondensable and condensable off-gas will be passed through the sand filter before discharge through the 100-m stack.

Gaseous Effluent Treatment. – The process off-gas treatment system is the same as for Case 1 except that a sand filter is added in series with the two HEPA filters. The off-gas will pass upward through the sand filter (30-in.-high sand bed), which is nearly equivalent to an additional HEPA filter (Sect. 4.3.1). This provides for a third stage of filtration for process off-gases as well as a second stage of filtration for the cell and laboratory ventilation air.

Liquid Stream Treatment. – The system for treatment of liquid effluent is the same as for Case 1 except that, after final vaporization, superheating, and dilution with cell and laboratory ventilation off-gas, the excess water to be discharged to the atmosphere will pass through the sand filter. Filtration was not provided for the vapor stream in Case 1.

The radioactive materials released to the atmosphere in Case 3 are thorium, 6.2×10^{-4} Ci/year; uranium, 9.8×10^{-4} Ci/year; plutonium, 1.4×10^{-3} Ci/year; other particulates, 7.8×10^{-1} Ci/year; and semivolatiles, 8.4×10^{-2} Ci/year. These are 10 times lower than in Case 1. The release of all other nuclides is the same as for Case 1.

4.5.7 *Case 4*

Case 4 is concerned, Fig. 4.11, with the retention of tritium as tritiated water; this is achieved by baking tritium out of all burner residues and passing the off-gases through molecular sieve sorbent. The burning of 16.4 MTC/day (10.93 MTC/MTHM, 1.5 MTHM/day) would require 810 scfm of pure oxygen for complete conversion of CO_2. Conversion will not be complete, but any CO in the off-gases will be converted in secondary oxidizers to CO_2.

In the absence of the injection of additional gas, it is probable that a flow of even 1000 scfm of oxygen plus impurities, CO_2, and CO would not be able to fluidize the burning graphite particles. It is expected that to maintain fluidization it will be necessary to increase the gas flow rate to about 2000 scfm. This could be achieved by recycling about 1000 scfm of CO_2 from the KALC process when this is used.

Zeolites, for example the 3A, 4A, and 5A zeolites, are used[63,64] commercially to remove water from CO_2. The partial pressure of water (Sects. 4.3.8 and 4.3.9) in the burner off-gases reporting to the ^{220}Rn holdup system (after dilution with vessel off-gases) will be about 0.5 torr. However, this pressure will decrease rapidly as the gas traverses the sorbent bed. To favor the sorption of water, and to achieve a tritium decontamination factor of 10^2, it may be necessary to add more water to the off-gases. The average tritium content of this water will be about 92 g ^3H per (20 to 50) metric tons of water, or about 2 to 5 ppm by weight. In the absence of impurity lithium in the graphite and fuel, this corresponds to a minimum of 11 mCi/ml H_2O in 50 metric tons of water; with 0.05 ppm Li in graphite and 2 ppm Li in uranium and thorium (Table 4.5), the activity would have a maximum value of 45 mCi/ml H_2O in 20 metric tons of water.

Gaseous Effluent Treatment. – All gaseous effluent treatment equipment will be the same as in Case 1 except for the addition of molecular sieve to remove water from the burner off-gases.

Liquid Stream Treatment. – All liquid effluent treatment will be the same as in Case 1.

In summary, the release of ^{3}H as tritiated water will be reduced by a factor of 10^2 by using the "tritium bakeout" process to release tritium from ThO_2 and other burner residues, by injecting water vapor into the cooled burner off-gases if necessary, and then passing these gases through molecular sieve.

4.5.8 *Case 5*

In Case 5, Fig. 4.12, significant reductions in releases of all gasborne radioactivity, except ^{14}C, will be achieved by passing all off-gases through KALC process equipment (here used to include upstream traps to reduce the amount of water, iodine, and particulate matter that enters the KALC absorber) and subsequently discharging the carbon dioxide to the atmosphere through the plant stack. The KALC process,[66–68] or the German equivalent, AKUT,[62,116] involves the following steps: (1) cooling of the CO_2-rich off-gases through a partial condenser, which will remove some tritium as tritiated water and cause much of the semivolatile and particulate matter to deposit; (2) liquefaction of the CO_2, discharge of permanent gases nitrogen and oxygen, and collection of the noble gases (argon and krypton, in particular); and (3) vaporization of the nearly pure CO_2 and its discharge from the stack. The CO_2 processing rate will be in the order of 42 kg/min, or about 36 liters of liquid per minute (approximately 1.25 cfm). To handle this quantity of liquid CO_2, the KALC process fractionator-reboiler and stripper-reboiler[67] will have holdup volumes in the order of 600-800 liters (approximately 25 ft^3) and the corresponding holdup time for the time-sensitive ^{220}Rn will be in the order of 20 minutes. Such a holdup time will represent a DF for ^{220}Rn by decay of approximately 1.0×10^6. The KALC process is conservatively estimated to provide a DF of 100 for argon, krypton, ^{222}Rn, semivolatiles, and all particulates. However, no significant reduction in iodine releases from the plant occurs since evaporation of excess water in liquid wastes is the limiting factor for this element. Some of the tritium, as water, that enters the KALC system will remain dissolved in the CO_2 and subsequently be discharged in the off-gas to the atmosphere. In addition, approximately 25-30% of this nuclide will enter the Thorex dissolver and, finally, be discharged as water vapor. Therefore, release of tritium from the plant is reduced only by a factor of 3. In Case 5, it is assumed that CO_2, after being stripped of these other components, will be vaporized and discharged to the atmosphere. Thus, only the discharges of iodine and ^{14}C will be unaffected by the KALC process in this case.

Gaseous Effluent Treatment. – Process off-gas treatment is the same in Case 5 as in Case 1, except for the addition of KALC-process equipment, which provides a holdup time for all gases, including ^{220}Rn, of at least 20 min (Fig. 4.12).

Liquid Stream Treatment. – The system for treatment of liquid effluent is the same as for Case 1.

In summary, the KALC process is expected to lead to such large reductions in

radioactivity in the off-gas system that, except for iodine, tritium, and ^{14}C, leakage of solutions from equipment in the solvent extraction and waste handling facilities will become limiting factors in discharges from the fuel reprocessing plant. Release of the several types of radioactivity will be reduced with respect to the base Case 1 as follows: tritium, 3.0×10^5 Ci/yr as compared with 8.9×10^5 Ci/yr for the base case; ^{14}C, unchanged at 7.4×10^3 Ci/yr; ^{37}Ar, 1.1×10^2 Ci/yr as compared with 1.1×10^4 Ci/yr; ^{85}Kr, 2.7×10^5 Ci/yr as compared with 2.7×10^7 Ci/yr; ^{220}Rn, 8.0×10^{-2} Ci/yr as compared with 8.0×10^4 Ci/yr; ^{222}Rn, 5.8×10^{-1} Ci/yr as compared with 5.8×10^1 Ci/yr; semivolatile species (^{103}Ru, ^{106}Ru), 8.4×10^{-3} as compared with 8.4×10^{-1}; thorium, 6.2×10^{-5} Ci/yr as compared with 6.2×10^{-3} Ci/yr; uranium, 9.8×10^{-5} Ci/yr as compared with 9.8×10^{-3} Ci/yr; all other particulate activity, 7.8×10^{-2} Ci/yr as compared with 7.8 Ci/yr.

4.5.9 *Case 6*

This case, Fig. 4.13, is the same as Case 5 except that the purified CO_2 from the KALC process is not discharged to the atmosphere; instead, it is vaporized and contacted with a slurry of calcium hydroxide to sorb the CO_2, thereby causing the CO_2 to precipitate as $CaCO_3$, Sect. 4.3.12. This precipitate will be collected by filtration, dried, and either disposed at the plant or packaged for burial at a federal repository. It is assumed that the $CaCO_3$ precipitation process produces a DF for ^{14}C of at least 100.

Gaseous Effluent Treatment. – All gaseous effluent treatment equipment is the same as in Case 5 except for the addition of units for converting CO_2 to $CaCO_3$.

Liquid Stream Treatment. – All liquid effluent treatments are the same as in Case 1.

In summary, the release of ^{14}C can be reduced by an overall factor of 100 by conversion of the CO_2 from the burners to $CaCO_3$. All other releases will be the same as in Case 5.

4.5.10 *Case 7*

This case, Fig. 4.14, is a composite of features of Cases 1, 2c, 3, 4, and 6; it is one of several combinations that could be selected to illustrate reductions in releases of all categories of radionuclides, as exemplified by the preceding case studies. Molecular sieve is used to remove tritiated water, the Iodox process was chosen to be the primary iodine-removal system, noble gases, particulates, and semivolatile components are removed by the KALC, and the particulates and semivolatile matter further removed by a sand filter. Either the dual mercuric-nitrate/nitric acid scrubber system or the cadmium zeolite system could have been used as the primary iodine-removal process. Iodox was chosen since it is in the pilot-plant stage of development and is known to remove organic iodides, as well as iodine, extremely efficiently, thereby being in a more advanced stage of development than the cadmium zeolite system; Iodox has the advantage over the mercuric nitrate system of not using mercury, therefore not posing a problem in subsequent solidification of waste solutions. No attempt has been made to optimize the combination of the various waste treatment methods now under development. As in Case 2c, releases of iodine from the liquid wastes and/or from leaks into

the ventilation system exceed those from the off-gases. Iodine evolution, tritium bakeout, and a sand filter are used in this case.

Gaseous Effluent Treatment. – The off-gas treatment system contains the following units: (1) molecular sieve to remove tritiated water; (2) Iodox process equipment to remove all except traces of iodine followed by a silver zeolite polishing trap; (3) a sand bed, immediately upstream from the plant stack to reduce particulate discharges; (4) the KALC process, including its upstream cold trap, to serve as the primary sorber for krypton, other noble gases, and carbon dioxide, and as a secondary sorber for iodine, all particulate matter, and semivolatile matter; and (5) the CO_2-fixation process.

Liquid Effluent Treatment. – The liquid effluent treatment is the same as in Case 2c.

The plant corresponding to Case 7 is shown in Fig. 4.14. Releases for this case (and for Case 1 in parentheses) are as follows: tritium, 8.9×10^3 (8.9×10^5) Ci/yr; ^{14}C, 7.4×10^1 (7.4×10^3) Ci/yr; ^{37}Ar, 1.1×10^2 (1.1×10^4) Ci/yr; ^{85}Kr, 2.7×10^5 (2.7×10^7) Ci/yr; ^{129}I, 5.4×10^{-3} (2.7×10^0) Ci/yr; ^{131}I, 7.1×10^{-1} (1.2×10^1) Ci/yr; ^{220}Rn, 8×10^{-2} (8×10^4) Ci/yr; ^{222}Rn, 5.8×10^{-1} (5.8×10^1) Ci/yr; semivolatile materials, 8.4×10^{-4} (8.4×10^{-1}) Ci/yr; thorium, 6.2×10^{-6} (6.2×10^{-3}) Ci/yr; uranium, 9.8×10^{-6} (9.8×10^{-3}) Ci/yr; and other particulates, 7.8×10^{-3} (7.8) Ci/yr.

Releases of particulate matter or of gases into the ventilation system as a result of leakage of solutions from process vessels will be extremely low due to the high sensitivity of the alpha-particle detection systems (if these are properly protected and maintained as noted in Sect. 4.5.1) and the (relatively) high concentration of ^{220}Rn.

As in Case 6, CO_2, formed from burning the graphite, will be collected in KALC process equipment and then converted to $CaCO_3$.

4.6 References

1. R .C. Dahlberg, R. F. Turner, and W. V. Goeddel, *HTGR Fuel and Fuel Cycle Description*, General Atomic Company, GA-A12801(Rev.) (Jan. 21, 1974).

2. B. C. Finney, R. E. Blanco, R. C. Dahlman, G. S. Hill, F. G Kitts, R. E. Moore, and J. P. Witherspoon, *Correlation of Radioactive Waste Treatment Costs and the Environmental Impact of Waste Effluents in the Nuclear Fuel Cycle – Reprocessing Light-Water Reactor Fuel*, ORNL/NUREG/TM-6 (in press).

3. *Conceptual Design Summary and Design Qualifications for HTGR Target Recycle Plant*, General Atomic Co., GA-A-13365 (Draft now in review stage).

4. J. W. Snider and D. C. Watkin, *An Evaluation of HTGR Primary Burning*, ORNL-TM-4520 (November 1974).

5. Allied-General Nuclear Services, *Barnwell Nuclear Fuel Plant - Environmental Report*, Docket No. 50-332 (November 1971).

6. R. E. Blanco, L. M. Ferris, C. D. Watson, and R. H. Rainey, *Aqueous Processing of Thorium Fuels - Part 2*, ORNL-3418 (June 7, 1963).

7. R. H. Rainey and J. G. Moore, "Laboratory Development of the Acid Thorex Process for Recovery of Thorium Reactor Fuel," Nucl. Sci. Engrg. *10*, 367 (1961).

8. R. H. Rainey and J. G. Moore, *Laboratory Development of the Acid Thorex Process for Recovery of Consolidated Edison Thorium Reactor Fuel*, ORNL-3155 (April 27, 1962).

9. L. M. Ferris, "Head-End Processes for Graphite-Base and Carbide Reactor Fuels," pp. 121-70 in *Progress in Nuclear Energy*, Ser. III, Vol. 4, Pergamon, New York, 1969.

10. M. K. Valentine, "Development of a Gas Classification Method for Separating Ft. St. Vrain TRISO-TRISO Fuel Particles," Allied Chemical Corp., ICP-1051 (April 1974).

11. D. de Lesdernier, "Pneumatic Classification of Fort St. Vrain Fuel Particles," ERDA Report GA-A13135, General Atomic Company, June 20, 1975.

12. V. C. A. Vaughen, *On the Separation of Silicon-Carbide-Coated Fertile and Fissile Particles by Gas Classification*, Oak Ridge National Laboratory, ORNL-TM-5091 (in press).

13. J. E. Mack and D. R. Johnson, "Pneumatic Conveying of HTGR Recycle Fuel Particles," in *Thorium Utilization Program Progress Report for Period January 1, 1974, through June 30, 1975*, Oak Ridge National Laboratory, ORNL-5128 (in press).

14. E. R. Irish and W. H. Reas, "The Purex Process - A Solvent Extraction Method for Irradiated Uranium," pp. 83-106 in *Symposium on the Reprocessing of Irradiated Fuels Held at Brussels, Belgium, May 20-25, 1957*, USAEC, TID-7534.

15. F. J. Homan, J. H. Coobs, J. A. Conlin, R. L. Hamner, E. L. Long, Jr., B. H. Montgomery, and J. L. Scott, *Irradiation Performance of HTGR Fuel Rods in HFIR Experiment HRB-3 and ETR Experiment P13N*, Oak Ridge National Laboratory, ORNL-TM-4526 (October 1974).

16. M. J. Bell, *ORIGEN - The ORNL Isotope Generation and Depletion Code*, ORNL-4628 (May 1973).

17. T. B. Fowler and D. R. Vondy, *Nuclear Reactor Core Analysis Code: CITATION*, ORNL-TM-2496 (Supplement 3) (July 1972).

18. W. P. Eatherly, Oak Ridge National Laboratory, personal communication, January 1975.

19. C. W. Kee, *A Revised Light-Element Library for the ORIGEN Code*, ORNL-TM-4896 (May 1975).

20. W. Davis, Jr., *High Efficiency Particulate Air Filters - State of the Art Summary Pertaining to Plutonia Aerosols*, ORNL-TM-4463 (April 1974).

21. N. Hetland and J. L. Russell, Jr., "Adequacy of Ventilation Exhaust Filtering System for New Plutonium Facilities," p. 619 in *Proceedings of the 12th AEC Air Cleaning Conference Held in Oak Ridge, Tennessee, August 28-31, 1972*, CONF-720823 (January 1973).

22. F. J. Linck and J. A. Geer, "In-Place Testing of Multiple Stage HEPA Filters," p. 526 in *Proceedings of the 13th AEC Air Cleaning Conference Held in San Francisco, Calif., August 10-15, 1974*, CONF-740807.

23. A. J. Oliver and C. L. Amos, "Ventilation Design for New Plutonium Recovery Facility," p. 320 in *Proceedings of the 13th AEC Air Cleaning Conference Held in San Francisco, Calif., August 10-15, 1974*, CONF-740807.

24. H. J. Ettinger, J. C. Elder, and M. Gonzales, "Size Characteristics of Plutonium Aerosols," p. 740 in *Proceedings of the 12th AEC Air Cleaning Conference Held in Oak Ridge, Tennessee, August 28-31, 1971*, CONF-720823 (January 1973).

25. H. J. Ettinger, J. C. Elder, and M. Gonzales, *Performance of Multiple HEPA Filters Against Plutonium Aerosols, Progress Report for Period January 1 through June 30, 1973*, Report LA-5349-PR (July 1973).

26. M. Gonzales, J. C. Elder, and H. J. Ettinger, "Performance of Multiple HEPA Filters against Plutonium Aerosols," in *Proceedings of the 13th AEC Air Cleaning Conference Held in San Francisco, Calif., August 10-15, 1974*, CONF-740807.

27. USNRC Regulatory Guide 3.12, "General Design Guide for Ventilation Systems of Plutonium Processing and Fuel Fabrication Plants" (August 1973).

28. C. A. Burchsted, Oak Ridge National Laboratory, personal communication, January 1974.

29. D. W. Moeller, "Performance of Air Cleaning Systems in Nuclear Facilities," in *Semiannual Progress Report, March 1, 1974-August 31, 1974, Harvard Air Cleaning Laboratory*, COO-3049-5 (December 1974).

30. "Development of New and Improved Filter Medium Resistant to Fire, Water, and Fluorides," Final Report (No. 31) by the Herty Foundation for the USAEC on Contract No. AT(38-1)-411, Project 586 (October 31, 1973).

31. G. H. Sykes and J. A. Harper, "Design and Operation of a Large Sand Bed for Air Filtration," IAEA Symposium on Treatment of Airborne Radioactive Wastes, Vienna, August 26-30, 1968.

32. R. A. Juvinall, R. W. Kessie, and M. J. Steindler, *Sand-Bed Filtration of Aerosols: A Review of Published Information on Their Use in Industrial and Atomic Energy Facilities*, ANL-7683 (June 1970).

33. G. A. Schurr, D. B. Zippler, and D. C. Guyton, "Deep-Bed Filter Performances," in *Proceedings of the 12th AEC Air Cleaning Conference Held in Oak Ridge, Tennessee, August 28-31, 1972*, CONF-720823 (January 1973).

34. D. B. Zippler, "Evaluation of Multistage Filtration to Reduce Sand Filter Exhaust Activity," in *Proceedings of the 13th AEC Air Cleaning Conference Held in San Francisco, Calif., August 10-15, 1974*, CONF-740807.

35. H. W. Godbee, *Use of Evaporation for the Treatment of Liquids in the Nuclear Industry*, ORNL-4790 (September 1973).

36. D. T. Pence, F. A. Duce, and W. J. Maeck, "Developments in the Removal of Airborne Iodine Species with Metal-Substituted Zeolites," *Proceedings of the 12th AEC Air Cleaning Conference Held in Oak Ridge, Tennessee, August 28-31, 1972*, CONF-720823, Vol. 1 (January 1973).

37. R. D. Ackley and Z. Combs, *Applicability of Inorganic Sorbents for Trapping Radioiodine from LMFBR Fuel Reprocessing Off-Gas*, ORNL-TM-4227 (May 1973).

38. R. D. Ackley and R. J. Davis, *Effect of Extended Exposure to Simulated LMFBR Fuel Reprocessing Off-Gas on Radioiodine Trapping Performance of Sorbents*, ORNL-TM-4529 (August 1974).

39. W. Davis, Jr., *Models for Calculating the Effects of Isotopic Exchange, Radioactive Decay and Recycle in Removing Iodine from Gas and Liquid Streams*, ORNL-5060 (September 1975).

40. W. J. Maeck, D. T. Pence, and J. H. Keller, "A Highly Efficient Inorganic Adsorber for Airborne Iodine Species (Silver Zeolite) Development Studies," in *Proceedings of the 10th AEC Air Cleaning Conference Held in New York, August 28, 1968*, CONF-680821.

41. K. J. Schneider, *Effluent Technology Progress Letter No. 7, June and July 1972*, No. 12314 (August 10, 1972) (OFFICIAL USE ONLY - DRAFT).

42. Allied-General Nuclear Services, Barnwell Nuclear Fuel Plant - Final Safety Analysis Report, Vol. 1, Docket No. 50-332 (April 10, 1969).

43. *Final Detailed Statement by Fuels and Materials, Directorate of Licensing, U. S. Atomic Energy Commission, on the Environmental Considerations Related to the Proposed Operation of the Midwest Fuel Recovery Plant, Morris, Illinois, by the General Electric Company*, Docket No. 50-268 (December 1972).

44. *Final Environmental Statement by Fuels and Materials, Directorate of Licensing, U. S. Atomic Energy Commission, Related to the Barnwell Nuclear Fuel Plant, Allied-Gulf Nuclear Services*, Docket No. 50-332 (January 1974).

45. D. T. Pence, F. A. Duce, and W. J. Maeck, "A Study of the Adsorption Properties of Metal Zeolites for Airborne Iodine Species," in *Proceedings of the Eleventh USAEC Air Cleaning Conference Held in Richland, Washington, August 31-September 3, 1970*, CONF-700816.

46. W. J. Maeck and D. T. Pence, "Application of Metal Zeolites to Radioiodine Air Cleaning Problems," in *Proceedings of the Eleventh USAEC Air Cleaning Conference Held in Richland, Washington, August 31-September 3, 1970*, CONF-700816.

47. D. T. Pence and B. A. Staples, "Solid Adsorbents for Collection and Storage of Iodine-129 from Reprocessing Plants," in *Proceedings of the Thirteenth AEC Air Cleaning Conference Held in San Francisco, California, August 12-15, 1974*, CONF-740807.

48. B. A. Staples, Idaho Chemical Processing Plant, personal communication, January 1975.

49. *Draft National HTGR Fuel Recycle Development Program Plan*, prepared by the Staffs of Oak Ridge National Laboratory, Gulf General Atomic, and Allied Chemical Corp., ORNL-4702, Rev. 1 (August 1973).

50. O. O. Yarbro, F. E. Harrington, and D. S. Joy, *Effluent Control in Fuel Reprocessing Plants*, ORNL-TM-3899 (March 1974).

51. G. I. Cathers, J. M. Schmitt, and C. J. Shipman, "Iodine Control," in *Aqueous Fuel Reprocessing Quarterly Report for Period Ending December 31, 1972*, ORNL-TM-4141 (April 1973).

52. A. R. Irvine, ORNL, personal communication, January 1975.

53. D. J. Crouse, J. M. Schmitt, and W. B. Howerton, "Scrubbing of Iodine from Gas Streams with Mercuric Nitrate," in *Aqueous Fuel Reprocessing Quarterly Report for Period Ending December 31, 1972*, ORNL-TM-4141 (April 1973).

54. D. J. Crouse, J. M. Schmitt, and W. B. Howerton, "Scrubbing of Iodine from Gas Streams with Mercuric Nitrate Solutions," in *Aqueous Fuel Reprocessing Quarterly Report for Period Ending March 31, 1973*, ORNL-TM-4240 (June 1973).

55. Staff of the Chemical Technology Division, *Chem. Technol. Div. Ann. Progr. Rept. Period Ending May 31, 1970*, ORNL-4572, p. 69.

56. J. R. Bower and J. A. Buckham, "Control of Fission Product Activity During Short-Cooled Fuel Reprocessing Connected with the ICPP RALA Process," International Atomic Energy Agency Panel on Reprocessing of Highly Irradiated Fuels, Vienna, Austria, May 27-30, 1969.

57. G. I. Cathers, W. E. Shockley, and M. R. Billings, "Trapping of Iodine Compounds with Concentrated Nitric Acid," in *LMFBR Fuel Cycle Studies Progress Report for July 1971, No. 29*, ORNL-TM-3534.

58. G. I. Cathers, W. E. Shockley, and M. R. Billings, "Iodox Process," in *Aqueous Fuel Reprocessing Quarterly Report for Period Ending June 30, 1973*, ORNL-TM-4301.

59. W. S. Groenier, *An Engineering Evaluation of the Iodox Process: Removal of Iodine from Air Using a Nitric Acid Scrub in a Packed Column*, ORNL-TM-4125 (August 1973).

60. B. A. Hannaford and W. S. Groenier, reported on pages 44 and 45 by K. J. Notz, *Selected Studies in HTGR Reprocessing Development*, ORNL/TM-5328 (March 1976).

61. C. L. Fitzgerald, V. C. A. Vaughen, K. J. Notz, and R. S. Lowrie, *Head-End Reprocessing Studies with Irradiated HTGR-Type Fuels: III. Studies with RTE-7: TRISO UC_2-TRISO ThC_2*, ORNL-5090 (November 1975).

62. H. Beaujean, J. Bohnenstingl, M. Laser, E. Merz, and H. Schnez, "Gaseous Radioactive Emissions from Reprocessing Plants and their Possible Reduction," in *Symposium on Environmental Behavior of Radionuclides Released in the Nuclear Industry*, Aix-en-Provence, France, May 14-18, 1973.

63. D. W. Breck, *Zeolite Molecular Sieves*, John Wiley and Sons, New York, 1974.

64. C. R. Colley, "Adsorbent Selection for Gas Drying," *Brit. Chem. Eng. and Proc. Tech. 17*, 229 (1972).

65. *Military Specification, Propellant, Oxygen*, MIL-P-25508D (March 16, 1962).

66. R. W. Glass, P. A. Haas, R. S. Lowrie, and M. E. Whatley, *HTGR Head-End Processing: A Preliminary Evaluation of Processes for Decontaminating Burner Off-Gas*, ORNL-TM-3527 (July 1972).

67. M. E. Whatley, *Calculations on the Performance of the KALC Process*, ORNL-4859 (April 1973).

68. R. W. Glass, T. M. Gilliam, and V. L. Fowler, *An Empirical Model for Calculating Vapor-Liquid Equilibrium and Associated Phase Enthalpy for the CO_2-O_2-Kr-Xe System for Application to the KALC Process*, ORNL-TM-4947 (January 1976).

69. Staff of the Chemical Technology Division, *Aqueous Processing of LMFBR Fuels - Technical Assessment of Experimental Program Definition*, ORNL-4436 (June 1970), pp. 173-86.

70. J. L. McElroy, K. J. Schneider, J. N. Hartley, J. E. Mendel, G. L. Richardson, R. W. McKee, and A. G. Blasewitz, *Waste Solidification Program Summary Report, Vol. 11, Evaluation of WSEP High-Level Waste Solidification Processes*, BNWL-1667 (July 1972).

71. F. O. Cartan, H. R. Beard, F. A. Duce, and J. H. Keller, "Evidence for the Existence of Hypoiodous Acid as a Volatile Iodine Species Produced in Water-Air Mixture," pp. 342-49 in *Proceedings of the Tenth AEC Air Cleaning Conference Held in New York, August 28, 1968*, CONF-680821.

72. G. K. Cederberg and D. K. MacQueen, *Containment of Iodine-131 Released by the RALA Process*, IDO-14566 (Oct. 30, 1961).

73. J. G. Moore and W. B. Howerton, "Sorption of Iodine from Aqueous Solutions," p. 27 in *LMFBR Fuel Cycle Studies Progress Report for December 1970, No. 22*, ORNL-TM-3281.

74. J. G. Moore and W. Howerton, "Sorption of Iodine on Porous Plastics," p. 33 in *LMFBR Fuel Cycle Studies Progress Report for August 1970, No. 18*, ORNL-TM-3127.

75. J. G. Moore and W. B. Howerton, "Sorption of Iodine on Porous Plastics," p. 34 in *LMFBR Fuel Cycle Studies Progress Report for November 1970, No. 21*, ORNL-TM-3250.

76. A. G. Croff, *An Evaluation of Options Relative to the Fixation and Disposal of ^{14}C-Contaminated CO_2 as $CaCO_3$*, Oak Ridge National Laboratory, ORNL-TM-5171 (April 1976).

77. Staff of the Oak Ridge National Laboratory, *Siting of Fuel Reprocessing Plants and Waste Management Facilities*, ORNL-4451 (July 1970), see Table 8.2, p. 8-12.

78. Nuclear Fuel Services, *Environmental Report, NFS Reprocessing Plant, West Valley, New York, 1973*, USAEC Docket 50-201.

79. General Electric Company, *Applicant's Environmental Report*, NEDO-14504 (June 1971), USAEC Docket 50-268. See Table II-4-1 and IV-8-2 for expected release rates. Page IV-8-2 lists quantities of iodine expected in LWR fuels.

80. *Environmental Survey of the Uranium Fuel Cycle*, U.S. Atomic Energy Commission, Fuels and Materials, Directorate of Licensing, WASH-1248 (April 1974).

81. K. E. Cowser, C. D. Baumann, T. P. Hamrick, J. P. Nichols, G. W. Parker, R. R. Rickard, and T. H. Row, "Source and Releases of Radioactive Effluents in United States Nuclear Programs," presented at a meeting of the IAEA Panel on "Methods for Establishing Capacity of Various Sectors of the Environment to Safely Accept Radioactive Materials," IAEA, April 30-May 4, 1973, Vienna, Austria.

82. V. C. A. Vaughen, J. R. Flanary, J. H. Goode, and H. O. G. Witte, *Hot Cell Evaluation of the Burn-Leach Method for Reprocessing Irradiated Graphite-Base HTGR Fuels*, ORNL-4120 (Feburary 1970).

83. H. Beaujean, P. Filss, U. Grahmann, M. Laser, E. Merz, and U. Tillessen, *Reinigung der Verbrennungsabgase bei der Wiederaufarbeitung von HTGR-Brennelementen*, JUL-925-CT, KFA-Julich (February 1973).

84. C. L. Fitzgerald and V. C. A. Vaughen, ORNL, personal communication, Nov. 26, 1974.

85. Allied-General Nuclear Services, Barnwell, S. C., *Environmental Report, UF_6 Facility, Barnwell Nuclear Fuel Plant*, Docket 70-1327, See Table 3.4.2-7, Rev. (September 1974).

86. E. M. Shank, "Operation of the Thorex Pilot Plant with Highly Irradiated Thorium," pp. 279-300 in *Process Chemistry*, F. R. Bruce, J. M. Fletcher, and H. H. Hyman (eds.), Ser. III, Vol. 2, Progress in Nuclear Energy, Pergamon, New York, 1958.

87. T. J. Barendregt, "Fuel Dissolving and Off-Gas Treatment," pp. 74-96 in *Advanced Course on Reprocessing of Fuel from Present and Future Power Reactors*, organized by the Netherlands-Norwegian Reactor School at Institutt for Atomenergi, Norway, 21st August–1st September 1967, Report KR-126 (NSA 22:40165).

88. R. H. Rainey and R. C. Lovelace, "Fumeless Dissolving," p. 15 in *LMFBR Fuel Cycle Studies Progress Report for October, 1970, No. 20*, ORNL-TM-3217.

89. G. L. Miles, "The Fumeless Dissolving of Uranium," pp. 97-104 in *Process Chemistry*, F. R. Bruce, J. M. Fletcher, H. H. Hyman, and J. J. Katz (eds.), Ser. III, Progress in Nuclear Energy, McGraw-Hill, New York, 1956.

90. D. T. Pence and T. R. Thomas, "NO_x Abatement at Nuclear Processing Plants," Vol. 1, pp. 427-43 in *Proceedings of the Second AEC Environmental Protection Conference Held at Albuquerque, New Mexico, April 16-19, 1974*, WASH-1332[74].

91. E. B. Mays and M. R. Schwab, "Elimination of NO_x Fumes," *Chem. Eng. 85*, 112 (1975).

92. V. C. A. Vaughen, Oak Ridge National Laboratory, personal communication, January 1975.

93. O. O. Yarbro, "Supplementary Testimony Related to Fission Product Source Terms and Effluents from Barnwell Nuclear Fuel Reprocessing Plant," U. S. Atomic Energy Commission, Barnwell Nuclear Fuel Plant, Docket No. 50-332, October 1974.

94. O. O. Yarbro, "Supplementary Testimony Regarding the State of Technology for and Practicability of Control and Retention of Iodine in a Nuclear Fuel Reprocessing Plant," U.S. Atomic Energy Commission, Barnwell Nuclear Fuel Plant, Docket No. 50-332, October 1974.

95. A. E. J. Eggleton, *A Theoretical Examination of Iodine-Water Partition Coefficients*, Atomic Energy Research Establishment, Harwell, England, AERE-R-4887 (February 1967).

96. E. L. Compere, S. H. Freid, and C. W. Nestor, *Distribution and Release of Tritium in High-Temperature Gas-Cooled Reactors as a Function of Design, Operational, and Material Parameters*, Oak Ridge National Laboratory, ORNL-TM-4303 (June 1974).

97. F. F. Dyer, R. P. Wichner, W. J. Martin, L. L. Fairchild, and H. J. deNordwall, *Post-Irradiation Examination of Peach Bottom Unit 1 Element E06-01*, Oak Ridge National Laboratory, ORNL-5126 (in press).

98. "Lithium Content of Core Materials," p. 27 in *HTGR Fuels and Core Development Program, Quarterly Progress Report for the Period Ending May 31, 1975*, ERDA Report GA-A-13444, General Atomic Company, June 30, 1975.

99. J. A. Carter and R. L. Walker, "Low-Level Lithium Measurements by Isotope Dilution," in *Analytical Chemistry Division Annual Report for Period Ending November 30, 1975*, Oak Ridge National Laboratory, ORNL-5100 (February 1976).

100. C. L. Smith, *Fuel Particle Behavior under Normal and Abnormal Conditions*, General Atomic Co., GA-A12971 (Oct. 1, 1974).

101. *HTGR Base Program Quarterly Progress Report for the Period Ending February 28, 1974*, General Atomic Co., GA-A12916 (March 29, 1974).

102. M. J. Haire and D. W. McEachern, *Gaseous Radioactivity Levels in the Primary Coolant of an HTGR*, General Atomic Co., GA-A12946 (Oct. 1, 1974).

103. L. E. Treverrow, B. J. Kullen, R. L. Jarry, and M. J. Steindler, *Tritium and Noble-Gas Fission Products in the Nuclear Fuel Cycle. I. Reactors*, Argonne National Laboratory, ANL-8102 (October 1974).

104. *HTGR Base Program Quarterly Progress Report for the Period Ending August 31, 1972*, Gulf-GA-A12222 (September 1972).

105. W. C. Overstreet, P. K. Theobald, Jr., and J. W. Whitlow, "Thorium and Uranium Resources in Monazite Placers of the Western Piedmont, North and South Carolina," *Mining Engineering, 11*, 709 (1959).

106. W. C. Overstreet, A. M. White, and J. J. Warr, Jr., "Uranium-Rich Monazites in the United States," pp. D149-75 in *U. S. Geological Survey Professional Paper 700-D*, U S. Government Printing Office, 1970.

107. M. H. Staatz and J. C. Olson, "Thorium," pp. 468-76 in *United States Mineral Resources, Geological Survey Professional Paper 820*, U. S. Government Printing Office, 1973.

108. M. H. Staatz, "Thorium Veins in the United States," *Econ. Geology*, *69*, 494 (1974).

109. J. N. Rosholt, Jr., "Quantitative Radiochemical Method for Determination of Major Sources of Natural Radioactivity in Ores and Minerals," *Anal. Chem. 26*, 1307 (1954).

110. J. N. Rosholt, Jr., "Quantitative Radiochemical Methods for Determination of the Sources of Natural Radioactivity," *Anal. Chem. 29*, 1398 (1957).

111. J. N. Rosholt, Jr., U.S. Geological Survey, personal communication, June 26, 1975.

112. R. J. Guimond and S. T. Windham, "Radioactivity Distributions in Phosphate Products, By-Products, Effluents, and Wastes," presented at the Session on Disposal and Utilization of Wastes from Phosphate Fertilizer Production, 1975 American Chemical Society Annual Meeting, Chicago, Ill., August 24-29, 1975, USEPA Report ORP/CSD-75-3 (August 1975).

113. H. N. Wilson, C. C. Courtney, and G. A. Holt, "Constant Flow Rate Monitor for Alpha-Emitting Air-Borne Particulates," pp. 31-32 in *Instrumentation and Controls Division Annual Progress Report for the Period Ending July 1, 1961*, ORNL-3191 (Feb. 12, 1962).

114. R. L. Shipp, Jr., *Development of Two Systems for Monitoring Alpha-Emitting Particulates in Radioactive Gas Disposal Stacks*, ORNL-TM-3165 (Dec. 29, 1970).

115. R. L. Shipp, Jr., ORNL, personal communication, January 1975.

116. M. Laser, H. Barnert-Wiemer, H. Beaujean, E. Merz, and H. Vygen, "AKUT - A Process for the Separation of Aerosols, Krypton, and Tritium from Burner Off-Gas in HTGR Fuel Reprocessing," in *Proceedings of the Thirteenth AEC Air Cleaning Conference Held in San Francisco, California, August 12-15, 1974*, CONF-740807.

5.0 MISCELLANEOUS RADIOACTIVE AND NONRADIOACTIVE WASTES

The operation of an HTGR nuclear fuel reprocessing plant will generate various radioactive and nonradioactive wastes, such as reflector blocks, fuel element parts, discarded equipment, laboratory waste, sanitary waste, process cooling water, combustion products, etc. In addition, significant volumes of high- and low-activity liquid wastes are accumulated in storage tanks. Stainless steel cylinders filled with solid high-activity wastes will be produced at the plant since it will have facilities for solidification of the liquid waste. Estimates of the amounts of these wastes and a discussion of methods for their management at the model reprocessing plant that handles 450 metric tons of heavy metal (U + Th charged to the reactors) per year are presented in the following sections. The information is derived partly from environmental reports describing light-water reactor fuel reprocessing plants now under construction,[1-3] from survey reports from Oak Ridge National Laboratory,[4,5] and from new calculations pertaining to the HTGR fuel reprocessing plant.

5.1 Solid Radioactive Wastes

Miscellaneous. - The miscellaneous solid radioactive waste will consist primarily of graphite reflector blocks, discarded equipment, and laboratory wastes such as gloves, clothing, etc. The graphite will be broken into small pieces and fixed in concrete. Such waste will be buried in a retrievable manner onsite above the groundwater level. The burial areas will be prepared in a manner to minimize the percolation of water down over the waste containers. The packaging of the waste and preparation of the burial area will eliminate the leaching by water and migration of the radionuclides in the ground. At some later date if it is required, the waste could be placed in shipping casks and transferred to a permanent disposal site. An estimate of the amounts of radioactive solid waste to be handled at a reprocessing plant now under construction is presented in Table 5.1.

Graphite Waste. – The lifetime average annual flow of fuel-element graphite will be 4920 MTC/yr (10.93 MTC/MTHM). Estimated quantities of impurities in graphite are listed in Table 4.5, while quantities of activation products formed from these impurities in the fuel blocks are listed in Table 4.4. Using a graphite density of 2.25 g/cm^3 (140 lb/ft^3) and a fuel-block mass flow rate of 4920 MTC/year, the volumetric fuel-block flow rate is calculated to be 2190 m^3/yr (77,200 ft^3/yr). Activities in graphite due to any particular activation product, in Ci/ft^3, are obtained by dividing graphite activities given in Table 4.4 in units of Ci/yr by the factor 77,200 ft^3/yr. A few of the significant activities in waste graphite, including replaceable reflector blocks, are as follows: tritium, 15 Ci/ft^3; ^{14}C, 0.10 Ci/ft^3; ^{33}P, 0.16 Ci/ft^3; ^{35}S, 1.4 Ci/ft^3; and ^{55}Fe, about 6 Ci/ft^3.

The reflector block flow rate will be[6-7] about 16.2% of that of the fuel blocks, or about 12,500 ft^3/year to the fuel reprocessing plant. This will be the quantity of graphite to be cast into concrete for subsequent burial. When cast into concrete, the volume of graphite-bearing waste will be in the range 30,000 ft^3/yr.

Neutron fluxes in both axial[8] and radial directions[9] will be somewhat less than the average core flux. As an approximation, the flux in reflector blocks will be about 70-80% of the core-average flux and the quantities of activation products in the reflector blocks will be about 70-80% of those in fuel

blocks. However, as a conservative basis, it is assumed that specific radioactivities (Ci/MTC) are the same in reflector blocks as in fuel blocks.

Iodide Waste. – The isolation of iodine in the mercury [from $Hg(NO_3)_2$-HNO_3 sorber] recycle or Iodox systems (Sects. 4.3.6 and 4.3.7) will produce about 3.9 pounds of $NaIO_3$ per day or 3.4 pounds of HI_3O_8 per day, which will be packaged in stainless steel cylinders and retained in storage prior to transfer to a waste repository. If cadmium zeolite is used as the primary iodine sorbent, as in Case 2d (Section 4.5.5), its volume will be about 3 ft^3/day on the basis of a capacity of 25 mg I/cc of zeolite, 50% utilization of capacity, and the lifetime average iodine flowrate through the reprocessing plant.

Tritium Waste. – In Case 4, Section 4.5.7, tritiated water is sorbed onto molecular sieve. The burner off-gases will contain about 40 ppm water by weight, which corresponds to a water partial pressure of about 0.07 torr and to a flow rate of 1650 kg/yr. An additional 10,000 to 15,000 kg H_2O will enter the off-gas system in purge gases. The total water partial pressure will thus be in the range 0.5 to 0.75 torr. In order to sorb water on molecular sieve to a DF of 100, it may be necessary to dilute the existing water still further, thereby increasing the partial pressure of water to 1 to 2 torr and the flow to 25,000 to 75,000 kg H_2O/yr. Using a capacity of 0.1 g H_2O/g sieve and 50% usage of the sieve, the volume of tritiated sieve waste will be about 18,000 to 50,000 ft^3/yr.

Solid High-Activity Wastes. – Estimates indicate that about 6 ft^3 of solid high-activity waste will be produced from the solidification of the liquid waste residues from reprocessing 1 metric ton of fuel.[5,10] This amounts to an annual accumulation of 2700 ft^3/year in 430 12-in.-diam by 10-ft-high (filled to the 8-ft level) stainless steel cylinders (very nearly 1 cylinder per MTHM processed). Federal regulations state that solidified wastes can be stored up to 10 years at the reprocessing site prior to shipment to a waste repository.[11] Each cylinder would contain about 10^6 Ci of alpha and beta activity and 2.5 kW of heat after 10 years of decay. However, generation of ^{220}Rn in the aqueous wastes might lead to their conversion to solids and encapsulation approximately a year from reactor discharge, at which time the alpha and beta activity in each cylinder would be about (4-5) x 10^6 Ci and the heat load would be about 13-14 kW/cylinder. Including the SiC coating and fission products, there will be nearly 6 MT of 25W particles retired to waste storage each year at the reference HTGR fuel reprocessing plant.

5.2 Liquid Wastes

Estimated annual rates of production of liquid waste are as follows: (1) 1.78 x 10^6 gallons of high-activity waste from the 409.24 MT of thorium plus 14.85 MT of 23R uranium (as loaded into the reactor) that report to the Thorex process; (2) 6000 gallons of high-activity wastes from the 20.47 MT of 25R uranium that reports to the Purex process; (3) 90,000 gallons of intermediate-level waste, assuming 200 gal/MT as used in ref. 4 for LWR and LMFBR fuel reprocessing plants; and (4) 4.5 x 10^6 gallons of low-level waste, assuming 10,000 gal/MT as used in ref. 4 for LWR and LMFBR fuel reprocessing plants. The value of 1.78 x 10^6 gal of high-activity waste from the Thorex process is derived from the flowsheets of Kuchler, Schafer, and Wojtech[12] for the first cycle of Acid-Thorex solvent extraction and of Rainey and Moore[13] for the second cycle (acid-deficient) Thorex solvent extraction. These two cycles use 250 and 265 g Th/liter and generate 2.22 and 2.3 liters of waste solution per liter of

feed, respectively. By combining these values with the value 379.3 MT thorium discharged from HTGRs per 450 MTHM charged to the reactors, high-level wastes from Thorex first and second cycles are calculated to be 898,000 gal and 878,000 gal respectively. The power densities of these solutions will be in the range of 3 watts/liter and 0.16 watts/liter, respectively.

5.3 Chemical and Sanitary Wastes

Approximately 2300 gpm of primary and secondary cooling water would be required for a 1.5-metric ton/day HTGR fuel reprocessing plant. This liquid will be discharged to the environment. In-line radiation monitors will sound alarms if radioactivity is detected in the primary cooling loop. A settling pond and cooling tower will be included in the model plant cooling water system, and both the secondary cooling system and the cooling tower basin will be monitored. The entry of radioactive materials into the primary cooling and secondary cooling loops would require the failure of both of the heat exchangers at the same time and will be an extremely remote possibility. The amounts of chemicals used for boiler treatment and cooling tower treatment are estimated as follows:

Chemical Added	Amount (lb/day)
Polyacrylate	6
Sodium sulfite	1
Sodium sulfate	5
Trisodium phosphate	4
Calcium and magnesium phosphates	2

The sanitary waste treatment system at the HTGR fuel reprocessing plant is assumed to be identical to that at the Barnwell LWR fuel reprocessing plant, which will handle[2] about 15,000 gpd. The effluent from the sanitary waste treatment facility will be chlorinated and discharged to a pond that will provide several days retention, after which it will be discharged to the environment (Table 5.2). The estimated composition of the discharged sewage is presented in ref. 2.

5.4 Nonradioactive Gaseous Effluents

In addition to the gaseous effluent released from the 100-m stack, nonradioactive gaseous effluents will be released from other stacks within the plant complex, such as utility boiler stacks and vessel vents from the cold chemical make-up area. The only nonradioactive chemical gaseous effluent of any consequence will be comprised of the oxides of nitrogen and is postulated to be 100% NO_2. Quantities of nonradioactive gaseous effluents, assumed to be the same as those at the Barnwell plant, are given in Table 5.3.

5.5 References

1. *Barnwell Nuclear Fuel Plant Environmental Report*, Docket 50-332-22, Allied-Gulf Nuclear Services, Barnwell, S. C. (November 1971).

2. *Draft Environmental Statement by Fuels and Materials Directorate of Licensing, U.S. Atomic Energy Commission, Related to the Barnwell Nuclear Fuel Plant, Allied-Gulf Nuclear Services*, Docket No. 50-332 (January 1973).

3. *Safety Evaluation by the Directorate of Licensing - Fuels and Materials - U.S. Atomic Energy Commission in the Matter of Midwest Fuel Recovery Plant - General Electric Company*, Docket No. 50-268 (November 1972).

4. Staff of the Oak Ridge National Laboratory, *Siting of Fuel Reprocessing Plants and Waste Management Facilities*, ORNL-4451 (July 1970).

5. J. O. Blomeke and J. P. Nichols, *Commercial High-Level Waste Projections*, ORNL-TM-4224 (May 1973).

6. *HTGR Refueling Equipment and Procedures*, GAT-2004 (June 1974).

7. L. A. Goldman, General Atomics Company, letter to W. Davis, Jr., dated January 22, 1975.

8. "Public Service Company of Colorado 330-MW(e) High-Temperature Gas-Cooled Reactor Research and Development Program," *Quarterly Progress Report for the Period Ending September 30, 1974*, General Atomic Company, GA-A13167 (Oct. 31, 1974).

9. W. E. Thomas, Oak Ridge National Laboratory, personal communication, February 1975.

10. J. O. Blomeke, C. W. Kee, and J. P. Nichols, *Projections of Radioactive Wastes to be Generated by the U.S. Nuclear Power Industry*, ORNL-TM-3965 (June 1974).

11. Code of Federal Regulations, Title 10, Part 50, Appendix F.

12. L. Kuchler, L. Schafer, and B. Wojtech, "The Thorex Two-Stage Process for Reprocessing Thorium Reactor Fuel with High Burnup," *Kerntechnik 13*, No. 718 (1971).

13. R. H. Rainey and J. G. Moore, *Laboratory Development of the Acid Thorex Process for Recovery of Consolidated Edison Thorium Reactor Fuel*, ORNL-3155 (April 27, 1962).

6.0 COSTS FOR RADWASTE TREATMENT

Costs for the radwaste treatment cases for the 450-metric ton/year model fuel reprocessing plant are estimated as additions to the base case model plant. The capital costs, annual fixed charges, annual operating cost, total annual cost, reprocessing cost, and contribution to the cost of power for the radwaste treatment cases are summarized in Table 6.1. The incremental costs and the corresponding calculated amounts of radioactive materials released (source terms) are presented in Table 6.2. Annual fixed charges are estimated at 26% of total capital investment; this is typical of cost estimates for investor-owned reprocessing plants.[1] The basis for calculation of the fixed charge rate and the operating cost is presented in Sect. 6.2. An annual operating expense is added to the annual fixed charge on capital to give the total annual cost of a radwaste treatment case. This cost is then divided by the annual amount of fuel reprocessed, or by the annual amount of electricity that was produced by the reprocessed fuel, to obtain the cost of radwaste treatment per unit weight of fuel reprocessed or the total contribution to the cost of power for each radwaste case. A fuel reprocessing plant with a nominal production rate of 450 metric tons per year heavy metal (U+Th) can service approximately fifty 1000-MW(electrical) HTGRs (based on an average burnup of 95,000 MWd/metric ton, ranging from 40,000 MWd/metric ton of thorium to nearly 700,000 MWd/metric ton of uranium, 80% load factor, and 38.5% thermal efficiency). Costs are estimated in terms of 1973 dollars to make this report consistent with other reports in this series.[2-5] No attempt is made to include inflation; however, based on the Marshall and Stevens (M and S) Equipment Cost Index[6] for chemical equipment, the 1975 costs will be about 30% higher than the 1973 costs. The cost estimates are expected to have an accuracy of about ±30%. The details of the cost estimates are provided in Appendix A.

6.1 Capital Cost

The capital cost of a radwaste treatment case is the sum of the direct cost and the indirect cost. The interest during construction and the contingency allowance are included as indirect costs to simplify the calculations.

6.1.1 *Direct Costs*

The size and purchase price of the major equipment components are based on general methods used to estimate costs of conventional chemical plant equipment for conceptual designs.[2-10] Appropriate costs based on experience in the nuclear industry are then added to the initial costs to allow for: (1) installation of the components, including piping, instrumentation, and controls; (2) modifications to provide for remote maintenance; and (3) fabrication upgrading (where necessary) to provide the required quality assurance.

Structure requirements are estimated on the bases of equipment size and the requirements for auxiliary equipment (pumps, condensers, etc.). The costs for the cells are estimated as Class 1 structures. The costs of a warehouse and other related facilities are not included. The total direct cost for each radwaste treatment case is the complete, installed equipment cost (material and labor), including the structure.

6.1.2 *Indirect Costs*

Indirect costs are estimated as follows:

	Percentage of Direct Cost
Engineering and supervision	15
Construction expense and contractor's fee	20
Engineering design (A-E)	19
Quality assurance[a]	6
Other owner's cost	10
Contingency	40
Interest during construction[b]	39
Total	149

6.2 Annual Fixed Charges and Operating Costs

The annual fixed charges on invested capital are based on the Fuel Recycle Task Force[11] annual fixed charge rate of 24%, which is, in turn, based on the following assumptions:

Plant lifetime, years	15
Capital investment in bonds, %	30
Interest rate on bonds, %	5
Rate of return on equity (after taxes), %	16
Federal income tax rate, %	50
State income tax rate, %	3
Local property tax rate, %	3.2
Annual cost of replacements, %	0.35
Annual property insurance rate, %	0.25

By present-day standards, the 5% bond interest rate is probably low. Increasing it to 8% would increase the fixed charge rate to about 26%, and for this study a fixed charge rate on invested capital of 26% is used.

No attempt was made to perform a detailed analysis of each radwaste treatment case to estimate the annual operating and maintenance cost; however, since radwaste treatment is a part of a complete reprocessing plant, an annual operating cost of 40% of the annual fixed charge is used. This is in agreement with a previous fuel reprocessing cost estimate.[1] However, for the sand filter used in Cases 3 and 7, the annual operating and maintenance expense is estimated at 10% of the annual fixed charge, while in Cases 2d and 7 the annual expense of replacing ($148,000) and drumming ($1000) the spent CdZeO, and in Cases 6 and 7 the annual expense for lime ($584,000), and drumming the wet $CaCO_3$ filter cake ($5,380,000), are included as additional annual operating expenses. The total annual cost of each radwaste treatment case is the sum of the annual fixed charge and the annual operating cost.

---

[a]The cost of conventional chemical plant equipment does not reflect quality assurance costs anticipated for a nuclear fuel reprocessing plant being built in the near future. An additional cost of 6% of the direct cost has been assumed to reflect costs for more stringent quality assurance.

[b]Interest is applied to the cumulative total cost at a rate of 8% per year over a 5-year cash flow expenditure period.

6.3 Installed Equipment Costs

The estimated direct and capital costs for equipment in Cases 2a through 7 are presented in Table 6.3. The direct cost is the estimated installation (material and labor) cost of the equipment; the capital cost includes direct costs and indirect costs.

6.4 References

1. Staff of the Oak Ridge National Laboratory, *Siting of Fuel Reprocessing Plants and Waste Management Facilities*, ORNL-4451 (July 1970).

2. B. C. Finney, R. E. Blanco, R. C. Dahlman, G. S. Hill, F. G. Kitts, R. E. Moore and J. P. Witherspoon, *Correlation of Radioactive Waste Treatment Costs and the Environmental Impact of Waste Effluents in the Nuclear Fuel Cycle - Reprocessing Light-Water Reactor Fuel*, ORNL/NUREG/TM-6 (in press).

3. W. H. Pechin, R. E. Blanco, R. C. Dahlman, B. C. Finney, R. B. Lindauer, and J. P. Witherspoon, *Correlation of Radioactive Waste Treatment Costs and the Environmental Impact of Waste Effluents in the Nuclear Fuel Cycle for Use in Establishing "As Low As Practicable" Guides - Fabrication of Light-Water Reactor Fuel From Enriched Uranium Dioxide*, ORNL-TM-4902 (May 1975).

4. A. D. Ryon and R. E. Blanco, *Correlation of Radioactive Waste Treatment Costs and the Environmental Impact of Waste Effluents in the Nuclear Fuel Cycle for Use in Establishing "As Low As Practicable" Guides – Appendix A. Preparation of Cost Estimates for Volume 1, Milling of Uranium Ores*, ORNL-TM-4903, Vol. 2 (May 1975).

5. W. S. Groenier, R. E. Blanco, R. C. Dahlman, B. C. Finney, A. H. Kibbey, and J. P. Witherspoon, *Correlation of Radioactive Waste Treatment Costs and the Environmental Impact of Waste Effluents in the Nuclear Fuel Cycle for Use in Establishing "As Low As Practicable" Guides – Fabrication of Light-Water Reactor Fuels Containing Plutonium*, ORNL-TM-4904 (May 1975).

6. *Chemical Engineering*, McGraw-Hill, Dec. 9, 1974.

7. *AEC Conceptual High-Temperature Gas-Cooled Reactor (HTGR) Fuel Processing Plant*, WASH-1152 (October 1970).

8. M. S. Peters and K. D. Timmerhaus, *Plant Design and Economics for Chemical Engineers*, 2nd edition, McGraw-Hill, New York, 1968.

9. K. M. Guthrie, "Capital Cost Estimating," Chem. Eng., pp. 114-42 (March 24, 1969).

10. K. M. Guthrie, *Process Plant Estimating, Evaluation and Control*, Craftsman Book Company of America, Solano Beach, Calif., 1974.

11. *Reactor Fuel Cycle Costs for Nuclear Power Evaluation*, WASH-1099 (December 1971).

7.0 ENVIRONMENTAL IMPACT

The radiological impact of the model HTGR fuel reprocessing plant is assessed by calculating radiation doses to individuals and populations, for each site and radwaste treatment case. Potential pathways for radiation exposure to man from radionuclides originating in a nuclear facility are presented schematically in Fig. 7.1. Those shown in the figure are not exhaustive, but they illustrate the principal pathways of exposure based on experience.

Estimates of average dose per year of plant operation to both individuals and to the population within 55 miles, which may result from the expected radionuclide discharges during normal operation, are presented below. A dose commitment calculated for one year of radionuclide intake (internal-exposure pathways) is an estimate of the dose an individual will accrue within the next 50 years as a result of that one year of intake (i.e., 50-yr dose commitment). All of the doses estimated in this report represent dose commitments.

Organ doses may vary considerably for internal exposure from ingested or inhaled materials because some radionuclides concentrate in certain organs. For this reason, estimates of radiation dose to the total body and major organs are considered for all pathways of internal exposure based on parameters applicable to an average adult.

Radiation doses to the internal organs of children in the population differ from those received by an average adult because of differences in metabolism, organ size, and diet. Differences between the organ doses of a child and those of an average adult in excess of a factor of 3 would be unusual for all pathways of internal exposure except for the atmosphere-pasture-cow-milk pathway. For this pathway, the estimated dose to the thyroid of a one-year-old child from radioactive iodine in milk is several times that for an average adult.[1,2]

The population dose estimates are the sums of the total-body doses to individuals within 55 miles of the plant. Similarly, the population dose estimates for the organs are the sums of specific organ doses of the individuals within the 55-mile radius of the plant. Since radiation doses to the total body are relatively independent of age,[3] the person-rem estimates are based on total-body doses calculated for adults. The person-organ-rem estimates are, likewise, based on the organ doses for the adult.

Estimates of doses to the total population from airborne effluents are limited to distances of 55 miles from the model plant. Even at a 20-mile distance, the doses have decreased to about 5% of their values at 0.5 to 1 mile from the plant, and the population density and meteorological factors merge with the average for the United States rather than remaining as distinct functions of the model HTGR fuel reprocessing plant. For example, a recent study[4] suggests that a plant which processes 5 metric tons of fuel per day and releases all of the krypton and tritium could lead to an annual total-body dose to the population of the United States of 910 person-rem from ^{85}Kr and 2700 person-rem from tritium. The sum of these amounts to about 0.013% of the 2.7×10^7 person-rem dose received by the 2.1×10^8 residents from the natural, annual, background dose of about 130 mrem. The annual dose to the world population ascribable to the HTGR fuel reprocessing plant is estimated to be 15,000 person-rem from ^{85}Kr and 3600 from tritium.[4] Similarly, these doses are very small fractions of that due to natural background. The estimated doses to the population from other radionuclides are lower fractions of the background radiation.

7.1 Meteorology

Release of airborne effluents to the atmosphere is the major pathway for environmental contamination from fuel reprocessing facilities. There are no planned releases of radioactive liquids from the model plant. The HTGR fuel reprocessing plant does not require large quantities of water for cooling or dilution, as compared to power plants, and thus does not need to be located at a site close to large aquatic environments. (The heat of combustion of the graphite is equivalent to 6 MWt as compared with the approximately 130,000 MWt produced in the 50 reactors whose spent fuel is shipped to the model fuel reprocessing plant.) Atmospheric transport is the principal mode of delivery of radioactive materials to terrestrial environments associated with the HTGR fuel reprocessing facility.

Atmospheric transport of radioactive substances is calculated according to the Gaussian plume model.[5] A computer code, AIRDOS,[6] was used to calculate approximate annual average concentrations of radionuclides in air, their rates of deposition on ground surfaces, and doses to man through all significant pathways at various distances from the source of release. The meteorologic data required for the calculations are joint frequency distributions of wind velocity and direction summarized by stability class. Meteorologic data from representative midwestern and southeastern coastal regions[7] are used to calculate average values of χ/Q ($sec \cdot m^{-3}$), i.e., factors that are used to calculate the concentrations of radioactive materials at a reference point per unit of source strength. These values are calculated for sectors in the 16 principal compass directions bounded by radial distances out to 55 miles from the point of release. The χ/Q values are based on a release from a 100-m stack and a plume rise resulting from the momentum of stack gases estimated by assuming a 3.0×10^5 cfm flow rate through a stack 11.28 ft in diameter. Magnitudes of χ/Q values are somewhat similar at the two sites, but directions at which maximum values are attained are different. Buoyancy of the plume due to its temperature being higher than atmospheric ambient temperature was not included in calculating dose distributions. However, this buoyancy is discussed briefly in Sect. 7.5.

The maximum concentration of radioactive substances in air occurs at approximately 0.56 mile from the point of release at the midwestern site and at approximately 0.7 mile at the coastal site. Maximum χ/Q values are predicted over the range of 0.5 to 2 miles, beyond which the χ/Q values decrease more than tenfold out to a distance of 55 miles. The appropriate χ/Q value for each of the 16 quadrants and for the distance from the stack is multiplied by the release rate at the stack to obtain the concentration at the desired point. Maximum χ/Q values for radioiodine and particulates are 4.063×10^{-6} $sec \cdot m^{-3}$ and 4.413×10^{-8} $sec \cdot m^{-3}$ for the midwestern and coastal sites, respectively. Details of the use of χ/Q values in the computer code to calculate doses are given in ref. 8. Concentrations in air for each sector are used to calculate dose via inhalation and submersion in air. Air concentrations in various sectors are also used in conjunction with deposition velocities to estimate a steady-state ground concentration for annual exposures.

Accumulation of radioactive materials on the ground surface is represented with an infinite plane source model for external radiation exposure. The ground deposits are also assimilated into food which, when ingested, results in additional dose via the food-chain pathway. Radioactive materials from the atmosphere are deposited on the ground surfaces through the mechanisms of dry deposition and washout. Dry deposition, as used in this analysis, represents an integrated deposition of radioactive materials by processes of adsorption, particle interception, diffusion and chemical-electrostatic effects, and is calculated from the

deposition velocity, Vd.[9] Deposition velocities for particles and reactive gases, such as iodine, commonly range from 0.1 to 1.0 cm/sec for micron-sized particles.[6] A value of 1.0 cm/sec is used for calculation of the rate of deposition of radioactive particles, iodine, and semivolatile substances.

Many variables influence the washout of radioactivity from the atmosphere by rain, snow, etc.[10] The process through which rain or snow washes out radioactive particles or soluble gases and deposits them on ground or water surfaces is referred to as scavenging. The fraction of particles or soluble gases removed by scavenging from a vertical column of air per unit time during rain or snow is the scavenging coefficient. A discussion of methods used to estimate scavenging coefficients during rainfall (or snowfall) at the plant site can be found in *Meteorology and Atomic Energy - 1968*.[5] The scavenging coefficients are used as data in the atmospheric dispersion model of the AIRDOS[6] computer code. A value of 2.0×10^{-5} sec^{-1} is used for particulates, tritium, ^{14}C, and radioiodines.

7.2 Population

Population distributions representative of southeastern coastal and midwestern environments are the average of such distributions around two fuel fabrication plants and one reprocessing plant for each area, i.e., the midwestern and southeastern coastal sites. Distributions for sites near St. Louis, Mo., and Wilmington, N. C., are included in the averaging because the meteorologic data used for atmospheric transport of radioactive substances are based on these areas. The Wilmington site also represents the half-annulus distribution which is representative of areas adjacent to the ocean.

Average population distributions are calculated from data sets for areas determined by the latitude-longitude coordinates specified in Table 7.1. Actual population distributions from these locations were summarized from 1970 Census Bureau tape records to obtain representative distributions for both the midwestern and southeastern coastal regions (Tables 7.2 and 7.3). The computer code, PANS,[11] provides sector summaries for annuli bounded by distances of 0, 1, 2, 3, 4, 5, 10, 15, 25, 35, 45, and 55 miles. The sector summaries correspond to the same sectors in the 16 compass directions for which χ/Q are calculated. The computer code summaries of population data from census tapes are accurate beyond a five-mile radius. Within five miles, where sectors represent relatively small areas, distributions are somewhat disconnected because census enumeration districts encompass several sectors while the population record is reported in a single sector. Averaging data from three locations smooths the major discontinuities and results in cumulative totals which are somewhat similar to those reported for actual fuel reprocessing facilities.[12,13]

Population distributions for the two sites of the model fuel reprocessing facilities have somewhat different characteristics (Tables 7.2 and 7.3).[12,13] Average density within the 55-mile radial distance was 50 to 60 individuals per square mile for the coastal plain site except for a factor of 5 increase to 289 individuals per square mile, representing a small city, in the 5- to 10-mile annulus. The 9500-square-mile area encircling the coastal site is distinctly rural (58 individuals per square mile) in terms of population density. By comparison, the population density of the midwestern site within the 5-mile radius is nearly twice as great (95 vs 55) as the coastal site. Beyond five miles, the density increases to 126 individuals per square mile at 10 miles, and to 440 individuals per square mile in the 25- to 55-mile annulus. A large city is included in a portion of the 55-mile area encircling

the model fuel reprocessing facility. Cumulative population in the midwestern site is approximately six times greater than for the coastal site.

7.3 Radiation Doses from Airborne Effluents

Concentrations of radionuclides in air and on the surface of the soil are used to estimate the radiation doses to individuals at various distances and directions from the model fuel reprocessing plant. The dose conversion factors used in the AIRDOS code[6] to estimate doses resulting from submersion in the airborne effluent, exposure to contaminated ground surface, and intake of radionuclides through inhalation and ingestion are calculated with computer codes[14] which use dosimetric criteria of the International Commission on Radiological Protection and other recognized authorities.

Estimates of intake of radionuclides by man through terrestrial food chains were made with a model and computer code,[15] incorporated within the AIRDOS code, which considers transfers of radioactivity to man via ingestion of food crops, beef, and milk. Many basic environmental parameters used in this model are conservative, i.e., values are chosen to maximize intake by man. Reducing factors, such as shielding provided by dwellings and time spent away from the reference location, are not considered. Moreover, in estimating the dose to individuals via ingestion of plants, meat, and milk, all of the food consumed by an individual is assumed to be produced at the reference location specified in the calculation. This situation is not impossible, but extremely unlikely. Thus, individual dose estimates calculated by these methods are higher than actually expected.

Assumptions, models, and codes used to estimate radiation doses are given in ref. 8.

7.3.1 *Individual and Population Doses from Airborne Effluents*

Approximately 9% of the estimated total-body dose to individuals living within 55 miles of the model fuel reprocessing plant is the result of external exposure from submersion in air (3%) and exposure to contaminated ground (6%). Internal exposure from inhalation accounts for approximately 5% and ingestion contributes the remaining 86% of the total-body dose. It should be pointed out that the ingestion dose is based on conservative parameters such as assuming that 100% of the diet of the individual is grown and consumed in the area of residence.

The maximum annual total-body dose and maximum organ doses to individuals at 1.5 miles from the model plant are summarized in Table 7.4 for all radwaste treatment cases and for the southeastern-coastal and midwestern sites. This distance is representative of the boundary distance from a 1.5-metric ton/day HTGR fuel reprocessing plant. The total-population doses out to a distance of 55 miles are presented in Table 7.5. The doses to individuals at 1.5 mile can be multiplied by the following factors to obtain the doses at 1-mile distance: 1.004 for the midwestern site and 1.129 for the coastal site. Similarly, the factors for calculating the dose at 0.5 mile are 1.221 for the midwestern site and 1.126 for the coastal site. The contributions to total-body dose through the various exposure modes are listed in Table 7.6.

Maximum total-body doses at 1.5 miles for the midwestern site are approximately 1.3 times higher than those estimated for the coastal site due to meteorological differences. Population doses (Table 7.5) are also higher around the midwestern site due to the meteorological differences but primarily because six times as many people live within 55 miles of this site as of the coastal site. It is doubtful that either individuals or populations would, in fact, receive these estimated doses. The conservative assumptions listed in Sect. 7.3 tend to maximize the estimated doses.

The principal radionuclides in the airborne effluent which contribute to the maximum total-body and to certain organ doses of individuals are listed in Table 7.7. The percent contributions of radionuclides to the population doses out to 55 miles are shown in Tables 7.7(a) and 7.7(b). The major contributions to the maximum total-body dose of the individual in the Case 1 study are from tritium (26%), ^{14}C (61%), $^{134-137}Cs$ (4.9%), ^{129}I (3.8%), and ^{85}Kr (2.9%). The percentage contributions of the radionuclides to the total-body dose through various pathways are listed in Table 7.8. Carbon-14 contributes 61% of the total-body dose, and essentially all of this portion of the dose is via the ingestion pathway. The contribution of tritium (25.9% of the total-body dose) is primarily by ingestion (21.4%), and the remainder (4.5%) is through the inhalation pathway. Krypton-85 contributes 2.9%, all of which is by way of the submersion-in-air pathway. All of the ^{131}I dose is by the ingestion route, whereas ^{129}I contributes 2.3% of the total-body dose by ingestion and 1.5% by exposure to contaminated surfaces. The contribution of other radionuclides and their exposure pathways are shown in Table 7.8. The model plant releases large amounts of tritium in Cases 1 through 3, and since tritium is a major contributor to total body dose, the reduction in release of tritium in Case 4 by a factor of 100 reduces the total body dose at the midwestern plant from 29 millirem in Case 1 to 21 millirem in Case 4 (Table 7.4).

7.3.2 *Doses to Organs of Individuals from Airborne Effluents*

Maximum annual doses to organs of individuals at 1.5 miles from the model fuel reprocessing plant located on both sites are given in Table 7.4 for all radwaste treatment cases. The principal radionuclides in the airborne effluent which contribute to the organ doses of individuals are listed in Table 7.7, and the percent contribution of inhaled and ingested radionuclides to the dose of certain organs is shown in Table 7.9. Radiation doses to organs are largely dependent on the specificity for certain radionuclides to accumulate in certain organs. Therefore, a radwaste treatment case which greatly reduces the presence of a given radionuclide in the environment will reduce the dose to the organ that is exposed to the radionuclide via inhalation or ingestion pathways. Ingestion is the major pathway of exposure to internal body organs (Table 7.6). In the case of skin, submersion in the airborne effluent, where ^{85}Kr contributes approximately 100% of the submersion dose (Table 7.8), is the major exposure pathway. Skin is not included in the organs listed in Tables 7.4 and 7.7 because essentially all of the dose to skin is caused by ^{85}Kr (73 mrem/yr for the midwestern site and 56 mrem/yr for the southeastern-coastal site).

The relatively high organ dose of 205 millirem/year (Case 1, midwestern site) is received by the thyroid (Table 7.4) and, as shown in Table 7.7, is due primarily to ^{129}I (71%) and ^{131}I (20%). The maximum dose to the bone is 42 millirem/year with tritium accounting for 18%, ^{14}C for 57%, and ^{90}Sr for 11% of the dose. The dose to the GI tract is due primarily to the tritium (45%), ^{14}C (28%), and to a lesser extent to ^{106}Ru (12%).

The presence of ^{129}I in the airborne effluent from the reprocessing plant is particularly significant in terms of dose to the thyroid since iodine concentrates in the thyroid and the long-lived ^{129}I (half-life, 1.6 x 10^7 years) can accumulate in the earth and foods, thereby contributing to exposure from both ingestion of food and irradiation from contaminated earth. The shorter-lived ^{131}I (half-life, 8.05 days) accumulates to a lesser degree than ^{129}I and hence contributes a smaller fraction of the thyroid dose. For example, in the Case 1 study, where more than 4 times as much ^{131}I is released as ^{129}I, the dose from ^{129}I is almost four times higher than that for ^{131}I, i.e., an adult maximum, annual thyroid dose of 146 millirem for ^{129}I vs 41 millirem for ^{131}I. Similarly, ^{129}I accounts for 3.8% of the total body dose in Case 1 vs 0.3% for ^{131}I (Table 7.7). Ingestion is the major exposure pathway for both radionuclides. Iodine-131, because of its relatively short half-life, is primarily ingested in milk and to a lesser extent in vegetables. Iodine-129 also is ingested primarily in milk, but can accumulate in beef such that, under steady-state conditions, almost 22% of the thyroid dose from this radionuclide is due to the ingestion of beef. The estimates of ^{129}I intake via ingestion of beef[15] used in this study are similar to the amounts of ^{129}I found in beef and milk samples taken 1 to 2 miles from a fuel reprocessing plant in New York.[16]

The maximum annual dose to the thyroid of a one-year-old child from ^{129}I and ^{131}I at a distance of 1.5 miles, in the Case 1 study is 461 millirem, or approximately 2.5 times the adult dose. Similarly the ^{129}I dose of 210 millirem is about 1.5 times, and the ^{131}I dose of 251 millirem 6.1 times, the comparable adult doses due to differences in the diets.

As discussed in Sect. 7.3.1, these doses are estimated using the very conservative assumption that all of the food consumed by the individuals is produced at their sites of residence.

7.4 Post-Operational Exposures from Long-Lived Radionuclides Released into the Environment from an HTGR Fuel Reprocessing Plant

Potential releases of radionuclides during plant operation and estimations of resulting radiation doses to individuals and populations are discussed in Section 7.3.1. In this section, estimates are presented of future potential radiation doses to individuals and populations exposed after the reprocessing plant has ceased to operate (30 years after startup) to the long-lived radionuclides that are deposited on the land surface as a result of plant operation.

These estimates involve many complex considerations. All of the information necessary to make accurate predictions is not available. In the absence of complete information, estimates are made on the basis of the best current knowledge. Conservative assumptions are used in areas where deficiencies of knowledge exist. These assumptions make it likely that the estimates of health consequence are well above the probable effects. A more-detailed assessment of the radiation exposure to future generations from long-lived radionuclides has been included in a recent environmental analysis of the LMFBR program.[17]

7.4.1 *Post-Operational Source Term*

Prior to shutdown, the model fuel reprocessing plant (Case 1) releases approximately 2.7E+7 Ci of radionuclides, to which ^{85}Kr contributes 99.7%, per year of operation. During this time, individuals and populations are exposed to an airborne radioactive cloud from which they receive radiation doses due to immersion in the cloud and inhalation. At the same time, radionuclides deposited on the ground surface from the cloud lead to exposures from contaminated ground and ingestion of contaminated food. Radionuclides so deposited or, as in the case of ^{14}C and tritium, exchanged from the atmosphere into the biosphere accumulate in the environment around the plant. People will be exposed to decreasing quantities of radiation from long-lived nuclides for many years after the plant has ceased operating. Table 7.10 lists these radionuclides and the total quantities released from the model fuel reprocessing facility. The longest-lived radionuclides, ^{14}C, ^{129}I, ^{234}U, ^{235}U, ^{236}U, ^{238}U, ^{237}Np, ^{239}Pu, ^{240}Pu, ^{242}Pu, ^{241}Am, and ^{243}Am will remain in the environment for generations.

The distribution of these long-lived radionuclides around the plant must be defined in order to estimate the post-shutdown radiation dose to the population. For this assessment, it is assumed that essentially all of the ^{129}I and radioactive particulate elements are deposited in a 55-mile radius of the plant, or over an area of 2.46×10^{10} m^2. This follows from considerations of the meteorology at the model plant sites and from the use of a settling rate for particles of 1 cm/sec from a source which is released at a stack height of 100 meters. The same assumptions are used in estimating the doses to the population from releases from the operating plant. Other estimates of the deposition of these materials indicate that as much as 70% of the materials are deposited within 50 miles, when the release point is the top of a 100-m-high stack.[18] The ^{14}C, on the other hand, has a more complex mechanism of dispersal into and accumulation in the biosphere.[19] Estimates of dose from ^{14}C were made by assuming man reaches equilibrium with the ^{14}C in the atmosphere. Using the dose commitment model for atmospheric releases from UNSCEAR, this dose may be estimated by:

$$D(\infty) = \gamma_0 \, W/B \quad ,$$

where

$D(\infty)$ = the infinite dose commitment (millirems),
γ_0 = the dose rate (1.3 millirem/yr) from natural ^{14}C,
W = the quantity of ^{14}C released from the facility annually (Ci/yr),
B = the amount of natural ^{14}C produced annually (30,000 Ci/yr)

7.4.2 *Post-Operational Pathways of Exposure*

Resuspended Air Activity. - After airborne particulates are removed from the atmosphere and reach the ground by deposition and washout, they may again enter the atmosphere by resuspension processes. If they do, they may be inhaled. There is presently no general model which may be used to predict the levels of resuspended air activity with due regard to the geometrical configuration of the land surface, the particle characteristics of the deposited radioactivity and the parameters of host soil, the vegetation cover, and the meteorological conditions. These highly variable factors and

others related to land use, such as the disturbance of soil surfaces by human activity, must be considered in preparing a precise estimate of resuspended radioactivity.

A resuspension factor can be estimated from measurements made above aged contaminated soil and from consideration of natural tracers such as ^{238}U. Resuspension factors of 10^{-9} and 10^{-10} m^{-1} were obtained from recent measurements of ^{239}Pu made at the Nevada Test Site in an area contaminated 17 years previously. Several years after deposition, measurements of ^{239}Pu in the vicinity of the Rocky Flats plant indicated a resuspension factor of 10^{-9} m^{-1}.[17] Discounting airborne material of industrial origin, it appears from the data concerning movement of natural ^{238}U that a realistic estimate of the resuspension of aged radioactive material in surface soil lies between 10^{-8} and 10^{-10} m^{-1}.[18] This is in agreement with the field measurements for ^{239}Pu. An intermediate value of 1×10^{-9} is used in this survey to estimate the amounts of radionuclides inhaled over a long post-shutdown period for the relatively large, well-vegetated regions around a fuel reprocessing facility. It is assumed that this value remains constant even though the deposited radionuclides may not remain on or near the surface of the soil. Actually, a continual reduction in the availability of these materials beyond the current measurement experience of 20 years can be expected. Thus, the use of a constant resuspension factor is a conservative assumption which will maximize the estimated dose. Resuspended radionuclides are also assumed to enter terrestrial food pathways (vegetables, milk, and beef) via redeposition on foliage of crops and pastures. For estimating intake via inhalation of resuspended radionuclides, the expression is:

$$\text{Ci intake yr}^{-1} = \text{Ci m}^{-2} \times 10^{-9}\ \text{m}^{-1} \times 7200\ \text{m}^{3}\ \text{inhaled yr}^{-1}.$$

Ingestion. - The radionuclides that are not inhaled by man remain in the environment for times proportional to their radiological half-lives. During this time they may be ingested by man. Plants may be contaminated by direct deposition of airborne particles onto foliar parts and by root uptake of isotopes leached from or exchanged with particles deposited in soil. Plant uptake studies show that heavy elements are strongly excluded from plant uptake and poorly translocated by plant systems.

The fraction of long-lived radionuclides that enters man during their long existence in the environment will depend on their distribution, their chemical and physical behavior in the environment for thousands of years, and climatological conditions and land use patterns specific to the area. Sufficiently detailed and accurate knowledge regarding the many factors influencing the movement of these elements through the environment over the periods of hundreds to tens of thousands of years during which they may enter man through the ingestion pathways is not available to permit a precise estimate of the dose to man. It is appropriate, therefore, to estimate potential human ingestion using conservative parameters and assumptions. In preparing the estimate for this survey, it is assumed that plant material accumulates a concentration (C_f value) of uranium equal to 2.5×10^{-3}, thorium equal to 4×10^{-3}, plutonium equal to 1×10^{-3}, neptunium equal to 2.5×10^{-3}, americium equal to 2.5×10^{-4}, iodine equal to 2.0×10^{-2}, and nickel equal to 1.9×10^{-2}, of the concentration in the soil in which the plants grow, that there is no downward movement of the radionuclide in the soil beyond the root zone (15 cm), and that the radionuclide is not lost by drainage of water. With a soil density of 1.5 g cm^{-3}, the radionuclides deposited on a square meter of earth are contained in 2.25×10^{5} g of soil. Thus, the following expression is used, for example, to estimate the intake of uranium via ingestion of plants:

$$\text{Ci yr}^{-1} \text{ ingested} = (\text{Ci/m}^2) \times (2.5 \times 10^{-3} \text{ g soil/g plant}) \times (91{,}250 \text{ g plant ingested/year})/(2.25 \times 10^5 \text{ g soil/m}^2)$$

Additional intake from the ingestion of plants contaminated via resuspended radionuclides was calculated using the TERMOD code.[15]

Contaminated Ground. - Exposure via contaminated ground is also estimated. It is assumed that there is no loss of deposited radionuclide except through radioactive decay.

7.4.3 *Estimates of Post-Operational Doses*

The post-operational radiation dose to an individual residing within the uniformly contaminated area of 9.50×10^3 square miles or 2.46×10^{10} m^2 (the area within a 55-mile radius of the reprocessing plant) was estimated for total body and for the organs that are known to accumulate the long-lived radionuclides. No additional population assumptions are made, and population doses are expressed as person-rem per 3.6 million persons (actual population within the 55-mile radius of the midwestern plant). All radiation doses from ingestion and inhalation are 50-year dose commitments from one year of exposure, i.e., the dose an individual will accrue over a 50-year period (essentially a lifetime dose) from one year of intake of radionuclides after the plant is closed. It is assumed that the plant has operated 30 years prior to shutdown. External doses (exposure to contaminated ground) are annual doses from one year of exposure.

It is conservative to call a dose commitment an annual dose in the case of a single year's intake of long-lived radionuclides. However, for assessing a situation where people are continually exposed over long periods of time and radionuclides have reached steady-state conditions in the environment, dose commitments approximate annual doses.

Individual and Organ Dose. - As a result of the deposition of long-lived radionuclides such as the actinides, persons living within a 55-mile radius of the model HTGR fuel reprocessing plant will continue to receive some radiation dose above background long after plant operation has been terminated, or actually until the ultimate decay of all the radionuclides occurs. The average annual doses to the individual out to 55 miles for the various radionuclides and exposure modes are shown in Table 7.11. About 86% of the total body dose of 3.7×10^{-1} millirem results from the ingestion pathway. The average annual total body dose due to ^{14}C, which accounts for about 86% of the total dose, is 3.2×10^{-1} millirem. These doses are the average doses out to 55 miles, and the dose range, as a function of distance, will vary considerably over the 55-mile span.

The average annual doses to the organs resulting from the various radionuclides and for the major internal pathways are shown in Table 7.12. The thyroid, due primarily to the ^{129}I, receives the highest organ dose, which is about 2 times the dose to the bone and 2.4 times that to the kidney. Carbon-14 accounts for almost 100% of the dose to the bone, kidneys, and lungs and about 35% of the thyroid dose.

Population Doses. - The annual population doses to total body, bone, kidney, lung, and thyroid, given as person-rem per 3.6 million persons, are shown in Table 7.13. These doses (total body and organs) are again primarily due to ^{14}C, which accounts for 86% of the total-body dose. The thyroid receives the highest organ dose. The population total-body dose, 1.4×10^3 person-rem/3.6×10^6 people, is based on the actual population of a representative midwestern plant site.

7.5 Effect of Buoyancy of Hot Stack Gases on Plume Rise and Doses

The plume of stack gases released from the plant at temperatures above the ambient air temperature will rise because of a density-deficiency buoyancy; the plume rise due to this effect can exceed that due to momentum alone. This additional plume rise can reduce radiation doses at the plant boundary. A brief parametric study of this effect was performed for a release of ^{14}C assuming a gas flow of 300,000 cfm at the midwestern site. Table 7.14 lists fractional reductions in dose at 1.5 miles for stack gas temperatures ranging from 125 to 300^{0}F as compared with an ambient temperature stack gas release in which only momentum is considered in computing plume rise. It is apparent that very significant reductions in the 1.5-mile doses are produced by discharging heated gases from the plant stack. This reduction amounts to 85% when the stack-gas temperature is 300^{0}F. A brief study of heat losses from a 100-m stack showed that the temperature of air drops only a few Fahrenheit degrees on passing from the bottom of the stack, at 300^{0}F, to the top of the stack.

7.6 Nocturnal Versus Daytime Release of Carbon Dioxide

In this report the calculations of maximum doses from ^{14}C are based on daytime releases from the stack. However, a detailed analysis[20] of the local radiological impact of releases of $^{14}CO_2$ indicates that the timing of the release will strongly influence the maximum dose. Because of the limitation of photosynthesis to daylight hours, daytime release during the growing season will result in increased uptake of ^{14}C by local vegetation, and, hence, an increased transfer into the food-chain pathway, which ordinarily accounts for more than 99% of the ^{14}C dose to man. Therefore, this analysis suggests that significant local-dose benefits are obtainable from daytime holdup and nocturnal release of $^{14}CO_2$.

7.7 References

1. J. K. Soldat, "Environmental Evaluation of an Acute Release of ^{131}I to the Atmosphere," Health Phys. *11*, 1009 (1965).

2. B. Shleien, "An Evaluation of Internal Radiation Exposure Based on Dose Commitments from Radionuclides in Milk, Food, and Air," Health Phys. *18*, 267 (1970).

3. Federal Radiation Council, *Estimates and Evaluation of Fallout in the United States from Nuclear Weapons Testing Conducted Through 1962*, Report No. 4 (May 1963).

4. *Environmental Analysis of the Uranium Fuel Cycle. Part III. Nuclear Fuel Reprocessing*, U. S. Environmental Protection Agency, EPA-520/9-73-003-D (October 1973).

5. D. H. Slade, *Meteorology and Atomic Energy*, TID-24190 (1968).

6. R. E. Moore, *AIRDOS - A Computer Code for Estimating Population and Individual Doses Resulting from Atmospheric Releases of Radionuclides from Nuclear Facilities*, ORNL-TM-4687 (January 1975).

7. Since only limited joint frequency data are available from existing fuel reprocessing sites, the model evaluation was based on the arbitrary selection of data from St. Louis, Mo., and Wilmington, N. C., first order records for midwestern and coastal environments, respectively. Joint frequency velocity and direction data by stability class were provided in the STAR tabulation format by the National Climatic Center, Asheville, N. C., for a 5-year period (St. Louis, 1/65 to 12/69; Wilmington, 1/66 to 12/70).

8. G. G. Killough and L. R. McKay, eds., *A Methodology for Calculating Radiation Doses from Radioactivity Released to the Environment*, ORNL-4992 (March 1976).

9. F. A. Gifford, Jr., and D. H. Pack, "Surface Deposition of Airborne Materials," Nucl. Safety *4*(4), 76-80 (1962).

10. R. J. Engelmann, "The Calculation of Precipitation Scavenging," in D. H. Slade, *Meteorology and Atomic Energy*, TID-241900 (1968), pp. 208-21.

11. P. R. Coleman and A. A. Brooks, *PANS: A Program to Tally Population by Annuli and Sectors*, ORNL-TM-3923 (October 1972).

12. *USAEC Final Environmental Statement Related to the Operation of the Midwest Fuel Recovery Plant*, Docket 50-268 (December 1972), p. 9.

13. *USAEC Draft Environmental Statement Related to the Barnwell Nuclear Fuel Plant,* Docket No. 50-332 (January 1973), pp. II-5, II-6, II-7. Additional population data appear in the *Allied-Gulf Nuclear Services Environmental Report - Barnwell Nuclear Fuel Plant* (November 1971).

14. W. D. Turner, S. V. Kaye, and P. S. Rohwer, *EXREM and INREM Computer Codes for Estimating Radiation Doses to Populations from Construction of a Sea-Level Canal with Nuclear Explosives*, K-1753 (Sept. 16, 1968).

15. R. S. Booth and S. V. Kaye, *A Preliminary Systems Analysis Model of Radioactivity Transfer to Man from Deposition in a Terrestrial Environment*, ORNL-TM-3135 (October 1971).

16. P. J. Magno, T. C. Reavey, and J. C. Apidianakis, *Iodine-129 in the Environment Around a Nuclear Fuel Reprocessing Plant*, U. S. Environmental Protection Agency (October 1972).

17. *Proposed Final Environmental Statement, Liquid Metal Fast Breeder Reactor Program, Vol. II, Environmental Impact of the LMFBR*, USAEC, WASH-1535 (December 1974).

18. K. E. Cowser, M. Reever, P. G. Fowler, and W. M. Culkowski, "Evaluation of the Potential Radiological Impact of Gaseous Effluents on Local Environments," *Proceedings of the International Symposium on Radioecology Applied to the Protection of Man and His Environment*, EUR-4800 (September 1971).

19. "Ionizing Radiation: Levels and Effects," *Report of United Nations Scientific Committee on the Effects of Atomic Radiation, Vol. I, Levels*, United Nations, New York, p. 29 (1972).

20. G. G. Killough, K. R. Dixon, N. T. Edwards, B. D. Murphy, P. S. Rohwer, W. R. Harris, and S. V. Kaye, *Progress Report of Evaluation of Potential Impact of ^{14}C Releases from an HTGR Reprocessing Facility*, ORNL-TM-5284 (in press).

8.0 CORRELATION OF ENVIRONMENTAL IMPACT WITH COST OF WASTE TREATMENT

8.1 Comparison of Radwaste Treatment Costs with Radiological Dose

The relationships between the annual costs of the radwaste treatment systems described in Sects. 4.5 and 6.0 and the impact of radioactive releases, i.e., the dose commitments, from these systems described in Sect. 7.0 are presented in this section. The accuracy of the cost estimates is about ±30%, and the dose commitments represent population annual average or adult maximum values. Many of the treatment systems are in an early stage of development, and their technical feasibilities have not been verified in plant installations. Similarly, many of the models for the movement and concentration of the radionuclides in the environment are receiving additional study to increase their accuracy. In all cases, conservative assumptions are made in selecting treatment efficiency ratings for equipment, in estimating costs, in defining the movement of radionuclides in the environment, and in selecting food and liquid consumption patterns such that the costs and doses are maximized.

The annual costs and dose commitments for the base case (Case 1) and succeeding case studies (Cases 2 through 7) at the midwestern and east-coastal sites are summarized in Tables 8.1-8.4 and Figs. 8.1 and 8.2. Each cost is the estimated total annual cost required for the additional radwaste treatment system for a given case beyond that required for Case 1; i.e., the incremental cost. Costs are also presented in Tables 8.1-8.4 as incremental dollars per kilogram of heavy metal (HM) for the additional radwaste treatments. Cases 2b, 2c, and 2d include the cost of the iodine-removal ion-exchange unit of Case 2a; the cost of Case 7 is the cumulative cost due to the additional units of equipment listed in Tables 8.3 and 8.4. Dose commitments are reported on several bases: (1) population annual average total body, GI tract, bone, and thyroid doses (person-rem) out to 55 miles from the plant, which are the total doses from all radioactive materials released from the plant in a specified case; (2) incremental decreases in these annual average values, with respect to Case 1; and (3) maximum annual total-body doses (millirem) received by an adult at a distance of 1.5 miles from the stack. Factors to convert doses at 1.5 miles to doses at 0.5 mile and 1.0 mile are given in Sect. 7.0 and in the footnote of Table 7.4 for midwestern and east-coastal sites. In addition, individual maximum annual and population annual doses to various body organs are given in Sect. 7.0. The population annual average doses to total body, GI tract, bone, and thyroid, and the adult maximum annual dose are used to illustrate the cost/benefit relationships in this section of the report. The total body dose is selected because of its obvious importance; GI tract, bone, and thyroid are selected because the three principal radionuclides (^{3}H, ^{14}C, and ^{129}I) that contribute to total-body dose also contribute to the GI tract, bone, and thyroid doses. Internal exposure to radiation through inhalation and ingestion of radionuclides accounts for about 91% of the total body dose to individuals and population. The major contributors to this dose are ^{3}H, ^{14}C, ^{129}I, ^{134}Cs, ^{137}Cs, and ^{85}Kr.

Population Annual Average Total-Body Dose. - The annual cost of additional radwaste treatment equipment and the incremental decreases in doses to total body, GI tract, bone, and thyroid (in person-rem) out to a distance of 55 miles from ground zero of the plant stack, are presented in Tables 8.1 and 8.2; some of the data from Tables 8.3 and 8.4 are presented in Fig. 8.1.

Small reductions (3-4%) in total-body dose are achieved by decreasing the release of ^{129}I, ^{131}I, and particulates in Cases 2a-2d and 3 at annual costs varying from $35,000 to $471,000. The iodine-removal Cases 2a-2d decrease thyroid doses by 82-86%, Fig. 8.2; particulate-removal Case 3 decreases the dose to the GI tract by 17%. A 26% reduction in the total-body dose is achieved in Case 4 at an annual cost of $664,000 by retaining tritium in the plant. Installing the KALC process, at an annual cost of $3,237,000, reduces the population annual-average total-body dose by 34%, primarily by retaining 1/3 of the tritium and 99% of ^{85}Kr, ^{134}Cs, and ^{137}Cs within the plant. By using tritium bakeout and retaining tritium and ^{14}C in the plant, as in Case 7, the total-body dose is reduced to about 1% of its base-case value at an annual cost of $12,945,000. Some of these values are combined in a comparison of incremental annual costs for radwaste treatment with incremental reductions in population annual-average total-body dose out to 55 miles from the plant in Fig. 8.1; cost/benefit ratios from Tables 8.1 and 8.2 were used to obtain the combined-treatment values listed in Tables 8.3 and 8.4. The cost/benefit varies from $350/person-rem for Case 2a to $5,500/person-rem for Case 6 at the midwestern site; at the east-coastal site, the range is from $1,750/person-rem, Case 2a, to $19,000/person-rem in Case 6. At both sites the smallest cost/benefit unit is the ion-exchange bed to remove iodide from the liquid stream flowing from the Iodine Removal Partial Evaporator to the Excess Water Vaporizer, shown in Fig. 4.5. However, this only reduces the total-body dose by about 3%; it reduces the dose to the thyroid by 83%, as noted above. The largest reduction in dose for the smallest cost is due to tritium bakeout and removal, Case 4; at the midwestern and coastal sites the cost/benefits are $1,100 and $3,700/person-rem, respectively, and the population total-body dose is reduced by 26%.

Cumulative effects of adding radwaste systems to the base case are shown for one scenario in Tables 8.3 and 8.4 and Fig. 8.1. The base case is modified by the additions indicated to produce Case 7 and a 99% reduction of the population annual-average total-body dose at a cost/benefit of $5,400/person-rem at the midwestern site and of $19,000/person-rem at the east-coastal site.

Thyroid Dose. – The annual costs of reducing the population annual-average thyroid doses can be calculated from data listed in Tables 8.1 and 8.2, Cases 2a-2d. These cases were chosen to illustrate iodine retention, since this element is the major cause of the high thyroid dose. Thyroid doses for Case 1 and for successively improved radwaste treatment cases are listed in Tables 8.3 and 8.4 and plotted in Fig. 8.2. The iodine-removal ion exchange unit provides the greatest reduction in thyroid dose at cost/benefits at midwestern and east-coastal sites of $4/person-rem and $12/person-rem, respectively. Further reductions in thyroid doses are produced by all of the additional treatments employed in Cases 2b-2d, but at costs higher than those of the ion exchanger. Thus, at the midwestern site, the incremental (in addition to those of the ion exchanger) cost/benefits of (1) adding a dissolver off-gas $Hg(NO_3)_2$-HNO_3 scrubber, (2) replacing the $Hg(NO_3)_2$-HNO_3 scrubber by the Iodox process, and (3) replacing the $Hg(NO_3)_2$-HNO_3 scrubber by cadmium zeolite are, respectively, $1,350/thyroid person-rem, $1,450/person-thyroid-rem, and $1,150/person-thyroid-rem; corresponding values for these three increments at the east-coastal site are $4,060, $4,360, and $3,440, respectively.

As may be seen from Tables 7.7(a) and (b), the iodine isotopes ^{129}I and ^{131}I account for about 87% of the total thyroid dose. Most of the residual 13% is due to tritium, which contributes 5-6%, and ^{14}C, which also contributes about 6%. For this reason, tritium retention in the plant, by bakeout and trapping on molecular sieve or, to a lesser extent, in the KALC system precooler, provides significant reduction in the thyroid dose, as noted in Tables 8.3 and 8.4 and Fig. 8.2.

GI Tract Dose. – As shown in Tables 7.7(a) and (b), tritium and ^{14}C contribute about 75% of the radiation dose received by the GI tract. Semivolatile ruthenium and particulates contribute more to the dose to the GI tract (19% of total) than to other organs. These nuclides can be retained more completely by any additional semivolatile- and particulate-removal equipment in the off-gas and ventilation lines. The sand filter of Case 3, with an assumed particulate retention of 90%, reduces the emission of these nuclides at a cost/benefit of $1300/person-GI tract-rem at the midwestern site and $3800/GI tract person-rem at the east-coastal site.

Bone Dose. – The dose commitment to human bone is due to ^{14}C, tritium, and ^{90}Sr, in decreasing importance, as shown in Tables 7.7(a) and (b). Removal of 99% of the ^{14}C, about 1/3 of the tritium, and 99% of most of the other materials (by use of the KALC process) plus fixation of CO_2 in Case 6 provide cost/benefit values at the midwestern and east-coastal sites of $3,500 and $11,700/person-bone-rem, respectively.

Lung Dose. – The lung dose is due primarily to ^{14}C (40%), tritium (38%), and to ^{85}Kr (11%), Tables 7.7(a) and (b). Except for ^{220}Rn, ^{129}I, ^{134}Cs, and ^{137}Cs, which contribute 1.6%, 2.6%, 1.9%, and 2.7%, respectively, at the midwestern site, to the lung dose, all other radioactive nuclides contribute less than 1% to this dose. Thus, the lung dose is reduced by tritium bakeout and sorption on molecular sieves, Case 4, and by radwaste treatments that use the KALC process and/or conversion of CO_2 to $CaCO_3$, Cases 5, 6, and 7. The tritium bakeout and water sorption system of Case 4 reduces the individual annual lung dose by 38% at a cost/benefit ratio of $1,080 at the midwestern site and $3,660/lung person-rem at the east-coastal site.

The necessity for a ^{220}Rn-holdup system is most obvious in calculations of the lung dose. This nuclide contributes only 1.6% to the lung dose in the base Case 1, wherein the ^{220}Rn decontamination factor, Table 4.4, is 10^6 due to 20-min holdup. If this DF were reduced to 10^4 by lowering the holdup time to 12.3 min, the annual individual lung dose due to ^{220}Rn would increase from about 26 person-rem to 2600 person-rem at the midwestern site, thereby more than doubling the base case dose of 1600 person-rem/yr (Table 7.4) to 4180 person-rem.

Adult Maximum Total Body Dose. – The annual costs and reductions of adult maximum total body doses at the two sites are presented in Tables 8.1 and 8.2 for individual case studies; Tables 8.3 and 8.4 summarize costs and benefits of the particular combination chosen to produce the Case 7 study. Table 7.7 shows that tritium and ^{14}C releases are responsible for 26% and 61%, respectively, of the total body doses. The quantity of tritium produced in HTGRs will depend on the quantity of lithium impurity in the fuel element graphite, uranium, and thorium. However, even if there were no lithium impurities, tritium, formed from ternary fission, would still be a major contributor (Table 4.4 and Sect. 4.5.1), second only to ^{14}C in terms of total-body dose. Reducing the adult maximum total-body dose is achieved by the same equipment as reduces population total-body dose, namely, equipment to retain ^{14}C and tritium; smaller reductions in total-body dose are achieved by retaining ^{129}I, ^{85}Kr, ^{137}Cs, and ^{134}Cs, in reducing order, as shown in Table 7.7.

Combined Reprocessing-Refabrication Plant Doses. – Roddy et al.[1] have correlated waste treatment costs and the environmental impact of an HTGR fuel refabrication plant which is expected to be located adjacent to the reprocessing plant. Population annual-average 50-year dose commitments in the base case of the refabrication plant at the midwestern site are as follows: total-body, 7.54 person-rem; GI tract, 6.08 person-rem; bone, 18.3 person-rem; thyroid, 7.21 person-rem; and lungs, 11.0 person-rem. By comparison with corresponding base-case values for the reprocessing plant, namely 2360, 1330, 3600, 10,400, and 1600 person-rem, respectively, Table 7.5, it

is apparent that the dose commitment due to the refabrication plant is, in all cases, less than 1% of that due to reprocessing.

8.2 Comparison of Radwaste Treatment Costs with Fuel Reprocessing Costs, Power Costs, and Total Capital Investment

Radwaste treatment costs can be compared with fuel reprocessing costs, power costs, and total capital investment in establishing the relative importance of alternative cost factors in a cost/benefit analysis.

Fuel Reprocessing Costs. - The annual reprocessing cost in the base Case 1 is \$324/kg (U + Th) (Sect. 6.0, Table 6.1). In Cases 2 through 7, the costs for additional radwaste treatment systems increase from \$0.08 to \$28.77/kg (U + Th), or about 0.025 to 8.9% of the base-case reprocessing cost. For comparison, the increased treatment cost in the most advanced case study pertaining to the LWR fuel reprocessing plant (ref. 7.2) was \$30.33/kg U.

Capital and Power Costs. - The incremental capital costs for Cases 2a through 7 range from \$0.092 million to \$18.685 million, or up to about 4.7% of the \$400 million capital cost of the base plant. The annual costs for Cases 2a through 7 range from about \$0.035 million to \$12.945 million, which is equivalent to contributions to the power cost of 9.6×10^{-5} and 3.55×10^{-2} mill/kWhr, respectively (Sect. 6.0, Table 6.1). All of these values are less than about 1% of an estimated total generation cost of 10 mills/kWhr.

8.3 Reference

1. J. W. Roddy, R. E. Blanco, G. S. Hill, R. E. Moore, R. D. Seagren, and J. P. Witherspoon, *Correlation of Radioactive Waste Treatment Costs and the Environmental Impact of Waste Effluents in the Nuclear Fuel Cycle – Fabrication of High-Temperature Gas-Cooled Reactor Fuel Containing Uranium-233 and Thorium*, ORNL/NUREG/TM-5 (in press).

Table 4.1. Relative inhalation hazard for radionuclides in the fuel charged to the HTGR fuel reprocessing plant[a]

Nuclide	Half-life	Air volume required to reduce activity to RCG (m^3/MTHM)
Gaseous		
H-3	12.33 y	9.83E+09
C-14	5730 y	1.65E+07
Ar-37	34.8 d	6.11E+08
Kr-85	10.73 y	2.02E+11
I-129	1.59E+7 y	6.19E+09
I-131	8.04 d	1.63E+10
Rn-220	55.6 s	1.77E+16
Rn-222	3.824 d	4.39E+07
Semivolatile		
Ru-103	39.6 d	2.40E+13
Ru-106	369 d	6.84E+14
Particulate		
Co-60	5.272 y	3.30E+12
Sr-89	50.5 d	1.15E+15
Sr-90	29 y	9.64E+15
Y-91	58.6 d	4.49E+14
Zr-95	65.5 d	5.81E+14
Nb-95	35.1 d	3.67E+14
Te-127m	109 d	2.08E+13
Te-129m	33.4 d	5.65E+13
Cs-134	2.06 y	1.72E+15
Cs-137	30.1 y	6.05E+14
Ce-144	284.4 d	8.62E+15
Eu-154	8.6 y	1.35E+14
Ra-224	3.64 d	1.09E+17
Th-228	1.913 y	4.14E+15
Pa-233	27.0 d	1.34E+14
U-232	72 y	9.00E+14
U-233	1.58E+5 y	5.51E+13
U-234	2.44E+5 y	1.40E+13
Np-237	2.14E+6 y	9.16E+12
Np-239	2.35 d	1.84E+08
Pu-238	87.8 y	1.47E+17
Pu-239	2.44E+4 y	1.36E+14
Pu-240	6540 y	2.82E+14
Pu-241	15 y	1.87E+15
Pu-242	3.87E+5 y	3.50E+12
Am-241	433 y	4.72E+13
Am-243	7370 y	1.84E+13
Cm-242	163 d	2.63E+14
Cm-244	17.9 y	2.79E+15
Total fission products		2.40E+16
Total actinides		2.70E+17

[a]Air dilution volumes pertain to 1 MTHM after 160 days of decay. Radiation Concentration Guides (RCG) were taken from 10 CFR 20, Appendix B, Table 2, Column 1.

Table 4.2. Heavy metals charged to and discharged from the reference 1000-MW(e) HTGR

(30-year lifetime average annual values from CITATION calculations[a])

	Thorium + 23R		IM → 25R		25R → 25W		Totals	
Nuclide	Charge	Discharge	Charge	Discharge	Charge	Discharge	Charge	Discharge
Th-232	8099.91	7570.89	0.00	0.00	0.00	0.00	8099.91	7570.89
U-233	194.58	233.75[b]	0.00	0.00	0.00	0.00	194.58	233.75
U-234	63.86	79.14	3.83	1.83	1.49	0.69	69.18	81.66
U-235	22.45	28.45	377.07	62.00	45.77	7.08	445.29	97.53
U-236	12.96	18.18	0.85	52.73	45.54	39.55	59.35	110.46
U-238	0.00	0.00	23.33	17.89	15.03	11.38	38.36	29.27
Np-237	0.00	2.44	0.00	6.71	0.00	6.58	0.00	15.73
Pu-238	0.00	1.47	0.00	3.67	0.00	4.59	0.00	9.73
Pu-239	0.00	0.17	0.00	0.94	0.00	0.90	0.00	2.01
Pu-240	0.00	0.00	0.00	0.15	0.00	0.11	0.00	0.26
Pu-241	0.00	0.00	0.00	0.14	0.00	0.10	0.00	0.24
Pu-242	0.00	0.00	0.00	0.12	0.00	0.09	0.00	0.21

[a]Units are kilograms. Values are based on recycle of uranium in 23R and 25R streams one year after discharge.

[b]After decay of Pa-233 to U-233.

Table 4.3. Heavy metals charged to and discharged from the reference 1000-MW(e) HTGR (Charge at start of 20th year; discharge at end of 23rd year. From CITATION calculations.[a])

	Thorium + 23R		IM → 25R		25R → 25W		Totals	
Nuclide	Charge 20	Discharge 23	Charge 20	Discharge 23	Charge 20	Discharge 23	Charge	Discharge
Th-232	7264.58	6748.59	0.00	0.00	0.00	0.00	7264.58	6748.59
U-233	216.26	220.01[b]	0.00	0.00	0.00	0.00	216.26	220.01
U-234	82.71	86.50	3.31	1.47	1.45	0.64	87.47	88.61
U-235	31.31	33.62	326.37	43.58	41.58	5.77	399.26	82.97
U-236	19.33	25.32	0.74	47.33	46.81	39.46	66.88	112.11
U-238	0.00	0.00	28.19	15.09	14.92	11.15	43.11	26.24
Np-237	0.00	3.72	0.00	6.35	0.00	6.88	0.00	16.95
Pu-238	0.00	2.42	0.00	3.53	0.00	4.92	0.00	10.87
Pu-239	0.00	0.29	0.00	0.86	0.00	0.94	0.00	2.09
Pu-240	0.00	0.00	0.00	0.13	0.00	0.11	0.00	0.24
Pu-241	0.00	0.00	0.00	0.12	0.00	0.10	0.00	0.22
Pu-242	0.00	0.00	0.00	0.11	0.00	0.09	0.00	0.20

[a]Units are kilograms. Values are based on recycle of uranium in 23R and 25R streams one year after discharge.

[b]After decay of Pa-233 to U-233.

Table 4.4. Source terms for the model HTGR fuel reprocessing plant[a]

Nuclide	From fissile and fertile metals (Ci/yr) Thorium	23R Stream	25R Stream	25W Stream	Total[b]	Total (Ci/MTHM)	From graphite and impurities: Impurity and conc. (ppm)	Nuclide activity (Ci/yr)	From oxygen and silicon and fuel impurities: Impurity and conc. (ppm)	Nuclide activity (Ci/yr)	Total available activity (Ci/yr)	Case 1[f] (DF)	Case 1[f] (Ci/yr)	Iodine control: Case 2a (Ci/yr)	Case 2b (Ci/yr)	Case 2c (Ci/yr)	Case 2d (Ci/yr)	Particulate control Case 3 (Ci/yr)	Tritium control Case 4 (Ci/yr)	Noble gas control Case 5 (Ci/yr)	^{14}C + noble gas control Case 6 (Ci/yr)	Composite best Case 7 (Ci/yr)
Volatile																						
H-3	2.10E+5	1.30E+5	2.04E+5	3.11E+4	5.39E+5	1.28E+3	Li 0.05	7.43E+4	Li 2.0	2.72E+5	8.85E+5	1	8.9E+5		Same as Case 1			Same as Case 1	8.9E+3	3.0E+5	3.0E+5	8.9E+3
							Be															
							B 60.	2.19E+4														
							Graphite[d]	7.49E+4														
C-14							Graphite[d]	1.66E+3	Oxygen[e]	1.01E+2	7.42E+3	1	7.4E+3						Same as Case 1	7.4E+3	7.4E+1	7.4E+1
							N 30.	5.66E+3														
							Ca 320.	1.10E+4														
Ar-37											1.10E+4	1	1.1E+4							1.1E+2	Same as Case 5	1.1E+2
Kr-85	1.37E+7	7.08E+6	5.76E+6	7.36E+5	2.65E+7	6.06E+4					2.65E+7	1	2.7E+7							2.7E+5		2.7E+5
I-129	2.75E+1	1.46E+1	1.17E+1	1.74E+0	5.38E+1	1.23E-1					5.38E+1	20	2.7E+0	1.1E-1	5.4E-3	5.4E-3	6.7E-3			2.7E+0		5.4E-3
I-131	5.60E+2	8.26E+1	7.13E+1	1.97E+1	7.13E+2	1.63E+0					7.13E+2	60	1.2E+1	2.4E-1	7.1E-2	7.1E-2	7.1E-2			1.2E+1		7.1E-2
Rn-220[c]	5.48E+10	2.48E+10	1.21E+6	8.11E+5	7.96E+10	4.49E+2					7.96E+10	1E+6	8.0E+4		Same as Case 1					8.0E-2		8.0E-2
Rn-222	5.84E+1	2.75E-2	1.32E-3	5.18E-4	5.84E+1	8.82E-1					5.84E+1	1	5.8E+1							5.8E-1		5.8E-1
Semi-Volatile																						
Ru-103	2.04E+7	4.74E+6	5.60E+6	1.59E+6	3.08E+7	7.18E+4					3.08E+7	1E+8	3.1E-1					3.1E-2		3.1E-3		3.1E-4
Ru-106	2.26E+7	1.04E+7	2.04E+7	8.00E+6	5.34E+7	1.36E+5					5.34E+7	1E+8	5.3E-1					5.3E-2		5.3E-3		5.3E-4
Particulate																						
Co-60									Co 5.	4.45E+5	4.45E+5	5E+8	8.9E-4					8.9E-5		8.9E-6		8.9E-7
									Ni 10.	1.05E+2												
Sr-89	1.21E+8	1.77E+7	1.34E+7	2.23E+6	1.52E+8	3.43E+5					1.52E+8	5E+8	3.0E-1					3.0E-2		3.0E-3		3.0E-4
Sr-90	5.13E+7	3.10E+7	4.21E+7	5.37E+6	1.24E+8	2.88E+5					1.24E+8	5E+8	2.5E-1					2.5E-2		2.5E-3		2.5E-4
Y-91	1.50E+8	2.56E+7	2.22E+7	3.77E+6	1.98E+8	4.48E+5					1.98E+8	5E+8	4.0E-1					4.0E-2		4.0E-3		4.0E-4
Zr-95	1.92E+8	3.30E+7	2.95E+7	5.99E+6	2.55E+8	5.79E+5			Zr 50	8.80E+3	2.55E+8	5E+8	5.1E-1					5.1E-2		5.1E-3		5.1E-4
Nb-95	3.64E+8	6.32E+7	5.68E+7	1.14E+7	4.84E+8	1.10E+6			Zr 50	1.64E+4	4.84E+8	5E+8	9.7E-1					9.7E-2		9.7E-3		9.7E-4
									Nb 50	6.60E+3												
Te*-127	7.88E+6	9.39E+5	3.95E+5	1.25E+5	9.21E+6	2.08E+4					9.21E+6	5E+8	1.8E-2					1.8E-3		1.8E-4		1.8E-5
Te*-129	2.13E+6	2.48E+5	1.65E+5	4.77E+4	2.54E+6	5.76E+3					2.54E+6	5E+8	5.1E-3					5.1E-4		5.1E-5		5.1E-6
Cs-134	9.26E+7	7.70E+7	1.22E+8	1.63E+7	2.93E+8	6.84E+5			Cs 10	1.06E+6	2.94E+8	5E+8	5.9E-1					5.9E-2		5.9E-3		5.9E-4
Cs-137	5.41E+7	3.26E+7	4.31E+7	5.98E+6	1.30E+8	3.02E+5					1.30E+8	5E+8	2.6E-1					2.6E-2		2.6E-3		2.6E-4
Ce-144	4.35E+8	1.37E+8	1.76E+8	2.67E+7	7.48E+8	1.72E+6					7.48E+8	5E+8	1.5E+0					1.5E-1		1.5E-2		1.5E-3
Eu-154	1.80E+6	1.42E+6	2.50E+6	3.58E+5	5.72E+6	1.35E+4					5.72E+6	5E+8	1.1E-2					1.1E-3		1.1E-4		1.1E-5
Ra-224[c]	9.69E+6	4.38E+6	2.14E+2	1.43E+2	1.41E+7	3.13E+4					1.41E+7	5E+8	2.8E-2					2.8E-3		2.8E-4		2.8E-5
Th	2.23E+5	8.54E+4	5.61E+0	2.54E+0	3.08E+5	6.85E+2					3.08E+5	5E+7	6.2E-3					6.2E-4		6.2E-5		6.2E-6
Th-228[c]	1.89E+5	8.53E+4	4.49E+0	2.05E+0	2.74E+5	6.10E+2					2.74E+5	5E+7	5.5E-3					5.5E-4		5.5E-5		5.5E-6
Pa-233	3.62E+8	1.05E+2	3.00E+2	2.47E+2	3.62E+8	8.04E+5					3.62E+8	5E+8	7.2E-1					7.2E-2		7.2E-3		7.2E-4
U	4.20E+5	6.80E+4	6.63E+2	3.65E+2	4.89E+5	1.09E+3					4.89E+5	5E+7	9.8E-3					9.8E-4		9.8E-5		9.8E-6
U-232	3.11E+5	5.33E+4	8.99E+0	6.30E+0	3.64E+5	8.10E+2					3.64E+5	5E+7	7.3E-3					7.3E-4		7.3E-5		7.3E-6
U-233	9.43E+4	4.86E+3	1.36E-2	6.40E-3	9.92E+4	2.20E+2					9.92E+4	5E+7	2.0E-3					2.0E-4		2.0E-5		2.0E-6
U-234	1.51E+4	9.80E+3	3.67E+2	1.52E+2	2.53E+4	5.65E+1					2.53E+4	5E+7	5.1E-4					5.1E-5		5.1E-6		5.1E-7
Np-237	6.31E+0	1.05E+2	3.01E+2	2.47E+2	4.12E+2	1.47E+0					4.12E+2	5E+8	8.2E-7					8.2E-8		8.2E-9		8.2E-10
Np-239	9.42E-1	2.02E+2	1.46E+3	1.31E+3	1.66E+3	6.61E+0					1.66E+3	5E+8	3.3E-6					3.3E-7		3.3E-8		3.3E-9
Pu	4.68E+4	1.71E+6	5.39E+6	5.09E+6	7.15E+6	2.72E+4					7.15E+6	5E+8	1.4E-2					1.4E-3		1.4E-4		1.4E-5
Pu-238	3.94E+4	1.23E+6	3.36E+6	3.20E+6	4.63E+6	1.74E+4					4.63E+6	5E+8	9.2E-3					9.2E-4		9.2E-5		9.2E-6
Pu-239	1.94E+1	7.31E+2	2.91E+3	2.56E+3	3.66E+3	1.38E+1					3.66E+3	5E+8	7.3E-6					7.3E-7		7.3E-8		7.3E-9
Pu-240	2.96E+1	1.49E+3	6.09E+3	5.52E+3	7.61E+3	2.92E+1					7.61E+3	5E+8	1.5E-5					1.5E-6		1.5E-7		1.5E-8
Pu-241	7.38E+3	4.80E+5	2.03E+6	1.88E+6	2.52E+6	9.77E+3					2.52E+6	5E+8	5.0E-3					5.0E-4		5.0E-5		5.0E-6
Pu-242	1.14E-1	1.45E+1	8.00E+1	7.43E+1	9.46E+1	3.75E-1					9.46E+1	5E+8	1.9E-7					1.9E-8		1.9E-9		1.9E-10
Am-241	8.81E+0	7.44E+2	3.50E+3	3.27E+3	4.25E+3	1.67E+1					4.25E+3	5E+8	8.5E-6					8.5E-7		8.5E-8		8.5E-9
Am-243	9.42E-1	2.02E+2	1.46E+3	1.31E+3	1.66E+3	6.60E+0					1.66E+3	5E+8	3.3E-6					3.3E-7		3.3E-8		3.3E-9
Cm-242	3.70E+2	6.55E+4	4.07E+5	3.75E+5	4.73E+5	1.88E+3					4.73E+5	5E+8	9.4E-4					9.4E-5		9.4E-6		9.4E-7
Cm-244	9.34E+1	3.40E+4	3.42E+5	2.90E+5	3.76E+5	1.48E+3					3.76E+5	5E+8	7.5E-4					7.5E-5		7.5E-6		7.5E-7
Total Rare Earth Elements											1.70E.9	5E+8	3.4E+0					3.4E-1		3.4E-2		3.4E-3
Total Fission-Product Particulates											3.88E+9	5E+8	7.8E+0					7.8E-1		7.8E-2		7.8E-3
Total Th + U											7.97E-5	5E+7	1.6E-2					1.6E-3		1.6E-4		1.6E-5
Total Actinides Excluding Th + U											3.77E-8	5E+8	7.5E-1					7.5E-2		7.5E-3		7.5E-4

Annual Average Stream Power and Burnup Data					
Power, MW/MTHM	26.94	465.1	469.5	252.7	64.26
Burnup, MWd/MTHM	39,336	679,065	685,404	368,960	93,826
20th Cycle Stream Power and Burnup Data					
Power, MW/MTHM	26.94	453.8	461.6	240.8	67.50
Burnup, MWd/MTHM	39,336	662,476	673,986	351,540	98,549

[a]The primary bases of these calculations, performed with the ORIGEN code, are as follows: (1) the lifetime average annual fuel requirement; (2) 100 ppm Th-230 in the thorium; (3) a lifetime average annual content of 750 ppm U-232 in the 23R stream; (4) time from fuel discharge to reprocessing is 160 days; (5) the activity, in Ci/yr, pertains to 450 MTHM (Th + U) charged to a 1000-MW(e) HTGR each year; (6) the 23R and 25R streams of uranium are recharged 1 year after discharge from the reactor; (7) there are 10.93 MT graphite/MTHM.

[b]This is the sum of the contributions of the thorium, 23R, and 25R streams. The 25W stream is not included since it is assumed to be retired to storage without reprocessing.

[c]The ORIGEN code prints quantities of activity that are present in the fuel. In order to determine the quantity of a nuclide formed per year when the nuclide has a precursor of more or less constant activity, it is necessary to perform the calculation for dN/dt, the rate of formation of a nuclide (such as ^{220}Rn, ^{224}Ra, etc.), and integrate this for one year; this dN/dt is also the rate of decay.

$$\int_0^1 (dN/dt)\, dt = (\ln 2/\tau_{1/2}) \int_0^1 dt \quad ,$$

where N is the activity, in Ci/MTHM or similar units, listed by ORIGEN, and t is in units of year in our case. As an example, consider the 1.393E+5 Ci ^{220}Rn present in the thorium stream discharged during 1 year from fuel that entered reactors as 450 MTHM (see Table 4.2). The quantity $\ln 2/\tau_{1/2}$ = 3.934E+5/yr when the 55.6-sec half-life of ^{220}Rn is converted to years. Multiplying 1.393E+5 Ci ^{220}Rn/450 MTHM by 3.934E+5/yr gives 5.48E+10 Ci ^{220}Rn/450 MTHM/year. This must be added to the 1.393E+5 Ci ^{220}Rn already present at discharge. In this case, the total is still 5.48E+10 Ci ^{220}Rn/450 MTHM/yr. Similar calculations were performed for ^{224}Rn and ^{228}Th.

[d]This is all the carbon in the core, corresponding to a lifetime average annual value of 10.93 MTC/MTHM.

[e]This is the oxygen that corresponds to all thorium being in the form ThO_2.

[f]The decontamination factors are taken from reference 2 except for ^{220}Rn whose DF is calculated on the following basis: there will be at least 20 minutes holdup of all off-gases from the burning of the thorium and 23R streams, including graphite blocks, and from the vessels of the Thorex process. This 20 minutes corresponds to a DF by decay of 1.E+6.

Table 4.5. Estimated concentrations of or purity specifications for chemical elements in HTGR graphite, thorium, and uranium

Element	Impurity or specification concentration (ppm) in		
	Graphite	Thorium	Uranium
H-1	(0.08 cc)[a]		
Li-3	0.05	2	2
Be-4		1	1
B-5	(59.5)[b]	0.5	0.5
N-7	(0.06 cc)[a]		
O-8			
F-9			
Na-11	0.3	40	40
Mg-12	<1	75	75
Al-13	17	50	50
Si-14	100	100	100
P-15		50	50
S-16	200	50	50
Cl-17	3		
K-18		20	20
Ca-20	320	50	50
Sc-21			
Ti-22	45	50	50
V-23	42	50	50
Cr-24		100	100
Mn-25	0.005	20	20
Fe-26	80	150	150
Co-27		5	5
Ni-28	10	100	100
Cu-29		50	50
Zn-30		50	50
Ga-31			
Ge-32			
As-33	0.1		
Se-34			
Br-35			
Rb-37			
Sr-38		20	20
Y-39			
Zr-40		50	50
Nb-41		50	50
Mo-42		50	50
Ru-44			
Rh-45			
Pd-46			
Ag-47		0.5	0.5
Cd-48	0.05	0.5	0.5
In-49	0.4	5	5
Sn-50		10	10

Table 4.5. (Continued)

Element	Impurity or specification concentration (ppm) in Graphite	Thorium	Uranium
Sb-51		10	10
Te-52			
I-53			
Cs-55		10	10
Ba-56		10	10
La-57		50	50
Ce-58		50	50
Pr-59			
Nd-60			
Sm-62	0.01		
Eu-63	0.0001		
Gd-64	0.02		
Tb-65			
Dy-66			
Ho-67			
Er-68			
Tm-69			
Yb-70			
Lu-71			
Hf-72		50	50
Ta-73		50	50
W-74		50	50
Re-75			
Os-76			
Ir-77			
Pt-78			
Au-79			
Hg-80			
Pb-82		5	5
Bi-83		2	2
Th-90			15
U-92			

[a]Standard cubic centimeters of gas per cubic centimeter of graphite. The hydrogen content is equivalent to 2.9 ppm (by weight) and the nitrogen to 30 ppm.

[b]This is due to 56.8 ppm burnable poison + an estimated 2.7 ppm boron impurity in the graphite. Other estimates of boron impurity are as low as 0.5 ppm.

Table 4.6. Activation products from potential impurities in graphite at the 1-ppm (by weight) concentration level[a]

Element and atomic number	Significant activation products			
			Activity/ppm impurity	
	Nuclide	Half-life[b]	(Ci/MTHM)[c]	(Ci/yr)[d]
H-1	None			
He-2	^{3}H-1	12.33 y	8.79E-2	3.96E+1
Li-3	^{3}H-1	12.33 y	3.29E+3	1.48E+6
Be-4	^{3}H-1	12.33 y	1.97E+1	8.87E+3
B-5	^{3}H-1	12.33 y	1.88E-1	8.46E+1
C-6	^{3}H-1 ^{14}C-6	12.33 y 5730 y	(1.64E+1) (3.69E+0)	(7.38E+3) (1.66E+3)
N-7	^{14}C-6	5730 y	4.19E-1	1.89E+2
O-8	^{14}C-6	5730 y	(2.24E-1)	(1.01E+2)
F-9	None			
Ne-10	None			
Na-11	None			
Mg-12	None			
Al-13	None			
Si-14	None			(None)
P-15	None			
S-16	^{33}P-15 ^{35}S-16	25.3 d 87.2 d	1.91E+0 7.95E-1	8.60E+2 3.58E+2
Cl-17	^{35}S-16	87.2 d	2.66E+1	1.20E+4
Ar-18	^{37}Ar-18	34.8 d	1.76E-1	7.92E+1
K-19	^{39}Ar-18	269 y	4.81E-2	2.16E+1
Ca-20	^{37}Ar-18 ^{45}Ca-20	34.8 d 163 d	9.95E-2 2.55E+0	4.48E+1 1.15E+3
Sc-21	^{46}Sc-21	83.8 d	8.68E+2	3.91E+5
Ti-22	None			
V-23	None			
Cr-24	^{51}Cr-24	27.71 d	2.30E+0	1.04E+3
Mn-25	None			
Fe-26	^{54}Mn-25 ^{55}Fe-26	312.5 d 2.7 y	4.49E-1 1.11E+1	2.02E+2 5.00E+3
Co-27	^{60}Co-27	5.272 y	2.20E+3	9.90E+5
Ni-28	^{58}Co-27 ^{60}Co-27 ^{63}Ni-28	71.3 d 5.272 y 100 y	1.13E+0 3.10E-1 1.80E+0	5.09E+2 1.40E+2 8.10E+2

Table 4.6. (continued)

Element and atomic number	Significant activation products			
			Activity/ppm impurity	
	Nuclide	Half-life[b]	(Ci/MTHM)[c]	(Ci/yr)[d]
Cu-29	^{65}Zn-30	243.7 d	5.07E-1	2.28E+2
Zn-30	^{65}Zn-30	243.7 d	4.35E+1	1.96E+4
Ga-31	None			
Ge-32	None			
As-33	None			
Se-34	^{75}Se-34	120 d	3.43E+1	1.54E+4
Br-35	None			
Kr-36	^{85}Kr-36	10.73 y	4.38E+0	1.97E+3
Rb-37	^{86}Rb-37	1.018 m	4.73E-1	2.13E+2
Sr-38	^{85}Sr-38	65.2 d	3.19E-1	1.44E+2
	^{89}Sr-38	50.5 d	1.90E-1	8.55E+1
Y-39	None			
Zr-40	^{95}Zr-40	65.5 d	4.12E-1	1.85E+2
	^{95}Nb-41	35.1 d	7.81E-1	3.51E+2
Nb-41	^{95}Nb-41	35.1 d	2.52E-1	1.13E+2
Mo-42	None			
Tc-43	(Does not occur naturally)			
Ru-44	^{103}Ru-44	39.6 d	4.15E+0	1.87E+3
Rh-45	None			
Pd-46	^{110}Ag*-47	252 d	3.52E+1	1.58E+4
Ag-47	^{108}Ag-47	2.41 m	2.97E-1	1.34E+2
	^{108}Ag*-47	130 y	2.97E+0	1.34E+3
	^{109}Ag*-47	39.6 s	2.36E+0	1.06E+3
	^{110}Ag-47	24.6 s	1.59E+0	7.16E+2
	^{110}Ag*-47	252 d	1.22E+2	5.49E+4
	^{109}Cd-48	453 d	2.36E+0	1.06E+3
Cd-48	^{109}Ag*-47	39.6 s	2.06E-1	9.27E+1
	^{109}Cd-48	453 d	2.06E-1	9.27E+1
	^{115}Cd*-48	44.6 d	1.46E+0	6.57E+2
In-49	^{114}In-49	71.9 s	1.34E+1	6.03E+3
	^{114}In*-49	44 ms	1.39E+1	6.26E+3
Sn-50	^{113}In*-49	1.658 h	1.47E+0	6.62E+2
	^{114}In-49	71.9 s	1.11E-1	5.00E+1
	^{114}In*-49	44 ms	1.16E-1	5.22E+1
	^{113}Sn-50	115 d	1.47E+0	6.62E+2
	^{119}Sn*-50	245 d	1.90E+1	8.55E+3
	^{123}Sn-50	129 d	4.75E-1	2.14E+2
	^{125}Sb-51	2.73 y	3.89E+0	1.75E+3
	^{125}Te*-52	58 d	8.18E-1	3.68E+2

Table 4.6. (continued)

Element and atomic number	Significant activation products			
			Activity/ppm impurity	
	Nuclide	Half-life[b]	(Ci/MTHM)[c]	(Ci/yr)[d]
Sb-51	^{124}Sb-51	60.2 d	1.67E+2	7.52E+4
	^{125}Sb-51	2.73 y	1.01E+0	4.55E+2
	^{123}Te*-52	119.7 d	2.81E+1	1.26E+4
	^{125}Te*-52	58 d	2.48E-1	1.12E+2
Te-52	^{123}Te*-52	119.7 d	5.46E+0	2.46E+3
	^{127}Te-52	9.4 h	2.17E+0	9.77E+2
	^{127}Te*-52	109 d	2.18E+0	9.81E+2
I-53	None			
Xe-54	^{134}Cs-55	2.06 y	1.94E+0	8.73E+2
Cs-55	^{134}Cs-55	2.06 y	2.51E+3	1.13E+6
Ba-56	^{133}Ba-56	10.4 y	1.33E-1	5.99E+1
La-57	None			
Ce-58	^{141}Ce-58	32.53 d	1.37E+0	6.17E+2
Pr-59	^{141}Ce-58	32.53 d	6.19E+0	2.79E+3
Nd-60	^{147}Pm-61	2.6234 y	4.41E+0	1.98E+3
	^{148}Pm*-61	41.3 d	1.04E-1	4.68E+1
	^{154}Eu-63	8.6 y	8.15E-1	3.67E+2
	^{155}Eu-63	4.8 y	4.28E-1	1.93E+2
Pm-61	(Does not occur naturally)			
Sm-62	^{145}Sm-62	340 d	6.68E-1	3.01E+2
	^{151}Sm-62	~93 y	3.30E-1	1.49E+2
	^{154}Eu-63	8.6 y	9.73E+1	4.38E+4
	^{155}Eu-63	4.8 y	6.17E+1	2.78E+4
	^{156}Eu-63	15.2 d	2.14E+0	9.63E+2
	^{153}Gd-64	241.5 d	1.00E-1	4.50E+1
	^{160}Tb-65	72.3 d	3.05E-1	1.37E+2
Eu-63	^{154}Eu-63	8.6 y	1.16E+2	5.22E+4
	^{155}Eu-63	4.8 y	7.62E+1	3.43E+4
	^{156}Eu-63	15.2 d	2.74E+0	1.23E+3
	^{153}Gd-64	241.5 d	1.46E+2	6.57E+4
	^{160}Tb-65	72.3 d	1.38E+0	6.21E+2
Gd-64	^{160}Tb-65	72.3 d	3.17E+1	1.43E+4
Tb-65	^{160}Tb-65	72.3 d	6.77E+2	3.05E+5
Dy-66	^{160}Tb-65	72.3 d	1.97E-1	8.87E+1
	^{159}Dy-66	144 d	1.22E+0	5.49E+2
	^{166}Ho*-67	21 ms	3.07E-1	1.38E+2
	^{170}Tm-69	129 d	2.02E+0	9.09E+2
	^{171}Tm-69	1.92 y	1.23E-1	5.54E+1
Ho-67	^{166}Ho-67	1200 y	2.20E-1	9.90E+1
	^{170}Tm-69	129 d	5.58E+0	2.51E+3
	^{171}Tm-69	1.92 y	3.85E-1	1.73E+2
Er-68	^{163}Ho-67	~33 y	4.49E-1	2.02E+2
	^{170}Tm-69	129 d	9.38E+1	4.22E+4
	^{171}Tm-69	1.92 y	5.36E+1	2.41E+4

Table 4.6. (continued)

Element and atomic number	Significant activation products			
			Activity/ppm impurity	
	Nuclide	Half-life[b]	(Ci/MTHM)[c]	(Ci/yr)[d]
Tm-69	^{170}Tm-69	129 d	1.12E+3	5.04E+5
	^{171}Tm-69	1.92 y	4.68E+2	2.11E+5
Yb-70	^{170}Tm-69	129 d	1.64E+0	7.38E+2
	^{171}Tm-69	1.92 y	6.53E-1	2.94E+2
	^{177}Lu*-71	161.0 d	3.06E-1	1.38E+2
	^{181}Hf-72	42.4 d	1.38E-1	6.21E+1
Lu-71	^{177}Lu-71	0.15 ms	5.72E-1	2.57E+2
	^{177}Lu*-71	161.0 d	2.49E+0	1.12E+3
	^{181}Hf-72	42.4 d	4.92E+0	2.21E+3
	^{182}Ta-73	115 d	6.58E-1	2.96E+2
Hf-72	^{175}Hf-72	70 d	1.02E+0	4.59E+2
	^{181}Hf-72	42.4 d	4.97E+1	2.24E+4
	^{182}Ta-73	115 d	1.73E+1	7.79E+3
Ta-73	^{182}Ta-73	115 d	2.11E+2	9.50E+4
	^{186}W-74	75 d	6.23E+0	2.80E+3
W-74	^{181}W-74	121.5 d	1.32E+0	5.94E+2
	^{186}W-74	75 d	2.25E+1	1.01E+4
	^{188}W-74	69 d	1.08E+0	4.86E+2
	^{188}Re-75	17 h	1.09E+0	4.91E+2
Re-75	^{188}W-74	69 d	1.04E-1	4.68E+1
	^{188}Re-75	17 h	1.05E-1	4.73E+1
	^{192}Ir-77	74.3 d	7.57E-1	3.41E+2
Os-76	^{191}Os-76	15.3 d	2.11E-1	9.50E+1
	^{194}Os-76	6.0 y	1.75E-1	7.88E+1
	^{192}Ir-77	74.3 d	4.79E+1	2.16E+4
	^{194}Ir-77	19.38 h	1.75E-1	7.88E+1
Ir-77	^{192}Ir-77	74.3 d	1.52E+0	6.84E+2
	^{193}Pt-78	~50 y	1.49E+0	6.71E+2
Pt-78	None			
Au-79	None			
Hg-80	^{203}Hg-80	46.60 d	8.61E+0	3.87E+3
	^{204}Tl-81	3.78 y	1.47E+0	6.62E+2
Tl-81	^{204}Tl-81	3.78 y	8.85E+1	3.98E+4
Pb-82	None			
Bi-83	^{210}Po-84	138.38 d	8.95E-1	4.03E+2

Table 4.6. (continued)

Element and atomic number	Significant activation products			
			Activity/ppm impurity	
	Nuclide	Half-life[b]	(Ci/MTHM)[c]	(Ci/yr)[d]
Th-90 (All ^{232}Th)	^{85}Kr-36	10.73 y	4.24E-1	1.91E+2
	^{89}Sr-38	50.5 d	3.49E+0	1.57E+3
	^{90}Sr-38	29 y	1.58E+0	7.11E+2
	^{90}Y-39	64 h	1.58E+0	7.11E+2
	^{91}Y-39	58.6 d	4.33E+0	1.95E+3
	^{95}Zr-40	65.5 d	5.54E+0	2.49E+3
	^{95}Nb*-41	61 d	1.18E-1	5.31E+1
	^{95}Nb-41	35.1 d	1.05E+1	4.73E+3
	^{103}Ru-44	39.6 d	5.84E-1	2.63E+2
	^{106}Ru-44	369 d	6.72E-1	3.02E+2
	^{125}Sb-51	2.73 y	1.64E-1	7.38E+1
	^{127}Te*-52	109 d	2.31E-1	1.04E+2
	^{127}Te-52	9.4 h	2.29E-1	1.03E+2
	^{134}Cs-55	2.06 y	2.92E+0	1.31E+3
	^{137}Cs-55	30.1 y	1.67E+0	7.52E+2
	^{137}Ba*-56	2.55 m	1.56E+0	7.02E+2
	^{141}Ce-58	32.53 d	1.18E+0	5.31E+2
	^{144}Ce-58	284.4 d	1.29E+1	5.81E+3
	^{144}Pr-59	17.28 m	1.29E+1	5.81E+3
	^{147}Pm-61	2.6234 y	1.36E+0	6.12E+2
	^{233}Pa-91	27.0 d	9.68E+0	4.36E+3
U-92 (Natural)	^{85}Kr-36	10.73 y	2.71E-1	1.22E+2
	^{89}Sr-38	50.5 d	2.11E+0	9.50E+2
	^{90}Sr-38	29 y	1.43E+0	6.44E+2
	^{90}Y-39	64 h	1.43E+0	6.44E+2
	^{91}Y-39	58.6 d	3.87E+0	1.74E+3
	^{95}Zr-40	65.5 d	9.25E+0	4.16E+3
	^{95}Nb*-41	61 d	1.96E-1	8.82E+1
	^{95}Nb-41	35.1 d	1.75E+1	7.88E+3
	^{103}Ru-44	39.6 d	3.57E+0	1.61E+3
	^{106}Ru-44	369 d	2.93E+1	1.32E+4
	^{103}Rh*-45	56 m	3.57E+0	1.61E+3
	^{110}Ag*-47	252 d	2.85E-1	1.28E+2
	^{123}Sn-50	129 d	2.07E-1	9.32E+1
	^{125}Sb-51	2.73 y	5.99E-1	2.70E+2
	^{125}Te*-52	58 d	2.43E-1	1.09E+2
	^{127}Te*-52	109 d	3.28E-1	1.48E+2
	^{127}Te-52	9.4 h	3.24E-1	1.46E+2
	^{129}Te*-52	33.4 d	1.06E-1	4.77E+1
	^{134}Cs-55	2.06 y	1.07E+1	4.82E+3
	^{137}Cs-55	30.1 y	4.78E+0	2.15E+3
	^{137}Ba*-56	2.55 m	4.47E+0	2.01E+3
	^{141}Ce-58	32.53 d	1.89E+0	8.51E+2
	^{144}Ce-58	284.4 d	2.53E+1	1.14E+4
	^{144}Pr-59	17.28 m	2.53E+1	1.14E+4
	^{147}Pm-61	2.6234 y	3.28E+0	1.48E+3
	^{154}Eu-63	8.6 y	3.78E-1	1.70E+2
	^{155}Eu-63	4.8 y	3.47E-1	1.56E+2
	^{241}Pu-94	15 y	7.52E+0	3.38E+3
	^{242}Cm-96	163 d	2.49E+0	1.12E+3
	^{244}Cm-96	17.9 y	2.60E+0	1.17E+3

[a]Other bases are as follows: (1) these values apply to the fluxes in the reference 1000-MWe HTGR; (2) radioactivity is calculated 160 days after discharge from the reactor; (3) there are 10.93 MT carbon/MTHM charged to the reactor; (4) except for the production of ^{3}H-1 from He-2 and of ^{37}Ar-18 and ^{39}Ar-18, values of less than 1.0E-1 Ci/MTHM have been neglected.

Table 4.6. (continued)

---

[b]Some nuclides with short half-lives (hours or less) are listed because they are decay products of longer-lived nuclides in the activation products.

[c]MTHM is the metric tons of heavy metal charged to the reactor.

[d]Instead of a reference of 1 ppm impurity in graphite, the following definitions apply to numbers in parentheses: (1) to 10.93 MT carbon/MTHM; (2) all thorium in the reactor exists as ThO_2, corresponding to 0.1254 MT oxygen/MTHM, or 7840 g-atoms/MTHM; (3) all uranium exists as particles coated with graphite plus silicon, whose content is 0.04713 MT silicon/MTHM, or 1678 g-atoms/MTHM. All quantities in this column refer to 450 MTHM as charged to the reactor.

Table 4.7. Heavy-metal charge compositions used in ORIGEN calculations[a] for the reference 1000-MW(e) HTGR

	Stream compositions (g-atoms/MTHM)				
	Thorium stream	23R stream	IM stream	25R stream	Blended stream
	30-Year Lifetime Average Values				
Th-230	0.435	0.	0.	0.	0.395
Th-232	4309.91	0.	0.	0.	3919.46
U-232	0.	3.233	0.	0.	0.107
U-233	0.	2839.82	0.	0.	93.751
U-234	0.	928.03	40.406	59.051	33.189
U-235	0.	324.86	3961.08	1806.23	212.72
U-236	0.	186.74	8.891	1789.54	28.232
U-238	0.	0.	241.99	585.66	18.094
	20th Charge				
Th-230	0.435	0.	0.	0.	0.391
Th-232	4309.91	0.	0.	0.	3876.02
U-232	0.	4.052	0.	0.	0.176
U-233	0.	2652.34	0.	0.	114.890
U-234	0.	1010.07	39.445	59.150	46.271
U-235	0.	380.74	3872.76	1688.97	210.31
U-236	0.	234.06	8.744	1893.35	35.079
U-238	0.	0.	330.29	598.41	22.421

[a]These are CITATION values modified to include 100 ppm Th-230 in the thorium stream and, in the 23R stream, 750 ppm U-232 for the lifetime average or 940 ppm for the 20th charge. The CITATION calculations assume that the 23R and 25R streams are recharged 1 yr after discharge.

Table 4.8. Calculated steady-state ^{232}U content of the 23R stream charge for various quantities of ^{230}Th in the thorium[a]

Source of ^{232}U	^{230}Th	^{232}Th	^{232}U	^{233}U
Yield of ^{232}U from source, after irradiation in HTGR				
After 1 year decay, g/g source	2.38E-1	1.15E-5	2.20E-1	2.77E-6
After 2 years decay, g/g source	2.36E-1	1.14E-5	2.18E-1	2.74E-6
Symbol for yield	x_{00}	x_{02}	x_{22}	x_{23}
Mass of source nuclide used in 20th charge from CITATION calculation, g	0	7264580	0	216260
Symbol for mass	W_{00}	W_{02}	W_{22}	W_{23}
Calculated ^{232}U content in 23R stream (of Mass 349.61 kg - Table 4.3)				
1) For 1-year recycle time	0 ppm		108 g 309 ppm	
	10 ppm		130 g 370 ppm	
	50 ppm		218 g 625 ppm	
	100 ppm		329 g 940 ppm	
2) For 2-year recycle time	0 ppm		107 g 306 ppm	
	10 ppm		129 g 370 ppm	
	50 ppm		216 g 620 ppm	
	100 ppm		326 g 930 ppm	

[a]Calculated as $W_{22} = (W_{00}x_{00} + W_{02}x_{02} + W_{23}x_{23})/(1 - x_{22})$, where W_{00} is obtained by multiplying assumed ppm ^{230}Th by 1.E-6 and then by W_{02}.

Table 4.9. Mass flow rates through the reference 450-MTHM/year HTGR fuel reprocessing plant

Element	Mass flow rate (kg/yr)			
	From fuel		From impurities	
	Reactor lifetime average	Reactor 20th loading	In graphite	In fuel
H	6.0E-2	6.3E-2		
He				
Li			3.4E+0	9.0E-1
Be				4.5E-1
B			3.0E+2	
C			4.9E+6	
N			1.5E+2	
O			1.3E+7[a]	
Na			1.5E+0	1.8E+1
Mg			<5. E+0	3.4E+0
Al			8.4E+1	2.2E+1
Si			1.0E+2	4.5E+1[b]
P				2.2E+1
S			9.8E+2	2.2E+1
Cl			1.5E+1	
K				9. E+0
Ca			1.6E+3	
Ti			2.2E+2	1.0E+1
V			2.1E+2	1.0E+1
Cr				4.5E+1
Mn				9. E+1
Fe			3.9E+2	6.8E+1
Co				2. E+1
Ni			5.0E+1	5. E+0
Cu				1.0E+1
Zn				1.0E+1
Ge	7.3E-1	7.7E-1		
As	2.8E-1	2.9E-1		
Se	1.2E+2	1.3E+2		
Br	4.3E+1	4.6E+1		
Kr	8.9E+2	9.4E+2		
Rb	8.4E+2	8.8E+2		
Sr	1.7E+3	1.8E+3		9. E+0
Y	9.0E+2	9.4E+2		
Zr	5.6E+3	5.9E+3		2.2E+1
Nb	1.3E+1	1.3E+1		
Mo	4.1E+3	4.3E+3		
Tc	8.9E+2	9.4E+2		
Ru	1.7E+3	1.8E+3		
Rh	1.9E+2	2.0E+2		
Pd	5.5E+2	5.8E+2		
Ag	6.1E+0	6.6E+0		2. E-1

Table 4.9. (continued)

Element	Mass flow rate (kg/yr)			
	From fuel		From impurities	
	Reactor lifetime average	Reactor 20th loading	In graphite	In fuel
Cd	2.8E+1	3.0E+1		
In	6.5E-1	6.7E-1	2. E+0	2.2E+0
Sn	5.0E+1	5.3E+1		5. E+0
Sb	1.9E+1	2.0E+1		5. E+0
Te	8.0E+2	8.4E+2		
I	4.2E+2	4.5E+2		
Xe	6.7E+3	7.1E+3		
Cs	3.2E+3	3.4E+3		5. E+0
Ba	1.9E+3	2.0E+3		5. E+0
La	1.7E+3	1.7E+3		2.2E+1
Ce	4.1E+3	4.3E+3		2.2E+1
Pr	1.7E+3	1.8E+3		
Nd	5.2E+3	5.5E+3		
Pm	8.2E+1	8.5E+1		
Sm	8.0E+2	8.3E+2		
Eu	1.5E+2	1.6E+2		
Gd	2.4E+2	2.5E+2		
Tb	3.4E-1	3.7E-1		
Dy	2.0E-1	2.2E-1		
Hf				2.2E+1
Ta				2.2E+1
W				2.2E+1
Pb	1.9E-1	2.7E-1		2.2E+0
Bi	1.0E-1	1.3E-1		1. E+0
Ra	2.2E-3	2.5E-3		
Ac	1.3E-3	1.3E-3		
Th	3.8E+5	3.8E+5		
Pa	3.9E+1	3.8E+1		
U	2.5E+4	2.7E+4		
Np	9.4E+2	1.0E+3		
Pu	7.1E+2	8.1E+2		
Am	1.8E+1	2.1E+1		
Cm	9.2E+0	1.1E+1		
Total R.E.	1.2E+4	1.3E+4		
Total F.P.	4.5E+4	4.7E+4		
Total	4.5E+5	4.5E+5	3.9E+3[c] 5.0E+3[d]	5.9E+2[c]

[a]As CO_2.

[b]Does not include 0.04713 MT Si as SiC coating/MTHM.

[c]As elements and excluding H, C, O, and noble gases.

[d]As metal oxides and excluding H, C, N, O, P, S, Cl, and noble gases.

Table 4.10. Summary of variables for model HTGR fuel reprocessing plant[a] gas and liquid radwaste treatment systems

	Radwaste treatment case number									
		Iodine control				Particulate control	Tritium control	Noble gas control	^{14}C control	Composite Case
	1[b]	2a[c]	2b[d]	2c[e]	2d[f]	3[g]	4[h]	5[i]	6[j]	7[k]
Treatment Objective	Base case	Reduce iodine[c] content of vapor from aqueous-waste evaporator	Reduce iodine release by evolving I_2 from feed solution. Recycle mercury	Reduce iodine release by use of Iodox process; evolve I_2 from feed solution	Reduce iodine release by use of CdZeO; evolve I_2 from feed solution	Reduce particulate and semivolatile releases by 10	Reduce tritium release by 10^2	Reduce airborne activity by 10^2 except ^{14}C DF is unchanged and ^{220}Rn DF increases to 10^{12}	Same as Case 5 except convert CO_2 to $CaCO_3$	Composite of Cases 1, 2c, 3, and 6
	Overall Plant Decontamination Factor[n]									
Tritium	1E+0	1E+0	1E+0	1E+0	1E+0	1E+0	1E+2	3E+0	3E+0	1E+2
Carbon-14	1E+0	1E+0	1E+0	1E+0	1E+0	1E+0	1E+0	1E+0	1E+2	1E+2
Argon-37	1E+0	1E+0	1E+0	1E+0	1E+0	1E+0	1E+0	1E+2	1E+2	1E+2
Krypton-85	1E+0	1E+0	1E+0	1E+0	1E+0	1E+0	1E+0	1E+2	1E+2	1E+2
Iodine-129	2E+1	5E+2	1E+4	1E+4	8E+3	2E+1	2E+1	2E+1	2E+1	1E+4
Iodine-131	6E+1	3E+3	1E+4	1E+4	1E+4	6E+1	6E+1	6E+1	6E+1	1E+4
Radon-220	1E+6	1E+6	1E+6	1E+6	1E+6	1E+6	1E+6	1E+12	1E+12	1E+12
Radon-222	1E+0	1E+0	1E+0	1E+0	1E+0	1E+0	1E+0	1E+2	1E+2	1E+2
Semivolatiles	1E+8	1E+8	1E+8	1E+8	1E+8	1E+9	1E+8	1E+10	1E+10	1E+11
Thorium	5E+7	5E+7	5E+7	5E+7	5E+7	5E+8	5E+7	5E+9	5E+9	5E+10
Uranium	5E+7	5E+7	5E+7	5E+7	5E+7	5E+8	5E+7	5E+9	5E+9	5E+10
Other Particulates	5E+8	5E+8	5E+8	5E+8	5E+8	5E+9	5E+8	5E+10	5E+10	5E+11
	Equipment Unit or Function and Flowsheet Reference									
Tritium	None[a]	Same as Case 1	Same as Case 1	Same as Case 1	Same as Case 1	Same as Case 1	Bakeout, molecular sieve	KALC process	KALC process	Same as Case 4
Carbon	None	Same as Case 1	Same as Case 1	Same as Case 1	Same as Case 1	Same as Case 1	Same as Case 1	Same as Case 1	Same as Case 5 except that CO_2 from burning is converted to $CaCO_3$	Same as Case 6
Argon	None	Same as Case 1	Same as Case 1	Same as Case 1	Same as Case 1	Same as Case 1	Same as Case 1	KALC process	Same as Case 5	Same as Case 5
Krypton	None	Same as Case 1	Same as Case 1	Same as Case 1	Same as Case 1	Same as Case 1	Same as Case 1	KALC process	Same as Case 5	Same as Case 5
Radon	20-min holdup	Same as Case 1	Same as Case 1	Same as Case 1	Same as Case 1	Same as Case 1	Same as Case 1	KALC process provides at least 20-min holdup and radon is bottled	Same as Case 5	Same as Case 5
Iodine										
Gaseous	1 - $Hg(NO_3)_2$-HNO_3 scrubber, AgZeO adsorber, HEPA filters	Same as Case 1	Same as Case 1 except add 2nd $Hg(NO_3)_2$-HNO_3 scrubber	Same as Case 1 except replace $Hg(NO_3)_2$-HNO_3 scrubber by Iodox process	Same as Case 1 except replace $Hg(NO_3)_2$-HNO_3 scrubber by CdZeO	Same as Case 1	Same as Case 1	KALC process	Same as Case 5	Same as Case 2c
Liquid	Iodine removal partial evaporator	Ion exchange downstream from evaporator	Same as Case 2a plus evolving iodine from feed solution	Same as Case 2b	Same as Case 2b	Same as Case 1	Same as Case 1	Same as Case 1	Same as Case 1	Same as Case 2c
Solid	None	Same as Case 1	Recover and store I_2 as $NaIO_3$	Recover and store I_2 as HI_3O_8	Recover and store I_2 as CdZeO	Same as Case 1	Same as Case 1	Same as Case 1	Same as Case 1	Same as Case 2c
Semi-Volatiles	HEPA filters	Same as Case 1	Same as Case 1	Same as Case 1	Same as Case 1	Same as Case 1 plus sand filter	Same as Case 1	KALC process	KALC process	Same as Case 3 plus KALC process
Particulates	HEPA filters	Same as Case 1	Same as Case 1	Same as Case 1	Same as Case 1	Same as Case 1 plus sand filter	Same as Case 1	KALC process	KALC process	Same as Case 3 plus KALC process
Cell Ventilation	HEPA filter	Same as Case 1	Same as Case 1	Same as Case 1	Same as Case 1	Same as Case 1 plus sand filter	Same as Case 1	Same as Case 1	Same as Case 1	Same as Case 3
Lab Ventilation	HEPA filter	Same as Case 1	Same as Case 1	Same as Case 1	Same as Case 1	Same as Case 1 plus sand filter	Same as Case 1	Same as Case 1	Same as Case 1	Same as Case 3

[a]Model HTGR fuel reprocessing plant has a nominal capacity of 450 MT(U+Th)/year; reference fuel is defined in Table 4.2 and the burnup in Table 4.4; the decay time is 160 days. No credit is taken for decay during processing except for Rn-220. All gaseous and water-vapor releases are discharged from a 100-meter stack.

[b]Figure 4.5. [c]Figure 4.6. [d]Figure 4.7. [e]Figure 4.8. [f]Figure 4.9. [g]Figure 4.10. [h]Figure 4.11. [i]Figure 4.12.

[j]Figure 4.13 [k]Figure 4.14. [n]Decontamination factor (DF) is amount entering plant/amount released in waste effluents.

Table 4.11. Analysis of iodine-removal cases[a]

		Case 1	Case 2a	Case 2b	Case 2c	Case 2d
Gas-phase equipment (number of units)	$Hg(NO_3)_2$-HNO_3 scrubber	1	1	2		
	Iodox				1	
	CdZeO					1
	AgZeO	1	1	1	1	1
Liquid-phase equipment (number of units)	MLW evaporator	1	1	1	1	1
	Iodine removal partial evaporator	1	1	1	1	1
	Iodine removal ion exchange		1	1	1	1
Iodine evolution		No	No	Yes	Yes	Yes
Iodine partition in burners, G, gaseous/within fuel		0.4/0.6	0.4/0.6	0.4/0.6	0.4/0.6	0.4/0.6
Iodine partition at dissolver, (f_v/f_e) vapor/liquid		0.9/0.1	0.9/0.1	0.995/0.005	0.995/0.005	0.995/0.005
Ultimate fraction of I_2 reporting to conc. MLW tank		1.0	1.0	0.005	0.005	0.005
DF(1,1,e),[a] miscellaneous liquid waste evaporator		1.0 E+2	1.0 E+2	1.0 E+2	1.0 E+2	1.0 E+2
DF(2,1,e),[a] iodine removal partial evaporator		4.	4.	4.	4.	4.
DF(3,1,e),[a] iodine removal ion exchange		1.[b]	5.0 E+1	5.0 E+1	5.0 E+1	5.0 E+1
DF(1,v,e), primary iodine sorber in off-gas		1.0 E+2	1.0 E+2	1.0 E+3	1.0 E+3	1.0 E+2
DF(1,v,t), factor for decay of ^{131}I in primary sorber		2.	2.	2.	2.	2.
DF(2,v,e), AgZeO		1.0 E+2	1.0 E+2	1.0 E+2	1.0 E+2	1.0 E+2
DF(2,v,t), factor for decay of ^{131}I in AgZeO		1.0 E+3	1.0 E+3	1.0 E+3	1.0 E+3	1.0 E+3
N_1(Av), lifetime average inventory of ^{129}I in CMLW tank, days		4.5 E+3	4.5 E+3	2.25E+1	2.25E+1	2.25E+1
N_1(Mx), maximum inventory of ^{129}I in CMLW tank, days		9.0 E+3	9.0 E+3	4.5 E+1	4.5 E+1	4.5 E+1
N_2, steady-state inventory of ^{131}I in CMLW tank, days		1.16E+1	1.16E+1	5.8 E-2	5.8 E-2	5.8 E-2
Recycle fraction		2.16E-3	2.16E-3	2.16E-3	2.16E-3	2.16E-3
Lifetime ave. fraction ^{129}I discharged in off-gas		1.07E-3	1.07E-3	1.05E-5	1.05E-5	1.05E-4
Maximum fraction ^{129}I discharged in off-gas (end of 30 yrs)		2.04E-3	2.04E-3	1.09E-5	1.09E-5	1.09E-4
Steady-state fraction ^{131}I discharged in off-gas		4.83E-8	4.83E-8	4.99E-9	4.99E-9	4.99E-8
Lifetime ave. fraction ^{129}I discharged in vaporized liquid		4.17E-2	8.34E-4	1.51E-5	1.51E-5	1.51E-5
Maximum fraction ^{129}I discharged in vaporized liquid (end of 30 yrs)		6.59E-2	1.32E-3	1.51E-5	1.51E-5	1.51E-5
Steady-state fraction ^{131}I discharged in vaporized liquid		1.63E-2	3.26E-4	1.51E-5	1.51E-5	1.51E-5
Lifetime average ^{129}I DF in off-gas		9.38E+2	9.38E+2	9.56E+4	9.56E+4	9.56E+3
Minimum ^{129}I DF in off-gas (end of 30 yrs)		4.91E+2	4.91E+2	9.14E+4	9.14E+4	9.14E+3
Steady-state ^{131}I DF in off-gas		2.07E+7	2.07E+7	2.01E+8	2.01E+8	2.01E+7
Lifetime average ^{129}I DF in vaporized liquid		2.40E+1	1.20E+3	6.62E+4	6.62E+4	6.62E+4
Minimum ^{129}I DF in vaporized liquid (end of 30 yrs)		1.52E+1	7.58E+2	6.62E+4	6.62E+4	6.62E+4
Steady-state ^{131}I DF in vaporized liquid		6.13E+1	3.06E+3	6.62E+4	6.62E+4	6.62E+4
Lifetime average plant DF for ^{129}I		2.34E+1	5.26E+2	3.91E+4	3.91E+4	8.36E+3
Minimum plant DF for ^{129}I		1.47E+1	2.98E+2	3.84E+4	3.84E+4	8.03E+3
Steady-state plant DF for ^{131}I		6.13E+1	3.06E+3	6.61E+4	6.61E+4	6.59E+4

[a]See Sect. 4.5.1 for definitions and equations; see Fig. 4.15 for further details of iodine recycle. All variables not otherwise specified in this table have values of 1.0. These include DF(1,1,t) = DF(2,1,t) = DF(3,1,t) = 1.0 since no credit is taken for decay of ^{131}I in the liquid-phase treatment equipment. DF(i,1,t) and DF(i,v,t) are 1.0 for ^{129}I in all cases since the decay of ^{129}I is trivial even during the 30-yr life of the reprocessing plant.

[b]DF(3,1,e) = 1.0 in Case 1 since the iodine-removal ion exchange unit is not used in this case.

Table 4.12. Liquid and gaseous effluent operating experience at the NFS fuel processing plant

	1966	1967	1968	1969	1970	1971
Fuel Processed[a]						
Reactor exposure, MWd(th)	150,000	1,000,000	510,000	950,000	720,000	790,000
Gross beta, curies	10,000,000	67,000,000	34,000,000	64,000,000	48,000,000	53,000,000
^{85}Kr, curies	48,000	320,000	160,000	300,000	230,000	250,000
^{3}H, curies	2,600	18,000	9,000	17,000	13,000	14,000
^{129}I, curies	0.13	0.90	0.46	0.85	0.65	0.71
^{90}Sr, curies	410,000	2,700,000	1,400,000	2,600,000	2,000,000	2,200,000
Liquid Effluents[b]						
Gross alpha, curies	0.038	0.056	0.14	0.38	0.1	0.06
Gross beta, curies	8.3	31	46	140	87	77
^{3}H, curies	290	4,200	2,600	6,000	4,500	3,800
^{129}I, curies		0.07	0.028	0.22	0.34	0.21
^{90}Sr, curies		4.4	5.0	10.1	14.2	6.6
Percent of limit[c]	6	11	9	19	22	13
Gaseous Effluents[b]						
Annual release, curies						
Particulates	0.15	0.45	1.1	0.12	0.18	0.01
^{85}Kr	77,000	330,000	190,000	300,000	180,000	220,000
^{131}I	<0.06	<0.06	<0.06	<0.06	<0.06	<0.06
Percent of limits[d]						
Particulates	4.6	14	35	3.8	5.7	0.32
^{85}Kr	1.7	7.2	4.2	6.5	3.9	4.8
^{131}I	<1	<1	<1	<1	<1	<1

[a]Radionuclide content of fuel based upon reactor power data and properties of typical LWR fuel at a postirradiation decay time of 1 year. A measure of the consistency of the data may be obtained by comparing the computed ^{85}Kr processed with the ^{85}Kr that was measured in the gaseous effluent.

[b]Measured effluent data taken from Environmental Effects of Producing Electric Power, Part 2 (Vol. 1), pp. 1711-1716, and NFS Quarterly Reports.

[c]Percent of 10 CFR 20 concentration guides in Cattaraugus Creek.

[d]Percent of release limits imposed by AEC operating license.

Table 4.13. Observed and expected nuclide release fractions[a]

	H-3	Kr-85	I-129	I-131	Ru	Particulates			
						Th	U	Pu	Others
NFS - Overall Operational Average, 1966-1971 (Table 4.12)	0.73 (G)[c] 0.27 (L)	1.	- 0.21 (L)	- -	- -	- -	-	-	- 6.1E-9
MFRP - Environmental Report[79]	1.	1.	2.8E-3	2.8E-3	-	-	-	-	-
AEC Final Environmental Statement[43]	1.	1.	1. E-3	1. E-3	-	-	1. E-9	-	1. E-9
BNFP - Environmental Report[5]	1.	1.	7.7E-4	1.5E-4	-	-	-	2. E-9	2. E-9
AEC Final Environmental Statement[44]	1.	1.	1. E-3	1. E-3	-	-	-	1. E-9	1. E-9
NFS - Environmental Report[78]	1.	1.	1. E-3	1. E-3	-	-	-	-	-
Siting Report[77]	1.	1.	1. E-3	1. E-3	-	-	-	-	1.2E-8
Uranium Fuel Cycle Survey[80]	1.	1.	1.67E-3	3.33E-4	-	-	-	6.7E-10	6.7E-9
Cowser et al.[81]	1.	1.	1. E-2	1. E-3	(1. E-8 (2. E-9	- -	3. E-4[b] 3. E-4[b]	6. E-9 6. E-9	3. E-9)MFRP 2. E-9)BNFP
This Report	1.	1.	5. E-2	2.5E-2	1. E-8	2. E-8	2. E-8	2. E-9	2. E-9

[a] The nuclide release fraction = 1/DF.

[b] These values reflect discharges from a UNH → UF_6 plant and are not comparable with the other values for uranium.

[c] G = gaseous (L) = liquid.

Table 5.1. Solid radioactive waste

Waste type	Radioactivity level		Annual amounts (ft^3)
	Beta-gamma	Alpha	
Graphite reflector blocks[a]	High	Low	12,500
Alpha waste[b]	Low-medium	>10 μCi/kg	60,000
Alpha-beta-gamma wastes[c]	>10 mrem/hr at surface	>10 μCi/kg	150,000
Beta-gamma wastes[d]	Low	<10 μCi/kg	240,000

[a]Based on data used in ref. 6, there are discharged, on the average over an 8-year cycle, the equivalent of 162 reflector blocks of 31-in. size per thousand 31-in. fuel blocks discharged.

[b]As defined on pp. 66 and 67 of ref. 7. Based on 14.85 MT of 23R particles charged to the reactor of the total 450 MTHM and 4000 ft^3 of alpha waste per metric ton of 23R.

[c]As defined on p. 67 of ref. 7 and based on 10,000 ft^3 of alpha-beta-gamma waste/MT(23R).

[d]As defined on p. 67 of ref. 7 and based on 16,000 ft^3 of beta-gamma waste/MT(23R).

Table 5.2. Sewage discharged[a]

Total dissolved solids	560
Total suspended solids	40
Total volatile solids	20
Total solids	600
Five-day Biochemical Oxygen Demand (BOD)	15
Ultimate BOD	25
Alkalinity	350
Calcium	20
Dissolved oxygen	6.0
Hardness	30.0
Magnesium	5.0
Nitrogen-ammonia	7.5
Nitrogen-nitrate	10.5
Nitrogen-organic	18.0
Phosphorus-ortho	32
pH	8
Potassium	2
Sodium	10
Sulfate	10
Chemical Oxygen Demand (COD)	33
Total organic carbon	60
E. coli	2300 Most. Prob. Colonies
Fecal *E. coli*	2300 Most. Prob. Colonies
Fecal *Streptococcus*	230 Most. Prob. Colonies

[a]Data taken from ref. 2. Concentrations are in ppm except as noted.

Table 5.3. Estimated average nonradioactive gaseous effluents[a]

	H_2O (lb/hr)	NO_2 (mg/sec)	SO_2 (mg/sec)	CO (mg/sec)
Main	14,000	13,000	Nil	Nil
Service concentrator	4,560	Nil	Nil	Nil
Cold off-gas	Nil	580	Nil	Nil
Process boilers (gas)[b]	13,900	2,280	4.1	270
Process boilers (oil)[b]	9,800	6,270	3,290	270
Administration boiler (oil)	70	73.8	123	0.62
Furnaces (oil)	62	56.1	92	0.45

[a]From ref. 2 on the Barnwell LWR fuel reprocessing plant. The same values are assumed to apply to the HTGR fuel reprocessing plant.

[b]Normal fuel is natural gas.

Table 6.1. Estimated annual costs, reprocessing costs, and contributions to power costs for the 450-MTHM/year model fuel reprocessing plant and radwaste treatment cases

Radwaste treatment case	Capital cost[a] ($1000)	Annual fixed charge ($1000)	Annual operating cost[b] ($1000)	Total annual cost ($1000)	Reprocessing cost[c] [$/kg (U+Th)]	Contribution to power cost[d] (mills/kWhr)
			Total cost - base plant			
1[e]	400,000	104,000	41,600	145,600	324	0.404
			Additional cost for radwaste treatment systems[f]			
2a (iodine control)	92 (400,092)	24 (104,024)	11 (41,611)	35 (145,635)	0.08 (324.08)	0.000096 (0.404096)
2b (iodine control)	1,208 (401,208)	314 (104,314)	127 (41,727)	441 (146,041)	0.98 (324.98)	0.001225 (0.405225)
2c (iodine control)	1,290 (401,290)	335 (104,335)	135 (41,735)	470 (146,070)	1.04 (325.04)	0.001306 (0.405306)
2d (iodine control)	632 (400,632)	164 (104,164)	214 (41,814)	379 (145,979)	0.84 (324.84)	0.001051 (0.405051)
3 (particulate control)	1,059 (401,059)	275 (104,275)	28 (41,628)	303 (145,903)	0.67 (324.67)	0.000842 (0.404842)
4 (tritium control)	1,822 (401,822)	474 (104,474)	190 (41,790)	664 (146,264)	1.48 (325.48)	0.001845 (0.405845)
5 (noble gas control)	8,893 (408,893)	2,312 (106,312)	925 (42,525)	3,237 (148,837)	7.22 (331.22)	0.008954 (0.412954)
6 (^{14}C and noble gas control)	14,514 (414,248)	3,774 (107,774)	7,733 (49,333)	11,507 (157,107)	25.58 (349.58)	0.031562 (0.435562)
7 (composite)	18,685 (418,685)	4,859 (108,859)	8,086 (49,086)	12,945 (158,545)	28.77 (352.77)	0.03550 (0.43950)

[a]System and structure capital cost consists of direct and indirect costs. The interest during construction is included as an indirect cost.

[b]Annual operating costs are estimated at 40% of annual fixed charges, with the exception of the sand filter, in Cases 3 and 7, which is estimated at 10%. Also, the annual cost of replacing ($148,000) and drumming ($1120) the spent CdZeO in Case 2b and the annual cost of lime ($843,000) and drumming the wet $CaCO_3$ filter cake ($5,380,000) in Cases 6 and 7 are included as additional annual operating costs. The annual cost of incorporating the waste in cement, on-site storage or burial, or shipping off-site for burial is not included.

[c]The reprocessing cost equals the total annual cost divided by the 4.5×10^5 kg per year of uranium plus thorium charged to the reactor.

[d]The contribution to power cost is computed on the basis of a 450-metric ton/year reprocessing plant servicing a nuclear economy equivalent to fifty 1000-MW(e) HTGRs (average irradiation level, 95,000 MWd/metric ton; load factor, 80%; thermal efficiency, 38.5%). The costs include the direct charges but do not include the effect of carrying charges on fuel working capital.

[e]Case 1, the base case, represents a complete model nuclear fuel reprocessing plant which produces uranium nitrate, thorium nitrate, and plutonium nitrate. The thorium nitrate and plutonium nitrate and intermediate- and high-level liquid waste would be stored. The capital cost of the plant is $400,000,000. Radwaste treatment Cases 2a-7 are additions to the base case, and consequently the total capital cost for Cases 2a through 7 would be $400,000,000 plus the capital cost of the radwaste treatment case. The total capital cost for Case 7 is the cost of Case 1 plus the cost of Cases 2c, 3, 4, and 6 that are combined into a composite Case 7. The numbers in parentheses are total cost, i.e., base case plus added radwaste treatment cost.

[f]Totals are given in parentheses.

Table 6.2. Estimated incremental costs and amounts of radioactive materials released in the airborne effluent discharged from the 100-m stack for the radwaste treatment cases

	Radwaste Treatment Case									
		Iodine Control				Particulate Control	Tritium Control	Noble Gas Control	^{14}C and Noble Gas Control	Composite Best
	1	2a	2b	2c	2d	3	4	5	6	7
Capital cost,[a] $1000	(400,000)	92	1,208	1,290	632	1,059	1,822	8,893	14,514	18,685
Annual cost,[a] $1000	(145,600)	35	441	470	164	303	664	3,237	11,507	12,945
Calculated radioactive materials released,[b] Ci/year										
Tritium	1.6E+6	1.6E+6	1.6E+6	1.6E+6	1.6E+6	1.6E+6	1.6E+4	1.6E+4	1.6E+4	1.6E+4
Carbon-14	7.4E+3	7.4E+3	7.4E+3	7.4E+3	7.4E+3	7.4E+3	7.4E+3	7.4E+3	7.4E+1	7.4E+1
Argon-37	1.1E+4	1.1E+4	1.1E+4	1.1E+4	1.1E+4	1.1E+4	1.1E+4	1.1E+2	1.1E+2	1.1E+2
Krypton-85	2.7E+7	2.7E+7	2.7E+7	2.7E+7	2.7E+7	2.7E+7	2.7E+7	2.7E+5	2.7E+5	2.7E+5
Iodine-129	2.7	1.1E-1	7.7E-3	5.4E-3	7.7E-3	2.7	2.7	2.7	2.7	7.7E-3
Iodine-131	1.8E+1	1.0	8.9E-2	7.1E-2	8.9E-2	1.8E+1	1.8E+1	1.8E+1	1.8E+1	8.9E-2
Radon-220	8.0E+4	8.0E+4	8.0E+4	8.0E+4	8.0E+4	8.0E+4	8.0E+4	8.0E-2	8.0E-2	8.0E-2
Radon-222	5.8E+1	5.8E+1	5.8E+1	5.8E+1	5.8E+1	5.8E+1	5.8E+1	5.8E-1	5.8E-1	5.8E-1
Semivolatiles	8.4E-1	8.4E-1	8.4E-1	8.4E-1	8.4E-1	8.4E-2	8.4E-1	8.4E-3	8.4E-3	8.4E-4
Thorium	6.2E-3	6.2E-3	6.2E-3	6.2E-3	6.2E-3	6.2E-4	6.2E-3	6.2E-5	6.2E-5	6.2E-6
Uranium	9.8E-3	9.8E-3	9.8E-3	9.8E-3	9.8E-3	9.8E-4	9.8E-3	9.8E-5	9.8E-5	9.8E-6
Other particulates	7.8	7.8	7.8	7.8	7.8	7.8E-1	7.8	7.8E-2	7.8E-2	7.8E-3

[a]The cost for Cases 2a through 7 are in addition to the cost of the base Case 1; Cases 2b, 2c, and 2d include Case 2a.

[b]The nuclide(s) affected by each radwaste treatment case are underlined.

Table 6.3. Installed costs[a] of equipment for model fuel reprocessing plant radwaste treatment Cases 2a-7

Radwaste treatment case		Costs without structure ($1000)	
		Direct[b]	Capital[c]
2a	Iodine removal by ion exchange	10	25
2b	Mercury recycle, iodine evolution, DOG $Hg(NO_3)_2$-HNO_3 scrubbers, iodine removal by ion exchange	164	408
2c	Iodine evolution, replace Case 1 $Hg(NO_3)_2$-HNO_3 scrubber with Iodox, iodine removal by ion exchange	224	558
2d	Iodine evolution, replace Case 1 $Hg(NO_3)_2$-HNO_3 scrubber with CdZeO adsorbers, iodine removal by ion exchange	139	346
3	Sand filter	425[d]	1,059[d]
4	Tritium retention by adsorption on molecular sieves, tritium bake-out	261[e]	650[e]
5	KALC process	2,327[f]	5,794[f]
6	KALC process,	2,327[f]	5,794[f]
	conversion of CO_2 to $CaCO_3$	1,293[g]	3,220[g]
	Total	3,620	9,014
7	Iodine removal by ion exchange, iodine evolution, replace Case 1 $Hg(NO_3)_2$-HNO_3 scrubber with Iodox, molecular sieve, tritium bake-out, KALC process, conversion of CO_2 to $CaCO_3$	4,530	11,281

[a]Details of the cost estimates are presented in Appendix A.

[b]Cost for 1973. Direct cost includes purchase cost and complete installation cost.

[c]Capital costs are calculated by multiplying the direct cost by 2.49. Capital costs include direct costs and indirect costs.

[d]The sand filter is housed in external concrete shell.

[e]Includes the cost for a tritiated water load-out station but does not include the cost of a special shielded facility for long-term storage on-site.

[f]Includes the cost for a station for bottling the noble gases in pressurized cylinders. The costs do not include funds for additional shielded space for the long-term storage of the cylinders of gases. Temporary storage could be provided in the model plant in the fuel storage area. Shipment of the cylinders to a permanent storage facility is expected as presented in Management of Noble-Gas Fission-Product Wastes From Reprocessing Spent Fuels, ORNL-TM-2677.

[g]The $CaCO_3$, including 10% excess $Ca(OH)_2$, is produced as a wet filter cake (~40 wt % water). The costs do not include a facility for on-site storage of the $CaCO_3$.

Table 7.1. Latitude-longitude coordinates used to derive data sets for population distribution

	Latitude (N)	Longitude (W)
Midwestern	35° 52' 50"	97° 35' 00"
	38° 12' 18"	90° 28' 28"
	41° 22' 43"	88° 16' 36"
Coastal	33° 15' 00"	81° 29' 20"
	33° 53' 13"	80° 55' 58"
	34° 19' 19"	77° 56' 12"

Table 7.2. Representative population distribution at successive distances for midwestern site

Sector	Radial distance (miles)											
	0-0.5	0.5-1	1-2	2-3	3-4	4-5	5-10	10-15	15-25	25-35	35-45	45-55
N	0	0	0	0	0	252	2,007	1,037	19,193	108,738	96,229	46,889
NNE	0	0	0	0	0	816	847	7,688	40,643	347,330	300,030	300,804
NE	0	0	0	0	0	709	936	23,608	22,601	77,981	625,661	575,054
ENE	0	0	0	0	652	1,197	1,906	1,377	8,737	85,826	192,983	110,272
E	0	0	0	365	0	452	3,506	254	1,824	10,629	14,875	24,482
ESE	0	0	0	0	69	2	799	972	3,323	4,470	8,449	4,378
SE	0	0	0	13	537	482	1,022	696	3,241	23,827	5,080	15,453
SSE	0	0	0	0	0	0	1,796	706	10,056	41,868	4,461	7,339
S	0	0	0	87	0	72	1,498	908	30,234	100,668	10,935	17,328
SSW	0	0	0	0	0	98	626	586	3,588	6,416	7,425	3,933
SW	0	0	146	0	0	0	2,233	428	2,614	6,862	1,717	3,257
WSW	0	0	0	0	526	0	907	202	1,380	8,621	2,690	4,601
W	0	0	0	0	0	0	3,128	655	4,400	8,192	14,438	8,317
WNW	0	0	0	0	132	77	505	402	1,424	6,379	4,908	3,646
NW	0	260	0	0	0	0	346	1,083	8,288	5,991	6,200	4,146
NNW	0	0	0	0	544	0	579	829	5,823	5,027	28,615	20,359
Total (by distance)	0	260 ±449[a]	146 ±220	465 ±804	2,460 ±1,453	4,157 ±4,280	22,641 ±8,469	40,498 ±49,447	167,369 ±42,111	848,825 ±378,192	1,324,696 ±1,536,279	1,150,618 ±1,698,458
Cumulative	0	260	406	871	3,331	7,488	30,129	70,627	237,996	1,086,821	2,411,517	3,562,135
Density (ind./mile^2)	← 95 →						96	← 126 →		← 440 →		

[a]Standard deviation of the mean (total).

Table 7.3. Representative population distribution at successive distances for coastal plain site

Sector	Radial distance (miles) 0-0.5	0.5-1	1-2	2-3	3-4	4-5	5-10	10-15	15-25	25-35	35-45	45-55
N	0	0	0	151	0	46	10,358	7,761	3,512	4,060	4,835	9,942
NNE	0	0	0	0	0	0	965	1,147	1,978	3,115	5,985	17,515
NE	0	0	0	0	0	0	438	284	1,139	6,646	27,892	7,382
ENE	0	0	0	0	443	0	847	1,119	4,112	6,321	12,413	9,022
E	0	0	0	0	0	239	2,539	801	1,553	17,556	4,215	5,544
ESE	0	0	0	0	0	0	1,726	420	660	2,463	4,700	6,466
SE	0	0	0	0	246	213	1,710	933	1,453	3,261	2,909	4,130
SSE	0	0	0	35	282	0	5,954	1,780	3,546	2,991	3,247	3,380
S	0	0	0	0	250	570	12,327	1,095	2,803	9,367	2,829	2,744
SSW	0	0	0	0	0	0	0	318	1,518	2,978	5,556	4,590
SW	0	0	0	0	0	0	710	990	1,620	3,953	4,320	4,846
WSW	0	1,112	0	0	0	0	0	470	732	3,309	2,833	13,724
W	0	0	0	0	0	0	1,313	669	1,975	5,684	7,106	10,573
WNW	0	0	0	0	0	0	1,568	4,341	5,456	42,402	24,875	7,668
NW	0	0	0	0	0	7	7,970	11,817	8,353	13,856	4,110	7,239
NNW	0	0	0	0	421	310	15,334	22,775	4,024	8,447	5,564	9,189
Total (by distance)	0	1,112 ±1,926[a]	0 -	186 ±237	1,642 ±927	1,385 ±1,555	63,759 ±54,948	56,720 ±79,376	44,434 ±17,548	136,409 ±93,262	123,389 ±30,247	123,954 ±29,498
Cumulative	0	1,112	1,112	1,298	2,940	4,325	68,084	12,804	169,238	305,631	42,902	552,974
Density (ind./mile^2)	← 55 →						289	← 61 →		← 51 →		

[a]Standard deviation of the mean (total).

Table 7.4. Maximum dose committed to individuals from airborne effluents from one year's operation of the model HTGR fuel reprocessing plant[a]

Radwaste treatment case	Maximum total-body dose (millirem)	Maximum adult organ dose (millirem)									
		GI tract	Bone	Thyroid	Lungs	Muscle	Kidney	Liver	Spleen	Testes	Ovaries
					Midwestern site						
1	2.9E+1	1.7E+1	4.2E+1	2.1E+2	2.0E+1	2.8E+1	2.2E+1	2.2E+1	1.9E+1	1.9E+1	1.6E+1
2a	2.8E+1	1.6E+1	4.0E+1	2.5E+1	1.9E+1	2.7E+1	2.1E+1	2.2E+1	1.9E+1	1.7E+1	1.6E+1
2b	2.7E+1	1.6E+1	4.0E+1	1.9E+1	1.9E+1	2.7E+1	2.1E+1	2.1E+1	1.9E+1	1.7E+1	1.6E+1
2c	2.7E+1	1.6E+1	4.0E+1	1.9E+1	1.9E+1	2.7E+1	2.1E+1	2.1E+1	1.9E+1	1.7E+1	1.6E+1
2d	2.7E+1	1.6E+1	4.0E+1	2.4E+1	1.9E+1	2.7E+1	2.1E+1	2.1E+1	1.9E+1	1.7E+1	1.6E+1
3	2.7E+1	1.3E+1	3.5E+1	2.0E+2	1.8E+1	2.7E+1	2.0E+1	2.0E+1	1.7E+1	1.7E+1	1.5E+1
4	2.1E+1	9.2E00	3.5E+1	2.0E+2	1.2E+1	2.1E+1	1.4E+1	1.5E+1	1.2E+1	1.1E+1	8.9E00
5	2.1E+1	7.3E00	2.8E+1	2.0E+2	1.1E+1	2.1E+1	1.3E+1	1.4E+1	1.2E+1	1.1E+1	9.9E00
6	3.9E00	2.8E00	4.5E+1	1.9E+2	3.3E00	3.8E00	3.4E00	3.3E00	3.2E00	4.1E00	2.5E00
7	2.6E-1	1.3E-1	3.3E-1	7.0E-1	1.7E-1	2.6E-1	1.8E-1	1.2E-1	1.7E-1	1.6E-1	1.5E-1
					Coastal site						
1	2.2E+1	1.3E+1	3.2E+1	1.6E+2	1.5E+1	2.1E+1	1.6E+1	1.7E+1	1.5E+1	1.4E+1	1.2E+1
2a	2.1E+1	1.2E+1	3.1E+1	1.9E+1	1.4E+1	2.1E+1	1.6E+1	1.6E+1	1.4E+1	1.3E+1	1.2E+1
2b	2.1E+1	1.2E+1	3.1E+1	1.4E+1	1.4E+1	2.1E+1	1.6E+1	1.6E+1	1.4E+1	1.3E+1	1.2E+1
2c	2.1E+1	1.2E+1	3.1E+1	1.4E+1	1.4E+1	2.1E+1	1.6E+1	1.6E+1	1.4E+1	1.3E+1	1.2E+1
2d	2.1E+1	1.2E+1	3.1E+1	1.8E+1	1.4E+1	2.1E+1	1.6E+1	1.6E+1	1.4E+1	1.3E+1	1.2E+1
3	2.1E+1	9.9E00	2.7E+1	1.6E+2	1.4E+1	2.0E+1	1.5E+1	1.5E+1	1.3E+1	1.3E+1	1.2E+1
4	1.6E+1	7.0E00	2.6E+1	1.5E+2	9.3E00	1.6E+1	1.1E+1	1.1E+1	9.0E00	8.5E00	6.7E00
5	1.6E+1	5.5E00	2.1E+1	1.5E+2	8.3E00	1.6E+1	1.0E+1	1.1E+1	8.8E00	8.2E00	7.5E00
6	2.9E00	2.1E00	3.3E00	1.4E+2	2.5E00	2.9E00	2.6E00	2.4E00	2.4E00	3.1E00	2.4E00
7	2.0E-1	9.7E-2	2.5E-1	5.3E-1	1.3E-1	1.9E-1	1.4E-1	1.5E-1	1.3E-1	1.2E-1	1.1E-1

[a]Maximum dose at 1.5 miles from plant stack. The dose ratios for the midwestern and coastal sites at 0.5 mile from the plant are 1.221 and 1.126, respectively, and at 1 mile are 1.004 and 1.129, respectively, of the dose at 1.5 miles listed in the above table. The absolute maximum dose is received at 0.56 mile (900 m) from the plant-stack ground zero, and the dose ratios for the midwestern and coastal sites are 1.277 and 1.246, respectively, of the dose for the 1.5-mile distance.

Table 7.5. Summary of annual doses to the population from airborne effluents from one year's operation of the model HTGR fuel reprocessing plant[a]

Radwaste treatment case	Total-body dose (person-rem)	Population organ doses (person-organ-rem)									
		GI tract	Bone	Thyroid	Lungs	Muscle	Kidneys	Liver	Spleen	Testes	Ovaries
					Midwestern site						
1	2.36E+3	1.33E+3	3.60E+3	1.05E+4	1.61E+3	2.31E+3	1.73E+3	1.77E+3	1.55E+3	1.49E+3	1.32E+3
2a	2.29E+3	1.32E+3	3.50E+3	2.00E+3	1.56E+3	2.24E+3	1.68E+3	1.74E+3	1.52E+3	1.40E+3	1.29E+3
2b	2.28E+3	1.32E+3	3.49E+3	1.50E+3	1.56E+3	2.24E+3	1.68E+3	1.74E+3	1.52E+3	1.40E+3	1.28E+3
2c	2.28E+3	1.32E+3	3.49E+3	1.51E+3	1.56E+3	2.24E+3	1.68E+3	1.74E+3	1.52E+3	1.40E+3	1.28E+3
2d	2.28E+3	1.32E+3	3.49E+3	1.50E+3	1.56E+3	2.24E+3	1.68E+3	1.74E+3	1.52E+3	1.40E+3	1.28E+3
3	2.26E+3	1.10E+3	3.22E+3	1.03E+4	1.52E+3	2.21E+3	1.63E+3	1.67E+3	1.45E+3	1.40E+3	1.27E+3
4	1.75E+3	7.14E+2	2.99E+3	9.84E+3	9.91E+2	1.70E+3	1.11E+3	1.16E+3	9.39E+2	8.80E+2	7.05E+2
5	1.76E+3	6.04E+2	2.64E+3	9.85E+3	8.99E+2	1.75E+3	1.09E+3	1.18E+3	9.59E+2	8.80E+2	8.16E+2
6	3.01E+2	2.26E+2	3.45E+2	9.18E+3	2.64E+2	2.96E+2	2.68E+2	2.57E+2	2.53E+2	3.14E+2	2.50E+2
7	2.20E+1	1.07E+1	3.07E+1	3.75E+1	1.44E+1	2.14E+1	1.54E+1	1.64E+1	1.42E+1	1.25E+1	1.24E+1
					Coastal site						
1	7.01E+2	4.02E+2	1.08E+3	3.51E+3	4.73E+2	6.90E+2	5.16E+2	5.27E+2	4.62E+2	4.46E+2	3.93E+2
2a	6.77E+2	3.99E+2	1.05E+3	5.55E+2	4.58E+2	6.67E+2	5.00E+2	5.15E+2	4.53E+2	4.14E+2	3.81E+2
2b	6.76E+2	3.98E+2	1.05E+3	4.45E+2	4.57E+2	6.66E+2	4.99E+2	5.14E+2	4.50E+2	4.13E+2	3.81E+2
2c	6.76E+2	3.98E+2	1.05E+3	4.48E+2	4.57E+2	6.66E+2	4.99E+2	5.14E+2	4.50E+2	4.13E+2	3.81E+2
2d	6.76E+2	3.98E+2	1.05E+3	4.44E+2	4.57E+2	6.66E+2	4.99E+2	5.14E+2	4.50E+2	4.13E+2	3.81E+2
3	6.69E+2	3.24E+2	9.54E+2	3.48E+3	4.42E+2	6.55E+2	4.85E+2	4.94E+2	4.27E+2	4.13E+2	3.75E+2
4	5.20E+2	2.20E+2	9.02E+2	3.33E+3	2.91E+2	5.09E+2	3.34E+2	3.46E+2	2.81E+2	2.65E+2	2.11E+2
5	5.23E+2	1.79E+2	7.87E+2	3.33E+3	2.68E+2	5.22E+2	3.25E+2	3.50E+2	2.85E+2	2.65E+2	2.43E+2
6	9.27E+1	6.74E+1	1.07E+2	3.14E+3	8.01E+1	9.08E+1	8.14E+1	7.78E+1	7.65E+1	9.77E+1	7.59E+1
7	6.47E00	3.20E00	9.17E00	1.22E+1	4.21E00	6.31E00	4.54E00	4.78E00	4.17E00	3.85E00	3.64E00

[a]To entire population within 55 miles of the model plant; daily intake assumed to be 0.25 kg of vegetables, 0.3 liter of milk, and 0.3 kg of meat. It is assumed that 100% of the food consumed is produced or grown at the location of residence.

Table 7.6. Contribution of exposure modes to total-body dose from the airborne effluents of the model HTGR fuel reprocessing plant[a]

Exposure mode	Annual dose		Percent of total dose	
	Population person-rem	Adult maximum mrem	Population	Adult maximum
Submersion in air	82.8	0.83	3.5	2.9
Contaminated ground	150.1	1.65	6.4	5.8
Inhalation[b]	110.6	1.33	4.7	4.6
Ingestion[c]	2013.	24.88	85.4	86.7

[a]These values are for the base Case 1 at the midwestern site. Population doses pertain to people living within 55 miles of the plant; adult maximum doses pertain to an adult living 1.5 miles from the plant stack.

[b]Daily intake is assumed to be 20 m^3 of air.

[c]Daily intake is assumed to be 0.25 kg of vegetables, 1 liter of milk for the maximum adult or 0.3 liter to the general population, and 0.3 kg of meat. It is further assumed that 100% of the consumed food is produced at the area of residence.

Table 7.7. Contribution of principal radionuclides to total-body and organ doses to individuals residing at 1.5 miles from the model HTGR fuel reprocessing plant[a]

Radionuclide[b]	Percent of total-body and organ dose				
	Total-body	GI tract	Bone	Thyroid	Lung
H-3	25.79	44.52	17.42	3.61	37.96
C-14	60.98	27.43	56.50	3.92	39.35
Kr-85	2.89	3.78	3.34	0.42	10.82
Rn-220	0.26	0.57	1.27	0.04	0.29
I-129	3.76	0.68	3.58	71.12	3.31
I-131	0.34	0.34	0.24	20.01	0.51
Ru-103	0.01	0.42	0.01	<0.01	0.02
Ru-106	0.08	11.61	0.12	0.01	0.16
Co-60	0.01	0.01	0.01	<0.01	0.01
Sr-89	0.02	0.19	0.36	<0.01	0.03
Sr-90	0.31	0.16	10.59	0.04	0.47
Y-91	<0.01	0.18	<0.01	<0.01	0.01
Zr-95	0.09	0.27	0.07	0.01	0.14
Nb-95	0.05	0.49	0.04	0.01	0.07
Cs-134	2.44	2.84	1.58	0.32	2.34
Cs-137	2.47	3.26	2.15	0.36	3.16
Ce-149	0.05	2.44	0.09	0.01	0.17
Eu-154	0.14	0.19	0.11	0.02	0.19
Ra-224	<0.01	0.09	0.02	<0.01	0.02
Th-228	0.02	0.02	0.24	<0.01	0.41
Pa-233	0.01	0.13	0.01	<0.01	0.01
U-232	0.21	0.28	0.28	0.03	0.41
Pu-238	0.06	0.01	1.68	0.01	0.12
Cm-244	0.03	0.09	0.29	<0.01	0.04

[a]Radwaste treatment Case 1.

[b]Radionuclides contributing <0.01% of the total-body or organ dose are not listed.

Table 7.7(a). Contribution of principal radionuclides to the population total-body and organ doses of the midwestern site out to a distance of 55 miles from the model HTGR fuel reprocessing plant[a]

Radionuclide[b]	Percent of total-body and organ dose				
	Total-body	GI tract	Bone	Thyroid	Lung
H-3	26.29	46.65	17.23	5.93	38.67
C-14	62.35	28.76	64.50	6.44	40.06
Kr-85	3.51	4.48	2.81	0.83	10.55
Rn-220	0.15	0.31	0.66	0.03	1.64
I-129	3.05	0.59	2.86	71.79	2.58
I-131	0.18	0.19	0.12	13.98	0.26
Ru-103	0.01	0.36	0.01	<0.01	0.02
Ru-106	0.07	10.24	0.10	0.02	0.13
Co-60	0.01	0.01	0.01	<0.01	0.01
Sr-89	0.01	0.13	0.23	<0.01	0.02
Sr-90	0.20	0.11	6.65	0.05	0.30
Y-91	<0.01	0.16	<0.01	<0.01	<0.01
Zr-95	0.08	0.24	0.06	0.02	0.11
Nb-95	0.04	0.39	0.03	<0.01	0.06
Cs-134	1.65	2.00	1.12	0.35	1.87
Cs-137	1.99	2.61	1.64	0.47	2.65
Ce-144	0.04	2.14	0.07	0.01	0.13
Eu-154	0.12	0.17	0.09	0.03	0.17
Ra-224	<0.01	0.03	0.01	<0.01	0.02
Th-228	0.02	0.02	0.17	<0.01	0.30
Pa-233	0.01	0.11	0.01	<0.01	0.01
U-232	0.18	0.25	0.22	0.04	0.33
Pu-238	0.05	<0.01	1.18	0.01	0.09
Cm-244	0.02	0.08	0.24	<0.01	0.03

[a]Radwaste treatment Case 1.

[b]Radionuclides contributing <0.01% to total-body or organ dose are not listed.

Table 7.7(b). Contribution of principal radionuclides to the total-body and organ doses of the southeastern coastal site out to a distance of 55 miles from the model HTGR fuel reprocessing plant[a]

Radionuclide[b]	Percent of total-body and organ dose				
	Total-body	GI tract	Bone	Thyroid	Lung
H-3	26.08	45.61	16.93	5.22	38.79
C-14	61.88	28.12	63.44	5.67	40.21
Kr-85	2.80	3.51	2.22	0.59	8.51
Rn-220	0.18	0.38	0.79	0.04	1.91
I-129	3.50	0.66	3.26	73.16	3.01
I-131	0.20	0.21	0.14	14.32	0.31
Ru-103	0.01	0.41	0.01	<0.01	0.02
Ru-106	0.08	11.55	0.11	0.02	0.15
Co-60	0.01	0.01	0.01	<0.01	0.01
Sr-89	0.01	0.15	0.26	<0.01	0.02
Sr-90	0.23	0.12	7.54	0.05	0.34
Y-91	<0.01	0.18	<0.01	<0.01	0.01
Zr-95	0.09	0.27	0.07	0.02	0.13
Nb-95	0.05	0.44	0.03	0.01	0.07
Cs-134	1.89	2.26	1.27	0.35	2.18
Cs-137	2.28	2.96	1.86	0.48	3.07
Ce-144	0.05	2.42	0.07	0.01	0.14
Eu-154	0.14	0.19	0.10	0.03	0.19
Ra-224	<0.01	0.04	0.01	<0.01	0.02
Th-228	0.02	0.23	0.17	<0.01	0.30
Pa-233	0.01	0.13	0.01	<0.01	0.14
U-232	0.20	0.28	0.25	0.04	0.38
Pu-238	0.05	0.01	1.19	0.01	0.09
Cm-244	0.25	0.09	0.27	0.01	0.04

[a]Radwaste treatment Case 1.

[b]Radionuclides contributing <0.01% to total-body or organ dose are not listed.

Table 7.8. Percent contribution by pathway to adult maximum total-body dose from airborne effluents from the model HTGR fuel reprocessing plant[a]

Radionuclide[b]	Percent total-body dose			
	Contaminated ground	Submersion in air	Ingestion	Inhalation
H-3	-	-	21.4	4.5
C-14	-	-	61.2	-
Kr-85	-	2.9	-	-
Sr-90	-	-	0.3	-
Zr-95	0.1	-	-	-
Ru-106	0.1	-	-	-
I-129	1.5	-	2.3	-
I-131	-	-	0.3	-
Cs-134	1.5	-	1.0	-
Cs-137	2.2	-	0.3	-
Eu-154	0.1	-	-	-
U-232	0.2	-	-	-
Pu-238	-	-	-	0.1

[a]Radwaste treatment Case 1; 1.5 miles from plant stack.

[b]Radionuclides contributing <0.1% are not included.

Table 7.9. Percent contribution to the total organ dose of inhaled and ingested radionuclides from the airborne effluents from the model HTGR fuel reprocessing plant[a]

	GI tract		Bone		Thyroid		Lung	
Radionuclide	Inhaled	Ingested	Inhaled	Ingested	Inhaled	Ingested	Inhaled	Ingested
H-3	7.9	36.8	3.1	14.5	0.6	3.0	6.7	31.4
C-14	<0.1	27.5	<0.1	57.2	<0.1	3.9	<0.1	39.5
Sr-90	<0.1	0.2	<0.1	10.6	<0.1	<0.1	<0.1	0.4
Ru-103	<0.1	0.4	<0.1	<0.1	<0.1	<0.1	<0.1	<0.1
Ru-106	<0.1	11.6	<0.1	<0.1	<0.1	<0.1	<0.1	<0.1
I-129	<0.1	0.2	<0.1	1.8	<0.1	71.1	<0.1	2.5
I-131	<0.1	0.3	<0.1	0.2	<0.1	20.0	<0.1	0.5
Cs-134	<0.1	1.1	<0.1	0.4	<0.1	0.1	<0.1	0.3
Cs-137	<0.1	0.5	<0.1	0.3	<0.1	<0.1	<0.1	<0.1
Ce-144	<0.1	2.4	<0.1	<0.1	<0.1	<0.1	0.1	<0.1
Eu-154	<0.1	<0.1	<0.1	<0.1	<0.1	<0.1	<0.1	<0.1
Pa-233	<0.1	0.1	<0.1	<0.1	<0.1	<0.1	<0.1	<0.1
U-232	<0.1	<0.1	<0.1	0.1	<0.1	<0.1	0.1	<0.1
Pu-238	<0.1	<0.1	1.7	<0.1	<0.1	<0.1	0.1	<0.1

[a]Radwaste treatment Case 1; 1.5 miles from plant stack.

Table 7.10. Curies of long-lived radionuclides released during the 30-year life of the model HTGR fuel reprocessing plant

Radionuclide	Total released[a] during 30-year plant life (Ci)	Activity concentration (Ci/m^2)[b]
C-14	2.2E+5	-
Ni-63	4.5E-5	1.8E-15
I-129	8.1E+1	3.3E-9
U-232	2.2E-1	8.9E-12
U-233	6.0E-2	2.4E-12
U-234	1.5E-2	6.1E-13
U-235	3.3E-6	1.3E-16
U-236	1.5E-4	6.1E-15
U-238	1.8E-7	7.3E-18
N-237	2.5E-5	1.0E-15
Pu-238	2.8E-1	1.1E-11
Pu-239	2.2E-4	8.9E-15
Pu-240	4.5E-4	1.8E-14
Pu-242	5.7E-6	2.3E-16
Am-241	2.6E-4	1.1E-14
Am-243	9.9E-5	4.0E-15

[a]Radwaste treatment Case 1. These values are divided by 2.46×10^{10} m^2 (area in a 55-mile radius) to give assumed deposition.

[b]Deposition is assumed to occur uniformly out to a distance of 55 miles.

Table 7.11. Contributions of radionuclides and exposure modes to the annual total-body dose[a] to individuals from the time of cessation of the HTGR fuel reprocessing plant operation until significant decay of all radionuclides occurs[b]

Radionuclide	Exposure mode			
	Contaminated ground (millirem)	Inhalation (millirem)	Ingestion (millirem)	Total (millirem)
C-14	-	-	3.2E-1	3.2E-1
Ni-63	-	7.6E-14	4.6E-11	4.6E-11
I-129	4.4E-2	2.3E-7	3.6E-4	4.4E-2
U-232	4.5E-3	4.9E-7	4.0E-6	4.5E-3
U-233	4.4E-6	2.4E-8	2.0E-7	4.6E-6
U-234	1.7E-6	6.0E-9	4.8E-8	1.8E-6
U-235	9.1E-9	1.2E-12	9.9E-12	9.1E-9
U-236	1.5E-8	5.5E-11	3.2E-9	1.8E-8
U-238	3.2E-11	6.4E-14	5.0E-13	3.3E-11
Np-237	1.7E-8	1.1E-9	8.3E-11	1.8E-8
Pu-238	3.1E-5	1.2E-5	1.6E-7	4.3E-5
Pu-239	9.1E-9	1.1E-8	1.4E-10	2.0E-8
Pu-240	4.3E-8	2.2E-8	2.1E-10	6.5E-8
Pu-242	5.3E-10	2.6E-10	3.5E-12	7.9E-10
Am-241	1.3E-7	1.1E-8	2.9E-10	1.4E-7
Am-243	1.7E-7	4.0E-9	1.2E-10	1.7E-7
Total	4.9E-2	1.3E-5	3.2E-1	3.7E-1

[a]Dose is average total-body dose to the individual out to a distance of 55 miles.

[b]The plant is assumed to operate for 30 years with the base Case 1 radwaste treatments prior to shutdown.

Table 7.12. Annual dose[a] to individuals (resulting from radionuclides released during the operating life of the model HTGR fuel reprocessing plant) from the time of cessation of plant operation until significant decay of all radionuclides occurs[b]

	Organ dose (millirem) per exposure mode							
	Bone		Kidney		Lung		Thyroid	
Radionuclide	Inhalation	Ingestion	Inhalation	Ingestion	Inhalation	Ingestion	Inhalation	Ingestion
C-14		2.0E-1		1.8E-1		1.4E-1		1.5E-1
Ni-63	2.4E-12	1.5E-9	7.6E-14	4.6E-11	5.7E-13	4.6E-11	7.6E-14	4.6E-11
I-129	2.3E-7	3.6E-4	2.3E-7	3.6E-4	2.1E-6	3.6E-4	9.9E-5	2.8E-1
U-232	7.0E-6	5.7E-5	7.5E-7	6.0E-6	1.5E-5	4.0E-6	4.9E-7	4.8E-6
U-233	4.0E-7	3.2E-6	9.1E-8	7.4E-7	9.9E-7	2.0E-7	2.4E-8	2.4E-7
U-234	9.9E-8	7.8E-7	2.3E-8	1.8E-7	2.4E-7	4.8E-8	6.0E-9	5.8E-8
U-235	2.1E-11	1.7E-10	4.9E-12	4.0E-11	5.2E-11	9.9E-12	1.2E-12	1.2E-11
U-236	9.1E-10	7.4E-9	2.1E-10	1.7E-9	2.3E-9	3.2E-9	5.5E-11	3.9E-9
U-238	1.1E-12	8.3E-12	2.4E-13	2.0E-12	2.6E-12	5.0E-13	6.4E-14	6.1E-13
Np-237	2.6E-8	2.1E-9	8.1E-9	3.0E-10	4.2E-10	8.3E-11	1.1E-9	1.0E-10
Pu-238	4.8E-4	6.2E-6	5.1E-5	6.7E-7	1.6E-5	1.6E-7	1.2E-5	1.9E-7
Pu-239	4.4E-7	5.7E-9	4.5E-8	5.9E-10	1.2E-8	1.4E-10	1.1E-8	1.7E-10
Pu-240	9.1E-7	1.2E-8	9.1E-8	1.2E-9	2.5E-8	2.9E-10	2.2E-8	3.5E-10
Pu-242	1.1E-8	1.4E-10	1.2E-9	1.5E-11	3.0E-10	3.5E-12	2.6E-10	4.2E-12
Am-241	1.7E-7	4.4E-9	8.0E-8	2.1E-9	4.9E-9	2.9E-10	1.1E-8	3.5E-10
Am-243	6.2E-8	1.7E-9	3.0E-8	8.2E-10	1.8E-9	1.2E-10	4.0E-9	1.4E-10
Total	4.9E-4	2.0E-1	5.2E-5	1.8E-1	3.4E-5	1.4E-1	1.1E-4	4.3E-1

[a]Dose is the average organ dose to the individual out to a distance of 55 miles.

[b]The plant is assumed to operate for 30 years with the base Case 1 radwaste treatment prior to shutdown.

Table 7.13. Annual dose[a] to the population (resulting from radionuclides released from the model reprocessing plant) from the time of cessation of plant operation until significant decay of all radionuclides occurs[b]

Radionuclide	Dose (person-rem per 3.6 x 10^6 persons)[c]				
	Total-body	Bone	Kidney	Lung	Thyroid
C-14	1.2E+3	7.2E+2	6.5E+2	5.0E+2	5.4E+2
Ni-63	1.7E-7	5.4E-6	1.7E-1	1.7E-7	1.7E-7
I-129	1.6E+2	1.2E00	1.2E00	1.3E00	8.3E+2
U-232	1.6E+1	2.3E-1	2.5E-2	6.8E-2	1.6E-2
U-233	1.7E-1	1.3E-2	3.0E-3	4.3E-3	8.0E-4
U-234	6.1E-3	3.1E-3	7.4E-4	1.1E-3	2.0E-4
U-235	2.8E-5	7.0E-7	1.6E-7	2.2E-7	4.0E-8
U-236	6.5E-5	3.0E-5	7.0E-6	2.0E-5	1.2E-5
U-238	1.2E-7	3.3E-8	8.0E-9	1.1E-8	2.1E-9
Np-237	6.6E-5	9.9E-5	3.1E-5	1.8E-6	4.1E-6
Pu-238	1.6E-1	1.7E00	1.9E-1	5.7E-2	4.5E-2
Pu-239	7.2E-5	1.6E-3	1.7E-4	4.2E-5	3.9E-5
Pu-240	2.4E-4	3.3E-3	3.3E-4	9.1E-5	8.1E-5
Pu-242	2.9E-6	3.9E-5	4.2E-6	1.1E-6	9.9E-7
Am-241	5.1E-4	6.1E-4	3.0E-4	2.0E-5	4.0E-5
Am-243	6.1E-4	2.3E-4	1.1E-4	6.9E-6	1.5E-5
Total	1.4E+3	7.2E+2	6.5E+2	5.0E+2	1.4E+3

[a]Population dose is based on the average dose out to a distance of 55 miles.

[b]The plant is assumed to operate for 30 years with the base Case 1 radwaste treatments prior to shutdown.

[c]Actual population within the 55-mile radius of the midwestern plant site.

Table 7.14. Effect of buoyancy of hot stack gases on plume rise and doses from carbon-14 at 1.5 miles from model HTGR fuel reprocessing plant

Temperature of stack gases (°F)	Plume rise (meters)	Fractional residual dose
55[a]	36[b]	1.00
125	180[c]	0.35
150	201[c]	0.29
200	229[c]	0.22
250	253[c]	0.18
300	273[c]	0.15

[a]Midwestern site average air temperature = 55°F.

[b]Plume rise resulting only from the momentum of the stack gases.

[c]Plume rise resulting only from buoyancy. Stack gas momentum would add only a small amount to these values.

Table 8.1. Cost/benefit analysis for model HTGR fuel reprocessing plant at the midwestern site

Radwaste treatment case	Annual cost[a] ($1000)	Reprocessing cost ($/kg HM)	Population annual average dose and (overall dose reduction), person-rem[b]				Adult maximum[c] total-body dose and (overall dose reduction) (mrem)	Cost/benefit ratios, total body	
			Total body	GI tract	Bone	Thyroid		$\left(\frac{\$10^3}{\text{population average person-rem}}\right)$	$\left(\frac{\$10^3}{\text{adult maximum mrem}}\right)$
1	0	0.00	2,360	1,330	3,600	10,400	28.7	0.	0
2a	35	0.08	2,280 (75)	1,320 (10)	3,500 (100)	1,800 (8,600)	27.6 (1.13)	0.35	31
2b	441	0.98	2,280 (75)	1,320 (10)	3,500 (110)	1,510 (8,900)	27.5 (1.17)	4.4	377
2c	471	1.05	2,280 (75)	1,320 (10)	3,500 (110)	1,510 (8,900)	27.5 (1.17)	4.7	403
2d	379	0.84	2,280 (75)	1,320 (10)	3,500 (110)	1,520 (8,900)	27.5 (1.17)	3.8	324
3	303	0.67	2,260 (95)	1,100 (230)	3,200 (380)	10,300 (90)	27.1 (1.55)	3.0	195
4	664	1.48	1,740 (610)	710 (610)	2,980 (610)	9,800 (600)	21.4 (7.33)	1.1	91
5	3,237	7.19	1,750 (600)	600 (730)	2,640 (960)	9,800 (600)	21.2 (7.52)	5.4	430
6	11,507	25.57	300 (2,060)	220 (1,100)	340 (3,250)	9,200 (1,300)	3.84 (24.8)	5.5	464
7	12,945	28.77	22 (2,340)	11 (1,320)	31 (3,570)	38 (10,400)	0.26 (28.4)	5.4	456

[a]Cost of additional equipment required for each case with reference to Case 1.

[b]The number in parentheses is the reduction in dose with reference to Case 1.

[c]At 1.5 miles from stack ground zero.

Table 8.2. Cost/benefit analysis for model HTGR fuel reprocessing plant at the east-coastal site

Radwaste treatment case	Annual cost[a] ($1000)	Reprocessing cost ($/kg HM)	Population annual average dose and (overall dose reduction), person-rem[b]				Adult maximum[c] total-body dose and (overall dose reduction) (mrem)	Cost/benefit ratios, total body	
			Total body	GI tract	Bone	Thyroid		$\left(\frac{\$10^3}{\text{population average person-rem}}\right)$	$\left(\frac{\$10^3}{\text{adult maximum mrem}}\right)$
1	0	0.00	700	400	1,080	3,500	22.2	0	0
2a	35	0.08	680 (25)	400 (0)	1,050 (40)	550 (2,960)	21.4 (0.88)	1.75	40
2b	441	0.98	680 (25)	400 (0)	1,050 (40)	450 (3,060)	21.3 (0.91)	22	485
2c	471	1.05	680 (25)	400 (0)	1,050 (40)	450 (3,060)	21.3 (0.91)	24	518
2d	379	0.84	680 (25)	400 (0)	1,050 (40)	450 (3,060)	27.5 (0.91)	19	416
3	303	0.67	670 (30)	320 (80)	950 (130)	3,480 (30)	21.0 (1.20)	10	253
4	664	1.48	520 (180)	220 (180)	900 (180)	3,330 (180)	16.6 (5.68)	3.7	117
5	3,237	7.19	520 (180)	180 (220)	790 (300)	3,330 (180)	16.4 (5.83)	18	555
6	11,507	25.57	92 (610)	67 (340)	110 (980)	3,140 (380)	2.98 (19.3)	19	596
7	12,945	28.77	6.5 (700)	3.2 (400)	9.2 (1,070)	12 (3,500)	0.20 (22.0)	19	588

[a]Cost of additional equipment required for each case with reference to Case 1.

[b]The number in parentheses is the reduction in dose with reference to Case 1.

[c]At 1.5 miles from stack ground zero.

Table 8.3. Cumulative annual cost increments, dose decrements, and cost/benefits for additional radwaste treatments at the model HTGR fuel reprocessing plant at the midwestern site

Radwaste treatment	Cumulative annual cost[a] increment ($\$10^3$)	Cumulative unit cost increment (\$/kg HM)	Population annual average dose and (overall dose reduction), person-rem[b]				Adult maximum[c] total-body dose and (overall dose reduction) (mrem)	Cost/benefit ratios, total body	
			Total body	GI tract	Bone	Thyroid		$\left(\frac{\$10^3}{\text{population average person-rem}}\right)$	$\left(\frac{\$10^3}{\text{adult maximum mrem}}\right)$
Case 1	0	0.00	2,360	1,330	3,600	10,450	28.7	0.	0
Add ion exchange in liquid stream to remove I_2 (Case 2a)	35	0.078	2,280 (75)	1,320 (10)	3,490 (110)	1,820 (8,630)	27.6 (1.13)	0.47	31
Add tritium bakeout and molecular sieve to remove H_2O (Case 4)	699	1.55	1,670 (690)	700 (620)	2,880 (720)	1,200 (9,240)	20.2 (8.5)	1.01	82
Add sand filter to remove semi-volatiles and particulates (Case 3)	1,002	2.23	1,580 (780)	480 (850)	2,500 (1,100)	1,110 (9,340)	18.7 (10.0)	1.28	100
Replace $Hg(NO_3)_2$-HNO_3 scrubber by Iodox process and use I_2 evolution at the dissolvers (Case 2c)	1,438	3.20	1,570 (780)	480 (850)	2,490 (1,100)	800 (9,640)	18.6 (10.0)	1.84	144
Add KALC process to remove noble gases and particulates (Case 5)	4,675	10.4	1,480 (880)	390 (940)	2,330 (1,270)	700 (9,740)	17.6 (11.1)	5.31	421
Add CO_2 fixation process to remove ^{14}C. This is Case 7.	12,945	28.8	23 (2,330)	13 (1,320)	35 (3,560)	39 (10,410)	0.28 (28.4)	5.56	456

[a]Cost of additional equipment required for each case with reference to Case 1.

[b]The number in parentheses is the reduction in dose with reference to Case 1.

[c]At 1.5 miles from stack ground zero.

Table 8.4. Cumulative annual cost increments, dose decrements, and cost/benefits for additional radwaste treatments at the model HTGR fuel reprocessing plant at the east-coastal site

Radwaste treatment	Cumulative annual cost[a] increment ($\$10^3$)	Cumulative unit cost increment (\$/kg HM)	Population annual average dose and (overall dose reduction), person-rem[b]				Adult maximum[c] total-body dose and (overall dose reduction) (mrem)	Cost/benefit ratios, total body	
			Total body	GI tract	Bone	Thyroid		$\left(\frac{\$10^3}{\text{population average person-rem}}\right)$	$\left(\frac{\$10^3}{\text{adult maximum mrem}}\right)$
Case 1	0	0.00	703	402	1,083	3,513	22.2	0.	0
Add ion exchange in liquid stream to remove I_2 (Case 2a)	35	0.078	678 (25)	398 (3)	1,048 (35)	553 (2,960)	21.4 (0.88)	1.40	40
Add tritium bakeout and molecular sieve to remove H_2O (Case 4)	699	1.55	497 (206)	217 (185)	866 (217)	371 (3,142)	15.7 (6.6)	3.39	106
Add sand filter to remove semi-volatiles and particulates (Case 3)	1,002	2.23	463 (240)	139 (263)	737 (346)	339 (3,174)	14.5 (7.8)	4.18	128
Replace $Hg(NO_3)_2$-HNO_3 scrubber by Iodox process and use I_2 evolution at the dissolvers (Case 2c)	1,438	3.20	462 (241)	139 (263)	736 (347)	235 (3,278)	14.4 (7.8)	5.97	184
Add KALC process to remove noble gases and particulates (Case 5)	4,675	10.4	437 (266)	116 (286)	691 (392)	210 (3,303)	13.6 (8.6)	17.60	544
Add CO_2 fixation process to remove ^{14}C. This is Case 7.	12,945	28.8	7 (696)	4 (398)	10 (1,073)	13 (3,500)	0.22 (22.0)	18.60	588

[a]Cost of additional equipment required for each case with reference to Case 1.

[b]The number in parentheses is the reduction in dose with reference to Case 1.

[c]At 1.5 miles from stack ground zero.

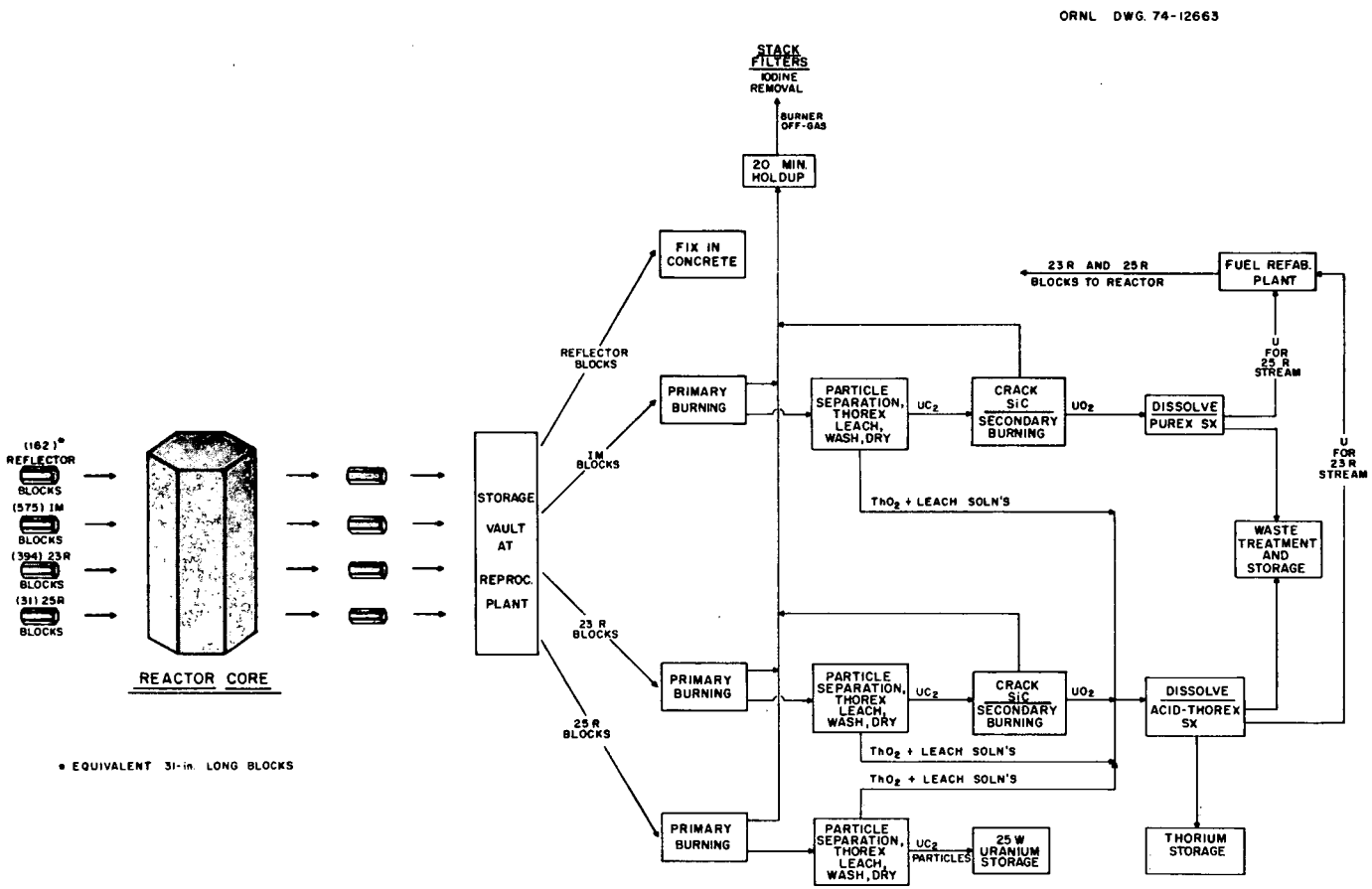

Fig. 3.1. Summary diagram of fuel flow in the HTGR cycle.

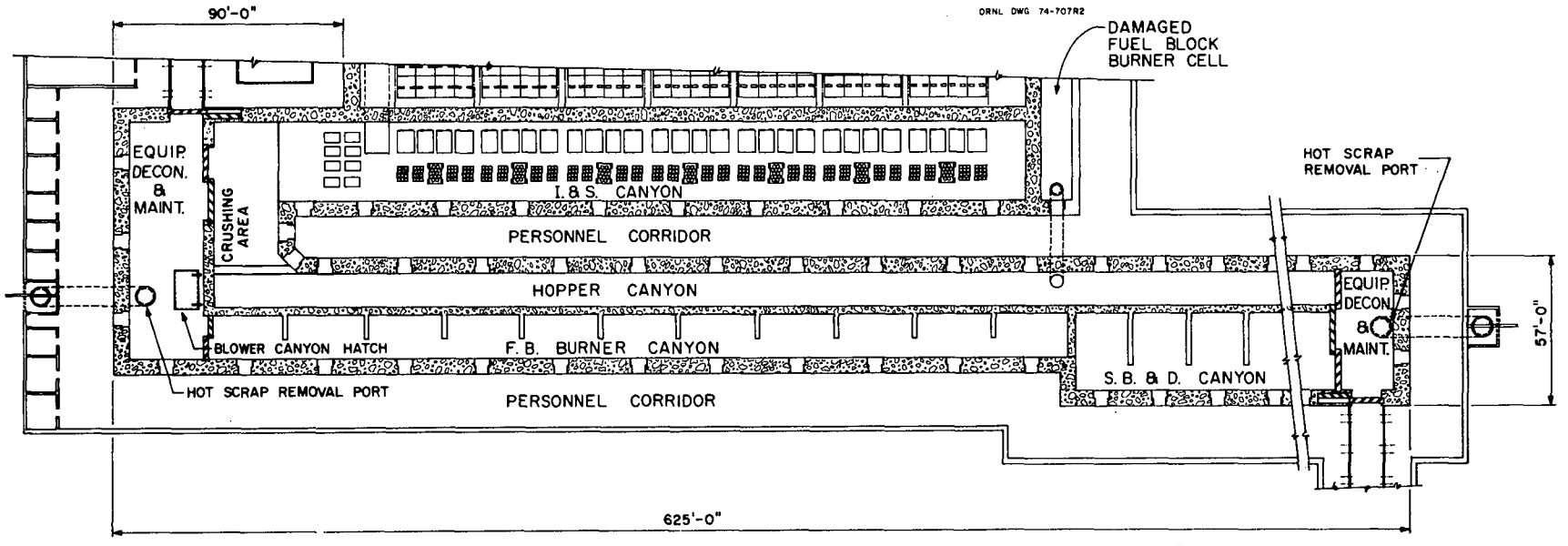

Fig. 4.1. Plan view of fluidized-bed burner canyon, the hopper canyon, identification and sorting (I and S) canyon, the equipment decontamination and maintenance cell(s), and the damaged fuel block burner cell. From Snider and Watkin.

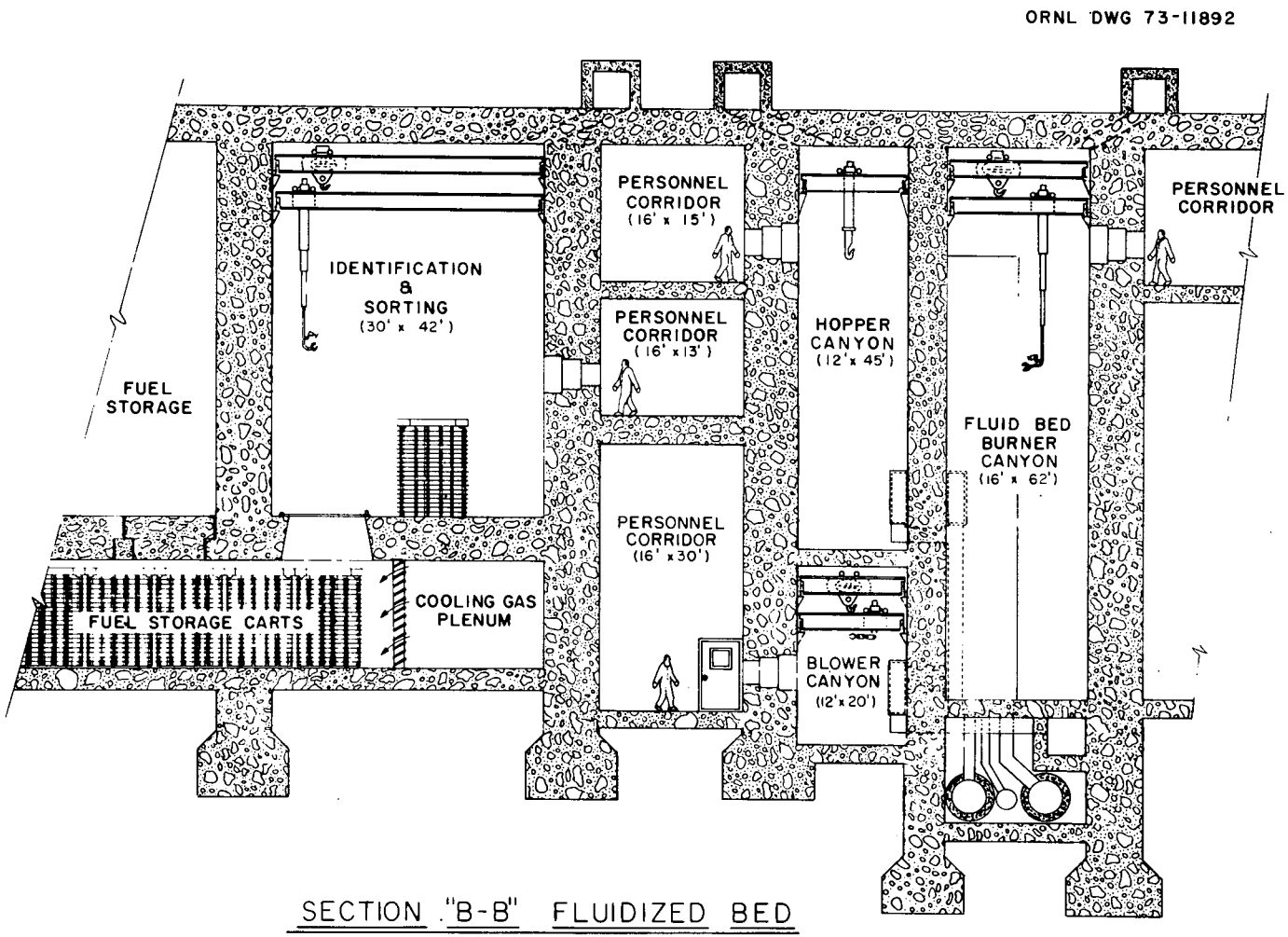

Fig. 4.2. Elevation view of the fluidized-bed burner showing the relationship of the identification and sorting (I and S) canyon, the blower canyon, and personnel corridors. From Snider and Watkin.

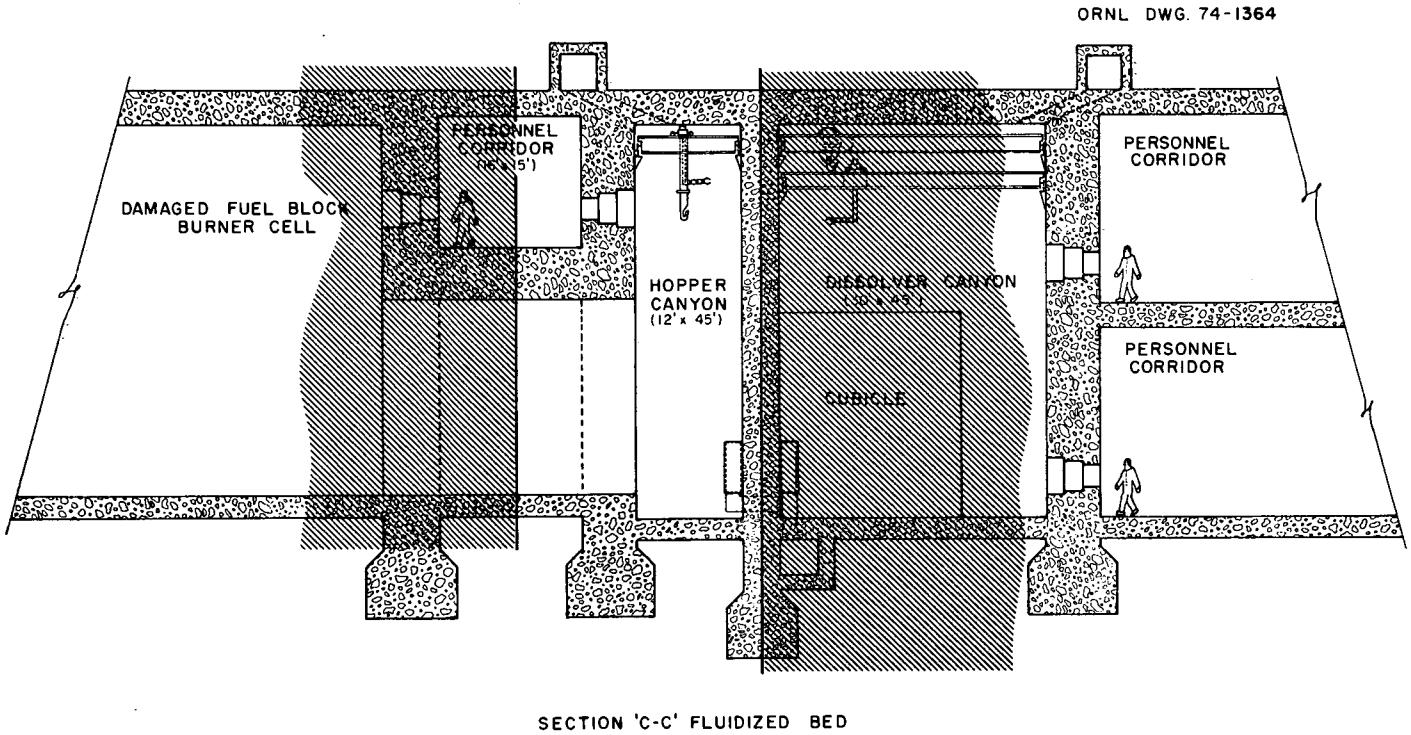

Fig. 4.3. Elevation view through the hopper canyon. From Snider and Watkin.

ORNL DWG. 74-8009

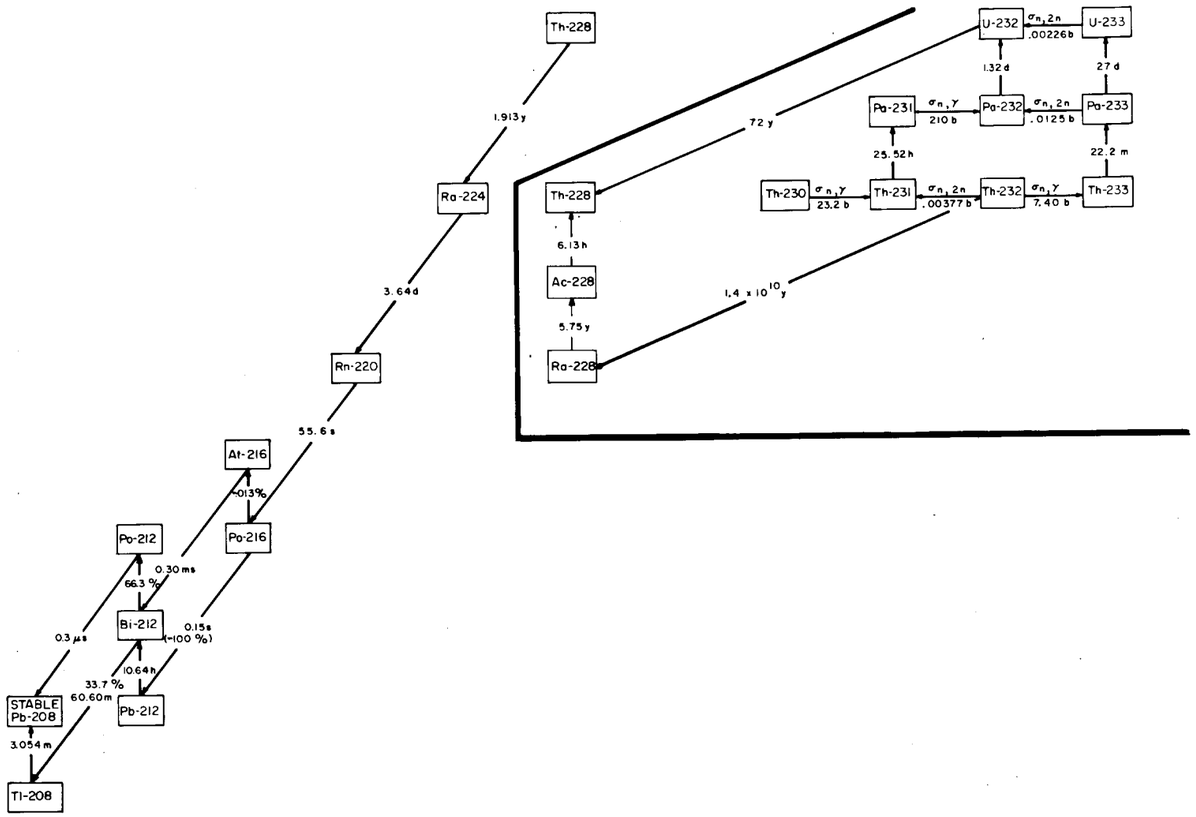

Fig. 4.4. Nuclear reactions and radioactive decay in the thorium-uranium cycle.

ORNL DWG. 75-16 R1

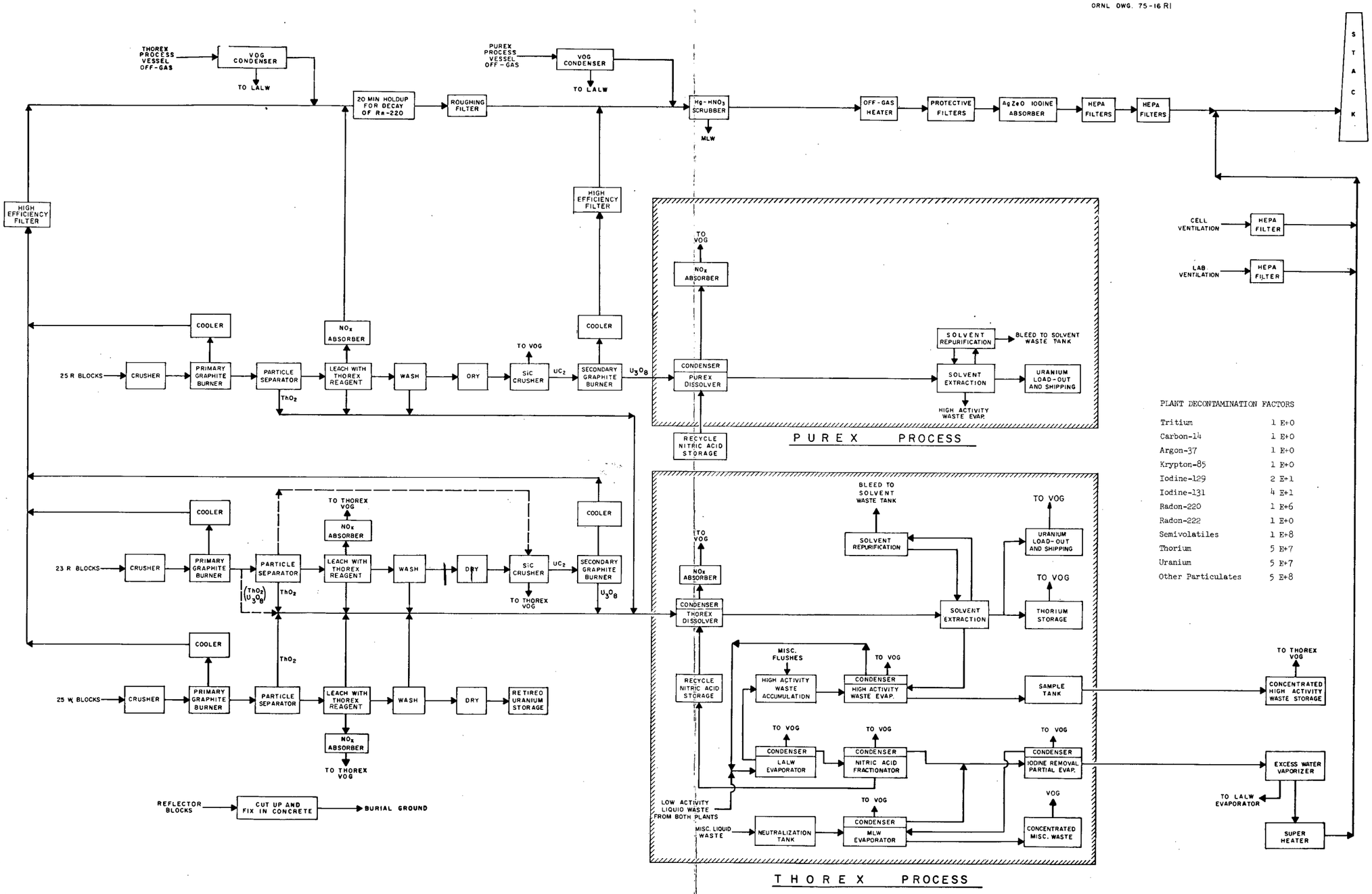

Fig. 4.5. Model fuel reprocessing plant: Case 1 - Base Case.

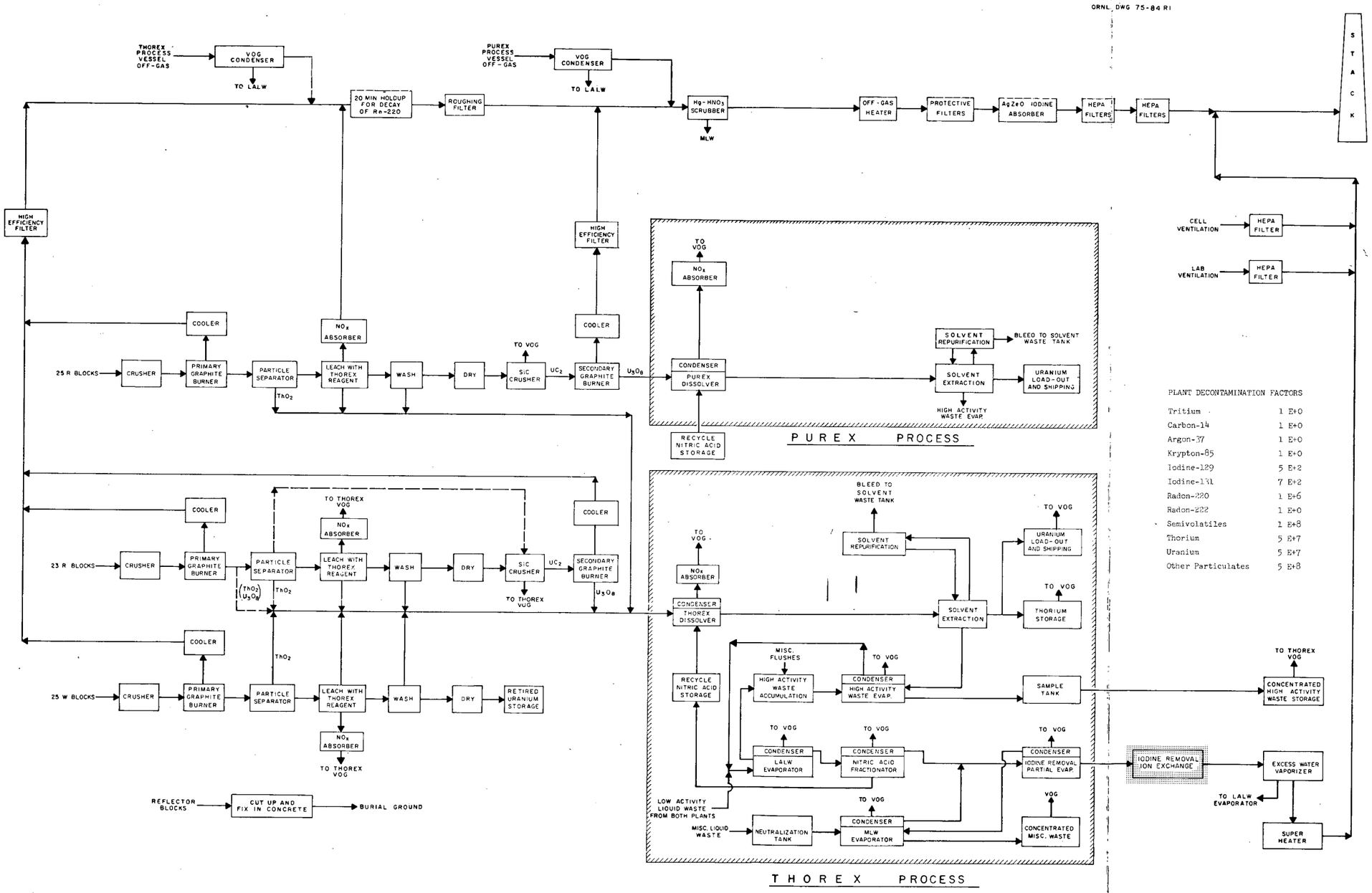

PLANT DECONTAMINATION FACTORS

Tritium	1 E+0
Carbon-14	1 E+0
Argon-37	1 E+0
Krypton-85	1 E+0
Iodine-129	5 E+2
Iodine-131	7 E+2
Radon-220	1 E+6
Radon-222	1 E+0
Semivolatiles	1 E+8
Thorium	5 E+7
Uranium	5 E+7
Other Particulates	5 E+8

Fig. 4.6. Model fuel reprocessing plant: Case 2a - Reduction in release of iodine in liquid effluent using ion exchange.

ORNL DWG. 75-17R2

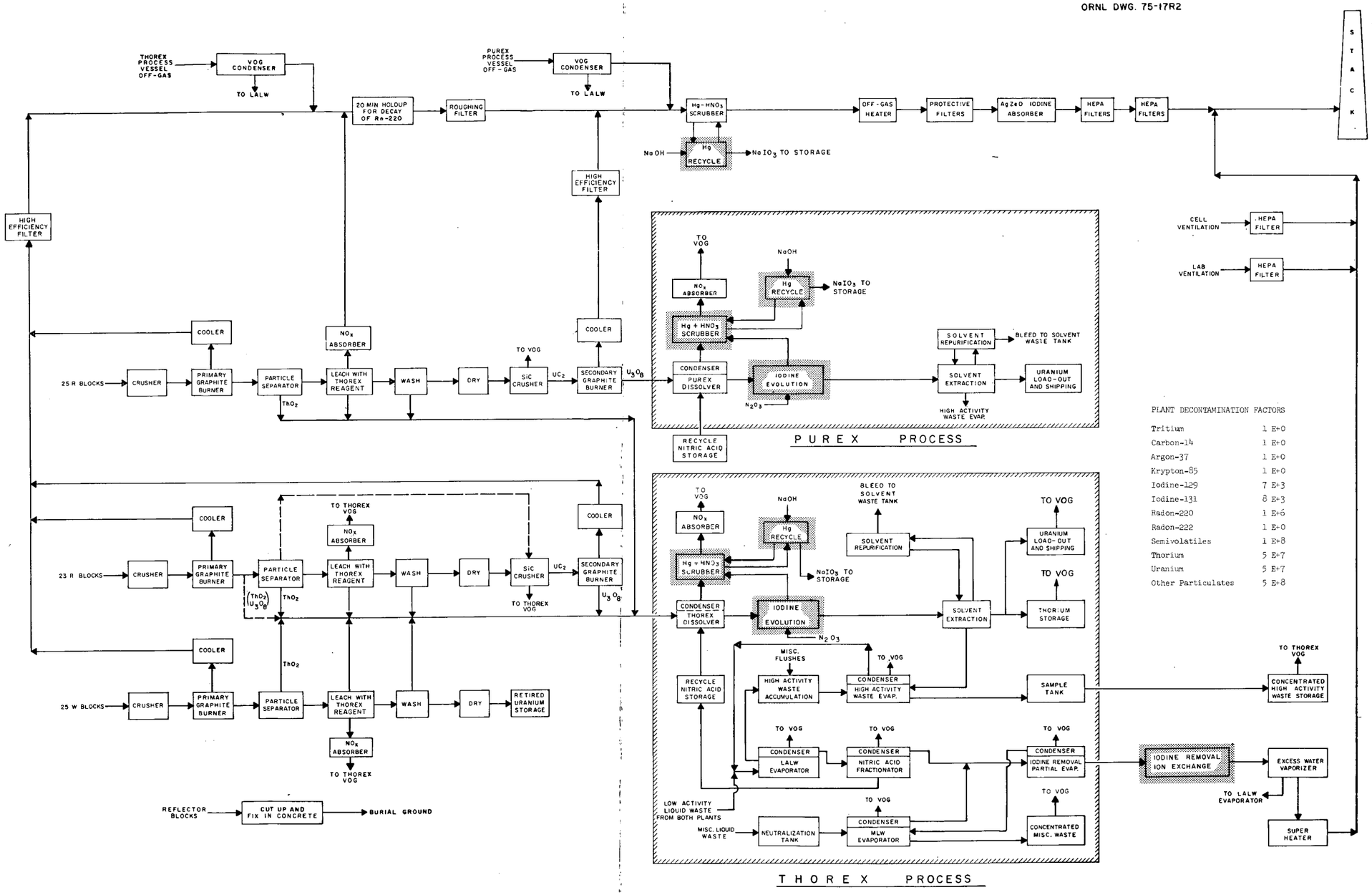

Fig. 4.7. Model fuel reprocessing plant: Case 2b - Reduction in release of iodine in liquid and gasborne effluents using iodine evolution, two $Hg(NO_3)_2$ scrubbers, and ion exchange.

ORNL DWG. 75-18R2

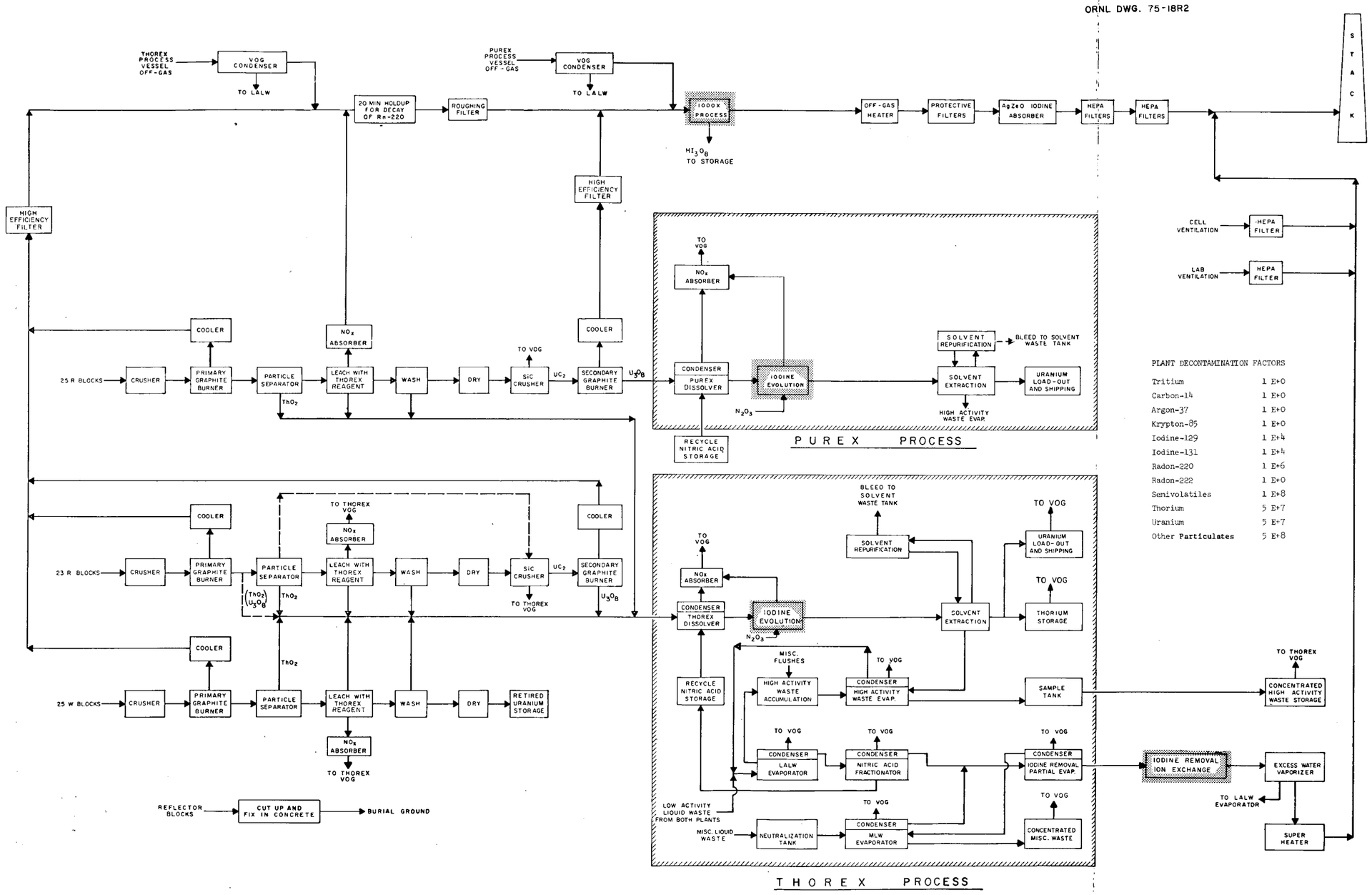

PLANT DECONTAMINATION FACTORS

Tritium	1 E+0
Carbon-14	1 E+0
Argon-37	1 E+0
Krypton-85	1 E+0
Iodine-129	1 E+4
Iodine-131	1 E+4
Radon-220	1 E+6
Radon-222	1 E+0
Semivolatiles	1 E+8
Thorium	5 E+7
Uranium	5 E+7
Other Particulates	5 E+8

Fig. 4.8. Model fuel reprocessing plant: Case 2c - Reduction in release of iodine in liquid and gasborne effluents using iodine evolution, the Iodox process, and ion exchange.

ORNL DWG. 75-19R2

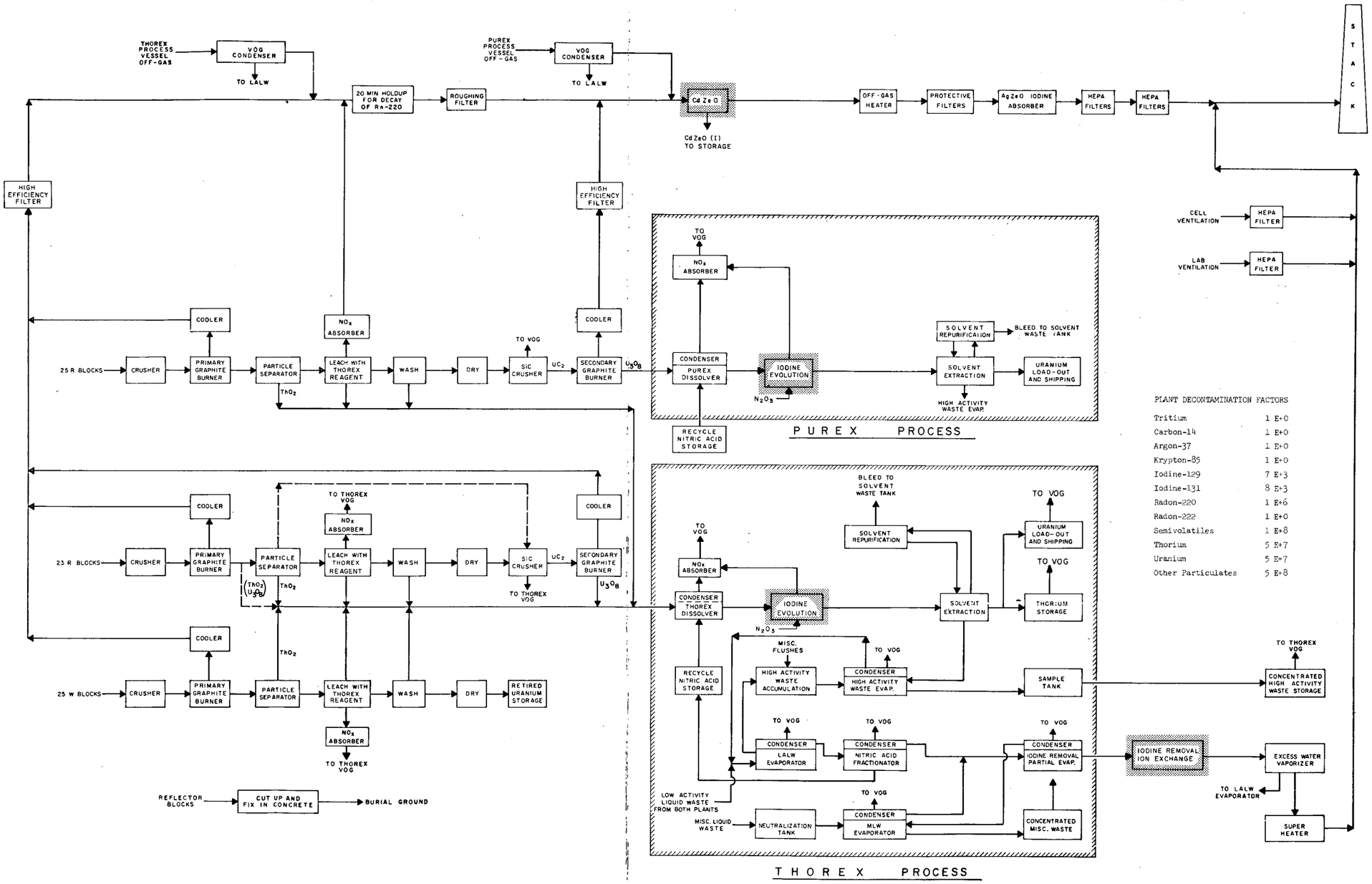

PLANT DECONTAMINATION FACTORS

Tritium	1 E+0
Carbon-14	1 E+0
Argon-37	1 E+0
Krypton-85	1 E+0
Iodine-129	7 E+3
Iodine-131	8 E+3
Radon-220	1 E+6
Radon-222	1 E+0
Semivolatiles	1 E+8
Thorium	5 E+7
Uranium	5 E+7
Other Particulates	5 E+8

Fig. 4.9. Model fuel reprocessing plant: Case 2d - Reduction in release of iodine in liquid and gasborne effluents using iodine evolution, cadmium zeolite sorbers, and ion exchange.

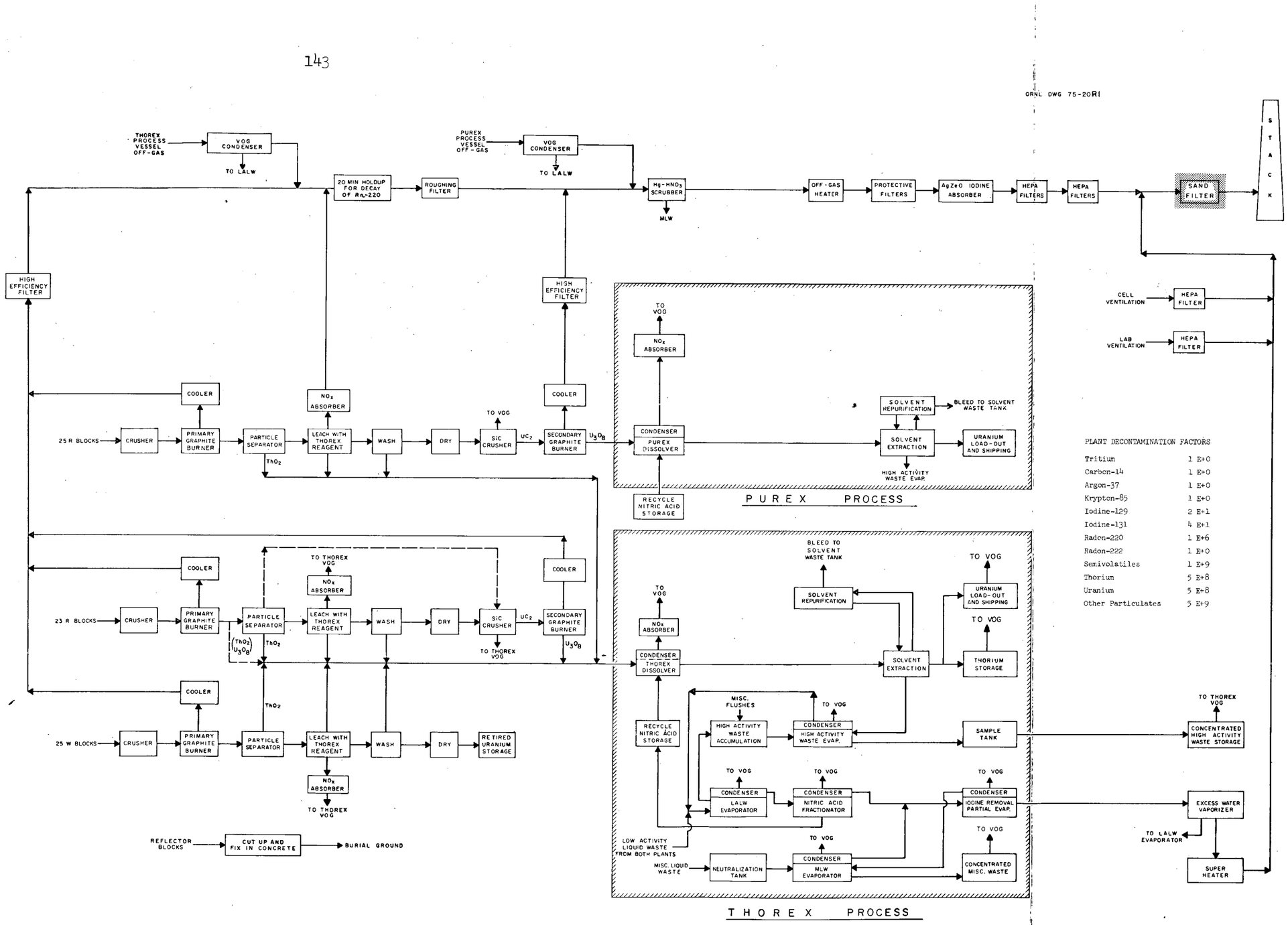

Fig. 4.10. Model fuel reprocessing plant: Case 3 - Reduction in release of particulates in gasborne effluents using a sand filter.

ORNL DWG 75-778R1

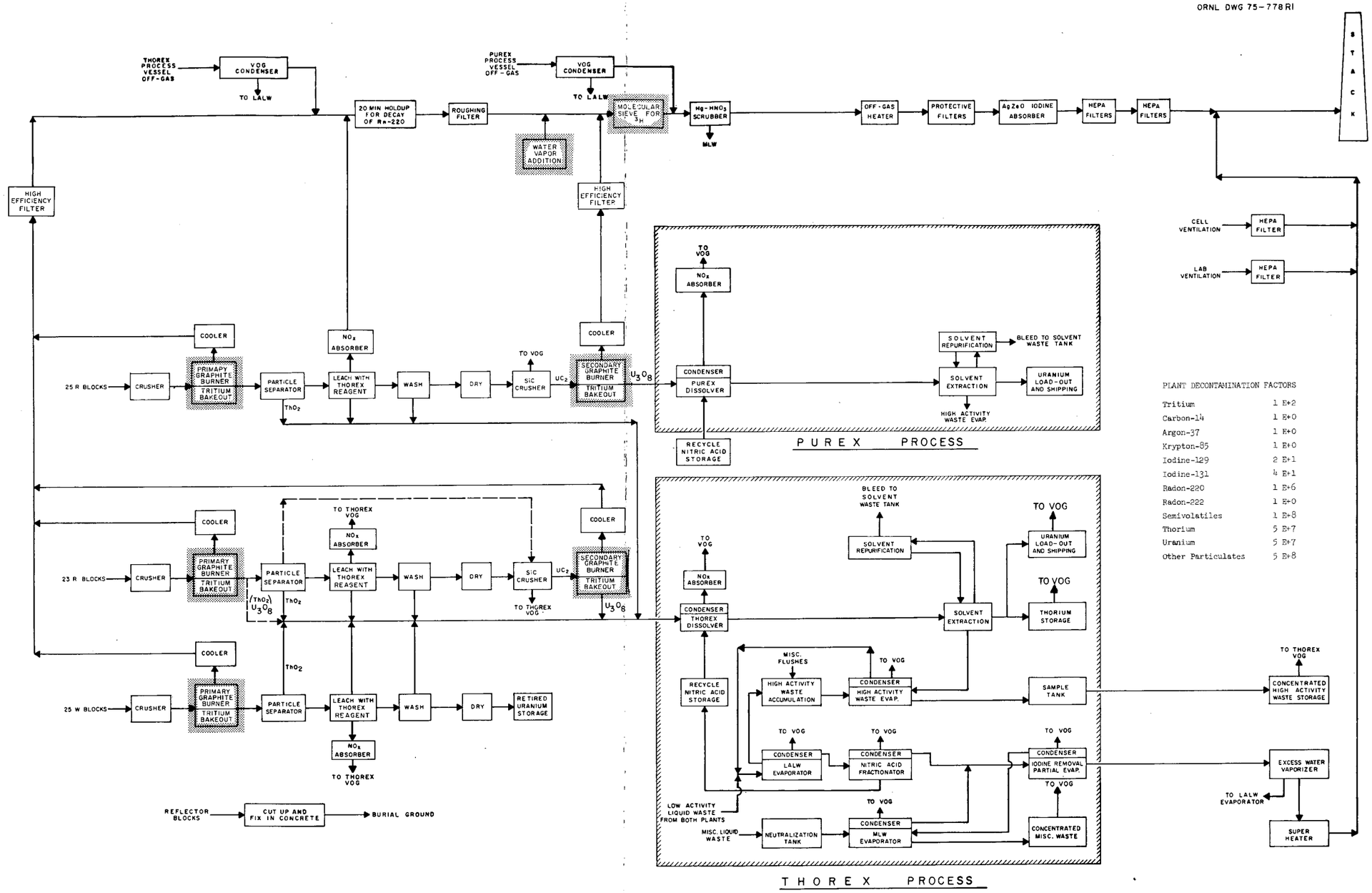

PLANT DECONTAMINATION FACTORS

Tritium	1 E+2
Carbon-14	1 E+0
Argon-37	1 E+0
Krypton-85	1 E+0
Iodine-129	2 E+1
Iodine-131	4 E+1
Radon-220	1 E+6
Radon-222	1 E+0
Semivolatiles	1 E+8
Thorium	5 E+7
Uranium	5 E+7
Other Particulates	5 E+8

Fig. 4.11. Model fuel reprocessing plant: Case 4 - Reduction in release of tritium in gasborne effluents using bakeout and molecular sieve.

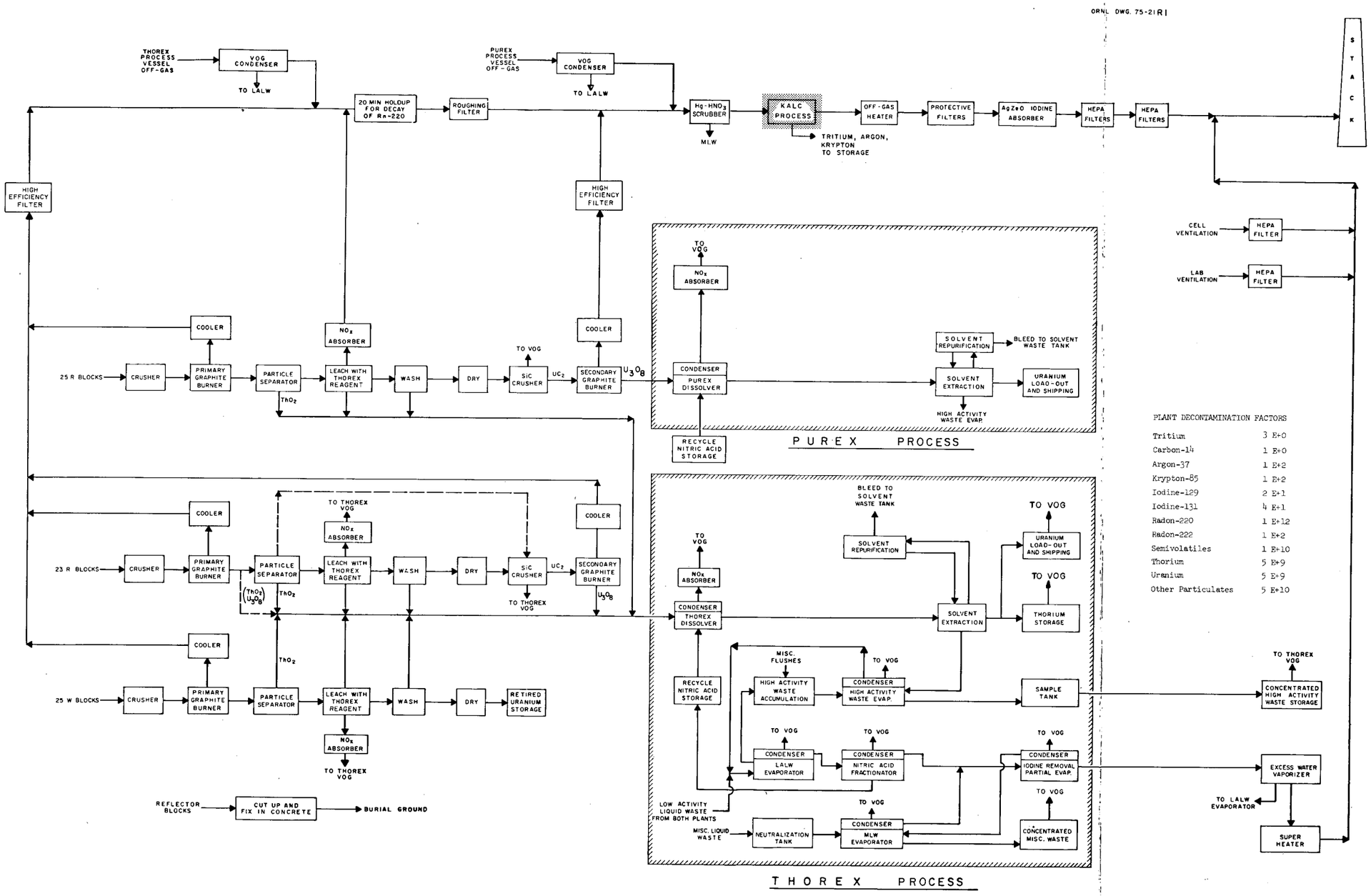

Fig. 4.12. Model fuel reprocessing plant: Case 5 - Reduction in release of noble gases and other components in gasborne effluents using KALC.

ORNL DWG 75-23R1

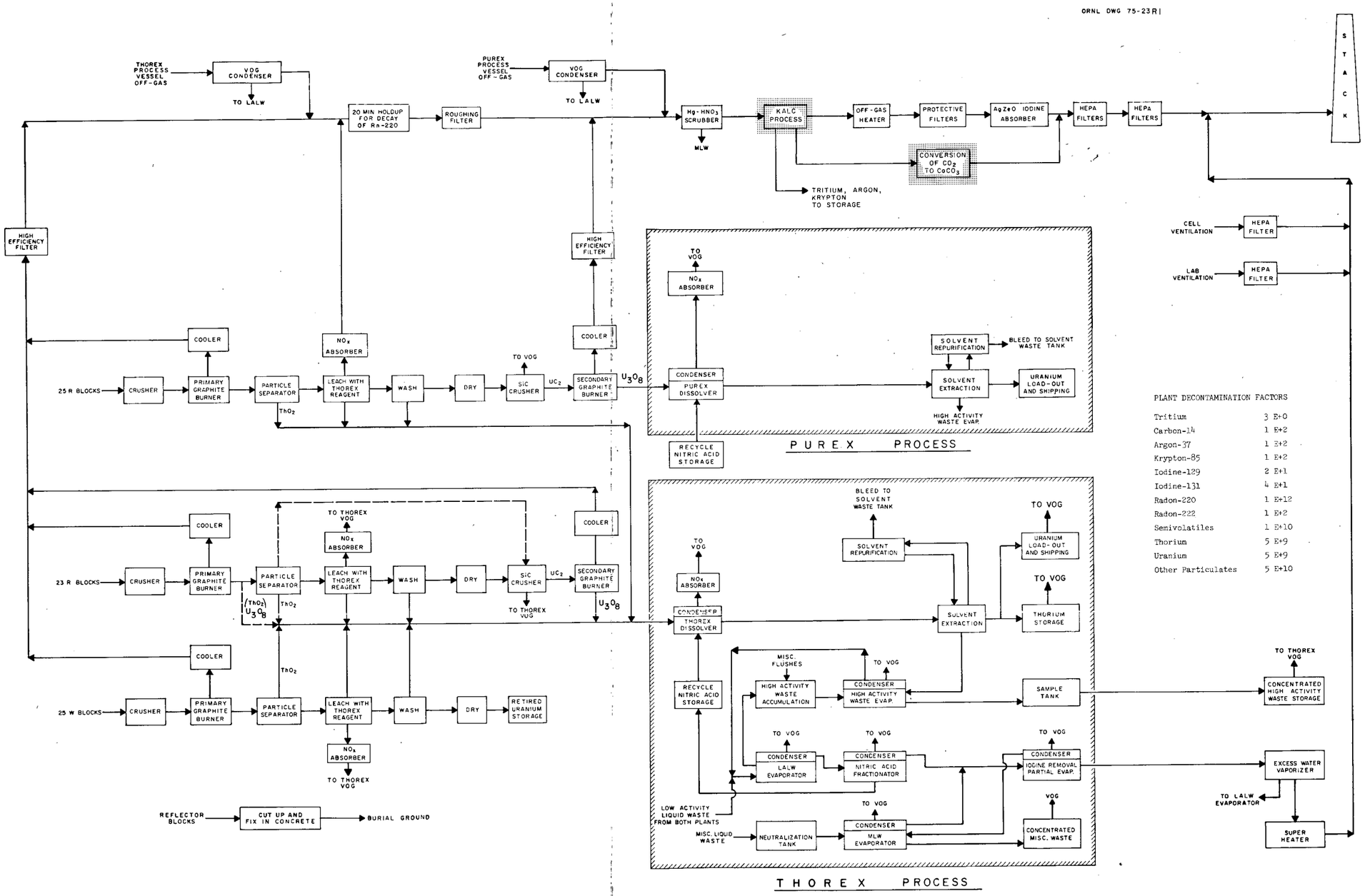

PLANT DECONTAMINATION FACTORS

Tritium	3 E+0
Carbon-14	1 E+2
Argon-37	1 E+2
Krypton-85	1 E+2
Iodine-129	2 E+1
Iodine-131	4 E+1
Radon-220	1 E+12
Radon-222	1 E+2
Semivolatiles	1 E+10
Thorium	5 E+9
Uranium	5 E+9
Other Particulates	5 E+10

Fig. 4.13. Model fuel reprocessing plant: Case 6 - Reduction in release of carbon-14 and other components in gasborne effluents using KALC and conversion of CO_2 to $CaCO_3$.

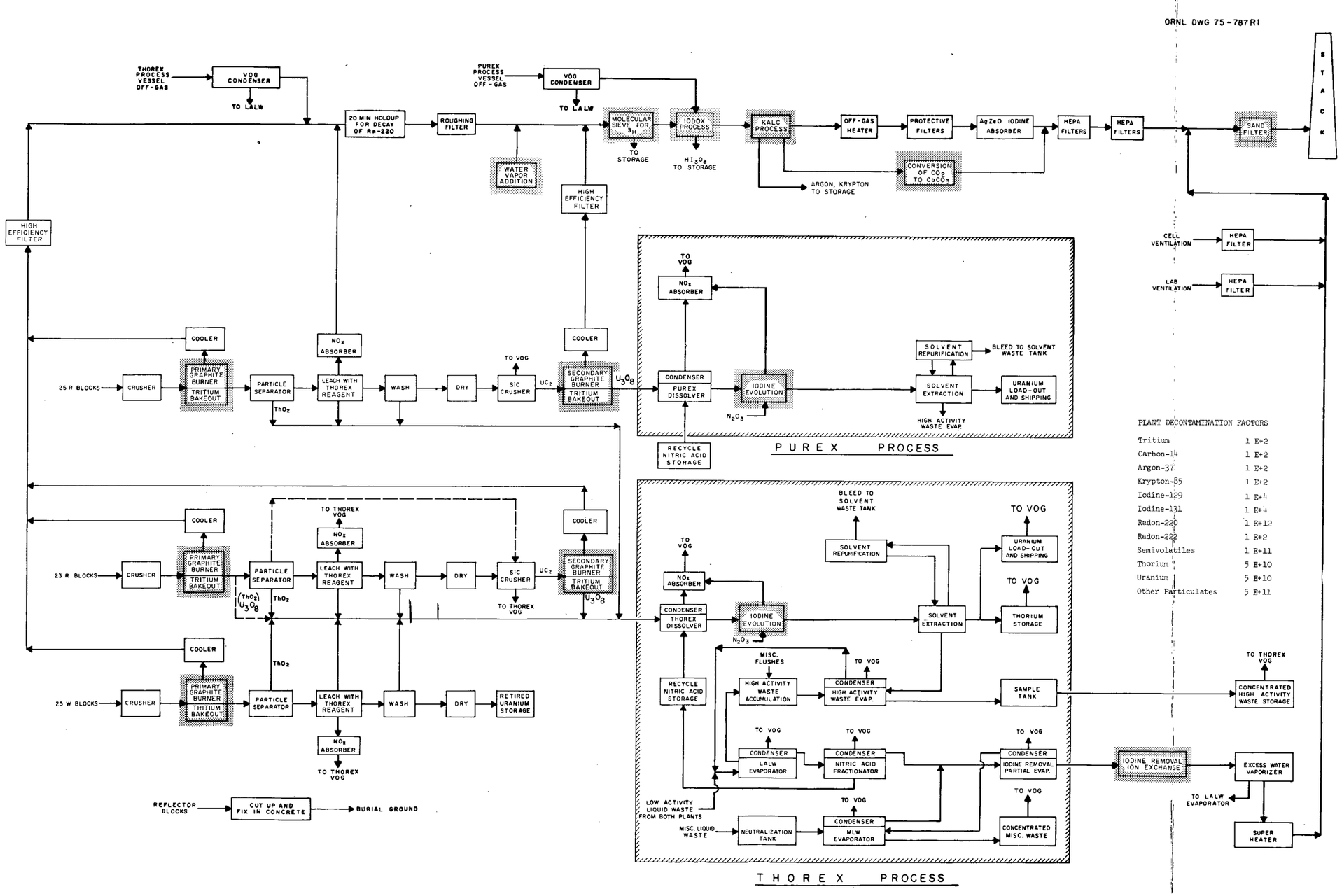

PLANT DECONTAMINATION FACTORS

Tritium	1 E+2
Carbon-14	1 E+2
Argon-37	1 E+2
Krypton-85	1 E+2
Iodine-129	1 E+4
Iodine-131	1 E+4
Radon-220	1 E+12
Radon-222	1 E+2
Semivolatiles	1 E+11
Thorium	5 E+10
Uranium	5 E+10
Other Particulates	5 E+11

Fig. 4.14. Model fuel reprocessing plant: Case 7 - Reduction in all releases using a composite system.

ORNL DWG 75-8939 R2

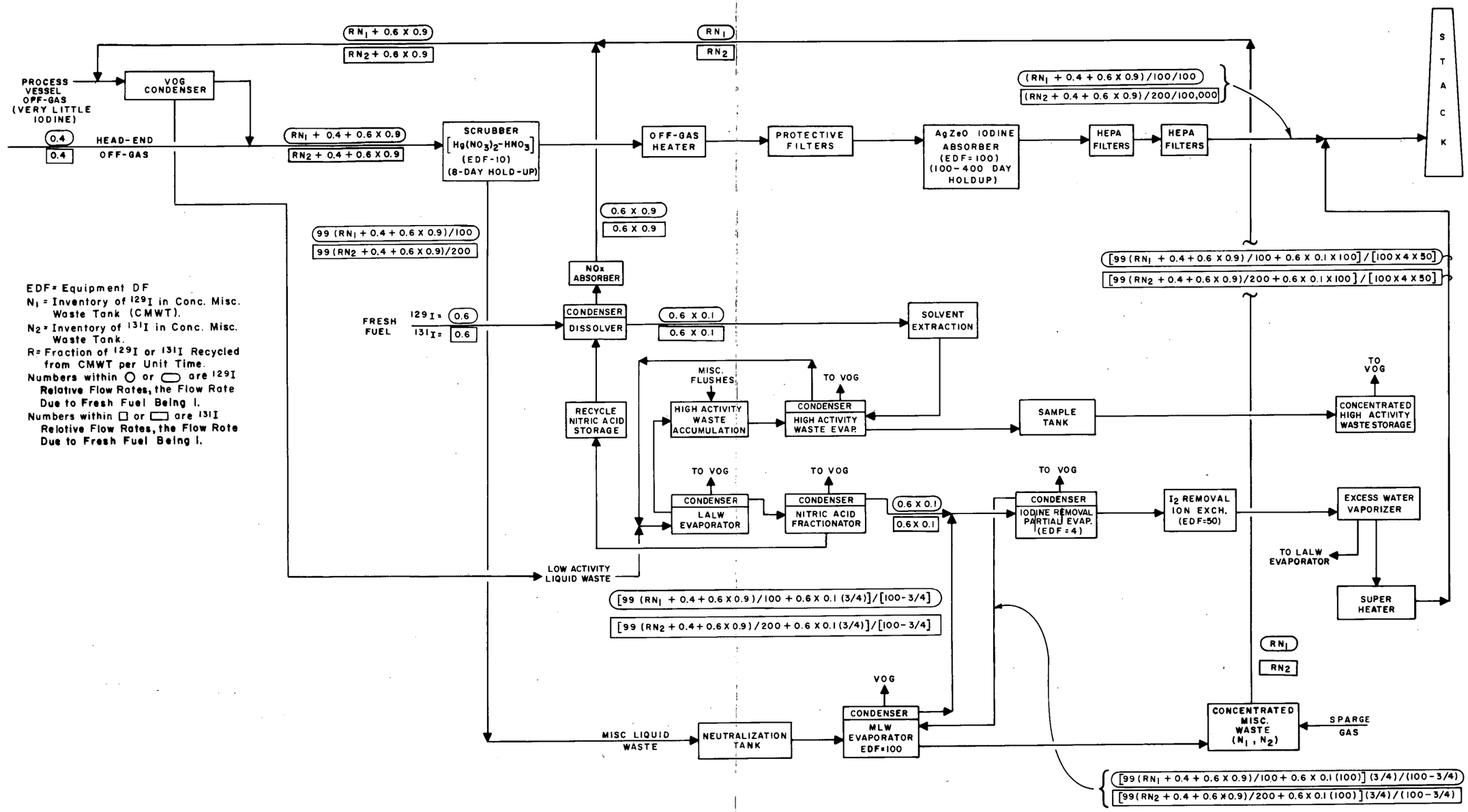

Fig. 4.15. Example of iodine sorption in off-gas treatment and liquid waste systems.

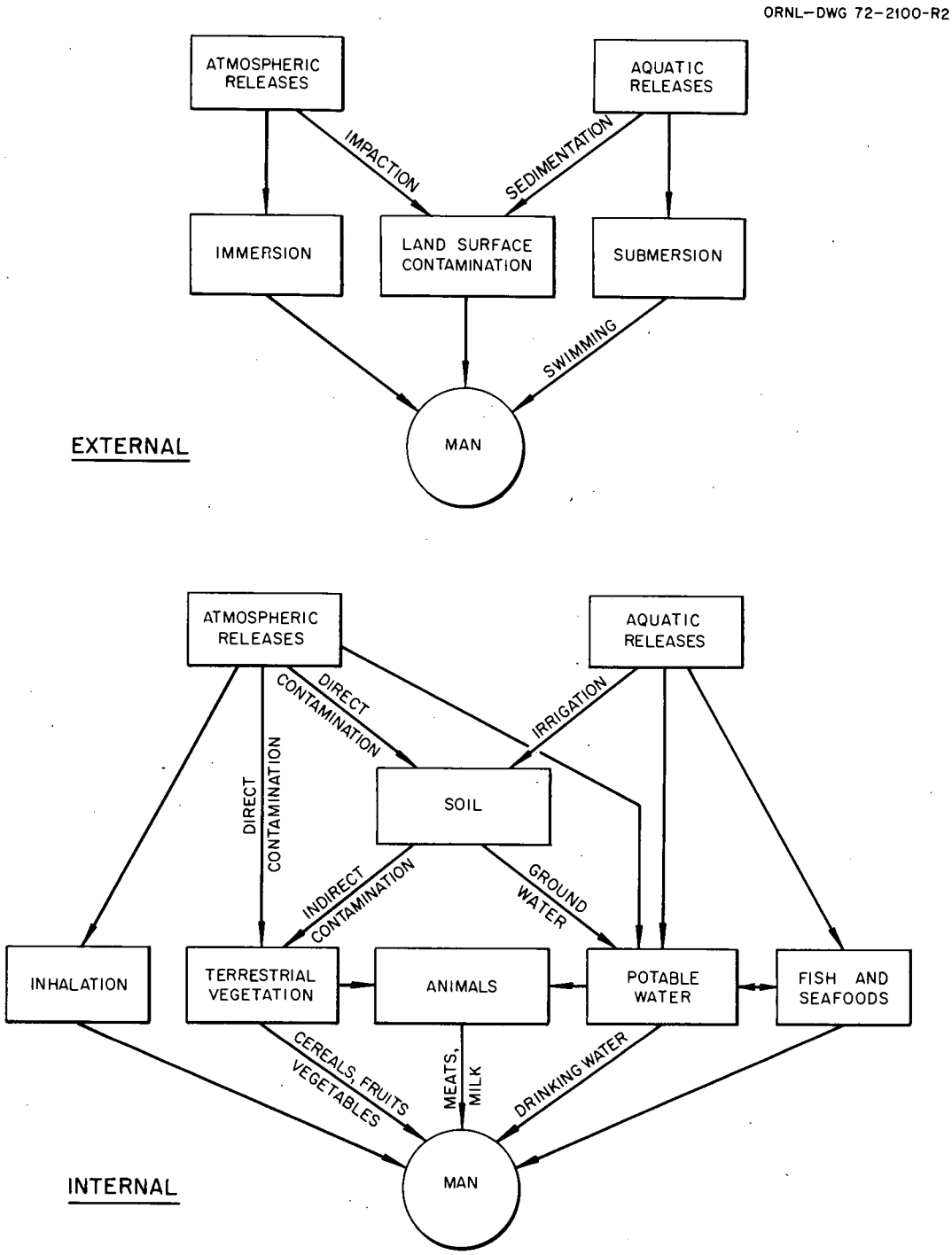

Fig. 7.1. Pathways for external and internal exposure of man.

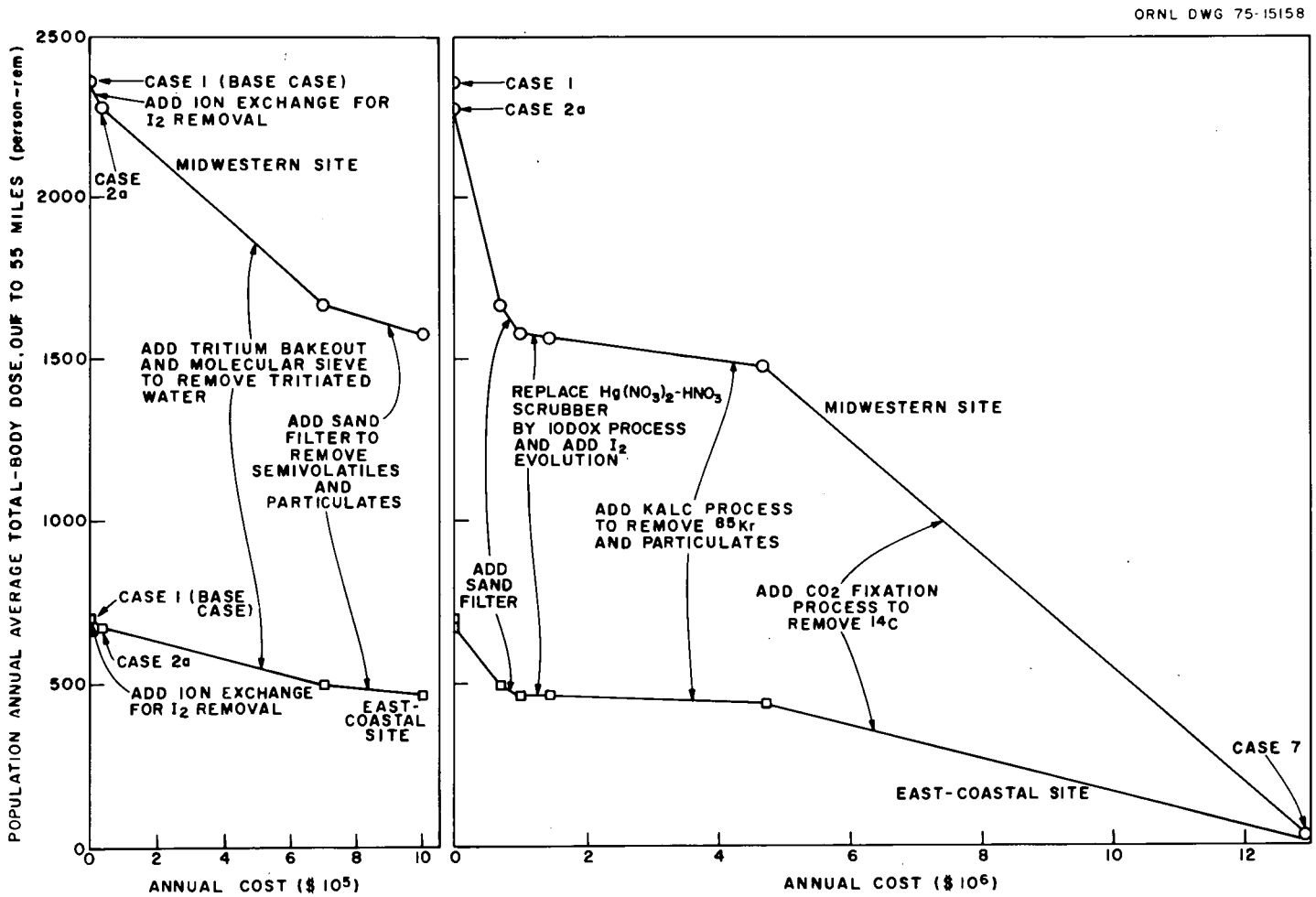

Fig. 8.1. Cumulative annual cost for reduction of total-body dose from the model HTGR fuel reprocessing plant.

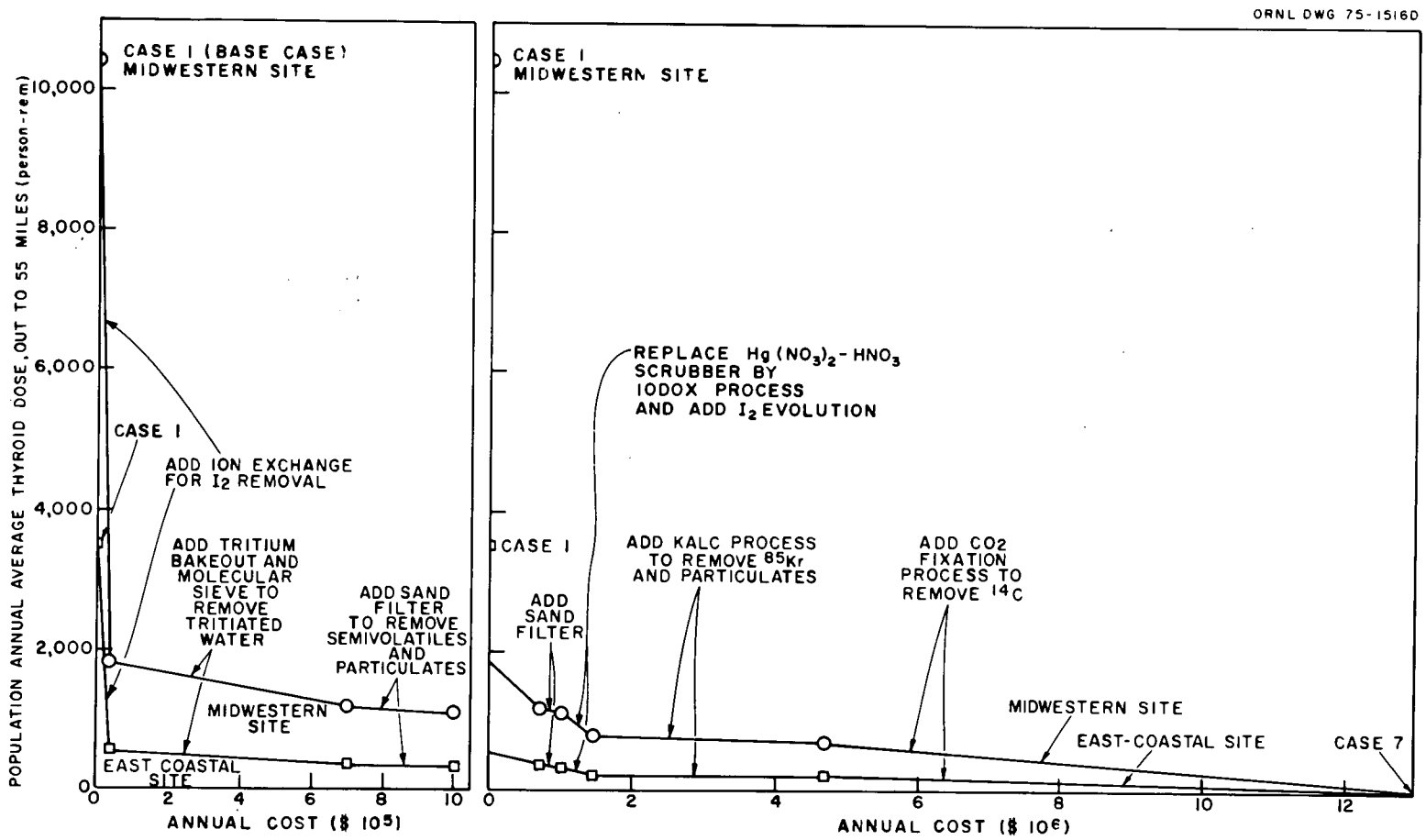

Fig. 8.2. Cumulative annual cost for reduction of thyroid dose from the model HTGR fuel reprocessing plant.

APPENDIX A. PREPARATION OF COST ESTIMATES

1.0 INTRODUCTION

This Appendix presents the details of the methods used to estimate the capital and annual costs of the installations required for treating the radwastes at the model HTGR fuel reprocessing plant. The details of the methods used for estimating the annual fixed charges, annual operating costs, total annual costs, and contribution to power costs are presented in Sect. 6.0 of the survey report. In summary, the capital cost is the sum of the direct cost (complete installation cost of the equipment including structure) and the indirect cost, and the annual cost is the sum of the annual fixed charge (26% of the capital cost) and the annual operating cost.

No attempt was made to perform a detailed analysis of each radwaste treatment case to estimate the annual operating and maintenance cost; however, since radwaste treatment is a part of a complete reprocessing plant, an annual operating cost of 40% of the annual fixed charge is used. This is in agreement with a previous fuel reprocessing cost estimate.[1] However, for the sand filter used in Cases 3 and 7, the annual operating and maintenance expense is estimated at 10% of the annual fixed charge, while in Case 2d the annual expense of replacing ($148,000) and drumming ($1000) the spent CdZeO and in Cases 6 and 7 the annual expense for lime ($584,000) and drumming the wet $CaCO_3$ filter cake ($5,380,000) are included as additional annual operating expenses. The cost of storing cylinders of gas or drums of solid waste on-site or shipping off-site for storage or burial is not included.

1.1 Capital Costs

The capital cost of the waste treatment cases is the sum of the direct and indirect costs. The methods used for estimating the direct and indirect costs are presented in the following sections.

1.1.1 *Direct Costs*

The initial cost of the equipment for the various radwaste treatment case studies was determined, and appropriate costs based on experience in the nuclear industry were then added to the initial cost to allow for (1) installation of the components, including piping, instrumentation, and controls; (2) modifications to provide for remote maintenance; and (3) fabrication upgrading (where necessary) to provide the required quality assurance. Equipment costs were transferred to the appropriate case study, and the necessary adjustments were made for piping, instrumentation, and installation costs. It is assumed that the equipment is installed in the remote cells by the remote crane to ensure that the equipment could be removed after operations are initiated. Thus, all piping, instrument lines, etc., must be prefabricated to exacting tolerances. Equipment and piping are installed in contact maintenance cells by labor operating within the cell. Some increases in installation and piping costs are made to cover these types of installation.

Cell space requirements for each case are determined by estimating the space required for major pieces of equipment and the requirements for auxiliary equipment, i.e., pumps, condensers, etc. This amount of space is then considered to be an addition to the length of cell that is required in the base case. The specifications assumed for the cell in the base case are: (1) cells are 25 feet wide, (2) remote maintenance cells are 60 feet high, (3) contact maintenance cells are 30 feet high, and (4) cells are lined with stainless steel. Operating, maintenance, and crane bay areas (contact maintenance cells) that are adjacent to external cell walls are lengthened in proportion to the increase in length of the cell. The length of remote and direct crane rails is also increased proportionally to service the additional equipment. For both remote and contact maintenance cells, additional pipe sleeves are cast into the concrete walls. The pipe sleeves in the remote maintenance cells are accurately positioned to ensure that piping and instrument jumpers from cell walls to the equipment can be placed by remote cranes and operated through the use of television cameras or through shielded windows. The cost estimates for the cells are based on Class I construction. Based on these considerations, cell costs of \$35 and \$25 per ft^3 of internal cell volume are estimated for remote and contact maintenance cells, respectively. The sand filter for Case 3 is housed in a concrete shell outside the plant building and, thus, does not require cell space. The equipment for the conversion of CO_2 to $CaCO_3$ (Cases 6 and 7) is housed in a conventional chemical plant structure. The cost of a warehouse and other related facilities is not included in the costs. The total direct cost for each radwaste treatment case is the complete, installed, equipment cost (material and labor), including the structure.

All costs are based on new construction costs where all of the equipment that is added for each case study is included in an integrated plant. Backfitting costs for existing plants are not considered. Backfitting costs for the installation of equipment for retaining krypton and tritium have been prepared by Nuclear Fuel Services[2] and Gulf-General Nuclear Services.[3] The costs for the various radwaste treatment methods used in this study are presented in Table A-1 and the costs for radwaste treatment Cases 2a through 7 are presented in Table A-2.

1.1.2 *Indirect Costs*

Indirect costs are estimated as follows:

	Percentage of Direct Cost
Engineering and supervision	15
Construction expense and contractor's fee	20
Engineering design (A-E)	19
Quality assurance[a]	6
Other owner's cost	10
Contingency	40
Interest during construction[b]	39
Total	149

[a]The purchase price of conventional chemical equipment does not reflect quality assurance costs anticipated for a nuclear fuel reprocessing plant being built in the near future. An additional cost of 6% of the direct costs has been assumed to reflect costs for more stringent quality assurance.

[b]Interest is applied to the cumulative total cost at a rate of 8% per year over a 5-year cash flow expenditure period.

The interest during construction and the contingency allowance are included as indirect cost to simplify the calculations.

1.1.3 *Method of Estimating Costs*

The methods used to estimate the direct cost (complete equipment installation cost including structure) are described for each radwaste treatment case. Selected equipment lists including purchase price and equipment flowsheets are presented in Tables A-3 through A-5 and Figs. A-3 through A-5.

Radwaste Treatment Case 2a. – Case 2a consists of installing either an ion exchange or macroreticular resin column downstream of the Iodine Removal Partial Evaporator (Fig. 4.6). The cost of a 20-gpm 12-ft^3 demineralizer was used from WASH-1258,[4] Volume 2, "Analytical Models and Calculations," page D-75: equipment \$6700, labor \$2000, material \$1300 for a total installed cost of \$10,000. A shielded, contact maintenance cell, 30 feet high, is estimated to cost \$25/ft^3 or \$27,000 for a 6-ft by 6-ft area. The total installed cost (direct cost) of the ion exchange column including structure is \$37,000. Cost of the resin (\$100/ft^3) is included as an operating expense.

Radwaste Treatment Case 2b. – Iodine evolution, mercury recycle, and a dissolver off-gas $Hg(NO_3)_2$-HNO_3 scrubber are added to the base plant in addition to the Case 2a ion exchange column (Figs. A-1 and A-2).

It is assumed that the same type of iodine evolution equipment will be used in the HTGR model reprocessing plant as that costed by Burns and Roe for the LWR model fuel reprocessing plant.[5] The direct cost for the HTGR fuel reprocessing plant equipment was estimated using a scaling factor of $[(3.5 \text{ liters/min})/(15 \text{ liters/min})]^{0.6}$, or 0.42, for the Thorex dissolver iodine evolution equipment and $[(1 \text{ liter/min})/(3.5 \text{ liters/min})]^{0.6}$, or 0.47, for the Purex dissolver iodine evolution equipment. An equipment list including estimated purchase price is presented in Table A-1 and a typical equipment flowsheet in Fig. A-1. The purchase price for the iodine evolution equipment is \$19,600.

It is estimated that the iodine released to the off-gas and the off-gas flow rate are approximately the same as that for the LWR model reprocessing plant and therefore the same equipment as that sized and costed by Burns and Roe for the LWR reprocessing plant[5] will be used. An equipment list including purchase price is presented in Table A-3, and equipment flowsheets in Figs. A-1 and A-2.

A field installation factor of 1.25 was used to determine the direct cost (complete installation cost) of the iodine evolution and mercury recycle equipment.

It is assumed that one $Hg(NO_3)_2$-HNO_3 scrubber will handle the combined off-gas (~15 cfm) from the Thorex and Purex dissolver. The estimated direct cost of the scrubber, including two centrifugal pumps, is \$1921.

The direct costs are \$163,700 for equipment, \$269,000 for contact maintenance cell, and \$52,000 for remote cell, resulting in a total direct cost of \$458,000 including structure.

Radwaste Treatment Case 2c. – The waste treatment systems for Case 2c are iodine evolution, replacing the Case 1 $Hg(NO_3)_2$-HNO_3 scrubber in the vessel off-gas system with the Iodox process, and the ion exchange column in the liquid system.

The direct cost for the iodine evolution equipment is the same as that for Case 2b, namely, \$98,000 for equipment and \$52,000 for a remote cell structure (~1500 ft^3 at \$35/ft^3).

The Case 1 $Hg(NO_3)_2$-HNO_3 scrubber is replaced by the Iodox process (Fig. A-3) and consequently, a direct cost credit is taken for the scrubber. The purchase price (\$34,500) of the

scrubber (5.5 ft diam x 28 ft high, 17 ft of packing) was determined using graphs and cost information presented in refs. 6 and 7. A field installation factor of 1.76 was used to give an equipment direct cost of $107,000. A contact maintenance cell volume of about 2356 ft^3 at $25/$ft^3$ is required. The total direct cost for the scrubber (equipment plus structure) is $166,000.

In the LWR fuel reprocessing ALARA study,[5] the Iodox scrubber is in the dissolver off-gas system (500 ft^3/min) and it was assumed that the equipment would be in a remote cell. The Case 1 $Hg(NO_3)_2$-HNO_3 scrubber for the HTGR fuel reprocessing ALARA study is in the vessel off-gas (2000 ft^3/min) and in a contact maintenance cell. It is assumed that the replacement Iodox scrubber would be in the same location. The size of the Iodox scrubber was estimated by the ratio of diameters squared to off-gas flow rates. The new cost of the Iodox equipment was determined using a scaling factor of the ratio of scrubber diameter (7 ft/3.5 ft) to the 0.6 power. The scaling factor used is 1.52. It is estimated that twice the cell floor area is required for the new system, but since the cell heights used in the ALAP studies are 60 ft for a remote cell and 30 ft for a contact, the cell volumes are the same for both systems. The direct cost for the Iodox equipment is $223,506 and for the contact maintenance cell (364 ft^2 x 30 ft x $25/$ft^3$) is $273,000.

The direct costs for the ion exchange column are the same as for Case 2a, $10,000 for equipment and $27,000 for structure.

The total direct cost for Case 2c (equipment and structure) is $684,000, and allowing a direct cost credit for the Case 1 $Hg(NO_3)_2$-HNO_3 scrubber of $166,000 results in an adjusted total direct cost of $518,000.

Radwaste Treatment Case 2d. – In Case 2d, the Case 1 $Hg(NO_3)_2$-HNO_3 scrubber is replaced with CdZeO absorbers and includes iodine evolution and ion exchange in the liquid waste system.

The CdZeO system (Fig. A-4) consists of two parallel absorbers (7 ft diam x 4 ft long), a fresh CdZeO supply hopper (3 ft diam x 9 ft high), and a spent CdZeO hopper of the same dimensions. The spent CdZeO is transferred from the absorbers to a spent CdZeO hopper by jetting and then packaged in cans for disposal.

The costs of the absorbers, hoppers, and jets were determined using appropriate information presented in refs. 6 and 7. The equipment cost is $28,000, and using a field installation factor of 2.9 results in an equipment direct cost of $108,300. It is estimated that the structure requirement is equivalent to a contact cell 126 ft^2 x 30 ft and at $25/$ft^3$ the structure direct cost is $94,500.

The initial charge of CdZeO in each absorber based on a bed 1 ft thick, bulk density of 64.78 lb/ft^3, and costing $6/lb will cost $29,900 and is considered to be a direct cost.

The total direct cost of the CdZeO system, including equipment purchase price, complete installation, structure, and initial charge of CdZeO, is $233,000. Allowing for a direct cost credit of $166,000 for the Case 1 $Hg(NO_3)_2$-HNO_3 scrubber, the adjusted direct cost of the CdZeO system is $67,000.

The volume of CdZeO in each absorber is equivalent to about 1.0 x 10^6 cm^3 and, based on a total iodine release of 1.2 kg/day to the off-gas and an iodine loading of 25 mg/cm^3, it is estimated that 10 charges of fresh CdZeO will be required each year. It is estimated, at a price of $6/lb, that the annual expense for CdZeO is $148,000, which is considered an annual operating expense in addition to the annual operating cost equivalent to 40% of the annual fixed charges.

The spent CdZeO is packaged in cans (2 ft diam x 10 ft high, 90% filled) costing $80 as described by Perona and Blomeke,[8] for disposal. It is estimated that 382 ft^3/yr of spent CdZeO will be contained in 14 cans at an annual expense of $1120/yr. The cost of the cans is

considered as an additional annual operating cost, but the cost of incorporating the solids into cement, on-site storage or burial, or shipping off-site for storage or burial, is not included.

Radwaste Treatment Case 3. – In Case 3, a sand filter is added in series with the two HEPA filters (Fig. 4.10). The off-gas will pass upward through the sand filter (39-in.-high sand bed), which is nearly equivalent to an additional HEPA. This provides for a third stage of filtration for process off-gases as well as a second stage of filtration for the cell and laboratory ventilation air.

It is estimated that the combined off-gas flow rate through the sand filter is about 60,000 cfm, which is equivalent to the model LWR reprocessing plant (ALARA)[5] flow rate; consequently, the costs developed by Burns and Roe (Table A-3 and Fig. A-5) for the model LWR fuel reprocessing plant will be used for the model HTGR fuel reprocessing plant.

A summary of the Case 3, sand filter, direct costs is as follows: process equipment - \$20,200; sand filter (material) - \$209,900; install equipment - \$1100; install sand filter - \$165,400; piping (material and labor) - \$20,800; and instruments and controls - \$8000. The total direct cost for the sand filter is \$425,400. The annual operating cost for the sand is assessed at 10% of the annual fixed charge rather than the 40% that is used for the other radwaste treatment cases.

Radwaste Treatment Case 4. – Case 4 is concerned with the retention of tritium (Fig. 4.11) as tritiated water; this is achieved by baking tritium out of all burner residues and passing the off-gases through molecular sieve sorbent.

The purchase cost of a regenerative molecular sieve sorbent system was determined by scaling the LWR reprocessing (ALARA)[5] drier package costed by Burns and Roe. The scaling factor used was the ratio of off-gases flow rates to the 0.6 power. The purchase cost of the drier package so determined is \$114,900, and estimating the installation cost for the drier package to be 30% of the purchase cost results in a direct cost for the drier package of \$149,000.

The size of the drier package is scaled based on off-gas flow rates, and it is estimated that an area 20 ft x 16 ft of a contact maintenance cell 30 ft high is required, and based on a cost of \$25/ft^3, the structure cost is \$240,000.

It is assumed that a batch tritium bake-out will be used as shown in Fig. A-6. The equipment consists of five electrically heated furnaces with two cans for each furnace so that the various fuel types will not be mixed.

The costs of the furnaces and cans are an extrapolation of costs developed at ORNL for high-level waste pot calcination studies.[9] It is estimated that the direct cost of the furnace and cans is \$103,900. The equipment will be installed in a remote cell, and the estimated structure cost is \$231,000 based on a 220-ft^2 area of a remote cell 30 ft high costing \$35/ft^3.

The total direct cost for Case 4 (equipment and structure) is \$731,800, which also includes \$42,000 for a tritiated water load-out station. The cost of on-site storage or burial or shipping off-site for storage or burial is not included.

Radwaste Treatment Case 5. – In Case 5, the KALC process is added to the base plant (Case 1) for the retention of ^{85}Kr. There is a great similarity between the KALC process and the fluorocarbon (selective absorption) process used in the LWR fuel reprocessing ALARA study. KALC probably requires more complete off-gas pretreatment and more complex refrigeration, whereas the fluorocarbon absorption system requires a complex solvent recovery system. It is assumed that for a conceptual cost estimate, the costs of the two systems are similar and, consequently, the costs of the KALC process were determined by scaling the LWR fuel reprocessing ALARA study fluorocarbon process costs.[5] The scaling factor used is the ratio of off-gas flow rates (2000/500) raised to the 0.6 power. The direct cost of the KALC

process equipment (complete installation) is $2,327,000, and it is estimated that the structure direct cost is $1,245,000, resulting in a total direct cost (equipment + structure) of $3,572,000. The costs include a bottling station for packaging the ^{85}Kr in cylinders, but the annual cost of on-site storage or burial, or shipping off-site for storage or burial, is not included. It is assumed that the cost of the cylinders is included in the normal annual operating cost (0.4 x annual fixed charge).

Radwaste Treatment Case 6. – In Case 6, the KALC process is used and the CO_2 is converted to $CaCO_3$ for the retention of ^{14}C. The method for estimating the KALC process costs has been described previously (radwaste treatment Case 5). It is assumed that the double alkaline process will be used (Fig. A-7). The CO_2 is converted to Na_2CO_3 in packed columns using NaOH, and the Na_2CO_3 is converted to $CaCO_3$ in mixing tanks using lime. The product is a wet filter cake consisting of about 60 wt % solids. The volume of wet filter cake produced is 6343 ft^3/day based on the following assumptions:

CO_2 flow rate	2.51 lb-mole/min
Lime reactivity	90%
Wet filter cake	60 wt % solids
Filter cake bulk density	102 lb/ft^3

The size of the packed towers was determined by the method presented in refs. 10 and 11. The cost of the chemical process equipment was determined using appropriate graphs and cost information contained in refs. 6, 7, and 12. A field installation factor of 3.5 (complete material and labor) was used which agrees with the value used by Ross and Associates.[13] The direct cost of the equipment is $1,293,000.

It is assumed that the conversion of CO_2 to $CaCO_3$ is a "cold" operation and that the process equipment will be contained within a conventional chemical plant structure. It is estimated that a structure of 20,000 ft^2 is required. The direct cost of the structure is $964,000 which was determined using building cost information presented in refs. 6 and 7. The total direct cost (equipment and structure) for the conversion of CO_2 to $CaCO_3$ is $2,257,000.

The normal annual operating and maintenance cost ($584,000) is estimated at 40% of the annual fixed charge. The annual cost ($843,000) of the lime is based on a daily requirement (300 days/yr) of 112.4 tons and a purchase price of $25/ton. It is assumed that the wet filter cake will be encapsulated in cans (2 ft diam x 10 ft high) at the Perona and Blomeke[8] cost of $80/can and the cans will be 90% filled. The annual cost ($5,380,000) of the cans is based on a daily requirement (300 days/yr) of about 224 cans. The annual cost of incorporating the waste in cement, on-site storage or burial, or shipping off-site for storage or burial is not included.

Radwaste Treatment Case 7. – Case 7 (Fig. 4.14) is a composite case that is a combination of Cases 2c, 3, 4, and 6. The methods used to estimate the costs for the cases used in Case 7 have been presented previously, and a summary of the Case 7 costs is as follows: capital cost - $18,685,000; annual operating cost - $8,086,000; and total annual cost - $12,945,000.

1.2 References

1. Staff of the Oak Ridge National Laboratory, *Siting of Fuel Reprocessing Plants and Waste Management Facilities*, ORNL-4451 (July 1970).

2. E. D. North and R. L. Booth, *Fission Product Gas Retention Study Final Report*, ORNL-TM-4409 (August 1973).

3. E. W. Murbach, W. H. Carr, and J. H. Gray III, *Fission Product Gas Retention Process and Equipment Design Study*, ORNL-TM-4560 (May 1974).

4. *Numerical Guides for Design Objectives and Limiting Conditions for Operation to Meet the Criterion "As Low As Practicable" for Radioactive Material in Light-Water-Cooled Nuclear Power Reactor Effluents, Vol. 2, Analytical Models and Calculations*, WASH-1258 (July 1973).

5. B. C. Finney, R. E. Blanco, R. C. Dahlman, F. G. Kitts, and J. P. Witherspoon, *Correlation of Radioactive Waste Treatment Costs and the Environmental Impact of Waste Effluents in the Nuclear Fuel Cycle - Nuclear Fuel Reprocessing*, ORNL-TM-4901 (May 1975).

6. K. M. Guthrie, "Capital Cost Estimating," Chem. Eng., 114-42 (March 24, 1969).

7. K. M. Guthrie, *Process Plant Estimating, Evaluation and Control*, Craftsman Book Company of America, Solano Beach, Calif., 1974.

8. J. J. Perona and J. O. Blomeke, *A Parametric Study of Shipping Casks for Solid Radioactive Wastes*, ORNL-TM-3651 (February 1972).

9. J. J. Perona, R. L. Bradshaw, J. T. Roberts, and J. O. Blomeke, *Evaluation of Ultimate Disposal Methods for Liquid and Solid Radioactive Wastes - Part II. Conversion of Solids by Pot Calcination*, ORNL-3192 (September 1961).

10. Norman A. Spector and Barnett F. Dodge, "Removal of Carbon Dioxide from Atmospheric Air," Trans. AIChE *42*, 827 (1946).

11. John B. Tepe and Barnett F. Dodge, "Absorption of Carbon Dioxide by Sodium Hydroxide Solutions in a Packed Column," Trans. AIChE *39*, 255 (1943).

12. M. S. Peters and K. D. Timmerhaus, *Plant Design and Economics for Chemical Engineers*, 2nd edition, McGraw-Hill, New York, 1968.

13. A. D. Ryon and R. E. Blanco, *Correlation of Radioactive Waste Treatment Costs and the Environmental Impact of Waste Effluents in the Nuclear Fuel Cycle - Milling of Uranium Ores*, ORNL-TM-4903, Vol. 2 (May 1975).

Table A-1. Summary of costs (dollars) for the radwaste treatment processing methods for the retention of iodine, krypton-85, particulates, tritium, and carbon-14 that are used in the HTGR fuel reprocessing AIARA study

	$Hg(NO_3)_2$-HNO_3 scrubber (Case 1)	Ion exchange	Second $Hg(NO_3)_2$-HNO_3 scrubber plus Hg recycle	Iodine evolution	Iodox	CdZeO	KALC	Sand filter	Tritium bake-out	Molecular sieve	Conversion of CO_2 to $CaCO_3$
Direct Cost											
Installed equipment	107,000	10,000	55,700	98,000	224,000	138,000	2,327,000	425,400	260,800	149,000	1,293,000
Structure	59,000	27,000	115,000	179,000	273,000	95,000	1,245,000	a	471,000	240,000	964,000
Total	166,000	37,000	171,000	277,000	497,000	333,000	3,572,000	425,400	731,800	389,000	2,257,000
Indirect Cost											
1.49 x direct cost	247,000	55,000	255,000	413,000	741,000	496,000	5,322,000	634,000	1,090,000	580,000	3,363,000
Capital Cost											
Direct cost + indirect cost	413,000	92,000	426,000	690,000	1,238,000	829,000	8,894,000	1,059,000	1,822,000	969,000	5,620,000
Annual Fixed Charges											
0.26 x capital cost	107,000	24,000	111,000	179,000	322,000	216,000	2,312,000	275,000	474,000	252,000	1,461,000
Annual Operating and Maintenance											
0.40 x annual fixed charges	43,000	9,600	44,000	72,000	129,000	86,000	925,000	-	190,000	101,000	584,000
0.10 x annual fixed charges	-	-	-	-	-	-	-	27,500	-	-	-
Ion exchange resin	-	1,200	-	-	-	-	-	-	-	-	-
Drumming (cans)	-	-	-	-	-	1,000	-	-	-	-	5,380,000
Replacement CdZeO	-	-	-	-	-	148,000	-	-	-	-	-
Lime	-	-	-	-	-	-	-	-	-	-	843,000
Total	43,000	11,000	44,000	72,000	129,000	235,000	925,000	27,500	190,000	101,000	6,807,000
Total Annual Cost											
Annual fixed charge + annual O&M	150,000	35,000	155,000	251,000	451,000	451,000	3,237,000	303,000	664,000	353,000	8,268,000

[a] A structure is not required. The sand filter is housed in an external concrete shell.

Table A-2. Summary of costs (dollars) for the model HTGR reprocessing plant

Radwaste treatment Cases 2a-7

	Iodine control				Particulate control	Tritium control	Noble gas control	^{14}C and noble gas control	Composite best
	Case 2a	Case 2b	Case 2c	Case 2d	Case 3	Case 4	Case 5	Case 6	Case 7
	Ion exchange	Ion exchange, iodine evolution, mercury recycle, DOG $Hg(NO_3)_2$-HNO_3 scrubber	Ion exchange, iodine evolution, Iodox	Ion exchange, iodine evolution, CdZeO absorbers	Sand filter	Molecular sieve, tritium bake-out, tritium load-out	KALC	KALC, conversion of CO_2 to $CaCO_3$	Cases 2c, 3, 4, and 6
Direct Cost									
Installed equipment	10,000	163,700	332,000	246,000	425,400	261,000	2,327,000	3,572,000	4,590,000
Structure	27,000	321,000	352,000	174,000	c	471,000	1,245,000	2,257,000	3,080,000
Total	37,000	485,000	684,000	420,000	425,400	732,000	3,572,000	5,829,000	7,670,000
Indirect Cost									
1.49 x direct cost	55,000	723,000	1,019,000	626,000	634,000	1,091,000	5,321,000	8,685,000	11,428,000
Capital Cost									
Direct cost + indirect cost	92,000	1,208,000	1,290,000[a] (1,703,000)	632,000[b] (1,046,000)	1,059,000	1,823,000	8,893,000	14,514,000	18,686,000
Annual Fixed Charges									
0.26 x capital cost	24,000	314,000	336,000 (443,000)	164,000 (272,000)	275,000	474,000	2,312,000	3,774,000	4,859,000
Annual Operating and Maintenance									
0.40 x annual fixed charges	9,600	127,000	134,000	66,000	-	190,000	925,000	1,510,000	1,834,000
0.10 x annual fixed charges	-	-	(177,000)	(109,000)	27,500	-	-	-	27,500
Ion exchange resin	1,200	-	1,200	1,200	-	-	-	-	1,200
Drumming (cans)	-	-	-	1,100	-	-	-	5,380,000	5,380,000
Replacement CdZeO	-	-	-	148,000	-	-	-	-	-
Lime	-	-	-	-	-	-	-	843,000	843,000
Total	11,000	127,000	135,000 (178,000)	216,000 (259,000)	27,500	190,000	925,000	7,733,000	
Total Annual Cost									
Annual fixed charge + annual O&M	35,000	441,000	471,000 (621,000)	380,000 (531,000)	303,000	664,000	3,237,000	11,507,000	12,945,000

[a]The Iodox process replaces the primary off-gas $Hg(NO_3)_2$-HNO_3 scrubber (Case 1), and consequently a capital cost credit of $413,000 is allowed for the scrubber. The numbers in parentheses are the cost with no cost credit for the scrubber.

[b]Same as Case 2c except the Iodox process is replaced with a CdZeO absorber system, and consequently the same capital cost credit is taken for the Case 1 $Hg(NO_3)_2$-HNO_3 scrubber.

[c]The sand filter is housed in an external concrete shell.

Table A-3. Equipment list and cost for radwaste treatment Case 2a - ion exchange

Descriptive title	Number of items	Unit cost ($)	Total cost ($)
Ion exchange column	1	6700	6700
Resin	1	1200	1200
Total			7900

Table A-4. Equipment list and cost for radwaste treatment Case 2b - mercury recycle, iodine evolution, dissolver off-gas $Hg(NO_3)_2$-HNO_3 scrubber, and ion exchange

Descriptive title	Number of items	Unit cost ($)	Total cost ($)
Fractionator	1	5580	5,580
Fractionator condenser	1	590	590
Flash vaporizer reboiler	1	700	700
Decanters	2	990	1,980
Filtrate receiver	1	1790	1,790
Surge tank	1	1790	1,790
Filtrate pump	1	2330	2,330
Fractionator reboiler circulation pump	1	4740	4,740
Solution recycle pump	1	2020	2,020
Filter and SS support	1	650	650
Ejector	1	230	230
Solution makeup tank	1	720	720
Makeup tank mixer	1	320	320
Makeup solution pump	1	430	430
Stripper	1	5636	5,636
Stripper reboiler	1	2100	2,100
Stripper condenser	1	1974	1,974
Feed preheater	1	420	420
Deiodized solution pump	1	1974	1,974
Stripper	1	2648	2,648
Stripper reboiler	1	987	987
Stripper condenser	1	928	928
Feed preheater	1	420	420
Deiodized solution pump	1	928	928
KI solution tank	1	700	700
KI solution pump	1	350	350
H_2O_2 pump	1	460	460
Mixer	1	320	320
Packed tower	1	1221	1,221
Caustic pump	2	350	700
Ion exchange column	1	6700	6,700
Resin		1200	1,200
Total			53,536

Table A-5. Equipment list and cost for radwaste treatment Case 2c - Iodox, iodine evolution, and ion exchange

Descriptive title	Number of items	Unit cost ($)	Total cost ($)
Absorber	1	124,200	124,200
Evaporator No. 1	1	34,500	34,500
Evaporator condenser	1	4,600	4,600
Evaporator No. 2	1	2,090	2,090
Stripper	1	5,636	5,636
Stripper reboiler	1	2,100	2,100
Stripper condenser	1	1,974	1,974
Feed preheater	1	420	420
Deiodized solution pump	1	1,974	1,974
Stripper	1	2,648	2,648
Stripper reboiler	1	987	987
Stripper condenser	1	928	928
Feed preheater	1	420	420
Deiodized solution pump	1	928	928
KI solution tank	1	700	700
KI solution pump	1	350	350
H_2O_2 pump	1	460	460
Mixer	1	320	320
Ion exchange column	1	6,700	6,700
Resin	1	1,200	1,200
Total			193,135

Table A-6. Equipment list and cost for radwaste treatment Case 2d - CdZeO absorption, iodine evolution, and ion exchange

Descriptive title	Number of items	Unit cost ($)	Total cost ($)
CdZeO absorber	2	8,349	16,698
CdZeO hopper	2	9,331	18,662
Jets	2	1,000	2,000
CdZeO		29,928	29,928
Stripper	1	5,636	5,636
Stripper reboiler	1	2,100	2,100
Stripper condenser	1	1,974	1,974
Feed preheater	1	420	420
Deiodized solution pump	1	1,974	1,974
Stripper	1	2,648	2,648
Stripper reboiler	1	987	987
Stripper condenser	1	928	928
Feed preheater	1	420	420
Deiodized solution pump	1	928	928
KI solution tank	1	700	700
KI solution pump	1	350	350
H_2O_2 pump	1	460	460
Mixer	1	320	320
Ion exchange column	1	6,700	6,700
Resin		1,200	1,200
Total			95,033

Table A-7. Equipment and material list and cost for radwaste treatment Case 3 - sand filter

Descriptive title	Number of items	Unit cost ($)	Total cost ($)
Blower	1	20,200	20,200
	Sand filter		
Filter structure (I&M)	1	303,180	303,180
Gravel, 2" x 1"	500 T	13.60 + freight	11,915
Gravel, 1" x 1/2"	500 T	10.60 + freight	10,415
Gravel, 1/2" x 1/4"	500 T	8.60 + freight	9,415
Filter sand, 4 x 8 mesh	750 T	8.10 + freight	13,748
Filter sand, 8 x 20 mesh	500 T	7.85 + freight	9,040
Filter sand, 20 x 40 mesh	1000 T	7.35 + freight	17,580
Grand total (sand filter)			375,493

Bulk source of supply - sand and gravel: Cape May, New Jersey.

Freight is assumed at $10.23 per ton. Bulk freight an average distance from the source of supply and Aiken, S. C., and Joliet, Ill.

Table A-8. Equipment list and cost of radwaste treatment
Case 4 - tritium bake-out

Descriptive title	Number of items	Unit cost ($)	Total cost ($)
Molecular sieve drier package	1	114,900	114,900
Furnace No. 1	1	40,000	40,000
Furnace No. 2	1	4,000	4,000
Furnace No. 3	1	32,000	32,000
Furnace No. 4	1	3,600	3,600
Furnace No. 5	1	7,000	7,000
Can No. 1	2	4,000	8,000
Can No. 2	2	400	800
Can No. 3	2	3,200	6,400
Can No. 4	2	350	700
Can No. 5	2	700	1,400
Total			218,800

Table A-9. Equipment list and cost for radwaste treatment
Case 5 - KALC

Descriptive title	Number of items	Unit cost ($)	Total cost ($)
Complete equipment[a]			1,786,410

[a]The KALC cost is derived based on scaling the fluorocarbon absorption equipment cost used in the LWR fuel reprocessing AIARA study. Consequently, a detailed equipment list was not developed.

Table A-10. Equipment list and cost for radwaste treatment
Case 6 - conversion of CO_2 to $CaCO_3$ and KALC

Descriptive title	Number of items	Unit cost ($)	Total cost ($)
Packed towers	3	28,809	86,427
Pump, 150 gpm	8	1,472	11,776
Pump, 200 gpm	1	1,605	1,605
Thickener	1	134,867	134,867
Neutralization tank	3	16,548	49,645
Pneumatic lime unloader	1	20,000	20,000
Lime storage silo and gravimetric feeder	1	26,000	26,000
Ball mill and belt feeder	1	26,000	26,000
pH control equipment	1	8,000	8,000
Filter	1	16,688	16,688
Surge tank	1	7,492	7,492
Complete KALC equipment			1,786,410
Total			2,174,910

ORNL DWG 74-1345

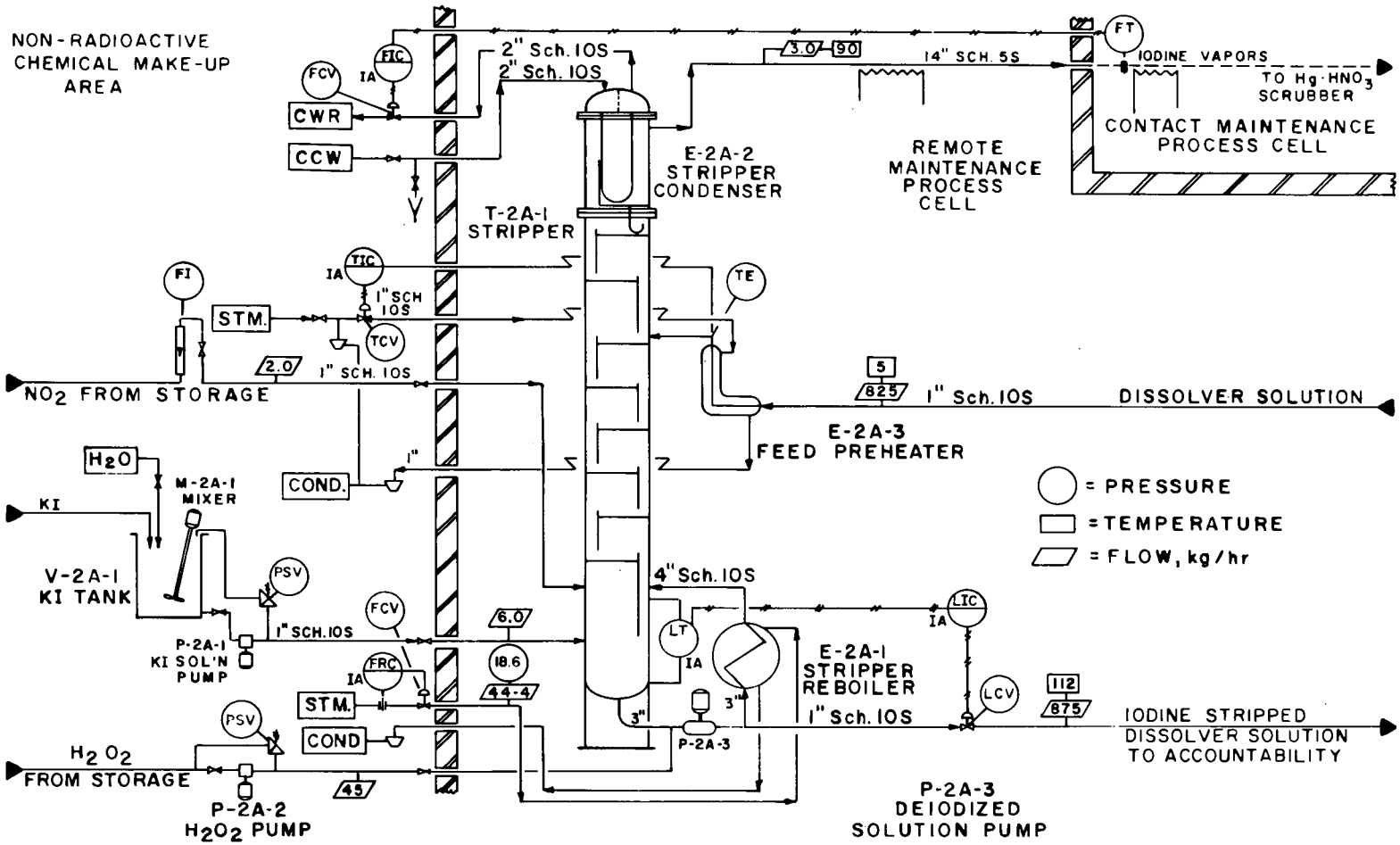

Fig. A-1. Equipment flowsheet for model HTGR nuclear fuel reprocessing plant radwaste treatment Cases 2b, 2c, 2d, and 7 - reduction in release of iodine - iodine evolution.

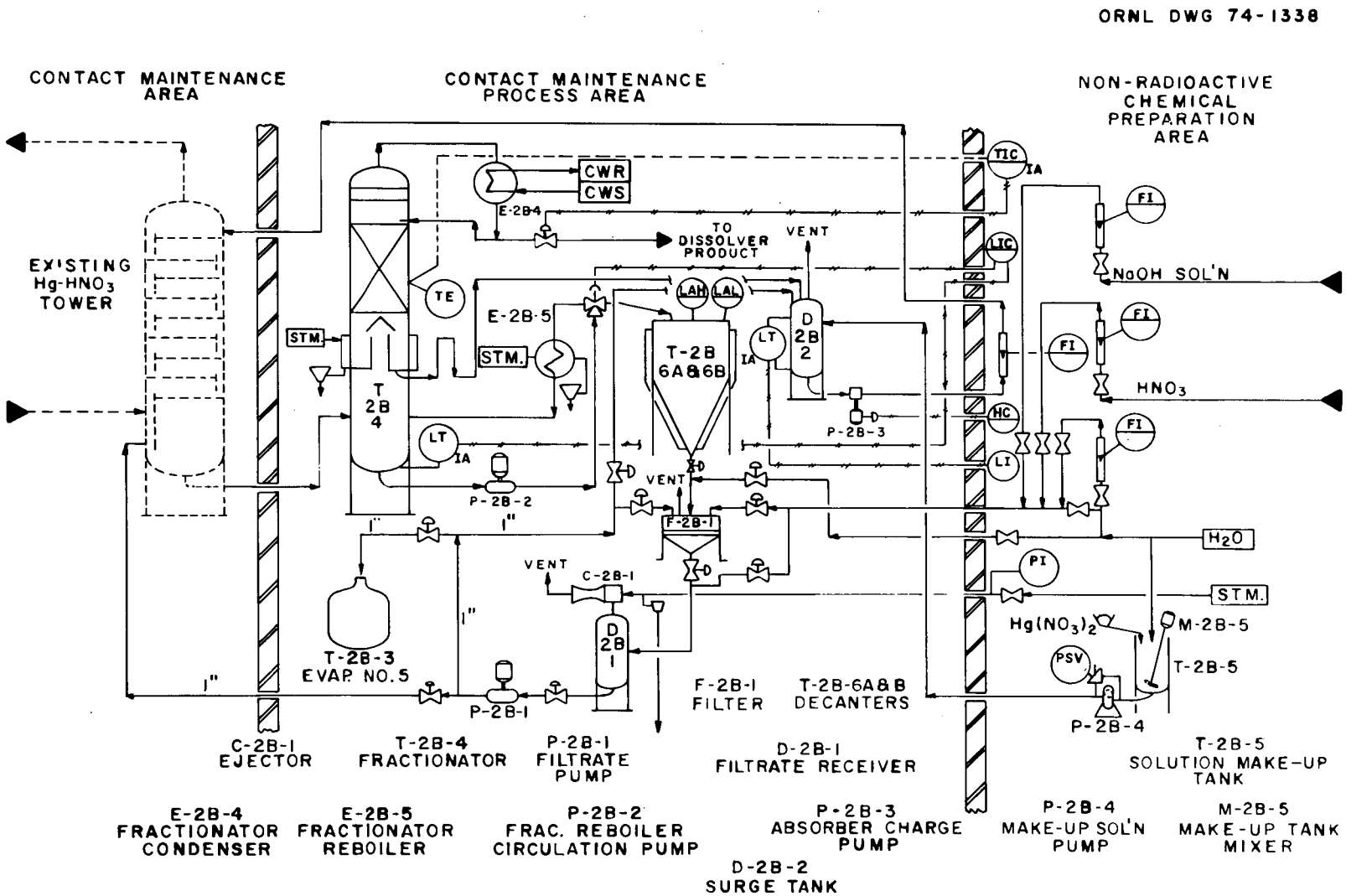

Fig. A-2. Equipment flowsheet for model HTGR nuclear fuel reprocessing plant radwaste treatment Case 2b - reduction in release of iodine - mercury recycle.

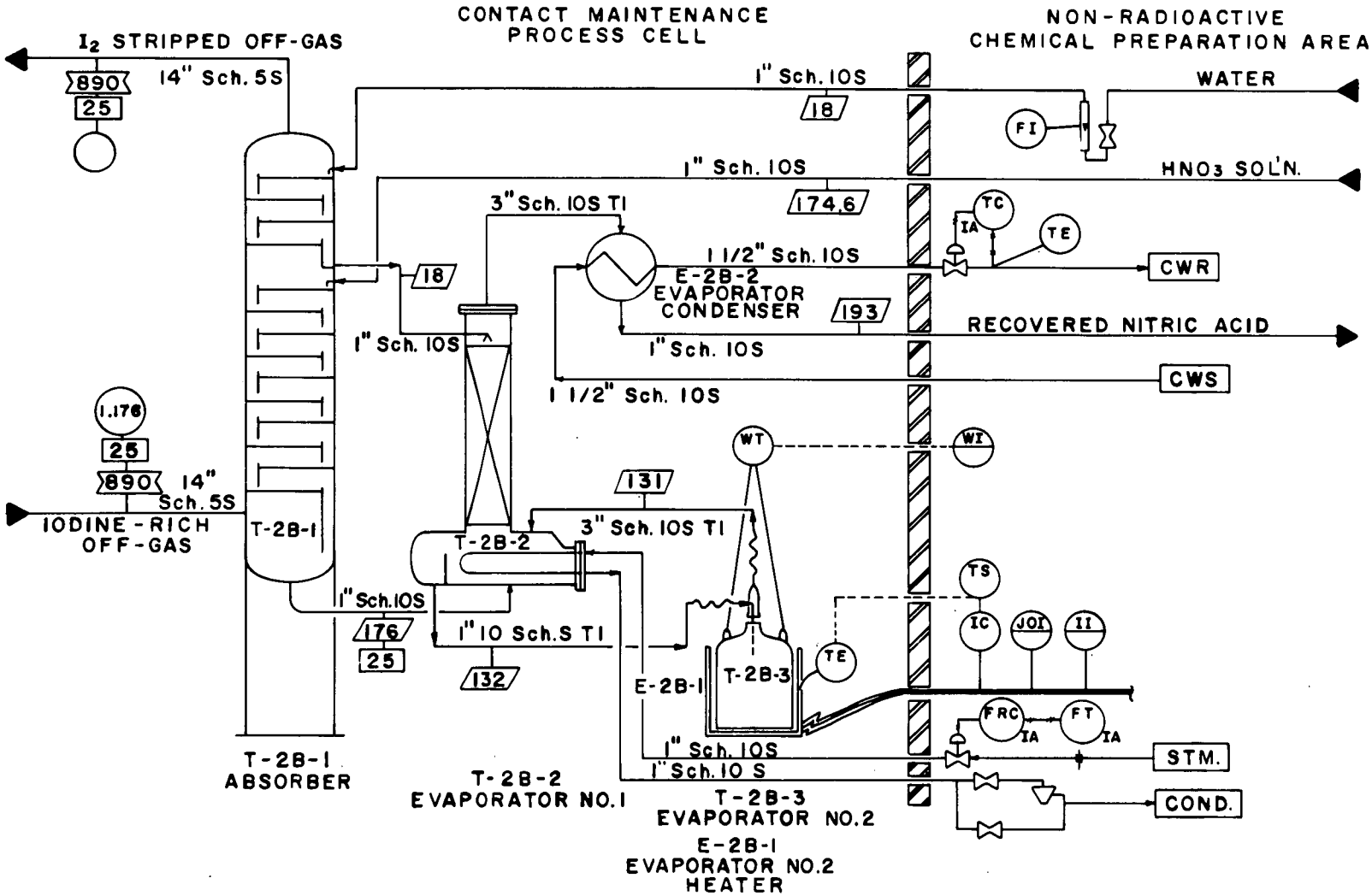

Fig. A-3. Equipment flowsheet for model HTGR nuclear fuel reprocessing plant radwaste treatment Case 2c - reduction in release of iodine - Iodox.

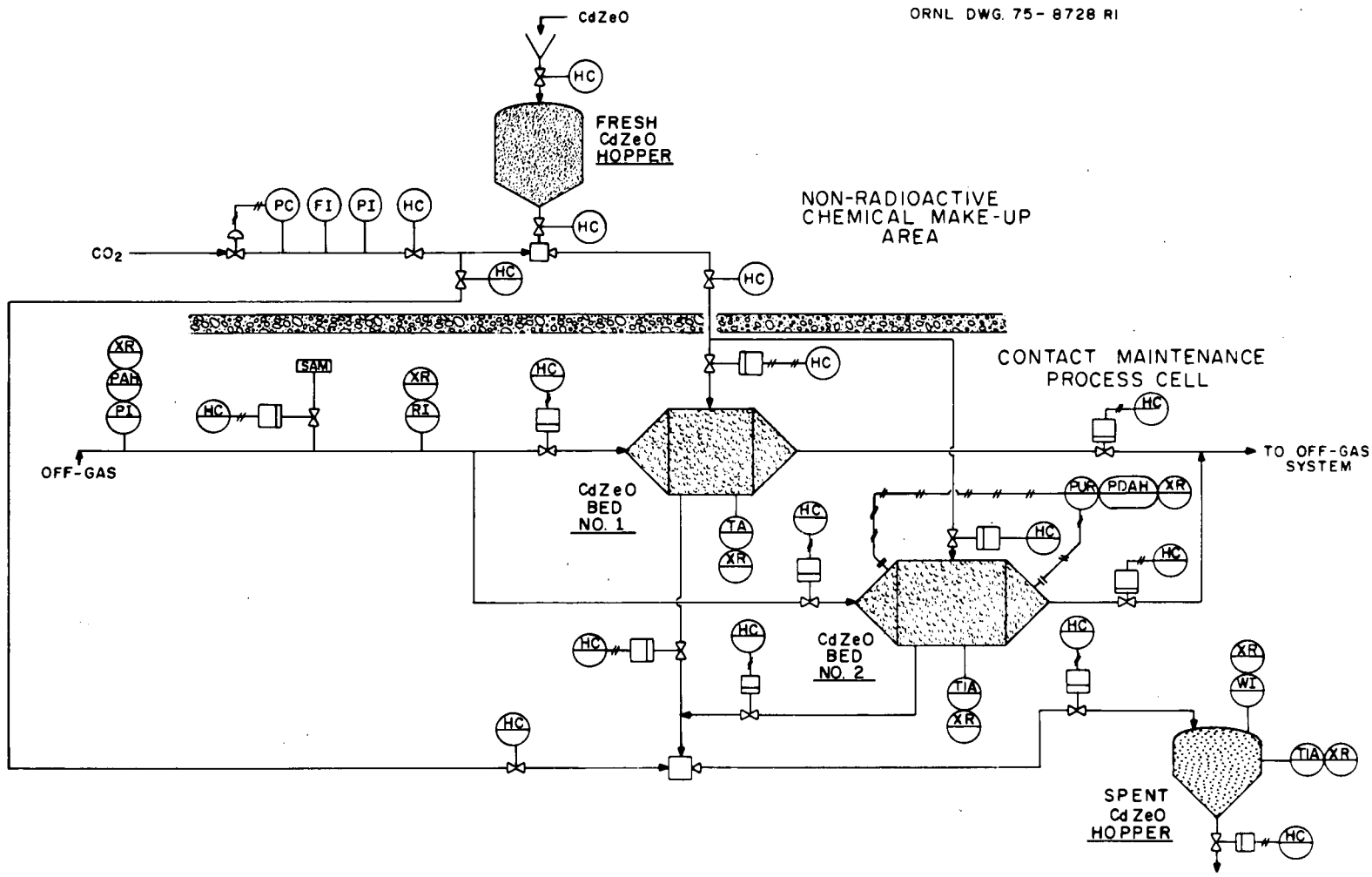

Fig. A-4. Equipment flowsheet for model HTGR nuclear fuel reprocessing plant radwaste treatment Case 2d - reduction in release of iodine - iodine absorption on CdZeO.

ORNL DWG 74-1322RI

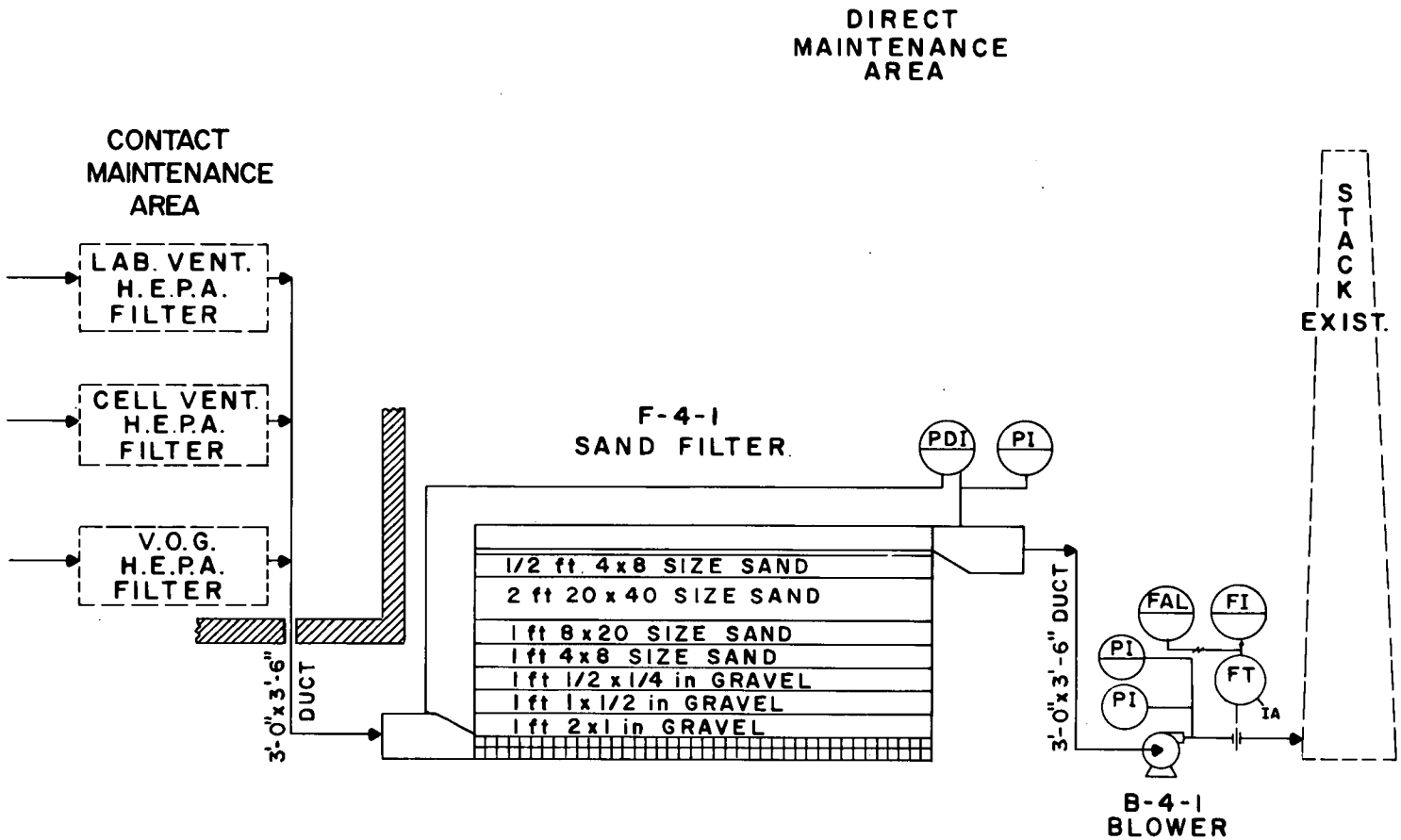

Fig. A-5. Equipment flowsheet for model HTGR nuclear fuel reprocessing plant radwaste treatment Cases 3 and 7 - reduction in release of particulates - sand filter.

ORNL DWG. 75-8726R1

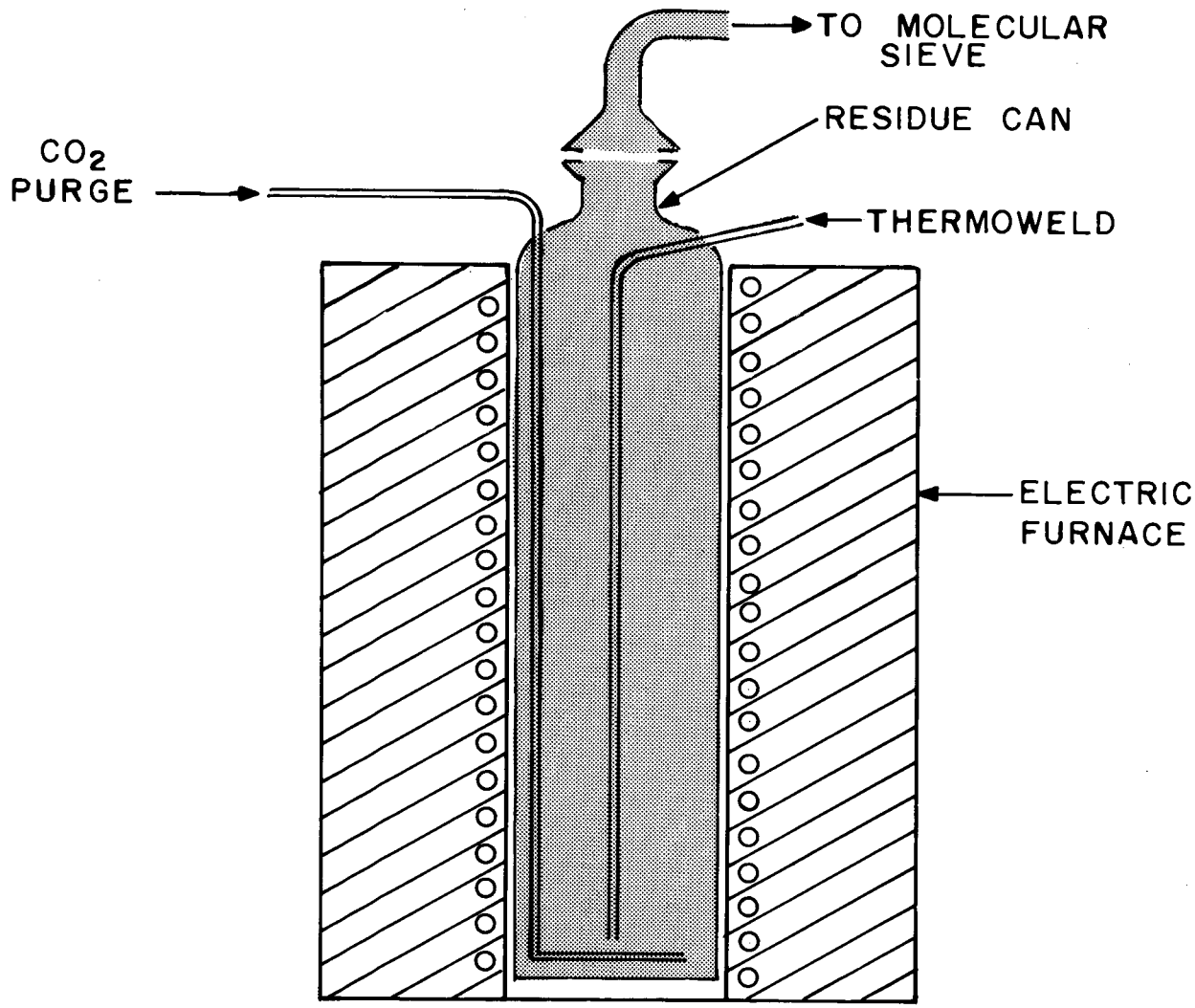

Fig. A-6. Schematic diagram of batch tritium bake-out equipment for model HTGR nuclear fuel reprocessing plant radwaste treatment Cases 4 and 7 - reduction in the release of tritium.

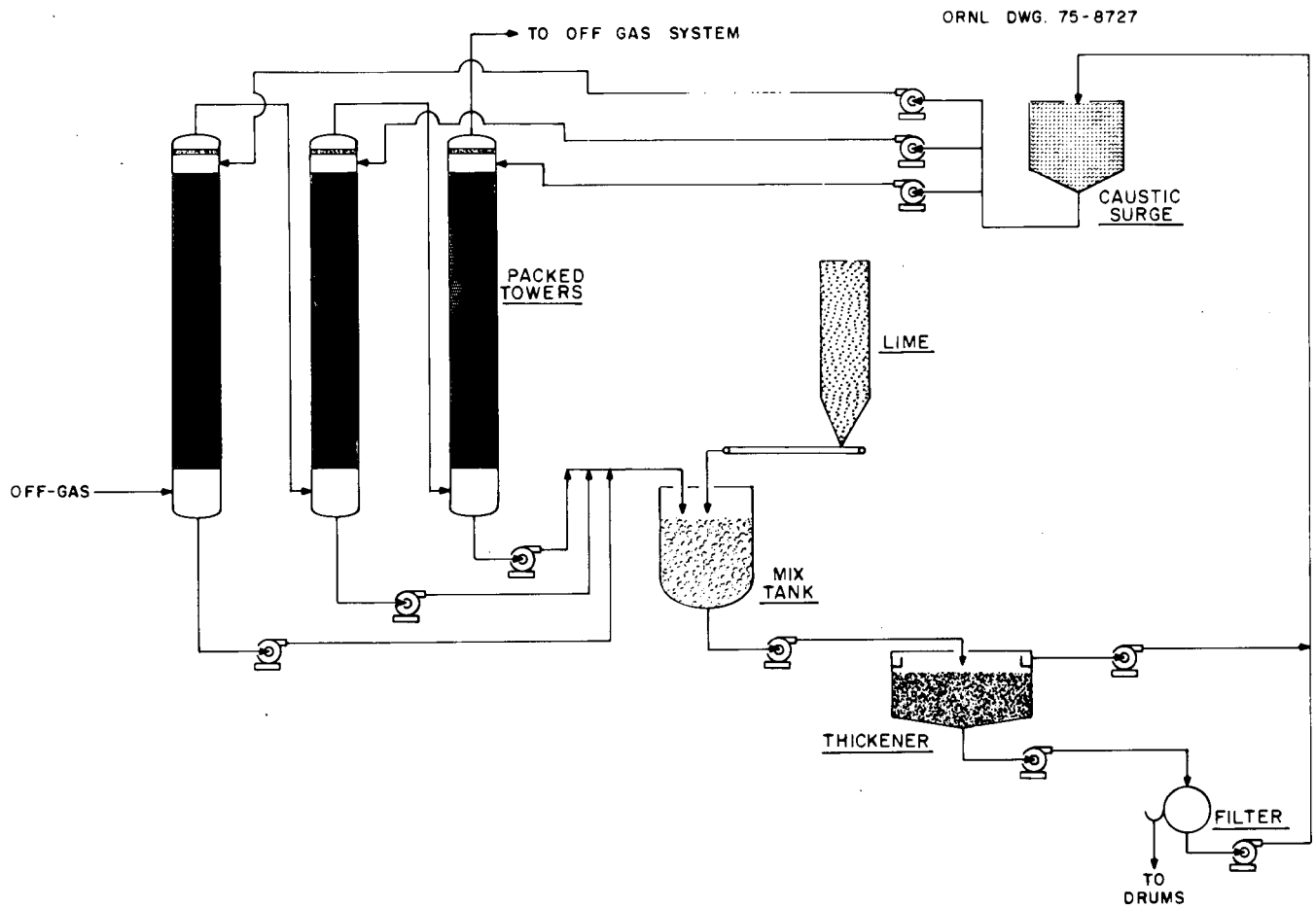

Fig. A-7. Equipment flowsheet for model HTGR nuclear fuel reprocessing plant radwaste treatment Cases 6 and 7 - reduction in the release of carbon-14 - conversion of CO_2 to $CaCO_3$.

ORNL/NUREG/TM-4
Distribution Category UC-11

INTERNAL DISTRIBUTION

1. S. I. Auerbach
2. J. A. Auxier
3. S. E. Beall
4-44. R. E. Blanco
45. J. O. Blomeke
46. R. E. Brooksbank
47. K. B. Brown
48. W. D. Burch
49. C. A. Burchsted
50. C. F. Coleman
51. F. L. Culler
52. R. C. Dahlman
53-62. W. Davis, Jr.
63. V. A. DeCarlo
64. G. G. Fee
65. M. L. Feldman
66. D. E. Ferguson
67. B. C. Finney
68. E. J. Frederick
69. W. Fulkerson
70. H. W. Godbee
71. H. E. Goeller
72. W. R. Grimes
73. W. S. Groenier
74. W. F. Harris
75. C. C. Haws
76. G. S. Hill
77. B. L. Houser
78. M. S. Judd
79. P. R. Kasten
80. S. V. Kaye
81. O. L. Keller
82. A. H. Kibbey
83. F. G. Kitts
84. R. E. Leuze
85. K. H. Lin
86. A. L. Lotts
87. A. P. Malinauskas
88. J. P. McBride
89. W. C. McClain
90. J. D. McGaugh, ORGDP
91. L. E. McNeese
92. R. E. Moore
93. J. M. Morrison, ORGDP
94. M. L. Myers
95. K. J. Notz
96. A. R. Olsen
97. J. R. Parrott
98. H. Postma
99. C. O. Reiser
100. C. R. Richmond
101. J. W. Roddy
102. P. S. Rohwer
103. M. W. Rosenthal
104. A. D. Ryon
105. C. T. Sanders
106. C. D. Scott
107. M. B. Sears
108. J. D. Sease
109. J. W. Snider
110. E. G. Struxness
111. J. E. Till
112. D. B. Trauger
113. W. E. Unger
114. P. R. Vanstrum
115. V. C. A. Vaughen
116. B. L. Vondra
117. J. W. Wachter
118. C. D. Watson
119. J. P. Witherspoon
120. R. G. Wymer
121. O. O. Yarbro
122. W. K. Davis (consultant)
123. J. C. Frye (consultant)
124. C. H. Ice (consultant)
125. R. B. Richards (consultant)
126-127. Central Research Library
128-129. Document Reference Section
130-150. Laboratory Records
151. Laboratory Records-RC
152. ORNL Patent Office

EXTERNAL DISTRIBUTION

153. Research and Technical Support Division, ORO
154. J. A. Lenhard, ORO
155. J. Schacter, General Offices, UCND, Oak Ridge, Tenn.
156. F. P. Baranowski, Division of Nuclear Fuel Cycle and Production, Energy Research and Development Administration, Washington, D. C. 20545
157. N. F. Barr, Division of Biomedical and Environmental Research, Energy Research and Development Administration, Washington, D. C. 20545
158. E. S. Beckjord, Energy Research and Development Administration, Washington, D. C. 20545
159. M. B. Biles, Division of Operational Safety, Energy Research and Development Administration, Washington, D. C. 20545
160. R. D. Cooper, Division of Biomedical and Environmental Research, Energy Research and Development Administration, Washington, D. C. 20545
161. K. E. Cowser, Office of the Assistant Administrator for Environment and Safety, Energy Research and Development Administration, Washington, D. C. 20545
162. R. J. Engleman, Division of Biomedical and Environmental Research, Energy Research and Development Administration, Washington, D. C. 20545
163. R. Franklin, Division of Biomedical and Environmental Research, Energy Research and Development Administration, Washington, D. C. 20545
164. J. H. Harley, Health and Safety Laboratory, Energy Research and Development Administration, 376 Hudson St., New York, N. Y. 10014
165. R. L. Hirsch, Division of Controlled Thermonuclear Research, Energy Research and Development Administration, Washington, D. C. 20545
166. R. H. Kennedy, Energy Research and Development Administration, Washington, D. C. 20545
167. J. L. Liverman, Office of the Assistant Administrator for Environment and Safety, Energy Research and Development Administration, Washington, D. C. 20545
168. W. H. McVey, Energy Research and Development Administration, Washington, D. C. 20545
169. D. R. Miller, Division of Physical Research, Energy Research and Development Administration, Washington, D. C. 20545
170. W. S. Osborn, Division of Biomedical and Environmental Research, Energy Research and Development Administration, Washington, D. C. 20545
171. C. O. Osterberg, Division of Biomedical and Environmental Research, Energy Research and Development Administration, Washington, D. C. 20545
172. G. B. Pleat, Division of Nuclear Fuel Cycle and Production, Energy Research and Development Administration, Washington, D. C. 20545

173. A. J. Pressesky, Division of Reactor Research and Development, Energy Research and Development Administration, Washington, D. C. 20545
174. H. E. Stelling, Energy Research and Development Administration, Washington, D. C. 20545
175. J. Swinebroad, Division of Biomedical and Environmental Research, Energy Research and Development Administration, Washington, D. C. 20545
176. R. Watters, Division of Biomedical and Environmental Research, Energy Research and Development Administration, Washington, D. C. 20545
177. B. J. Mann, Thorium Fuel Cycle Study Project Officer, Environmental Protection Agency, P. O. Box 15027, Las Vegas, Nevada 89114
178. W. A. Mills, Criteria and Standards Division, Room 635C, Waterside Mall, Environmental Protection Agency, Washington, D. C. 20460
179. J. L. Russell, Office of Radiation Programs, Environmental Protection Agency, 401 M St. SW, Washington, D. C. 20460
180. J. J. Swift, Technology and Assessments Branch, ORP, Environmental Protection Agency, Washington, D. C. 20460
181. J. H. Davis, Tennessee Valley Authority, Radiological Hygiene Branch, River Oaks Building, Muscle Shoals, Ala. 35660
182. L. Stratton, Assistant State Sanitary Engineer, State of Illinois, Department of Public Health, 525 W. Jefferson, Springfield, Ill. 62761
183. J. Matuszek, New York State Department of Health, Albany, N. Y. 12201
184. L. Burris, Jr., Argonne National Laboratory, 9700 South Cass Avenue, Argonne, Ill. 60439
185. C. E. Stevenson, Argonne National Laboratory, 9700 South Cass Ave., Argonne, Ill. 60439
186. C. Braun, Applied Science Department, Engineering Systems Analysis Division, Brookhaven National Laboratory, Upton, N. Y. 11973
187. D. M. Rohrer, Los Alamos Scientific Laboratory, P. O. Box 1663, MS 518, Los Alamos, N. M. 87547
188. R. O. Pohl, Laboratory of Atomic and Solid State Physics, Cornell University, Ithaca, N. Y. 14853
189. G. G. Eichholz, Georgia Institute of Technology, School of Nuclear Engineering, Atlanta, Ga. 30332
190. B. Kahn, Environmental Resources Center, Georgia Institute of Technology, Atlanta, Ga. 30332
191. A. Schneider, Georgia Institute of Technology, School of Nuclear Engineering, Atlanta, Ga. 30332
192. M. Eisenbud, New York University Medical Center, Institute of Environmental Median, 550 1st Ave., New York, N. Y. 10016
193. A. M. Weinberg, Oak Ridge Associated Universities, Oak Ridge, Tenn. 37830
194. B. Spinrad, Radiation Center, Oregon State University, Corvallis, Oregon 97331
195. R. K. Weatherwax, Engineering Quadrangle, Rm C428, Princeton University, Princeton, N. J. 08540
196. G. H. Whipple, Chairman, School of Public Health, University of Michigan, Ann Arbor, Michigan 48104

197. B. L. Cohen, Department of Physics, University of Pittsburgh, Pittsburgh, Pa. 15261
198. K. G. Schiager, Department of Radiation Health, Graduate School of Public Health, University of Pittsburgh, Pittsburgh, Pa. 15261
199. F. L. Parker, Socio-Engineering, Vanderbilt University, Nashville, Tenn. 37235
200. E. J. Salmon, National Academy of Science, 2101 Constitution Ave., Washington, D. C. 20418
201. T. R. Lash, National Resources Defense Council, Inc., 664 Hamilton Avenue, Palo Alto, Calif. 94301
202. W. R. Ney, Executive Director, National Council on Radiation Protection and Measurements, 7910 Woodmont Avenue, Suite 1016, Bethesda, Md. 20014
203. L. S. Taylor, National Council on Radiation Protection and Measurements, 7910 Woodmont Avenue, Suite 1016, Bethesda, Md. 20014
204. R. F. Foster, Pacific Northwest Laboratory, Battelle Memorial Institute, Box 999, Richland, Wash. 99352
205. A. M. Platt, Pacific Northwest Laboratory, Battelle Memorial Institute, Box 999, Richland, Wash. 99352
206. K. J. Schneider, Pacific Northwest Laboratory, Battelle Memorial Institute, Box 999, Richland, Wash. 99352
207. J. M. Selby, Pacific Northwest Laboratory, Battelle Memorial Institute, Box 999, Richland, Wash. 99352
208. J. M. Taylor, Pacific Northwest Laboratory, Battelle Memorial Institute, Box 999, Richland, Wash. 99352
209. G. L. Simmons, Science Applications, Inc., 1200 Prospect St., LaJolla, Calif. 92037
210. J. A. Buckham, Allied Chemical Corporation, Idaho Chemical Programs Operations Office, 550 2nd St., Idaho Falls, Idaho 83401
211. A. D. Riley, Allied Chemical Company, P. O. Box 430, Metropolis, Ill. 62960
212. A. P. Roeh, Allied Chemical Corporation, Idaho Chemical Programs Operations Office, 550 2nd Street, Idaho Falls, Idaho 83401
213. C. M. Slansky, Allied Chemical Corporation, Idaho Chemical Programs Operations Office, 550 2nd Street, Idaho Falls, Idaho 83401
214. R. Yates, Health Physicist, Allied Chemical Company, P. O. Box 430, Metropolis, Ill. 62960
215. A. L. Ayers, Allied General Nuclear Services, P. O. Box 847, Barnwell, S. C. 29812
216. R. I. Newman, Allied General Nuclear Services, P. O. Box 847, Barnwell, S. C. 29812
217. A. Williams, Allied General Nuclear Services, P. O. Box 847, Barnwell, S. C. 29812
218. M. J. Szulinski, Atlantic Richfield Hanford Company, Federal Building, Richland, Wash. 99352
219. H. Gitterman, Director, Engineering and Research, Industrial Division, Burns and Roe, Inc., 283 Route 17 South, P. O. Box 663, Paramus, N. J. 07652
220. S. Beard, Exxon Nuclear Company, Field Box 3965, San Francisco, Calif. 94119

221. L. H. Brooks, General Atomic Company, P. O. Box 81608, San Diego, Calif. 92138
222. D. Farney, General Atomic Company, P. O. Box 81608, San Diego, Calif. 92138
223. C. A. Heath, General Atomic Company, P. O. Box 81608, San Diego, Calif. 92138
224. S. Langer, General Atomic Company, P. O. Box 81608, San Diego, Calif. 92138
225. W. V. Goeddel, General Atomic Company, P. O. Box 81608, San Diego, Calif. 92138
226. J. J. Shefcik, General Atomic Company, P. O. Box 81608, San Diego, Calif. 92138
227. A. B. Carson, Fast Breeder Reactor Department, Energy Resources and Technology Division, General Electric Company, 175 Curtner Avenue, San Jose, Calif. 95100
228. J. F. Fletcher, Hanford Engineering Development Laboratory, P. O. Box 1970, Richland, Wash. 99352
229. M. T. Walling, Kerr-McGee Company, Oklahoma City, Okla.
230. W. H. Lewis, Vice President, Nuclear Fuel Services, Inc., 6000 Executive Boulevard, Suite 600, Rockville, Maryland 20852
231. H. Lawroski, General Manager, Environmental Services Department, Nuclear Services Corporation, 1700 Dell Ave., Campbell, CA 95008
232. W. A. Rodger, Nuclear Safety Associates, 5101 River Road, Bethesda, Maryland 20016
233. J. S. Theilacker, Manager, Advanced Reactor Division Operations, Westinghouse Electric Corporation, Waltz Mill Site, P. O. Box 158, Madison, Pa. 15663
234. Ferruccio Gera, C.N.E.N, Viale Regina, Margherita 125, 00198, Roma, Italy
235. K. D. B. Johnson, U.K.A.E.R.E., Harwell, Didcot, Berkshire, England

236-467. Given distribution as shown in TID-4500 under Category UC-11 - Environmental and Earth Sciences (75 copies - NTIS)

NUCLEAR REGULATORY COMMISSION

468-469. R. M. Bernero, Fuel Fabrication and Reprocessing Branch No. 2, Division of Materials and Fuel Cycle Facility Licensing, U. S. Nuclear Regulatory Commission, Washington, D. C. 20555
470. W. P. Bishop, Waste Management Branch, Division of Fuel Cycle and Material Safety, U. S. Nuclear Regulatory Commission, Washington, D. C. 20555
471. R. B. Chitwood, Division of Fuel Cycle and Material Safety, U. S. Nuclear Regulatory Commission, Washington, D. C. 20555
472. J. T. Collins, U. S. Nuclear Regulatory Commission, Washington, D. C. 20555
473. F. Empson, Fuel Fabrication and Reprocessing Branch No. 1, Division of Fuel Cycle and Material Safety, U. S. Nuclear Regulatory Commission, Washington, D. C. 20555
474. H. Lowenberg, Assistant Director for Program Development and Evaluation, Division of Fuel Cycle and Material Safety, U. S. Nuclear Regulatory Commission, Washington, D. C. 20555

475-478. L. C. Rouse, Fuel Fabrication and Reprocessing Branch No. 1, Division of Materials and Fuel Cycle Facility Licensing, U. S. Nuclear Regulatory Commission, Washington, D. C. 20555

479-503. K. G. Steyer, Fuel Process Systems Standards Branch, Division of Engineering Standards, U. S. Nuclear Regulatory Commission, Washington, D. C. 20555

☆ U.S. GOVERNMENT PRINTING OFFICE: 1976-748-189/511