CENTRAL RESEARCH LIBRARY

OAK RIDGE NATIONAL LABORATORY LIBRARIES

3 4456 0599469 2

ORNL/TM-5501

cy 1

HTGR Fuel and Fuel Cycle Technology

A. L. Lotts
J. H. Coobs

OAK RIDGE NATIONAL LABORATORY
CENTRAL RESEARCH LIBRARY
DOCUMENT COLLECTION
LIBRARY LOAN COPY
DO NOT TRANSFER TO ANOTHER PERSON
If you wish someone else to see this document, send in name with document and the library will arrange a loan.
UCN-7969
(3 3-67)

OAK RIDGE NATIONAL LABORATORY
OPERATED BY UNION CARBIDE CORPORATION FOR THE ENERGY RESEARCH AND DEVELOPMENT ADMINISTRATION

Printed in the United States of America. Available from
National Technical Information Service
U.S. Department of Commerce
5285 Port Royal Road, Springfield, Virginia 22161
Price: Printed Copy $4.50; Microfiche $2.25

This report was prepared as an account of work sponsored by the United States Government. Neither the United States nor the Energy Research and Development Administration/United States Nuclear Regulatory Commission, nor any of their employees, nor any of their contractors, subcontractors, or their employees, makes any warranty, express or implied, or assumes any legal liability or responsibility for the accuracy, completeness or usefulness of any information, apparatus, product or process disclosed, or represents that its use would not infringe privately owned rights.

ORNL/TM-5501
UC-77 (Gas-Cooled
Reactor Technology)

Contract No. W-7405-eng-26
METALS AND CERAMICS DIVISION

HTGR BASE TECHNOLOGY PROGRAM
(189a OH002)

and

THORIUM UTILIZATION PROGRAM
(189a OH045)

HTGR FUEL AND FUEL CYCLE TECHNOLOGY

A. L. Lotts and J. H. Coobs

AUGUST 1976

NOTICE This document contains information of a preliminary nature and was prepared primarily for internal use at the Oak Ridge National Laboratory. It is subject to revision or correction and therefore does not represent a final report.

OAK RIDGE NATIONAL LABORATORY
Oak Ridge, Tennessee 37830
operated by
UNION CARBIDE CORPORATION
for the
ENERGY RESEARCH AND DEVELOPMENT ADMINISTRATION

CONTENTS

ABSTRACT 1
INTRODUCTION 1
REACTOR DESIGNS AND OPERATING CONDITIONS 2
ALTERNATIVE FUEL CYCLES 6
FUELS FOR STEAM-CYCLE HTGRs 9
Prismatic Fuel 9
Graphite Material Requirements 12
Pebble-Bed Reactor Fuels 13
Coated Particle Fuel for Thorium Cycle Systems 14
Kernel Fabrication 15
Coating Preparation 17
Particle Performance Experience 18
ADVANCED HTGR APPLICATIONS 25
FUEL CYCLE DEVELOPMENT 26
Fuel Cycle Operations 27
Process and Facility Requirements 28
Program Development Logic 31
Status of Th-^{233}U Fuel Cycle Development 31
Fuel Handling 34
Reprocessing 34
Refabrication 37
Waste Treatment 41
CONCLUSIONS 42
ACKNOWLEDGMENTS 45

HTGR FUEL AND FUEL CYCLE TECHNOLOGY

A. L. Lotts and J. H. Coobs

ABSTRACT

The status of fuel and fuel cycle technology for high-temperature gas-cooled reactors (HTGRs) is reviewed. The all-ceramic core of the HTGRs permits high temperatures compared with other reactors. Core outlet temperatures of 740°C are now available for the steam cycle. For advanced HTGRs such as are required for direct-cycle power generation and for high-temperature process heat, coolant temperatures as high as 1000°C may be expected. This paper discusses the variations of HTGR fuel designs that meet the performance requirements and the requirements of the isotopes to be used in the fuel cycle. Also discussed are the fuel cycle possibilities, which include the low-enrichment cycle, the Th-^{233}U cycle, and plutonium utilization in either cycle. The status of fuel and fuel cycle development is summarized.

INTRODUCTION

The high-temperature gas-cooled reactor (HTGR) provides broad flexibility in application and in the utilization of fuel. The all-ceramic core permits high outlet coolant temperatures compared with other reactors; thus the HTGR can be used with either steam cycle or gas turbine generating equipment. Also, the HTGR can be used as a source of high-temperature process heat. Core outlet temperatures up to 740°C are now available for the steam cycle. For very advanced HTGRs 1000°C may be expected. There are two basic HTGR designs: one uses spherical fuel elements, and the other uses a prismatic fuel. Within each fuel concept the fuel designs have a number of variations of geometry, fuel composition, and nonnuclear structural materials. Fuel cycle possibilities for HTGRs include the low-enrichment cycle and the Th-^{233}U cycle, with plutonium utilization in either cycle.

In this report we shall examine the alternative fuel designs and the alternative fuel cycles, especially for the steam-cycle HTGR, and we shall project what might be possible on the basis of fuel technology and fuel cycle technology for future applications. Since the details of fuel cycle technology and fuel technology cannot be considered without reference to basic reactor designs and to fuel cycle concepts that can be used in these designs, the report summarizes the reactor designs and operating conditions and alternative fuel cycles before the consideration of detailed technology.

REACTOR DESIGNS AND OPERATING CONDITIONS

The two basic HTGR designs are the pebble-bed HTGR based on the use of spherical fuel elements and the prismatic-fueled HTGR, the fuel element for which is a graphite block with integral coolant and fuel channels. The principal differences in the core design are illustrated in Fig. 1. The spherical fuel elements of the pebble-bed reactor allow on-load refueling by gravity. In the prismatic concept, off-load refueling by a loading machine is necessary. Also, the smaller size of the spherical fuel elements allows full-scale testing of fuel elements in a number of reactors. By contrast, the larger prismatic fuel elements require that most tests be done at partial scale.

There are many similarities in the designs of the two basic systems. The common features are helium as coolant, the primary cooling system, the in-core material, the type and design of the prestressed concrete reactor vessel (PCRV), most fuel components, basic safety concept, the fuel cycle, the power conversion equipment, and independent auxiliary heat removal system. Table 1 presents relevant design data for three HTGR concepts designed for steam cycle application: (1) a THTR-1000 designed by Hochtemperatur-Reaktorbau (HRB); (2) an HTGR-1160 designed

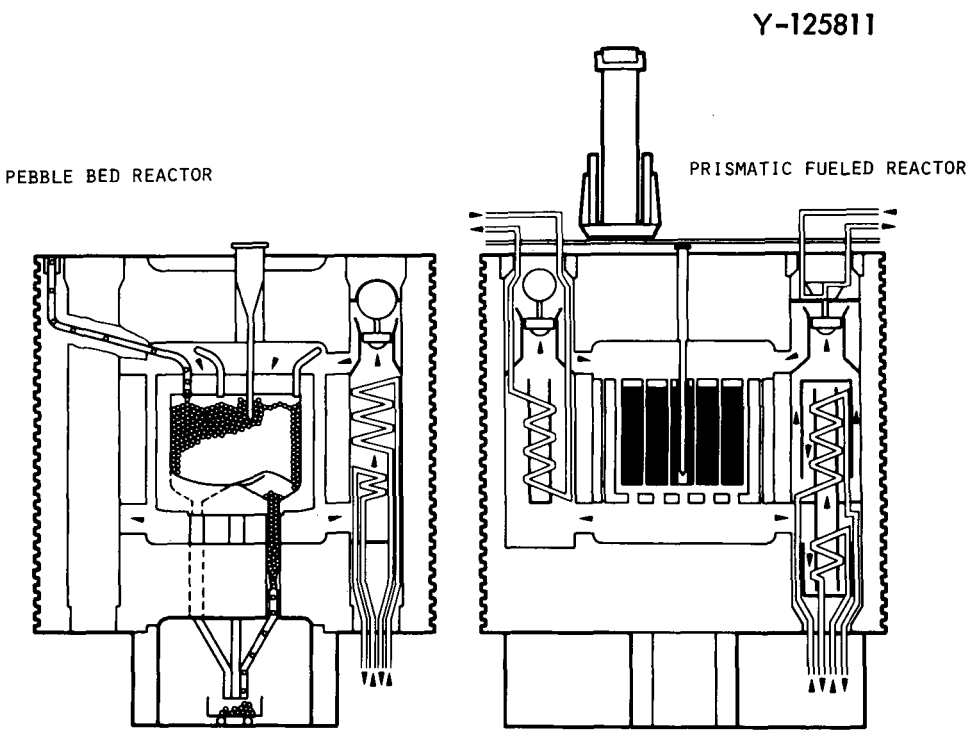

Fig. 1. Two Typical HTGR Designs. (Ref: H. Oehme, "Comparative HTGR Designs," *Gas-Cooled Reactors: HTGR and GCFBR, Gatlinburg, Tenn., May 7–10, 1974*, CONF-740501, pp. 72–91.)

Table 1. Design Data for Three HTGRs for Steam Cycle Application

	THTR-1000	HTGR-1160	Low-Enriched HTR
Overall Plant			
Thermal power of reactor, MW	2700	3000	3430
Net electrical power (cooling tower), MW	1000	1150	1350
Fuel cycle	U/Th	U/Th	low enriched
Reheating of steam	nuclear	nuclear	steam to steam
Primary System			
Dimensions of fuel elements, cm	6	36 × 79.3	42 × 75
Core diameter, m	8.9	8.47	9.8
Core height, m	5.4	6.34	6
Number of fuel elements	1.8×10^6	3944	3768
Power density (mean), MW/m^3	8	8.4	~8
Helium flow rate, kg/s	1065	1414	1460
Helium temperature, °C			
Steam generator outlet	275	310	273
Steam generator inlet	750	727	724
Mean operating pressure of helium, MPa	5.0	5.0	4.93
Number of shutdown and control rods	120	146	141, 47
Number of main coolant loops	6	6	4
Number of auxiliary coolant loops	3	3	4
Fuel loading and discharge tubes	24 + 3	73	54
PCRV			
Design	pod-type	pod-type	pod-type
Tendons	wire-winding	wire-winding	wire-winding
Outside diameter, m	27.3	30.6	34.5
Outiside height, m	26	27.8	31
Test pressure, MPa	~5.5	5.45	
Insulation	ceramic	ceramic	ceramic
Fuel Element			
Fuel lifetime, full-power years	2.3	3.2	2.25
Maximum fuel temperature, °C	1120	1350	1150
Mean fuel burnup, MWD/t	83,000	98,000	85,000
Max fast (>0.1 MeV) neutron fluence in nonreplaceable reflector, cm^{-2}	2.0×10^{22}	4×10^{20}	
Fuel particles	$UO_2 + ThO_2$	$UC_2 + ThO_2$	UO_2
Fuel coatings	PyC	SiC-PyC	SiC
Max fast (>0.1 MeV) neutron fluence in fuel, cm^{-2}	5×10^{21}	9×10^{21}	$\sim 4 \times 10^{21}$

by General Atomic Company; and (3) a low-enriched HTR designed by British Nuclear Design and Construction Company (BNDC).[1] These designs provide inlet temperatures to steam generators ranging from 724 to 750°C with maximum fuel temperatures ranging from 1120 to 1350°C.

An arrangement of the nuclear steam supply system is shown in Fig. 2, which is an 1160-MW(e) design by General Atomic Company. The system consists of the active core and reflector regions, the main helium circulators, the auxiliary circulators, the associated steam generators and heat exchangers, and the helium purification system, all of which are contained in the PCRV. The primary coolant flows from the circulators through the core, then through the steam generators and back through the circulators, as depicted in Fig. 2.

---

[1]H. Oehme, "Comparative HTGR Designs," *Gas-Cooled Reactors: HTGR and GCFBR, Gatlinburg, Tenn., May 7–10, 1974,* CONF-740501, pp. 72–91.

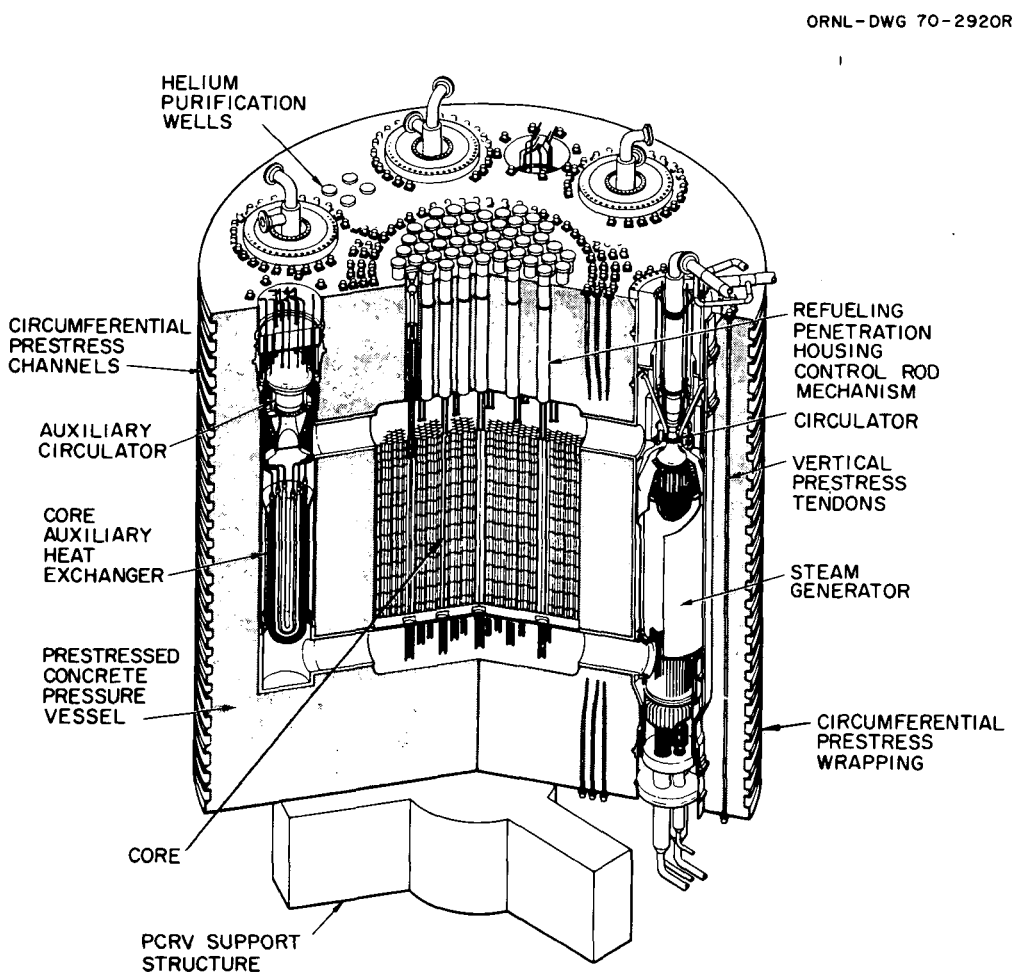

Fig. 2. Arrangement of Nuclear Steam Supply System for an 1160-MW(e) HTGR.

The high-temperature capability offered by the HTGR has encouraged proposals and development programs for application of the HTGR to closed-cycle gas turbine for power generation and to high-temperature process heat applications. Krämer[2] and Fortescue and Quade[3] have summarized the designs for direct-cycle HTGR systems. Fortescue also presented a discussion of the application of HTGRs to industrial process heat requirements. In all cases, the arrangements of the primary systems are very similar to those for the steam cycle application.

For the advanced applications, the important considerations are the maximum available gas temperature and the maximum fuel temperatures that will be experienced in the advanced applications. Obviously, direct-cycle gas turbine and process heat applications can utilize the presently available maximum core outlet temperature. Table 2 summarizes fuel performance requirements for direct cycle and process heat applications, and for comparison present temperatures generally available in the steam cycle are given. All the data presented in Table 2 are for prismatic fuel concept of the General Atomic Company. As noted in Table 2, the fuel design of General Atomic Company can be revised to lower the temperature; thus, the target fuel temperatures of interest have a maximum of approximately 1500°C. All other parameters of interest with respect to performance are similar to those presented for the steam-cycle HTGRs in Table 1 and the fuel cycle application is identical.

---

[2]H. Krämer et al., "HTGR for Direct Cycle and Process Heat Applications," *Gas-Cooled Reactors: HTGR and GCFBR, Gatlinburg, Tenn., May 7–10, 1974*, CONF-740501, pp. 378–96.

[3]P. Fortescue and R. N. Quade, "Direct-Cycle and Process Heat HTGR Development," *Gas-Cooled Reactors: HTGR and GCFBR, Gatlinburg, Tenn., May 7–10, 1974*, CONF-740501, pp. 397–417.

Table 2. Fuel Temperatures for Present and Advanced HTGRs

Location	Temperature, °C		
	Present Capability[a]	Required	
		Near-Term	Advanced
Core inlet	310	515	515
Core outlet	730	815	980
Present-design fuel			
Peak	1350	1500	1750
Maximum nominal	1250	1400	1630
Revised-design fuel[b]			
Peak		1350	1500
Maximum nominal		1250	1400

[a]Based on steam cycle technology.

[b]Various design alternatives used to reduce fuel temperature.

ALTERNATIVE FUEL CYCLES

HTGRs have great flexibility with respect to the fuel cycle that can be employed. Indeed, this is fortunate since optimization of the fuel cycle is very complex, not only because of the technology involved, but also because of the large uncertainties of future fuel values, the condition of the economy, the availability of fuel cycle technologies, and the makeup of the reactor power industry in the future. The HTGR can very effectively use various combinations of the fissile materials ^{235}U, ^{233}U, and plutonium and the fertile materials ^{238}U and thorium.

Depicted in Fig. 3 are the low-enrichment cycle with a plutonium option, the Th-^{233}U fuel cycle, and the Th-^{233}U cycle utilizing plutonium. (It is not clear that an HTGR can effectively utilize plutonium at start-up, but plutonium certainly can be used as makeup fuel.) In the low-enrichment cycle, options are available to retire the spent fuel blocks without reprocessing or to reprocess. The determination of which option is to be pursued would depend on future value of the fuel, fuel block storage costs, and the cost of fuel recycle. In the Th-^{233}U fuel cycle, it is possible to recycle the ^{235}U, but the ^{236}U buildup will at some point require that the ^{235}U be retired. Thorium having passed through the reactor once is placed in interim storage to allow the ^{228}Th to decay to sufficiently low levels to allow the thorium to be treated essentially as virgin thorium in the fuel element fabrication process. Plutonium can be utilized in the low-enrichment cycle; as presented in Fig. 3(a), or it can be used in combination with thorium as a replacement for ^{235}U or ^{233}U.

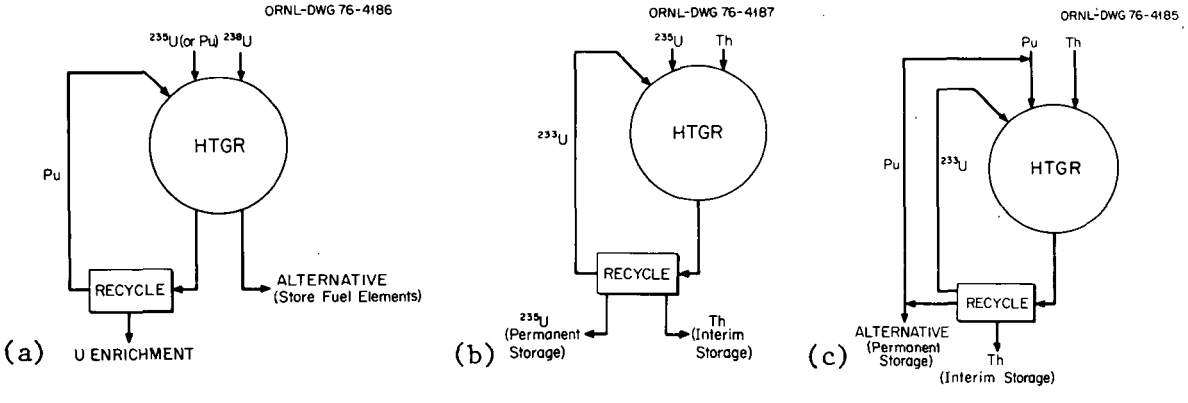

Fig. 3. Fuel Cycles for HTGRs. (a) Low enrichment. (b) Th-^{233}U. (c) Plutonium utilization in Th-^{233}U.

To give some indication of the competitiveness of the various fuel cycles, we reference a paper by Gutmann and Brogli.[4] Typical costs of alternative fuel cycles for HTGRs from their paper are given in Table 3; the assumptions used in the study are presented in Table 4. The study showed that if recycle technology is available for ^{233}U, then the Th-^{233}U cycle is the least costly. In the absence of a fast breeder reactor, the market can be expected to be oversupplied with plutonium, thus allowing the HTGR to operate essentially as a plutonium burner; then the use of plutonium has clear advantages over the use of the Th-^{233}U cycle. The plutonium-thorium cycle would remain competitive with the reference uranium-thorium cycle up to a plutonium parity value of 0.67. The results presented here are by no means an exhaustive treatment of optimization of fuel cycles for the HTGR, but do serve to indicate the flexibility provided by the reactor. Other opportunities for optimizing the fuel cycle are available through increasing the conversion ratio by adjustment of fertile and fissile inventories and other fuel management schemes.

---

[4]H. Gutmann and R. H. Brogli, "Alternate Fuel Cycles for HTGRs," paper presented at meeting on Gas-Cooled Reactors: HTGR and GCFBR, Gatlinburg, Tenn., May 7–10, 1974.

Table 3. Typical Costs of Alternative Fuel Cycles for HTGRs

Cycle	Reload Interval	Fuel Cycle Cost (mills/kWhr)
^{233}U-Th	Annual	1.87
^{233}U-Th	Semiannual	1.80
^{233}U-Th	On-line	1.75
Pu-low Th	2.5 years	1.58
Low-enriched	2.87 years	2.23

Table 4. Cost Assumptions for Study of Alternative Fuel Cycles[a]

Annual load factor	0.8
Total levelized reactor life, years	20
Interest rate, %	10
Uranium ore cost,	
$/lb U_3O_8	8
$/kg U_3O_8	17.6
Conversion cost $U_3O_8 \rightarrow UF_6$,	
$/kg U	2.34
Tail enrichment, %	0.25
Separative work cost, $/kg	50
Thorium cost, $/kg	10
Bred fuel parity: cost ratio of bred fuel to same mass of ^{235}U (in 93.5%-enriched U)	
Fissile plutonium	0.5
^{233}U	1.25
Fuel costs, $/fuel element	
Fabrication of fresh fuel, including shipping, block, coated particles, assembly	
Th cycle	1800
U cycle	1350
Pu cycle	4000
Fabrication of recycle fuel	2700
Shipping cost of spent fuel	
Th + U fuel	800
Pu fuel	1200
Reprocessing cost (head-end and chemical separation)	
Th Cycle	1300
U cycle	1200

[a]Cost assumptions are based on earlier (1973–1974) data; unit costs assumed are now subject to considerable uncertainty.

FUELS FOR STEAM-CYCLE HTGRs

The fuels developed for steam-cycle HTGRs were designed for use in the prismatic fuel element adopted for reactor stations in the United States and in the pebble-bed design that is being independently developed in West Germany. These systems both use the thorium cycle and use graphite as the structural material for the fuel element and the core of the reactor.

Prismatic Fuel

Steam-cycle HTGRs designed for prismatic cores use a fuel element illustrated in Fig. 4. The prismatic graphite block is about 0.76 m (30 in.) long by 0.36 m (14 in.) across the flats and has a central hole for the fuel lifting device. Standard fuel elements contain 72 cooling channels and 132 fuel holes to accommodate the fuel rods. Special fuel elements may also have larger holes for control rods and emergency shutdown systems.

The fuel rods are fabricated by blending the proper amount of coated fissile and fertile particles as they are added to the metal mold. The blended bed of particles is then intrusion bonded into a continuous structure with a carbonaceous matrix material at moderate temperatures (~150°C). The mold is then allowed to cool, and the fuel rods are ejected, put into trays or loaded into graphite blocks, and carbonized slowly to convert the carbonaceous matrix material into a continuous structure to bond the particles together.[5] In the reference process now being developed, the fuel rods are loaded directly into the fuel element block after ejection from the mold. The carbonization and heat treatment at 1800°C are done *in situ*. The element requires overall inspection after the carbonizing process to confirm that no damage had occurred externally. Individual fuel rods do not require inspection or handling in this process after carbonization. In the former process, the fuel rods are finally heat-treated at 1800°C to stabilize the structure and then loaded into the fuel elements. This fabrication sequence involves several steps of handling and inspection before the final loading. The matrix material used for bonding the fuel rods has special requirements. It must flow sufficiently well to bond the particles together completely into a fuel rod 50 to 75 mm (2–3 in.) long. The rods must retain their integrity during ejection from the mold and during any handling before loading, and the matrix material must withstand irradiation without affecting the performance of the particle coating or without losing bond strength so as to permit loss of particles. The materials used in the matrix comprise primarily coal tar pitch and a natural flake graphite or ground finely divided artificial graphite. The graphite mixed within the pitch provides a stable, high-conductivity material that will be held in place by the coke derived from carbonization of the pitch. Such a matrix having about 30% finely divided graphite in the pitch has a density of about 0.7 g/cm^3 and sufficient strength to retain particles.

---

[5]R. A. Bradley and J. D. Sease, "The Slug-Injection Process for Fabricating HTGR Fuel Rods," *11th Bienn. Conf. Carbon, Gatlinburg, Tenn., June 4–8, 1973*, CONF-730601, pp. 239–40.

Y-116302

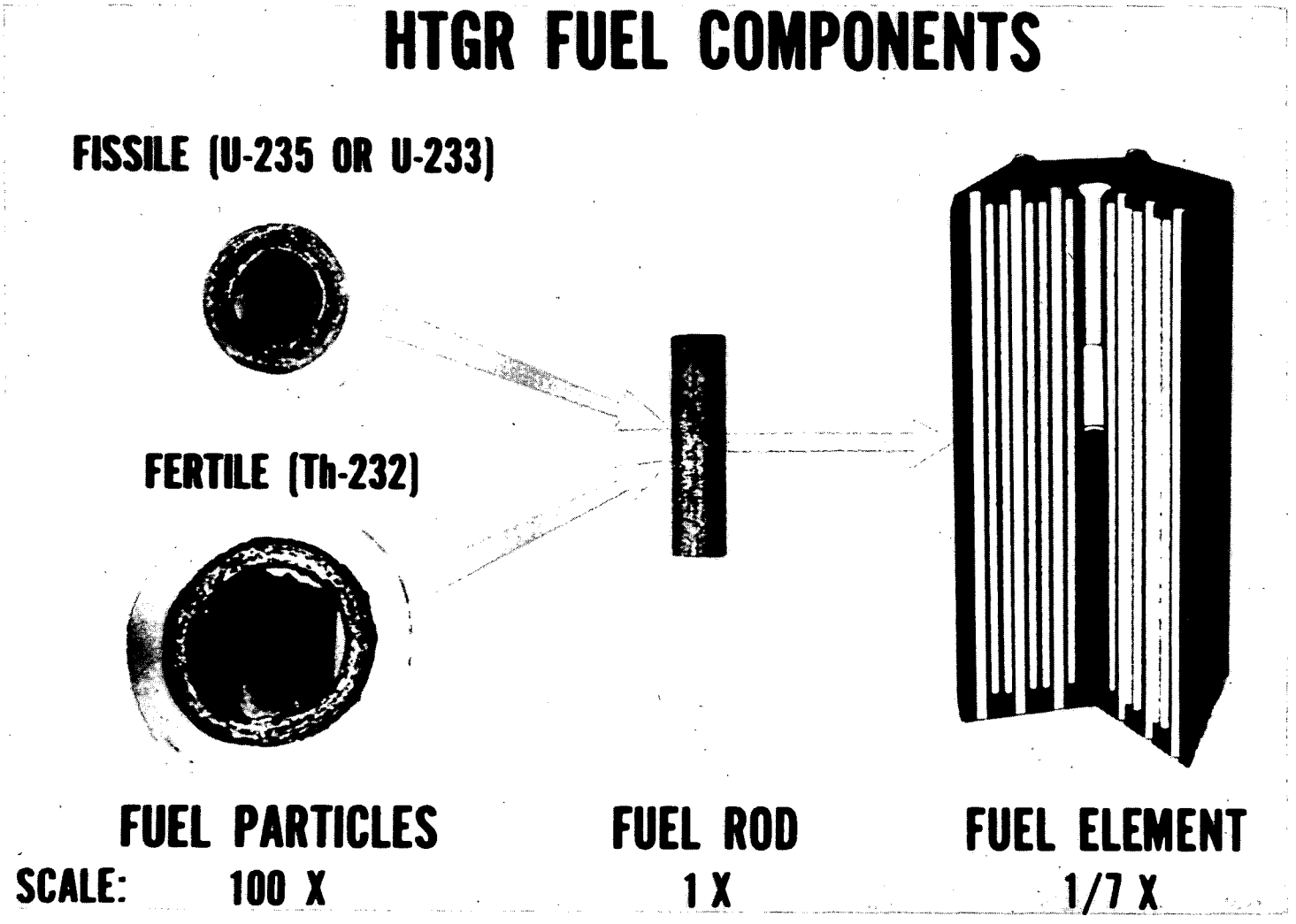

Fig. 4. HTGR Fuel Components.

The procedures for qualifying and verifying the performance of the fuel rods involve characterization procedures such as measurement of density, the recovery of the particles by dissolving away matrix material from selected samples, and the analysis of completed fuel rods for exposed heavy metals by a gas leaching technique. The most important qualification involves irradiation testing, which has been carried out both in capsules and in prototype reactors.[6] The capsule tests contained fuel rods supported in graphite blocks with spacing similar to the radial gaps that would exist in graphite fuel elements. All capsule experiments have been under accelerated conditions, which achieve full exposure in 8 to 15 months. In contrast, testing in prototype reactors such as Peach Bottom or the Dragon Reactor has been carried out at heat flux and burnup rates similar to or lower than those proposed for large power stations. The range of test conditions for irradiation experiments is illustrated by the data in Table 5.

After irradiation, fuel rods are recovered from the graphite fuel block or element and examined visually, by dimensional inspection, and finally by destructive examination such as preparation of metallographic sections. Experience has shown that properly formed and carbonized fuel rods that have the matrix formulation given above will survive irradiation without severe loss of bond strength. All fuel rods shrink to some extent under irradiation until a high exposure is reached. Then the matrix materials and coatings begin to swell as irradiation creates voids. This initial shrinkage is a function of the rate at which the coatings themselves change under irradiation.

---

[6]D. P. Harmon and C. B. Scott, *Development and Irradiation Performance of LHTGR Fuel*, GA-A13173 (October 1975).

Table 5. Characteristics of Available Irradiation Facilities

Reactor	Instrumented	Time to Full Fluence, years		Available Height		Fuel Holes per Test Element
		>0.18 MeV	<0.414 MeV	(m)	(in.)	
HFIR[a]						
Target	No	0.2	0.2	0.38	15	1
Removable Be	Yes	0.5	0.5	0.38	15	1
Removable Be[b]	Yes	4.5	0.9	0.38	15	1
ORR[c]	Yes	1.0	2.0	2.44	96	4
Fort St. Vrain	No	6	6	4.57	180	whole block
Dragon[d]	No	4		1.42	56	6
Peach Bottom (RTE)[d]	No	6		7.32	288	8

[a]One cycle is about 23 days.

[b]Never used for full experiment.

[c]Oak Ridge Research Reactor, E-7 postion, cycles are 55 days with 5 days down.

[d]No longer operating.

Generally speaking, fuel rods that contain a large fraction of Triso-coated particles (i.e., particles containing SiC barrier coatings) shrink very little under irradiation (1 to 2%). In such cases the gap between fuel rod and graphite element is sufficiently constant to avoid a sharp increase in operating temperature.

Graphite Material Requirements

Graphite for the fuel element blocks and for the reflector and support structures for the core also has very special requirements. The graphite must have good dimensional stability to ensure that the coolant will flow properly through the core and that operational and shutdown stresses will not exceed allowable limits. The graphite should have good thermal properties and good resistance to corrosive action by coolant impurities. Finally, the graphite should have a reasonably high density and good purity to ensure neutron economy within the fuel cycle operation. The structural graphite developed and used for the first demonstration reactor, the Fort St. Vrain, was an isotropic extruded grade containing needle coke and designated H-327. This type of graphite was very extensively tested and qualified for use in the Fort St. Vrain Reactor. The Fort St. Vrain Reactor fuel element block is essentially the same overall size as the large element for the power reactor fuel element block, but it contains somewhat more fuel and coolant holes because of the more conservative design of the system.

Subsequent to the production of the graphite fuel for the Fort St. Vrain Reactor and loading of the reactor, improved grades were developed for use in larger stations. These grades of graphite consist of H-451 developed by the Great Lakes Carbon Company in the United States and grade AS2 developed by Sigri in Germany. In addition, other candidate graphites developed by the manufacturers are presently under testing and qualification.

Irradiation testing of these graphites consists of measurement of changes of the dimensions, modulus of elasticity, strength, thermal expansion, thermal conductivity, and finally the creep coefficients for the graphite as functions of temperature and radiation exposure. These experiments[7] are being carried out in test reactors at accelerated rates and at temperatures from 400 to 1400°C. Exposures in these experiments and the fuel experiments are similar in that maximum exposures will be about 9×10^{21} neutrons/cm^2. At the present time, grade H-451 is well qualified to exposures up to about 70% of the design maximum exposure, and certain other grades are qualified at lower exposures. There is every reason to believe that the graphites selected will withstand radiation exposures even higher than the maximum levels projected for the HTGR.

---

[7]G. B. Engle, M. R. Everett, and W. P. Eatherly, "Status of Graphite Technology and Requirements for HTGRs," *Gas-Cooled Reactors: HTGR and GCFBR, May 7–10, 1974, Gatlinburg, Tenn.*, CONF-740501, pp. 288–305.

Pebble-Bed Reactor Fuels

The second type of reactor system for large HTGRs uses pebble-type fuel elements. The prototype system for this reactor is the AVR, which has been operating successfully at Jülich, West Germany, since 1967. Fuel elements for the system are shown in Fig. 5. The element has a diameter of 6 cm and has an outer fuel-free graphite shell and fuel particles dispersed in a matrix of graphite in the central portion. Recently, the AVR has been operated at increasing temperatures and has just completed more than one year of operation at an outlet helium temperature of 950°C. This is an exceedingly important demonstration of the potential use of this type of reactor for high-temperature process heat systems. The larger demonstration reactor now being built in Germany, the 300-MW THTR, employs similar fuel elements. This similarity is one advantage of the pebble-bed system.

The fuel elements for the first core of the AVR were manufactured in the United States under contract with Union Carbide Corporation. At the time the specification and qualification testing for the first core was done, molding operations for fuel manufacture were not well advanced. Consequently, it was decided to manufacture the fuel with a machined shell of graphite.[8] The machined shell was 1 cm thick and made of type ATJ graphite, which has good radiation stability and reasonable purity. These machined shells were then filled with a matrix containing resin binder, graphite flour, and coated particle fuel. The mix was pressed into place by an injection molding process such that good contact

---

[8]M. N. Burkett, W. P. Eatherly, and W. O. Harms, "Fueled Graphite Elements for the German Pebble-Bed Reactor (AVR)," *High Temperature Nuclear Fuels (Symposium held in Delavan, Wisconsin, October 1966) Met. Soc. Conf.* 42, ed. by A. N. Holden, Gordon & Breach, New York, 1968, pp. 45–64.

Photo-96235

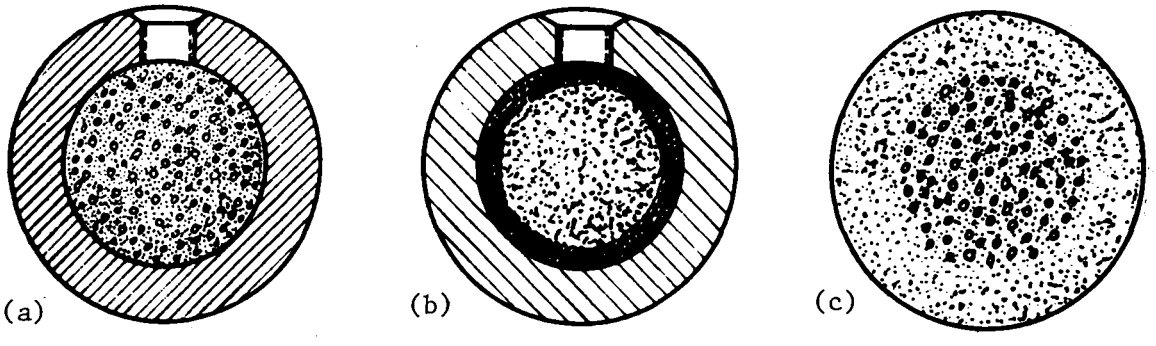

Fig. 5. Types and Numbers of Fuel Elements Presently Used in the AVR. (a) First charge; (b) second charge; (c) third charge and THTR.

was maintained after carbonizing and curing. Performance of the fuel elements from this first loading has been remarkably good. Design burnup and exposure of these elements were 9% FIMA, whereas some of these elements are still undergoing irradiation in the reactor and have exceeded the design burnup by almost 100%. As expected, at such high burnup they produce very little power but on the other hand they continue to operate without particle failure.

Since the first loading of the reactor, fabrication development and testing of molded fuel spheres has proceeded to the extent that makeup loading of the reactor is now carried out routinely with molded spheres produced in Germany. These spheres are molded in two operations: the core region containing fuel is premolded, and an unfueled graphite and resin mixture is then molded around the fuel portion and finally compacted to produce a dense graphite sphere. After carbonizing and curing, these spheres are machined to the required dimensional tolerance.

Testing and qualification of these fuel spheres is similar in many respects to that of the fuel rods for the large steam-cycle reactor in the United States. Machined shell and molded spheres were tested in capsule experiments both at Oak Ridge and by the German laboratories. In addition, columns of the molded spheres were tested in the Dragon Reactor at much lower exposure rates before test loadings were added to the AVR core.

Coated Particle Fuel for Thorium Cycle Systems

The fuel for thorium-cycle HTGR stations consists of coated fissile and fertile particles. Similar fissile and fertile particles are used in both the prismatic and pebble-bed systems at present. The fertile kernel is about 500 μm in diameter with a two-layer carbon coating, while the fissile particle is somewhat smaller and has a more complicated coating containing a silicon carbide barrier layer.

The fissile particles contain only uranium that is highly enriched in ^{233}U or ^{235}U, and its design maximum burnup is greater than 75% FIMA. The fertile particle, on the other hand, contains only thorium as ThO_2 and is exposed to a maximum burnup of about 8% FIMA. The much higher concentration and activity of fission products in the fissile particle makes the silicon carbide layer necessary as a barrier to the diffusion of highly mobile species of fission products, such as cesium, strontium, and silver. The development of technology for the coated particle fuels is reported in detail elsewhere[9] and is summarized in the following sections.[10,11]

---

[9] O. M. Stansfield, *HTGR Fuel Design and Performance*, GA-A13072 (July 1974).

[10] General Atomic Company, *HTGR Fuels and Core Development Program Quart. Progr. Rep. Feb. 29, 1976*, GA-A13804.

[11] P. R. Kasten and J. H. Coobs, *HTGR Base Program Progr. Rep. Jan. 1, 1974, through June 30, 1975*, ORNL-5108 (in preparation).

Kernel Fabrication

The kernels for the fertile particles are prepared by one of several sol-gel methods from thoria sol. In the ORNL water-extraction method,[12] stable thoria sols with a concentration of 2.5 *M* are passed through a nozzle to form a stream of droplets. The droplets are passed through a column of hexanol for extraction of water to harden the droplet into gel spheres, which are then dried and sintered at 1100°C. An important feature of the process is the technique developed for breakup of the sol streams using an imposed vibration on the sol in the capillary of the nozzle. Droplets very uniform in size are produced by adjusting the frequency of the vibrator to the natural frequency of drop formation at the orifice of the nozzle. Thoria microspheres produced by this technique have average diameters within 1% of the specified diameter, and the standard deviation of the size distribution is generally not greater than 5 to 10 μm for 500-μm-diam particles as shown in Fig. 6.[13] Production of ThO_2 gel microspheres using nozzles of this type is now a routine operation by industrial participants in the Gas-Cooled Reactor Program.

---

[12]P. A. Haas, *Process Requirements for Preparing ThO_2 Spheres by the ORNL Sol-Gel Process*, ORNL-TM-3978 (December 1972).

[13]P. A. Haas and W. J. Lackey, *Improved Size Uniformity of Sol-Gel Spheres by Imposing a Vibration on the Sol in Dispersion Nozzles*, ORNL-TM-4094 (May 1973).

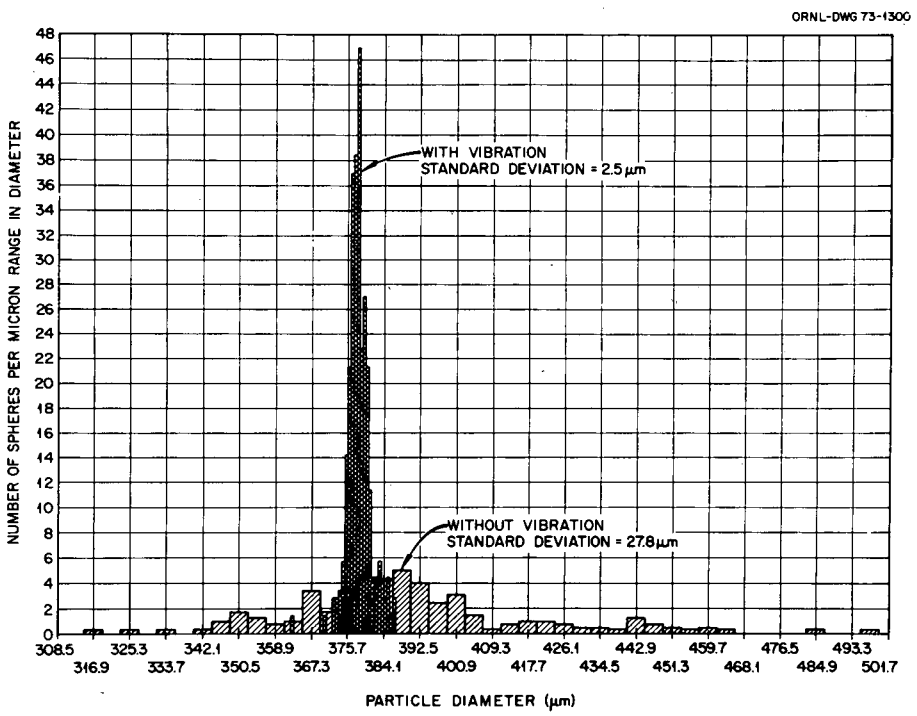

Fig. 6. Comparison of Size Distribution of ThO_2 Microspheres Made With and Without Vibration.

Particles for the fissile kernels of HTGR fuels are prepared by loading weak acid resin (WAR) microspheres with uranium.[14] The reasons for selecting this particle and the performance criteria that it must fulfill are explained later in the report under "Performance Applications." Preparation of these particles begins with the resin microspheres, which are acrylic acid divinylbenzene copolymers. Microspheres of these resins in the Na^+ form are upgraded by screening and shape separating to obtain the size fraction needed and to remove nonspherical particles. The carefully sized spheres are then loaded by contact with a uranium solution. For fresh fuel, an acid-deficient solution is obtained by reaction of HNO_3 with UO_3. For recycle fuel, the flowsheet employed uses uranyl nitrate solution with an acid deficiency produced by amine extraction, so that reaction equilibria are maintained as favorable for substitution of uranyl ions for hydrogen ion pairs in the resin material. By this means the resin spheres are loaded to essentially 100% of capacity, followed by washing and drying.

The dried, loaded resin microspheres are then heated in a fluidized bed to 1200°C to carbonize the resin.[15] The uranium is then present in the particles as UO_2 very finely dispersed in glassy carbon. The particles must be heated slowly during the carbonization cycle to retain sufficient residual carbon from the resin to give good control of density and porosity and to provide sufficient carbon for the subsequent conversion reaction. The carbonized particles are then transferred to another furnace for conversion in an argon fluidized bed.[16] The residual carbon derived from the resin is more than sufficient for complete reduction of the uranium oxide to carbide, but the process is controlled by heating for a limited time at intermediate temperatures to obtain only partial conversion so as to obtain the best performance of the resulting kernels. The conditions and rate of conversion in a fluidized bed furnace are shown in Fig. 7. The conversion operation is usually carried out at about 1600°C; at this temperature the required extent of conversion is achieved in less than 1 hr. The conversion step can produce kernels having a controlled composition over the range from 15 to 70% UC_2, with the balance of the uranium as UO_2. The density of converted kernels ranges from 3 to 3.5 g/cm^3.

---

[14]P. A. Haas, *HTGR Fuel Development: Loading of Uranium on Carboxylic Acid Cation-Exchange Resins Using Solvent Extraction of Nitrate*, ORNL-TM-4955 (September 1975).

[15]R. L. Beatty and E. L. Long, Jr., "Preparation and Performance of Coated Particle Nuclear Fuels Having $U.C_x.O_y$ Kernels," *12th Bienn. Conf. Carbon, Extended Abstracts and Program* (July 28–August 1, 1975, Pittsburgh, Pennsylvania). Co-sponsored by the American Carbon Society and the School of Engineering, University of Pittsburgh, pp. 315–16.

[16]D. R. Johnson, W. J. Lackey, and J. D. Sease, *The Effects of Processing Variables on HTGR Fuel Kernels Fabricated from Uranium-Loaded Cation-Exchange Resins*, ORNL-TM-4989 (August 1975).

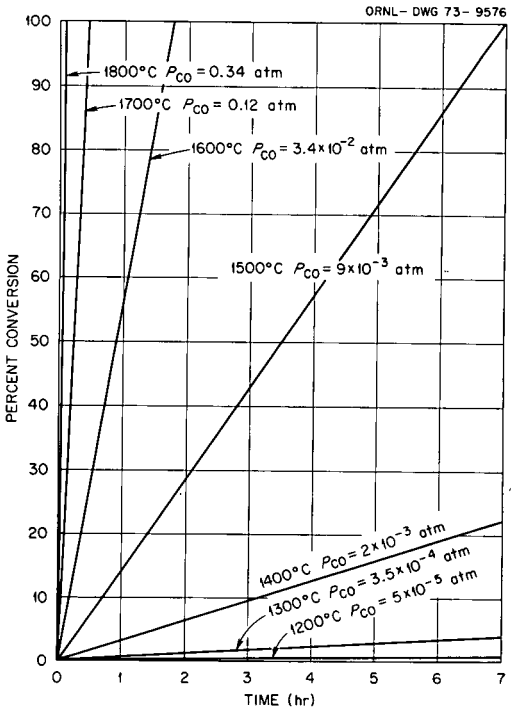

Fig. 7. Fluidized Bed Conversion of Uranium-Loaded Weak-Acid Resin from Oxide to Carbide. (Assumed equilibrium P_{CO} for reaction $UO_2 + 3C \rightarrow UC + 2CO$. Normalized to 0.05 liter/min of sweep gas per g of U.) To convert pressures to pascals, multiply by 1.01×10^5.

Coating Preparation

The design of coatings for particles was shown previously in Fig. 4. The coating for the fertile particles is a simple two-layer carbon structure, whereas the fissile particle has a more complicated coating containing a barrier-type silicon carbide layer. These coatings must contain the fuel and the gaseous fission products throughout the exposure of the fuel element. Particularly in the case of the fissile particles, the coatings must retain those fission products that easily migrate or diffuse through carbon coatings, such as cesium and strontium. The carbon coatings must for this reason have high density and low permeability, and must be as nearly isotropic in structure as possible to avoid failure by severe stresses induced by fast-neutron damage.[17,18] The SiC layer must have high density and be free of inclusions or porosity to avoid permeation by fission products.

---

[17] J. W. Prados and J. L. Scott, "The Influence of Pyrolytic-Carbon Creep on Coated Particle Fuel Performance," *Nucl. Appl.* 3: 488–94 (1967).

[18] J. L. Kaae, "A Mathematical Model for Calculating Stresses in a Four-Layer Carbon-Silicon-Carbide Coated Fuel Particle," *J. Nucl. Mater.* 32: 322–29 (1969).

The coatings on the particles are deposited in a fluidized bed at temperatures ranging from 1100 up to 1600°C. Fluidized beds for particle production operations range from 0.13 to 0.23 m (5–9 in.) in diameter and will accommodate charges of from 3 to over 10 kg of kernels.[19] Much smaller laboratory-type coaters have been used for research and development on the deposition conditions and properties of coatings. A fluidized bed, associated gas metering, and off-gas treatment system are shown in Fig. 8.

The first layer (low-density buffer coating) is deposited from acetylene at about 1100°C, with a high concentration of hydrocarbon used in the fluidizing gas.[20] The second layer of the coating (the high-density isotropic pyrolytic carbon) is usually deposited at about 1300°C from a mixture of propylene and acetylene, or from propylene by itself.[21] The hydrocarbon is usually diluted to some extent with an inert fluidizing gas. The intermediate barrier layer of SiC may be deposited in the same operation, with methyltrichlorosilane used as the source of the SiC. This operation is normally carried out at about 1600°C.[22]

After the coating operation, the batch of particles is subjected to several classification and characterization operations to qualify it for further use in irradiation testing or fuel element fabrication. Classification operations involve separation of oversized or irregular particles, followed by sampling to obtain specimens for microradiography, for metallographic examination of structure and anistropy, and for the measurement of density of the various coating layers.

Particle Performance Experience

Excellent performance of particles can be assured if proper attention is given to all phases of design, qualification, and inspection before irradiation of the fuels. Excellent performance has been observed for these types of particles in numerous experiments, including many accelerated tests in HFIR, ORR, and GETR capsules.[23] Good experience has

---

[19]W. J. Lackey, W. H. Pechin, and J. D. Sease, "Measurement and Control of Shape of Fuel Particles for High-Temperature Gas-Cooled Reactors," *Am. Ceram. Soc. Bull.* 54: 718–24 (1975).

[20]H. Beutler, R. L. Beatty, and J. H. Coobs, "Low-Density Pyrolytic-Carbon Coatings for Nuclear Fuel Particles," *Electrochem. Technol.* 5: 189–94 (1967).

[21]R. L. Beatty, J. L. Scott, and D. V. Kiplinger, *Minimizing Thermal Effects in Fluidized-Bed Deposition of Dense, Isotropic Pyrolytic Carbon,* ORNL-4531 (April 1970).

[22]T. D. Gulden, "Deposition and Microstructure of Vapor-Deposited Silicon Carbide," *J. Am. Ceram. Soc.* 51(8): 424–27 (1968).

[23]D. P. Harmon and C. B. Scott, *Development and Irradiation Performance of LHTGR Fuel,* GA-A13173 (October 1975).

ORNL-DWG 74-378R

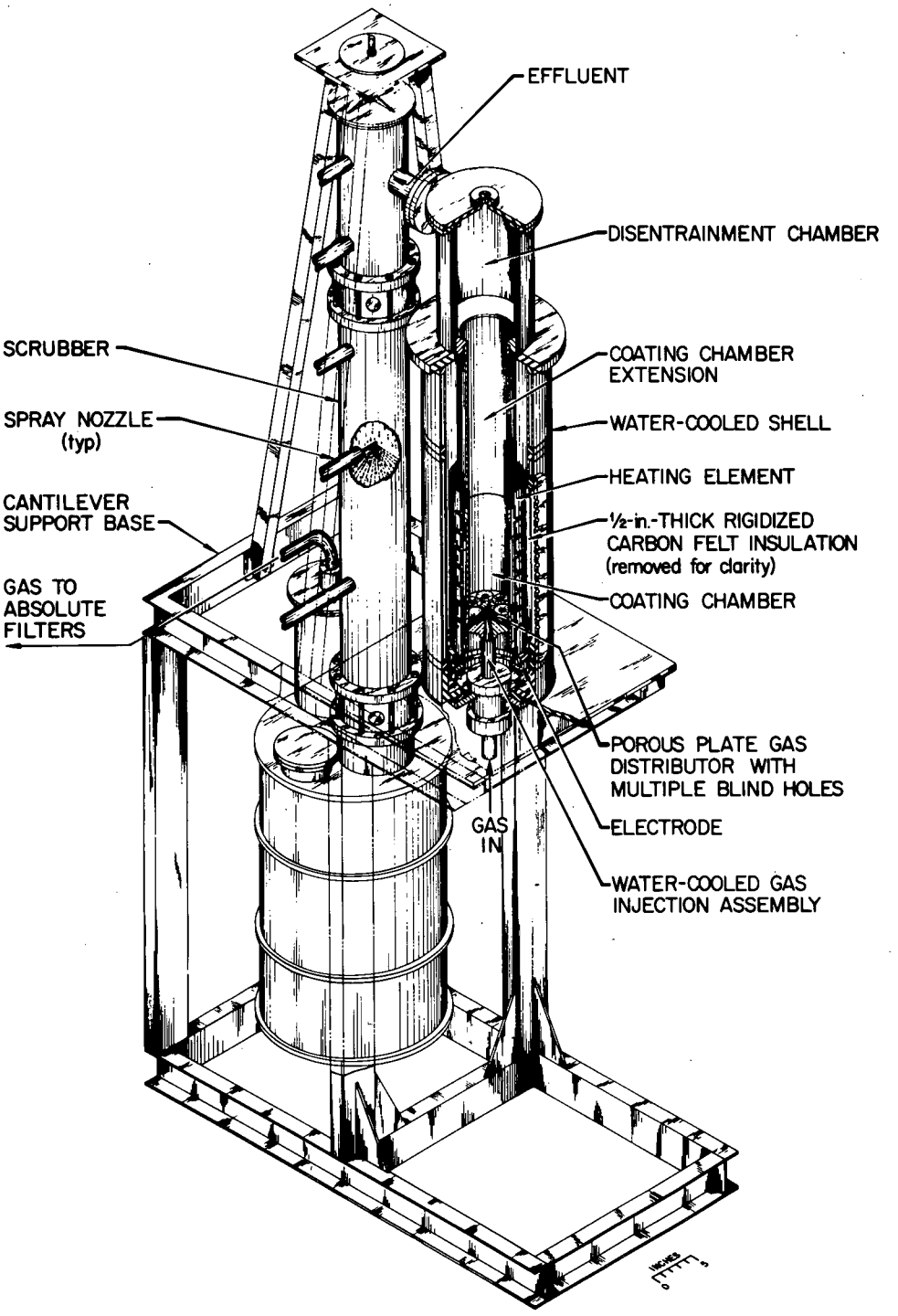

Fig. 8. Engineering-Scale Coater.

also been observed in so-called "real-time" testing in experimental fuel elements in the Peach Bottom and Dragon Reactors. These test elements reached only partial exposure before the two test reactors were decommissioned, so further "real-time" testing must await start-up of Fort St. Vrain.

The mechanisms by which coatings on coated particles may fail may be listed as follows:[24]

1. pressure vessel failure,
2. fabrication defects,
3. radiation-induced stresses in the coatings,
4. matrix-coating interaction,
5. fuel migration (so-called amoeba effect), and
6. fission product interactions with the coatings, including chemical attack and mechanical interaction.

The means by which these failure mechanisms may be controlled and avoided are explained in the following paragraphs.

1. Failure by internal pressures may be avoided by careful attention to the design of the coatings. The internal pressures are derived from fission gases, oxidation of carbon, and swelling of the fuel during irradiation, and such pressure buildup may be avoided by suitable allowance of void volume within the pressure-retaining layers of the coatings. This is normally accomplished by deposition of a fairly thick layer of low-density or buffer-type coating directly on the kernel. For the dense thoria microspheres used for fertile kernels, this initial layer is about 75 μm thick. In the case of the fissile particles the low-density kernel itself is quite porous so that a thinner low-density buffer coating may be used without affecting the performance of the particle. Buffer coatings on WAR-derived particles may be 30 to 50 μm thick.

2. Fabrication defects as a failure mechanism must be controlled by careful attention to inspection and quality control of the coated batches. Such defects as permeable coatings or partially missing coating layers may contaminate the coated batches, and their frequency must be minimized to achieve successful performance.

3. Radiation-induced stresses in the coatings normally occur because of fast-neutron-induced distortions of the pyrocarbon coatings that may lead to significant stress buildup in the coating layers and cause cracks to propagate through the coating. This phenomenon may be avoided by careful attention to the density and anistropy of the pyrocarbon layers. The structure of the pyrocarbon must be as nearly isotropic as possible to avoid failure due to fast neutron damage.[25]

---

[24] C. L. Smith, *Fuel Particle Behavior Under Normal and Transient Conditions*, GA-A12971 (October 1974).

[25] T. D. Gulden, J. L. Scott, and C. Moreau, "Present Thorium-Cycle Concepts and Performance Limitations," *Gas-Cooled Reactors: HTGR and GCFBR, Gatlinburg, Tenn., May 7–10, 1974*, CONF-740501, pp. 176–200.

4. Failure of coatings by interaction with the matrix has also been observed and may be controlled by careful attention to the coke content and microporosity of the carbonized matrix and to the surface characteristics of the outer coatings.[23] The coke material that is derived from the pitch in the matrix will generally shrink severely during irradiation. If the matrix has very little microporosity, it may form a strong bond to the surface of the outer coating layer. In this case shrinkage of the matrix may initiate cracks within the outer coating and eventually lead to complete failure of coatings. This phenomenon may be avoided by careful control of the carbonizing conditions in fuel rod fabrication to produce at best 30% microporosity in the matrix or to reduce the fraction of coke in the matrix material. Heating the fuel rods in an environment under which the gaseous materials from the matrix can escape readily will generally lead to lower fractions of coke in the matrix. This is desirable to avoid interaction with the coating, although such a matrix will have low density and low thermal conductivity.

5. Thermal migration of fuel, or the amoeba effect, has been studied extensively, and results from many tests have been reported.[26,27] The early experiments showed that the effects of fuel migration in coated UO_2 particles are relatively severe, and these particles were therefore given lower priority for use as fissile particles. The relative stability of thorium oxide suggested that dilution of UO_2 with thoria would stabilize the oxide system. However, continued testing of mixed oxides of variuous thorium-to-uranium ratios showed that the migration rate, although reduced, was still higher than desired. This effect is illustrated in Fig. 9. The ThO_2 kernels for the fertile particles and also the UC_2 particles that made up the initial fissile loading for such reactors have acceptable migration rates, as also shown in the figure. Of great importance is the fact that no migration of this type has been observed in partially converted kernels derived from WAR. Fissile kernels of this type generally react with and consume the buffer layer of the coatings, and after irradiation are observed to be in contact with the inner carbon coating layer. However, the direction of this movement has no relation to the thermal gradient within the fuel rod.

6. An important failure mechanism was discovered more recently during high-burnup testing of UC_2 fissile particles. This involves fission product interaction with the coating layer; the phenomenon may take the form of mechanical interaction of fission products with all coating layers, or chemical attack on the SiC layer by certain rare

---

[26] T. B. Lindemer and R. L. Pearson, *Thermal Migration for HTGR Fuels from the Th-U-O-C-N System*, ORNL/TM-5207 (April 1976).

[27] O. M. Stansfield, C. B. Scott, and J. Chin, "Kernel Migration in Coated Carbide Fuel Particles," *Nucl. Technol.* 25: 517 (1975).

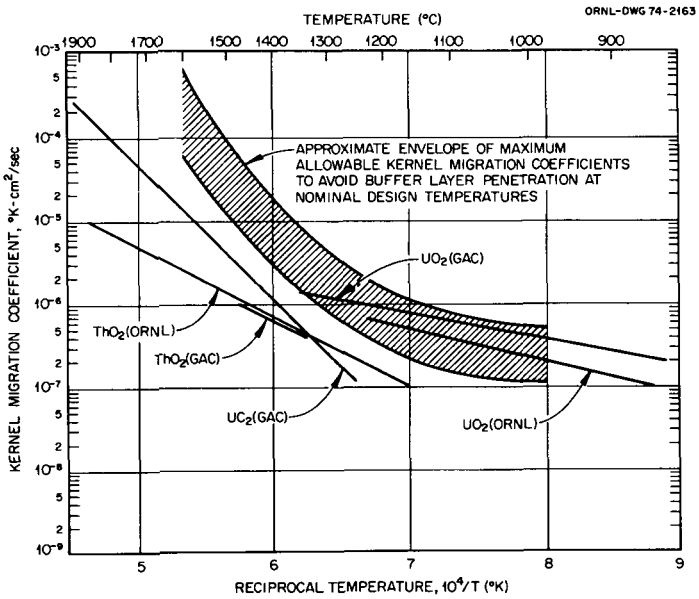

Fig. 9. Average Kernel Migration Coefficients for UC_2, UO_2, and ThO_2.

earth fission products.[28,29] Rare earth fission products — including cerium, neodymium, praseodymium, and lanthanum — were concentrated on the cool side of the particles containing UC_2 kernels that were irradiated in a temperature gradient, as shown in Fig. 10. The concentration of these on the inner surface of the SiC barrier coating led to attack and even complete penetration of the SiC layer. In other cases, the concentration of fission products on the cool side produced distortion and mechanical stresses on the coatings that led to rupture of all coating layers. An example of this is shown for the 100%-converted WAR particles in Fig. 11.

A series of irradiation tests on various compositions of WAR particles ranging from complete oxide to those completely converted to carbide showed that intermediate compositions or compositions high in oxide did not show this type of interaction with the coating, as illustrated in Fig. 11. This behavior is consistent with the fact that such coating interactions with fission products were not observed in any case during high-burnup testing of UO_2 or mixed oxide particles. Apparently the rare earth fission products are stabilized as oxides so that they are found in conjunction with

---

[28]R. L. Beatty and E. L. Long, Jr., "Preparation and Performance of Coated Particle Nuclear Fuels Having $U.C_x.O_y$ Kernels," *12th Bienn. Conf. Carbon, Extended Abstracts and Program* (July 28–August 1, 1975, Pittsburgh, Pennsylvania). Co-sponsored by the American Carbon Society and the School of Engineering, University of Pittsburgh, pp. 315–16.

[29]D. P. Harmon and C. B. Scott, *Development and Irradiation Performance of LHTGR Fuel*, GA-A13173 (October 1975).

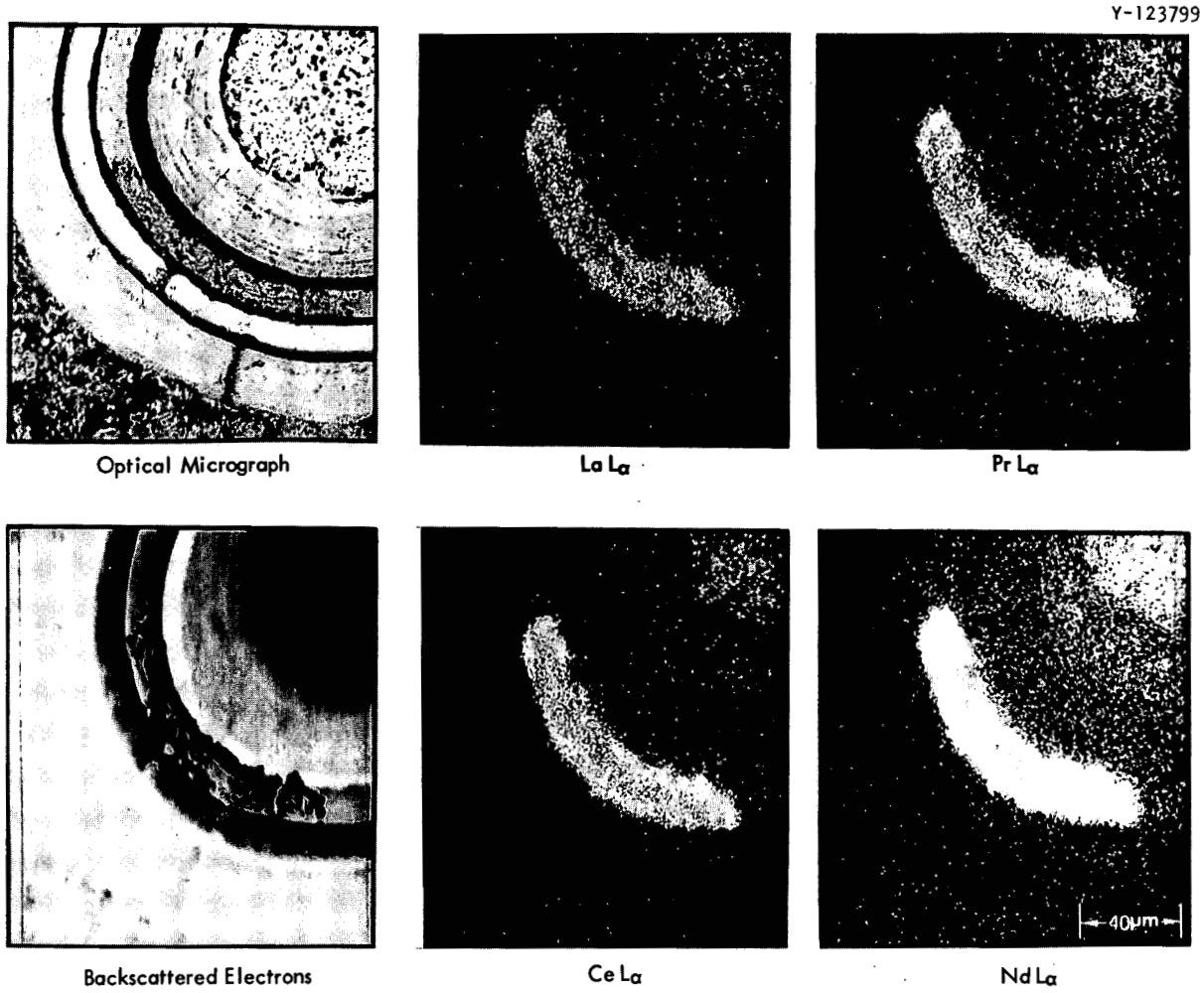

Fig. 10. Rare Earth Fission Products Found on Cold Side of Triso-Coated Dense UC_2 Kernel from RET-4.

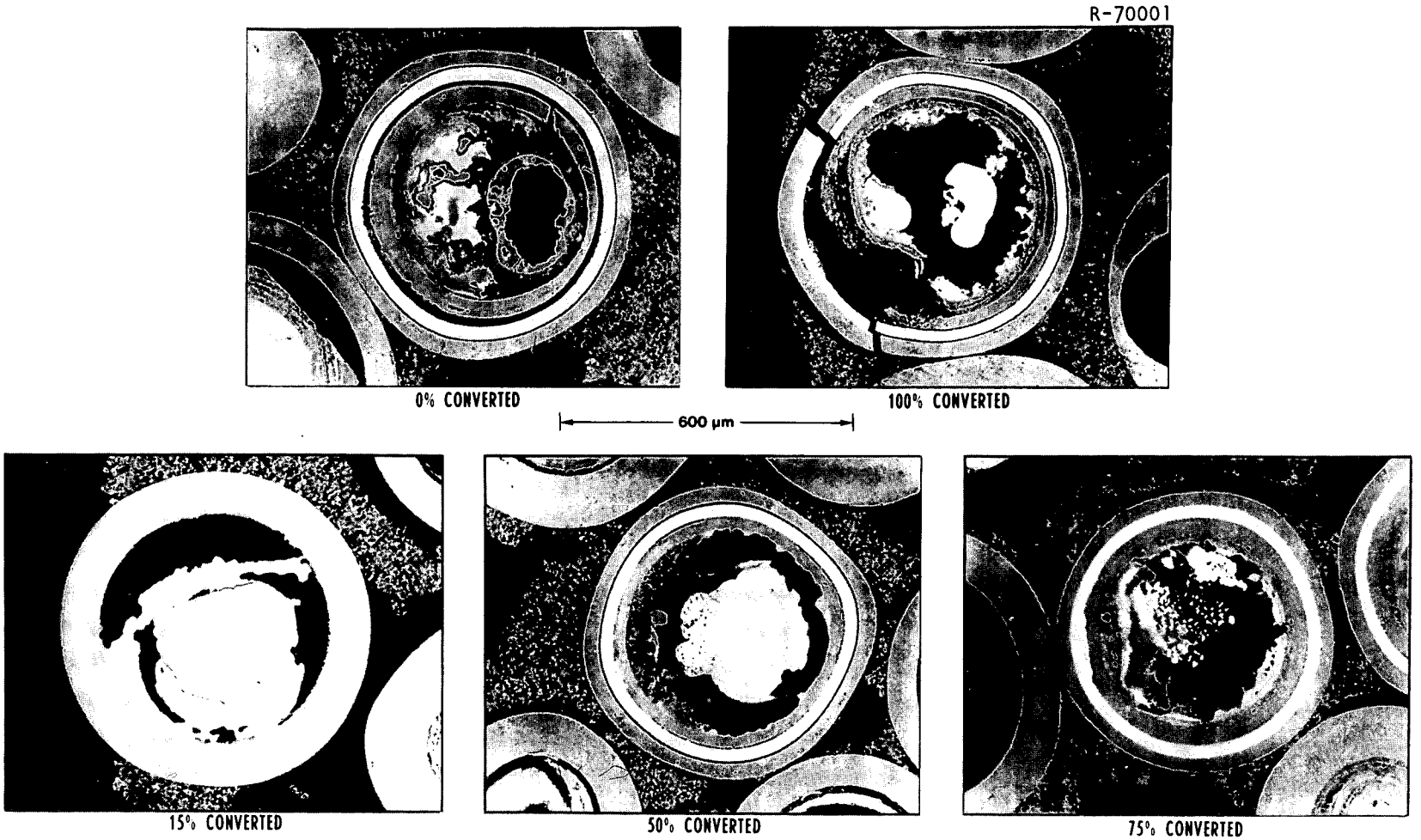

Fig. 11. Relative Performance of WAR Kernels Converted Within the Range of UO_2 to UC_2. Irradiated in HRB-10. Maximum design fuel temperature, 1500°C; burnup, 80% FIMA; fast (>0.18 MeV) fluence, 4.3 to 5.0 × 10^{21} n/cm^2.

urania in the kernel after irradiation. A study of the thermodynamic equilibria in the system during irradiation and after exposure confirmed this behavior. The results of a series of calculations showed that kernels having from 15 to 70% carbide would have acceptable performance. The results of the performance testing under irradiation are consistent with these calculations.[30]

ADVANCED HTGR APPLICATIONS

Designs proposed for advanced systems, such as the process heat or direct-cycle systems,[31–33] will require higher average fuel temperatures than the steam-cycle reactor core. Indications are that the present reference fuel for the steam-cycle system has the potential for performance at higher temperatures and more extreme conditions than are presently required. This is based on the good performance of the thoria and the WAR-derived particles in many experiments at temperatures up to 1500°C. The development of fuels for advanced systems then should follow three steps: (1) The present fuel particles for the reference steam-cycle system would be adopted and used for modified elements designed for advanced reactors. (2) The reference particles would be modified to improve their performance; such modifications would include additions to the kernel to reduce fuel migration and stabilize fission products and modifications of coating designs to reduce thickness while maintaining strength. (3) The design of the fuel element could be modified so that new and more appropriate fabrication techniques could be utilized.

Some preliminary tests of extruded fuel rods have shown very good performance. These tests were carried out in three instrumented capsules in HFIR, as part of the series called the HRB capsules.[34,35] In capsules HRB-4 and -5, the fuel rods contained WAR particles almost completely

---

[30]F. J. Homan, E. L. Long, Jr., R. L. Beatty, T. N. Tiegs, and T. B. Lindemer, "Development of a Recycle Fuel for the HTGR," paper to be submitted to *Nuclear Technology*.

[31]General Atomic Company, *High Temperature Nuclear Heat Source Study*, GA-A13158 (December 1974).

[32]A. E. Kakretz, P. M. Tschamper, *The VHTR for Process Heat*, GEAP-14018 (September 1974).

[33]Westinghouse Astronuclear Laboratory, *The Very High Temperature Reactor for Process Heat, A Technical and Economic Assessment*, WANL-2445-1 (September 1974).

[34]F. J. Homan et al., *Irradiation Performance of HTGR Fuel Rods in HFIR Experiments HRB-4 and -5*, ORNL-5115 (June 1976).

[35]F. J. Homan et al., *Irradiation Performance of HTGR Fuel Rods in HFIR Experiment HRB-6*, ORNL-TM-5011 (December 1975).

converted to UC_2, whereas in capsule HRB-6 the extruded rod specimens contained mixed-oxide particles. Performance of these fuel rods was excellent, and the fissile and fertile particles in those extruded rods performed better than particles from the same batches exposed in intrusion-bonded fuel rods in the same experiments. In each case the better performance can be attributed directly to the higher conductivity of the extruded rods. It is evident that further development of extruded and molded fuel rods would do much to enhance the performance of the fuel particles. This technique for enhanced performance is under further development, and specimens are being tested in HFIR experiments in collaboration with LASL.

Other preliminary experiments indicate that much better performance could be obtained by modifying the coating layers of the particles to include thicker SiC layers or perhaps zirconium or silicon mixed or alloyed with the dense pyrocarbon layer. Such coatings have much higher strength and good irradiation resistance; in principle, then one could have fewer coating layers and a thinner overall coating, and thereby increase the loading of fuel in a fuel rod without increasing the volume fraction of coated particles. Development and testing of such modified and high-strength coatings has been initiated in various small programs[36,37] and development will continue as the objectives of the advanced HTGR programs are more clearly identified.

Alternatively, one could completely redesign the fuel elements to include a directly cooled fuel rod within a coolant channel of the element. In this case the fuel element block could be essentially the same overall size as the present graphite moderator block but would have fewer holes. The preferred method for fabrication in this instance would be by extrusion since the fuel rods would need to be much longer and stronger, and could be produced at a high rate by this technique.[33] A coextrusion technique for preparing such rods with an inert surface layer has been demonstrated for other applications. Such a fuel would in principle have much higher performance capability than the standard steam-cycle fuel.

FUEL CYCLE DEVELOPMENT

As previously mentioned, the most attractive fuel cycle for the HTGR is the Th-^{233}U cycle. Accordingly, it is the only fuel cycle on which significant development work has been done. Therefore, this section of the report will deal primarily with developments of process

---

[36] J. L. Kaae, "Microstructures of Pyrolytic-Carbon/Silicon Carbide Mixtures Co-Deposited in a Bed of Fluidized Particles" *Carbon* 13: 51–53 (1975).

[37] P. Wagner, C. M. Hollabaugh, and R. J. Bard, "ZrC, A Key Ingredient for High Temperature Nuclear Fuels," paper IAEA-SM-200/18 at International Symposium on Gas-Cooled Reactors with Emphasis on Advanced Systems, Oct. 13–17, 1976, Jülich, West Germany (to be published in Proceedings).

technology and equipment for the Th-^{233}U fuel cycle. Concentration is on U.S. work,[38,39] but significant work is also being done by the Federal Republic of Germany, particularly in reprocessing and waste treatment technology.[40]

Fuel Cycle Operations

Presented in Fig. 12 are the principal operations and nuclear material flow in the Th-^{233}U fuel cycle for the HTGR.[41] In operating the fuel cycle a new reactor is charged with ^{235}U and thorium, part of which will be converted to ^{233}U by neutron capture. The ratio of thorium to ^{235}U is about 10. The ^{235}U is contained in a fissile particle, while the thorium is present in the fertile particles. Upon completion of the planned burnup, which is usually about 90% of the ^{235}U present, the fuel is discharged, cooled for radioactive decay up to six months, and then shipped for reprocessing. The various isotopes and fission products are separated during reprocessing. As previously noted, the thorium goes to interim storage for decay of the ^{228}Th, the ^{235}U may be retired or recycled through refabrication, and the ^{233}U is sent to the refabrication facility.

Since the conversion ratio of HTGRs is less than 1, it is necessary to supply makeup fuel, which is anticipated to be identical fuel containing ^{235}U. However, makeup fuel can also be ^{233}U fron another reactor or possibly ^{239}Pu, as has been previously noted.

The Th-^{233}U fuel cycle is complicated by the fact that ^{232}U is also generated in HTGRs, and the ^{232}U has a relatively short half-life, decaying to ^{228}Th and, in a series of short-lived intermediates, to stable ^{208}Pb. The most significant of the intermediates are ^{220}Rn, which, being a gas, can be transported through filters, and ^{208}Tl and ^{212}Bi, both of which emit energetic gammas. The gamma activity associated with these intermediates must be accommodated in the refabrication facility, since it is not possible to separate the ^{232}U chemically from ^{233}U. Although the decay chain can be broken by use of an ion exchange cleanup, the activity does grow back sufficiently fast that shielded facilities are required for refabrication. In reprocessing the problems associated with ^{232}U decay product activity are superceded by the activity of the fission products that must be handled.

---

[38] A. L. Lotts and P. R. Kasten, *Thorium Utilization Program Progr. Rep. Jan. 1, 1974, through June 30, 1975*, ORNL-5128.

[39] General Atomic Company, *Thorium Utilization Program Quart. Progr. Rep. Feb. 29, 1976*, GA-A13833.

[40] E. R. Merz, G. Kaiser, and E. Zimmer, "Progress in Th-^{233}U Recycle Technology," *Gas-Cooled Reactors: HTGR and GCFBR, May 7–10, 1974, Gatlinburg, Tenn.*, CONF-740501, pp. 268–87.

[41] K. J. Notz, *An Overview of HTGR Fuel Recycle*, ORNL/TM-4747 (January 1976).

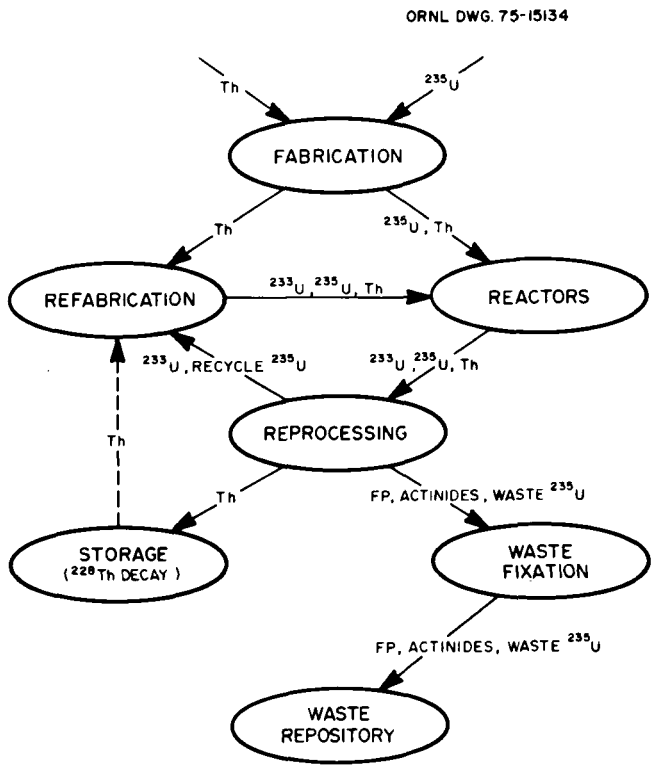

Fig. 12. Operations and Materials Flows in the HTGR Th-^{233}U Fuel Cycle.

Other activities of key importance in the fuel cycle are shipping, waste fixation, and, finally waste isolation in a repository. After fixation of the waste, the problems in waste isolation are very similar to those encountered in the fuel cycles for other reactors.

Process and Facility Requirements

Although HTGRs have recently experienced difficulty in commercial acceptance, any fuel cycle program must be directed toward solving the technical problems associated with a commercial-size fuel recycle facility. It appears that the advantages of scale can be realized in facilities having a range of capacity from 20,000 fuel elements per year to 50,000 fuel elements per year, based on reprocessing load. Figure 13 summarizes the principal flows to and from such a central HTGR recycle facility. Such a facility could provide the recycle needs for approximately 20 GW(e) installed HTGR capability. In Fig. 13, 20,000 fuel elements per year are reprocessed and, including the assumption of once-through recycle of ^{235}U, 10,000 fuel elements per year are refabricated. Further, as an additional note on Fig. 13, facilities would need to be provided for consolidation and isolation of the various waste streams.

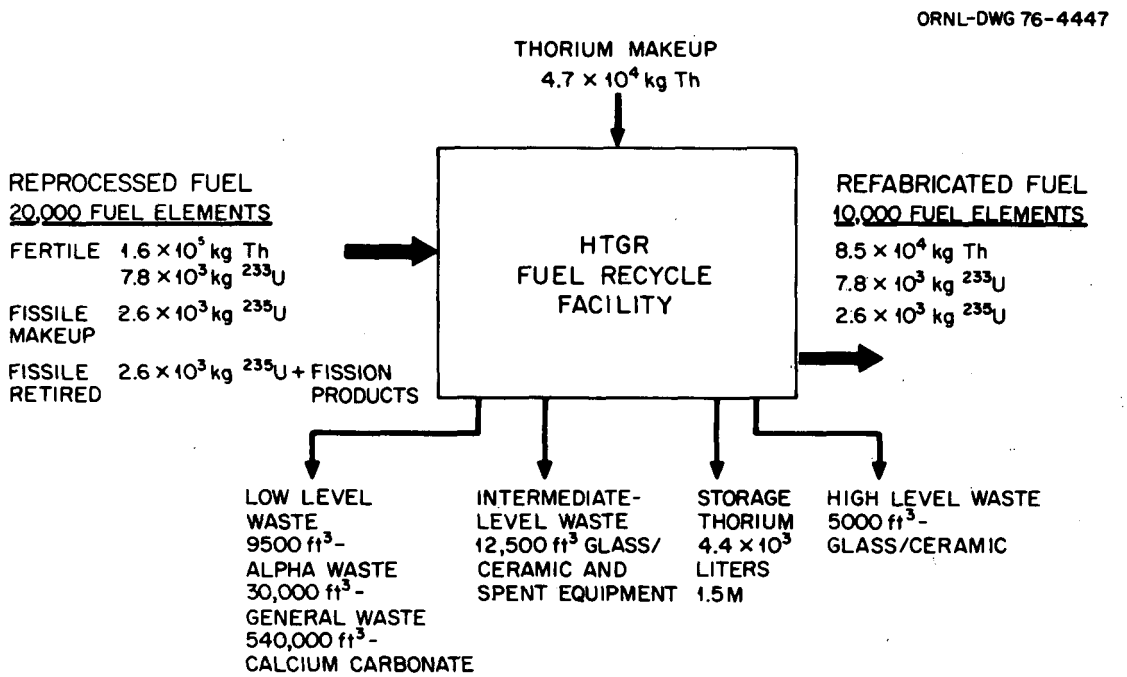

Fig. 13. Nominal Annual Materials Flow for a Central HTGR Fuel Recycle Facility.

A more detailed schematic of the processes required for a central HTGR fuel recycle facility is given in Fig. 14. In the reprocessing schematic, spent fuel elements are removed from storage at the facility and are first prepared for burning by a crushing operation (primary burning feed preparation). Primary burning eliminates most of the moderator and the outer coatings of particles. Particles are classified to separate ^{235}U from the thorium and ^{233}U. Particles having SiC coatings and to be recycled are then crushed and burned in a secondary burner. The uranium-thorium oxides are then dissolved and processed by solvent extraction. Large-scale operations are involved in the reprocessing flowsheet to handle the off-gases and the liquid and solid wastes.

In the refabrication part of the schematic, ^{233}U is introduced from reprocessing storage, it is decontaminated by ion exchange, if necessary, and the solution is adjusted chemically for loading onto ion exchange resin. The loaded particles are carbonized, converted to the proper stoichiometry, and then coated with various layers of pyrolytic carbon and silicon carbide. Following the particle coating, the fissile particles are combined with coated fertile particles prepared in other facilities and fed to the fuel rod fabrication step, where the particles are bonded together with a carbonaceous matrix. The fuel rods are placed into a premachined graphite fuel block, and the complete assembly is then cured in place at high temperature. Substantial operations in the refabrication flowsheet are involved with scrap treatment and waste treatment for off-gases, liquids, and solids.

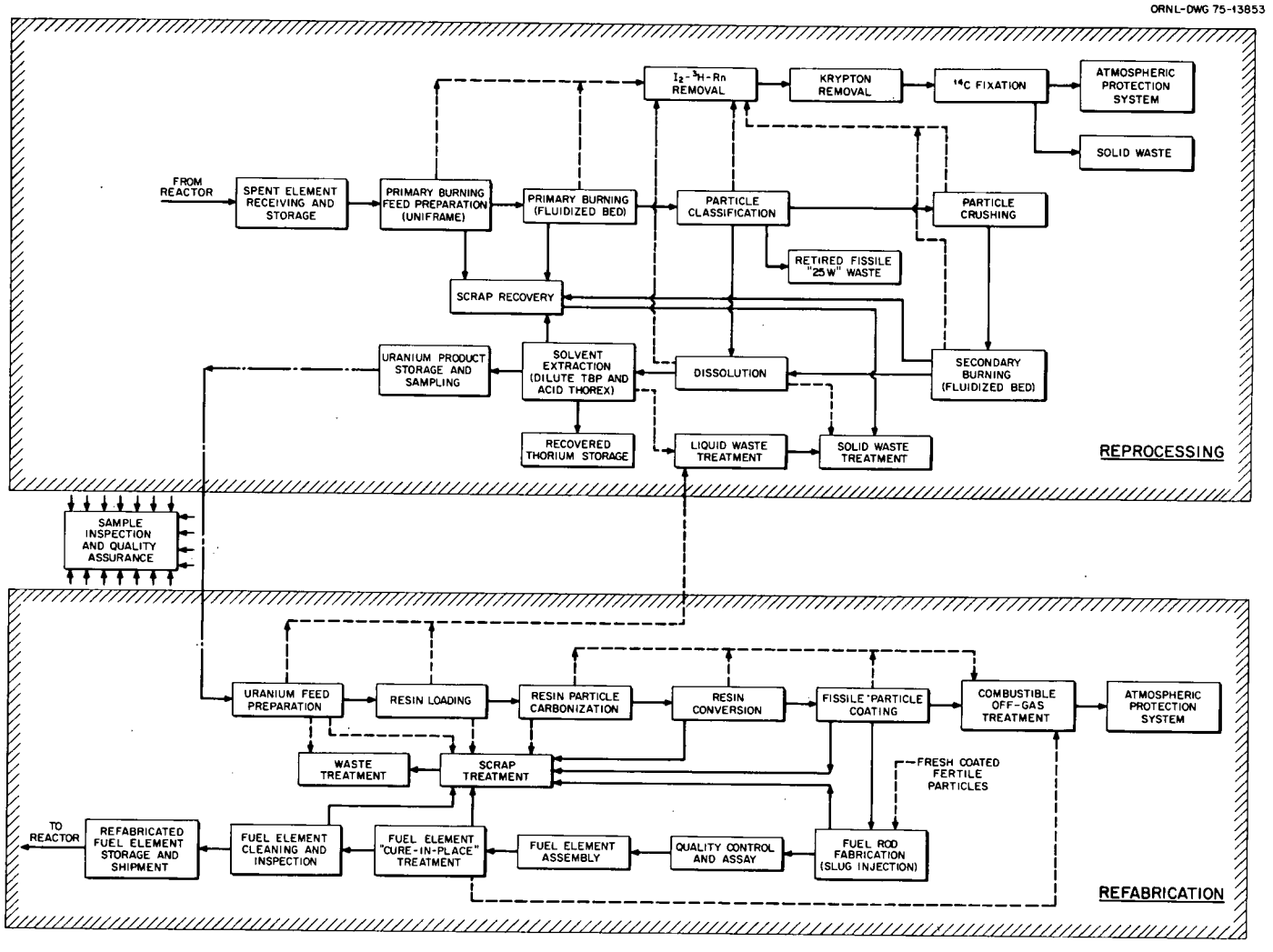

Fig. 14. Schematic Process Outline for a Central HTGR Fuel Recycle Facility.

To indicate the scale of the unit operations involved in the recycle facility and the number of components required for each unit operation, Tables 6 through 8 give the unit processing rate and the number of equipment items per line of equipment for reprocessing, refabrication, and waste management operations, respectively. Equipment size limitations are generally attributable to three factors: criticality limitations, process technology limitations, and reliability considerations. In Tables 6 through 8, not all unit operations are represented, but the tables do give the general range of capacities for typical major equipment. In Table 8, the capacity required for a recycle facility reprocessing 20,000 fuel elements per year is given. Unit processing rates that are possible are not established at this time; however, the daily unit rates required are judged to be within the capabilities of single units.

Program Development Logic

The Energy Research and Development Administration is conducting a program in which the overall objective is to provide a technological base so that commercial HTGR fuel recycle facilities can be designed, built, licensed, and operated with an acceptable private investment risk. The program is being carried out under the technical leadership of Oak Ridge National Laboratory with major participation by General Atomic Company and Allied Chemical Corporation. The current plans are to build a government-supported demonstration plant as the last phase of the program. Before design and construction of the demonstration plant, various developments are being conducted and will be conducted to obtain the necessary design information. The logic of the program is shown in Fig. 15. In Fig. 15, the terms hot and cold refer to the absence or presence of significant amounts of radioactivity. The objective of the cold and hot laboratory development is to prove process feasibility. The objective of cold and hot engineering development is to establish the space envelope for the process equipment and to assure process feasibility at the larger scale. Cold prototype development establishes in-cell equipment configuration, confirms process feasibility at full scale, and develops the necessary operating and maintenance procedures for start-up of the demonstration facility.

Although the foregoing is the logic of the conduct of the program, not all the phases are applied to each unit operation. In some cases, there is sufficient information to proceed directly to the larger scale development work. In general, however, the major technical areas of the program — that is, reprocessing, refabrication, and waste treatment — are subjected to the discipline of the program logic.

Status of Th-^{233}U Fuel Cycle Development

The status of the development program will be summarized according to the major functional areas: fuel handling, reprocessing, refabrication, and waste treatment.

Table 6. Principal Equipment Components Required in Reprocessing Operations

Component	Unit Rate (Elements/Year)	Number Required for Each Capacity[a]	
		10,000	20,000
Crushers	20,000	1	1
Primary burners	5,000	2	4
Dissolvers	2,500	4	8
Centrifuges	5,000	2	4
Particle Dryers	10,000	1	2
Jet grinders	10,000	1	2
Secondary burners	10,000	1	2
Solvent extraction	20,000	1	1
Off-gas system		1	1
Krypton Absorption Process	20,000	1	1

[a]In number of spent fuel elements processed per year.

Table 7. Principal Equipment Components Required in Refabrication Operations

Component	Capacity per Day	Number Required for each Capacity[a]	
		5,000	10,000
Acid-deficient feed preparation	60 kg U	1	1
Resin loader	20 kg U	2	4
Resin dryer	16 kg U	2	4
Resin Carbonizing furnace	10 kg U	3	6
Particle coating furnace	7 kg U	4	8
Fuel rod molding equipment	40,000 rods	1	2
Fuel element carbonizing furnace	16 fuel elements	2	4
Quality control system		1	1
Particle scrap recovery	10 kg U	1	2

[a]In number of fuel elements produced.

Table 8. Capacities Required by Waste Treatment Operations

Major Equipment	Daily Capacity Required for 20,000 Fuel Element/Year Facility
High-level waste calciner, m^3 (gal)	0.606 (160)
High-level waste calcine to glass/ ceramic converter, m^3 (ft^3)	0.85 (30)
Intermediate-level waste calciner, m^3 (gal)	1.21 (320)
Intermediate-level waste calcine to glass/ceramic converter, m^3 (ft^3)	1.70 (60)
Incinerator, m^3 (gal)	0.568 (150)
Solvent disposal, m^3 (gal)	0.568 (150)
Shredder, m^3 (ft^3)	11.33 (400)
Filter compactor, number of filters	10

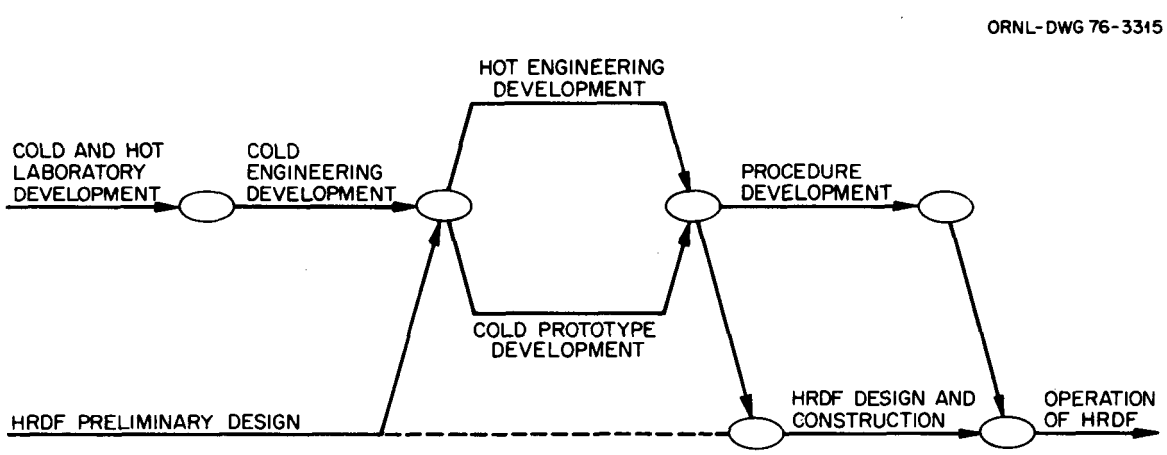

Fig. 15. Logic of Development Program Phases for the Design, Construction, and Operation of HRDF.

Fuel Handling

Fuel handling encompasses shipping and storage of spent and refabricated fuel elements. A surge capacity must be available at the recycle plant since the plant must operate on a sustained basis.

In general, HTGR fuels will be stored for up to six months at the reactor before shipment to the recycle plant. Because of long fuel cooling times and the low power density of HTGR cores, fuels pose no severe problems of fission product decay heat removal during shipment. The shipping casks have been designed and constructed by General Atomic Company for handling fully irradiated Fort St. Vrain HTGR fuel.

At the recycle facility the spent fuel will be stored in a shielded facility that can: (1) handle a low-level heat load, (2) retain the identity of individual fuel elements, and (3) store different types of fuel elements for purposes of campaigning the fuel in batches. The identification of elements is important in the fuel cycle — that is, the type of isotopes contained in the fuel — and in terms of ownership, since several utilities may be shipping fuel to a given recycle plant.

Regarding receiving and storage facilities, a small facility of the type required has been built at the Idaho Chemical Processing Plant. It will handle fuel from the Fort St. Vrain HTGR and has a storage vault capacity of about 2500 fuel elements. A commercial-scale facility might need a capacity of 10,000 to 20,000 fuel elements, cover an area of 4000 to 8000 m^2 (1–2 acres), and provide a heat dump capable of absorbing 4000 kW.

Reprocessing

The status of development of reprocessing technology for HTGR fuels is given in Table 9 for the principal operations. A general indication is given of the status of the various operations with reference to the principal program stages presented previously. This work[42–44] has been done primarily at General Atomic Company, ORNL, and by Allied Chemical Corporation at Idaho National Engineering Laboratories. As can be seen in Table 9, most of the small-scale work is complete except in areas of off-gas treatment and liquid waste treatment, where development work is under way. Hot laboratory work is proceeding in areas where it is required; this work is on a very small scale to determine the process effects on the small quantities of irradiated fuel that are available. The principal source of irradiated fuel is the Peach Bottom HTGR and

---

[42] K. J. Notz, *Selected Studies in HTGR Reprocessing Development*, ORNL/TM-5328 (March 1976).

[43] A. P. Roeh and B. R. Wheeler, "Chemical Reprocessing of HTGR Fuels," *Trans. Am. Nucl. Soc.* 22: 336 (November 1975).

[44] C. A. Heath and M. E. Spaeth, *Reprocessing Development for HTGR Fuels*, GA-A13279 (February 1975).

Table 9. Status of Reprocessing Development

Operation	Program Phase[a]					
	Cold Lab	Hot Lab	Cold Engr'g	Hot Engr'g	Cold Prototype	Demonstration
Primary burner feed preparation	C	P	C	P	P	N
Primary burning	C	P	C	P	P	N
Particle classification	C	P	C	P	P	N
Particle crushing	C	P	C	P	P	N
Secondary burning	C	P	C	P	P	N
Dissolution	C	P	C	P	P	N
Solvent extraction	C	-	P	P	N	N
Off-gas treatment	P	P	P	P	N	N

[a]C = complete, P = progressing, N = needed, - = not required.

capsule tests. Cold engineering work has been accomplished on all parts of the flowsheet through dissolution, and work is progressing in the other areas. Currently under design is equipment for hot engineering tests of the principal operations. A future requirement is to commence an effort related to the engineering tests of methods to be used for liquid waste treatment and solid waste treatment. At the General Atomic Company full-scale equipment is now being installed for commencing cold prototype development work on all parts of the flowsheet through dissolution. The last column in Table 9 denotes the need to conduct demonstration tests applicable to commercial-scale operations. A summary of the status of processes and equipment follows.

Primary Burner Feed Preparation. The feed is prepared by crushing in three stages: two jaw crushers and a roll crusher to reduce fuel blocks to pieces less than 4.8 mm (3/16 in.) in size. Since it is undesirable to have crossover of ^{235}U to ^{233}U, and accordingly, the appropriate particles must be kept separate, it is important that coating breakage during crushing and also during primary burning be kept to a minimum. Tests to date indicate that only a few percent of the particle coatings are broken during crushing.

Primary Burning. Primary burning is done in a fluidized bed, and the General Atomic Company has operated successfully a primary burner 0.2 m in diameter. Some of the problems that have been encountered include unbalanced control during start-up, formation of localized hot spots, difficulty with recycle of carbon fines that are generated during combustion, and the formation of clinkers. Modifications have been made in the cold engineering work and indicate that these problems can be controlled by proper gas distribution and dense-phase pneumatic recycle of fines. At present a 0.4-m-diam fluidized bed primary burner is being installed in preparation for the cold prototype work. Although

development work is not being done on other concepts, it is possible to develop several different concepts of alternative burning techniques, including a shaft furnace or a whole-block burner. A shaft furnace would burn crushed products from the first-stage jaw crusher, while the whole-block burner would bypass most crushing steps and allow direct introduction of whole spent fuel elements.

Particle Classification. Primary burning removes fuel element graphite, outer coatings from Triso-coated fissile particles, and the entire carbon coating from the Biso-coated fertile particles. These two types of particles are separated via their density differences. The thoria kernels, which should survive primary burning intact, have a density of about 10 g/m^3, while the fissile particles with their porous inner carbon layer and silicon carbide overcoatings have a density of about 3 g/cm^3. Gas elutriation has been shown to be very effective for separation of these particles. A zigzag column gives very good efficiency and can be operated with crossovers of only 1% of the fertile particles and 5% of the fissile particles.

Particle Crushing. As has been previously noted, ^{235}U-bearing particles may be retired without further processing. However, other fuel particles with silicon carbide coatings must be further processed through a small roll crusher or jet grinder to break the silicon carbide coatings. Both of these work quite satisfactorily and do not present a significant engineering problem.

Secondary Burning. The crushed particles are then burned in a secondary fluidized bed burner to remove the inner carbon coatings. This burner, which is 0.2 m in diameter, has been successfully tested in cold engineering tests and will be included in the prototype tests.

Dissolution. Since thoria resists dissolution in HNO_3 unless catalyzed by fluoride ion, the fertile fuel particles are dissolved in Thorex reagent, which is concentrated nitric acid with small amounts of fluoride and aluminum ion. Fissile particles not containing thorium can be dissolved in nitric acid. In the case of either type of particle, the dissolver solution is centrifuged to remove insoluble solids, such as silicon carbide hulls, and the resultant liquor is then ready for solvent extraction.

Solvent Extraction. For purification and separation of the products in the fertile-derived liquor, which contains ^{233}U, thorium and fission products, a modified acid Thorex process is used. In the modified acid Thorex process, the highly acidic solution from the dissolution step is given an "acid adjustment" whereby most of the excess acid is driven off by heating or steam stripping. The feed is then taken through a series of liquid-liquid extractions in pulsed columns using water-immersible solutions of tributyl phosphate (TBP) in *n*-dodecane (NDD). Although the Thorex process has been modified to accommodate the particular characteristics of the HTGR fuel, it is not expected that the fuel will create any major problems in the solvent extraction flowsheet. However, the equipment for solvent extraction must be designed for remote maintenance, and this will require significant development during the cold prototype development phase.

The Purex process will be used for the fissile-derived liquor, and this process will be the same as that used for the reprocessing of light-water reactor fuels. The principal problem to be assessed is whether the much higher burnup (70 at. % in the fissile particles compared with approximately 3 at. % burnup in LWR fuels) will present a problem in the operation of the process. Hot engineering work is required for this assessment.

Off-Gas Treatment. The program is directed at reducing releases of radioactivity from a commercial recycle plant to extremely low values. Part of our work is aimed at determining what is possible with respect to decontamination factors. The HTGR fuel reprocessing flowsheet presents a unique problem in comparison with other reprocessing flowsheets in that very large volumes of CO_2 must be processed to remove radioactive species, and, in addition, it may be necessary to also consolidate and isolate ^{14}C. While the major source of off-gas is the primary burner, all other operations in the process contribute to the off-gas stream. The off-gas cleanup operation includes condensation of volatiles, removal of ^{129}I and ^{3}H, holdup of ^{220}Rn to permit almost complete decay to solid products, and concentration of ^{85}Kr. It may include fixation of ^{14}C. Iodine will probably be removed by silver zeolite, radon will be held up on a molecular sieve, tritiated water will be taken out with a molecular sieve, and krypton will be removed via the KALC (krypton absorption by liquid carbon dioxide) process.

The KALC process utilizes the solubility of krypton in CO_2. This provides a basis for separating krypton from the light gases (O_2, N_2, and CO), while a subsequent fractionation step separates the krypton from the liquid CO_2 solvent. Cold engineering tests have demonstrated the feasibility of KALC operations. Additional decontamination for tritiated water, iodine, and particulate matter may be possible during the various scrubbing and fractionation steps involved in KALC. However, this remains to be proven in the development program. If necessary, ^{14}C would be removed by fixation in $CaCO_3$.

Refabrication

The status of development for refabrication technology for HTGR fuels is summarized in Table 10. Except for processes and equipment for waste and scrap treatment, most of the work is in the development phases of cold engineering and hot engineering tests.[45] Actually, hot engineering test equipment is in the design phase; cold engineering equipment is available for most of the processes involved. The status of development of various parts of the flowsheet follows.

Uranium Feed Preparation. The process starts with the introduction of purified ^{233}U nitrate solution from the reprocessing flowsheet. Decontamination by removing ^{232}U decay products may be required so that the age of decay products that will be built into the material during

---

[45] J. D. Sease, R. A. Bradley, and E. Zimmer, "Refabrication Technology for HTGR Fuels," *Trans. Am. Nucl. Soc.* 22: 336–37 (November 1975).

Table 10. Status of Refabrication Development

Operation	Program Phase[a]					
	Cold Lab	Hot Lab	Cold Engr'g	Hot Engr'g	Cold Prototype	Demonstration
Uranium feed preparation	-	-	-	P	N	N
Resin loading	C	C	P	P	N	N
Resin particle carbonization	C	-	P	P	N	N
Resin conversion	C	-	P	P	N	N
Particle coating	C	-	C	P	P	N
Fuel rod fabrication	C	-	C	P	P	N
Fuel element assembly and treatment	C	-	P	-	N	N
Sample inspection and quality assurance	C	-	P	P	N	N
Waste and scrap treatment	P	-	P	P	N	N

[a]C = complete, P = progressing, N = needed, - = not required.

refabrication is known precisely. Results of the hot engineering tests, particularly on the nondestructive test methods to be developed for accountability, will indicate whether or not this question is actually required in a demonstration plant. If it is required, the technology for decontamination by ion exchange is well known.

Resin Loading. Although there are many methods for preparation of HTGR fuel kernels, the reference flowsheet for fissile kernels is based on loading uranium onto ion exchange resin spheres. An inherent advantage of the resin process for fabrication is that the resin is supplied in the form of microspheres; therefore, a remote sphere-forming operation is not required. In the process, acid-deficient uranyl nitrate is prepared by removal of nitrate by solvent extraction, and the solution is then pumped to a loading column to contact the resin. The loaded resin is then dried at about 110°C. Engineering-scale resin loading equipment capable of loading 20 kg U/day is in routine operation.

Resin Particle Carbonization. The loaded and dried resin kernels are classified, and nonspherical shapes are removed. The microspheres are then carbonized in the range from 800 to 1200°C. This operation is presently being carried out successfully in cold engineering equipment.

Resin Conversion. For the required performance of the fuel, it is desirable to produce a controlled mixture of uraniun oxide and uranium carbide in the microsphere. This conversion operation is done at 1600 to 1800°C using a controlled atmosphere to produce the desired stoichiometry, which is a mixture of UO_2 and UC_2 (plus some carbon). Another advantage of the resin process is that it leads directly to such a mixture, with the exact stoichiometry adjustable as desired. The conversion operations are actually carried out in the same furnaces used for coating. The operations have been carried out successfully in an engineering-scale 0.13-m-diam coating furnace. For a commercial facility a 0.25-m system is required, and a cold prototype unit for this development is being designed.

Particle Coating. After conversion, the various coating layers are applied. These layers include the buffer and the inner low-temperature isotropic coating layer at 1300°C, silicon carbide coating layer at 1600°C, and an outer low-temperature isotropic coating layer applied at 1300°C. After the coating operations, the material is classified, and coating batches are blended and consolidated.

The coating operation is one of the more complex problems for remote application. Because the equipment produces undesirable effluents that must be handled, precise control over the number of process parameters is required and frequent routine maintenance must be carried out on the coater internals because of the buildup of soot and other deposits. The wastes produced during coating include hydrogen, HCl, and a quantity of carbonaceous solid waste greater in volume than the coating product. Coater effluent is handled by scrubbing systems using perchloroethylene for the carbon coating effluent and sodium hydroxide for the silicon carbide coating effluent, which contains hydrochloric acid. As previously noted, a 0.13-m coating furnace has been operated successfully, producing satisfactory product, and a 0.25-m furnace is under design.

Fuel Rod Fabrication. In fuel rod fabrication and subsequent steps, coated microspheres are being handled, and, therefore, the contamination level should be very low. However, because of the uncertainty of cumulative effects and upset conditions that may occur during a 20-year plant lifetime, we have determined that the equipment should be designed for remote maintenance. In the fuel rod fabrication process, a preformed matrix slug composed of a mixture of graphite flour and petroleum pitch is injected into a die holding a bed of blended fissile and fertile particles. The injection occurs at 180°C, after which the molds are cooled and the solid fuel rod is ejected. A device capable of fabricating 4000 rods per day has been successfully demonstrated, and a fully prototypic machine for remote operation is currently being designed.

Fuel Element Assembly and Treatment. In fuel element assembly molded fuel rods are placed into machined holes in a graphite block. The block containing the rods and also end caps is heated to 1800°C to cure the matrix. After curing, the element is cleaned and packaged for shipment.

For refabrication, the principal problem concerns development of the furnace to heat the large fuel element to 1800°C. Cycle time required to heat and cool the fuel element dictates that some type of continuous furnace be employed. We have selected a vertical furnace configuration for remote application, primarily because of the smaller floor space requirements and the relative ease of vertical assembly and disassembly. A furnace capable of producing 16 fuel elements per day and having dimensions of about 1.8 by 1.8 by 7.6 m high (6 by 6 by 25 ft) has been designed. The furnace is designed as a three-module, vertically stacked unit. The fuel elements are loaded at the top and are continuously passed down through the furnace. Air locks are provided at each end to protect the furnace inert atmosphere during loading and unloading. This furnace, after construction, will be used for cold engineering work. If the cold engineering work is successful, the furnace will then be modified to accomplish the objectives of the cold prototype development, which requires that more of the remote features be included.

Sample Inspection and Quality Assurance. The sample inspection and quality assurance operations in the refabrication flowsheet are very significant in terms of the total number of operations and the interaction of the operations with the various processes. The processing operations and quality control requirements for the fabrication of recycle HTGR fuel are given in Fig. 16. It is anticipated that most of the analyses can be done semiremotely behind shield thicknesses equivalent to 50 to 100 mm (2–4 in.) of lead. Techniques for most of these inspections have been developed, and the application of any one of these analyses to refabrication does not appear formidable. The major problem is the integration of the various analyses into an efficient inspection line. This integration relies heavily upon development of efficient sampling and sample transfer techniques. Devices for sampling and transfer of unencapsuled microspheres are being developed. Also, pneumatic transfer of capsules containing samples has also been developed in cold engineering operations.

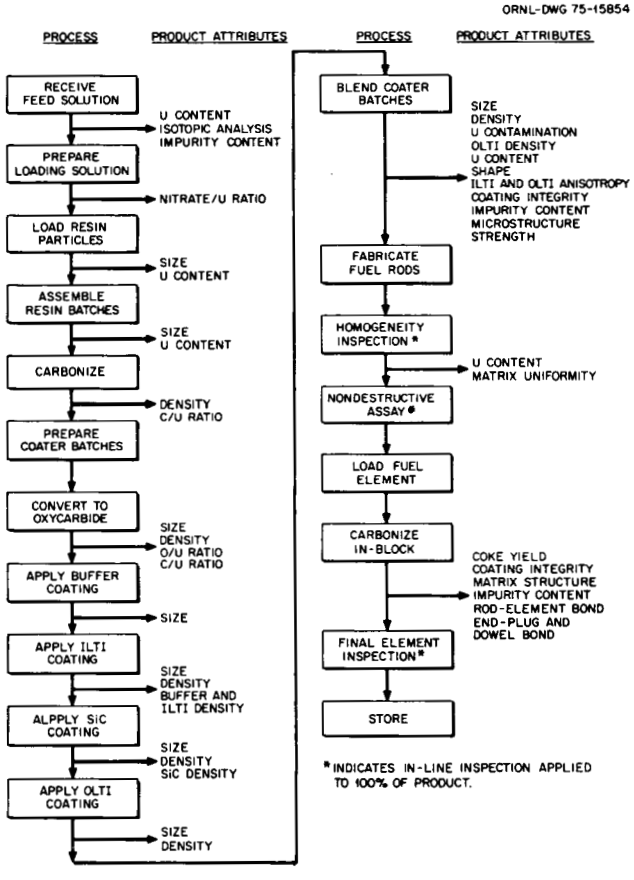

Fig. 16. Processing Operations and Quality Control Requirements for Fabrication of Recycle HTGR Fuel.

Waste and Scrap Treatment. Waste and scrap treatment will have a large impact on design of a commercial recycle facility because of the large volume of such materials. Because of the rejects anticipated, for every kilogram of uranium leaving the plant in a fuel element, approximately 0.4 kg U must be processed as scrap. The reject rates are generously estimated to yield a conservative plant design; hopefully, the rates will be somewhat less in actual operations. In the waste and scrap system, scrubbers, crushers, burners, and leachers will be employed to handle coated particles, green fuel sticks, excess matrix material, carbonaceous furnace parts, and other carbon debris, pyrophoric fuel particles, and contaminated perchloroethylene (C_2Cl_4). Other systems — treating liquid wastes, nonburnable contaminated wastes, and off-gases — are common to other recycle plant systems discussed elsewhere. In the perchloroethylene recovery system, it is anticipated that the C_2Cl_4 that is used in treating off-gases from the carbonization, coating, and element carbonization furnaces will be recovered by distillation and that the still bottoms will be incinerated. For scrap recovery, it is planned that reject fissile material will be crushed, burned, leached with HNO_3 and returned to the reprocessing flowsheet as uranyl nitrate solution. Development work in waste and scrap treatment is currently proceeding in the cold labroatory phase of development, and equipment is being designed for cold engineering and hot engineering test work.

Waste Treatment

Although part of the waste treatment was discussed under the technical areas of reprocessing and refabrication, portions of the required waste consolidation and isolation technology were not covered. Table 11 summarizes the status of development for the consolidation of wastes and for their isolation for permanent storage. As can be seen, for HTGR applications work is progressing only in the areas of laboratory-scale work. The strategy of the HTGR Fuel Recycle Development Program is to accomplish those developments that are necessary because of the particular requirements of the HTGR recycle flowsheet over those required for LWR fuel recycle and waste handling. Therefore, the ERDA Waste Management Program includes developments, not summarized here, that can be utilized to fulfill the requirements of cold engineering, hot engineering, and cold prototype work. Our assessment of the required work in those program phases is not complete.

Pence recently published a survey of HTGR waste treatment requirements,[46] and Lin has summarized HTGR fuel reprocessing wastes and the required treatments.[47] The requirements are presented graphically in

---

[46] D. T. Pence, *HTGR Reprocessing Wastes and Development Needs*, GA-A13919 (April 1976).

[47] K. H. Lin, *Characteristics of Radioactive Waste Streams Generated in HTGR Fuel Reprocessing*, ORNL/TM-5096 (January 1976).

Table 11. Status of Development for Waste Consolidation and Isolation

Operation	Program Phase[a]					
	Cold Lab	Hot Lab	Cold Engr'g	Hot Engr'g	Cold Prototype	Demonstration
High-Level Wastes						
Liquid solidification	P	P	N	N	N	N
Off-gas consolidation	P	P	N	N	N	N
Intermediate-Level Wastes						
Spent equipment	P	P	-	-	N	N
Solvents and aqueous	P	P	N	N	N	N
Solids packaging	P	P	-	-	N	N
Low-Level Wastes						
Incineration and recovery	P	P	N	N	N	N
Packaging	N	N	-	-	N	N

[a]P = progressing, N = needed, - = not required.

in Fig. 17. Also, Judd[48] has summarized the wastes from the refabrication flowsheet, and his summary is presented in Fig. 18 and Table 12.

As previously noted, some HTGR recycle wastes are not significantly different from LWR fuel recycle wastes, and thus can be processed and isolated similarly. HTGR recycle wastes that are unique and not encountered with LWR wastes include silicon carbide hulls, retired ^{235}U fissile particles, fluoride in the solvent extraction waste, and ^{14}C that is greatly diluted by large quantities of CO_2.

CONCLUSIONS

Several fuels and fuel element designs have been proven for use in HTGRs that provide outlet temperatures of approximately 740°C (of interest for the steam cycle). In the United States, from the standpoints of performance and fuel cycle economics, the resin-derived fissile UO_2-UC_2 kernel and the sol-gel derived fertile kernels (ThO_2) have been selected as optimum for the steam cycle HTGR. With modifications of fuel element design, they offer excellent prospects for providing higher temperatures of interest in advanced HTGR systems.

[48]M. S. Judd, R. A. Bradley, and A. R. Olsen, *Characteristics of Effluents from a High-Temperature Gas-Cooled Reactor Fuel Refabrication Plant*, ORNL-TM-5059 (December 1975).

ORNL DWG 76-462

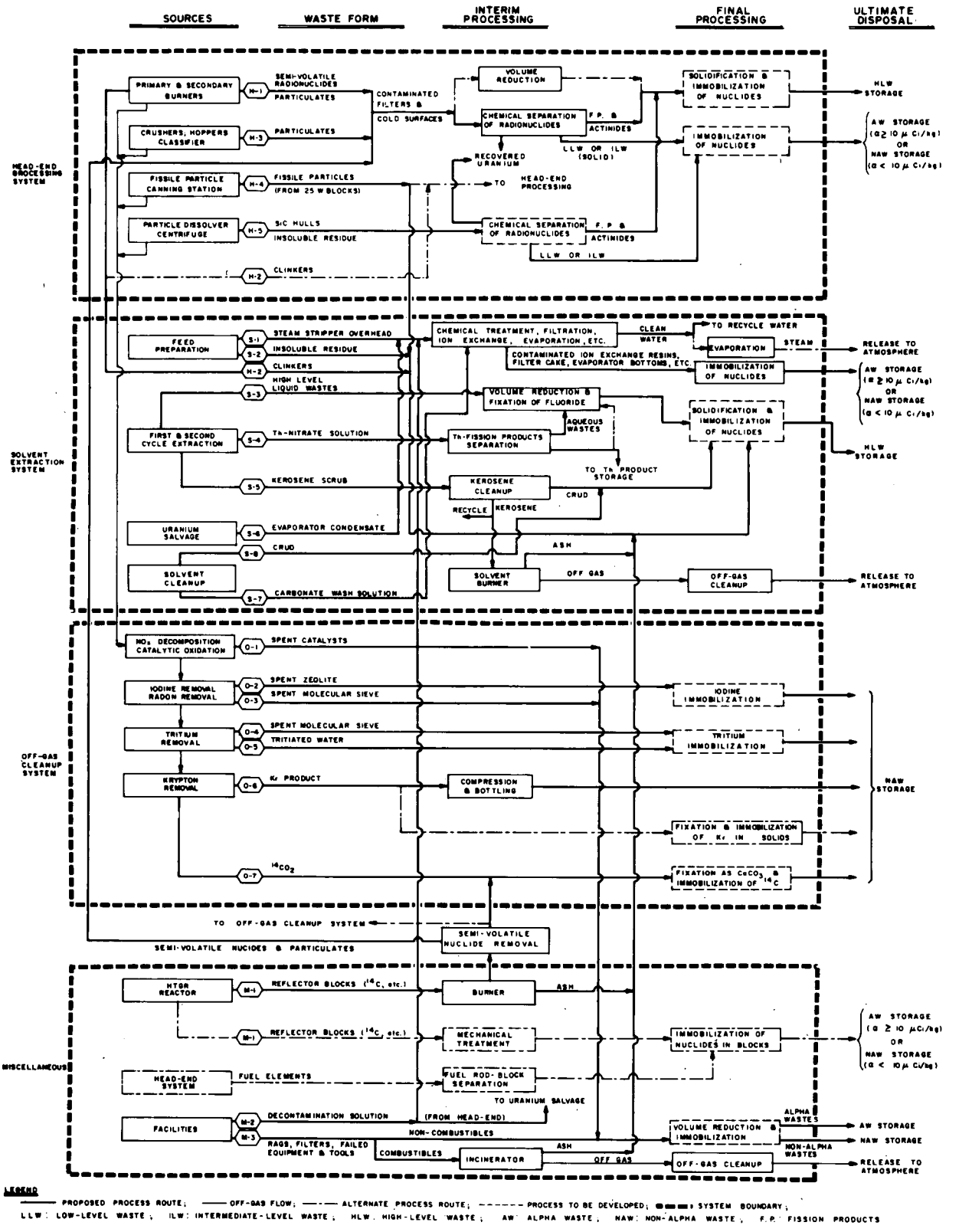

Fig. 17. Overall Schematic Flow Diagram for HTGR Fuel Reprocessing Wastes (Semivolatiles, Liquids, and Solids).

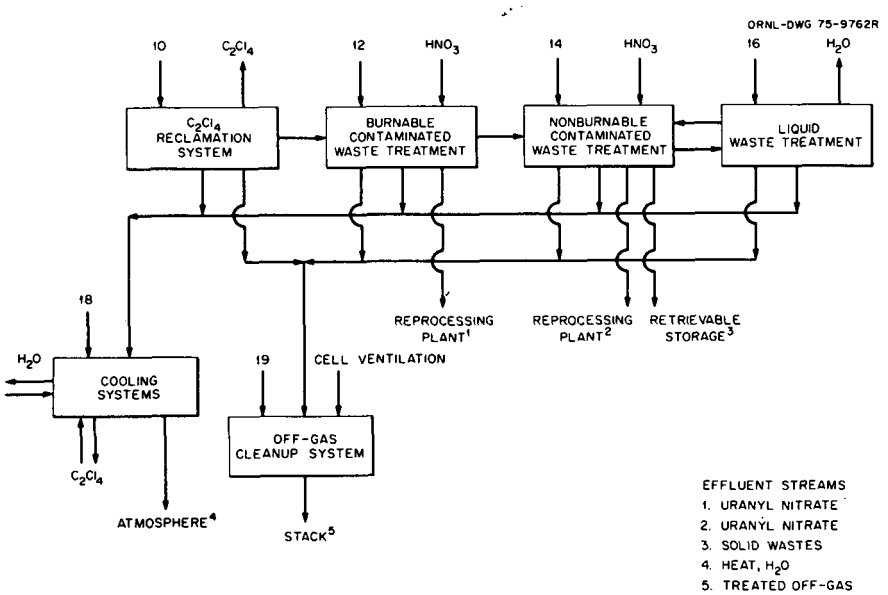

Fig. 18. Refabrication Plant Central Effluent Treatment System.

Table 12. Effluents from Scrap Recovery per Kilogram of Uranium Product

Stream	Description	Sources from ^{233}U Recycle	Sources from ^{235}U Recycle	Effluent Treatment System
1	Waste heat, Btu	1.004×10^5	1.004×10^5	Cooling systems
	J	1.058×10^8	1.058×10^8	
2	CO_2, scf (std liters)	43.03 (1226)	43.03 (1226)	Off-gas cleanup system
	Particulates, kg			
	U	1.64×10^{-7}	1.64×10^{-7}	
	Solids	4.7×10^{-7}	4.7×10^{-7}	
3	Particulates, kg			Off-gas cleanup system
	U	1.64×10^{-7}	1.64×10^{-7}	
	Solids	4.7×10^{-7}	4.7×10^{-7}	
4	^{220}Rn, Ci[a]	12.0	0	Off-gas cleanup system
	CO_2, scf (std liters)	74 (2100)	74 (2100)	
	H_2O, scf (std liters)	2.4 (68)	2.4 (68)	
	Particulates, kg			
	U	3.8×10^{-7}	3.8×10^{-7}	
	Solids	7.0×10^{-8}	7.0×10^{-8}	
5	^{220}Rn, Ci[a]	12.0	0	Off-gas cleanup system
	NO_x, scf (std liters)	0.026 (0.73)	0.026 (0.73)	
6	SiC, kg	0.23	0.23	Nonburnable contaminated waste treatment
	Entrapped U, kg	3.8×10^{-5}	3.8×10^{-5}	
	H_2O, kg	0.023	0.023	
7	Waste heat, Btu	1.42×10^4	3.2×10^3	Cooling systems
	J	1.50×10^7	3.4×10^6	
8	C_xH_y, scf (std liters)	0.24 (6.7)	0.054 (1.54)	Off-gas cleanup system
	C_2Cl_4, scf (std liters)	0.0045 (0.13)	0.0010 (0.028)	
9	C_xH_y, scf (std liters)	0.081 (2.3)	0.0186 (0.53)	C_2Cl_4 Reclamation system
Reprocessing plant	U, kg	0.38	0.38	Solvent extraction
Reprocessing plant	U, kg	0.031	0.031	Head-end
	Th, kg	0.37	0.066	

[a]Average release.

HTGRs can effectively utilize the low-enrichment fuel cycle, the Th-^{233}U fuel cycle, or plutonium in either cycle. The Th-^{233}U cycle is the most attractive economically unless fast breeders cannot utilize all plutonium produced by LWRs. A comprehensive Th-^{233}U fuel cycle development program is under way, and most of the process equipment development is proceeding successfully through the stages of cold engineering and prototypical equipment development; design of equipment for hot engineering tests is commencing.

ACKNOWLEDGMENTS

The authors wish to acknowledge that the work summarized in this report represents the contributions of many persons on the following programs: HTGR Base Technology Program at ORNL; HTGR Fuels and Core Development Program at GA; Thorium Utilization Programs at GA, ICPP, and ORNL; and the overseas programs, especially at KFA Jülich, FRG. Many of the contributions are discussed in detail in the various references. The authors also expresss appreciation for the assistance of P. R. Kasten and K. J. Notz in review of the draft report, to S. Peterson for editing, and to Julia Bishop for final typing and makeup.

ORNL/TM-5501
UC-77 (Gas-Cooled
Reactor Technology)

INTERNAL DISTRIBUTION

1–2. Central Research Library
3. Document Reference Section
4–13. Laboratory Records Departmer
14. Laboratory Records, ORNL RC
15. ORNL Patent Office
16. R. J. Beaver
17. A. L. Boch
18. R. A. Bradley
19. A. J. Caputo
20. J. A. Carpenter
21. W. L. Carter
22. J. A. Conlin
23–27. J. H. Coobs
28. F. L. Culler
29. J. E. Cunningham
30. F. C. Davis
31. R. G. Donnelly
32. J. P. Drago
33. W. P. Eatherly
34. D. E. Ferguson
35. R. W. Glass
36. P. A. Haas
37. F. E. Harrington
38. C. C. Haws
39. R. F. Hibbs
40–42. M. R. Hill
43. R. M. Hill, Jr.
44. F. J. Homan
45. J. D. Jenkins
46. D. R. Johnson
47–48. P. R. Kasten
49. H. T. Kerr
50. R. K. Kibbe
51. W. J. Lackey
52. K. H. Lin
53. E. L. Long, Jr.
54–58. A. L. Lotts
59. A. P. Malinauskas
60. F. H. Neill
61. K. J. Notz
62. A. R. Olsen
63. W. H. Pechin
64. H. Postma
65. R. H. Rainey
66. D. P. Reid
67. A. D. Ryon
68. T. F. Scanlan
69. C. D. Scott
70. J. D. Sease
71. J. W. Snider
72. D. B. Trauger
73. J. E. Van Cleve
74. V.C.A. Vaughen
75. G. W. Weber
76. J. R. Weir
77. R. G. Wymer
78. P. M. Brister (consultant)
79. John Moteff (consultant)
80. Hayne Palmour III (consultant)
81. J. W. Prados (consultant)
82. N. E. Promisel (consultant)
83. D. F. Stein (consultant)

EXTERNAL DISTRIBUTION

84–85. ERDA DIVISION OF NUCLEAR FUEL CYCLE AND PRODUCTION, Washington, DC 20545

Director

86–87. ERDA DIVISION OF NUCLEAR RESEARCH AND APPLICATION, Washington, DC 20545

Director

EXTERNAL DISTRIBUTION (Continued)

88–89. ERDA OAK RIDGE OPERATIONS OFFICE, P.O. Box E, Oak Ridge, TN 37830

Director, Reactor Division
Director, Research and Technical Support Division

90–256. ERDA TECHNICAL INFORMATION CENTER, Office of Information Services, P.O. Box 62, Oak Ridge, TN 37830

For distribution as shown in TID-4500 Distribution Category, UC-77 (Gas-Cooled Reactor Technology)

257–294. ERDA Exchange Agreements with Germany and Dragon Project

☆U.S. GOVERNMENT PRINTING OFFICE: 1976-641-252/440