OAK RIDGE NATIONAL LABORATORY LIBRARIES

3 4456 0551094 3

ORNL /TM-5823

cy. 87

Process Alternatives for HTGR Fuel Reprocessing Wastes: An Engineering Evaluation

K. H. Lin

[redacted]

OAK RIDGE NATIONAL LABORATORY
CENTRAL RESEARCH LIBRARY
DOCUMENT COLLECTION
LIBRARY LOAN COPY
DO NOT TRANSFER TO ANOTHER PERSON
If you wish someone else to see this document, send in name with document and the library will arrange a loan.
UCN-7969
13 3-67

OAK RIDGE NATIONAL LABORATORY
OPERATED BY UNION CARBIDE CORPORATION FOR THE ENERGY RESEARCH AND DEVELOPMENT ADMINISTRATION

Printed in the United States of America. Available from
National Technical Information Service
U.S. Department of Commerce
5285 Port Royal Road, Springfield, Virginia 22161
Price: Printed Copy $5.50; Microfiche $3.00

This report was prepared as an account of work sponsored by the United States Government. Neither the United States nor the Energy Research and Development Administration/United States Nuclear Regulatory Commission, nor any of their employees, nor any of their contractors, subcontractors, or their employees, makes any warranty, express or implied, or assumes any legal liability or responsibility for the accuracy, completeness or usefulness of any information, apparatus, product or process disclosed, or represents that its use would not infringe privately owned rights.

ORNL/TM-5823
Dist. Category UC-77

Contract No. W-7405-eng-26

CHEMICAL TECHNOLOGY DIVISION

Thorium Utilization Program (189a #OH045)
Milestone No. 1 (Task 400)
Commitment No. 2625

PROCESS ALTERNATIVES FOR HTGR FUEL REPROCESSING WASTES: AN ENGINEERING EVALUATION

K. H. Lin

Date Published: May 1977

OAK RIDGE NATIONAL LABORATORY
Oak Ridge, Tennessee 37830
operated by
UNION CARBIDE CORPORATION
for the
ENERGY RESEARCH AND DEVELOPMENT ADMINISTRATION

OAK RIDGE NATIONAL LABORATORY LIBRARIES

3 4456 0551094 3

CONTENTS

Page

ABSTRACT. 1

1. INTRODUCTION. 1

2. WASTE CLASSIFICATION AND EVALUATION CRITERIA. 2

2.1 Classification of HTGR Wastes. 2

2.2 General Criteria for Evaluation of Processing Alternatives. 3

3. WASTE PROCESSING ALTERNATIVES 5

3.1 High-Level Solid Wastes. 5

3.1.1 Sintered-metal filters and cold traps 8

3.1.1.1 General characteristics. 8

3.1.1.2 Radiochemical characteristics and radionuclide behavior. 9

3.1.1.3 Process alternatives 10

3.1.1.4 Assessment of process alternatives . . . 14

3.1.1.5 Research and development needs 16

3.1.2 SiC hulls and insolubles. 18

3.1.2.1 General characteristics. 18

3.1.2.2 Radiochemical characteristics and radionuclide behavior. 19

3.1.2.3 Process alternatives 23

3.1.2.4 Assessment of process alternatives . . . 26

3.1.2.5 Research and development needs 29

3.1.3 Retired fissile particles and clinkers. 31

3.1.3.1 General characteristics. 31

3.1.3.2 Radiochemical characteristics. 31

3.1.3.3 Process alternatives 34

3.1.3.4 Assessment of process alternatives . . . 35

3.1.3.5 Research and development needs 35

3.2 Non-High-Level Solid Wastes Including Transuranic Wastes 38

3.2.1 Spent reflector blocks. 38

3.2.1.1 General characteristics. 38

3.2.1.2 Radiochemical characteristics and radionuclide behavior. 39

Page

3.2.1.3 Process alternatives. 39
3.2.1.4 Assessment of process alternatives. . . . 40
3.2.1.5 Research and development needs. 43
3.2.2 Spent catalysts and molecular sieves 43
3.2.2.1 General characteristics 43
3.2.2.2 Radiochemical and chemical contaminants . 45
3.2.2.3 Process alternatives. 46
3.2.2.4 Assessment of process alternatives. . . . 48
3.2.2.5 Research and development needs. 49
3.2.3 Spent ion exchange resins, filter cakes, evaporator bottoms 49
3.2.3.1 General and radiochemical characteristics 49
3.2.3.2 Process alternatives and evaluations. . . 52
3.2.3.3 Research and development needs. 53
3.2.4 Miscellaneous solid wastes 54
3.2.4.1 General and radiochemical characteristics 54
3.2.4.2 Process alternatives, their features and R&D needs 55
3.3 High-Level Liquid Wastes. 56
3.3.1 High-level liquid waste (HLLW) 58
3.3.1.1 General characteristics 58
3.3.1.2 Potential problems associated with fluoride. 58
3.3.1.3 Radiochemical characteristics 61
3.3.1.4 Process alternatives and characteristics of solidified HLW 63
3.3.1.5 Research and development needs. 66
3.3.1.6 Partitioning of HLLW. 66
3.3.2 Thorium nitrate solution 69
3.3.2.1 General and radiochemical characteristics 69
3.3.2.2 Process alternatives. 71
3.4 Non-High-Level Liquid Wastes. 71
3.4.1 General characteristics. 71
3.4.2 Process alternatives 71

Page

3.5 Gaseous Wastes. 74

3.5.1 Krypton gas. 74

3.5.1.1 General and radiochemical characteristics 74

3.5.1.2 Assessment of process alternatives and R&D needs 74

3.5.2 Carbon-14 in CO_2 gas 75

3.5.2.1 General and radiochemical characteristics 75

3.5.2.2 Assessment of process alternatives and R&D needs 76

4. SUMMARY AND CONCLUSIONS. 77

5. ACKNOWLEDGMENTS. 79

6. REFERENCES 81

PROCESS ALTERNATIVES FOR HTGR FUEL REPROCESSING WASTES: AN ENGINEERING EVALUATION

K. H. Lin

ABSTRACT

An evaluation has been made of numerous process alternatives for different types of radioactive wastes resulting from reprocessing of HTGR fuels. Discussion of pertinent waste characteristics is followed by a description and an assessment of selected process alternatives. The final phase of the discussion is concerned with identification of research and development needs for specific alternatives. High-level solid wastes from the head-end system, which are unique to HTGR fuel reprocessing, require major process development efforts. Most other types of wastes can reasonably be expected to make use of technologies being developed for LWR wastes, and will require minor to moderate modifications.

1. INTRODUCTION

The types and characteristics of radioactive wastes expected from High-Temperature Gas-Cooled Reactor (HTGR) fuel reprocessing operations have been identified previously.[1,2] In order to achieve successful closure of the HTGR fuel cycle, development of technologies for management of those wastes* is just as important as the recovery and the recycle of fuel values from the spent fuel elements. Some of the primary wastes (e.g., off-gas from the head-end system, and combustible wastes) must be treated to reduce the radionuclide contents to below the levels required by applicable regulations and standards. These secondary wastes and other types of primary wastes must then be converted to forms acceptable for handling, transportation, and ultimate isolation from the biosphere. Many

*The term "waste management," as used in this report, refers to the entire spectrum of waste operations including all the steps involved in treatment of waste effluents, processing of the resulting wastes, conversion into acceptable forms for long-term storage, transportation to storage sites, and control and management of waste isolation sites.

of the alternatives being developed for management of reprocessing wastes from the Light Water Reactor (LWR) are adaptable to the HTGR case. This is especially true of the wastes from the solvent extraction system. However, wastes from the HTGR head-end system are unique, and special methods must be developed for their processing.

Selection of technical alternatives for treatment and/or conversion of individual wastes is governed by many factors, including: (1) waste type, (2) technical and economic feasibility of the process, (3) Federal and local regulations and standards pertaining to the effluents discharged to the environment, and (4) Federal regulations that specify the final waste form for shipment to the isolation repository. Factors (3) and (4) for wastes from the back end of the nuclear fuel cycle have not yet been fully defined.

The major objectives of the present study are: (1) to carry out a critical review and an evaluation of available information related to treatment and processing of waste streams from HTGR fuel reprocessing, (2) to identify the existing data and development work that are applicable to the HTGR wastes with little or no modification, and (3) to define the development needs for wastes that are unique to the HTGR.

2. WASTE CLASSIFICATION AND EVALUATION CRITERIA

2.1. Classification of HTGR Wastes

There has been confusion concerning usage of the radioactive waste categories between different organizations that deal with the subjects of waste management. Traditionally, the radwaste categories at individual nuclear facilities are based on the local convention that has been in use for many years. As a result, different organizations rarely employ the same definitions in reference to the ranges of radionuclide concentrations or dose rates of the low-, intermediate-, and high-level wastes. In the United States, the definition of the high-level liquid waste (HLLW) given by 10 CFR 50[3] is the only official waste category that has been accepted by most of the workers in the area of fuel reprocessing.

In 1967, two separate groups, one in the United States and the other in Europe, proposed independent definitions for various radioactive waste categories.[4,5] Although somewhat different bases were used by the two groups in classifying the radioactive wastes, liquid and gaseous wastes were defined in terms of the specific radioactivity ranges by both groups. However, the International Atomic Energy Agency (IAEA) used the dose rate (R/hr) instead of specific radioactivity to classify solid wastes. The definitions used in ref. 4 have also been used in this report to categorize the HTGR reprocessing wastes (as discharged) shown in Table 1. The major purpose of such a classification is to facilitate any subsequent discussion of waste processing alternatives. It is not intended for use as the official categorization of radwastes in general.

2.2. General Criteria for Evaluation of Processing Alternatives

Published technical data and existing technologies, including those being developed for the LWR fuel cycle, were critically reviewed to identify information that may be utilized in the development of processing alternatives for HTGR wastes. The criteria listed below were used as the basis of the evaluation and selection of potential alternatives. They also served as the guideline in defining the research and development needs for these alternatives.

1. The process must be able to convert the waste into a form which can ensure long-term safety in the isolation repository.
2. Simplicity in process and equipment is highly desirable.
3. The process should be relatively insensitive to the waste composition.
4. The process should generate few or no secondary waste streams.
5. The number of interim waste treatment steps should be minimized, and different waste streams should be combined whenever possible.
6. The process should utilize equipment that is easy to maintain.

Table 1. Classification[a] of HTGR reprocessing wastes

Waste category	Radioactivity level[b]	HTGR Waste streams (source)[c]
	Liquid radwastes	
	μCi/ml	
Low level	$10^{-7} < A \leq 0.1$	Evaporator condensate (S)
Intermediate level	$0.1 < A \leq 10^3$	Steam stripper overhead (S); kerosene scrub (S); decontamination solution (M); carbonate wash solution (S); tritiated water (O)
High level	$A > 10^3$	High-level liquid wastes (S); thorium nitrate solution (S)
	Solid radwastes	
	μCi/kg	
Low level	$0.02 < A' \leq 7 \times 10^3$	Spent molecular sieves (O); misc. solids waste (M)
Intermediate level	$7 \times 10^3 < A' \leq 7 \times 10^7$	Reflector blocks (M); rags, HEPA filters, failed tools and equipment (M); spent catalysts and zeolites (O)
High level	$A' > 7 \times 10^7$	SiC hulls and insols. (H); 25W fissile particles (H); sintered metal filters and cold traps with semivolatiles, etc. (H); clinkers (H); insoluble residues (S)
Transuranic	$A' \geq 10$ (alpha activity)	HEPA filters, failed tools and equipment (M); misc. solid wastes (M); crud and ash (S-W); spent ion exchange resin, filter cake and evaporator bottom (W)

[a]Based on ref. 4.

[b]A refers to radioactivity (μCi/ml) of liquid wastes; A′ refers to radioactivity (μCi/kg) of solid wastes.

[c]The letters in parentheses refer to the system in which the waste originates, i.e., S = solvent extraction system; O = off-gas cleanup system; M = miscellaneous; H = head-end system; W = from waste interim processing, secondary waste.

3. WASTE PROCESSING ALTERNATIVES

The overall flow diagram depicted in Fig. 1 illustrates the sources and types of waste streams as well as potential waste processing schemes. In the discussion that follows, these waste streams are classified into different categories (as described in Table 1) to facilitate the presentation of various process alternatives. The final processing schemes for each waste stream shown in Fig. 1 refer to those which are capable of converting the waste into forms that are acceptable for release to the environment or for transport to the ultimate isolation facility. Any pretreatment or processing required before final processing is considered to be the interim processing for convenience.

The discussion begins with a brief review of important characteristics of individual waste streams. Potential alternatives for processing of the waste are then discussed. The final phase of the discussion outlines the advantages and shortcomings of the different process alternatives and identifies the research and development (R&D) needs for these alternatives. The listing of R&D needs, however, does not imply that all the items should be studied. Certain items or alternatives may be placed in the low-priority category or may be rejected, such as those based on the available information or on the prospect of acceptance by regulatory authorities. Nevertheless, the items associated with waste characterization must be investigated first, since they would provide guidelines in the selection of a suitable process alternative and in defining the specific scope of the R&D work. The estimates pertaining to the generation rates and characteristics of individual waste streams are based on the fuel element data summarized in Table 2.

3.1 High-Level Solid Wastes

Included in this category are all of the solid-waste streams from the head-end system, consisting of:

1. <u>sintered-metal filters and cold traps</u> contaminated with semivolatile and particulate radionuclides;
2. <u>retired 25W fissile particles</u>;
3. <u>SiC hulls and insolubles</u> separated from leach liquor; and
4. <u>clinkers</u> that may be formed in the burning step.

ORNL DWG 76-462R1

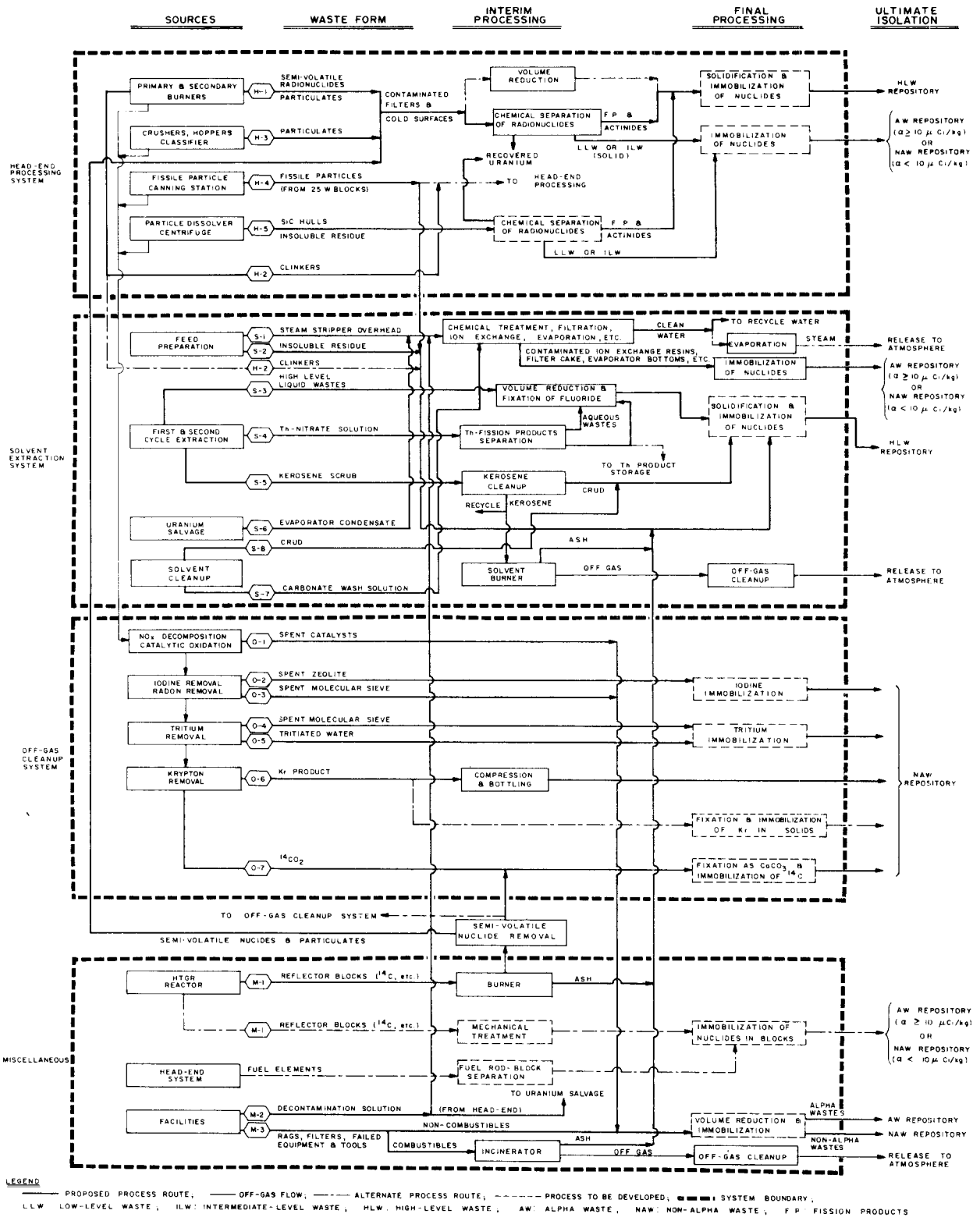

Fig. 1. Overall schematic flow diagram for processing and isolation of HTGR fuel reprocessing wastes.

Table 2. Estimated processing rate and characteristics of individual types of fuel elements (F.E.)[a]

Fuel type[b]	Processing rate (No. F.E./year)	Heavy metal[c]	Average contents of heavy metals (kg/F.E.)			
			Charged fuel		Spent fuel	
			Fissile particle	Fertile particle	Fissile particle	Fertile particle
IM-25R	11,600	U	0.706	0	0.216	0.222
		Th	0	8.550	0	7.926
23R	7,800	U	0.742	0	0.226	0.222
		Th	0	8.830	0	7.926
25R-25W	600	U	3.250	0	2.24	0.19
		Th	0	7.000	0	5.60

[a]Based on an HTGR fuel reprocessing plant with a capacity of 20,000 F.E./year.

[b]All fuel types contain BISO-coated (inner porous carbon and outer dense carbon) fertile particles and TRISO-coated (porous carbon, dense carbon, SiC, and dense carbon) fissile particles. Fertile particles contain thorium, and fissile particles contain uranium of varying isotopic compositions depending upon the fuel type as follows:

IM: contains virgin uranium of ~ 93% ^{235}U, initially charged to HTGR
25R: contains recycle uranium of ~ 30% ^{235}U (refabricated from burned IM)
23R: contains recycle ^{233}U
25W: contains uranium of ~ 4 to 5% ^{235}U (burned 25R).

[c]Uranium is present as UC_2, and thorium as ThO_2.

In addition, insoluble residues from the feed preparation step in the solvent extraction system should also be considered as high-level solid wastes.

3.1.1 Sintered-metal filters and cold traps

3.1.1.1 General characteristics

These devices are provided in the immediate vicinity of the burners in the head-end system for the purpose of removing the bulk of semivolatile (e.g., ruthenium, antimony, and cesium) and particulate radionuclides (e.g., fission and activation products and actinides). The filters for the primary burner are located outside the burner following the cyclone, and those for the secondary burner are installed inside the burner. The sintered-metal filter is a cylindrical cartridge type. The relative dimension of the filter to be used in a commercial reprocessing plant will presumably be similar to that for a pilot-plant-scale 4-in. burner (i.e., 2-3/4 in. OD x 36 in. long x 1/8-in. wall thickness). The design for the cold trap has not yet been finalized, but one of the designs being tested is a concentric, double-tube coil in which the hot off-gas and the coolant gas flow in the countercurrent mode.

No final decision has been made concerning the constructional materials that will be used for the filter and the cold trap in the commercial plant. Hastelloy X and stainless steel 304L are among the possible candidate materials for the filter and the cold trap, respectively. Stainless steel 316L and nickel filters have been employed in the laboratory-scale development work.

For the spent HTGR fuel of known type and irradiation history, the kinds and amounts of nuclides retained by the filters and cold traps during a given period will be governed by the processing condition in the burners, for example, the burner temperature, temperatures of the filters and traps, and the off-gas flow rate. The total amounts of nuclides accumulated on individual filters and cold traps depend upon the service lives of these devices, which, in turn, are influenced by the rate of buildup of radionuclides and by the extent of corrosion attack. The buildup of radio-

nuclides could affect the performances of the filter and the cold trap in different ways. An excessive accumulation of radionuclides can physically block the filter pores. The intensive decay heat resulting from such an accumulation would tend to accelerate corrosion attack and change the metallurgical properties of the filter material. Similarly, increased corrosion attack, as well as changes in heat transfer and metallurgical characteristics of the cold trap, may result from an accumulation of radionuclides on cooling surfaces.

Comprehensive experimental data indicating how the different variables described above can affect the performances of the filter and the cold trap are not yet available. Consequently, there is no reliable method at present for estimating the service lives of these devices (or the rates of generation of these types of waste streams).

3.1.1.2 Radiochemical characteristics and radionuclide behavior

The sources of radioactivity in the spent filters and cold traps are semivolatile and particulate radionuclides accumulated on these devices. Fission products account for the bulk of radioactivity, and a much smaller portion of radioactivity is attributable to actinides and activation products. The nuclide behavior in the off-gas stream from the head-end system has not yet been fully characterized. Nevertheless, the general trend listed below has been observed recently in bench-scale, hot-cell experiments using irradiated fuels.[6] Interpretation of such a trend must, however, be considered preliminary until it is confirmed by further development work.

1. The major portion (> 95%) of semivolatile and particulate nuclides released in the burning steps (primary and secondary) is retained by the sintered-metal filter.

2. The quantity of released nuclides varies not only with individual nuclides but also with the fuel type. In general, the rates and quantities of fission products released from the carbide types of fuel (i.e., UC_2-ThC_2) are considerably higher than those from the oxide type of fuel (i.e., UO_2-ThO_2). The reverse is true in the case of uranium released during burning.

3. The quantities of major nuclides released in the burning steps (primary and secondary combined) in terms of weight percent nuclides in the original fuel are of the following orders of magnitude:

Major nuclides	Quantity released to off-gas (wt % of nuclides in original fuel)	
	(TRISO-UO_2 + BISO-ThO_2) fuel	(TRISO-UC_2 + BISO-ThC_2) fuel
^{90}Sr, ^{125}Sb, ^{144}Ce, ^{154}Eu	$\leq$ 0.5	$\leq$ 5
^{106}Ru, ^{134}Cs, ^{137}Cs	$\leq$ 15	$\leq$ 50
^{129}I	$\leq$ 10	
Total uranium	~ 1	~ 0

4. The total radioactivity accumulated on the sintered-metal filter would be high enough (> 70 Ci/kg) to be classified as a high-level solid waste (Table 1). The alpha radioactivity from actinides is estimated to be several orders of magnitude greater than 10 μCi/kg, the lower limit for transuranic waste (Table 1).

3.1.1.3 Process alternatives

Potential alternatives for the processing of spent filter cartridges and cold traps include methods of widely different complexities. The simplest approach would be to reduce the volume of these wastes by mechanical means such as compaction. Volume reduction can also be accomplished by melting at high temperatures. Leaching of the wastes by acids or other types of solvent is an alternative that may remove substantial amounts of radionuclides from the waste materials. A high degree of separation might be achieved by complete dissolution of the filters and cold traps, followed by separation of radionuclides from the constructional materials via chemical means. Discussion of these alternatives follows.

Compaction. This method involves volume reduction by mechanical compression of the wastes inside a container such as a 55-gal drum, or a specially designed container. The technique has been used frequently at different nuclear facilities in handling much of the low-level solid waste. The extent of volume reduction obtainable would depend mainly upon

the type of waste material (especially its bulk density) and the applied compressive force. There is however, a threshold of compaction pressure range (characteristic of the waste type) beyond which the rate of volume reduction relative to the pressure change becomes very small. According to a recent study[7] on compaction of low-level solid wastes, the compaction pressure range to achieve the maximum volume reduction for average wastes was 30 to 60 kg/cm^2. The volume of average low-level wastes is reduced by a factor of 2 to 5 at the lower pressure range, while a volume reduction of up to ~ 15-fold can be obtained in the upper pressure range.

The characteristics of the spent filters and cold traps, including their mechanical behavior and the radioactivity levels, would be considerably different from those of the types of wastes described above. For example, due to the inelastic nature of constructional materials for filters and traps, there will be little or no tendency of "springback" when the pressure is released. These wastes are associated with high-level radioactivity, and a compacting operation may force out appreciable amounts of radionuclides in the expelled air which would carry significant airborne contamination. Therefore, the compactor must be placed in a contained enclosure with radiation shielding and the off-gas cleanup facility, and it must be capable of sustained remote operation. The unique characteristics of the wastes under consideration imply that development work (nonradioactive) is required (1) to establish a suitable compaction pressure range for obtaining a maximum volume reduction (estimated to be about five- to six-fold); (2) to study their mechanical behavior; and (3) to develop a package (double-contained) that would contain the compacted wastes, including the means for dissipating the decay heat and methods for immobilization of radionuclides. The data available from compaction studies for non-high-level solid wastes[7-9] and for waste cladding hulls[7] would serve as references for the development work dealing with waste compaction. The types of containers for the cladding hulls[10] may be adaptable to the present case.

Melt-casting. The volume reduction resulting from this approach consists of melting pieces of filters and traps which are cut to a specified

size range and casting the melt into ingots. Similar processes are being investigated for possible application to the processing of non-high-level metallic waste materials (including waste LWR fuel cladding hulls) by several ERDA laboratories.[11-13]

Several different types of furnaces, as well as technologies, are available for melting of nonradioactive metal scraps. However, the data for melting of metallic wastes contaminated with radionuclides are quite limited; at present, the behavior of radionuclides during melting and casting is not well understood. The problems associated with melting and casting of the type of wastes under consideration (i.e., spent sintered-metal filters and cold traps) are expected to be even more serious than the waste LWR fuel cladding hulls. This assumption is based on some preliminary data obtained for the filters, indicating that they are characterized by high-level radioactivity coming from semivolatile and particulate nuclides released during burning of HTGR fuels at (~850° to 900°C). Thus, one of the potential problems is revolatilization of semivolatile radionuclides (e.g., cesium, iodine, ruthenium) in the melting and casting steps, since the melting points of Hastelloy X and stainless steel 304 are considerably higher than the temperatures of burning fuels (i.e., ~1300° and ~1450°C for Hastelloy X and stainless steel, respectively). Consequently, provision must be made to recapture these nuclides.

Considerably more development work will be needed to confirm the feasibility of adapting the existing technology to melting and casting of the waste sintered-metal filters and cold traps. Among the equipment to be developed is a remotely operated melting system, including the furnace, the feeder, the off-gas cleanup system, and other accessories. Reliability of the system must be demonstrated through prolonged remote operation using radioactive wastes. Much could be learned from the existing development program in the area of melting and casting of the LWR fuel cladding.

Leaching. The major goal of this alternative is to preferentially remove radionuclides from the spent filters and traps by means of acid or

other types of solvent, with little or no attack on the constructional materials for these devices. The filters and traps thus decontaminated could presumably be handled like the low-level solid wastes, while the leachate solution would be concentrated and combined with the HLLW.

The preliminary data from hot-cell experiments using sintered-metal filters (stainless steel and nickel) contaminated with radionuclides from irradiated fuels have indicated that leaching with dilute (1 to 6 M) HNO_3 appears promising.[6] Leaching of the filter at ambient temperature for ~30 min removed appreciable fractions (up to ~70%) of nuclides including uranium and major fission products. Likewise, according to data from related processes (e.g., decontamination of LWR fuel cladding wastes,[14] recovery of transuranics from non-high-level wastes,[15] and acid digestion of alpha wastes [16]), and from corrosion data,[17-19] solubilities of the filter and trap materials (e.g., Hastelloy X and stainless steel 304L, respectively) in dilute HNO_3 and/or H_2SO_4 should be so low at ambient temperature that preferential leaching of the radionuclides seems feasible. From the known characteristics of nuclides (oxide forms) of interest, uranium and alkali and alkaline earth elements would be readily dissolved in these acids but plutonium and thorium would require the addition of a small amount of fluoride to promote dissolution.

The above inferences, however, are far from certain; further studies are required to fully characterize the leaching process in terms of its capability and limitations as affected by different process parameters. Preparation of the wastes for leaching (e.g., initial size reduction of the filters and traps by chopping) may be necessary, primarily to keep the size of the leaching equipment to a minimum.

Dissolution of wastes. This method of approach also involves chemical dissolution of the wastes, but much more aggressive chemicals and process conditions are utilized in an attempt to dissolve the entire mass of the wastes to release the radionuclide content. Among the potential chemicals are mixed acids [e.g., aqua regia (HNO_3-HCl), or a mixture of hot HNO_3-H_2SO_4], and fused salts with an oxidant (e.g., molten Na_2CO_3 with air). The dissolution rate of stainless steels (potential constructional materials for cold

traps) in the HNO_3-H_2SO_4 is expected to be considerably lower than that in the aqua regia. Dissolution of Hastelloy alloys (sintered-metal filter materials) in both types of mixed acids will be even slower than that of stainless steels (possibly by a factor of ~10). Whether a molten-salt process similar to that being developed by Atomics International[20] will dissolve these materials within a few hours is less certain. It has been reported that thin-walled (< 2-mm) metallic components (e.g., carbon steel and nickel-based alloys) could be dissolved within a relatively short time in molten Na_2CO_3 at ~1000°C. On the other hand, a stainless steel 304 pipe (~5 mm thick, ~2 in. diam) and other high-chromium (> 10%) alloys would require a long time (>1 week) to dissolve completely.

Because of the highly corrosive nature of all the chemicals mentioned above, selection of the materials to be used for construction of the dissolver will be one of the major problems. The dissolver, using aqua regia as the solvent, may be fabricated of titanium since it was satisfactory in the dissolution of stainless-steel-clad fuels.[21] Other metals such as tantalum and noble metals would also be suitable, but they are much more costly than titanium. A refractory-lined vessel would probably be satisfactory for the molten-salt process.

Once the entire waste that contains radionuclides is in solution, chemical separation can proceed. The goal for such a separation is ultimate partitioning of a small volume of the highly radioactive portion of the waste from the bulk of the waste constituents which contain few or no radionuclides. Fairly complex process schemes may be required for this purpose, and the amount of the secondary wastes resulting from the separation might be prohibitive.

3.1.1.4 Assessment of process alternatives

Table 3 shows a comparative summary of the highlights of the four process alternatives. Based on the limited amount of available data, the leaching process appears to be the most promising of the four processes considered. The important features of this process include the simplicity of its equipment and operation, and its potential for separation and

Table 3. Comparison between different alternatives for processing of spent sintered-metal filters and cold traps

Process alternative	Advantages	Disadvantages
Compaction	Relatively simple equipment and operation	(1) Practically no reduction in specific radioactivity (Ci/kg) with limited volume reduction factor (2) Has tendency to produce airborne radioactive contamination
Melt-casting	(1) Can achieve higher volume reduction factor than compaction (2) Most of "nonvolatile" radionuclides will be fixed in cast ingots.	(1) High thermal energy consumption and severe service requirements due to high-temperature operation (2) Has potential of spreading radioactive contamination throughout melting system due to revaporization of semivolatile nuclides
Leaching	(1) Simplicity in equipment and operation (2) Has potential for separating the bulk of radionuclides and concentrating them into a small volume	Requires transfer of radionuclides to an aqueous phase which is potentially more dispersible than solids
Waste dissolution	Has potential of completely releasing radionuclides into a fluid phase which gives an opportunity for separation of radionuclides from nonradioactive waste constituents	(1) Dissolver and accessories must be made of special materials of construction because of highly corrosive nature of solvents. (2) Potential problems in handling molten-salt material (molten-salt process) (3) Requires complex process scheme to partition radioactive portion from nonradioactive portion (4) Requires transfer of radionuclides to an aqueous solution

concentration of the radionuclides into a small volume with a minimum amount of the secondary waste. The requirement that the radionuclides must first be dissolved (i.e., transferred from the solid phase to the aqueous phase) is not a serious disadvantage, since the aqueous solution will be processed in a controlled facility that prevents or minimizes any chance of dispersion.

The compaction method is also relatively simple in design and operation of the equipment. Nevertheless, the specific radioactivity still remains at a high level, and the radionuclides must be immobilized by incorporating them into some insoluble agent before the waste can be transported to a repository. This implies that the net volume reduction would be smaller than that obtainable by a simple compaction alone.

Both the melt-casting and waste-dissolution processes require drastic process conditions in terms of very high temperature or corrosive chemical environment. Consequently, costly constructional materials will be required for the process equipment. In the melt-casting process, the indication that the semivolatile radionuclides (which constitute a major portion of the radionuclides in the waste) would be lost from the waste during the melting step seems to defy the major purpose of the waste processing (i.e., collection and concentration of radionuclides). A similar statement is applicable to the waste dissolution process when molten salt is used as the solvent.

3.1.1.5 Research and development needs

Table 4 summarizes the R&D needs for characterization of the spent sintered-metal filters and cold traps as well as the four process alternatives for these wastes. The identification of the R&D needs is based on the discussion presented above, together with the review of the current state of development in related areas. The development data obtained from laboratory characterization studies of items 1, 3, 4, and 5 would facilitate not only the selection of the process, but also the definition of the R&D scope. For example, if the laboratory study of item 5 consistently gave a positive result (i.e., the presence of an appreciable amount of uranium), the compaction and melt-casting processes would be eliminated.

Table 4. Identification of R&D needs and available information for processing of spent sintered-metal filters and cold traps

	Research and development needs[a]	Information from related R&D program[b]
General waste characterization	(1) Materials of construction for filters and traps (1-c; e-c) (2) Criteria for and frequency of replacement of filters and traps (1-h; e-h) (3) Types, chemical and physical forms (e.g., surface contamination or compound formation with filter and trap materials, etc.), and deposition rates of nuclides (1-h; e-c, h) (4) Loading of radionuclides on filters and traps at the time of replacement (1-h; e-h) (5) Determine whether sufficient quantity of U is present to justify recovery (1-h; e-h)	(1) - (5) None
Process alternative		
Compaction	(1) Compaction pressure range for maximum volume reduction (1-c) (2) Extent of release of radionuclides to area around compactor (1-h; e-h) (3) Determine the need for off-gas cleanup facility for airborne contamination (1-c, h) (4) Feasibility of remote operation and maintenance of compactor (e-c, h) (5) Container for compacted wastes; methods of nuclide immobilization (e-c, h)	(1) LWR cladding hulls (NAP, M) (2) None (3) None (4) LWR cladding hulls (NAP) (5) LWR cladding hulls (M)
Melt-casting	(1) Adaptation of existing melting furnace and melt-casting technologies to wastes with high-level radioactivity; includes remote operation and maintenance (e-c, h) (2) Distribution of radionuclides in gas phase, molten metal, slag, and furnace system (1-h; e-c, h) (3) Leachability of radionuclides in ingot and slag (1-c, h) (4) Device for off-gas cleanup or recapture of radionuclides in gas phase (1-h; e-c, h) (5) Material of construction for melting system (1-c; e-c, h)	(1) LWR metal scraps, cladding hulls (M) (2) Same as above (M) (3) Same as above (M) (4) None (5) LWR metal scraps, cladding hulls (M)
Leaching	(1) Leaching behavior of radionuclides, and filter and trap materials in selected medium (e.g., HNO_3, HNO_3-H_2SO_4) under different process conditions (1-h; e-c, h) (2) Characteristics of off-gas, and need for off-gas cleanup (1-c, h) (3) Distribution of nuclides between leachate solution, and filter or trap (1-h) (4) Final processing of leachate, and leached filter and trap (1-c, h; e-c, h)	(1) - (3) None (4) LWR-HLLW, metal scraps, cladding hulls (M)
Waste dissolution	(1) Evaluation of dissolvents for filter and trap materials (e.g., rates of dissolution under varying process conditions; off-gas and other by-products) (1-c) (2) Evaluation of materials of construction for dissolver and accessories (1-c) (3) Distribution of radionuclides among solution, insolubles, off-gas, dissolver walls, and accessories (1-h; e-c, h) (4) Off-gas characteristics and method of off-gas treatment (1-h; e-c, h) (5) Chemical separation of radionuclides from large amount of nonradioactive waste constituents (1-c, h; e-c, h) (6) Final separate processing of radioactive and nonradioactive portions (1-c, h; e-c)	(1) LWR metal scraps, cladding hulls (stainless steels); none for Hastelloy X (2) Corrosion data (3) None (4) None (5) None (6) LWR-HLLW, -ILLW, and -LLLW (M)

[a]Symbols in parentheses represent scopes of the development needs as follows: 1, laboratory scale; e, engineering scale; c, cold (nonradioactive, includes tracer-level radioactivity) work; h, hot (radioactive) work.

[b]Symbols in parentheses indicate the status of available information: NAP, no active R&D program at present; M, modification of R&D program or type of available information required — some additional work may be needed.

A chemical process flowsheet specifically for uranium recovery would have to be developed based on the feed solution from either the leaching process or the waste dissolution process.

Also shown in Table 4 is an identification of the information available from other related R&D programs. Frequently, slight modification of the data or the program scope may produce useful information for the types of wastes under consideration. Some additional development work may still be necessary.

3.1.2 SiC hulls and insolubles

3.1.2.1 General characteristics

The waste SiC hulls form the major portion of the residue that is separated from the leached product slurry which is discharged from the fissile particle dissolver. A small insoluble fraction present in the residue contains mostly noble-metal fission products.

The SiC in the hulls is essentially of the cubic modified-β form and has a high degree of chemical and thermal stability (mp > 2700°C). SiC is chemically stable in most common reagents, but it interacts with molten alkalies at high temperatures. The bulk density of the waste SiC hulls is estimated at ~1.6 g/cm^3. The estimated generation rate of waste SiC hulls and insolubles is in the range ~2 to 2.5 metric tons (MT) per MT of uranium in the spent fuel, or ~100 kg per MT of heavy metal (uranium plus thorium). Based on the fuel reprocessing rate of 20,000 F.E. per year, as indicated in Table 2, the total volumetric rate of generation would be ~430 ft^3/year.

During irradiation of fuel particles in the reactor, fission products and smaller amounts of actinides tend to migrate out of the fuel kernel through the coated layers, thus displaying an "amoeba effect." The rate and extent of such migration vary with the fuel type (i.e., oxide or carbide), the nuclide type, irradiation temperature, and burnup, but the quantitative correlation between these variables has not yet been completely established. There is evidence[22,23] to indicate that migration of these radionuclides would be retarded by the SiC layer. These nuclides, however, interact with

the SiC layer and form some stable compounds that resist leaching by HNO_3 and several other mineral acids.

3.1.2.2 Radiochemical characteristics and radionuclide behavior

Behavior of radionuclides. The behavior of fission products (F.P.) in the HTGR type of coated fuel particles during irradiation has been a subject of intensive study[22-24] in the past few years. The recent results of an electron microprobe analysis of irradiated particles[22] revealed that the extent to which the F.P. diffuse away from the fuel kernel has no linear relationship to the burnup, but it is closely related to the solubility of F.P. in the kernel. In the UO_2 kernel, the major portion of the F.P. either dissolves into it or forms ceramic oxide precipitates [e.g., metallic inclusions of Mo-Tc-Ru-Rh-Pd and Pd-Te, and precipitates of (Sr, Ba)·(Zr,U, rare earths)O_x], and migration of these nuclides is retarded. In contrast, a far greater amount of F.P., especially alkalis, alkaline earths, and rare earths, were found in pyrocarbon coating layers than in the UC_2 kernel.

Variation of radiochemical composition with cooling time. The design of the interim storage facility and the processing facility for a high-level waste such as SiC hulls is influenced by the cooling time for the waste after its discharge from the reactor. The cooling time affects the design mainly in terms of the capacity, the radiation shielding, and the method and rate of heat dissipation required for these facilities.

Table 5 presents the estimated radiochemical composition and the rate of decay heat generation as functions of cooling time for key radionuclides in waste SiC hulls and insolubles from 25R fissile particles. The same type of information for 23R fissile particles is shown in Table 6. Computation of these data is based on the same assumptions as those described in ref. 1. These tables clearly demonstrate that fission products in the waste SiC hulls and insolubles account for practically all of the radioactivity and the decay heat even after a prolonged cooling time (i.e., 8 years). Initially (i.e., after 180 days of decay), ^{90}Sr, ^{106}Ru, ^{134}Cs, ^{137}Cs, and ^{144}Ce are the predominant fission product nuclides, contributing to nearly one-half of the total radioactivity and almost 40%

Table 5. Variation in estimated characteristics of waste SiC hulls and insolubles with cooling time[a] (from 25R fissile particles)

(Basis: 11,600 25R F.E./year)

Major nuclides	Radioactivity (Ci)			Rate of heat generation (W, β+γ)		
	Time after discharge from reactor			Time after discharge from reactor		
	180 days	5 years	8 years	180 days	5 years	8 years
Sr-90	1.90(6)	1.72(6)	1.60(6)	2.51(3)	2.25(3)	2.09(3)
Ru-106	9.52(5)	4.26(4)	5.36(3)	60	2.5	0.3
Sb-125	4.71(4)	1.49(4)	6.87(3)	190	60	30
I-129	0.5(3.8 kg)	0.5(3.8 kg)	0.5(3.8 kg)	~ 0	~ 0	~ 0
Cs-134	5.50(6)	1.20(6)	4.34(5)	5.82(4)	1.27(4)	4.60(3)
Cs-137	1.97(6)	1.78(6)	1.66(6)	3.22(3)	2.90(3)	2.72(3)
Ce-144	7.68(6)	1.39(5)	9.52(3)	6.28(3)	110	8
Eu-154	1.41(5)	9.40(4)	8.25(4)	940	770	680
Other F.P.	1.83(7)	3.92(6)	3.37(6)	1.11(5)	1.85(4)	1.65(4)
U-235	0.00[0.5 kg]	0.00[0.5 kg]	0.00[0.5 kg]	~ 0	~ 0	~ 0
U-236	0.1[1.3 kg]	0.1[1.3 kg]	0.1[1.3 kg]	0.00	0.00	0.00
Pu-238	1.53(3) [0.1 kg]	1.53(3) [0.1 kg]	1.53(3) [0.1 kg]	51	49	48
Other Pu	1.08(3) [0.5 kg]	870[0.4 kg]	759[0.3 kg]	0.2	0.2	0.1
Other actin.	430	180	170	15	11	10
Total F.P.	365(7)	8.91(6)	7.17(6)	1.82(5)	3.73(4)	2.66(4)
Total actin.	3.04(3)	2.58(3)	2.45(3)	66	60	58
Grand total	3.65(7)	8.91(6)	7.17(6)	1.82(5)	3.73(4)	2.66(4)

[a]Numbers in parentheses represent powers of 10.

Table 6. Estimated characteristics of waste SiC hulls and insolubles with cooling time[a]
(from 23R fissile particles)
(Basis: 7800 23R F.E./year)

Major nuclides	Radioactivity (Ci)			Rate of heat generation (W, β+γ)		
	Time after discharge from reactor			Time after discharge from reactor		
	180 days	5 years	8 years	180 days	5 years	8 years
Sr-90	1.61(6)	1.44(6)	1.34(6)	2.11(3)	1.89(3)	1.75(3)
Ru-106	5.49(5)	2.46(4)	3.09(3)	30	1.5	0.2
Sb-125	1.07(5)	3.37(4)	1.56(4)	430	140	20
I-129	0.4(2.9 kg)	0.4(2.9 kg)	0.4(2.9 kg)	~ 0	~ 0	~ 0
Cs-134	3.94(6)	8.58(5)	3.11(5)	4.17(4)	9.09(3)	3.29(3)
Cs-137	1.69(6)	1.52(6)	1.28(6)	2.77(3)	2.50(3)	2.33(3)
Ce-144	6.92(6)	1.25(5)	8.58(3)	5.66(3)	100	7
Eu-154	7.45(4)	6.12(4)	5.38(4)	610	500	440
Other F.P.	1.83(7)	3.48(6)	2.97(6)	1.05(5)	1.59(4)	1.36(4)
U-235	0.00[0.5 kg]	0.00[0.5 kg]	0.00[0.5 kg]	~ 0	~ 0	~ 0
U-236	0.04[0.6 kg]	0.04[0.6 kg]	0.04[0.6 kg]	~ 0	~ 0	~ 0
Pu-238	790[0.05 kg]	760[0.05 kg]	740[0.05 kg]	26	25	25
Other Pu	310[0.02 kg]	250[0.01 kg]	220[0.01 kg]	~ 0.0	~ 0.0	~ 0.0
Other actin.	170	80	30	5	2	2
Total F.P.	3.32(7)	7.54(6)	5.98(6)	1.58(5)	3.01(4)	2.14(4)
Total actin.	1.27(3)	1.09(3)	990	31	27	27
Grand total	3.32(7)	7.54(6)	5.98(6)	1.58(5)	3.01(4)	2.14(4)

[a]Numbers in parentheses represent powers of 10.

of the total rate of decay heat generation. After 5 to 8 years of cooling, however, the contribution from ^{106}Ru and ^{144}Ce becomes much less significant. In any case, the initial (180-day) values of total radioactivity and the rate of decay heat generation are reduced by factors of ~4 and ~5, respectively, after 5 years of cooling. The reduction in these properties by a 3-year extension of the cooling period (i.e., 8 years of cooling) is less dramatic.

Preliminary hot-cell experimental data. The data shown in Tables 5 and 6 are the calculated results of simplified assumptions, some of which must be confirmed through the experimental development work. Assumptions pertaining to the radionuclide distribution (Fig. 4 in ref. 1) were based on the limited amount of information derived from earlier hot-cell experiments using irradiated fuels (specially designed HTGR-type).[25]

To improve characterization of the waste SiC hulls and insolubles, a systematic hot-cell study is being carried out using mainly three different types of specially designed, irradiated HTGR fuels.[6] They are: TRISO UC_2-BISO ThC_2, TRISO UO_2-BISO ThO_2, and TRISO$(Th,U)C_2$-BISO ThC_2 types. Better understanding of the characteristics of the SiC hulls and insolubles (especially the distribution of nonleachable* nuclides) is important in the development of chemical flowsheets for processing of these wastes. The presence of a significant amount of nonleachable uranium and/or other fissionable nuclides may imply that the process flowsheet should include provision for recovery of these nuclides. Studies of the hot-cell data, including the radiochemical analytical data are still incomplete, and no definite conclusion has been reached as yet. The preliminary results for the waste SiC hulls and insolubles appear to show the following trends:

1. The quantities of nonleachable nuclides in the wastes generally vary with the type of nuclide, and to a lesser degree, with the fuel type.

---

*In this case, nonleachable nuclides refer to those that cannot be leached out by HNO_3 in the normal operation of the fissile particle dissolver.

2. The approximate orders of magnitude for the quantities of major nuclides retained by the wastes, in terms of weight percent of the nuclide in the original fuel, are:

	wt %
Total uranium	$\lesssim$1 to 3
Total thorium	$\lesssim$3 to 5
^{90}Sr	~ 1 to 2
^{134}Cs, ^{137}Cs	~ 10 for oxide fuel; ~ 2 to 4 for carbide fuel
^{144}Ce	~ 10
^{154}Eu	~ 25 for oxide fuel; ~ 1 to 2 for carbide fuel
^{106}Ru, ^{125}Sb	~ 50 to 70

3. The total radioactivity retained by the SiC wastes is estimated to be ~ 1000 Ci/kg, which is more than a factor of 10 higher than the lower limit of the high-level solid waste (> 70 Ci/kg; Table 1).

Although the figures for selected nuclides indicated in the second trend are preliminary in nature, the amounts of uranium and thorium seem to be greater than ten times those assumed for the calculated data in Tables 5 and 6 (i.e., 0.1 wt % for both uranium and thorium). If this trend should be confirmed, the need for development of a process to recover uranium would probably be justified.

3.1.2.3 Process alternatives

Several alternatives have been considered for processing of the waste SiC hulls and insolubles. They are based on essentially two different methods of approach, namely: (1) direct immobilization and packaging of the wastes, and (2) chemical separation of radionuclides from the non-radioactive components of the wastes followed by separate processing of the two fractions. The first approach is not applicable when recovery of uranium and/or other fissile materials is required.

Direct waste packaging and waste immobilization. At first observation, processing of the SiC hulls and insolubles may appear quite simple; they could simply be placed in proper storage containers for long-term isolation, since the radionuclides in this type of waste are "nonleachable"

in the dissolver solution (HNO_3). However, the conditions in the dissolver are completely different from those in the natural environment (e.g., geological isolation facility) where these wastes would be placed. No data are available at this time that would predict the behavior of these radionuclides in case of container failure in a geological isolation facility. This would permit the large surface area of the wastes to be exposed to a natural "leach solution" for an extremely long time, if water should make a way into the isolation facility. Since the radionuclides are in a powdery material, they are readily dispersible. Therefore, the simple alternative described above would not be a reliable means for isolation of this type of waste.

The next alternative is to incorporate the wastes into a matrix material that is chemically and physically stable. Thus, the powdery waste mass would be fixed in place (immobilized), and the exposed surface area of the waste will be greatly diminished. The matrix binder would also tend to eliminate or reduce the void volume and would presumably improve heat dissipation. Glass, concrete, organic polymer, and bitumen are among the matrix materials employed in fixation of low- and intermediate-level wastes. In view of the high-level radioactivity ($\geq \sim 1000$ Ci/kg) of the waste SiC hulls and insolubles, glass is probably the only material in this group suitable for immobilization. Incorporation of these wastes into a glass matrix may be carried out by modification of the commercially available technology for making borosilicate glasses. It involves melting of a mixture of Na_2CO_3, B_2O_3, and sand with the wastes at 1200 to 1400°C.

One of the major drawbacks associated with this method is dilution of the original wastes (or an equivalent increase in the waste volume) by addition of the matrix material. The radionuclide content of the original wastes is estimated to be ~1% by weight based on the weight of the wastes. The dilution factor could be ~5. Even at this much dilution, radioactivity of the wastes would still be high enough to be classified as high level. This implies that a much larger volume of high-level waste than that of the original waste would have to be handled.

Chemical separation. Partitioning of the radionuclides from the bulk of the nonradioactive constituents of the waste SiC hulls and insolubles seems to be justified based on (1) the very low concentration (weight basis) of radionuclides in the wastes (~1 wt %), and (2) the possible presence of a significant amount of uranium in the wastes to warrant its recovery. As a comparison in regard to the radionuclide concentration, the fission product oxide content of the solidified HLLW generally ranges from ~20 to 50 wt % depending upon the specific solidification technology (see Sect. 3.3 for a detailed discussion of the HLLW).

The major goal of this method is to develop a process that would partition the wastes into two portions, one containing nearly all radionuclides and the other containing the bulk of nonradioactive constituents. The process should generate little or no secondary waste. A provision for separation and recovery of uranium may be required. The portion containing mostly fission products and small amounts of residual uranium and other actinides may be concentrated and immobilized by conversion into a glass or ceramic material. The other portion, which has very low radioactivity, could be processed as low- or intermediate-level wastes.

The first step in the conceptual process scheme described above is to decompose the SiC hulls by some chemicals yet to be selected. The selected chemicals must:

1. display a selective attack on SiC hulls and little or no interaction with structural materials for the processing equipment;
2. have a high rate of reaction with SiC hulls at relatively low temperatures;
3. allow the heavy metals and fission products to be readily separated from the resulting mixture; and
4. produce a minimum amount of additional wastes from the process.

Among the chemicals known to attack SiC are halogens (e.g., Cl_2 and F_2), phosphoric acid, and molten alkaline salts. Phosphoric acid probably will not be suitable since the reaction is slow and erratic, and it produces a layer of SiO_2 coating on the surface of SiC particles. One of the drawbacks to the use of either Cl_2 or F_2 gas is their corrosiveness toward many of the common structural materials.

Table 7 contains a list of potential chemicals for decomposition of SiC hulls, including the rates of reaction estimated from the published literature. It has been reported[26] that the presence of oxygen frequently enhances the reaction between molten salt and SiC. The oxygen may come either from the decomposition of the molten salt (e.g., Na_2O_2 and KNO_3) or from the air dissolved in the molten salt.

According to Table 7, the molten mixture of $KOH-KNO_3$ (1:4) appears to be the most suitable chemical of all those listed for decomposition of SiC hulls, since a high rate of reaction may be expected at a relatively low temperature (~500°C). This assumption was confirmed at least qualitatively in a brief scoping study,[6] in which a comparison was made with the reactions of SiC (nonradioactive) and three different chemicals, $KOH-KNO_3$ (1:4), $K_2CO_3-KNO_3$ (1:4), and H_3PO_4. For example, the reaction of the molten $KOH-KNO_3$ with SiC was ~90% complete at ~550°C within ~1.5 hr; the molten $K_2CO_3-KNO_3$ attacked SiC much more slowly although the reaction temperature was appreciably higher (~900°C). Although the initial reaction of H_3PO_4 with SiC was relatively fast, it then slowed down, presumably due to formation of the SiO_2 coating on the surface of SiC particles.

A more systematic and comprehensive study will be required to critically evaluate potential chemicals for decomposition of SiC under different process conditions. In the selection of a suitable chemical for SiC decomposition, consideration should also be given to the effects of the decomposition products on the complexity of the subsequent processing steps, and on the amount and property of the secondary wastes.

3.1.2.4 Assessment of process alternatives

Table 8 summarizes the highlights of the three process alternatives discussed above in terms of their relative advantages and disadvantages. Processing of the waste SiC hulls and insolubles by the chemical separation process is probably the best approach. This is based on the assumption that the radionuclides in the wastes would have to be concentrated and immobilized in order to avoid handling of either a powdery form or a large volume of "diluted" high-level wastes. Should the presence of an appreciable amount

Table 7. Potential chemicals for decomposition of SiC hulls

Chemical	Melting point (°C)	Reaction temp. (°C)	Relative reaction rate
Cl_2	-	1000	Low
F_2	-	300	Moderate
Na_2CO_3	851	900	Low
NaOH	318	900	Moderate
KOH	360	400	Moderate
KNO_3	336	600	Low
Na_2O_2	460[a]	700	High
$NaOH-Na_2O_2$ (3:1)	-	700	High
$KOH-KNO_3$ (1:4)	~260	500	High
Na_2SO_4-NaF (1:1)	-	950	High

[a]Decomposes.

Table 8. Comparison between different alternatives for processing of waste SiC hulls and insolubles

Process alternative	Advantages	Disadvantages
Direct waste packaging	Very simple equipment and operation	Fine particle sizes and large surface area of wastes tend to make them readily dispersible during packaging and in case of container failure
Waste immobilization in matrix material	(1) Relatively simple process scheme (2) Effectively fix wastes in place, and reduce exposed surface area of the waste particles	(1) Considerable increase in waste volume (2) For glass matrix: requires high-temperature material for equipment, high thermal energy consumption (operating temp, 1200-1400°C) (3) Some nuclides (e.g., Cs, Ru, etc.) may be released during melting operation.
Chemical separation	(1) Potential for separation and concentration of radionuclides into a small volume (2) Potential for recovery of uranium and other fissile material	(1) Process scheme is somewhat more involved than two alternatives above. (2) Requires transfer of radionuclides into an aqueous phase which is potentially more dispersible than solids (3) Generation of secondary waste

of uranium in the wastes be confirmed (see Preliminary Hot-Cell Experimental Data in Sect. 3.1.2.2), the chemical separation process would be the only alternative applicable to uranium recovery as well as radionuclide separation and concentration.

Packaging and storage of the unprocessed wastes as a means of ultimate isolation probably will not be satisfactory, mainly because of the dispersible nature of the powdery waste form. Immobilization of the wastes into a matrix material such as glass seems to be a simple and effective way of drastically reducing the probability of dispersal. This waste form will presumably be more acceptable for long-term isolation than the unprocessed powder form. One major drawback to this method is the increase in the volume of the high-level waste to be handled. Also, there may be some technical problems associated with remote operation and maintenance of equipment that processes a molten mass of high-level radioactive material at high temperatures (~1200 to 1400°C).

3.1.2.5 Research and development needs

Table 9 lists the suggested areas to be investigated. These will provide the primary basis for an evaluation of technical and economic feasibility of the individual process alternatives.

It is desirable that the R&D work for the chemical separation process be emphasized because of the reasons listed below:

1. The radionuclide content of the SiC hulls and insolubles is ~1 wt % as discharged from the dissolver (after drying), despite their high-level radioactivity. When compared with ~20 to 50 wt % of fission product oxides in the solidified HLLW, the need for concentration is indicated.
2. Based on the recent hot-cell data, there are indications that recovery of uranium from these wastes may be necessary.
3. Much of the basic technical data required for the chemical separation process is not available. This is in contrast with the waste immobilization process based on the glass matrix for which the basic glass technology is already available from the commercial source. In addition, R&D activities in vitrification of the LWR-HLLW should provide useful information on the incorporation of radioactive material into glass.

Table 9. Identification of R&D needs and available information for waste SiC hulls and insolubles

	Research and development needs[a]	Information from related R&D program[b]
General waste characterization	(1) Physical properties of the wastes - e.g., particle size distribution, bulk density, etc. (1-c, h) (2) Quantities, distribution, and characteristics (including leachability) of fission products in the wastes as affected by irradiation and head-end processing histories, and fuel types (1-h; e-h) (3) Same type of data as in (2) for U, Th, and Pu (1-h; e-h)	(1) - (3): None
Process alternative		
Direct waste packaging	(1) Feasibility of remote operation and maintenance of the packaging equipment (e-c, h) (2) Container for packaging of the wastes (e-c, h)	(1) LWR cladding hulls (2) LWR cladding hulls (M)
Waste immobilization in matrix material	(1) Adaptation of commercial glass technology to the wastes having high radioactivity; includes remote operation and maintenance (1-h; e-c, h) (2) Distribution of radionuclides among gas phase, matrix material, and equipment surfaces (1-h; e-h) (3) Leachability of radionuclides in immobilized wastes (1-h; e-h)	(1) Commercial glass technology (M); LWR-HLLW vitrification (M) (2) None (3) None
Chemical separation	(1) Evaluation of chemicals for SiC decomposition - e.g., composition of chemicals, reaction rate under different process conditions, and reaction products (1-c,h; e-c,h) (2) Distribution of radionuclides among molten salt, insolubles, off-gas, and equipment surfaces (1-h; e-h) (3) Material of construction for molten-salt reaction vessel (1-c; e-h) (4) Process schemes for separation of radionuclides from nonradioactive constituents and for uranium recovery (1-c, h; e-c, h)	(1) Chemical data for SiC (M) (2) None (3) Corrosion data (4) LWR-TRU recovery (M)

[a]Symbols in parentheses represent scopes of the development needs as follows: 1, laboratory scale; e, engineering scale; c, cold (nonradioactive, includes tracer-level radioactivity) work; h, hot (radioactive) work.

[b]Symbols in parentheses indicate the status of available information: NAP, no active R&D program at present; M, modification of R&D program or type of available information required— some additional development work may be needed.

3.1.3 Retired fissile particles and clinkers

3.1.3.1 General characteristics

Retired fissile particles. This type of material results from the head-end processing of the 25W fuel elements up to the secondary crushing step (i.e., after primary crushing and burning, and separation from the fertile particles). The outer high-density graphite coating of these fissile particles had been removed in the primary burning, but the individual fuel kernels are still protected by three layers of coating: the low-density graphite (buffer layer), inner high-density graphite, and SiC layers, in that order, toward the outside. The size of these particles would be ~500 μm. They will be mixed with small fractions of broken particles as well as cross-over fertile particles. The kernels of the 25W fissile particles contain once-recycled uranium, the ^{235}U content of which had declined to ~4 to 5% (as compared with ~93% ^{235}U in the fresh fuel). Because of the excessively high ^{236}U content (~70% of the total uranium is ^{236}U, which is a neutron poison), the kernels are not suitable for further recycle in the HTGR. Based on the assumed rate of fuel reprocessing listed in Table 2 (a total of 20,000 F.E./year, 600 of which are 25W F.E./year), the rate of generation of 25W fissile particles is estimated at ~4 MT/year or ~100 ft^3/year.

Clinkers. Clinkers are sintered masses of fuel particles produced under abnormal operating conditions in the primary and/or secondary burners. Although the exact causes for clinker formation have not yet been determined, an uncontrollable temperature excursion in the burner tends to promote formation of such masses. However, there is no way of predicting such an occurrence, nor is there any reliable method for estimating the rate of clinker formation. Clinkers of widely different sizes have been observed.

3.1.3.2 Radiochemical characteristics

Retired fissile particles. The complete spectra of fission products and actinides are present in these fissile particles; therefore, this type of waste stream has the highest specific radioactivity (~650 kCi/ft^3 at 180 days of cooling) and specific rate of heat generation (~3.7 kW/ft^3

at 180 days of cooling) of all HTGR waste streams. Initially (180 days), radionuclides contributing to the major portions of the radioactivity (~95%) and the decay heat (~82%) are the fission products, as illustrated in Table 10. Fission products are still the major contributors (~81%) to the radioactivity even after 8 years of cooling. On the other hand, the role of the major contributors to the decay heat generation shifts from fission products to actinides after prolonged cooling (5 to 8 years). Actinides account for ~61% of the total heat generation at the end of the 8-year cooling period. In any case, cooling of the retired fissile particles for 8 years will reduce both the total radioactivity and the total heat generation rate by a factor of ~4 to 5. Most of the reduction is attributable to the decay of fission products.

Among the predominant fission products are ^{90}Sr, ^{106}Ru, ^{134}Cs, ^{137}Cs, and ^{144}Ce, which supply over 40% of the total radioactivity and ~1/4 of the total heat generated at 180 days of cooling. Plutonium isotopes, particularly ^{238}Pu, represent the controlling actinides. They account for ~90 to 95% of total actinide radioactivity, and ~80 to 90% of the total heat generated by actinides, nearly all of which is derived from ^{238}Pu.

Clinkers. It would be practically impossible to obtain a "representative" sample of clinkers because they are formed under abnormal or "upset" conditions that are unpredictable. Nevertheless, since they are typically sintered masses of fuel particles, their radiochemical characteristics are expected to be close to those of the original fuel particles.

Recently, a batch of fuel particle product from the primary burner containing both clinkered and normal portions was processed separately through the secondary crushing, burning, and dissolution steps in the hot cell.[6] Analytical results of the SiC hulls and insolubles separated from the dissolver products have indicated that the concentrations of the major fission products and actinides (uranium and plutonium) in the clinkered fraction were considerably higher (~3 to 65 times depending upon specific nuclides) than those in the normal fraction.

Table 10. Variation in estimated radiochemical composition of retired fissile particles with cooling time[a]

(Basis: 600 25W F.E./year)

Major nuclides	Radioactivity (Ci) Time after discharge from reactor			Rate of heat generation (W, β+γ) Time after discharge from reactor		
	180 days	5 years	8 years	180 days	5 years	8 years
Sr-90	2.47(6)	2.21(6)	2.06(6)	3.24(3)	2.90(3)	2.69(3)
Ru-106	3.84(6)	1.72(5)	2.16(4)	230	10	1
Sb-125	1.06(5)	3.37(4)	1.55(4)	430	140	60
I-129	0.3(1.8 kg)	0.3(1.8 kg)	0.3(1.8 kg)	1(-3)	1(-3)	1(-3)
Cs-134	7.42(6)	1.62(6)	5.87(5)	7.87(4)	1.72(4)	6.21(3)
Cs-137	2.78(6)	2.51(6)	2.34(6)	4.55(3)	4.10(3)	3.83(3)
Ce-144	1.20(7)	2.16(5)	1.49(4)	9.81(3)	180	10
Eu-154	1.67(5)	1.37(5)	1.20(5)	1.37(3)	1.13(3)	990
Other F.P.	3.35(7)	5.62(6)	4.68(6)	2.06(5)	2.63(4)	2.14(4)
U-235	0.1(63 kg)	0.1(63 kg)	0.1(63 kg)	4(-3)	4(-3)	4(-3)
U-236	60(970 kg)	60(970 kg)	60(970 kg)	2	2	2
Pu-238	1.63(6)[97 kg]	1.58(6)[94 kg]	1.54(6)[91 kg]	5.41(4)	5.23(4)	5.11(4)
Other Pu	9.61(5)[53 kg]	7.76(5)[43 kg]	6.74(5)[37 kg]	170	170	170
Other actin.	3.26(5)	1.33(5)	1.24(5)	1.16(4)	4.61(3)	4.24(3)
Total F.P.	6.23(7)	1.25(7)	9.84(6)	3.04(5)	5.20(4)	3.52(4)
Total actin.	2.92(6)	2.49(6)	2.34(6)	6.59(4)	5.71(4)	5.55(4)
Grand total	6.52(7)	1.50(7)	1.22(7)	3.70(5)	1.09(5)	9.07(4)

[a]Numbers in parentheses represent powers of 10.

3.1.3.3 Process alternatives

Although both retired fissile (or 25W) particles and clinkers are tentatively classified as the "wastes," they can also be considered as the "scraps" since they contain large amounts of uranium and other fissile materials that are potentially recoverable. Despite the high ^{236}U content of 25W particles, which makes them uneconomical to be reused in the HTGR, there might be a future possibility that uranium would be recovered and utilized in some other types of reactors after removal of the bulk of the ^{236}U. The same process alternatives are presumably applicable to both 25W particles and clinkers with minor modifications. Selection of a process among the alternatives listed below would be governed primarily by whether these materials should be treated as wastes or scraps.

Direct packaging. This simplest method involves packaging of either 25W particles or clinkers as the waste in specially designed containers for transportation and storage without any pretreatment. They are then transported to a retrievable isolation facility. The possible problem with this alternative is that some fractions of either 25W particles or clinkers would have broken particles that tend to spread the radioactive contamination. Since clinkers are produced in widely different sizes and shapes, some of them may have to be broken down to suitable sizes for the container, which would result in additional broken particles.

Immobilization before packaging. In order to minimize the chance of spreading the radioactive contamination, this method would incorporate the 25W particles or clinkers into a matrix material (probably glass) before being packaged for long-term isolation. Such processing may be carried out either independently or in combination with vitrification of the HLLW. One shortcoming of the immobilization approach is that it would be extremely difficult in the future to retrieve these materials for further processing, including recovery of fissile material.

Chemical processing. If it should be decided that either 25W particles or clinkers were to be handled as scraps instead of wastes, they could presumably be processed through the head-end and solvent extraction systems of the fuel reprocessing plant. (See ref. 1 for details of the steps

involved in fuel reprocessing.) The 25W particles could start with the secondary crushing, while the clinkers may have to go through the primary crusher first. Even when they are handled as the wastes, chemical processing of these materials would be needed if future Federal regulations should require that the long-lived nuclides, mainly actinides, are to be segregated from the fission products and placed in separate isolation facilities (include transmutation of actinides).

3.1.3.4 Assessment of process alternatives

It appears that the direct packaging of the 25W particles or clinkers without any pretreatment may be acceptable for onsite storage on a temporary basis with a provision for retrieval. If no retrieval of these materials is anticipated, they must be immobilized before they are packaged and placed in the isolation facility. Clinkers are more likely to be subject to chemical processing for recovery of fuel values than are the 25W particles, because the former presumably contain a significant amount of uranium that could be recycled to the HTGR. Advantages and disadvantages of the individual process alternatives are compared in Table 11.

3.1.3.5 Research and development needs

Important topics pertaining to processing of 25W particles and clinkers that are to be studied are itemized in Table 12. Separate characterization of clinkers is necessary because their properties are expected to vary considerably depending upon the conditions under which they form. The items to be investigated for 25W particles are mainly for confirmation of the calculated radiochemical characteristics and for acquiring the statistical breakage and crossover data.

The R&D needs for the first two process alternatives (1 and 2) are similar to those for the corresponding alternatives for waste SiC hulls and insolubles (Table 9). Accordingly, each pair of the corresponding alternatives may be consolidated in such a way as to minimize duplication of the efforts. Chemical processing of 25W particles would be identical to that of other types of fissile particles (i.e., 25R and 23R), and should not require a separate R&D task. Some additional R&D work would be needed to alleviate possible problems associated with irregular properties of clinkers.

Table 11. Comparison between different alternatives for processing of retired fissile particles and clinkers

Process alternative	Advantages	Disadvantages
Direct packaging	Very simple equipment and operation	Presence of broken fuel particles and small fuel particle sizes (~ 500 μ) would be conducive to spread of radioactive contamination during packaging and in case of container failure.
Immobilization in matrix material	(1) Relatively simple process scheme (2) Drastically reduces chance of spreading radioactive contamination	(1) Extremely difficult to retrieve immobilized wastes for chemical processing to recover fuel values (2) Use of matrix material with high chemical and thermal stability would require high-temperature material for equipment and high energy consumption (3) Potential problems associated with handling of high-temperature molten mass
Chemical processing	(1) Capability of recovering fuel values (2) Could utilize equipment and facilities available at HTGR fuel reprocessing plant	(1) Would require a somewhat more complex process scheme than the other two alternatives (2) Would require transfer of radionuclides into gaseous and aqueous phases for processing.

Table 12. Identification of R&D needs and available information for retired fissile (25W) particles and clinkers

Subject	Research and development needs[a]	Information from related R&D program[b]
General waste characterization	25W particles: (1) Radiochemical characteristics, including isotopic composition (1-h); (2) approximate fraction of broken particles and crossover of fertile particles (1-h; e-h) Clinkers: (3) Physical, chemical and radiochemical properties; includes particle size distribution, distribution of radionuclides and nonradioactive constituents, bulk density, etc., as affected by process conditions (1-c, h; e-h)	(1) - (3): None
Process alternative		
Direct packaging	(1) Remote operation and maintenance of packaging equipment, possibly including a crusher for reducing clinkers to certain manageable sizes (e-c, h)	(1) LWR cladding hulls (M)
	(2) Container for packaging (e-c, h)	(2) LWR cladding hulls (M)
Immobilization in matrix material	(1) Feasibility of combining with HLLW in vitrification step (1-h; e-h)	(1) None
	(2) Adaptation of commercial glass technology to high-radioactivity material; includes remote operation and maintenance (1-h; e-c, h)	(2) Commercial glass technology (M); LWR-HLLW vitrification (M)
	(3) Distribution of radionuclides among gas phase, matrix material, and equipment surfaces (1-h; e-h)	(3) None
	(4) Leachability of radionuclides in immobilized material (1-h; e-h)	(4) None
Chemical processing	(1) Adaptation of HTGR reprocessing technology to processing of clinkers, especially in crushing and leaching (1-h; e-h)	(1) HTGR reprocessing (M)

[a]Symbols in parentheses represent scopes of the development needs as follows: 1, laboratory scale; e, engineering scale; c, cold (nonradioactive, includes tracer-level radioactivity) work; h, hot (radioactive) work.

[b]Symbols in parentheses indicate the status of available information: NAP, no active R&D program at present; M, modification of R&D program or type of available information required — some additional development work may be needed.

3.2 Non-High-Level Solid Wastes Including Transuranic Wastes

Solid wastes in this category are:

1. reflector blocks discharged from the HTGR at a predetermined time interval;
2. miscellaneous solid wastes consisting of HEPA filters, failed tools and equipment, contaminated rags, gloves, and clothes, etc.;
3. spent catalysts and zeolites from the off-gas cleanup system;
4. crud and ash resulting from treatment of the primary wastes, mainly from the solvent extraction system; and
5. spent ion exchange resins, filter cake, and evaporator bottoms generated in the treatment of liquid wastes, chiefly from the solvent extraction system.

According to the present ERDA guidelines, transuranic wastes are those wastes containing predominantly alpha radioactivity in excess of 10 μCi per kilogram of solids. However, should the wastes contain significant levels of beta and gamma radioactivity, they are usually processed as either intermediate- or high-level wastes even though the alpha radioactivity exceeds 10 μCi/kg.

3.2.1 Spent reflector blocks

3.2.1.1 General characteristics

The replaceable reflector blocks are those directly surrounding the active reactor core of an HTGR. They are hexagonal graphite blocks, ~360 mm across the flats and either 793 mm (full-length) or 396 mm (half-length) long,[27] which are similar in shape to the fuel elements. These reflector blocks contain different numbers of helium coolant holes that are determined by their locations in the reactor core. Neutron absorbers (boronated graphite rods) are also present in some of the reflector blocks.

Because of the accumulation of neutron activation products and radionuclides transported from the reactor core by the helium coolant gas, the reflector blocks are scheduled to be replaced on an 8-year cycle. The average rate of replacement of the reflector blocks consistent with a reprocessing plant having a capacity of 20,000 F.E./year is estimated[27] at 5000 mixed blocks/year or an equivalent of 3550 full-size blocks/year.

3.2.1.2 Radiochemical characteristics and radionuclide behavior

Radioactivity in the reflector blocks originates primarily from two major sources: the impurities in the blocks which are activated through interaction with neutrons; and broken fuel particles in the reactor core, from which fission products and possibly traces of actinides are transported by the helium coolant gas and deposited in the coolant holes of the reflector blocks.

Based on the calculated radiochemical composition,[27] the major radionuclides in the reflector blocks are ^{3}H, ^{14}C, ^{90}Sr, ^{95}Zr, ^{95}Nb, ^{103}Ru, ^{110m}Ag, ^{125}Sb, ^{129m}Te, ^{134}Cs, ^{137}Cs, and ^{144}Ce. The total radioactivity (8-year accumulation, 100-day cooling) of each of the side and upper reflector blocks is ~5 Ci per full-size block, while that of the bottom reflector block is ~30 Ci per full-size block. Among the significant contributors to these total radioactivities are ^{134}Cs, ^{137}Cs, ^{90}Sr, ^{110m}Ag, and ^{129m}Te, approximately in that order. The estimated dose rates at 1 ft from the surface of the block are ~4-7 R/hr at the upper end and side and ~32-33 R/hr at the lower side and end.

3.2.1.3 Process alternatives

There are essentially three process alternatives available for handling the spent reflector blocks. Shallow-land burial (~20 ft deep) of the reflector blocks after transport from the HTGR plant to the burial site would be the most direct and simplest method of disposal. The next simplest alternative is to crush and burn the blocks followed by treatment of the off-gas streams, but without any treatment or fixation of $^{14}CO_2$. The final alternative follows the same process steps as those in the preceding, except that $^{14}CO_2$ is fixed as $CaCO_3$ and subsequently buried.

Shallow-land burial. This method involves shipping the reflector blocks to a selected commercial burial site and burying them without crushing or any other means of size reduction. Packaging of the blocks in containers will probably be required before burial, regardless of whether they are classified as transuranic wastes. A study by the General Atomic Company[27] (GAC) has considered western arid burial sites where

there is no high water-table problem and rainfall is low. Although shallow-land burial of the reflector blocks will presumably be permitted under the present regulations, there are speculations that such a practice may be forbidden by future Federal regulations.

Crush-burn. The reflector blocks first undergo size reduction to ~3/16-in. particles by a crushing system similar to that used for primary crushing of fuel elements. The crushed particles are then burned in a CO_2-O_2 gas stream in a fluidized-bed burner. The burner off-gas stream is expected to contain not only volatile radionuclides, but also semivolatile and particulate radionuclides. Accordingly, it must be treated to reduce the radionuclide levels to far below the limits imposed by the Federal regulations. The off-gas cleanup facility for the reprocessing head-end system may be adapted to the present case to include at least the units for removal of semivolatile and particulate nuclides (i.e., sintered-metal filter and cold trap), iodine, and tritium. An oxidizer for CO and tritium may also be required upstream of the tritium removal unit. The off-gas thus treated would be released to the environment. This process alternative assumes that the ^{85}Kr and ^{14}C contents of the off-gas stream are negligible.

Crush-burn and ^{14}C fixation. This alternative is essentially the same as the preceding, but it assumes the $^{14}CO_2$ content to be sufficiently high to require fixation by conversion to $Ca^{14}CO_3$. The most promising conversion process appears to be the one based on the direct reaction of the ^{14}C-bearing CO_2 gas stream with slaked lime to form $CaCO_3$ precipitates. The mass of $CaCO_3$ produced would have to be isolated from the biosphere either by land burial or storage in a safer isolation repository. The fixation process is described in more detail in the treatment of $^{14}CO_2$ resulting from head-end processing of the fuel elements (see Sect. 3.5.2.2).

3.2.1.4 Assessment of process alternatives

Shallow-land burial of reflector blocks appears to be the simplest of the three alternatives under consideration. However, the costs of this alternative are not necessarily lower than those of the other two. In fact, the relative costs of the three process alternatives are governed by two

major factors, in addition to individual process parameters: (1) operating capacity (number of blocks per year), and (2) the waste classification of the spent reflector blocks (i.e., whether they are classified as alpha wastes or not). Following a recent economic evaluation of the disposal of reflector blocks by GAC,[27] the relative costs of these three alternatives based on the capacity of more than 3550 blocks per year are summarized below.

If non-alpha wastes:

(a) Process 1 $\cong$ Process 2

(b) Process 3 > Process 1 (at any capacity)

(c) Process 3 > Process 2

If alpha wastes:

(a) Process 1 >> Process 2 or 3

(b) Process 3 > Process 2

The process numbers given here identify the alternatives listed in Table 13, which also compares their relative advantages and disadvantages.

Although process 2 (crush-burn) almost completely eliminates reflector blocks by burning, it generates several secondary waste streams, including: (1) the burner ash containing most of the nonvolatile radionuclides, (2) spent sintered-metal filters and cold traps contaminated with semivolatile and particulate nuclides, and (3) spent catalysts, zeolites, and molecular sieves loaded principally with volatile and semivolatile nuclides (e.g., I_2, Cs, Ru, $^3H_2$, etc.), and tritiated water -- all from the off-gas cleanup system. Nevertheless, the total volume of these secondary waste streams would be considerably less than that of the original reflector blocks.

Process 3 provides near-complete control of all the radioactive effluents, including control of the ^{14}C-contaminated CO_2 gas stream. One significant shortcoming is the drastic increase in the volume of the secondary solid waste streams [mainly attributable to the ^{14}C fixation process (as $CaCO_3$)] as compared with the original volume of the reflector blocks. On the other hand, this shortcoming becomes unimportant if the burial method should be prohibited in the future and/or the reflector

Table 13. Comparison between different alternatives for processing of spent reflector blocks

Process alternative	Advantages	Disadvantages
1. Shallow-land burial	Very simple operation	(1) Possibility of radionuclides being dispersed by water in case of container failure (2) Relatively high transportation cost
2. Crush-burn	(1) Capability for near-complete elimination of the primary waste (reflector blocks) (2) No requirement for transportation and isolation of the primary waste	(1) Transfer of some radionuclides to the gas phase (2) Require higher costs for capital and operation because of high temperature involved and also because of the need to treat off-gas (3) Incapable of controlling ^{85}Kr and ^{14}C should they exceed the regulatory limits
3. Crush-burn and ^{14}C fixation	(1) Capability for near-complete elimination of the primary waste (reflector blocks) (2) Has means for ^{14}C control	(1) and (2): Same as above (3) ^{14}C fixation as $CaCO_3$ would add considerable sum of costs to the total (4) No ^{85}Kr control equipment

blocks contain higher concentrations of alpha emitters than the level classified as alpha wastes.

3.2.1.5 Research and development needs

The R&D needs in characterization of spent reflector blocks listed in Table 14 are important, especially in confirming the calculated quantities of fission products and in determining the actinide contents. Accurate prediction of the quantities of fission products and actinides in spent reflector blocks is considerably more difficult than that of neutron-activation products. This is mainly because the former two types of nuclides originate in the broken fuel particles in the reactor core; the transport mechanisms of these nuclides are complex and not well understood.

Development work for the burial method would be concerned mostly with: (1) the design of the disposal container for the reflector blocks, and (2) evaluation of the container material with regard to its long-term interaction with selected soil samples. Migration behavior in the soils of radionuclides leached out of the reflector blocks can presumably be inferred from the results of the current development programs sponsored by the Office of Waste Isolation (OWI). Efforts required in the R&D needs for processes 2 and 3 (Table 14) are expected to be minimal since most of the fundamental data would be available from other on-going R&D programs.

3.2.2 Spent catalysts and molecular sieves

3.2.2.1 General characteristics

These solid wastes are discharged from the off-gas cleanup system (for the off-gas stream from the head-end processing of fuel elements) after their performances decline below the design requirements. Spent catalysts originate from two sources, the NO_x decomposition unit and the off-gas oxidizer (for oxidation of CO and tritium). The catalysts from the former are ~1/16-in.-diam zeolite extrudates (hydrogen mordenites), while those from the latter will probably be an oxidation catalyst for

Table 14. Identification of R&D needs and available information for spent reflector blocks

	Research and development needs[a]	Information from related R&D programs[b]
General waste characterization	(1) Quantities, distribution, and characteristics (including leachability) of radionuclides in reflector blocks as affected by irradiation history (1-h; e-h) (2) Mass transfer data for selected nuclides under simulated transport condition from reactor core to reflector blocks (1-c, h)	(1) - (2): None
Process alternative		
Shallow-land burial	(1) Disposable container for spent reflector blocks for transport and burial (e-c) (2) Interaction of selected soil samples with the container material and with graphite material containing tracers of important nuclides (1-c, h)	(1) None (2) OWI program on migration of nuclides in soils (M)
Crush-burn	(1) Adaptation of primary crushing-burning technology from the head-end system to processing of reflector blocks (e-c, h) (2) Modification of off-gas cleanup system (for HTGR head-end system) to treat burner off-gas (e-c)	(1) HTGR reprocessing - head-end system (M) (2) HTGR reprocessing - off-gas cleanup (M)
Crush-burn and ^{14}C fixation	(1) - (2): Same as above (3) Design data for ^{14}C fixation as $CaCO_3$ (e-c) (4) Method of isolation for $CaCO_3$ contaminated with ^{14}C and other nuclides (1-c; e-c)	(1) - (2): Same as above (3) ThU Waste Program and LWR Waste Program on ^{14}C fixation (4) Same as above

[a]Symbols in parentheses represent scopes of the development needs as follows: 1, laboratory scale; e, engineering scale; c, cold (nonradioactive, includes tracer-level radioactivity) work; h, hot (radioactive) work.

[b]Symbols in parentheses indicate the status of available information: NAP, no active R&D program at present; M, Modification of R&D program or type of available information required — some additional development work may be needed.

both CO and H_2 (the selection has not yet been finalized). Both types of spent catalysts will probably be contaminated with radionuclides and nonradioactive poisons in the off-gas.

Spent molecular sieves are synthetic crystalline zeolites of two different cation forms. Those from the tritium removal unit are of the sodium form (e.g., Linde Type 3A), loaded primarily with residual tritiated water. Those discharged from the iodine removal unit are of the silver-exchanged form (e.g., Linde Type 13X), commonly called silver zeolites, loaded with iodine. Also, trace quantities of other radionuclides as well as nonradioactive impurities, are expected to be retained by these spent molecular sieves. Molecular sieves of other cation forms (e.g., cadmium and lead zeolites) have been suggested for use in iodine removal in place of high-priced silver zeolite, but their performances appear to be unsatisfactory.

The current R&D data for various components of the off-gas cleanup system do not permit accurate estimation of the generation rates of these waste streams. The order-of-magnitude estimates, on a per-year basis, for a reprocessing plant with an annual capacity of 20,000 F.E. are: ~140 ft^3 for both types of spent catalysts, ~150 ft^3 of spent molecular sieve from the tritium removal unit, and ~1000 ft^3 of spent silver zeolite from the iodine removal unit.

3.2.2.2 Radiochemical and chemical contaminants

Distributions of radionuclides and nonradioactive contaminants on the spent catalysts are rather difficult to estimate since no suitable experimental data are presently available to use as guidelines. Based on the estimated catalyst properties and the calculated compositions and other properties of the off-gas streams, the contaminants on the catalysts from the NO_x decomposition unit would probably include residual amounts of water (of the order of ~2 wt %), NH_3, and NO_x, as well as traces of iodine and decay daughters of ^{220}Rn. Similarly, the catalysts from the off-gas oxidation unit would be contaminated with small amounts of SO_2 and CO_2, and trace quantities of (but appreciably higher than those on NO_x decomposition catalysts) iodine, decay daughters of ^{220}Rn, HTO, and semivolatile radionuclides.

The major contaminant on spent silver zeolite is iodine (of the order of 10 mCi/kg); however, traces of tritiated water, ^{220}Rn decay daughters, and semivolatile radionuclides are also expected to be present. The spent molecular sieves from the tritium removal unit will contain a residual amount (of the order of ~500 mCi/kg) of tritiated water, plus traces of iodine and other radionuclides found on the spent silver zeolite.

3.2.2.3 Process alternatives

Information pertaining to the nature of various contaminants taken up by the spent catalysts and molecular sieves is quite limited. Nevertheless, such contaminants are present presumably as physically or chemically adsorbed species. Evidence indicates that the iodine isotopes in the silver zeolite are relatively stable chemical species; in any case, they are probably leachable and dispersible and, therefore, must be immobilized by some means.

A number of immobilization technologies being developed for non-high-level LWR wastes might be adaptable to immobilization of radionuclides in the spent catalysts and molecular sieves. Among these are: (1) direct packaging, (2) incorporation in cement with additives, (3) immobilization in polymer-impregnated concrete, and (4) sealing with or conversion into glass. A brief discussion of these alternatives is presented in the paragraphs that follow.

Direct packaging. Double-contained packaging of the spent catalysts or molecular sieves may be acceptable at present. This involves initial packaging of the wastes in a disposable container followed by overpacking in a DOT-approved outer container. From the long-term viewpoint, it is desirable that different types of wastes be packaged separately to minimize the probability of producing compounds which might interact with the container material. For example, the iodine-laden silver zeolite, together with the tritiated water-laden molecular sieve or any other moisture-containing material, would produce HI, which is highly corrosive toward common container materials (e.g., stainless steels).

Incorporation in cement with additives. Although the incorporation of non-high-livel radioactive wastes in cement has been practiced for a

number of years, the formulation of a satisfactory mixture for a specific type of waste still requires a certain degree of experimentation. In the present case, mixing with cement alone will not be an effective means of immobilization since the cured solids will still have an open-cell structure which permits radionuclides to be leached out by water.

Improved leach resistance over that of the plain cement-waste mixture can probably be obtained by adding certain mineral materials (e.g., fly ash, drilling clay, and grundite) to formulate cemetitious grouts. This type of mixture has been utilized in the isolation of non-high-level liquid wastes by the hydrofracture method.[28] The main function of these additives is to improve retention of key radionuclides (i.e., special fly ash to retain strontium, and grundite to retain cesium); in addition, they lower the volume expansion factor (e.g., ~30% volume increase over the original waste as compared with ~100% with conventional cement-waste mixtures). The leach rates of fission products from the cured products were reported to compare favorably with those from borosilicate glasses.[29,30]

Polymer-Impregnated Concrete (PIC). This alternative consists of soaking the cured concrete-waste mixture with synthetic monomer such as styrene, followed by heating to 50-70°C to polymerize the monomer-impregnated concrete-waste in situ.[31,32] The polymer effectively seals the pores, and the resulting product (PIC) is practically impermeable, thus reducing leachabilities of the radionuclides by two orders of magnitude as compared with conventional cement-waste products. The PIC is also characterized by high resistance to chemical attack and high mechanical strength, but starts to decompose at ~250°C even though it is nonflammable.

Sealing with or conversion into glass. The current emphasis in the application of glass technology to waste processing is on vitrification of HLLW. The R&D work specifically directed toward non-high-level wastes is rather limited; nevertheless, the data derived from development work relative to HLLW vitrification should prove useful in the processing of spent catalysts and molecular sieves.

Glass technology could be utilized in the processing of such wastes in two ways. One method of approach is to place the waste material in

the glass matrix (mp ~1200°C), thus sealing the pores. Another method would make use of the components in the waste material (i.e., SiO_2, Al_2O_3, Na_2O, etc.) as part of the ingredients required for formulation of an acceptable vitrified waste (e.g., borosilicate glass type). The latter approach may require an appreciably higher temperature than the former.

3.2.2.4 Assessment of process alternatives

Packaging of the spent catalysts and molecular sieves without additional processing is probably the simplest and most economical alternative for handling such waste. This method is still permitted under the present regulations as a means of preparing for transport to a Federal isolation repository. However, such a practice could be prohibited in the future because of the potential for the radionuclides in the wastes to be dispersed by leaching in case of container failure.

Use of cement or concrete modified with either mineral additives or organic polymers represents a significant step in immobilizing the radionuclides. A polymer-impregnated concrete (PIC) waste mixture appears to have characteristics (e.g., low leachability and high mechanical strength) that are superior to the mineral-modified cement-waste mixture on a near-term basis. However, in spite of these advantages, the long-term performance of the PIC-waste mixture is obscured by uncertainties pertaining to thermal and chemical stabilities of its organic constituents over a prolonged isolation period. The process alternatives based on both types of formulations (i.e., cement-mineral additives and PIC) have fundamentally desirable features in that the associated equipment and procedures are relatively simple, with the process temperature being near ambient (< ~70°C).

Incorporation of the wastes in glass would yield a product with the highest thermal and chemical stability of the four process alternatives considered here. One of the shortcomings with this process is the potential losses of iodine, tritiated water, and semivolatile nuclides from the waste materials at glass-forming temperatures. Therefore, this alternative may not be suitable for processing spent molecular sieves and

zeolites unless the overall scheme and/or conditions could be designed to circumvent its problem. It is possible that certain glass-making formulations might suppress their volatility.

Major advantages and disadvantages of the four process alternatives discussed above are summarized in Table 15.

3.2.2.5 Research and development needs

As outlined in Table 16, the areas requiring major R&D efforts are related to characterization of the as-discharged waste materials and the immobilized wastes from the three process alternatives. Relatively minor work would be needed in most other areas.

The process to incorporate the molecular sieve type of material into cement with mineral additives should be investigated to determine how the leachability and the mechanical strength of the product could be improved sufficiently to be competitive with those from alternatives 3 and 4 (Table 16). Since molecular sieve is basically an aluminosilicate compound, it may have some beneficial effect on the immobilized wastes. Much of the data from the LWR-ILW immobilization program should be useful to both the above study and the study on alternative 3 (PIC).

The bulk of the information from commercial glass technology as well as that expected from the LWR-HLLW vitrification work should be adaptable to the effort on immobilization of wastes. Major emphases must be placed upon development of: (1) methods to retard or eliminate volatilization of radionuclides from the molten glass (e.g., formulation to lower the melting point), (2) a method to utilize the waste material (molecular sieve) as part of the required ingredients for glassmaking, and (3) the off-gas treatment system.

3.2.3 Spent ion exchange resins, filter cakes, evaporator bottoms

3.2.3.1 General and radiochemical characteristics

These streams (wet solids or sludge) are composed of the secondary wastes resulting from the treatment of various non-high-level (i.e., so-called low-level and intermediate-level) liquid wastes (see Table 1 and

Table 15. Comparison between different alternatives for processing of spent catalysts and molecular sieves

Process alternative	Advantages	Disadvantages
Direct packaging	Very simple equipment and operation	In case of container failure, the wastes would be permeable to water and conducive to spread of radionuclides.
Incorporation in cement with additives	(1) Relatively simple processing equipment and operation (2) The product has considerably lower leachability and lower volume expansion than conventional cement-waste mixtures.	(1) The product has lower strength than conventional cement-waste mixture. (2) Leachability is generally higher than glassified wastes.
Polymer-impregnated concrete	(1) Has much lower leachability, higher strength, and higher resistance to chemical attack than conventional cement-wastes (2) Nonflammable, and thermally stable up to ~ 200°C	(1) Long-term stability of organic polymer uncertain (2) Decomposes at > ~ 250°C
Incorporation in glass	(1) Has lower leachability than any of products from above alternatives (2) High resistance to chemical attack, and high thermal stability	(1) Requires high-temperature material for equipment, and high thermal energy consumption (2) Some radionuclides (i.e., I_2, HTO, etc.) would be released at glass processing temperatures. (3) Potential problems in handling molten glass containing radionuclides

Table 16. Identification of R&D needs and available information for spent catalysts and molecular sieves

	Research and development needs[a]	Information from related R&D program[b]
General waste characterization	(1) Quantities, distribution, and characteristics (including leachability) of radionuclides in waste material as discharged (1-c, h; e-h)	(1) None
	(2) Frequencies or rates of discharge of individual wastes (1-c, h; e-h)	(2) HTGR reprocessing off-gas cleanup
Process alternative		
1. Direct packaging	Containers for packaging of individual types of waste (e-c, h)	LWR-ILW (solids) containers (M)
2. Incorporation in cement with additives	(1) Reduction in leachability and product volume, and improvement in strength as influenced by different additives and process conditions (1-c, h; e-h)	(1) LWR-ILW solidification (M)
	(2) Distribution of radionuclides within the finished products (1-c, h; e-h)	(2) None
3. Polymer-impregnated concrete	(1) Engineering-scale process equipment and operation (e-c, h)	(1) LWR-ILW solidification
	(2) Thermal stability, long-term chemical stability, and leachability as affected by polymer-concrete-waste formulations and process conditions (1-c, h; e-h)	(2) Same as (1) (M)
4. Incorporation in glass	(1) Adaptation of glass technology to incorporation of zeolite-type material into glass (equipment, formulation, process scheme, etc.) (1-c; e-c)	(1) LWR-HLLW vitrification and commercial glass technology (M)
	(2) Distribution of radionuclides among glass, gas phase, and equipment surfaces (1-h; e-h)	(2) - (3): None
	(3) Leachability of radionuclides in glass (1-c, h)	
	(4) Off-gas treatment system (1-c; e-c, h)	(4) Same as (1) (M)

[a]Symbols in parentheses represent scopes of the development needs as follows: 1, laboratory scale; e, engineering scale; c, cold (nonradioactive, includes tracer-level radioactivity) work; h, hot (radioactive) work.

[b]Symbols in parentheses indicate the status of available information: NAP, no active R&D program at present; M, Modification of R&D program or type of available information required — some additional development work may be needed.

Fig. 1). The ion exchange resins commonly used are strong-acid cation and strong-base anion resins of styrene-polyvinyl benzene copolymers. Resins of weak-acid and -base types derived from other types of organic polymers are also utilized. The functional groups associated with cation resins may consist of either sulfonic (strong-acid) or carboxylic (weak-acid) radicals with exchangeable H^+ or Na^+ ions. Quaternery ammonium (strong-base) or amine radicals with exchangeable OH^- or Cl^- are the functional groups in anion resins. Most of the radionuclides taken up by the spent ion exchangers are those that were present in the original liquid wastes as ions (e.g., Sr, Cs, I, and certain rare earths and actinides). Some nuclides in large particulate forms are also retained by the ion exchange bed functioning as a filter.

The filter cake presumably consists of filter aid [e.g., diatomaceous silica, "puffed" lava (aluminum alkali silicate), etc.] mixed with radionuclides (e.g., Fe, Co, Zr, Nb, Ru, Rh, and some rare earths and actinides) that form large (>> ~ 1-μ size) solid particles. Evaporator bottoms are expected to contain large amounts of salts (e.g., nitrates, sulfates, and carbonates) contaminated with ionic radionuclides (e.g., Sr^{2+}, Cs^+, I^-) as well as nuclides in solid forms (e.g., Co, Zr, Nb, Ru, Rh, and actinides).

These wastes would probably contain sufficiently high concentrations of actinides to be classified as transuranic wastes. Whether the amounts of fissionable material present in these streams warrant a recovery effort is yet to be determined on individual bases.

3.2.3.2 Process alternatives and evaluations

Since the radionuclides in these wastes are highly leachable and dispersible, the wastes must be incorporated into thermally and chemically stable solids to immobilize the radionuclides. Two process alternatives discussed previously could be utilized in immobilization of all three types of wastes under consideration. They consist of incorporating the waste into either cement with additives or polymer-impregnated concrete. Discussion presented in Sect. 3.2.2.3 and the assessment made in Sect. 3.2.2.4 pertaining to the above two alternatives (for spent catalysts and molecular sieves) are still valid for the present case.

The filter cake and evaporator bottoms could also be immobilized by glassification technology similar to that described in Sect. 3.2.2.4, but they must be first converted to dry solids by calcination. The presence of significant amounts of corrosion products (e.g., iron, cobalt, manganese, and aluminum hydroxides) in either the filter cake or the evaporator bottoms should not present a serious problem since similar types of sludges have been successfully glassified[33] at ~1150°C. Likewise, the silicate compounds in the filter cake (from filter aid) or sodium carbonate and/or nitrate in the evaporator bottoms could presumably serve as part of the ingredients required in glassmaking.[34]

Glassification of these wastes will be considerably more costly then the other two alternatives in terms of the operating costs as well as the capital costs, mainly because the process requires handling of a high-viscosity molten radioactive mass at high temperatures. As in the glassification of other types of solid wastes, losses of volatile and semivolatile radionuclides must be kept to a minimum by the use of suitable process conditions and glassmaking formulation.

The spent ion exchange resins can also be processed as combustible waste, for example, by the incineration technique to be discussed in detail for the miscellaneous combustible wastes (see Sect. 3.2.4). The potential problems associated with incineration of ion exchange resins are: (1) formation of corrosive and polluting gases (e.g., SO_2), (2) formation of salts that are detrimental to the furnace lining, and (3) release of semivolatile radionuclides (e.g., cesium, iodine, and ruthenium).

3.2.3.3 Research and development needs

The characteristics of the spent resins, filter cake, and evaporator bottoms from a HTGR fuel reprocessing plant are not expected to be significantly different from those of the corresponding wastes from an LWR plant. The HTGR wastes will presumably contain larger quantities of thorium isotopes and their decay daughters than the LWR wastes. However, R&D work is needed to more accurately define these HTGR waste streams in terms of quantities and properties (physical, chemical, and radiochemical).

As to the process alternatives discussed previously, the R&D needs for the HTGR case should be practically identical to those for the LWR case. Therefore, the results from the R&D programs being carried out for processing of the spent resins, filter cake, and evaporator bottoms from the LWR reprocessing should be applicable to the corresponding HTGR wastes with little modification.

3.2.4 Miscellaneous solid wastes

3.2.4.1 General and radiochemical characteristics

This category includes: (1) noncombustible wastes, such as HEPA and roughing filters, failed tools and equipment, scrap metals, spent silica gels and molecular sieves, and miscellaneous trash; and (2) combustible wastes, including rags, clothing, paper, wood, plastic and rubber materials, and organic ion exchange resins.

The most important materials of construction contained in the spent HEPA and roughing filters are fiberglass and metals, although some organic materials are also present. They are loaded with fine particles of different sizes, and their radioactivities vary considerably within the range of low to intermediate level, depending upon the original service location. Frequently, these wastes contain sufficient quantities of particulate nuclides of transuranic elements to be classified as transuranic wastes.

Failed tools and process equipment, which consist essentially of metals of different types, are usually decontaminated in place to remove as much of the radionuclides as possible before they are taken out of service. Large pieces of equipment (e.g., columns, tanks, dissolvers, etc.) would have to be disassembled before removal and treatment. Most of the tools and equipment will still have low- to intermediate-level radioactivities, primarily attributable to fission products, after decontamination. The failed process equipment handling streams containing heavy elements are expected to retain appreciable amounts of alpha radioactivity.

Spent molecular sieve from the radon retention unit of the off-gas cleanup system normally contains ^{220}Rn (half-life, 55 sec) and its decay

daughters (longest half-life, 10.6 hr for ^{212}Pb). Therefore, this material shows a rapid decline in radioactivity level after discharge. It may also be slightly contaminated with semivolatile F.P. Spent silica gel from the uranium purification step would be contaminated with mixed F.P. as well as actinides.

Plastic and rubber waste materials are generated mainly by glove-box operations, while rags, clothing, paper, wood, etc., come from different sources. Although these wastes differ greatly with regard to type and degree of radioactive contamination, they presumably contain variable amounts of F.P. and actinides. The latter group of wastes are readily combustible, producing essentially CO_2 and H_2O, and possibly traces of semivolatile nuclides. Burning of the former group of wastes, however, could release harmful gaseous pollutants (e.g., SO_2, Cl_2, HCl, etc.), depending upon the compositions of rubber and plastic materials. These combustion products are detrimental to the materials of construction for the combustion equipment.

In addition to the LLLW and ILLW treatment system, spent ion exchange resins are also discharged from the fuel pool water treatment system. Two of the major radionuclides taken up by the resins are ^{137}Cs and ^{90}Sr. The basic characteristics of these resins would be similar to those from the LLLW-ILLW treatment system.

The total rate of generation of miscellaneous solid wastes plus spent ion exchange resins, filter cake, and evaporator bottoms (sludge) (see Sect. 3.2.3) is estimated to be ~ 70,000 ft^3/year for a reprocessing plant with an annual capacity of 20,000 F.E. The combustible trash (rags, clothing, paper, wood, plastic, rubber, etc.) would probably account for nearly one-half of this volume.

3.2.4.2 Process alternatives, their features and R&D needs

Numerous processes either being practiced or being developed for miscellaneous solid wastes from LWR fuel reprocessing and other nuclear facilities should be directly applicable to the present case. The basic goal common to all the processes is containment with or without volume

reduction. A drastic volume reduction in the primary waste stream could be achieved by burning of the combustible wastes.

Processing of these wastes is generally preceded by a preparation step which may consist of sorting, mechanical disassembly, and/or decontamination. Sorting deals with segregation of the wastes into combustibles and noncombustibles in addition to separation according to radioactivity levels. Separation of the wastes containing recoverable amounts of fissile material (i.e., uranium, plutonium) is also important. Decontamination is mainly concerned with removal of surface layers of radioactive contaminants on failed process equipment and tools. Selection of process alternatives is governed primarily by whether the wastes are combustible or noncombustible. Most of the alternatives have already been discussed elsewhere in this report and/or in other sources of published literature. Consequently, only a brief listing with references is presented in Table 17. Table 17 also summarizes important characteristics of different alternatives, together with the R&D needs.

3.3 High-Level Liquid Wastes

Following the criteria listed in Table 1, covered under this category are:

1. High-level liquid wastes (HLLW), containing primarily the mixture of aqueous raffinate from the first-cycle extraction column (major portion) and the concentrate of raffinate from the second-cycle extraction column (minor portion). These wastes originate from both the Purex and Thorex processes.
2. Thorium nitrate solution, which is an acidic solution of thorium nitrate discharged from the first-cycle partition-scrub column in the Thorex solvent extraction system.

The HLLW is one of the nuclear wastes of major concern because of its intense radioactivity and decay heat associated with the readily dispersible liquid waste. Although the thorium nitrate solution is treated as a waste here, it most likely will be stored for a prolonged period (~ 20 to 30 years) and may be either recycled as a fuel material or processed as waste at that time.

Table 17. Process alternatives for miscellaneous solid radioactive wastes

Process alternative	Process description	Volume reduction[a]	Form of final Product	Leach-ability[b]	Technology status, problems, and development needs[c]	References
		Combustible Solid Wastes				
Direct packaging	No treatment	1	Unchanged	High	(1) Available. (2) Requirement of large storage space.	
Compaction	Mechanical compression of wastes inside of container.	5 to 15	Unchanged	High	(1) Available. (2) Potential spring-back of wastes and airborne contamination.	7,8
Immobilization in solid matrix	Incorporation of shredded wastes into cement or other solid matrix.	≤1; possibly volume increase	Waste dispersed in solid matrix	Low to very low	(1) Available. (2) Requirement of large storage space; little or no volume reduction, possibly volume increase depending upon waste type. (3) Determination of suitable waste-matrix mixtures for different wastes.	28-32
Combustion 1. Incineration processes	Fluidized-bed incineration of wastes in Na_2CO_3 bed (550-600°C).	20 to 40	Refractory oxides	Moderate	(1) Cold pilot plant. (2) Release of semivolatile and particulate radionuclides. (3) Gas effluent control; ash-salt separation.	35
	Cyclone incineration of wastes in vertical combustion chamber (1100°C).	30 to 50	Refractory oxides	Moderate	(1) Cold pilot plant. (2) Disposal of scrubber solution; throughput of U or Pu-containing waste is limited by criticality; corrosion of off-gas system. (3) Process optimization; confirmation with actual radioactive wastes.	
	Dual-chamber two-stage combustion (500-800°C; 800-1100°C)	30 to 50	Refractory oxides	Moderate	(1) Cold pilot plant. (2) and (3): Same as (2) and (3) above.	36
	Incineration in inclined rotating kiln (600-800°C primary chamber; 1000°C after-burner)	30 to 50	Refractory oxides	Moderate	(1) Cold pilot plant. (2) Suitable seals for rotating kiln; possible incomplete combustion and glass formation. (3) Engineering-scale demonstration with actual radioactive waste.	37
2. Pyrolysis	Air-deficient pyrolysis in fixed bed (vertical) (600°C) followed by combustion in secondary chamber (1200°C)	30 to 50	Refractory oxides	Moderate	(1) Cold pilot plant. (2) Potential plugging of pipe lines by tars; off-gas cleanup. (3) Process optimization; confirmation with actual radioactive wastes; off-gas treatment system.	38
3. Molten-salt combustion	Combustion of wastes with air in molten Na_2CO_3-Na_2SO_4 (~800°C)	30 to 50[d] (after ash-salt separation)	Salt-ash mixture	High to Moderate	(1) Cold pilot plant. (2) Relatively high loading of salt particulate in off-gas; molten-salt handling; corrosion; ash-salt separation. (3) Tests with actual radioactive wastes.	39
4. Acid digestion	Digestion of wastes in H_2SO_4-HNO_3 at 230-250°C	30 to 50[d] (After ash-salt separation)	Salt cake-sulfate oxide mixture	High	(1) Cold pilot plant. (2) Release of volatile nuclides (e.g., I_2 and Ru); equipment corrosion by off-gas (e.g., SO_2, SO_3, HCl, etc). (3) Off-gas treatment system; confirmation with actual radioactive wastes.	40
		Noncombustible Solid Wastes				
Direct packaging	No treatment for small equipment; disassembly needed for large equipment.	1	Unchanged	High	(1) Available. (2) Requirement of large storage space.	
Compaction	For small components and equipment: same as combustible wastes. For large equipment: disassembly needed.	≤5	Unchanged	High	(1) Available for small waste components and equipment. (2) Potential airborne contamination; handling of large and heavy pieces of radioactive equipment. (3) Adaptation of large-scale commercial compactor to handling of radioactive equipment.	7,8
Melting	Melting of metallic waste in furnace and cast into ingots	5 to 15	Metal ingot	Low	(1) Small-scale studies on stainless steel. (2) Potential loss of semivolatile nuclides; remote operability; material of construction. (3) Adaptation of commercial metal-scrap melting technology to large-scale radioactive scrap metal.	11-13
Molten-salt reduction	Molten Na_2CO_3-air oxidation of thin-wall metallic components	≤5[d]	Salt-ash mixture	High to moderate	(1) Bench-scale hot test. (2) Molten salt handling; ash-salt separation; relatively high salt particle loading; potential loss of semivolatile nuclides; limited to thin-wall metal and glass; equipment corrosion. (3) Confirmation with engineering-scale equipment using actual wastes; suitable material of construction.	39

[a] Ratio of $\frac{\text{Initial Volume}}{\text{Final Volume}}$

[b] Leachability of radionuclides from unpackaged waste mass.

[c] Item (1): technology status; Item (2): major potential problems; Item (3): major development needs.

[d] Assume clean separation of ash with radionuclides from nonradioactive salts; otherwise a volume increase may occur.

3.3.1 High-level liquid waste (HLLW)

3.3.1.1 General characteristics

The HLLW is an aqueous HNO_3 solution (~2 M as discharged) containing a variety of reprocessing chemicals and corrosion products as well as most (~ 90 to 99%) of the fission products and small amounts of actinides. Among the chemical species other than NO_3^- found in the HLLW are: Na, Ni, Fe, Cr, F^-, PO_4^{3-}, and SO_4^{2-}. Soluble neutron poisons (e.g., B, Cd, Gd) used in dissolution of the fuel may also be found in the HLLW. The chemical of most concern is fluoride because of its corrosive nature toward common materials of construction. This subject is discussed in detail in Sect. 3.3.1.2.

In general, the HLLW from the HTGR fuel reprocessing is similar to that from the LWR fuel reprocessing, with a few exceptions. The HTGR-HLLW (1) contains appreciable amounts of aluminum and fluoride, introduced at the time when thoria was dissolved, and thorium lost to the aqueous raffinate from solvent extraction, (2) contains considerably larger quantities of fission products and process chemicals per MT of heavy metals processed than the LWR-HLLW, and consequently (3) has a large liquid volume per MT of heavy metals. Based on the unit power generated [e.g., per GW(e)], however, the quantities of HTGR-HLLW and LWR-HLLW mentioned in items (2) and (3) would be nearly identical. The approximate rate of generation (as discharged volume) of the HTGR-HLLW is estimated to be ~3300 gal per MT of (U + Th). The amount of solidified HLW would probably range from 4 to 6 ft^3/MT of (U + Th) (estimated from ref. 41).

3.3.1.2 Potential problems associated with fluoride

Fluorides, including HF, are known to be quite corrosive toward commonly used materials of construction, including stainless steel. For example, the Allied Chemical Corporation - Idaho Chemical Processing Plant (ACC-Idaho) has experienced severe corrosion problems with equipment fabricated from stainless steels, in addition to other operational difficulties associated with fluoride during concentration and calcination

of the HLLW from reprocessing of Zr-U alloy fuels. The corrosion problem was alleviated by the addition of Ca^{2+} ions (as the nitrate), which convert fluoride into a relatively stable complex, and by elimination of the concentration step. In this way, the fluoride content in the gaseous effluent from the fluidized-bed waste calciner was reduced to a negligible level. There are indications that $Mg(NO_3)_2$ may function just as well as, or perhaps better than, $Ca(NO_3)_2$.

According to the recent information from European researchers, neither KFA (Germany) nor CEA (France) has encountered any obvious difficulty with fluorides in a number of instances. Pertinent data were calculated from one KFA paper[42] and two CEA papers,[43,44] and then compared with the data from ACC-Idaho and ORNL in Table 18. The results in Table 18 indicate that the fluoride content in the HLLW from the Zr-U fuel is approximately 5 to 100 times greater than that in other types of HLLW. Such a high fluoride content explains the severe equipment corrosion problem experienced at ACC-Idaho in the absence of added $Ca(NO_3)_2$. Some of the HLLW from CEA contains ~ 0.5 wt % magnesium, which may have stabilized the fluoride. ACC-Idaho has indicated that the presence of aluminum also mitigated fluoride corrosion, similar to calcium or magnesium. On the other hand, the effectiveness of the addition agents [e.g., $Ca(NO_3)_2$] diminishes at temperatures greater than 70 to 80°C.

The incomplete information available from the sources mentioned above does not permit any definite conclusion as to whether the presence of fluorides in the HTGR-HLLW would have any detrimental effect. It does, however, indicate that complexing agents can minimize corrosion. Some questions still remain to be answered: (1) the range of the fluoride contents of the effluent streams from the off-gas scrubber for the HLLW calciner and the vitrification equipment in the KFA and CEA studies; (2) potential equipment corrosion problems arising from long-term recycling of the scrubber solution containing fluorides in the KFA and CEA studies; (3) applicability of the data from the Zr-U fuel type of HLLW at ACC-Idaho to the HTGR-HLLW case; and (4) behavior of the stabilized fluoride complexes in the subsequent processing, for example, vitrification. In considering the above questions, additional R&D work is needed to obtain more representative data for the HTGR-HLLW.

Table 18. Approximate chemical compositions of various types of HLLW (selected components)

Source of information	Fuel type	Selected components in HLLW (~ wt %)			
		F	Al	Mg	Ca
ACC-Idaho	Zr-U alloy	4-6	2		5[a]
KFA-Germany	HTR	0.06	0.02		
CEA-France	MTR, U-Al and Pu-Al alloy	0.4	5		
	Graphite--natural uranium	0.8	3-4	0.4-0.5	
CEA-AVM France	MTR, U-Al and Pu-Al alloy	1.2	8		
	Graphite--natural uranium	0.5-0.8	3-4	0.4-0.5	
ORNL[b]	HTGR	0.1	0.3		

[a]From addition agent $Ca(NO_3)_2$.

[b]Calculated values for HTGR.

3.3.1.3 Radiochemical characteristics

In the course of solvent extraction to recover uranium and thorium from the spent fuels, nearly all F.P. and actinides end up in the HLLW. An estimate of the radionuclide contribution to the HLLW includes ~ 90 wt % of F.P., ~ 0.5 wt % of uranium, and ~ 99 wt % of other actinides from the fissile particles, and ~ 99 % of F.P., ~ 0.5 wt % of uranium, ~ 1 wt % of thorium, and ~ 100% of other actinides from the fertile particles. A significant fraction (~ 10 wt %) of F.P. and a very small fraction of actinides are expected to be retained by the SiC hulls.

The distribution of these radionuclides in the HLLW is illustrated in Table 19 (major nuclides only). Table 19 demonstrates that the F.P. account for the major portions (~ 90 to 98%) of the total radioactivity as well as the total decay heat generation irrespective of the cooling time through 8 years. Although the fraction of the total radioactivity contributed by the actinides diminishes with cooling time, the trend is reversed with respect to their contribution to the total rate of decay heat generation. After 5 years of cooling, the total radioactivity is reduced by a factor of ~ 7, and the total heat generation rate is reduced by a factor of ~ 6 (both values are compared with the values at 180 days). Extension of the cooling period to 8 years decreased the radioactivity only slightly, whereas the heat generation rate declined to approximately one-nineth of the rate at 180 days.

Strontium-90, ^{134}Cs, ^{137}Cs, and ^{144}Ce are among the predominant F.P. accounting for ~ 35 to 50% of the total radioactivity and ~ 25 to 40% of the total heat generation rate. The most important radionuclides among the actinides are plutonium isotopes (notably ^{238}Pu), especially after a long cooling time ($\geq$ 5 years); that is, greater than 90% of the actinide radioactivity and ~ 85% of the decay heat attributable to actinides come from the plutonium isotopes.

Table 19. Variation in estimated characteristics of high-level liquid wastes with cooling time[a,b,c]

Major nuclides	Radioactivity (Ci) Time after discharge from reactor 180 days	5 years	8 years	Rate of heat generation (W, β+γ) Time after discharge from reactor 180 days	5 years	8 years
Sr-90	5.29(7)	4.40(7)	4.40(7)	6.68(4)	5.99(4)	5.56(4)
Ru-106	2.25(7)	1.01(6)	1.27(5)	1.33(3)	60	8
Sb-125	3.55(6)	1.12(6)	5.19(5)	1.44(4)	4.55(3)	2.10(3)
Cs-134	1.22(8)	2.67(7)	9.67(6)	1.30(6)	2.83(5)	1.02(5)
Cs-137	5.52(7)	4.98(7)	4.65(7)	9.04(4)	8.14(4)	7.61(4)
Ce-144	3.02(8)	5.47(6)	3.75(5)	2.47(5)	4.48(3)	310
Eu-154	2.44(6)	2.00(6)	1.76(6)	2.00(4)	1.65(4)	1.45(4)
Other F.P.	8.62(8)	1.14(8)	9.53(7)	4.90(6)	5.33(5)	4.52(5)
Th-228	1.00(3)	1.48(3)	1.52(3)	33[d]	48[d]	50[d]
U-232	820	780	760	26[d]	25[d]	24
U-233	210(22 kg)	210(22 kg)	219(22 kg)	6	6	6
U-235	0.0(6.2 kg)	0.0(6.2 kg)	0.0(6.2 kg)	~ 0	~ 0	~ 0
U-236	0.6(9.7 kg)	0.6(9.7 kg)	0.6(9.7 kg)	~ 0	~ 0	~ 0
Pu-238	2.33(6)[138 kg]	2.25(6)[134 kg]	2.20(6)[130 kg]	7.72(4)[d]	7.46(4)[d]	7.29(4)[d]
Other Pu	1.08(6)[79 kg]	8.73(5)[64 kg]	7.46(5)[55 kg]	250[d]	200[d]	190[d]
Other actin.	9.10(7)	2.12(5)	2.00(5)	1.50(5)	1.29(4)	1.20(4)
Total F.P.	1.42(9)	2.00(8)	1.98(8)	6.64(6)	9.83(5)	7.03(5)
Total actin.	9.44(7)	3.34(6)	3.15(6)	2.27(5)	8.78(4)	8.52(4)
Grand total	1.51(9)	2.03(8)	2.01(8)	6.87(6)	1.07(6)	7.88(5)

[a]Quantities shown are based on an assumed annual reprocessing capacity of 7800 23R fuel elements and 11,600 25R fuel elements. The high-level wastes (HLWs) in this table are a mixture of HLWs from the reprocessing of both fissile and fertile particles.

[b]HLW is assumed to contain: (1) all fission products and actinides other than U (in the discharged fuel), except those retained by SiC hulls and/or lost to the off-gas, (2) 0.5% of U not retained by SiC hulls, and (3) 1% of Th in the discharged fuel (fertile particles).

[c]Numbers in parentheses represent powers of 10.

[d]Beta power only.

3.3.1.4 Process alternatives and characteristics of solidified HLW

Since the general characteristics of the HTGR-HLLW are similar to those of the LWR-HLLW, the technical data derived from development of process alternatives for the LWR-HLLW should be applicable to the HTGR-HLLW with only minor modification. As in the LWR case, some types of the non-high-level liquid wastes (so-called ILLW and LLLW) may be combined with the HLLW after preconcentration. The presence of excessive amounts of process chemicals (sodium in particular) in these wastes may cause difficulties in solidification.

The major goal in solidification of the HLLW is to convert it from the dispersible liquid form into a stable solid form, thus reducing the mobility of the highly radioactive F.P. and the long-lived, highly toxic actinides. In addition to the solidification steps, the HLLW processing includes (1) feed pretreatment (e.g., concentration and denitration), (2) packaging (include overpacking) of the solidified HLW, and (3) treatment of the secondary wastes. However, the discussion presented in this report emphasizes the solidification process and the HLW product characteristics. Instead of descriptions of individual processes in detail, highlights of the process alternatives selected from numerous publications on R&D work in progress are summarized in Table 20; HLW product characteristics are also included.

Calcination. The three calcination processes (pot, fluidized-bed, and spray calcination processes) listed in Table 20 have been fully demonstrated through radioactive engineering and/or pilot-plant scales. Results show that they can produce solidified HLW (calcine) which satisfies the present Federal regulations on the HLW form acceptable for storage in a repository. Nevertheless, the high leachability of the calcined HLW makes it undesirable from the viewpoint of long-term safety. Calcined HLW is also characterized by generally low bulk density and thermal conductivity, and requires storage canisters of small diameter to dissipate the decay heat properly. Accordingly, the recent emphasis is to further convert it to glass or ceramic materials having very low leachability as well as improved density and thermal conductivity.

Table 20. Process alternatives for high-level liquid waste (HLLW): features and selected product characteristics

Process alternative	Process features	Product form & wt % waste	Bulk density & thermal conductivity[a]	Leachability	Advantages	Disadvantages	References
			Calcination				
(C1) Pot calcination	In-canister concentration and solidification of HLLW and additives with gradual addition of feed. Heated by furnace and decay heat at ∿900°C.	Porous cake of calcine; ∿90%	(a) 1.2-1.5 (b) 0.35-1	High	(1) Simplicity; (2) high waste concentration; (3) insensitive to waste composition; (4) single canister for processing and disposal.	(1) Limited processing rate; (2) require separate off-gas cleanup line for each canister; (3) product is readily soluble.	45,46
(C2) Fluidized-bed calcination	Atomization of waste into fluidized bed at 500 to 600°C. Heated by in-bed combustion.	Granular-powdery calcine; ∿50%	(a) 2.0-2.4 (b) 0.2-0.3	High	(1) High processing rate; (2) relatively insensitive to waste composition; (3) can burn small amount of waste solvent.	(1) Potential losses of semivolatile and volatile radionuclides (e.g., Ru, I, Cs, etc); (2) require provision for removal of large amount of fines (30 to 50%) from off-gas; (3) product is readily soluble.	47,48
(C3) Spray calcination	Flash drying and calcination of atomized HLLW droplets in calciner barrel at ∿700°C. Externally heated wall.	Fine powder, 2-5 μm ∿30%	(a) 0.5-1.3	High	(1) Relatively insensitive to waste composition; (2) product suitable for pressing, sintering, and melting.	(1) Same as (1) above; (2) fine powder product requires greater effort in off-gas filtration; (3) product is readily soluble and hygroscopic.	49
			Glassification				
(G1) Continuous calcination-vitrification (French)	Continuous calcination of HLLW in rotary kiln followed by vitrification of calcine and added glass frit in metallic melter at ∿1150°C. HLW glass is drained into storage container.	Borosilicate glass; ∿20-30%	(a) 3-3.6	Very low	(1) Relatively insensitive to waste composition; (2) high processing rate; (3) product is quite homogeneous due to two-step calcination and vitrification; (4) high plant DF.	(1) Relatively complex equipment; (2) high electric power consumption.	44
(G2) In-can melting	Batchwise vitrification of HLLW calcine plus glass frit in a melter-storage container heated by furnace and coupled to a calciner. Melting temp. ∿1000 to 1100°C. Container may have internal longitudinal fins.	Borosilicate glass; ∿30%	(a) 3-3.6 (b) 0.9-1.3	Very low	(1) Simplicity; (2) low corrosion rate; (3) eliminates problems of controlled melter draining or of disposal of spent melter.	(1) Limited choice in material of construction for melter-container; (2) as a result, excessive stresses in container wall and cracks in glass could develop due to differences in thermal expansion.	50
(G3) Joule-heated continuous ceramic melter	Continuous vitrification of HLLW-glass frit slurry in refractory-oxide-walled glass melter at ∿1100 to 1200°C. Either HLLW concentrate or calcine may be used. HLW glass is drained into storage container.	Borosilicate glass; ∿30%	(a) 3-3.6 (b) 0.9-1.3	Very low	(1) Efficient heating technique; (2) high production rate; (3) flexibility in HLLW feed and glass composition; (4) low off-gas effluent; (5) long service life.	(1) No remote and radioactive operating experience; (2) refractory sludge buildup; (3) relatively complex equipment required.	51,52
(G4) Rising-level glass (British)	Batchwise filling of liquid HLLW-glass frit, drying, calcination, and vitrification in a melter-storage canister at ∿1000 to 1050°C, heated by zoned furnace. Cylindrical or annular canister.	Borosilicate glass; ∿30%	(a) 3-3.6 (b) 0.9-1.3	Very low	(1) Simplicity, (2) ability to process wide concentration range of HLLW; (3) low corrosion rate; (4) no problems of controlled melter draining or of spent melter disposal.	(1) and (2): Same as process (G2) above; (3) excessive liquid feed rate could cause canister pressurization; (4) more complex equipment required for deentrainment and off-gas cleanup.	53
(G5) Continuous spray-calciner metallic melter (German)	Continuous spray calcination of denitrated HLLW, followed by vitrification of HLLW-glass frit in Inconel melter at ∿1100°C. HLLW glass is drained into storage container.	Borosilicate glass; ∿30%	(a) 3-3.6 (b) 0.9-1.3	Very low	(1) Relatively insensitive to HLLW composition; (2) relatively high processing rate; (3) melter can be reused.	(1) Short operating life (2 to 6 months) of melter due to corrosion; (2) drain tube is susceptible to plugging due to build-up of refractory sludge.	54,55
			Miscellaneous Solidification Process				
(M1) Dispersion-in-metal matrix	Incorporation of solidified HLW (in form of granular calcine, vitrified beads, or pellets) into metal matrices (either cast or sintered). Metals used: for casting-alloys of Al, Zn, Pb, etc.; for sintering-alloys of Fe and Cu.	HLW particles dispersed in metal matrix. Monolithic (cast) or porous (sintered); ∿10 to 20 vol % waste.	(a) about the density of matrix metal (b) 5-35	Moderately low to very low	(1) High thermal conductivity; (2) high thermal and impact resistance (depends upon mp of metal).	(1) Inability to cast HLW with high fine content; (2) inert atmosphere required for melting-casting and sintering to minimize oxidation; (3) potential metal-waste interaction in long-term storage; (4) large volume of resulting waste product.	56,57
(M2) Glass-ceramic formation	Vitrification of HLLW, followed by programmed thermal treatment for controlled nucleation and crystallization to produce stable crystalline material of very fine grain sizes.	Very fine-grained crystalline material in thin cross section (<3cm); ∿20%.	(a) ∿2.4-3.3 (b) ∿0.7-2.2	Very low	(1) Higher mechanical strength than glass; some products have higher thermal conductivity; (2) improved thermal stability against uncontrolled devitrification.	(1) Tedious operational procedure required in thermal treatment; (2) limited R & D data at present; (3) possibly higher losses of volatile and semivolatile nuclides.	58,59 60,61
(M3) Super-calcine formation	Calcination of modified HLLW (additives, e.g., Al, Si, Ca, Sr, etc.), followed by heat treatment at ∿900 to 1100°C to develop an assemblage of thermodynamically stable crystalline species.	Dense and refractory crystalline solids; ∿10-30%.	(a) and (b): About the same as glass	Moderately low to very low	(1) Thermally more stable; (2) more refractory and leach-resistant than ordinary calcine.	(1)-(3): Same as process (M2) above.	62,63

[a]Item (a): bulk density (g/ml); item (b): thermal conductivity (W/m·°C).

Glassification (or Vitrification). Most of the current HLLW solidification R&D programs are concerned with conversion of the HLLW to glass material, chiefly to borosilicate glass. Among the recent emphases in the R&D work are: (1) denitration of the HLLW feed; and (2) the use of lower melting glass formulations (950 to 1150°C), both to minimize losses of volatile and semivolatile radionuclides (e.g., ruthenium and cesium) and to maximize waste loading in the glassified HLW.

The major advantages of the HLW vitrification are: (1) a relatively wide range of flexibility in regard to HLLW and glass compositions, (2) the HLW glass products have higher bulk densities and thermal conductivities than the calcined HLW, and (3) products resist attack by many common chemicals and exhibit very low leachability of radionuclides. Exceptions to (1) are wastes containing such compounds as mercury, halogens (F_2, Cl_2, I_2), and sulfate compounds which are incompatible with the commonly used glass formulations. Susceptibility to breakage due to mechanical or thermal shock is the principal shortcoming of the HLW glass. Breakage would increase the surface area of the HLW glass, which, in turn, will increase the amount of radionuclides released when the glass comes in contact with water. Potential devitrification of the HLW glass under the influence of decay heat would also increase its leachability and dispersibility.

Because of the wide differences in process conditions between calcine formation and glass formation, it is probably more desirable to carry out these two steps separately (i.e., processes G1, G2, and G5, Table 20) than to combine them into one step (i.e., processes G3 and G4). The combined process may tend to form products containing excessive amounts of gas bubbles and unconverted calcine particles. While the continuous process (G1, G3, and G5) is preferable for a large-capacity plant, the HLLW from a reprocessing plant of small capacity may be more conveniently handled by the batch process (e.g., G4).

Miscellaneous solidification processes. Despite the many desirable characteristics of the HLW glass, it is subject to damage resulting from radiation and decay heat. This damage includes fracturing and devitrification, both of which would tend to increase leachability and dispersibility

of the HLW glass. Various processes, some of which are listed in Table 20, have been proposed to circumvent these difficulties. Because the funding levels are lower than those for vitrification processes, the development data from these processes are relatively primitive at present, and not all the potential problems have been identified. Consequently, considerable amounts of time and R&D effort will be required to fully develop the technologies and to characterize the HLW products.

3.3.1.5 Research and development needs

As discussed previously (Sects. 3.3.1.1 and 3.3.1.2), the effects of appreciable amounts of fluoride, aluminum, thorium, and process chemicals on the solidification behavior of the HTGR-HLLW are not clear. In order to utilize R&D data from the LWR program, such effects must be thoroughly investigated for the HTGR-HLLW. Most of the R&D needs summarized in Table 21 will probably be carried out under the LWR-HLLW development program; the outcome of the above investigations will determine whether modifications will be required.

3.3.1.6 Partitioning of HLLW

The bulk (> 85 wt %) of the radionuclides in the HLLW are F.P., with the balance being mostly actinides. Since the half-lives of the F.P. are generally much shorter than those of actinides, the radioactivity of the F.P. would diminish to a negligible level long before that of the actinides. Thus, even for ^{137}Cs ($t_{1/2}$ = 30 years) and ^{90}Sr ($t_{1/2}$ = 28 years), which are among the longest-lived major F.P.s, their radioactivity would be reduced by a factor of 10^9 within 1000 years. On the other hand, the amounts of some of the transuranium isotopes (e.g., ^{239}Pu, ^{242}Pu, etc.) would decrease by only three orders of magnitude after a quarter of a million years. Because of the relatively high ingestion hazard of plutonium and other actinides (e.g., americium), isolation of these nuclides for 100,000 years or so may be required. Also, most of the decay heat originates from the F.P.

These considerations have led to the partitioning concept, whereby the HLLW is divided into two fractions: actinides and F.P. Development work

Table 21. Technology availability and R & D needs for HLLW

Process alternatives	Technology status	R & D needs	R & D timing[a]
		Calcination	
(C1) Pot calcination	Cold and radioactive pilot-plant demonstration completed	(1) Methods for increasing processing capacity without excessive number of parallel lines; (2) determination of operating conditions for varying HLLW waste composition	Short range
(C2) Fluidized bed calcination	Cold and radioactive pilot-plant demonstration completed	Confirmation of (1) pilot-plant data in a large-scale demonstration plant based on simulated LWR-HLLW; (2) capability of proposed off-gas cleanup system; (3) ability to overcome potential safety problems; (4) testing of prototype equipment and remote maintenance mockup; (5) evaluation and selection of methods for stabilization of calcine; (6) development of a practical calcine process	Short range
(C3) Spray calcination	Cold and radioactive engineering-scale tests in progress	(1) Confirmation of technology in large-scale equipment at higher processing rates; (2) methods for improvements of the bulk density and thermal conductivity of calcine	Short range
		Glassification	
(G1) Continuous calcination-vitrification (French)	Continuous cold pilot-plant and discontinuous radioactive pilot-plant demonstration completed	(1) Confirmation of technology in a large-scale radioactive process plant; (2) characterization of radionuclides behavior (especially Ru, Te, Tc, and Mo); (3) methods for denitration of HLLW	Short range
(G2) In-can melting	Radioactive pilot-plant and cold large-scale pilot-plant demonstration completed	(1) Determination of optimum process conditions; (2) confirmation of prototype remote operation capability; (3) final design of melter-storage canister	Short range
(G3) Joule-heated continuous ceramic melter	Cold engineering-scale demonstration in progress	(1) Design for remote operation and confirmation of remote operability; (2) confirmation of reliable long-term operation capability; (3) method and device for fast drain and shut-off of glass feed to storage canister.	Intermediate range
(G4) Rising-level glass (British)	Cold and radioactive pilot-plant demonstration in progress	(1) Methods for increase in processing capacity; (2) improvement in off-gas cleaning and deentrainment; (3) design and testing of large annular canister	Intermediate range
(G5) Continuous spray calciner-metallic melter (German)	Cold pilot-plant and discontinuous HLLW lab-scale demonstration	(1) Improvement in service life of melter and overall processing capacity; (2) confirmation of cold pilot-plant data in large-scale remote operation with radioactive wastes; (3) elimination of calcine deposition problem	Intermediate range
		Miscellaneous Solidification Process	
(M1) Dispersion-in-metal matrix	Cold pilot-plant and lab-scale radioactive demonstration	(1) Determination of methods to prepare metal matrices for different waste forms suitable for remote operation; (2) characteristics of resulting waste-in-metal matrix products	Long range
(M2) Glass-ceramic formation	Limited lab-scale and engineering-scale studies	(1) Determination of suitable product compositions and characterization of product behavior at different processing steps; (2) determination of optimum process conditions; (3) confirmation of technology on engineering scale	Long range
(M3) Super-calcine formation	Limited studies on lab and engineering scale	Same as above	Long range

[a]R & D timing to obtain detailed engineering design data: short range = $\leq$ 1 yr; intermediate range = $\leq$ 5 yrs; long-range = > 5 yrs.

for processes to carry out such a partition for LWR-HLLW is under way at several ERDA facilities, including Argonne National Laboratory (ANL), Battelle Northwest Laboratories (BNWL), Idaho National Engineering Laboratories (INEL, ACC-Idaho), ORNL, and Rocky Flats Plant (RF). However, it will be some time before a practical and economic process can be developed. The current R&D activities at these and other facilities have been summarized in a recent publication.[64] Among the development activities reported in this publication is a cooperative program to establish the technical feasibility and incentives for partitioning.[65] This program represents concerted efforts by various ERDA facilities mentioned above in the waste partitioning studies. There is no R&D program for partitioning of the HTGR-HLLW at present. The characteristics of the HTGR-HLLW are appreciably different from those of the LWR-HLLW insofar as waste partitioning is concerned.[66] Nevertheless, the results from the LWR program may be partially adaptable to the HTGR case.

The nature of the R&D work under the program presented in ref. 65 is outlined below using the ORNL study as an example. The goal of the experimental study at ORNL[67,68] is to develop practical processes for removing actinides and ^{129}I from LWR reprocessing wastes, to the extent that the potential hazard index values of the resulting HLW at a thousand years would be ~ 5% of the value of pitchblende. Achievement of this goal would require that the selected process be capable of performing the separation in order to obtain, for example, DFs of 10^4 for plutonium, 10^3 for americium, curium, and ^{129}I, ~300 for uranium, and 20 for neptunium based on LWR fuel reprocessing. Other combinations are also possible. Achievement of the DFs of such magnitudes could probably be made (at least in concept) by both improved recovery of actinides of fuel reprocessing and further processing of the LWR-HLLW. Preliminary results of the conceptual flowsheet studies have led to the identification of complex problems that must be solved before practical processes can be developed. Among the major problems are: (1) improvement in recovery of plutonium, americium, and curium, and (2) minimization of secondary waste streams by adequate recycling. Laboratory-scale studies

are in progress on potential processes based primarily on modifications of the conventional Purex process. Also in progress at ORNL[69] is evaluation of the partitioning-transmutation method as an HLLW management concept.

3.3.2 Thorium nitrate solution

3.3.2.1 General and radiochemical characteristics

The thorium nitrate solution is an aqueous HNO_3 solution that is ~3 M in free HNO_3 and ~2.3 M in thorium. Residual amounts of F.P. and uranium and other actinides are also present, as illustrated in Table 22. It is estimated that ~50,000 gal of thorium nitrate solution will be generated from a reprocessing plant with an annual capacity of 20,000 F.E.

The major sources of radioactivity and decay heat are attributable to F.P. other than those listed in Table 22, principally ^{95}Zr-^{95}Nb (~80% at 180 days). Important sources of radioactivity among the F.P. listed are: ^{90}Sr, ^{106}Ru, ^{134}Cs, ^{137}Cs, and ^{144}Ce, although the contribution from ^{144}Ce diminishes rapidly with cooling time. Thorium-228 (which is one of the decay daughters of ^{232}U) is, by far, the dominant actinide, accounting for nearly all of the radioactivity and decay heat from actinides.

Initially (180 days cooling), the F.P. represent the chief sources of radioactivity (~97%) and decay heat (~85%). Upon extended cooling, however, their contribution diminishes quickly; that is, after 8 years of cooling, ~57% of the total radioactivity and only ~15% of the total decay heat come from the F.P. Thorium-228 becomes the major heat generator (~80 to 86% of total) after 5 years. Although the total radioactivity decreases by nearly one order of magnitude for the 8-year-old thorium nitrate solution, the total rate of heat generation declines only by a factor of 3. Most of the reduction involved in the decline is attributable to the F.P.

Table 22. Variation in estimated characteristics of thorium nitrate solution with cooling time[a,b,c]

Major nuclides	Radioactivity (Ci) Time after discharge from reactor			Rate of heat generation (W,β+γ) Time after discharge from reactor		
	180 days	5 years	8 years	180 days	5 years	8 years
Sr-90	210	190	175	0.2	∿0.2	∿0.2
Ru-106	8.97(4)	4.02(3)	505	5	0.2	0.0
Sb-125	22	7	3	0.1	0.0	0.0
Cs-134	375	80	30	4	0.9	0.3
Cs-137	220	200	185	0.4	0.4	0.3
Ce-144	1.71(3)	30	2	1	0.0	0.0
Eu-154	7	6	5	0.1	∿0.1	∿0.1
Other F.P.	2.10(6)	1.94(5)	1.57(5)	1.05(4)	795	645
Th-228	5.80(4)	1.12(5)	1.18(5)	1.90(3)[d]	3.62(3)[d]	3.80(3)[d]
Other Th	120 (155MT Th-232)	135	150	3[d]	4[d]	4[d]
U-232	130	125	120	4[d]	∿4[d]	∿4[d]
U-233	40	40	40	1	1	1
Other actinides	95	0.0	0.0	1	0.0	0.0
Total F.P.	2.19(6)	1.98(5)	1.58(5)	1.05(4)	797	646
Total actinides	5.84(4)	1.12(5)	1.18(5)	1.91(3)	3.63(3)	3.81(3)
Grand total	2.25(6)	3.11(5)	2.76(5)	1.24(4)	4.43(3)	4.46(3)

[a]Quantities listed are based on an annual reprocessing capacity of 20,000 F.E. (11,600 25R, 7800 23R, and 600 25W).

[b]The recovery of thorium nitrate solution was made by the Acid Thorex Process based on the following assumptions: (1) the thorium recovery efficiency is 99%, and (2) the DFs are 10^5 for fission products (except DF = 100 for Zr-Nb and Ru-Rh), 10^6 for actinides excluding U, and 10^3 for U. DF here is defined as: DF = (amount of nuclide in fuel)/(amount of nuclide in thorium nitrate solution).

[c]Numbers in parentheses represent powers of 10.

[d]Beta power only.

3.3.2.2 Process alternatives

Selection of suitable process alternatives for the thorium nitrate solution will depend upon the ultimate decision as to whether the solution should be recycled as a fuel material or disposed of as a waste. If recycling is done, the solution should be further purified by additional solvent extraction cycles to remove the bulk of the residual F.P. Removal of ^{232}U (precursor of ^{228}Th), along with other uranium isotopes, may also be necessary. If the thorium nitrate solution should be processed as a waste, it can presumably be combined with the HLLW and be solidified by the process selected for the HLLW.

3.4. Non-High-Level Liquid Wastes

3.4.1 General characteristics

This category includes numerous types of liquid wastes that are commonly termed low level and intermediate level (LLLW and ILLW), covering a broad range of chemical and physical properties as well as radioactivity levels. The major non-high-level liquid wastes from the HTGR fuel reprocessing plant include (see Table 1): (1) steam-stripper overhead, (2) carbonate wash solution, (3) decontamination solution, (4) tritiated water, (5) evaporator condensate, and (6) kerosene scrub. The only combustible waste is the kerosene scrub containing degraded TBP and radionuclides. Various other miscellaneous liquid wastes are also generated at different sources in the reprocessing plant, but they vary considerably in types and properties, depending upon the specific details of the reprocessing flowsheets.

3.4.2 Process alternatives

The common goals in the processing of different non-high-level wastes are: (1) to separate radionuclides and other harmful constituents, in a concentrated form, from the clean portion of the waste material; and (2) to recycle and reuse the decontaminated effluent as much as possible. Since the ILLW and LLLW from the HTGR fuel reprocessing should not be very different from the corresponding LWR liquid wastes, most of the R&D results from the LWR case would be directly applicable.

The ILLW having chemical and physical properties compatible with the HLLW may be combined with the HLLW after concentration. The carbonate wash solution, for example, contains a large amount of Na^+ (~1 M as discharged; much higher after concentration) and may not be a suitable feed for some of the HLLW calcination processes. Nevertheless, since sodium is one of the important ingredients in the borosilicate glass formulations, it should not present any problem in the HLLW vitrification process. Some addition agents (e.g., sulfate, phosphate, etc.) may be necessary to stabilize the sodium compounds in the calcination step. The presence of appreciable amounts of volatile compounds (e.g., mercury and halogen compounds) in certain types of the ILLW may make them incompatible with the commonly used borosilicate glass formulations.

Table 23 summarizes important information on five selected alternatives for the processing of ILLW and LLLW. Sufficient experience has already been gained in the use of these processes in the treatment of radioactive wastes. Since the technologies for these processes already exist, little or no development effort will be needed for immediate application.

It should be noted that the final products from individual processes listed in Table 23 become the secondary wastes that require further processing. For example, the filter cake, spent ion exchange resins, evaporator bottoms, and ash from the incinerator would have to be treated further by processes selected from the alternatives discussed in Sect. 3.2.3.2. The clarified liquor from either filtration or centrifugation and the steam condensate from evaporation may also have to be treated by some other process (e.g., ion exchange) if they should contain radionuclides near or above the limits set by the Federal regulations.

None of the alternatives in Table 23 is applicable to tritiated water. Nevertheless, tritiated water may be incorporated into cement with additives or PIC (Table 15).

Table 23. Process Alternatives for Non-High-Level Liquid Wastes

Process alternative	Process features	Type of waste to be processed	Final product forms	Technology status, problems and development needs[a]	References
Filtration or centrifugation	Removal of coarse solids, suspended particles, and colloidal particles by means of porous media, under the influence of either pressure (filtration) or centrifugal force (centrifugation)	ILLW and LLLW containing appreciable amounts of solids. Centrifugation is more suitable for colloidal particles	Wet solids and clarified liquor (may still contain ionic radionuclides)	(1) Available, (2) may require filter aids or chemical addition to promote separation	70,71
Ion exchange	Removal of ionic radionuclides from liquid waste by a reversible stoichiometric interchange of ions with resins or ion exchangers containing exchangeable ions of the same charge	ILLW and LLLW containing ionic radionuclides with little or no suspended solids (e.g., clarified liquor from filtration)	Wet ion-exchanger particles loaded with radionuclides and decontaminated liquor	(1) Available, (2) may require pretreatment (e.g., flocculation, filtration) to remove excessive amounts of solids, (3) determination of design parameters for specific radionuclides and resin types	72,73
Evaporation	Concentration of non-volatile radionuclides by vaporization and removal of water vapor	ILLW and LLLW containing large amounts of salts and other solids, heavily contaminated with radionuclides	Concentrated liquor or slurry and overhead steam condensate.(may still contain ionic radionuclides)	(1) Available, (2) deentrainment of mist or aerosol, foaming, etc. (3) acquisition of design parameters for specific waste types	74,75
Incineration	Burning of waste liquid organics, and retention of volatilized radionuclides and harmful chemicals by an off-gas cleanup system	Combustible organic wastes (e.g., kerosene scrub, degraded solvent)	Ash containing non-volatile radionuclides and decontaminated gaseous effluent	(1) Available, (2) formation of incomplete combustion products; potential corrosion and erosion problems of incinerator nozzles	76,77

[a]Item (1): technology status; Item (2): major potential problems; Item (3): major development needs.

3.5. Gaseous Wastes

The secondary gaseous waste streams discharged from the off-gas clean-up system include the noble gases and the CO_2 gas stream containing ^{14}C. Krypton-85 is the only radioactive noble gas of concern because of its long half-life (10.7 years). Both ^{85}Kr and $^{14}CO_2$-containing CO_2 gas are discharged separately from the krypton removal unit of the off-gas cleanup system in which krypton is removed (from the head-end off-gas stream) and concentrated by the KALC (Krypton Absorption in Liquid CO_2) process.[78,79] A similar process (AKUT) is being developed in Germany for separation and concentration of krypton.[80] Further concentration of krypton may be accomplished by selective removal of CO_2 in the krypton product stream by means of molecular sieves.[81] Under the current Federal regulations, both ^{85}Kr and $^{14}CO_2$ may be released to the atmosphere from a tall stack under favorable meteorological conditions to comply with the regulatory limits. In view of the potential hazard resulting from long-term global buildup, future regulations would probably require that these two radioactive gaseous effluents be immobilized and isolated from the biosphere.

3.5.1 Krypton gas

3.5.1.1 General and radiochemical characteristics

The krypton concentrate discharged from the KALC unit contains ~6% ^{85}Kr plus significant amounts of CO_2 and xenon. For a reprocessing plant with an annual capacity of 20,000 F.E., the rate of production of krypton gas is estimated at ~460 kg or 123,000 liters (0°C, 1 atm), containing ~11 MCi of ^{85}Kr. The major radioactivity of ^{85}Kr comes from its beta energy of 0.65 MeV.

3.5.1.2 Assessment of process alternatives and R&D needs

The simplest alternative would be atmospheric dispersal of the diluted krypton gas stream containing ^{85}Kr through a tall stack when meteorological conditions are favorable. Estimation of airborne ^{85}Kr concentrations under various meteorological conditions based on published methods[82-84] have

indicated that the dose rates resulting from such a release are generally much lower than the present regulatory limits. This situation, however, may change in the near future as the nuclear power industry continues to grow. Acquisition of more accurate meteorological data for the specific fuel reprocessing site is needed to make a more reliable estimate of the dose rate.

The only other available technology at present for controlling ^{85}Kr is to confine it in pressurized cylinders (e.g., 50-liter size), which are then placed in a contained storage facility to permit ^{85}Kr to decay. For example, krypton gas may be confined in a 50-liter cylinder at ~500 psig without exceeding ~60°C wall temperature[85] in a well-designed storage facility. Nevertheless, R&D work is needed to evaluate the effects of impurities in the krypton product (e.g., ^{85}Rb, decay product of ^{85}Kr; CO_2; etc.) on the long-term storage of the product in pressurized cylinders. These effects include the potential hazard that could result from corrosion of the cylinder material by the impurities and from unstable species formed by radiolysis of impurities. An R&D program to investigate the effect of Rb is under way at ACC-Idaho for the ^{85}Kr gas from LWR fuel reprocessing.[86] Also in progress is a feasibility study[86] on storage of ^{85}Kr by means of encapsulation in zeolites under high temperatures and pressures (~450°C, 1000 atm).

3.5.2 Carbon-14 in CO_2 gas

3.5.2.1 General and radiochemical characteristics

Approximately 0.2 ppm (by weight) of $^{14}CO_2$ is present in the CO_2 gas generated in the burning steps of the fuel elements (assume ~30 ppm of N_2 is present in the original fuel elements). This CO_2 gas stream may also contain a residual amount (<1%) of ^{85}Kr. Carbon-14 is a neutron-activation product resulting from interactions between neutrons and trace impurities including nitrogen, ^{13}C, and $^{17}O_2$. Nitrogen is the major source (>80%), followed by ^{13}C and $^{17}O_2$ in that order. The radioactivity associated with ^{14}C from a 20,000-F.E./year reprocessing plant is estimated at ~4000 Ci (or ~200 Ci/GW(e)Y).[87]

Carbon-14 is of major concern from the environmental aspect not only because of its long half-life (5370 years), but also because of its ability to become incorporated into the food chain. However, until recent years little attention was given to the significance of production of ^{14}C in the nuclear power reactors in general. Since a large amount of graphite is contained in the HTGR fuel elements, the rate of ^{14}C production is expected to be much higher (by about one order of magnitude) than for the LWR fuels. A recently published paper[88] presented an estimate of the distribution of ^{14}C within an HTGR fuel reprocessing plant and gave an evaluation of the environmental effect of ^{14}C released from the plant.

3.5.2.2 Assessment of process alternatives and R&D needs

As in the case of ^{85}Kr, the simplest approach would be to release the ^{14}C-containing CO_2 gas to the atmosphere from a tall stack. This method has been practiced by the LWR and fuel reprocessing plants. It has been suggested[88] that nocturnal release of $^{14}CO_2$ to the environment, when plant assimilation of carbon is at a minimum, might alleviate the potential local dose-rate problem. Such an approach, however, does not solve the problem of the long-term global buildup of ^{14}C.

An alternative to atmospheric dispersal is to convert $^{14}CO_2$ to a solid form. One technology immediately available for this purpose with a minimum of development work is the process of producing $CaCO_3$ by direct reaction between CO_2 and slaked lime. Although this process has been in use commercially for some time (e.g., to manufacture pigment-grade $CaCO_3$ or to sweeten gases), the basic design data are not readily available. Recent results of a scoping study[89] indicate that the direct CO_2-lime reaction is technically and economically more attractive than such methods as the double-alkali process. The study also concluded that shallow-land burial of packaged, concreted $CaCO_3$ will probably be acceptable by the regulatory authority in the future. An experimental investigation of the direct CO_2-lime process, using nonradioactive reactants to obtain the engineering design data, is also in progress at ORNL.[90] Further R&D efforts are needed to determine how this technology can be adapted to

the handling of the radioactive CO_2 gas stream containing ^{14}C and possibly a residual amount of ^{85}Kr.

4. SUMMARY AND CONCLUSIONS

1. Numerous process alternatives have been evaluated, and the R&D needs have been identified for various types of wastes generated in the reprocessing of HTGR fuels. The highlights of these alternatives are summarized in Table 24. The goal common to processing of all the wastes is to convert them into concentrated and immobilized forms that can ensure long-term safety.

2. Practically all solid wastes from the head-end system are high-level, and unique to HTGR fuel reprocessing. They include: (1) sintered-metal filters and cold traps, (2) SiC hulls and insolubles, and (3) retired fissile particles and clinkers. Because of their uniqueness, major R&D efforts are required to characterize them and to develop suitable alternatives for their processing.

3. Other types of wastes unique to the HTGR are: (1) spent reflector blocks, (2) spent molecular sieves and catalysts, and (3) the CO_2 gas stream containing ^{14}C, for which some useful waste processing data are available. Nevertheless, full characterization of these wastes requires a major effort. Likewise, further studies are needed to develop satisfactory waste processing technology.

4. Most other wastes, including the HLLW, are similar to the corresponding LWR wastes and can utilize technologies that are being developed for the processing of the LWR wastes. For the HTGR-HLLW, however, the effects of fluoride, aluminum, thorium, and other process chemicals on the solidification behavior must be fully investigated before the LWR-HLLW data can be utilized.

5. Radioactivities and rates of heat generation of the high-level solid and liquid wastes vary considerably with cooling time. Such variations influence the design of the interim waste storage facility as well as the

Table 24. Highlights of alternatives for processing of major HTGR fuel reprocessing wastes

Type of waste[a]	Radioactivity level[b]	Process alternatives[c]	Availability of R & D data[d]	Extent of modification required[e]	Details in Tables[f]
Sintered-metal filters and cold traps (H) [Contaminated with semi-volatile and particulate nuclides]	High (solid)	(1) Compaction (2) Melt-casting (3) Leaching* (4) Waste dissolution	(1) LWR cladding hulls (NAP) (2) LWR metal scraps (3) None (4) LWR metal scraps and cladding hulls	(1) Minor (2) Minor (3) Complete (4) Moderate	3 and 4
SiC hulls and insolubles (H)	High (solid)	(1) Direct packaging (2) Immobilization in matrix material (3) Chemical separation*	(1) LWR cladding hulls (2) Commercial glass tech.; LWR-HLLW vitrification (3) Chemical data for SiC; LWR-TRU recovery	(1) Minor (2) Moderate (3) Major	8 and 9
Retired fissile particles and clinkers (H)	High (solid)	(1) Direct packaging (2) Immobilization in matrix material (3) Chemical processing*	(1) LWR cladding hulls (2) Commercial glass tech.; LWR-HLLW vitrification (3) HTGR fuel reprocessing	(1) Minor (2) Moderate (3) None	11 and 12
Spent reflector blocks (M)	Intermediate (solid)	(1) Shallow-land burial (2) Crush-burn (3) Crush-burn and ^{14}C fixation*	(1) Nuclide migration in soils (OWI program) (2) HTGR fuel head-end (3) HTGR fuel head-end; commercial $CaCO_3$ process	(1) Minor (2) None (3) Major (^{14}C fixation only)	13 and 14
Spent molecular sieves and catalysts (O)	Intermediate (solid)	(1) Direct packaging (2) Incorporation in cement with additives* (3) Polymer-impregnated concrete* (4) Incorporation in glass	(1) LWR-ILW solids (2) LWR-ILLW solidification (3) LWR-ILLW solidification (4) LWR-HLLW vitrification	(1) None (2) Minor (3) Minor (4) Minor	15 and 16
Filter cakes, ion-exchange resins, and evaporator bottoms (W)	Intermediate and/or TRU (wet solid)	(1) Incorporation in cement with additives* (2) Polymer-impregnated concrete* (3) Incorporation in glass	(1)-(3): LWR non-high-level wastes	(1)-(3): None	Sect. 3.2.3 under waste processing alternatives
Miscellaneous solid wastes-combustible (M)	Intermediate, low and/or TRU (solid)	(1) Direct packaging (2) Compaction (3) Immobilization in solid matrix (4) Combustion* (incineration; pyrolysis; molten salt; acid digestion)	(1)-(4): LWR non-high-level combustible wastes	(1)-(4): None	17
Miscellaneous solid wastes-noncombustible (M)	Intermediate, low and/or TRU (solid)	(1) Direct packaging (2) Compaction* (3) Melt-casting (4) Molten salt reduction	(1)-(4): LWR non-high-level noncombustible wastes	(1)-(4): None	17
High-level liquid waste, thorium nitrate solution (S)	High (liquid)	(1) Calcination (pot, fluidized bed, spray) (2) Glassification* (continuous calcination-vitrification; in-can; continuous ceramic melter; rising-level; continuous spray calcination-vitrification) (3) Miscellaneous (dispersion-in-metal; glass-ceramic; super calcine)	(1)-(3): LWR-HLLW solidification	(1)-(3): Moderate	20 and 21
Non-high-level liquid wastes (S,M,W)	Intermediate and low (liquid)	(1) Filtration or centrifugation (2) Ion exchange (3) Evaporation (4) Incineration (organic liquid only)	(1)-(4): LWR non-high-level liquid wastes	(1)-(4): None	23

[a]The letter in parentheses refers to the source of waste (i.e., H: head-end system; S: solvent extraction; O: off-gas cleanup system; M: miscellaneous; W: secondary waste from interim processing).

[b]See Table 1 for quantitative radioactivity level.

[c]Process alternatives with * are preferred based on available information at present.

[d]Related R & D program from which partial or complete information is available.

[e]Complete: completely new R & D are needed because no data are available.
Major : little useful information is available.
Moderate: nearly half of needed data is available.
Minor : major portion of needed data is available.
None : the available data are directly applicable.
In all cases, characterization of individual wastes is required; the extent of R & D efforts varies with different wastes.

[f]Detailed information on various process alternatives can be found in these tables and in corresponding discussion in the text.

design of the processing facility, chiefly in terms of required capacity, radiation shielding, and method and rate of heat dissipation. The variation in radioactivity and heat generation rate with cooling time is illustrated in Table 25 for four selected high-level wastes.

5. ACKNOWLEDGMENTS

The author wishes to express his appreciation to the following ORNL staff members for comments and suggestions: A. G. Croff, W. Davis, Jr., R. W. Glass, K. J. Notz, and J. W. Snider.

Table 25. Variation in characteristics of selected waste streams with cooling time

Waste stream	Approximate quantity[b]	Nuclide types	Specific radioactivity (Ci per unit quantity)[a]			Rate of heat generation (W per unit quantity)[a]		
			Time after discharge from reactor			Time after discharge from reactor		
			180 days	5 years	8 years	180 days	5 years	8 years
Retired fissile particles (25W)	4 MT (100 ft^3)	Fission products	6.23(5)/ft^3	1.25(5)/ft^3	9.84(4)/ft^3	3.04(3)/ft^3	520/ft^3	350/ft^3
		Actinides	2.92(4)/ft^3	2.49(4)/ft^3	2.34(4)/ft^3	660/ft^3	570/ft^3	555/ft^3
		Total	6.52(5)/ft^3	1.50(5)/ft^3	1.22(5)/ft^3	3.70(3)/ft^3	1.09(3)/ft^3	905/ft^3
SiC hulls	20 MT (430 ft^3)	Fission products	1.62(5)/ft^3	3.82(4)/ft^3	3.06(4)/ft^3	790/ft^3	160/ft^3	110/ft^3
		Actinides	9.8/ft^3	8.7/ft^3	8.2/ft^3	∿0	∿0	∿0
		Total	1.62(5)/ft^3	3.82(4)/ft^3	3.06(4)/ft^3	790/ft^3	160/ft^3	110/ft^3
HLLW	$2x10^5$ gal	Fission products	7.12(3)/gal	1.00(3)/gal	990/gal	33/gal	4.9/gal	3.5/gal
		Actinides	470/gal	17/gal	16/gal	1/gal	0.4/gal	0.4/gal
		Total	7.59(3)/gal	1.02(3)/gal	1.01(3)/gal	34/gal	5.3/gal	3.9/gal
Thorium nitrate solution[c]	$5x10^4$ gal	Fission products	44/gal	4/gal	3.2/gal	0.2/gal	0.0/gal	0.0/gal
		Actinides	1/gal	2.2/gal	2.4/gal	0.0/gal	0.1/gal	0.1/gal
		Total	45/gal	6.2/gal	5.6/gal	0.2/gal	0.0/gal	0.1/gal

[a]Numbers in parentheses represent powers of 10.

[b]For HTGR fuel reprocessing plant of 20,000 F.E./yr (equivalent to ∿20 GW(e)-year).

[c]Unconcentrated.

6. REFERENCES

1. K. H. Lin, Characteristics of Radioactive Waste Streams Generated in HTGR Fuel Reprocessing, ORNL/TM-5096 (January 1976).

2. D. T. Pence, HTGR Reprocessing Wastes and Development Needs, GA-A13919 (April 1976).

3. U.S. Atomic Energy Commission, Code of Federal Regulations, Title 10, Part 50, Appendix F (January 1, 1976).

4. American Institute of Chemical Engineers, U.S.A. Standard Proposed Definition of Radioactive Waste Categories, USA Standards Institute, (June 7, 1967).

5. I.A.E.A., "Standardization of Radioactive Waste Categories," Tech. Rept. Series No. 101, IAEA, Vienna, November 1967 (1970).

6. K. H. Lin and W. E. Clark, ORNL unpublished data, December 1976.

7. J. Pradel, P. J. Parsons, and E. Malasek, "The Volume Reduction of Low-Activity Solid Wastes," Tech. Rept. Series No. 106, IAEA, Vienna, (1970).

8. D. M. Anderson et al., Compaction of Radioactive Solid Waste, WASH-1167, USAEC (June 1970).

9. N. M. Levitz, B. J. Kullen, and M. J. Steindler, Management of Waste Cladding Hulls, Part I. Pyrophoricity and Compaction, ANL-8139 (February 1975).

10. J. O. Blomeke and J. J. Perona, Storage, Shipment, and Disposal of Spent Fuel Cladding, ORNL/TM-3650 (January 1972).

11. B. Griggs, Feasibility Studies for Decontamination and Densification of Chop-Leach Cladding Residues, BNWL-1820 (July 1974).

12. A. M. Platt (compiler), Nuclear Waste Management and Transportation Quarterly Progress Report, January - March 1976, BNWL-2029 (July 1976).

13. M. J. Steindler et al., Waste Management Programs Quarterly Report, April - June 1975, ANL-75-63 (July 1975).

14. U.S.E.R.D.A., Alternatives for Managing Wastes from Reactors and Post Fission Operations in the LWR Fuel Cycle, Chap. 7, Vol. 2, ERDA-76-43 (May 1976).

15. Ibid., Chap. 11, Vol. 2, ERDA-76-43 (May 1976).

16. C. R. Cooley (compiler), Commercial Alpha Waste Program, Quarterly Progress Rept., April - June 1975, HEDL-TME-75-12 (December 1975).

17. J. H. Pitcher, "Stainless Steels: CPI Workhorses," Chem. Eng. 83(25), 119-124 (Nov. 22, 1976).

18. R. V. Hughson, "High-Nickel Alloys for Corrosion Resistance," Chem. Eng. 83(25), 125-36 (Nov. 22, 1976).

19. R. H. Perry and C. H. Chilton (eds.), Chemical Engineers Handbook, 5th ed., McGraw-Hill, New York, 1973.

20. L. F. Grantham et al., Disposal of Transuranic Solid Wastes Using Atomics International Molten Salt Combustion Process II, AI-ERDA-13169 (March 1976).

21. F. G. Kitts and W. E. Clark, Darex Process: Processing of Stainless Steel-Containing Reactor Fuels with Dilute Aqua Regia, ORNL-2712 (May 1962).

22. H. Kleykamp, Microprobe Study of Fission Product Behavior in High-Burnup HTR Fuels (Translation), KFK-2213, Kernforschungszentrum, Karlsruhe, Germany (September 1975).

23. H. J. de Nordwall, "Current Status of Fission Product Transport," Paper No. 10, O.E.C.D. High Temperature Reactor Project, KFA/Dragon Data Retrieval Programme - Final Status Report Meeting, April 28-29, 1976.

24. H. Nabielek, "Fission Products Retention in HTR Fuel," Paper No. 8, O.E.C.D. High Temperature Reactor Project, KFA/Dragon Data Retrieval Programme - Final Status Report Meeting, April 28-29, 1976.

25. C. L. Fitzgerald, V. C. A. Vaughen, K. J. Notz, and R. S. Lowrie, Head-End Processing Studies with Irradiated HTGR-Type Fuels, ORNL-5090 (November 1975).

26. J. W. Faust, Silicon Carbide, Pergamon, New York, 1960.

27. H. W. Wong and L. Abraham, HTGR Spent Reflector Block Disposal Study, GA-A13860 (May 1976).

28. H. O. Weeren, An Evaluation of Waste Disposal by Shale Fracturing, ORNL/TM-5209 (February 1976).

29. J. G. Moore, H. W. Godbee, A. H. Kibbey, and D. S. Joy, Development of Cemetitious Grouts for the Incorporation of Radioactive Wastes, Part 1: Leach Studies, ORNL-4962 (April 1975).

30. J. G. Moore, Ibid., Part 2: Continuation of Cesium and Strontium Leach Studies, ORNL-5142 (September 1976).

31. Brookhaven National Laboratory, Development of Durable Long-Term Radioactive Waste Composite Materials, Progress Reports Nos. 1-10, July 1972 - April 1975.

32. Brookhaven National Laboratory, SRL Long-Term Waste Storage Support Program, Progress Reports Nos. 1-8, July 1973 - January 1975.

33. J. A. Kelley, Evaluation of Glass as a Matrix for Solidification of Savannah River Plant Waste, Radioactive Studies, DP-1397 (October 1975).

34. W. W. Schulz et al., Glass Forms for Immobilization of Hanford Wastes, ARH-SA-210 (April 1975).

35. D. L. Ziegler et al., Pilot Plant Development of a Fluidized Bed Incineration Process, RFP-2271 (October 1974).

36. Los Alamos Scientific Laboratory, Transuranic Waste Management Programs, July 1974 to December 1974, LA-6100-PR (October 1975).

37. D. L. Ziegler, "Incineration Process Fire and Explosion Protection," pp. 911-23 in 13th AEC Air Cleaning Conference, Aug. 12-15, 1974, San Francisco, Calif., CONF-740807 (1974).

38. L. K. Mudge et al., Pyrolysis-Incineration of Simulated Combustible Alpha Wastes, BNWL-1945 (October 1975).

39. L. E. Grantham et al., Disposal of Transuranic Solid Waste Using Atomics International Molten Combustion Process II, AI-ERDA-13169 (March 1976).

40. R. E. Lerch, Acid Digestion of Combustible Wastes: A Status Report, HEDL-TME 75-5 (May 1975).

41. C. W. Kee, A. G. Croff, and J. O. Blomeke, Updated Projection of Radioactive Wastes to be Generated by the U.S. Nuclear Power Industry, ORNL/TM-5427 (December 1976).

42. St. Halaszovich et al., FIPS - A Process for the Solidification of Fission Product Solutions Using a Drum Dryer, IAEA-SM-207/19 (March 1976).

43. R. Bonniaud and C. Sombret, "Statement of Research in the Field of Solidification of High-Level Radioactive Wastes in France," presented at 77th Annual Meeting of American Ceramic Society, Washington, D.C., May 3-8, 1975.

44. R. Bonniaud, C. Sombret, and A. Barbe, "French Industrial Plant 'AVM' for Continuous Vitrification of High-Level Radioactive Wastes," presented at 68th Annual Meeting of American Institute of Chemical Engineers, Los Angeles, Nov. 16-20, 1975. (A summary also appears in Chem. Eng. Prog., pp. 47-48, March 1976.)

45. W. E. Clark et al., Development of Processes for Solidification of High-Level Radioactive Waste: Summary for Pot Calcination and Rising Level Potglass Processes, ORNL/TM-1584 (August 1966).

46. J. C. Suddath, C. W. Hancher, and J. M. Holmes, "Engineering Development of the Pot Processes for Solidification of Radioactive Wastes," pp. 301-24 in Proc. of the Symposium on Solidification and Long-Term Storage of Highly Radioactive Wastes, Feb. 14-18, 1966, Richland, W. H. Regan (ed.), CONF-660208 (November 1966).

47. L. T. Lakey and B. R. Wheeler, "Solidification of High-Level Radioactive Waste at ICPP," presented at OECD-IAEA Symposium on Management of Radioactive Wastes from Fuel Reprocessing, Paris, France, Nov. 27 - Dec. 1, 1972.

48. W. A. Freeby, Fluidized-bed Calcination of Simulated High-Level Commercial Wastes, ICP-1075 (July 1975).

49. W. F. Bonner, H. T. Blair, and L. S. Romero, "Spray Calcination of Nuclear Wastes, BNWL-SA-5764," presented at 78th Annual Meeting of the American Ceramic Society, Cincinnati, Ohio, May 1-6, 1976.

50. H. T. Blair, Vitrification of Nuclear Waste Calcines by In-Can Melting, BNWL-2061 (May 1976).

51. K. Brodersen and I. Larsen, "Inactive Pilot Studies of a Process for Vitrification of Highly Radioactive Waste at the Research Establishment Riso," pp. 197-206 in Proceedings of Symposium on Solidification and Long-Term Storage of Highly Radioactive Wastes, Richland, Wash., February 1966.

52. C. C. Chapman, "Joule Heated Ceramic Melter," Quarterly Progress Report, R&D Activities, Waste Fixation Program, BNWL-1949 (November 1975), pp. 8-12.

53. D. W. Clelland, "High Level Radioactive Waste Management in the United Kingdom," in OECD-IAEA Proceedings of Symposium on Management of Radioactive Waste from Fuel Reprocessing, 1972, Paris (1973).

54. W. Guber, W. Müller, and J. Saidl, "Experiments in Hot Cells," Annual Report, Department of Decontamination Management, KFK-1830 (1971).

55. W. Guber et al., "Pilot-Plant Experience on HLW Solidification and Design of the Engineering Prototype VERA," pp. 489-512 in OECD-IAEA Proceedings of Symposium on Management of Radioactive Wastes from Fuel Reprocessing, 1972, Paris (1973).

56. D. W. Rhodes, Post Calcination Treatment Possibilities for Calcine from Fluidized Bed Calcination, IN-1322 (September 1969).

57. J. N. C. van Geel et al., "Conditioning High-Level Radioactive Wastes," Chem. Eng. Prog. 72(3), 49-51 (1976).

58. A. K. De' et al., "Development of Glass Ceramics for the Incorporation of Fission Products," Ceramic Bulletin 55(5), 500-3 (1976).

59. W. Guber, L. Kahl, and J. Saidl, "Recent Experiments on Fixation of High Activity Wastes in Karlsruhe," presented at 77th Annual Meeting of American Ceramic Society, Washington, D.C., May 3-8, 1975.

60. J. R. Berreth et al., "Post Treatment of High-Level Nuclear Fuel Wastes," presented at 77th Annual Meeting of American Ceramic Society, Washington, D.C., May 3-8, 1975.

61. W. A. Ross, "Sintering of Radioactive Wastes into Glass Matrix," presented at 77th Annual Meeting of American Ceramic Society, Washington, D.C., May 3-8, 1975.

62. G. J. McCarthy and M. T. Davidson, "Ceramic Nuclear Waste Forms: I. Crystal Chemistry and Phase Formation," Ceramic Bulletin 54(9), 782-86 (1975).

63. G. J. McCarthy and M. T. Davidson, "Ceramic Nuclear Waste Forms: II. A Ceramic-Waste Composite Prepared by Hot Pressing," Ceramic Bulletin 55(2), 190-94 (1976).

64. U.S. Nuclear Regulatory Commission (Sponsor), Proceedings of Conference on Management of Radioactive Waste: Waste Partitioning as an Alternative, NR-CONF-001 (June 1976).

65. J. O. Blomeke, "A Program to Establish the Technical Feasibility and Incentives for Partitioning," pp. 38-52 in Proceedings of Conference on Management of Radioactive Waste: Waste Partitioning as an Alternative, NR-CONF-001 (June 1976).

66. H. C. Claiborne, Effect of Actinide Removal on Long-Term Hazard of High-level Waste, ORNL/TM-4724 (January 1975).

67. W. D. Bond and R. E. Leuze, Feasibility Studies of the Partitioning of Commercial HLW Generated in Spent Nuclear Fuel Reprocessing, ORNL-5012 (January 1975).

68. R. E. Leuze and W. D. Bond, "Status of Reprocessing Methods for Actinide Partitioning," pp. 133-51 in Proceedings of Conference on Management of Radioactive Waste: Waste Partitioning as an Alternative, NR-CONF-001 (June 1976).

69. A. G. Croff, D. W. Tedder, J. P. Drago, J. J. Perona, and J. O. Blomeke, A Preliminary Assessment of Partitioning and Transmutation as a Radioactive Waste Management Concept, ORNL/TM-5808 (in preparation).

70. IAEA, "Practices in the Treatment of Low- and Intermediate-Level Radioactive Wastes," in IAEA Symposium Proceedings (1966).

71. E. H. Gischel, "Radioactive Fluid Filtration Systems," presented at ASME Winter Annual Meeting, New York, Nov. 17-22, 1974.

72. K. H. Lin, Use of Ion Exchange for the Treatment of Liquids in Nuclear Power Plants, ORNL-4792 (December 1973).

73. IAEA, "Operation and Control of Ion Exchange Processes for Treatment of Radioactive Wastes," IAEA Technical Report Series 78 (1967).

74. H. W. Godbee, Use of Evaporation for the Treatment of Liquids in the Nuclear Industry, ORNL-4790 (September 1973).

75. IAEA, "Design and Operation of Evaporators for Radioactive Wastes," IAEA Technical Report Series No. 87 (1968).

76. Final Safety Analysis Report, BNFP Separations Facility, Docket 50332-41, Allied-Gulf Nuclear Services, Barnwell, S.C., pp. 4-74 to 4-79 (October 1973).

77. D. W. Tharin, Burning of Radioactive Process Solvent, DP-942 (February 1965).

78. R. W. Glass et al., "Development of the Krypton Absorption in Liquid CO_2 (KALC) Process for HTGR Off-Gas Processing," pp. 232-45 in Proceedings of the 13th AEC Air Cleaning Conference, San Francisco, Aug. 12-15, 1974, CONF-740807 (March 1975).

79. R. W. Glass and R. E. Barker, A Computer Model for the KALC Process Studies in the ORGDP Off-Gas Decontamination Pilot Plant, ORNL/TM-5457 (September 1976).

80. M. Laser et al., "AKUT - A Process for the Separation of Aerosols, Krypton, and Tritium from Burner Off-Gas in HTR-Fuel Reprocessing," pp. 246-61 in the Proceedings of the 13th AEC Air Cleaning Conference, San Francisco, August 12-15, 1974, CONF-740807 (March 1975).

81. C. W. Forsberg, Separation of Radioactive Krypton from CO_2 and O_2 with Molecular Sieves, ORNL/TM-5826 (in preparation).

82. I. Van der Horen, "Atmospheric Transport and Diffusion at Coastal Sites," Nucl. Saf. 8, 490-99 (1967).

83. F. Pasquill, "The Estimation of the Dispersion of Windborne Material," The Meteorol. Mag. 90, 33-49 (1961).

84. C. M. Slansky, H. D. Peterson, and V. G. Johnson, "Nuclear Power Growth Spurs Interest in Fuel Plant Wastes," Environ. Sci. Technol. 3, 446-51 (1969).

85. B. A. Foster and D. T. Pence, An Evaluation of High Pressure Steel Cylinders for Fission Product Noble Gas Storage, ICP-1044 (February 1975).

86. C. L. Bendixen and D. A. Knecht, "Separation and Storage of Krypton," pp. 344-56 in Proceedings of the International Symposium on Management of Wastes from the LWR Fuel Cycle, July 11-16, 1976, Denver, CONF-76-0701 (1976).

87. W. Davis, Jr., et al., Correlation of Radioactive Waste Treatment Costs and the Environmental Impact of Waste Effluents in the Nuclear Fuel Cycle — Repro. of HTGR Fuel Containing ^{233}U and Thorium, ORNL/NUREG/TM-4 (May 1976).

88. J. W. Snider and S. V. Kaye, "Process Behavior and Environmental Assessment of ^{14}C Releases from an HTGR Fuel Reprocessing Facility," pp. 4-1 to 4-3 in Proceedings: Controlling Airborne Effluents from Fuel Cycle Plants, Sun Valley, Idaho, Aug. 5-6, 1976 (1976).

89. A. G. Croff, An Evaluation of Options Relative to the Fixation and Disposal of ^{14}C-Contaminated CO_2 as $CaCO_3$, ORNL/TM-5171 (April 1976).

90. D. W. Holladay, Oak Ridge National Laboratory, personal communication, December 1976.

ORNL/TM-5823
Dist. Category UC-77

INTERNAL DISTRIBUTION

1. J. W. Allen
2. B. J. Baxter
3. G. E. Benedict
4. R. E. Blanco
5. J. O. Blomeke
6. A. L. Boch
7. R. J. Braatz
8. R. A. Bradley
9. R. E. Brooksbank
10. W. D. Burch
11. H. C. Carney
12. W. L. Carter
13. J. H. Coobs
14. A. G. Croff
15. F. L. Culler
16. W. Davis, Jr.
17. F. E. Dearing
18. M. J. Feldman
19. D. E. Ferguson
20. B. C. Finney
21. C. L. Fitzgerald
22. T. M. Gilliam
23. H. W. Godbee
24. R. W. Glass
25. W. S. Groenier
26. P. A. Haas
27. F. E. Harrington
28. C. C. Haws
29. F. J. Homan
30. S. V. Kaye
31-32. P. R. Kasten
33. C. W. Kee
34. R. E. Leuze
35-58. K. H. Lin
59-60. A. L. Lotts
61. R. S. Lowrie
62. A. P. Malinauskas
63. L. E. McNeese
64-65. K. J. Notz
66. A. R. Olsen
67. H. Postma
68. R. H. Rainey
69. R. A. Robinson
70. J. W. Roddy
71. A. D. Ryon
72. J. Schofield
73. C. D. Scott
74. J. H. Shaffer
75. J. J. Shefcik
76. J. W. Snider
77. D. W. Tedder
78. S. M. Tiegs
79. M. L. Tobias
80. D. B. Trauger
81. W. E. Unger
82. V. C. A. Vaughen
83. B. L. Vondra
84-85. R. G. Wymer
86-87. Central Research Library
88. Document Reference Section
89-90. Laboratory Records
91. Laboratory Records (RC)
92. ORNL Patent Section

CONSULTANTS

93. E. L. Gaden, Jr.
94. C. H. Ice
95. R. B. Richards

EXTERNAL DISTRIBUTION

96. Research and Technical Support Division, ERDA, ORO
97. Director, Reactor Division, ERDA, ORO
98-99. Director, Division of Nuclear Fuel Cycle and Production, ERDA, Washington, D.C. 20545
100-101. Director, Division of Reactor Research and Development, ERDA, Washington, D.C. 20545
102-278. Given distribution as shown in TID-4500 under Gas-Cooled Reactor Technology category