DATE ISSUED JUL 19 1977

ORNL/TM-5903

770429

The PuO_2 Dissolution Problem for LWR Plutonium Recycle and LMFBR Fuels: Fabrication and Reprocessing Problems and Their Resolution

E. L. Nicholson, Jr.

[redacted]

OAK RIDGE NATIONAL LABORATORY

OPERATED BY UNION CARBIDE CORPORATION FOR THE ENERGY RESEARCH AND DEVELOPMENT ADMINISTRATION

Printed in the United States of America. Available from
the Energy Research and Development Administration,
Technical Information Center
P. O. Box 62, Oak Ridge, Tennessee 37830
Price: Printed Copy $6.00 ; Microfiche $3.00

This report was prepared as an account of work sponsored by the United States Government. Neither the United States nor the Energy Research and Development Administration/United States Nuclear Regulatory Commission, nor any of their employees, nor any of their contractors, subcontractors, or their employees, makes any warranty, express or implied, or assumes any legal liability or responsibility for the accuracy, completeness or usefulness of any information, apparatus, product or process disclosed, or represents that its use would not infringe privately owned rights.

ORNL/TM-5903
Dist. Category UC-79c

Contract No. W-7405-eng-26

03

ADVANCED FUEL RECYCLE PROGRAM

THE PuO_2 DISSOLUTION PROBLEM FOR LWR PLUTONIUM RECYCLE AND LMFBR FUELS: FABRICATION AND REPROCESSING PROBLEMS AND THEIR RESOLUTION

E. L. Nicholson, Jr. 03
Chemical Technology Division

Date Published: July 1977

NOTICE This document contains information of a preliminary nature. It is subject to revision or correction and therefore does not represent a final report.

OAK RIDGE NATIONAL LABORATORY
Oak Ridge, Tennessee 37830
operated by
UNION CARBIDE CORPORATION
for the
ENERGY RESEARCH AND DEVELOPMENT ADMINISTRATION

ABSTRACT

A survey was made of the information reported to date for laboratory-scale dissolution experiments on PuO_2-UO_2 fuels, of reprocessing plant problems that might be encountered with these fuels, and of the fabrication methods for producing these fuels. The possibility of producing fuels that will be highly soluble in pure nitric acid without resorting to the use of corrosive fluorides for complete dissolution is examined. The report concludes that production of highly soluble fuel is possible, that it is probably economically justifiable, and that fluorides are not necessary for dissolution. Highly soluble fuel would likely have minimal impact on reprocessing criticality and waste disposal problems. Reactor specifications for PuO_2-UO_2 fuels seemingly permit a greater degree of nonhomogeneity than is desirable for achieving high solubility. A fuel solubility criteria is therefore proposed that would limit the amount of insoluble PuO_2 in irradiated fuels to $\leqslant 0.01\%$ of the total amount of plutonium present.

CONTENTS

	Page
ABSTRACT	iii
1. INTRODUCTION	1-1
REFERENCES FOR SECTION 1	1-4
2. SUMMARY AND CONCLUSIONS	2-1
2.1 Review of Fuel Dissolution Information	2-1
2.1.1 LWR plutonium recycle fuels	2-1
2.1.2 LMFBR fuel dissolution data	2-4
2.2 Incentives for Producing Soluble Fuel	2-7
2.3 Review of Fuel Fabrication Information	2-12
2.4 A Suggested Criteria for Acceptable Amounts of Insoluble PuO_2 in Fuel	2-14
3. REVIEW OF FUEL DISSOLUTION INFORMATION	3-1
3.1 LWR Plutonium Recycle Fuels	3-3
3.1.1 Dissolution data	3-3
3.1.2 Fuel pellet homogeneity specifications	3-8
3.2 LMFBR Fuel Dissolution Data	3-10
3.2.1 HEDL data	3-10
3.2.2 ORNL data	3-13
3.2.3 Foreign data	3-17
REFERENCES FOR SECTION 3	3-20
4. INCENTIVES FOR PRODUCING SOLUBLE FUEL	4-1
4.1 Light-Water Reactor (LWR) Fuel Reprocessors' Opinions Concerning the Use of Fluorides in Their Reprocessing Plants	4-1
4.2 Corrosion and Related Problems of Reprocessing Fuel Containing Insoluble PuO_2	4-5
4.2.1 Materials of construction for dissolution systems	4-5
4.2.2 Excessive fluoride consumption by materials other than PuO_2 in the fuel	4-6
4.2.3 Solvent extraction and waste evaporator system corrosion	4-8
4.2.4 High-level waste storage, calcining, and glass-making-systems corrosion	4-8
4.2.5 Failed equipment disposal	4-9
4.3 Nuclear Criticality Problems for Reprocessing Fuels Containing Insoluble PuO_2	4-10
4.4 Additional Head-End Equipment and Effects on High-Level Liquid and Solidified Wastes When Insoluble PuO_2 is Recovered by Fluoride Treatment	4-14
4.5 Effect of Plutonium Losses on the Long-Term Toxicity of High-Level Waste and Leached Cladding	4-22
4.6 Effect of Plutonium Losses on Resource Utilization, Reactor Doubling Time, and Electricity Costs	4-27
REFERENCES FOR SECTION 4	4-32

Page

5. REVIEW OF FUEL FABRICATION INFORMATION 5-1
5.1 Fuel Fabricators' Viewpoint 5-1
5.1.1 LWR PuO_2 recycle fuel 5-2
5.1.2 LMFBR fuel 5-4
5.2 Fuel Fabrication Methods 5-4
5.2.1 LWR PuO_2 recycle fuel 5-4
5.2.2 LMFBR fuel 5-7
5.3 Fuel Fabrication Process Variables and Changes to Achieve Higher Solubility in Pure Nitric Acid 5-9
5.3.1 Fuel pellet sintering 5-11
5.3.2 Mixing PuO_2 and UO_2 powders 5-12
5.3.3 PuO_2 powder 5-14
5.3.4 Coprecipitated fuel 5-16
5.3.5 Thermal codenitration 5-18
5.3.6 Costs for improved pellet sintering to increase fuel solubility 5-20
REFERENCES FOR SECTION 5 5-22

6. A SUGGESTED CRITERIA FOR ACCEPTABLE AMOUNTS OF INSOLUBLE PuO_2 IN FUEL 6-1
6.1 Nuclear Fuel Services Plant Experience 6-2
6.2 Hanford Purex Plant Experience 6-2
6.3 French AT.1 Fast-Reactor Fuel Reprocessing Pilot Plant Experience 6-4
6.4 Leached Cladding Losses 6-4
6.4.1 LWR fuels 6-4
6.4.2 LMFBR fuels 6-6
6.5 Losses to Insoluble Solids in the Dissolver Product 6-8
6.6 Solvent Extraction System Losses 6-10
6.7 Other Losses 6-10
6.8 Summary of Reprocessing Plant Losses and Suggested Criteria for Acceptable Amounts of Insoluble PuO_2 in Fuel 6-11
REFERENCES FOR SECTION 6 6-14

Appendix A — REPROCESSING PLANT FUEL DISSOLUTION SYSTEMS — EXISTING LWR FACILITIES AND CONCEPTUAL SYSTEMS FOR LMFBR AND LWR PLUTONIUM RECYCLE FUELS A-1
A.1 Nuclear Fuel Services, West Valley, New York A-1
A.2 Midwest Fuel Recovery Plant, Morris, Illinois A-3
A.3 Barnwell Nuclear Fuel Plant, Barnwell, South Carolina A-8
A.4 Concepts for Dissolver Systems for Fuel Containing Insoluble PuO_2 . . . . . A-9

Appendix B — TESTS TO DETERMINE THE EFFECTIVENESS OF REMOVAL OF SIMULATED PuO_2 SOLIDS FROM CLADDING B-1

1. INTRODUCTION

Uranium dioxide light-water-reactor (LWR) fuel can be readily dissolved in hot nitric acid, and this fact is the basis for the fuel dissolution procedure used in commercial fuel reprocessing. Plutonium dioxide can be dissolved in a reasonable length of time only with a mixture of hydrofluoric acid and nitric acid; however, this mixture is highly corrosive to the common materials of construction used in reprocessing plants and therefore is disliked by fuel reprocessors. Uriarte and Rainey and many others found that homogeneous solid solutions of $(U,Pu)O_2$ containing up to 35% PuO_2 would readily dissolve in boiling nitric acid without the use of hydrofluoric acid.[1-3] Therefore, the ability to completely dissolve LWR plutonium recycle fuel and liquid-metal fast breeder reactor (LMFBR) fuel in hot nitric acid without resorting to hydrofluoric acid is dependent both on the overall plutonium content of the fuel, which is always less than 35% PuO_2 (even for LMFBR fuel),* and on localized concentrations of plutonium in the pellets. Plutonium-rich particles, which may contain up to 100% PuO_2, have been found in fuel pellets. Fuel solubility depends also on the degree of the solid solution of the PuO_2 in UO_2 that is achieved during fuel pellet fabrication and irradiation.

The problem is that an appreciable fraction of all the fuel samples that have been tested cannot be completely dissolved in pure nitric acid. High PuO_2 content residues remain, which can cause increased nuclear safety problems, can add appreciably to the plutonium content of plant wastes, and can represent a monetary loss if not recovered. The general question to be considered in this report is whether the preparation of soluble fuel is possible, practical, and economic.

The broad effect of the choice of a fuel fabrication method and the detailed effect of varying the fuel fabrication process parameters

---

*Recent information regarding a proposed advanced fuel management plan for the Clinch River Breeder Reactor indicates that the most highly enriched fuel pellets may contain >35% PuO_2. This fuel plan is of considerable concern since these pellets may not be soluble in nitric acid.

and properties of the starting materials have been thoroughly investigated on a laboratory scale for three fuel fabrication processes.[4] These fabrication processes included mechanical blending, coprecipitation, and sol-gel. Mechanical blending and coprecipitation are the only processes used by fuel fabricators and are the only ones considered in detail in this report; of these two, the mechanical blending process is dominant. This process mixes PuO_2 and UO_2 powders prior to pelletizing and sintering. Any large particles of PuO_2 or agglomerates of small PuO_2 particles in the feed stock that are not thoroughly broken up and dispersed by the mixing process will lead to nonhomogeneity, which may not be erased by solid-solution formation and solid-state diffusion effects during pellet sintering and irradiation. This nonhomogeneity can result in a substantial fraction of the plutonium being insoluble when the fuel pellet is dissolved in nitric acid.[5] Mixing fine PuO_2 and UO_2 powders to attain a high degree of homogeneity is difficult in actual practice. The coprecipitation process feeds a thoroughly mixed uranium and plutonium nitrate solution to an ammonia precipitation step where a mixed precipitate of plutonium hydroxide and ammonium diuranate is formed. The slurry is filtered and the precipitate is calcined and reduced with hydrogen to yield a PuO_2-UO_2 powder for pellet production. Extremely homogeneous dispersions of PuO_2 in UO_2 can be obtained. The resulting sintered pellet can be a homogeneous solid solution of PuO_2 in UO_2 and can be readily dissolved in nitric acid. If the precipitation process is not closely controlled, a nonhomogeneous precipitate with high-PuO_2-content particles will form. This formation has, in extreme cases, resulted in coprecipitated fuel pellets that cannot be dissolved completely in nitric acid, even after irradiation.[5] Nonhomogeneous, mechanically blended or coprecipitated PuO_2-UO_2 powders can be converted to a solid solution of PuO_2 in UO_2 in the pellet sintering step by choosing a sintering temperature and sintering time combination that yields the desired results. Very high sintering temperatures and/or long sintering times may have some disadvantages for the fuel fabricator.

Nitric acid–soluble fuel pellets have been produced on a laboratory scale by both processes[4,5] and on a large scale by mechanical blending.[2]

On the other hand, much of the fuel produced on a laboratory scale has been nonhomogeneous and incompletely dissolved by nitric acid, even after irradiation.[5] This is particularly true of fuel produced in the early phases of the development of the mixed-oxide fuel fabrication processes and also for special samples produced for investigations into the effects of fuel fabrication process variables and reactor irradiation conditions on nitric acid solubility. These experiments have led several investigators to conclude that fluorides will be required to completely dissolve all mixed-oxide fuels, especially those for breeder reactor fuel with a high PuO_2 content.[1,5] This conclusion for mixed-oxide fuel assumes no improvements can or will be made in the fuel fabrication processes and that problems caused by insoluble PuO_2* will be accepted by fuel reprocessors. The conclusion will be true if a laissez-faire policy continues.

Decisions are now being made or will be made in the near future regarding fuel fabrication processes that will be used in large-scale plants to be built for manufacturing LWR plutonium recycle fuel and for converting reprocessing plant products to oxides or other forms suitable for shipment to fuel fabricating plants. If these fuel fabrication processes are unchanged from the ones being used today on a small scale, there is no assurance that the resulting fuels will be fully recoverable in present or future reprocessing plants. These problems have been obvious for years to those associated with fuel reprocessing; however, they have been ignored by fuel fabricators who have been concerned only with the most expedient methods of producing reactor specification fuel from readily available materials and have had no incentive to be concerned with fuel solubility. This situation is understandable since plutonium recycle fuel reprocessing is not yet under way on a commercial scale.

---

*The term "insoluble PuO_2" is synonymous with "difficulty soluble PuO_2" and as used herein is interpreted as the undissolved particles of fuel left after dissolution in pure nitric acid. The residue has a higher Pu:U ratio than the original fuel. The residue can be dissolved by prolonged contact with hot, concentrated nitric acid (the time required to accomplish this is exorbitant for high-PuO_2-content residues) or can be dissolved quickly in a hot nitric-hydrofluoric acid mixture.

No fuel solubility criteria exists for mixed-oxide fuels. This report was prepared to point out the need for such a criteria to get manufacturing and reprocessing of such fuels on a compatible basis.

The assistance of R. A. Bradley (ORNL Metals and Ceramics Division) in the early stages of this study is acknowledged.

REFERENCES FOR SECTION 1

1. A. L. Uriarte and R. H. Rainey, *Dissolution of High-Density UO_2, PuO_2, and UO_2-PuO_2 Pellets in Inorganic Acids*, ORNL-3695 (April 1965).
2. J. C. Boudry and P. Miquel, "Adaptation of the Purex Process to the Reprocessing of Fast Reactor Fuels," Paper 253, *Proc. Int. Solv. Extn. Conf., Lyon, France, Sept. 8-14, 1974*, CEA-Conf-2906.
3. N. Parkinson, "Chemistry of the Fast Reactor Fuel Cycle," *J. Brit. Nucl. Energy Soc.* 5: 551-57 (1966).
4. R. E. Lerch, *Dissolution of Unirradiated Mechanically Blended, Sol Gel, and Coprecipitated Mixed Oxide Fuels*, HEDL-TM-72-67 (June 1972).
5. J. H. Goode et al., *The Dissolution of Unirradiated and Irradiated $(U,Pu)O_2$ in Nitric Acid*, ORNL-5015 (February 1975).

2. SUMMARY AND CONCLUSIONS

2.1 Review of Fuel Dissolution Information

Dissolution rate data for solid solution fuel materials shows that PuO_2-UO_2 fuels containing up to at least 28% PuO_2, or possibly somewhat higher PuO_2 contents, can be dissolved in pure nitric acid at acceptable dissolution rates by the same procedures that are used for LWR UO_2 fuels (Table 3.1). Irradiated fuels dissolve faster than unirradiated fuels. Heterogeneous fuels dissolve more rapidly initially than solid solution (homogeneous) fuels, since the UO_2 matrix is selectively dissolved leaving a high-PuO_2-content residue that dissolves very slowly. The residue from a heterogeneous fuel exposed to a typical laboratory-type dissolution test contains 80% PuO_2-20% UO_2. It would require about 700 hr to dissolve a 200-μ*M* particle of this material in 7 *M* HNO_3 and about 6 hr to dissolve it in 7 *M* HNO_3–0.05 *M* HF. If the core of such a particle was pure PuO_2, it would be virtually indestructible in pure nitric acid. The only fully demonstrated, practical, fast dissolvent for high-PuO_2-content materials is a mixture of nitric and hydrofluoric acids.

2.1.1 LWR plutonium recycle fuels

Very little information is available on the dissolution of test samples of LWR plutonium recycle fuels, and no information is available for fuels that were made in small-scale commercial facilities and were actually irradiated in power reactors during the USAEC Plutonium Recycle Program.

Dissolution tests were made on unirradiated mechanically blended LWR plutonium recycle type fuel pellets containing 0.5%, 2%, and 4% PuO_2-UO_2 and on irradiated 0.5% and 2% PuO_2-UO_2 pellets. Some of the fabrication conditions (principally long-sintering times of 6 to 10 hr) were more extreme than customary in small-scale commercial practice and were such that these pellets were converted to solid solutions of PuO_2 in UO_2. They were soluble in a large excess of strong 12 *M* HNO_3 even

before irradiation. The dissolution test conditions were much more severe than those normally used in a reprocessing plant where dissolution is generally done in a few hours with about 6 to 8 *M* HNO_3 with an initial acid to metal mole ratio of about 6. The practicality of using an LWR UO_2 fuel dissolution procedure for LWR PuO_2-UO_2 fuels can be inferred by a laboratory-scale demonstration of the much more difficult procedure of dissolving 28% PuO_2-UO_2 (typical fuel for LMFBRs) in 6.4 *M* HNO_3 to yield a product solution containing 80 g of plutonium per liter, 285 g of uranium per liter, and 3 *M* HNO_3. This product solution is highly satisfactory as a feed for the Purex solvent extraction process. About 70% of the pellets dissolved in 6 hr. Light-water reactor PuO_2 recycle fuels with a much lower PuO_2 content would dissolve much faster. This dissolution procedure, without resorting to the use of fluorides, will be successful only if the PuO_2 in the fuel (LWR plutonium recycle or LMFBR) is a well-diluted solid solution of PuO_2 in UO_2 (Table 3.1).

Fuel-pellet solubility testing in the future should be done using test conditions that are directly related to reprocessing plant dissolution conditions instead of using large excesses of 12 *M* HNO_3 and long exposure times.

Irradiation was shown to improve the solubility of all fuels. The degree of improvement depended on the degree of heterogeneity of the fuel (i.e., highly nonhomogeneous fuels exhibited the most improvement), on the irradiation conditions (high fuel rod power levels were more beneficial), and on the total amount of irradiation. The exact degree of improvement for a given fuel is not easily predictable. This test program was terminated at this time, and LWR PuO_2 recycle fuel pellets prepared using typical small-scale commercial-fuel fabrication conditions were not evaluated.

Mechanically blended 6.6% PuO_2-UO_2 fuel pellets first produced for the Saxton Reactor Plutonium Program were reported to have about 2 to 3% of the plutonium present as an insoluble residue. Process improvements later reduced this residue by a factor of about 10. Coprecipitated fuel made for the same program may have had around a 0.1% insoluble residue.

Unfortunately, the proposal to use dissolution test data as part of the criteria for fuel homogeneity was not accepted by the AEC. Probably no fuels produced for the AEC Plutonium Recycle Program are well documented regarding solubility before irradiation, and apparently none have been tested after irradiation. The dissolution test conditions for the Saxton fuel samples were more severe than those generally used in a reprocessing plant. Irradiation might have reduced the amount of insoluble residue to a very low acceptable level using reprocessing plant dissolution conditions; however, no testing was performed to verify this. The above limited data on LWR PuO_2 recycle fuels and the much more extensive studies on LMFBR fuel pellet samples indicate that the insolubility problem can be minimized by the proper choice of fuel fabrication conditions.

The fuel homogeneity specifications for LWR PuO_2 recycle fuel are based entirely on reactor performance requirements that seemingly allow a much greater degree of inhomogeneity than may be acceptable to the reprocessor. Typical specifications for the USAEC Plutonium Recycle Program fuel pellets required that 95% of the plutonium-rich particles in the pellet be <50 μm in diameter, with none larger than 300 to 500 μm. Examination of some pellets showed that the maximum expected particle size was 205 μm. If 5% of the particles in this fuel were 200 μm in diameter and were insoluble (Table 3.1), and the other 95% of the particles were 50 μm in diameter and were all soluble, about 77% of the plutonium would be insoluble in the unirradiated fuel. This example may be extreme; however, LWR PuO_2 recycle fuels are being produced today with particles containing >40% plutonium in the pellets, therefore, it is not likely that the solubility problem is eliminated. The proposed ASTM specification for pellet homogeneity would permit PuO_2-rich particles up to 200 μm in diameter that could contain up to 100% PuO_2. No limit is placed on the allowable number of large particles. It is claimed that the mechanics of mixing fine powders would require that the majority of the particles be <200 μm. However, irradiation may not cause sufficient solid solution formation and homogenization of these high-PuO_2-content particles to ensure complete dissolution under realistic

reprocessing plant conditions. Fuel fabricators would like to see even looser homogeneity standards to make fuel fabrication easier. There is no published data to prove that fuels just meeting the minimum standards of the proposed ASTM standard will be soluble after irradiation. They will not be completely soluble before irradiation.

Dissolution tests are needed on recent production samples of LWR PuO_2 recycle fuels and on these fuels after irradiation. Pending availability of these irradiated fuels, useful information might be gained by dissolving the spent USAEC Plutonium Recycle Program fuels for which adequate pellet homogeneity and manufacturing methods documentation are still available. Comparison of this documentation and irradiated fuel solubility tests with present fuels should indicate whether the proposed ASTM homogeneity standard is adequate for reprocessing purposes.

2.1.2 LMFBR fuel dissolution data

A considerable amount of data has been accumulated on the solubility of both unirradiated and irradiated LMFBR-type fuel pellets over a period of about ten years. The solubility problem is more difficult to solve for LMFBR fuel than for LWR fuel primarily because it is more difficult to prevent PuO_2 segregation in the high-PuO_2-content fuels made by either coprecipitation or mechanically blending. Extensive tests were made to study the effect of fabrication process variables on dissolution and to determine the effect of irradiation on fuel that was very insoluble before irradiation. In general, fabrication process variables such as fine PuO_2 powder for mechanically blended fuel, better dispersion of the PuO_2 in the UO_2 matrix, higher sintering temperatures, and longer sintering times promote fuel solubility by achieving a more homogeneous and complete solid solution of PuO_2 in UO_2. Irradiation improves the solubility of the fuel, but the degree of improvement is quite variable and depends on the initial degree of heterogeneity in the fuel and irradiation conditions in a not-well-understood or predictable manner. It appears that a conservative assumption would be that irradiation of the fuel to design burnup should reduce the amount of undissolved plutonium by a factor of 10. This possible reduction assumes that

the insoluble PuO_2 particles in the unirradiated fuel are small, say $\leqslant$50 μm in size,* so that irradiation will convert them to solid-solution PuO_2-UO_2.

The irradiated pellet data comes from irradiation test rods made by different organizations using fuel made by several different methods and in small experimental lots so that considerable variation in pellet homogeneity occurred. Consequently, the data are not consistent regarding solubility and has led several observers to conclude that fluorides must be used to dissolve these fuels in reprocessing plants. A significantly high proportion of all samples tested had post-dissolution plutonium losses to the residues of $\leqslant$0.05%. This rather small loss strongly suggests that high solubility without the use of fluorides could be routinely achieved if it were one of the objectives of the fuel fabrication process.

The figure-of-merit criteria for fuel pellet homogeneity for the Fast Flux Test Facility (FFTF) was originally specified to be $\geqslant$0.960 to ensure acceptable fuel performance. This minimum value of reactor performance criteria for fuel is apparently inadequate for a high degree of fuel solubility, since fuel meeting this minimum figure of merit can be expected to have a dissolution test residue of <10% of the plutonium originally in a 25% PuO_2 fuel pellet. Samples of FFTF fuel vendor pellets, which apparently were acceptable to figure-of-merit criteria, had dissolution test residues of 1.7% and 0.8% of the plutonium for mechanically blended and coprecipitated fuels. The residue from the mechanically blended fuel was generally less than 50 μm in diameter, whereas the coprecipitated fuel had very large particles that were between 200 and 500 μm in diameter. This gross inhomogeneity was due to precipitation control problems; fuel irradiation might not erase this 200 to 500 μm particulate inhomogeneity, whereas it might wipe out the <50 μm particles in the mechanically blended fuel. Recent production pellets had dissolution residues amounting to 0.06% and 0.05% of the plutonium for mechanically blended and for coprecipitated fuel. The improved

---

*The maximum size of the PuO_2 particle that will be converted to a soluble solid solution of PuO_2-UO_2 by irradiation is not known.

solubility, if maintained for all FFTF fuel, is a most encouraging trend for reprocessing and indicates that fuel with a high solubility can be produced on a consistent basis. It remains to be demonstrated that all batches of this fuel, both as is and irradiated, have a satisfactory solubility using the milder dissolution conditions typical of a reprocessing plant. As mentioned earlier, the successful dissolution of 28% PuO_2-UO_2 fuel in 6.4 *M* HNO_3 demonstrates that fuel with a high degree of solid-solution formation can be rapidly dissolved in dilute nitric acid; fluoride is not necessary for complete dissolution of high-quality fuel.

Materials other than fluoride have been investigated to see if they could be used to speed up the dissolution of insoluble PuO_2 residues. Tetravalent cerium speeds up the dissolution of plutonium residues; however, the tetravalent cerium is destroyed by a ruthenium catalyzed decomposition. Ruthenium would be present in all irradiated fuel residues. Hydriodic acid is capable of dissolving refractory PuO_2 residues; however, it is corrosive to stainless steel and would have to be isolated from the main part of the reprocessing plant. No materials are known that are capable of promoting rapid dissolution of plutonium residues and also being acceptable for unrestricted general use in a reprocessing plant.

French investigators report of being able to dissolve unirradiated PuO_2-UO_2 fuel containing <35% PuO_2 in >8 *M* HNO_3 in 4 to 6 hr without having to resort to fluorides. They dissolved irradiated fuel (40,000 MWd/metric ton) completely in 1-1/2 hr using 6.4 *M* HNO_3 to get a dissolver product containing 240 g of uranium-plutonium per liter and 3.7 *M* HNO_3. They subsequently confirmed these results with fuel irradiated to 60,000 MWd/metric ton. More than 400 kg of fast-reactor fuel irradiated up to 80,000 MWd/metric ton has been reprocessed successfully without having to use fluorides for dissolution. Many of these fuels were made using enriched uranium; therefore, the improvement in PuO_2 solubility due to irradiation may be less than in a fuel where all the fissioning occurred in the plutonium. French investigators produced this fast-reactor fuel by a fairly conventional mechanical-blending process. Other foreign sources state that solid-solution fuels

containing up to 30% PuO_2 can be dissolved in pure nitric acid. Fuels with a plutonium content this high may dissolve very slowly (Table 3.1). Fuels containing up to about 35% PuO_2, such as those being considered for the CRBR, may be very difficult to dissolve, even if they are intended to be highly homogeneous because of the separation of the fuel into two phases, one having a high PuO_2 content. Development work is needed to investigate the dissolution properties of 35% PuO_2 fuel if reprocessing of this fuel is contemplated. The dissolution of fuel containing $\geqslant$25% PuO_2 appears to be limited to a small number of tests with material that may not be typical of production-type fuel pellets.

2.2 Incentives for Producing Soluble Fuel

The main incentives for producing soluble fuel are to reduce reprocessing and waste-disposal problems and to increase the utilization of uranium resources.

Light-water reactor fuel reprocessors (four American and one British) were contacted regarding LWR mixed-oxide fuel reprocessing. They were all opposed to using fluorides for dissolving fuels, and they further believed that the insoluble PuO_2 problem could be eliminated by relatively minor improvements in the fuel fabrication process. LMFBR fuel reprocessors are likely to have the same opinion. The opinions of fuel reprocessors regarding LWR PuO_2 recycle fuel can be summarized as follows:

1. Fluorides will not be used in their plants to dissolve the fuel because of anticipated corrosion problems.
2. Nitric acid-insoluble PuO_2 will go eventually to the high-level waste system [tests at ORNL indicate that most ($\geqslant$80%) of the insoluble PuO_2 is more likely to remain with the cladding in conventional basket-type dissolvers]. Determination of the amount of insoluble plutonium loss will be very difficult in some plants; however, the amount of loss may still be required for better fissionable material accountability.
3. The possibility of accumulating enough PuO_2 to achieve a critical mass is viewed with concern.

4. Specifications for the acceptance of LWR PuO_2 recycle fuel for reprocessing should require that the fuel be completely or nearly completely soluble in nitric acid before irradiation.

The reasons for the universal aversion to the use of fluorides to dissolve mixed-oxide fuels were examined in detail. Type 304L stainless steel and titanium, the materials of construction most commonly used in reprocessing plants, have unacceptable corrosion rates for routine use with the hydrofluoric acid–nitric acid mixtures required for dissolving PuO_2 fuels that are difficult to put into solution and for subsequent operations where fluoride may be evolved, such as evaporation for nitric acid recovery and high-level waste calcination. Fluoride in the high-level waste (HLW) calcine accelerates corrosion of the HLW glass container during the calcine melting step. Fluoride complexing agents such as Al^{3+} and Zr^{4+} salts are customarily added after the dissolution to inhibit corrosion at ambient temperatures, but are not completely effective in waste evaporation and calcination operations. The use of fluoride complexing agents adds appreciably to the volume of the stored HLW and solids requiring conversion to glass. Special alloys and tantalum are more corrosion resistant to fluoride attack, but are not suited for general application in all places in the reprocessing plant complex where fluoride-accelerated corrosion may occur. Fluorides in the primary dissolvent will dissolve excessive amounts of Zircaloy LWR and the corrosion-sensitized stainless steel LMFBR fuel cladding; therefore, fluorides should only be used to treat the effluent from a primary dissolver to dissolve the residual PuO_2. A special primary dissolver capable of separating the insoluble PuO_2 from the fuel cladding is required because current types of dissolvers apparently do not have this capability. A rotary-drum continuous-countercurrent dissolver is being developed at ORNL to overcome the problem of incomplete leaching of fuel-rod pieces that is encountered in conventional basket-type dissolvers. The rotary dissolver has also shown a capability for separating simulated-insoluble PuO_2 residues from the cladding in small-scale model testing. Thus a new much more complicated, and at present undemonstrated, rotary dissolver is required to separate insoluble PuO_2 from the fuel cladding

and, coincidentally, to remove the maximum amount of insoluble noble metal fission products from the cladding.

The primary dissolver effluent can be treated with fluoride to dissolve the insoluble PuO_2, or the effluent can be centrifuged and only the small volume of collected PuO_2 and fission product solids can be treated with fluorides. The first method, although operationally simple, requires much larger amounts of fluoride that can increase the amount of total solids in the HLW by as much as 175% for an LMFBR fuel that has 2% of its plutonium in a form difficult to put into solution. In any case, if feed clarification is required before solvent extraction, as is likely, the equipment to separate the solids, to wash them free of fissile material, and to discard them is almost identical with that required for the second method for insoluble PuO_2 dissolution. The main difference is that the PuO_2 dissolution system would require fluoride-resistant materials of construction.

The presence of insoluble PuO_2 in the fuel can result in an accumulation of a critical mass of PuO_2 in the plant equipment. Calculations for soluble nuclear-poisioned systems, either in water or in dissolved fuel solution, indicate that about 16 kg of PuO_2 in optimum geometry (a 18-cm-diam sphere) would be critical. This amount of PuO_2 (16 kg) corresponds to 2% of the PuO_2 in eight tons of LMFBR fuel or 2% of the PuO_2 in about 45 tons of LWR PuO_2 recycle fuel. Thus large, say 5 ton/day, reprocessing plants could accumulate considerable amounts of insoluble PuO_2, even if the insoluble PuO_2 content of the fuel was $\leqslant$2% of the total. Geometrically safe equipment design and/or suitable administrative controls would have to be used in the head-end up to the point where the insoluble PuO_2 is dissolved in fluorides. If the insoluble PuO_2 is not dissolved, it would then eventually report to HLW (if a rotary dissolver were used) and would accumulate in the high-level liquid-waste storage tanks. Otherwise 80% or more would remain with the cladding in conventional basket-type dissolvers. The HLW tanks are normally kept well stirred. Failure of the mixing system(s) could possibly result in a local accumulation of PuO_2 solids and thus a criticality incident. It is unknown whether other insoluble solids normally present in HLW would preclude attaining criticality, or whether PuO_2 particles could be

concentrated in sludge mounds by selective sedimentation. The hazard caused by a criticality incident in a shielded, remotely operated facility is not a major problem, nor is equipment damage likely. Any criticality event is likely to disrupt plant operations and therefore must be avoided. Soluble fuel eliminates the criticality potential associated with finely divided PuO_2 solids. Soluble fuel is better from the fissile material accountability standpoint, since representative sampling of plant fluids is essentially impossible if they contain slurries of PuO_2.

The long-term toxicity (say for decay times $\geqslant$1000 years) of HLW and leached cladding is increased by the presence of uranium and plutonium. Any insoluble PuO_2 in the fuel that is not recovered will thus increase the long-term hazard of these wastes over what they would be with only normal process losses. However, americium and curium, which normally report to the HLW, are generally more important long-term hazards in the HLW than is a moderate loss of plutonium (1.5% for LWR plutonium recycle fuel and 0.5% for LMFBR fuel). With conventional dissolvers and solvent extraction system losses of 0.5 to 1% of the plutonium, which is representative of limited commercial U.S. reprocessing experience, the total amount of insoluble PuO_2 in the fuel could be near 2.5% for LWR fuel and 0.5% for LMFBR fuel without infringing on the moderate losses of plutonium to HLW as noted above. However, this conclusion is based on the observation that not more than 20% of the insoluble PuO_2 is likely to be washed away from the cladding in conventional dissolvers. The bulk of the insoluble PuO_2 will therefore remain with the cladding, thus increasing its plutonium content 4- to 20-fold (LMFBR and LWR cases, respectively) over that associated with a 0.1% normal leaching loss to the cladding, which is undesirable. An improved rotary dissolver under development at ORNL appears to be capable of complete leaching of soluble fuel from the cladding and also of washing insoluble PuO_2 from the cladding ($\leqslant$0.001% total plutonium loss). Using the rotary dissolver would reduce the long-term ($\sim$1000 years) toxicity of the cladding to a low value of $\leqslant$0.05% of the toxicity of an equal

volume of pitchblende. The HLW would receive all the insoluble PuO_2, and the fuels could contain no more than 0.5% and 0.1% of the insoluble PuO_2, for LWR and LMFBR fuels, respectively, without infringing on the "acceptable" moderate losses of plutonium as noted above.

Finally, the use of the rotary dissolver and an improved low-loss ($\leqslant$0.05%) solvent extraction system (technically feasible), along with some degree of waste partitioning (say 99% removal of Am-Cm), could reduce the toxicity of the HLW to a value 0.3 of the toxicity of an equal volume of pitchblende. Insoluble PuO_2 losses to HLW would have to be limited to 0.02% and 0.01% for LWR and LMFBR fuels, respectively, so as not to appreciably affect the waste toxicity. The insoluble PuO_2 content of irradiated fuels should not exceed these values, and preferably should be lower, in order to not preclude the possibility of reducing the plutonium content of discarded cladding and solidified HLW to "as low as practicable" values.

Uranium resource utilization in LMFBRs is increased about 1.3% by each 0.1% reduction in total fuel cycle loss of heavy metals (Fig. 4.4). Plutonium is the minor ingredient in LMFBR fuels ($\sim$10% of the total heavy metal in the reactor), therefore resource utilization is relatively insensitive to small avoidable plutonium losses such as might be due to the PuO_2 in the fuel that is difficult to put into solution. Nevertheless, a realistic long-range conservation policy regarding uranium usage for energy production should include reducing avoidable plutonium and uranium fuel cycle losses to "as low as practicable" levels. The doubling time for the LMFBR is decreased by decreasing the fuel cycle losses. For example, the doubling time for an advanced-oxide-core LMFBR with a total fuel cycle time of 4.5 years (1.5 years for reprocessing and refabrication), is reduced from 22 years to 20.3 years (8% improvement) by reducing the total fuel cycle plutonium loss from 2% to 1%. The effect of insoluble PuO_2 losses may be minor; however, again it is apparent that reducing avoidable plutonium losses is beneficial to the overall fuel cycle.

The value of a 0.1% loss of plutonium, assuming a fuel value of \$50/g of plutonium, is about \$5/kg of LMFBR fuel and about \$2/kg of LWR

plutonium recycle fuel. A 5-ton/day fuel fabricating plant could afford operating and/or capital expenses of $25,000/day for LMFBR fuel and $10,000/day for LWR fuel at the breakeven point for each 0.1% reduction in fuel cycle plutonium losses. Thus, substantial sums of money could be easily justified to improve the fuel fabrication process to eliminate insoluble PuO_2.

2.3 Review of Fuel Fabrication Information

Fuel fabricators are generally aware that there might be a problem in dissolving LWR plutonium recycle fuel in reprocessing plants. They are responsive at present only to the reactor specifications for the homogeneity of the fuel, which may result in irradiated fuel that is not completely soluble in reprocessing plants. They tend to view this as a reprocessor problem rather than considering it as an industry problem requiring cooperation between the PuO_2-UO_2 powder supplier (who may be the reprocessor), the fuel fabricator, and the reprocessor. They point out that irradiation improves the solubility of the fuel and that fluorides have been used in reprocessing plants in the past. They seem to be unaware of the extent of the problems that the use of fluorides create for reprocessing.

Several improvements could be made in present fuel fabrication methods to increase fuel solubility without major changes in fuel fabrication costs. These improvements are aimed at improving the homogeneity of the distribution of the PuO_2 in the fuel pellet and the degree of solid solution of PuO_2 in UO_2. All of the available information indicates these are prime factors for improving fuel pellet solubility. Impurities initially in the PuO_2 and UO_2 powders, or introduced into the pellet during fabrication, do not contribute significantly to the insoluble PuO_2 found in present-day FFTF fuel pellets. Fuel solubility can be improved by:

1. Improving the microhomogeneity of the PuO_2-UO_2 stock prior to fuel pellet sintering.
2. Increasing the sintering temperature and sintering time.

For mechanically blended fuels, the microhomogeneity of the PuO_2-UO_2 stock could be improved by:

1. Using very fine PuO_2 powder that is substantially smaller in particle size than present PuO_2. The existing oxalate precipitation process can produce finer powder; future oxalate precipitation systems could be designed to produce even smaller PuO_2 particles, if required.
2. Improving the mixing of PuO_2 and UO_2 powders by using an available intensive grinding device such as a jet mill to simultaneously grind and mix the blended PuO_2-UO_2 feed.

A higher degree of microhomogeneity can apparently be attained by the use of chemical blending techniques such as coprecipitation, direct codenitration, or similar processes* that are capable of providing PuO_2-UO_2 powder that is practically homogeneous on a molecular scale. Preparation of a soluble high-plutonium-content masterblend at the reprocessing plant may be attractive from the standpoint of shipment safeguards and would also be compatible with existing powder-blending pellet-fabrication methods.

Finally, the solubility of both mechanically blended and coprecipitated fuels could be improved by increasing the sintering temperature and/or sintering time. Sintering furnaces capable of continuous duty at 2000°C can be manufactured today. The additional equipment cost to provide longer sintering times or higher-temperature sintering furnaces, or other fabrication process improvements, is probably a very small increase in the total cost of fuel fabrication. The additional cost can be readily justified if it reduces fuel cycle losses by only a few hundredths of a percent.

Although these improvements are suggested primarily to improve the fuel solubility, they may be beneficial for the fuel fabricator by yielding uniform high-quality pellets on a routine basis, with less

---

*The General Electric Corp. proposal to combine ammonia coprecipitation with fluid-bed calcination of the coprecipitated slurry is an example of the type of innovative development work that is needed for the fuel powder preparation steps.

rejects and scrap recycle. The routine production of high-quality pellets would be a significant advantage since scrap recycle can be very costly. Coprecipitation-type powder preparation processes are advantageous in this respect, since the dirty scrap can generally be dissolved without resorting to the use of corrosive fluorides in the scrap-recovery operation.

2.4 A Suggested Criteria for Acceptable Amounts of Insoluble PuO_2 in Fuel

A criteria defining an acceptable degree of PuO_2 insolubility in fuel implies that a precise cost-benefit relationship is established for the fuel fabrication and fuel reprocessing operations, and producing fuel with this degree of insolubility will yield minimum total fuel cycle costs. A final criteria is impossible to specify at this time because:

1. The relationship between fuel fabrication costs and varying amounts of insoluble PuO_2 in the resulting fuel is unknown.
2. The precise effect of irradiation for reducing the amount of insoluble PuO_2 in fuel is unknown.
3. The relationship between fuel reprocessing plus radioactive waste disposal costs and the amount of insoluble PuO_2 in the fuel is unknown.

Pending resolution of the above problems, it is suggested that the amount of insoluble PuO_2 in irradiated fuel be no more than 0.01% of the total amount of plutonium present. This percentage should apply to both LWR plutonium recycle fuel and to LMFBR fuel. This criteria appears acceptable because:

1. Current FFTF fuel production methods meet or nearly meet this criteria since full-term irradiation should reduce the amount of insoluble PuO_2 in unirradiated fuel by a factor of 10 or more. This observation indicates that the 0.01% goal for irradiated fuel, which corresponds to 0.1% insoluble PuO_2 for unirradiated fuel, is not impractical from the fuel production standpoint.

2. Lower requirements will not result in significant improvements in losses to wastes. This level is a small part (about 15%) of the total losses that should be achievable in well-designed and carefully operated reprocessing plants.
3. A probability exists that more economic fuel manufacturing techniques can be developed to yield more nearly homogeneous fuel than is currently produced. The apparent costs associated with reducing the insoluble PuO_2 content of fuel are small compared to the cost of losing the plutonium.
4. Reprocessing plant criticality problems associated with this amount of insoluble PuO_2 appear to be minimal.
5. Long-term utilization of uranium resources by LWR plutonium recycle reactors and breeders appears to be maximized. Also, a loss this low will have a minimum adverse effect on the LMFBR doubling time.

The French experience with Rapsodie Fast Reactor fuel supports the thesis that very low levels of insoluble PuO_2 can be attained in irradiated LMFBR fuel.

It is suggested that the dissolution test for determining the amount of insoluble PuO_2 in fuel should use conditions closely approximating reprocessing plant conditions. The test should consist of dissolving the sample for 2 to 3 hr at the boiling point in enough 7 *M* HNO_3 to produce a solution containing about 1.2 to 1.5 *M* heavy metal if all the sample dissolves. Any solid residue would be separated and leached again in 7 *M* HNO_3 for an additional 2 or 3 hr. Any plutonium in the solid residue from the second leach would be defined as insoluble PuO_2.

The problem of adopting standards requiring very highly soluble fuel is one of convincing the fuel fabricator he should make process changes to eliminate a loss that shows up only on the books of another organization (the reprocessor). The fuel owner (reactor operator) is the only one who is in a position to do this at this time.

3. REVIEW OF FUEL DISSOLUTION INFORMATION

The following discussion provides general background information concerning the problem of dissolving mixed-oxide fuels. Instantaneous dissolution rates for various unirradiated fuel materials, calculated according to the data of Uriarte and Rainey,[1] are presented in Table 3.1. These rates for for homogeneous solid-solution fuels. Heterogeneous fuels tend to dissolve faster at first as the UO_2 matrix is preferentially attacked, leaving behind a high-PuO_2-content residue that dissolves very slowly. Dissolution rates for irradiated fuels are faster than those for unirradiated fuels; in addition, pronounced pitting of the fuel surface occurs during dissolution, resulting in an increased surface area for attack. The fuels shown represent typical LWR, LWR plutonium recycle, and LMFBR fuel compositions, plus various higher-plutonia-content materials that may be encountered in the undissolved residues when heterogeneous PuO_2 fuels are dissolved in pure nitric acid. Recent information indicates that fuel containing about 35% PuO_2 may be considered for the CRBR.[2]

A dissolution rate of 1 mg cm^{-2} min^{-1} is equivalent to a penetration rate of about 60 μm/hr. Using a typical 7 *M* HNO_3 dissolvent, LWR plutonium recycle fuels would dissolve about 60% as fast as pure UO_2, whereas 25% PuO_2 would dissolve about 9% as fast as UO_2. Higher PuO_2-content materials that remain after pure nitric acid dissolution of heterogeneous fuels, such as the 80% PuO_2–20% UO_2 residue, dissolve very slowly. For example, a 200-μm particle of this material would require about 700 hr to dissolve in 7 *M* HNO_3 and about 6 hr to dissolve in 7 *M* HNO_3–0.05 *M* HF, assuming the particle has a smooth surface and pitting does not occur during dissolution. Complete homogenization and diffusion of UO_2 may not occur during pellet sintering or subsequent irradiation. Thus, the core of high-PuO_2-content particles could be pure PuO_2 and virtually indestructible in pure nitric acid. The preceding relative dissolution-rate information illustrates the practicality of dissolving low-PuO_2-content solid-solution fuels in pure nitric acid in a reasonable time.[3,1,4] The high-PuO_2-content residues from nonhomogeneous fuels require the use of fluoride-catalyzed nitric acid to dissolve them in a reasonable length of time.

Table 3.1. Instantaneous dissolution rates for 90% theoretically dense fuel materials

Fuel material description	Dissolution rate (mg cm^{-2} min^{-1}) in indicated solution			
	12 *M* HNO_3	7 *M* HNO_3[a]	2.25 *M* HNO_3,[b] 1 *M* heavy metal	7 *M* HNO_3,[c] 0.05 *M* HF
UO_2 LWR fuel	19.2	6.5	1.4	
5% PuO_2-UO_2 (LWR plutonium recycle fuel)	12.4	4.0	0.74	
25% PuO_2-UO_2 (FFTF fuel)	2.1	0.55	5.6×10^{-2}	
35% PuO_2-UO_2[d]	0.88	0.21	1.6×10^{-2}	
80% PuO_2-UO_2[e]	1.7×10^{-2}	2.4×10^{-3}		∿0.3
PuO_2	2.9×10^{-3}	3.4×10^{-4}	3.6×10^{-6}	4.3×10^{-2}

[a]Typical reprocessing plant dissolvent composition for LWR fuels.

[b]Typical reprocessing plant dissolver product solution.

[c]Typical dissolvent composition for high-PuO_2 residues difficult to put into solution. [J. H. Goode, *Hot-Cell Dissolution of Highly Irradiated 80% UO_2–20% PuO_2 Fast Reactor Fuel Specimens*, ORNL-3754 (October 1965)].

[d]Fuel composition at or near the composition limit above which two phases form, one being PuO_2-rich and very difficult to put into solution in HNO_3. [T. L. Marklin and R. S. Street, "The Uranium-Plutonium-Oxygen Ternary Phase Diagram," *Inorg. Nucl. Chem.* 29: 2262-2280 (1967].

[e]Typical composition of undissolved residue from a nonhomogeneous fuel after a boiling 12 *M* HNO_3, 12-hr dissolution test. [R. E. Lerch, *Dissolution of Unirradiated Mechanically Blended, Sol-Gel, and Coprecipitated Mixed Oxide Fuel*, HEDL-TME 72-67 (June 1972)].

3.1 LWR Plutonium Recycle Fuels

3.1.1 Dissolution data

Very little information is available on the dissolution of test samples of LWR plutonium recycle fuels; no information is available for the fuels that were actually irradiated in power reactors in the USAEC Plutonium Recycle Program and in the Edison Electric Institute (EEI) Plutonium Recycle Programs. These programs investigated the basic technology of plutonium recycle and included irradiation of full-size plutonium-fueled assemblies in boiling water and pressurized water power reactors.

Schiefelbein and Lerch[5] investigated fuel made by pelletizing and sintering mixed oxides and by compacting loose mixed oxides in the fuel tube. They summarized their results for pelletized fuel as follows:

> The dissolubility of unirradiated cold-press-sinter pellet fuel containing UO_2–4 wt % PuO_2 was examined as a function of fuel pellet pressing pressure and sintering conditions. It was found that, with a pressing pressure of 32,000 psi and a sintering time of 6 to 10 hr at 1650 to 1700°C, sufficient UO_2-PuO_2 solid-solution formation occurs to render the fuel readily soluble in boiling 12 *M* nitric acid. No direct correlation between pellet pressing pressure and dissolubility was observed for pressures in the range 32,000 to 56,000 psi. Cold-press-sinter pellet fuel rods (0.5 and 2.0 wt % PuO_2), which had been irradiated to a maximum burnup of 11,700 MWd/MTM, were likewise found to be readily soluble in boiling 12 *M* nitric acid.
>
> Dissolution rate studies with unirradiated UO_2–4 wt % PuO_2 cold-press-sinter pellet fuel indicated that little or no preferential dissolution of UO_2 takes place in boiling 12 *M* nitric acid when the fuel has been sintered 8-10 hr at 1650° to 1700°C. Thus, large accumulations of undissolved PuO_2 during dissolution of such fuels should be considered unlikely when terminal nitric acid concentration remains near 12 *M*.

Schiefelbein and Lerch state that the sintering temperature is the fabrication process variable having the greatest effect on dissolution properties[3] and that the sintering temperatures and sintering times chosen for their study of unirradiated fuel were, in retrospect, such as to yield a solid solution of PuO_2 in UO_2 in the pellet; therefore,

no major differences in pellet solubility were noted before and after irradiation. The sintering times used were 1-1/2 to 2-1/2 times longer than usual in small-scale commercial LWR PuO_2 recycle-fuel-pellet production, where 4 hr at a temperature of about 1650°C is the usual sintering treatment.[6] The dissolution test conditions (6 hr exposure to boiling 12 *M* HNO_3 at acid/metal mole ratios of ⩾30) were not representative of conditions in LWR fuel reprocessing plants where UO_2 fuel dissolving is generally done in a few hours with about 6 to 8 *M* HNO_3 at an initial acid/metal mole ratio of about 6. (See Appendix A for description of LWR reprocessing plant dissolver systems.) These conditions are chosen to yield a dissolver product with a high heavy-metal content (∿1 *M*) and low acidity (1.5 to 3 *M*) for direct use as solvent extraction feed, to prevent excessively rapid initial dissolution rates, and, in some reprocessing plants, to minimize dissolver and nitric acid recovery equipment corrosion by not requiring plant use of highly concentrated nitric acid.

For the above laboratory dissolution test conditions, the initial dissolution rate of unirradiated mechanically blended 5% PuO_2-UO_2* is estimated to be about 12.4 mg min^{-1} cm^{-2} in 12 *M* HNO_3 (Ref. 1) and remains essentially constant throughout the test due to the large excess of acid (acid/metal mole ratios of ⩾30). However, for reprocessing plant dissolution conditions using 7 *M* HNO_3, the same fuel dissolves initially at a rate of 4 mg min^{-1} cm^{-2}. Nitric acid is depleted by the reaction, and the dissolution rate decreases to a value of about 1.4 mg min^{-1} cm^{-2} in a 2.25 *M* HNO_3, 1 *M* heavy-metal dissolver product solution.[1] The foregoing rates apply to a batch dissolver system; for a continuous dissolver, the dissolution rate is constant at about 1.4 mg min^{-1} cm^{-2}. This rate differential illustrates a common problem with much of the PuO_2-UO_2 fuel dissolution data reported for both LWR and LMFBR fuels. Laboratory-type solubility tests, such as those described above, were originally designed to screen fuels that were

---

*This percentage is cited for illustration purposes instead of 4% PuO_2-UO_2 because actual dissolution rate data were reported in Ref. 1 for this plutonium concentration in the range of interest for LWR plutonium recycle fuel.

difficult to put into solution for relative solubility.[3,7] The test is adequate for that purpose; however, the results do not represent the much lesser amount of dissolution and slower dissolution rates that will be obtained with the milder reprocessing plant dissolution conditions. It is a misleading test for plant use. A standardized reprocessing plant-oriented dissolution test procedure is needed. However, the dissolution was done batchwise in the Nuclear Fuel Services plant, was designed to be done batch-continuously in the Midwest plant, and will be done continuously in the Allied General Nuclear Services plant (Appendix A). Thus, each plant may find it necessary to independently correlate a standardized fuel solubility test procedure with its own dissolution operations.

Schiefelbein and Lerch[5] tested about 17 samples of 4% PuO_2-UO_2 fuel and found an average of 0.005% undissolved residue. Dissolution-rate tests on two pellets showed a progressive increase in the plutonium content of the undissolved residue, similar to what would be expected for an incompletely homogeneous fuel. It is likely that the observed average of 0.005% undissolved residue[5] was ⩾60% PuO_2 (Ref. 7) and contained from 0.075% to as much as 0.125% of the plutonium originally in the pellet. The dissolution of these pellets was good but probably not complete insofar as the plutonium was concerned, even though the pellets were subjected to a rather drastic sintering operation (⩾1650°C for ⩾8 hr). The fuel fabrication conditions for the irradiated fuel specimens were similar to the conditions for the unirradiated fuel; therefore, solubility after irradiation was expected due to a high degree of solid-solution formation before irradiation and an anticipated improvement in solubility due to irradiation. Irradiation improved the solubility of the pellets; consequently, the dissolution-test conditions were changed to 6-hr exposure to boiling 12 *M* HNO_3 at an acid/metal mole ratio of 16 so that the test would be more sensitive to small differences in pellet solubility. Pellets initially containing 0.5% PuO_2 irradiated up to 11,705 MWd/ton and selected from the hottest part of the fuel rod were completely soluble.* Other pellets containing 2% PuO_2 and irradiated

*This amount of irradiation represented a heavy-metal burnup greater than the 0.5% plutonium originally present.

to 3220 and 3290 MWd/ton had an average residue of 0.014 wt %; this residue was not analyzed, so it is not known whether it was PuO_2 or insoluble metallic fission products.[8] No irradiated pellets containing 4% PuO_2 were tested. Tests with vibrationally compacted 2% PuO_2 fuel illustrated the effect of irradiation on fuel solubility. This fuel represents an extreme case of nonhomogeneity since PuO_2 was mixed with UO_2 and the compacted mixture was not sintered; therefore, no PuO_2-UO_2 solid solution occurred in the unirradiated fuel. Before irradiation, 65.4% of the plutonium was undissolved. Irradiation to 2884 MWd/ton (∿6.3 kW/ft) resulted in negligible improvement in solubility and no restructuring of the compacted oxides. Irradiation to 9630 MWd/ton reduced the insoluble residue to 0.024 wt %, or from 0.7 to 1.2% of the PuO_2 (⩾54-fold improvement), assuming the residue contained ⩾60% PuO_2. Restructuring occurred with the formation of an extensive region of columnar grain growth and a centerline void, which is indicative of the high linear heat rating of the rod (∿2600°C centerline temperature) and of the reduced thermal conductivity of the unconsolidated fuel particles before irradiation. (Centerline void formation is not normal for LWR fuel, although minor restructuring may occur.) Columnar grain growth results in complete solid-solution formation and fuel solubility. The improvement in solubility was greater than could be attributed to the columnar grained region; thus irradiation was improving the solubility of the unaffected part of the fuel by an unexplained mechanism.[5] Typical fuel pellets irradiated under normal power reactor conditions would exhibit a considerably smaller improvement in solubility than did the vibrationally compacted test specimen.

The only other published data on irradiated LWR-type plutonium fuels were obtained by Goode,[9] who used 8 *M* HNO_3 to dissolve pelletized 5% PuO_2-UO_2 fuel that had been irradiated to 10,000 and 20,000 MWd/ton. For two 10,000-MWd/ton samples, the plutonium remaining in the residues amounted to 0.11 and 1.0%; for two 20,000-MWd/ton samples, the undissolved plutonium amounted to 0.04 and 11.4%. The acid used on the sample yielding the 0.04% plutonium residue contained fluoride, so it is possible that the residue would have been much larger if pure nitric

acid had been the dissolvent.[1] The sample with the 11.4% undissolved PuO_2 residue may have been from fuel made by pressing relatively large PuO_2 particles in a UO_2 matrix; if so, the high insolubility noted would be expected since it would be difficult for irradiation to completely erase this extreme type of nonhomogeneity. No useful conclusions can be made from this limited series of experiments.

Unpublished information was provided on the unirradiated 6.6% PuO_2-UO_2 pellets made for the Saxton Reactor Plutonium Program.[10] The first mechanically mixed pellets had about 2 to 3% of the plutonium present as an insoluble residue, according to a British test by Harrison et al. for PuO_2-UO_2 solid-solution formation.[7] This test is more rigorous than reprocessing plant dissolver conditions. Fuel pellet manufacturing process control was improved, and the insoluble residue was reduced to 0.2 to 0.3% of the PuO_2. Fuel made by the coprecipitation method for the same program may have had about a 0.1% insoluble residue. These tests were made as part of a proposal to use the dissolution test as a measure of fuel homogeneity rather than to use other methods such as alpha autoradiographs. The proposal was not accepted by the AEC. The observation was made that process control for today's LWR fuel fabrication methods may be better than in the early days for the USAEC and EEI plutonium recycle programs, perhaps leading to lower insoluble PuO_2 residues.[10] However, LWR PuO_2 recycle fuel pellets have been produced recently containing particles of more than 40% PuO_2.[11] Therefore, it is not likely that the solubility problem is eliminated for LWR plutonium recycle fuel made according to the most recent state of the art.

The available test data indicate that the insolubility problem can be eliminated if desired. For example, 6 of the 17 samples of 4% PuO_2-UO_2 fuel tested by Schiefelbein and Lerch[5] were completely soluble before irradiation. Lerch[3] later noted that 25% PuO_2-UO_2 fuel, which is more difficult to dissolve than 4% PuO_2 fuel, was completely soluble when prepared by coprecipitation. Uriarte and Rainey[12] demonstrated total dissolution of mechanically blended 5% PuO_2 fuel pellets in 1-1/3 hr in 10 *M* HNO_3 at an acid/metal mole ratio of about 20. These

pellets were sintered for 16 hr at 1000°C to get thorough solid-solution formation and complete dissolution. Coprecipitated 5% PuO_2 fuel pellets sintered at 1600°C for only 1 hr dissolved in 4 hr under similar dissolution conditions. In cyclic dissolution tests, Uriarte and Rainey[13] demonstrated the preparation of a solution containing 285 g of uranium per liter and 80 g of plutonium per liter in about 3 *M* HNO_3 by dissolving 28% PuO_2-UO_2 pellets in 6.4 *M* HNO_3. This material is more difficult to dissolve than 5% PuO_2-UO_2. They reported that irradiated fuel dissolves faster than unirradiated fuel.

No dissolution data are available for any of the irradiated fuels used in the commercial power reactor PuO_2 recycle program in the United States. This oversight and an overly optimistic interpretation of the Schiefelbein and Lerch data,[5] without considering that it was obtained from a small batch of fuel prepared using processing conditions that may not be typical of routine LWR PuO_2 recycle fuel production, may be responsible for statements by LWR PuO_2 recycle fuel fabricators (typically expressed to the author in the course of this study) indicating that they were not aware of the existence of a fuel insolubility problem for the reprocessor.[14] Although a problem with insoluble PuO_2 in irradiated LWR plutonium recycle fuel made by today's methods may not exist, this assumption is completely unsupported at this time by data taken in laboratory-scale tests using realistic reprocessing plant dissolution conditions.

3.1.2 Fuel pellet homogeneity specifications

The specifications for pellets fabricated for various LWR PuO_2 recycle fuel irradiation tests in this country typically required that 95% of the plutonium-rich particles in the pellet were less than 50 μm in diameter, with none larger* than 300 to 500 μm.[15,16] Pellets were prepared from both mechanically blended and coprecipitated PuO_2-UO_2 powder sources. No information is available on the amount of insoluble PuO_2

*This upper size limit was based on preventing localized melting of the fuel cladding by high-PuO_2-content areas on the surface of the pellet.

dissolution residue in fuel that will meet the minimum requirements for homogeneity, as specified above. No information is available that correlates pellet homogeneity with the dissolution properties for fuels that were actually used in the program. Alpha autoradiographs of some pellets revealed that the maximum expected particle was 205 μm.[16] Some samples of Fast Flux Test Facility (FFTF) fuel vendor qualification pellets were found to have from 200- to 500-μm particles of PuO_2 in the dissolution residue,[17] with a rather high insoluble PuO_2 content (see Sect. 3.2.1). Based on this, we can only speculate that PuO_2 recycle fuel barely meeting the minimum requirements of the previously mentioned LWR homogeneity standard would have been classified as a poor fuel from the standpoint of dissolvability and probably would not be completely soluble after irradiation. For example, if 5% of the PuO_2 particles in a fuel were 200 μm in diameter and were insoluble, and the other 95% of the particles were 50 μm in diameter and were all soluble, about 77% of the plutonium would be insoluble in the unirradiated LWR fuel.

An ASTM specification for the homogeneity standard to be used for future PuO_2 recycle fuel pellets is in the proposal stage.[18] The proposed ASTM specification will permit PuO_2-rich particles up to 200 μm in diameter, which could contain up to 100% PuO_2. No limit is set on the number of these large particles, although it was stated that the mechanics of mixing fine powders would require that the majority of the particles would be less than 200 μm, if 200 μm is the allowable upper size limit.[18] This tentative specification does not seem to be much better than earlier specifications for fuel-pellet homogeneity from the standpoint of ensuring dissolution in nitric acid, and indeed may be worse than before. For example, pellets made with a very coarse PuO_2 powder thoroughly blended with UO_2, or pellets made with very fine PuO_2 powder that is agglomerated and poorly dispersed in UO_2 might be satisfactory according to the specifications (majority of PuO_2 particles less than 200 μm, with none larger than 200 μm) but could be highly insoluble. The fuel fabricator would prefer even looser specifications, permitting larger plutonium-rich areas to make pellet production easier.[10,11,14]

3.2 LMFBR Fuel Dissolution Data

3.2.1 HEDL data

Lerch[3] measured the dissolubility of unirradiated mixed-oxide fuel fabricated by the three candidate LMFBR fuel fabrication processes. He investigated the effect of fabrication process variables on the dissolubility of the fuel and developed statistical models that predicted the effect of these variables on the solubility of the fuel pellet. The dissolution tests used a standard procedure consisting of a 6- to 12-hr exposure to boiling 12 *M* HNO_3 at nitric acid to uranium plus plutonium mole ratios of ⩾50. As previously noted, this test is adequate for investigating differences in fuel dissolubility for fuels difficult to put into solution, but is more stringent than reprocessing plant dissolver conditions. Lerch observed that the fabrication process variable changes that promoted greater homogeneity and the solid solution of PuO_2 in UO_2 were beneficial for improving the solubility of the fuel pellet. For comparable fabrication conditions, coprecipitated fuel was better than mechanically blended PuO_2-UO_2 fuel and was fully soluble for all test conditions. The solubility of mechanically blended fuel was improved most by higher sintering temperatures, longer sintering times, and by using smaller-particle-size PuO_2 powder. All of these factors promote a more complete solid solution of PuO_2 in UO_2 and greater homogeneity throughout the pellet. Complete dissolution of the mechanically blended pellets was difficult to obtain with pure nitric acid. This difficulty was due to incomplete solid-solution formation and incomplete diffusion of the plutonium to eliminate local areas in the pellet containing ⩾35% PuO_2 in UO_2.[1,19] Fluoride was effective in dissolving these residues. Lerch also observed that pellets having a high "figure of merit"* generally had good dissolubility; however, this was not an absolute

---

*A method of determining PuO_2 homogeneity in the fuel pellet based on the calculated energy distribution rate at a point in the pellet compared with the theoretical energy distribution rate that would exist in a completely homogeneous fuel. Fast Flux Test Facility fuel specifications require a figure of merit ⩾0.960 (1.000 represents a completely homogeneous fuel).

relationship as exceptions occurred. In general, pellets meeting the minimum figure of merit requirement of 0.960 can be expected to have a dissolubility test residue of <10 wt % of the original plutonium in 25% PuO_2 pellets.[3] Figure of merit is an inadequate criterion at this time for defining acceptable fuel-pellet solubility for reprocessing purposes.

Lerch reported the results of dissolution experiments with irradiated fuels.[20] The results are presented in Table 3.2, with additions giving the estimated amount of undissolved plutonium in the unirradiated fuel along with estimates of the plutonium solubility improvement factors due to the effects of fuel irradiation. The improvement due to irradiation is relative, since the model[3] for predicting the plutonium residue in unirradiated fuel as a function of fabrication conditions has a standard deviation of ±2.58%, and only a very limited number of samples were tested. However, even for the most poorly fabricated fuel, irradiation helps the dissolubility as does a high centerline operating temperature for the pellet. Nonhomogeneity existing in the center of the pellet is thereby eliminated, but the other part of the pellet may be unaffected. The local plutonium enrichment that occurs is probably of little or no consequence for dissolution, since the slowdown in the overall dissolution rate due to the higher plutonium content may be offset by the formation of a more thorough solid solution. Samples initially having very low predicted residues before irradiation had an average of about 0.04% of the plutonium as residue after irradiation.

Some vendor-supplied FFTF fuel pellets from initial production samples were tested for solubility[17] with the standard test of 12 hr in boiling 12 *M* HNO_3. Fuel made by mechanical blending had an average total residue of 0.42 wt % (16 fuel lots; minimum residue, 0.025%; maximum residue, 1.18%; standard deviation, ±0.36%), equivalent to about 1.7% of the original plutonium. The residues were very fine, with few particles larger than 50 μm in size. The completeness of pellet dissolution was close to that predicted from earlier dissolution data, the average predicted value being 0.98 wt % of the original pellet. Some of the variation in dissolution data was predictable,[3] based on fabrication differences. For example, pellets with the largest residue (1.18%)

Table 3.2. Summary of HEDL dissolution experiments on irradiated mechanially blended 25% PuO_2 fuel[a]

Sample	Fuel burnup (MWd/MT)	Power level (kW/ft)	Estimated centerline temperature (°C)	Fabrication conditions				Dissolution[b]	
				Sintering temperature (°C)	Sintering time (hr)	Source of PuO_2	Predicted Pu residue, % of Pu[c]	Pu residue, % of Pu	Solubility improvement factor due to irradiation
BNW1-4	71,000	19.1	2700-2800	1680	6	Metal	None	0.02	
BNW1-3	113,500	16.0	2700-2800	1680	6	Metal	None	0.02	
BNWL-5	137,000	17.9	2700-2800	1680	6	Metal	None	<0.01	
PNLX-1	4,200	5.3	1650	1600	8	Metal	1.94	0.05	39
PNL59-5	10,000	7.5	1650-1750	1650	8	Metal	None	0.02	
PNL59-7	68,400	13.5	2200-2400	1650	8	Metal	None	0.02	
PNL3-23	26,000	5.4	1250-1350	1675	6	Oxalate	None	0.07	
PNL3-27	25,000	5.0	1230-1370	1500	6	Metal	9.82	0.75	13
PNL4-1	40,450	9.6	1750-1850	1690	6	Oxalate	None	0.03	
PNL4-26	37,900	9.2	1750-1900	1450	6	Oxalate	14.03	0.82	17
PNL4-34	38,600	8.6	1850-1950	1500	6	Metal	9.82	0.14	70
PNL5-5	45,650	13.5	2350-2450	1675	6	Metal	None	0.11	

[a]R. E. Lerch and C. R. Cooley, "Dissolution of Irradiated Mixed-Oxide Fast Reactor Fuel," *Trans. ANS, 1972 Annual Meeting, Las Vegas, Nevada, June 18-22,* 15(1): 86-87.

[b]12 hr in large excess of boiling 12 *M* HNO_3.

[c]According to the statistical prediction method for unirradiated fuel in R. E. Lerch, *Dissolution of Unirradiated Mechanically Blended, Sol-Gel, and Coprecipitated Mixed-Oxide Fuel,* HEDL-TME 72-67 (June 1972). ("None" generally means ≤1% insoluble plutonium residue.)

had the lowest sintering temperature (1660°C), and the smallest residue (0.025%) corresponded to the highest sintering temperature (1700°C). In general, duplication of dissolution results within pellet lots was very good, indicating general consistency during the fabrication of the various pellet lots. Fuel made by coprecipitation had a smaller residue (0.2 wt % of the original pellet), which represented about 0.8% of the original plutonium (six fuel lots; minimum residue, 0.04%; maximum residue, 0.38%; standard deviation, ±0.12%). Based on earlier data, it was expected that the undissolved residue would amount to 0.01 to 0.2 wt % of the original pellet. However, the residue from each of the six lots had very large particles, with individual particles ranging between 200 μm to 500 μm in length, and there were larger differences within individual pellet lots than with the mechanically blended fuel. It appears that something was amiss with the coprecipitation process to produce this gross nonhomogeneity.* Irradiation might not guarantee that this fuel would be soluble.

Recent dissolubility tests on FFTF production batches of pellets show a remarkable improvement in solubility compared with earlier pellets.[21] The mechanically blended pellets had an average total residue of about 0.014 wt % undissolved (15 fuel lots; minimum residue, 0.000% for four samples; maximum residue, 0.048%; standard deviation, ±0.015%), which is equivalent to about 0.058% of the original plutonium. The coprecipitated pellets had an average total residue of about 0.012 wt % (15 fuel lots; minimum residue, 0.000% for eight samples; maximum residue, 0.060%; standard deviation, ±0.018%), which is equivalent to about 0.046% of the original plutonium. No examination of the size of the residue particles had been made as of September 15, 1975.

3.2.2 ORNL data

The first investigation of consequence of define the necessary conditions for successful reprocessing plant dissolution of PuO_2-UO_2 was

---

*Information from M. Walling, Kerr-McGee Corp., August 7, 1975, confirms that precipitator control problems were encountered during early pellet production batches.

by Uriarte and Rainey.[1] This report presents data on the amount and rate of dissolution of UO_2 and PuO_2-UO_2 pellets as a function of acid concentration and PuO_2 content. Rate-of-dissolution equations were also derived from the data. They showed that fuels having a high degree of homogeneity (i.e., coprecipitated fuels and thoroughly sintered, well homogenized, mechanically blended fuels) dissolved more slowly and more completely than the usual mechanically blended fuels. Irradiated fuel dissolved much faster than unirradiated fuels. Low concentrations of hydrofluoric acid in the dissolvent were necessary for rapid dissolution of refractory PuO_2 residues (also referred to therein as "insoluble PuO_2" since it cannot be dissolved in pure nitric acid in reasonable lengths of time). Uriarte and Rainey also investigated dissolution using low-acid concentrations, and they successfully produced a simulated reprocessing plant dissolver product containing 285 g of uranium plus 80 g of plutonium per liter in 3 *M* HNO_3, starting with a 6.4 *M* HNO_3 dissolvent and pellets containing 28% PuO_2. With Goode,[22] they investigated the dissolution of irradiated 20% PuO_2-UO_2 without the use of fluoride and obtained complete dissolution in 3 hr in 5 *M* HNO_3. Irradiated 20% PuO_2-UO_2 dissolved about five times faster than unirradiated fuel. Although they successfully dissolved unirradiated pellets containing as much as 35% PuO_2 in pure 14 *M* nitric acid in 4.3 hr, they suggested that the best dissolvent for a reprocessing plant would be a mixture of nitric and hydrofluoric acids. This suggestion was made because they thought the fuel fabricator might not make the extra effort to achieve the high degree of homogeneity required for complete dissolution in pure nitric acid. For the current opinion of all U.S. fuel reprocessors and one European fuel reprocessor regarding the use of fluorides in their plants, see Sect. 4.1.

Goode et al.[4] recently summarized all the dissolution data generated at ORNL in the last ten years for LMFBR-type fuel ranging in PuO_2 content from 15 to 28%. He concluded that fabrication methods that tended to promote solid solution of PuO_2 in UO_2 and fuel irradiation were beneficial for promoting dissolution in pure nitric acid. The fuel was from a variety of sources and was not, generally, well characterized as to the solubility before irradiation. In a few cases where this was

done, both coprecipitated and mechanically blended fuels had PuO_2 residues both before and after irradiation, although the amount of undissolved PuO_2 after irradiation was much lower. As noted by both Goode and Lerch, poor fabrication conditions can carry through irradiation as undissolved PuO_2. A considerable range of response to the dissolution tests was obtained, as would be expected from the large number of sample fuels, irradiation conditions, and changing program goals. If one set of dissolution conditions is selected, namely, contact of the fuel sample with 7 to 8 *M* HNO_3 for a few hours, and neglects all other parameters involved (sintering temperature, irradiation conditions, plutonium content, etc.), Goode states that the loss to the residue from irradiated coprecipitated fuel was 0.2 ± 0.1% of the original plutonium, and the loss from mechanically blended irradiated fuel rated as a soluble fuel before irradiation was 0.10 ± 0.05% of the original plutonium. Two samples of mechanically blended insoluble fuel that gave residues containing about 16% of the plutonium before irradiation yielded residues that contained 0.01 and 0.03% of the original plutonium after irradiation to 85,150 MWd/ton and dissolution in 8 *M* HNO_3 for 6 hr. Thus, considerable variation in irradiation response was observed. It is surprising that the coprecipitated fuels gave larger residues. However, Goode noted that much of the coprecipitated fuel exhibited plutonium segregation response, that is, the residues became increasingly enriched in plutonium as the dissolution progressed, and rates eventually became vanishingly small.[1] The obvious conclusion is that these coprecipitated fuels were not necessarily homogeneous solid solutions of PuO_2 in UO_2 and this gave insoluble plutonium residues. These fuels were probably like the early samples of vendor-supplied FFTF coprecipitated fuel pellets. It is interesting to note on a completely nonselective basis that 25% of all coprecipitated samples and 41% of all mechanically blended samples had residues amounting to $\leqslant$0.05% of the original plutonium when dissolved in nitric acid of various strengths. Goode concludes, "These tests have shown that when fuels are made in such a way that a homogeneous solid

solution of up to 28% PuO_2* in UO_2 is formed, the mixed oxide will dissolve in nitric acid without the necessity of adding a corrosive dissolution catalyst such as HF."[23] He suggests, based on the extremely variable response of the wide spectrum of fuel samples he tested, that a reprocessing plant should use a secondary dissolver for fluoride treatment of the separated, solid, high-PuO_2-content residues from the primary dissolver to ensure dissolution of refractory PuO_2. However, it appears that adequate, well-standardized fuel fabrication methods and quality assurance should yield soluble fuel, and fluorides should not be required for dissolution, even before the fuel is irradiated.

The corrosive nature of fluorides has resulted in attempts to find other substances that will promote the dissolution of refractory PuO_2. Cerium in the tetravalent form has been shown to be effective for speeding up the dissolution of unirradiated PuO_2 in nitric acid.[1,25] This observation suggests that cerium could be used as a substitute for fluoride even though Ce^{4+}-nitric acid solutions are corrosive to stainless steel.[26,27] Dissolution tests using irradiated fuel showed that fission product ruthenium catalytically reduces Ce^{4+} to Ce^{3+}, destroying its usefulness as a PuO_2 dissolvent.[28] There is no practical way to separate ruthenium from the insoluble PuO_2 residues when processing irradiated fuel. Recent laboratory experiments[29] showed that highly refractory PuO_2 microspheres could be dissolved in 6.35 *M* hydriodic acid in less than 8 hr. The solution was evaporated to dryness and the solids taken up in nitric acid to yield a 0.123 *M* Pu^{4+} solution containing <0.0008 *M* iodine. The use of this dissolution procedure in a reprocessing plant would require complete confinement of the iodine within the secondary dissolver system for corrosion prevention in the balance of the plant and minimum loading of radioactive iodine collection systems.

---

*The limit of his tests. The real limit may be 35%, since PuO_2 concentrations ⩾35% form a secondary plutonium-rich phase[19] that is very difficult to put into solution in nitric acid. This observation coincides with similar British information.[24] Recent information indicates that a fuel containing about 35% PuO_2 may be considered for the Clinch River Breeder Reactor.[2]

No substances capable of promoting the dissolution of PuO_2 under practical reprocessing plant conditions without some serious corrosion or other technical problems have been found.

3.2.3 Foreign data

Some highly significant information is available from the French fast reactor development program. Talmont and Miquel[30] report dissolution results on unirradiated and irradiated PuO_2-UO_2 fuel. They state:

> The results obtained were somewhat scattered according to the different batches of pellets used for these tests. They nevertheless showed the possibility of defining such industrial conditions that dissolution of the oxide at boiling point would be complete in 6 hours for:
>
> A PuO_2 concentration below 35%
>
> A nitric acid concentration higher than 8 moles. $litre^{-1}$
>
> Under these conditions it is not necessary to add hydrofluoric acid, which proves that although a mixture of powders is used, the method of preparation produces pellets composed of a fairly homogeneous solid solution.
>
> Tests on irradiated oxides showed the dissolution rates to be considerably increased by irradiation, one reason for which must be the breaking up of the irradiated oxide. During the last tests carried out in the cell Cyrano on pins irradiated in Rapsodie to 40,000 MWd $\cdot$ t^{-1}, dissolution of the oxide was found to be total in less than three hours for nitric acid concentrations between 6 and 12 moles. ℓ^{-1}, with or without hydrofluoric acid (Figure 1).

Figure 1 (Ref. 30) showed that unirradiated 25% PuO_2-UO_2 fuel could be dissolved completely in 4 hr using 11 *M* HNO_3 to yield a product solution containing 180 g of uranium per liter, 60 g of plutonium per liter, and 8 *M* HNO_3. For fuel irradiated to 40,000 MWd/ton, complete dissolution was obtained in 1.5 hr using 6.4 *M* HNO_3 to yield a product solution containing 180 g of uranium per liter, 60 g of plutonium per liter, and 3.7 *M* HNO_3. These results (complete dissolution in a few hours in 6 *M* HNO_3) were confirmed by additional work in Cyrano and AT.1 using fuels reaching up to 60,000 MWd/ton.[31] Lefort states "For us the oxyde matrix is completely dissolved using nitric media without HF."[31] Tres bien!

Boudry and Miquel[32] have reported the results of reprocessing >400 kg of highly irradiated fast reactor fuel (up to 80,000 MWd/ton) in the AT.1 pilot plant at La Hague, with primary emphasis on the solvent extraction system performance. They noted that dissolution results were somewhat scattered according to the different batches of pellets, and they repeated the earlier observations of Talmont and Miquel regarding complete dissolution without the use of fluorides. They observed that irradiation increases dissolution rates, but that some recent Cyrano hot-cell tests with 75,000 MWd/ton fuel required over 10 hr in 11 *M* HNO_3 "to achieve a sufficiently high dissolution of the fissile matter." Their main concern was the solids problem resulting from the insoluble noble-metal fission product residues in the dissolver product and the resulting feed clarification problem. Recent correspondence[33] on fuel dissolution included information on the mixed-oxide powder blending process for fabricating Phenix fuel.[34] In Boudry and Miquel's fabrication plant, the PuO_2 and UO_2 (60 to over 90% enriched in ^{235}U for Rapsodie, natural uranium for Phenix)[32] powders are ground together after mixing. Other sources report the grinding is a dry ball milling operation. This probably is the key step for achieving homogeneity (and good dissolution), since grinding may break up PuO_2 particle agglomerates and thoroughly disperse the PuO_2 in the UO_2. The UO_2 was generally prepared by dry conversion methods from UF_6. Some was also prepared by denitration of uranyl nitrate solution and was successfully made into fuel pellets. Chesne stated that "dissolution is achieved on an industrial scale without loss of plutonium."[33]

German sources seem to be limited to one study on the effect of fabrication process variables (principally sintering temperature and sintering time) on the dissolution properties of unirradiated 15% PuO_2-UO_2 fuel.[35] Baehr and Dippel state, "If the correct sintering conditions are observed during fabrication of the fuel, so that a large number of mixed crystals of PuO_2 and UO_2 are present, dissolution can be achieved without any special difficulties and without the addition of any auxiliary reagents." They also note that it is undesirable to use corrosive fluorides in a fuel reprocessing plant. They dissolved the

fuel in 14 *M* HNO_3 giving a product solution containing about 1.8 *M* (uranium plus plutonium) and about 7.6 *M* HNO_3, which they judged satisfactory for dilution to a desirable extraction feed concentration. They found, like others, that high sintering temperatures and longer sintering times promoted mixed crystals or solid solution of the PuO_2 in UO_2, increased the solubility of the fuel, and decreased the dissolution rate of the fuel.

The importance of a homogeneous fuel to the fuel reprocessor was noted by Smith and White[36] as one of the reasons for selecting the coprecipitation process and then sintering to a single-phase pellet structure for the initial core of the British Prototype Fast Reactor. This decision is apparently based on earlier work in which it was observed the single-phase, coprecipitated mixed oxides containing up to 30% PuO_2 were easily soluble in nitric acid.[24] No other information seems to be available from the British Fast Reactor Development Program.

REFERENCES FOR SECTION 3

1. A. L. Uriarte and R. H. Rainey, *Dissolution of High-Density UO_2-PuO_2 and UO_2-PuO_2 Pellets in Inorganic Acids*, ORNL-3695 (April 1965).
2. S. A. Meacham, WARD, personal communication, Nov. 9, 1976.
3. R. E. Lerch, *Dissolution of Unirradiated Mechanically Blended, Sol-Gel and Coprecipitated Mixed Oxide Fuel*, HEDL-TME 72-67 (June 1972).
4. J. H. Goode, C. L. Fitzgerald, and V. C. A. Vaughen, *The Dissolution of Unirradiated and Irradiated $(U,Pu)O_2$ in Nitric Acid*, ORNL-5015 (February 1975).
5. G. F. Schiefelbein and R. E. Lerch, *Dissolution Properties of UO_2-PuO_2 Thermal Reactor Fuels*, BNWL-1581 (June 1971).
6. *EEI — Westinghouse Plutonium Recycle Demonstration Program Progress Report for the Period Ending April 1970*, WCAP-4167-1 (May 1970).
7. J. D. L. Harrison et al., "The Sintering Behavior of Mixed UO_2 and PuO_2 Powders," pp. 140-65 in *Plansee Seminar Proceedings, 1961, Metallwerk Plansee A.G., Reutte/Tyrol 1962*. "Degree of solid solution: this was estimated by measuring the amount of PuO_2 remaining insoluble in 8 *N* nitric acid at 80°C after 16 hours digestion. Under these conditions, PuO_2 in UO_2 solid solutions containing up to 60% PuO_2 will dissolve and PuO_2-rich material will not."
8. R. E. Lerch, HEDL, personal communication, July 25, 1975.
9. *Chem. Tech. Div. Annu. Prog. Rep. for Period Ending May 31, 1968*, ORNL-4272 (September 1968), pp. 42-44.
10. C. S. Caldwell, Babcock and Wilcox Company (NUMEC), personal communication, March 14, 1975.
11. R. Curran, Exxon Nuclear, personal communication to R. A. Bradley, ORNL, Dec. 4, 1974.
12. Ref. 1, p. 46.
13. Ref. 1, p. 50.

14. T. Bullock, Westinghouse Electric Corp., personal communication, E. L. Nicholson, Feb. 11, 1975.

15. Ira Taylor, General Electric Company, personal communication, January 29, 1975 (also see NEDC-12198).

16. *EEI — Westinghouse Plutonium Recycle Demonstration Program Progress Report for Period Ending December 1970*, WCAP-4167(2) (March 1971).

17. C. R. Cooley, HEDL, to H. Schneider, USAEC, letter, "Dissolution of FFTF Vendor Pellets," July 10, 1974.

18. M. G. Bale, Westinghouse Electric Corp., personal communication, July 28, 1975.

19. T. L. Marklin and R. S. Street, "The Uranium-Plutonium-Oxygen Ternary Phase Diagram," *Inorg. Nucl. Chem.* 29: 2262-2280 (1967).

20. R. E. Lerch and C. R. Cooley, "Dissolution of Irradiated Mixed-Oxide Fast Reactor Fuel," pp. 86-87 in *Trans. ANS, 1972 Annual Meeting, Las Vegas, Nevada, June 18-22*, Vol. 15, first issue.

21. C. A. Burgess, HEDL, personal communication to E. L. Nicholson, Aug. 12, 1975.

22. J. H. Goode, *Hot Cell Dissolution of Highly Irradiated 80% UO_2 — 20% PuO_2 Fast Reactor Fuel Specimens*, ORNL-3754 (October 1965).

23. Ref. 22, p. 69.

24. N. Parkinson, "Chemistry of the Fast Reactor Fuel Cycle," *J. Br. Nucl. Energy Soc.* 5: 551-57 (1966).

25. A. S. Wilson, "Method of Dissolving Plutonium Dioxide in Nitric Acid Using Cerium Ions," U.S. Patent 3,005,682, Oct. 24, 1961.

26. W. E. Unger et al., *Aqueous Fuel Reprocessing Quarterly Report for Period Ending June 30, 1973*, ORNL/TM-4301 (August 1973).

27. A. B. McIntosh and T. E. Evans, "The Effect of Metal Species in Irradiated Fuel Elements on the Corrosion of Stainless Steel in Nitric Acid," *Proc. UN. INT. Conf Peaceful Uses At. Energy, 2nd, 1958*, P/30, Vol. 17.

28. W. E. Unger et al., *Aqueous Fuel Reprocessing Quarterly Report for Period Ending December 31, 1973*, ORNL/TM-4488 (June 1974).

29. W. D. Burch et al., *LMFBR Fuel Reprocessing Program Progress Report for Period July 1 to Sept. 30, 1976*, ORNL/TM-5668 (November 1976).

30. X. Talmont and P. Miquel, "First Experiments on the Processing of Breeder Fuels in France," IAEA Panel on Reprocessing of Highly Irradiated Fuels, Vienna, Austria, May 27-30, 1969.

31. G. Lefort, CEA, Fontenay-aux-Roses, to R. E. Blanco, ORNL, personal communication, Nov. 23, 1972.

32. J. C. Boudry and P. Miquel, "Adaptation of the Purex Process to the Reprocessing of Fast Reactor Fuels," Paper 253, *Int. Solv. Extn. Conf., Lyons, France, Sept. 8-14, 1974,* CEA-CONF-2906.

33. A. Chesne, CEA, Fontenay-aux-Roses, to E. L. Nicholson, ORNL, personal communication, Feb. 7, 1975.

34. H. Balley et al., *La Fabrication en France de Coeurs de Reacteurs Rapides a Base de Plutonium et D'Uranium Enriche,* IAEA/SM-173/VIII-14, Brussels Symposium on Fuel and Fuel Elements for Fast Reactors, Brussels, July 2-6, 1973 (also available as AEC-tr-7484).

35. W. Baehr and Th. Dippel, *On the Dissolution of Breeder Fuels Containing PuO_2 in Nitric Acid for Aqueous Reprocessing by the Purex Method,* KFK-673 (EURFNR-471) (July 1967).

36. S. E. Smith and P. A. F. White, "Process and Plan Development for a Large-Scale Plutonium Fuel Element Manufacturing Facility," CEP Symposium Series No. 80, Vol. 63, 1967, *Preparation of Nuclear Fuels.*

4. INCENTIVES FOR PRODUCING SOLUBLE FUEL

The following discussion of the incentives for producing soluble fuel considers only reprocessing- and resource-utilization related factors. Provided the plutonium particles in nonhomogeneous insoluble fuels are small enough so as not to seriously affect local pellet temperatures or endanger the cladding in case of a reactor transient, the effect of this nonhomogeneity on reactor performance of the fuel is small for LWR plutonium recycle fuel[1] and for LMFBR fuel.

4.1 Light-Water Reactor (LWR) Fuel Reprocessors' Opinions Concerning the Use of Fluorides in Their Reprocessing Plants

Light-water reactor (LWR) fuel reprocessors were contacted to determine their positions on reprocessing LWR plutonium recycle fuel that might contain nitric-acid-insoluble PuO_2. Since this survey was made, two U.S. reprocessors, Nuclear Fuel Services and General Electric Co., have discontinued reprocessing services, and the future of others is uncertain pending resolution of the question of whether plutonium recycling will be allowed. The LWR fuel reprocessors are concerned about the problem of insoluble PuO_2 in LWR plutonium recycle fuel. All LWR fuel reprocessors are unanimously opposed to using fluorides in their plants to dissolve insoluble PuO_2. These reprocessors do not want to introduce any chemical into their plants that will expose the equipment to any greater corrosion hazard than that already encountered with pure, fluoride-free nitric acid fuel reprocessing.* They believe that the PuO_2 insolubility problem can be eliminated by the proper choice of conditions for the fuel pellet fabrication process. Any insoluble PuO_2 in irradiated LWR plutonium recycle fuel will be lost to the high-level

---

*The fuel reprocessors also indicated that they do not plan to use fluoride to enhance zirconium decontamination in the first solvent extraction cycle. The bottom interface pulse columns used and the short-residence-time centrifugal contactor to be used in U.S. plants are less susceptible to zirconium-bearing interfacial crud-formation problems than long-residence-time mixer-settlers, where adequate zirconium decontamination was not obtained until fluoride was added to the solvent extraction feed.[2]

liquid waste.* The owner of an LMFBR reprocessing plant will undoubtedly have the same concern for the integrity of his plant.

The following paragraphs summarize information provided by each fuel reprocessor:

Nuclear Fuel Services (NFS) has had discussions with reactor owners regarding LWR plutonium recycle fuel reprocessing.[3] The NFS position is that the plutonium in any recycle fuel must be fully soluble in nitric acid before irradiation and must be backed up by data that prove that this is the case. Fuel reprocessing contracts will specify this requirement.[3] Nuclear Fuel Services has used HF-$Al(NO_3)_3$-HNO_3 solutions (Thorex dissolvent) to dissolve the stainless-steel-clad Consolidated Edison UO_2-ThO_2 core with no apparent ill effects.[4] The fluoride in the dissolvent is complexed by the aluminum to reduce corrosion, and the dissolved thorium is even more effective as a fluoride complexing agent for reducing the corrosion of stainless steel in subsequent operations. The dissolvent has a low corrosion rate compared with the uncomplexed HNO_3-HF mixture, which is required to dissolve PuO_2 residues. A special dissolver for PuO_2 recycle fuels could be constructed of a more fluoride-resistant alloy such as HAPO-20 (Ref. 5), therefore an uncomplexed fluoride dissolvent could be used. However, this is not attractive since fluorides in the dissolver will rapidly react with the Zircaloy cladding leaving little or no uncomplexed fluoride available to attack the PuO_2.[3] Large amounts of fluoride would have to be used to get complete insoluble PuO_2 dissolution, and most of the cladding might be dissolved. This rather effectively rules out the use of fluorides in the primary dissolver. There is considerable concern about the presence of fluorides in the high-level waste, particularly with plans for a revised plant where NFS will store acidic high-level waste and eventually convert the waste to glass. Nuclear Fuel Services is concerned about fluoride and sulfate corrosion of the waste-calcining and glass-making system. They do not plan to use fluorides in the plant if it can be avoided. If fuel

---

*This is the general opinion expressed by several fuel reprocessors; however, recent limited development work at ORNL indicates that the bulk of the insoluble plutonium ($\geqslant$80%) may remain in the leached cladding in conventional dissolvers (Appendix B).

containing insoluble PuO_2 were processed without using fluorides in the dissolvent, the PuO_2 would go to the high-level waste storage tanks. It would be difficult to determine the amount of loss, since the NFS plant does not have a solids separation capability for the feed solution at this time, and a representative sample of the solids would be difficult to obtain. Finally, it was indicated that the NFS reprocessing interest in LWR plutonium recycle fuels was minimal, since they see an ample supply of UO_2 fuel for the foreseeable future. In general, NFS anticipates enough problems with reprocessing straight UO_2 fuel without taking on the added burden of plutonium recycle fuels. (They were offered the Saxton Reactor plutonium recycle spent fuel assemblies; however, they declined this contract.)[6]

The Midwest Fuel Recovery Plant (MFRP) encountered serious technical problems during cold startup and probably will never operate. General Electric (GE), nevertheless, has some firm opinions regarding the reprocessing of plutonium recycle fuel.[7] No fluorides should be allowed in the high-radiation-level part of the fuel processing plant. The concern is the excessive fluoride-induced corrosion of the dissolver system by the uncomplexed fluoride required for PuO_2 dissolution and the corrosion of waste evaporation and calcination equipment, even though the corrosive effect of fluorides could be reduced by complexing after dissolution. Thus, insoluble PuO_2 in the fuel would go into the high-level waste calcine storage cans. The magnitude of the loss of insoluble PuO_2 will be difficult, if not impossible, to determine because of slurry sampling problems. Also, the instrumentation monitoring method for determining fuel losses in the leached cladding based on detecting ^{144}Pr associated with undissolved fuel particles would be unworkable for detecting PuO_2 in cans of calcined waste. General Electric proposed a specification for the required degree of solubility for acceptance of plutonium recycle fuel for reprocessing. They have discussed this to a limited extent with fuel vendors and reactor owners. Tentatively, GE sugtested that slightly less than 100% dissolution of the PuO_2 must be attained in an approximately 8-hr exposure of the fuel to 8 *M* HNO_3 before the fuel is irradiated. They think that fuel that has this degree of solubility before irradiation will be fully

soluble after irradiation; however, they do not have their own data to back up this opinion. They are concerned that the limited amount of nitric acid solubility data reported for LWR PuO_2 recycle pellets is for "laboratory prepared" pellets and may not represent fuel made by "commercial methods."[8]

The Allied General Nuclear Services (AGNS) plant likewise has some firm opinions about processing spent LWR plutonium recycle fuel.[9] Present plans are not to use fluorides to dissolve PuO_2 recycle fuels, nor will they use them elsewhere in the aqueous processing part of the plant. Their concern about using fluorides involves corrosion of the dissolution system, of the expensive high-level acidic waste storage tanks, and of the waste solidification system. In connection with high-level waste storage, it was noted that the prime incentive for developing the electropulse plutonium-partitioning column was the elimination of the usual ferrous sulfamate reductant for plutonium from the system so that waste tank corrosion would not be accelerated by the iron and sulfate from the reductant. This illustrates the degree of concern about eliminating potentially corrosive materials from their system wherever possible. Although not stated, it is likely that iron would dilute the solidifed high-level waste, and sulfate would be a serious corrosion and disposal problem for high-level waste solidification. If recycle fuel containing insoluble PuO_2 is processed, undissolved PuO_2 will be present in the dissolver product and would be removed by the feed clarification centrifuge. The slurry can be sampled, therefore it would be possible to get an estimate of the amount of undissolved plutonium discarded to the high-level waste system. This plutonium will eventually be confined in containers of solidified high-level waste. Additional insoluble PuO_2 would remain with the leached cladding. An effort is under way at AGNS to develop test procedures and specifications for PuO_2 recycle fuel to meet a reprocessing solubility criterion such as 99.5 to 99.9% solubility of the PuO_2 in nitric acid before fuel irradiation. A small credit would thus be allowed for the improvement in PuO_2 solubility due to irradiation; however, there is still some concern about the solubility of PuO_2 in the less highly irradiated end pellets of the fuel rod and in slightly irradiated fuel assemblies that may require processing.

Exxon Nuclear Company, Incorporated, has serious reservations about using fluoride in their plant, which is now in the planning stage. They do not intend to use fluorides.[10] They point out that fission product zirconium is likely to be present as an oxide accompanying the insoluble PuO_2 and other solids. Any attempt to dissolve the PuO_2 will require a considerable excess of fluoride to react with the zirconium and form the ZrF_2^{2+} complex before free fluoride is available in solution so that the PuO_2 dissolution can go to completion. (For a conceptual LMFBR fuel reprocessing flowsheet for a fuel containing about 10% plutonium, the fission product zirconium fluoride complex requires about nine times more fluoride than does the dissolution of a 2% insoluble PuO_2 residue.[11])

A representative of British Nuclear Fuels, Limited, was contacted regarding the use of fluorides in their reprocessing plant to dissolve LWR PuO_2 recycle fuel.[12] He said that they had made a considerable effort to establish the reliability of their high-level waste storage tanks with fluoride-free plant waste and that they would not consider introducing fluorides in their system. He pointed out, as do other LWR fuel reprocessors that the nitric acid insolubility problem of PuO_2 recycle fuels could be solved by proper attention to the details of the fuel pellet fabrication process.

The reasons for the fuel reprocessors' concern regarding fuel containing insoluble PuO_2 are examined in the following sections.

4.2 Corrosion and Related Problems of Reprocessing Fuel Containing Insoluble PuO_2

4.2.1 Materials of construction for dissolution systems

The preferred material of construction for most applications in fuel reprocessing plants is type 304L austenitic stainless steel. Titanium is used now for more demanding applications such as heat transfer surfaces for evaporators and for plutonium product storage tanks to maintain high product purity. The corrosion of austenitic stainless steels by nitric acid–fluoride mixtures is well documented.[13] A typical 8 *M* HNO_3–0.05 *M* HF mixture[14] used to dissolve the insoluble PuO_2 residue remaining after a

primary dissolution in pure nitric acid corrodes 304L stainless steel at a rate of about 0.35 in./year at the boiling point[13] and corrodes titanium at a rate of about 0.2 in./year.[15] Titanium had an erratic corrosion rate due to periodic corrosion-product film separation from the base metal and would be unsuitable even for very low free, uncomplexed, fluoride concentrations. These rates for stainless steel and titanium vary with acid concentration but are of such magnitude for useful dissolvent compositions that the corrosion rates are unacceptable for commercial fuel reprocessing plants. Various other iron and nickel-based alloys have been studied for this application.[16] The best of these alloys, Corronel 230, a nickel-base alloy, corrodes at a rate of about 0.02 in./year, but is subject to preferential attack of welds. Only tantalum has a low corrosion rate (about 1 mil/year).[15] Embrittlement of tantalum by hydrogen from solution radiolysis is a potential but unexplored problem. Hydrogen pickup was observed in laboratory investigations of metallic fuel dissolution in tantalum, therefore there is concern for radiolysis hydrogen pickup. Fabricating a large complex primary dissolver of the NFS or AGNS type (Appendix A) of solid tantalum, or as a tantalum-lined vessel, is beyond the capability of the refractory metal production and fabrication industry. A very small tantalum-lined vessel having a much simpler shape might be practical, depending on the resolution of the possible hydrogen embrittlement problem for treating PuO_2 residue separated from the primary dissolver effluent. Vapor lines, condensers, and the condensate return system for the dissolver would have to be constructed of fluoride-resistant material because of the volatilization of hydrogen fluoride from the dissolvent. Fluoride complexing reagents such as aluminum nitrate to reduce dissolver corrosion to permit dissolution in a stainless steel vessel, as was done for the Thorex process, cannot be used during PuO_2 dissolution, since the complexed fluoride is completely ineffective for PuO_2 dissolution.[17]

4.2.2 Excessive fluoride consumption by materials other than PuO_2 in the fuel

The dissolution of uranium, plutonium, zirconium, and rare-earth fission products reduces the amount of free fluoride in solution, reduces

the corrosion of the solution, and reduces the ability to dissolve PuO_2. Additional fluoride over the minimum amount that would be required to dissolve the PuO_2 will have to be added to ensure complete PuO_2 dissolution. For example, fission product zirconium complexes two moles of fluoride per mole of zirconium, and this complex will have to be satisfied before PuO_2 dissolution can proceed. In the case of LWR plutonium recycle fuels, the Zircaloy cladding will be rapidly attacked by the fluoride if it is used in the primary dissolver. Considerable cladding will be dissolved and the fluoride consumption will be high compared with the amount of fluoride needed for PuO_2 dissolution. If fluoride is used in a secondary dissolver, very small fragments of cladding generated by the shearing process for either LWR or LMFBR fuels will be carried into the secondary dissolver along with PuO_2 and other solids. These small fragments of cladding are likely to dissolve, increasing the fluoride requirement slightly more than the amount necessary for PuO_2 dissolution.

For LMFBR fuels, hot-cell experiments have shown that up to about 36% of the irradiated stainless steel cladding may be dissolved by 8 *M* HNO_3–0.05 *M* HF solution,[18,19] whereas contact with 8 *M* HNO_3 dissolves only a few percent at most. Fluoride in the initial LMFBR fuel dissolvent will dissolve a substantial amount of caldding with the following adverse effects: (1) The high iron and chromium content of the acidic high-activity-level waste solution from LMFBR fuel will accelerate corrosion of the stainless steel waste storage tank.[20] (2) The dissolved cladding will increase the total solids content of the high-level waste (35% LMFBR cladding dissolution results in a 4.4-fold increase in total solids in the high-level waste over what would be included if only fission products were present). This may limit the concentration of high-level liquid waste for interim storage, thus requiring more high-level liquid waste storage tanks and a resulting larger volume of solidified high-level waste that must go to ultimate storage. This problem may not be as serious as it seems since some dilution of the high-level solidified waste with inert solids may be necessary to reduce specific heat generation rates to acceptable values, especially if immediate solidification of the high-level waste is done without interim storage. Nevertheless,

the presence of dissolved cladding is a potentially serious constraint for high-level liquid waste interim storage, solidification, and final disposal.

4.2.3 Solvent extraction and waste evaporator system corrosion

After dissolution of the PuO_2, the fluoride must be complexed with either aluminum or zirconium nitrate to reduce the corrosion of the process equipment and to break the relatively weak fluoride complex of plutonium so that it can be recovered by solvent extraction. Corrosion of a thoroughly complexed solution at low temperatures is only slightly greater than for a similar fluoride-free solution.[13] Waste concentration and acid recovery volatilizes fluoride causing high vapor-recovery-system corrosion rates. Higher concentrations of the fluoride complexing agents can reduce but not entirely eliminate the fluoride corrosion problem. Operating at reduced pressure to lower the temperature will also reduce the corrosion problem.[13] An aluminum nitrate scrub of the high-level waste evaporator vapor was used in one case to prevent carry-over of vaporized fluoride into the acid recovery system.[2]

4.2.4 High-level waste storage, calcining, and glass-making-systems corrosion

Ample experience exists at the Idaho Chemical Processing Plant to indicate that thorough complexing of fluoride in stored acidic high-level waste will reduce the corrosion of the stainless steel tanks (for low temperature storage) to acceptable levels.[13] Large additional amounts of fluoride complexing materials, principally calcium, are added to the waste immediately before calcining in a fluidized bed to repress fluoride volatilization and thus reduce calciner and off-gas scrubber corrosion. A large volume of high-fluoride-content waste has been successfully calcined. Moderate-to-severe corrosion problems have nevertheless been experienced in the vapor and off-gas scrubber system, even though a large excess of aluminum nitrate is present in the scrubber to complex the fluorides scrubbed from the calciner off-gas. Internal attack or

"roughening" of the calciner shell is believed to be due to the presence of the fluorides, although some investigators think the observed attack may be caused by carburization from in-bed fuel combustion followed by corrosion of carburized areas by decontamination chemicals.[21]

Calcined waste (simulated) containing fluorides has only recently been converted into glass, at least in the U.S. program for pilot-plant-scale waste solidification.[22,23] Since ordinary commercial glass includes fluoride as a constituent, it is thought that the commercial techniques for coping with fluoride emissions from the glass melting process can be used if it becomes necessary to consider glass making with fluoride-bearing high-level wastes.[22] This may not be easy, as indicated by the following: "Fluoride is retained with difficulty (by using calcium) during solidified waste processing up to temperatures of about 600°C, is nearly impossible to retain significantly at higher temperatues."[24] Temperatures of about 1000°C are necessary for the conversion of the calcined solids to a high quality glass. Very recent information[23] indicates that the addition of 1% fluoride to a waste glass melt increased the corrosion of type 304L stainless steel (the waste glass disposal canister material) at 1050°C (the processing temperature for the in-can melting process) by a factor of 8. No corrosion information was given for the associated calcining and off-gas system. Fluoride corrosion is a significant development problem for the waste solidification program that must be considered for fluoride-bearing wastes produced in the past and for future wastes, if fluorides continue to be used in reprocessing.

4.2.5 Failed equipment disposal

Another corrosion-related problem associated with the use of fluorides is the probably more frequent necessity for disposing of large pieces of failed process equipment. Future regulatory requirements will not permit this equipment to be dumped in a hole in the ground next to the plant and then be covered up as has been done in the past. As a matter of course, facilities for reducing failed equipment to an acceptable form for disposal in a Federal Repository will be required for any new plant.

However, failed equipment disposal and replacement costs, plus plant downtime costs, can be expected to be a significantly larger part of the operating costs if fluorides are used.

4.3 Nuclear Criticality Problems for Reprocessing Fuels Containing Insoluble PuO_2

If insoluble PuO_2 is present in the fuel and fluorides are not used to dissolve the PuO_2, then the possibility exists for an accumulation of a substantial quantity of undissolved PuO_2 in the dissolver and subsequent head-end equipment, in the first solvent extraction contactor, in the high-level waste collection and concentration system, and in the high-level radioactive-waste storage tanks. If the insoluble PuO_2 is collected and then dissolved in a secondary dissolver with fluorides, the accumulation problem will be present to the point where the PuO_2 is solubilized. The fact that the fuel contains insoluble PuO_2 and that the exact amount of PuO_2 in the fuel and the amount washed away from the cladding is probably poorly defined introduces an additional criticality problem in the design and operation of the plant that would otherwise not be present. Fuel irradiation can reduce the amount of insoluble plutonium in a poorly made fuel; however, it would be unwise to assume that irradiation would always eliminate the insoluble PuO_2 so that accumulation does not occur in the plant.

From data calculated for cadmium-poisoned systems,[25] it is inferred that about 16 kg of PuO_2 would be required for criticality at optimum geometry (18-cm-diam sphere) and moderation in a process vessel containing either water or dissolved fuel (at a heavy metal concentration of up to 300 g/liter), both poisoned with 0.3 *M* boron or its nuclear equivalent.*

---

*A soluble nuclear poison (boron, cadmium, gadolinium, etc.) is assumed to be present in the dissolvent and in all solutions used thereafter in the head-end process to enable safe handling of greater-than-minimum critical concentrations of dissolved plutonium in large equipment. It is an acceptable criticality control method. Operations having the potential for the accumulation of large amounts of PuO_2, such as centrifugation to clarify the feed solution, would require geometrically safe equipment or the means to detect accumulation of PuO_2 and would have to take appropriate action before an incident occurs.

The infinite slab minimum critical thickness is about 6 cm. The critical amount of PuO_2, about 16 kg, corresponds to 2% of the PuO_2 in 8 tons of LMFBR fuel. For LWR plutonium recycle fuel, about 45 tons of fuel would be required to yield 16 kg of insoluble plutonium if 2% of the plutonium in the spent fuel is insoluble. Thus, large reprocessing plants with a capacity of about 5 tons of fuel per day could accumulate potentially critical amounts of PuO_2 in a relatively short time. Instrumentation for direct determination of PuO_2 accumulation in the equipment containing highly active process solutions does not exist. Indirect means for determining accumulations of PuO_2, which are based on monitoring for the characteristic high-energy gamma radiation of the fission product ^{144}Pr that might accompany PuO_2, may be possible. There is some possibility that direct PuO_2 buildup monitoring instrumentation based on neutron counting or other techniques can be developed, although applying this instrumentation to all potential PuO_2 accumulation points could be awkward.[26]

Dissolving tests[27] with unirradiated FFTF fuel-vendor mechanically blended pellets gave PuO_2 residues that were very fine; most particles were $\leqslant$10 μm, with a few particles larger than 50 μm. For pellets made by coprecipitation, the particles were very large, up to 200 to 500 μm in length. The particles represented approximately 1.7% and 0.8%, respectively, of the initial plutonium in the two types of pellets. The dissolution residues might be representative of the residues that might be found in poor quality LMFBR or LWR PuO_2 fuels. Note that the residues might have been acceptable under former LWR PuO_2 recycle fuel standards, and, if a small reduction were made in the size of the largest particles, the residues might be acceptable under the proposed ASTM standard for recycle fuel pellets. The amount and particle size of the residue would have been smaller by an unknown amount if the same fuels had been irradiated. However, the dissolving test conditions (12 *M* HNO_3, 12 hr, boiling) were considerably more stringent than is likely to be used in a plant where $\leqslant$8 *M* HNO_3 is apt to be used for a very few hours of total exposure. The rapid dissolution of the bulk of the fuel in either a continuous or a batch dissolver means, practically speaking, that the

dissolvent for the PuO_2 residue is the low acidity, high heavy-metal-content product solution. The dissolution rate for pure PuO_2 in dissolver product solution is about 800 times slower than in boiling 12 *M* HNO_3 (Ref. 17) (Table 3.1). Nevertheless, the dissolution rate in 12 *M* HNO_3 is so small (0.2 μm penetration per hour) that there is no possibility of dissolving even 10-μm PuO_2 particles in 12 *M* HNO_3 in a reasonable time. The FFTF pellets previously mentioned would have had a much larger amount of undissolved residue with much larger particle sizes if the dissolution tests had been made using realistic reprocessing plant dissolution conditions. Experimental data to characterize the residue under "plant dissolution conditions" for irradiated, poorly homogenized fuel are not available.

PuO_2 particles smaller than about 50 μm can be relatively easily suspended by the mild agitation typical of sparged process vessels. Nevertheless, the possibility exists for the accumulation of a critical quantity of PuO_2 in the system unless very careful equipment design and operating methods are used. An unfortunate recent incident illustrates the problem of handling solutions containing suspended solids. An inadvertent accumulation of heat-emitting noble metal fission product solids by settling in a process vessel ignited solvent and caused some personnel radiation exposure and an extended shutdown of the Windscale Plant.[28] The particle size, typically 3 to 8 μm or smaller,[14] and settling velocity of the metallic fission product residue is smaller than for the larger PuO_2 residue particles; therefore PuO_2 particles would have had a greater tendency to settle out if they had been present.

The most obvious place for the accumulation of a large amount of insoluble PuO_2 is the high-level waste storage tank. The high-level waste tanks being installed at the Barnwell Nuclear Fuels Plant will each hold 300,000 gal of acidic waste. They are cooled and provided with elaborate air-sparger and pulsed-liquid jet agitation systems to suspend solids and to promote better cooling.[29] If we assume that LMFBR high-level waste is stored in a similar high integrity tank at a concentration of 150 gal/ton of fuel, the tank could contain as much as 4200 kg of insoluble plutonium (2% insoluble). The total amount of insoluble

plutonium is based on the assumption that all the insoluble PuO_2 would leave the cladding. The total would also include soluble plutonium losses from the solvent extraction system. This amount of insoluble PuO_2 (2%) may be an excessively high assumption. However, even if it is reduced by a factor of 4 to about 0.5% insoluble PuO_2, the accumulation of about 1000 kg of PuO_2 in the tank would still be of concern. If 4200 kg of PuO_2 is kept uniformly suspended in the poisoned solution, the concentration would be only 3.7 g of plutonium per liter, which is very safe. Uniform settling of the PuO_2 on the tank bottom ($\sim$2 g of plutonium per square centimeter) does not seem to be a criticality problem.[30,31] Failure of one or more of the agitation devices or imperfect design and testing of the tank so that a stagnant area is present in the otherwise well-stirred tank could result in the local accumulation of a thick pile of sludge on the tank bottom.[32] At a hydrogen-to-fissile-plutonium atomic ratio of 10 in the sludge, which might be attained in a co-settled cake of PuO_2 and fission product solids found in acidic waste, the minimum critical sphere radius is about 18 cm and the critical mass is about 38 kg of plutonium; the infinite slab critical thickness is about 14 cm.[25] These estimates are actually for nominally reflected mixtures of PuO_2 and 300 g of uranium and plutonium per liter of solution containing 0.4 *M* cadmium as a nuclear poison and are cited only as an approximation of the conditions for criticality in a slurry of PuO_2 and fission products. The key question is whether selective sedimentation can occur in the tanks so that PuO_2, which is a minor constituent of the total amount of insoluble solids in the tank, can collect in piles. Experimental information to answer this question is not available.

Regulatory agencies will have to be convinced that selective accumulation of enough PuO_2 to achieve criticality cannot occur during the lifetime of the plant, or that a criticality incident, if it occurs, will not decrease the integrity of the high-level waste storage tank (or any other process vessel in the plant) or result in significant exposure to plant personnel and the public. The onset of criticality due to solids settling is likely to be a slow excursion with a very low reactivity addition rate so that the assembly will be self-disruptive with only

local heating and gas release[33] that agitates the solids and solution.* The cycle may be repeated if the mechanism that resulted in the accumulation of a critical mass remains operative. For example, repeated accidental criticality occurred in a large waste storage tank because of the inadvertent addition of highly enriched uranium solution to a small amount of liquid in the tank, which did not damage the vessel.[34] It is likely that sludge layer criticality in the bottom of a deep waste tank or in any process vessel in the plant would be trivial insofar as tank damage is concerned. However, regulatory agency reactions to <u>any</u> criticality incident are not likely to be trivial.

Although not considered in detail, it also appears that the fissile material accountability and safeguard-related issues affecting fuel reprocessing (i.e., the precise knowledge of how much plutonium is in the plant and where it is located) are much better resolved if insoluble PuO_2 is not in the fuel. It appears to be essentially impossible to get representative samples of plant fluids if they contain slurries of PuO_2.

4.4 Additional Head-End Equipment and Effects on High-Level Liquid and Solidified Wastes When Insoluble PuO_2 is Recovered by Fluoride Treatment

A description of existing dissolvers and feed preparation systems for the NFS, Midwest Fuel Recovery (MFR), and AGNS plants and their limitations for processing insoluble fuels is in Appendix A. Also included in this Appendix is a description of a conceptual rotary dissolver for LWR and LMFBR fuels that, if successfully developed, should result in much lower leached cladding losses than can be obtained in conventional dissolvers. The rotary dissolver also appears to have the unique capability of being able to separate finely divided particles of insoluble PuO_2 from the leached hulls, thus permitting a secondary dissolver treatment of the PuO_2 solids with minimum amounts of fluoride

---

*Solids accumulation has other serious problems, including the development of hot spots on the tank bottom causing accelerated corrosion and buckling of the tank bottom, and sudden, violent tank boiling when the thermally hot sludge and liquid in the waste tank is disturbed.

to obtain complete dissolution. This information has been used to prepare schematic equipment diagrams and to make flowsheet comparisons to qualitatively compare the reprocessing plant operations and equipment for processing soluble fuel with that required for the recovery of plutonium in insoluble fuel.

Case I for soluble fuel is similar to the AGNS dissolution and feed preparation system and is the reference minimum equipment system (Fig. 4.1) for comparison with Cases II and III (Figs. 4.2 and 4.3, respectively), which are designed to accept fuel containing insoluble plutonium and to recover the PuO_2 by using fluoride for dissolution. Case I would be directly applicable to LMFBR fuel by using soluble nuclear poisons (as is already planned with LWR fuel at AGNS) and perhaps decreasing the diameter of the leacher basket from 24 in. to about 18 in., depending on a thorough criticality analysis. If fuel containing insoluble PuO_2 is processed in this sytem, 80% or more of the insoluble PuO_2 would remain in the leached cladding (Appendix B). The insoluble PuO_2 could be removed only by including fluoride in the dissolvent. This process would dissolve large amounts of stainless steel LMFBR or Zircaloy LWR cladding, consume very large amounts of fluoride, and would subject the dissolver to severe corrosion. The use of fluoride in the primary dissolver is not considered a viable option for this typical design for a reprocessing plant and will receive no further consideration. If a rotary dissolver (Appendix A) is substituted for the AGNS dissolver, cladding leaching losses might be reduced by one or two orders of magnitude to as low as $\leq$0.001% due to complete leaching and efficient countercurrent rinsing of the discharged cladding and by separation of all PuO_2 solids (if present) from the cladding. Centrifugation of the feed is optional as noted in Appendix A. The centrifuges depicted for all cases may have some limitations on the amount of solids they can accumulate before discharging due to fission product heating in the cake. This situation may require more centrifuges operating in parallel for each application than the minimum number necessary to guarantee high on-stream availability.

Case II for the recovery of fuel containing insoluble PuO_2 requires a rotary dissolver to wash the PuO_2 away from the cladding and a minimum

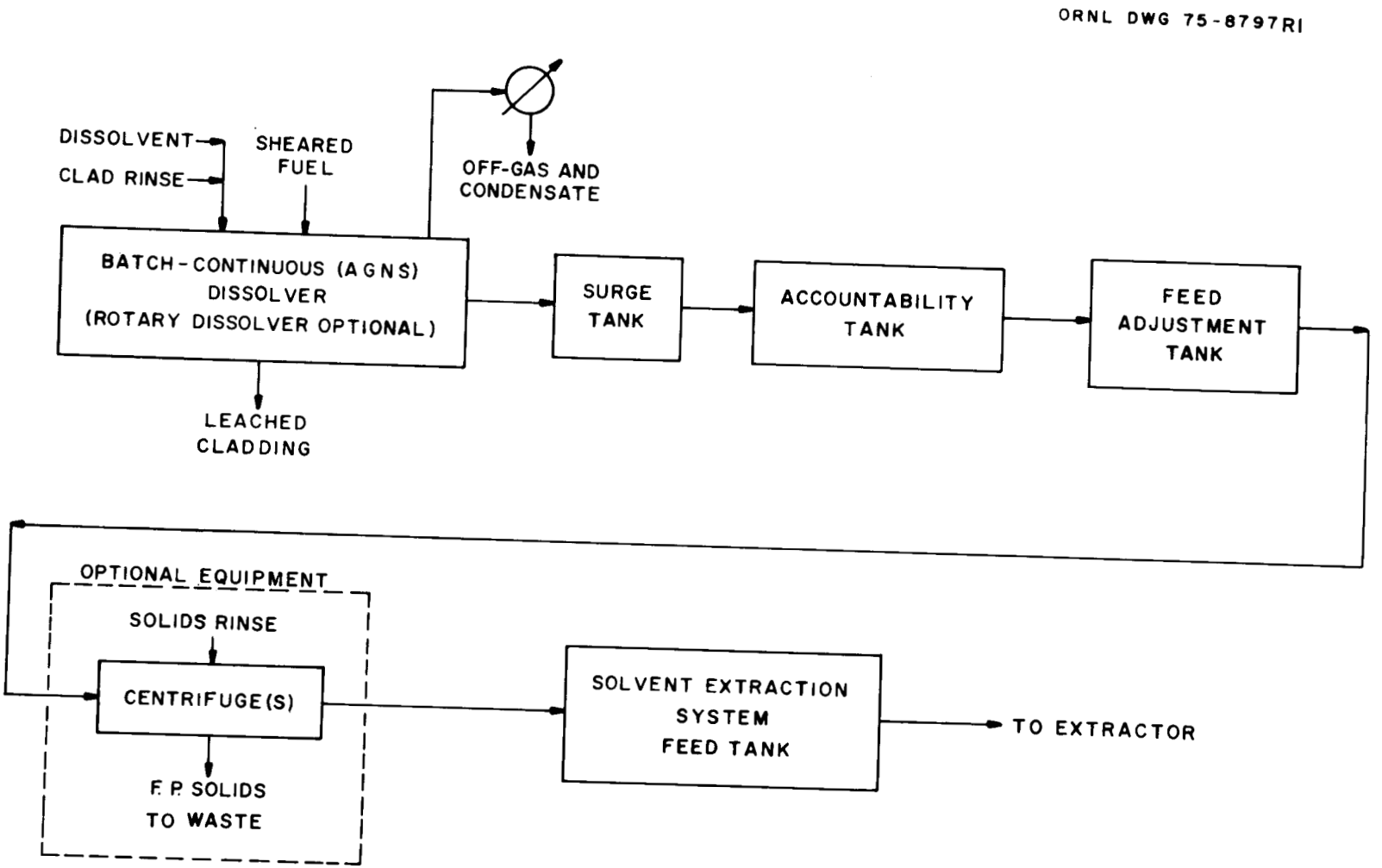

Fig. 4.1. Case I. Dissolution and feed preparation for soluble fuel.

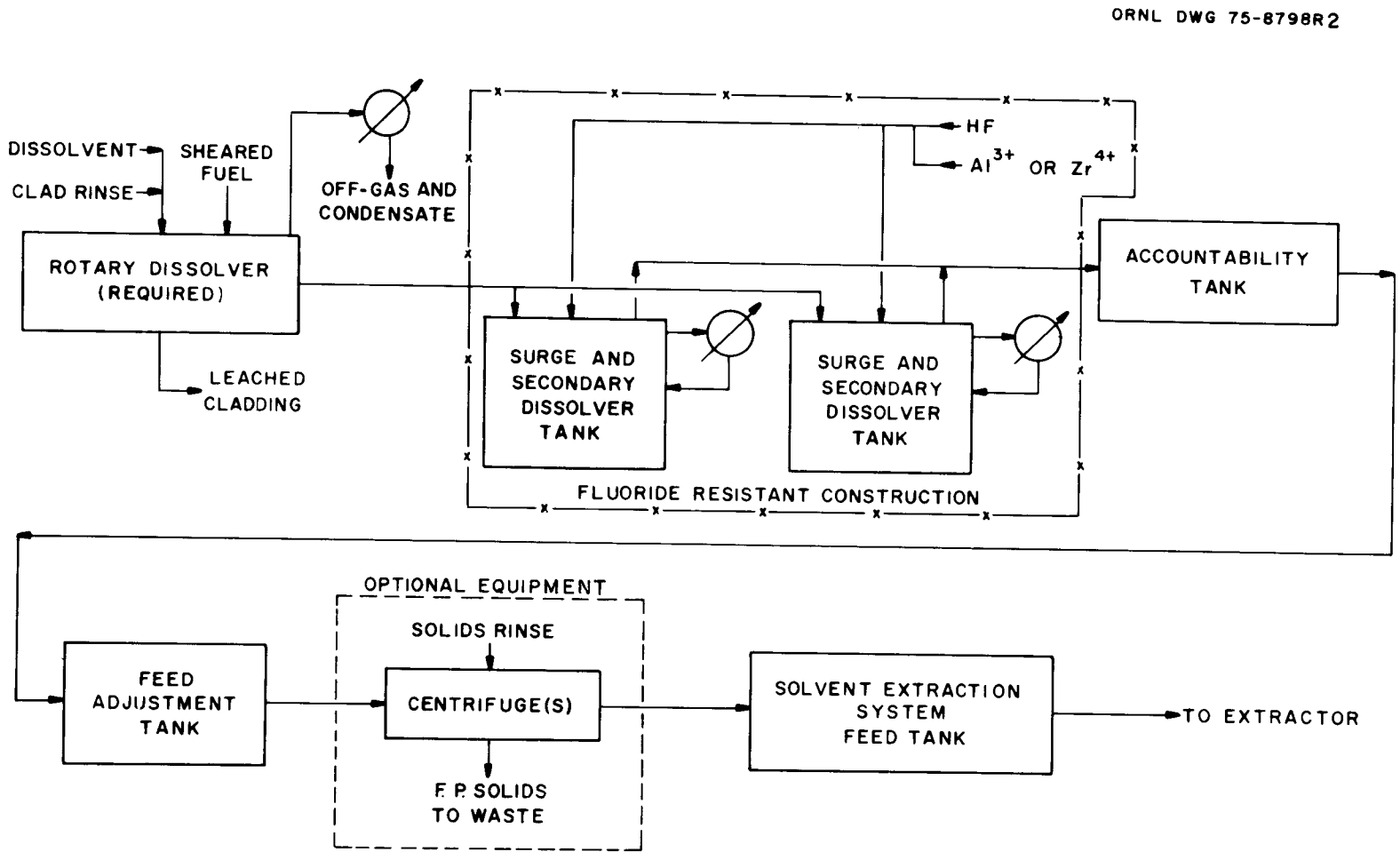

Fig. 4.2. Case II. Dissolution and feed preparation for fuel containing insoluble PuO_2 — high fluoride consumption flowsheet.

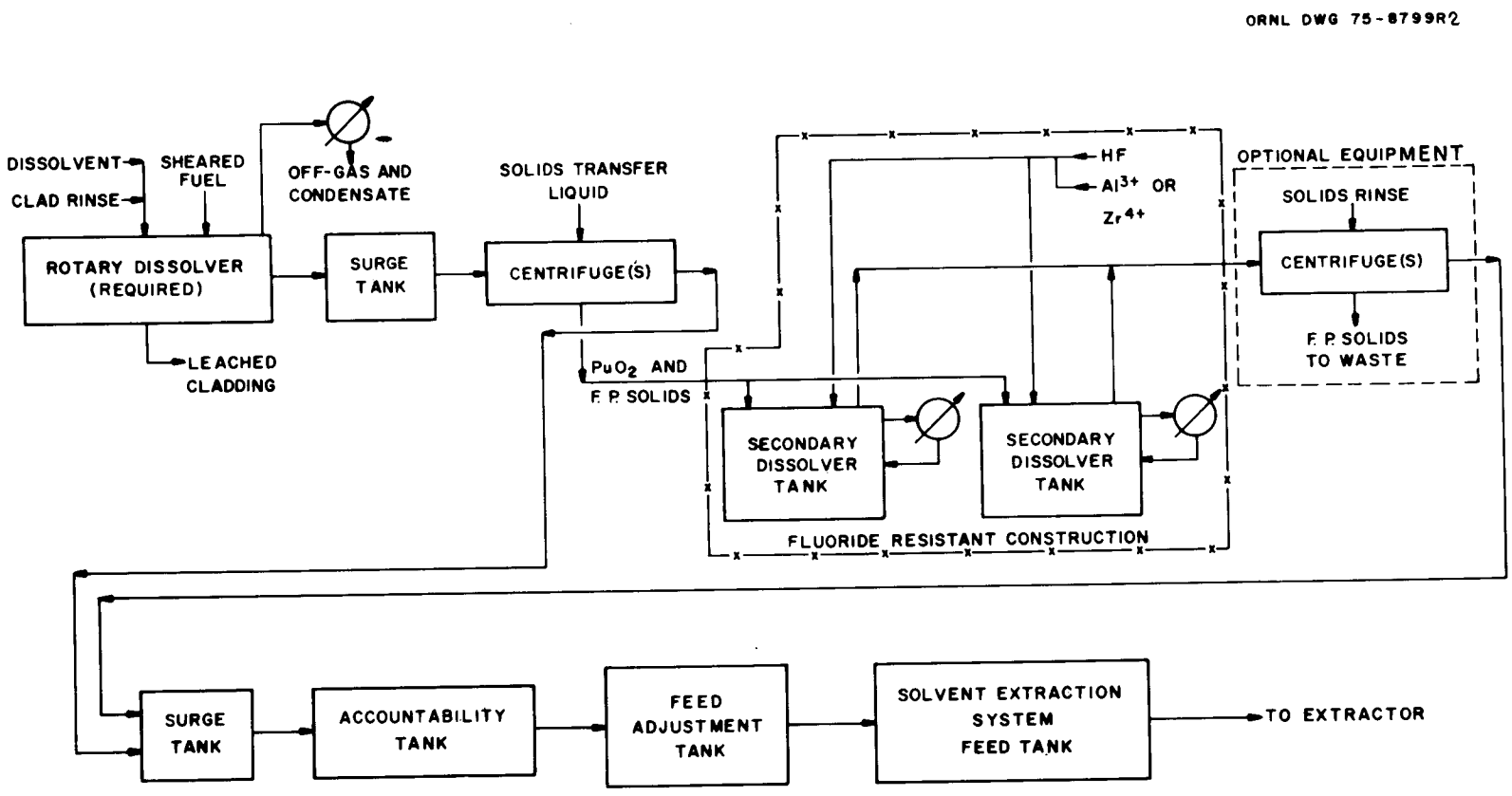

Fig. 4.3. Case III. Dissolution and feed preparation for fuel containing insoluble PuO_2 — low fluoride consumption flowsheet.

of two large fluoride-resistant (tantalum-lined) surge and secondary-dissolver tanks. Fluoride would be added continuously to each tank as it is filled with hot dissolver product to effect rapid dissolution of the incoming PuO_2; consequently, no appreciable accumulations of PuO_2 will occur in the large-diameter surge-dissolver vessels. After completing the filling and secondary dissolution, Al^{3+} or Zr^{4+} is added to complex the fluoride to permit extraction of the plutonium and to minimize corrosion of the process equipment. The complexed product solution may be centrifuged if clarified feed is required for the extraction system. It is assumed that reflux condenser condensate can be returned directly to the surge-secondary dissolvers, thus confining fluoride to the secondary-dissolver system. The fluoride consumption for processing LMFBR fuel containing 2% insoluble plutonium[11] is estimated as follows: PuF^{3+} and ZrF_2^{2+} (the zirconium is from fission) complex formation plus 0.05 *M* free fluoride in solution after completing the dissolution in the secondary dissolver to ensure rapid dissolution of the last traces of PuO_2. Additional flowsheet material balance data were taken from Ref. 11. No allowance is made for the fluoride that may be required to saturate the complexes of Fe^{4+} (from clad corrosion) or fission products, such as cerium, so that fluoride is available for PuO_2 dissolution. The actual fluoride requirements will therefore be larger than those assumed for discussion purposes. Complexing agent consumption is estimated for a minimum molar ratio of 2 aluminum:fluoride (usually a ratio of $\geqslant 3$ is used) for the free fluoride and PuF^{3+} complex, plus an additional 20% to allow for $Al(NO_3)_3$ scrubbing of high-level waste concentrator vapors to prevent fluoride carryover to the acid fractionator system.[2] It is assumed that waste calcination prior to glass making will require the addition of calcium at a mole ratio of calcium:1.5 fluoride to retain most of the fluoride in the calcine, as is done at the Idaho Chemical Processing Plant when calcining high-fluoride-content wastes. The fluoride and complexing agent requirements plus the effects on high-level liquid and calcined wastes are summarized in Table 4.1. The presence of large amounts of aluminum, fluoride, and calcium in the calcined high-level waste solids is likely to affect the process for converting calcined

Table 4.1. Fluoride, complexing agent consumption, and high-level waste (HLW) effects for LMFBR fuel containing 2% insoluble PuO_2

	Fluoride per ton (kg)	Aluminum per ton (kg)	Aluminum in HLW at 150 gal/ton[a]	Solids in HLW[b]	Calcium added to calciner feed (kg/ton)	Solids in calcined waste[c]
Case II: High fluoride flowsheet	11	37.6	2.9 *M*[d]	132% more	15.5	175% more
Case III: Low fluoride flowsheet	0.6	1.7	0.13 *M*	6% more	0.8	8% more

[a]Typical design volume for the storage of concentrated, acidic, high-level waste in cooled stainless steel tanks.

[b]Aluminum plus fluoride compared with all the fission products as elements.

[c]Aluminum plus fluoride and calcium compared with all the fission products as elements.

[d]Solution would have to be diluted to avoid precipitation of $Al(NO_3)_3$ crystals. Stable solution would require a more dilute high-level waste, thus increasing interim high-level-waste storage tank costs.

solids to a glass. A much larger volume of high-level waste glass is likely in order to incorporate these additional solids and still maintain a reasonable glass melting point and pour-point characteristics, along with low leachability. LWR PuO_2 recycle fuel containing 2% insoluble PuO_2 would require about 40% as much fluoride as LMFBR fuel, in spite of the much lower plutonium content. This requirement is because fission product zirconium is present in about the same amount; therefore, an excess of fluoride is also required at the endpoint of the PuO_2 solids dissolution for rapid and complete dissolution.

Case III for the recovery of fuel containing insoluble PuO_2 requires a rotary dissolver to wash the PuO_2 away from the cladding. This case also requires one or more centrifuges to separate the PuO_2 (and fission product) solids from the dissolver product. The solids are transferred to one of two or more small, geometrically safe fluoride-resistant (tantalum-lined) secondary-dissolution tanks. The fluoride and complexing agent consumption is based on the same assumptions as those for Case II. The complexed product solution may be centrifuged again if clarified feed is required for the extraction system. The chemical consumption and waste effects are given in Table 4.1. The considerably reduced fluoride consumption for Case III results from having to provide fluoride to complex only 2% of the plutonium instead of all of the plutonium as for Case II; a much smaller volume of the secondary-dissolver solution is also required. LWR fuel containing 2% insoluble plutonium would require about 75% as much fluoride as the LMFBR fuel because fission product zirconium is a large fluoride consumer.

Case II has the simplest and probably the most reliable equipment system for coping with insoluble PuO_2, but compared with Case III, Case II has an intolerably high aluminum concentration (near the saturation concentration at room temperature) in LMFBR high-level waste. The high-level waste would have to be diluted to more than 150 gal/ton of fuel to prevent crystallization of aluminum nitrate on the tank cooling coils. This dilution would increase in high-level-waste volume and in storage-tank costs. The increase in the total amount of calcined waste solids requiring conversion to a high-level waste glass, compared with Case II,

is prohibitive for LMFBR fuel. These extras will be only slightly smaller for LWR PuO_2 recycle fuel.

Case III has a much smaller impact on HLW solids and is the preferred method for the complete recovery of plutonium in both LWR and LMFBR fuels containing insoluble PuO_2. Comparing Case III with Case I, it is obvious that a more complicated head-end system is required to cope with fuels containing insoluble PuO_2 and fluoride, which is unacceptable to reprocessors.

4.5 Effect of Plutonium Losses on the Long-Term Toxicity of High-Level Waste and Leached Cladding

Plutonium will contribute to the long-term ($\geqslant$1000 years of decay time) toxicity of high-level waste. Some loss of plutonium is unavoidable in reprocessing; however, this loss can be kept small by using technology now available (Sect. 6). Thus, any additional amount of plutonium introduced into waste as a result of not recovering insoluble PuO_2 in the fuel may increase long-term toxicity.

The stability of geologic structures proposed for waste disposal can be predicted for several hundred thousand years; however, some doubt exists that this reliability can be assumed for the extremely long times necessary for the actinides to decay to relatively harmless levels. Efficient removal of the actinides from the waste prior to disposal might decrease the potential long-term impact of the high-level waste on the environment or on the "stumbler" who somehow manages to dig hundreds of feet down into the earth and ingest large amounts of waste.[35] Safe disposal of these separated actinides and the effect of actinide removal processes on reprocessing plant complexity, costs, and radioactive waste proliferation from transuranic and long half-life fission-product recycle into reactors are usually conveniently ignored in proposals for "denaturing" wastes and therefore will not be considered in this report. Various suggestions have been made for what might constitute an acceptable radioactivity hazard level for the waste after long decay. One possible criterion is that the radioactivity hazard of long-decay waste should be equal or less than the hazard of natural

radioactive sources such as pitchblende (∿70% uranium) or carnotite (0.2% uranium) ores. Claiborne[36] and Bond and Leuze[37] have calculated hazard index values* for reprocessing plant wastes as an approximate means of comparing the relative radiological toxicity of the various waste components and the effect of partitioning these components from the wastes on long-term toxicity. Plutonium and americium-curium are the most important contributors to long-term waste toxicity, although neptunium becomes increasingly important after about 10,000 years. The contribution of various isotopes to total toxicity changes with time in a complex manner. This discussion will be limited to 1000 years' decay. Table 4.2 presents in a condensed form the amounts of water necessary to dilute the specified amounts of material to radiation control guide (RCG) values after 1000 years' decay. The entry for pitchblende represents the upper limit for naturally radioactive minerals, although long-term waste disposal "denaturing" requirements, if adopted, might specify a more stringent, less radioactive standard such as carnotite (0.2% uranium).

Table 4.2 shows that the amount of water to dilute plutonium-free, solidified high-level wastes considerably exceeds the amount of water to dilute an equal volume of pitchblende. If waste partitioning is not required to reduce the long-term hazard of the waste, a total plutonium loss of about 1.5% to LWR plutonium recycle waste and about 0.5% to LMFBR waste would increase the toxicity index of the plutonium-free high-level waste by only a small amount (about 10%). In the following, it is assumed that insoluble PuO_2 is in the fuel and is not dissolved.

Preliminary experimental work (Appendix B) indicates that ≤20% of the insoluble PuO_2 may be washed away from the cladding in conventional (NFS, AGNS) dissolvers. Undissolved fuel losses to the cladding were about 0.1% at NFS for LWR fuels and would be about the same for LMFBR

---

*The hazard index is defined as the volume of water required to dilute a unit volume of radionuclide mixture to the levels defined in the Code of Federal Regulations (10 CFR Part 20) as the maximum permissible concentration for the unrestricted use of the water. It is only an approximate risk comparison suitable for limited applications since it does not allow for migration or accumulation in the environmental media. The name "hazard index" was recently changed to "toxicity index."

Table 4.2. Hazard index for reprocessing wastes after 1000 years' decay

Fuel	Plutonium-free waste[a]	Plutonium-free waste with 99% americium-curium removal[a]	Plutonium losses of —		Uranium 70% pitchblende (70%)
			0.1%	1%[b]	
LWR plutonium recycle fuel, high-level solidified waste (2 ft^3/ton)	1.9×10^9	2.2×10^7	7.4×10^5	7.4×10^6	10^8
LMFBR fuel, high-level solidified waste (3 ft^3/ton)	1.0×10^9	1.3×10^7	2.0×10^6	2.0×10^7	10^8

[a]Assumes that 99.9% of iodine and all noble gases have been removed during reprocessing.

[b]Approximate past solvent extraction system performance for LWR fuels.

fuel dissolution in a similar-type dissolver. Solvent extraction losses were about 1%. For LWR plutonium recycle fuel, the "acceptable" high-level waste contribution by insoluble PuO_2 could be no more than 1.5 − 1% extraction loss, which is equal to 0.5%. The total amount of insoluble PuO_2 in the fuel could be about 0.5% divided by 0.2, which is equal to 2.5%. The cladding would retain 0.1% of the plutonium because of imperfect leaching, in addition to ≥2% of the plutonium due to the retention of ≥80% of the insoluble plutonium. Other actinides plus fission products would accompany the leaching losses and insoluble PuO_2 in proportion to the retained plutonium. Cladding neutron activation products are also present but are generally minor contributors to long-term toxicity. The cladding would be a high-level waste by current and probably unrealistic definitions,[35] whose toxicity has been increased about 20-fold by the presence of the insoluble PuO_2. This is undesirable.

The "acceptable" total plutonium loss limit of 0.5% for LMFBR fuels could not be obtained unless an improvement is made in solvent extraction performance. This improvement appears to be possible (Sect. 6) to the point that the solvent extraction system loss would be about 0.4%, leaving a maximum of about a 0.1% loss "allowable" for insoluble PuO_2. This ≤0.1% insoluble PuO_2 loss to the cladding translates into a total of about 0.5% insoluble PuO_2 in the irradiated fuel. Again, ≥0.8 of the 0.5% insoluble PuO_2 (≥0.4%) would go to the cladding, increasing its long-term toxicity by at least a factor of 4 due to the presence of insoluble PuO_2.

Work under way at ORNL suggests that an improved rotary-type dissolver can be developed that is capable of thoroughly leaching and rinsing the cladding. The dissolver may also be capable of separating any insoluble PuO_2 from the cladding (Appendix A and B). Plutonium losses to the cladding should be ≤0.001% for both LWR and LMFBR fuels (Sect. 6). LMFBR-leached cladding (13.5 ft^3/ton of fuel) after 1000 years' decay would then be only 0.05% as toxic as pitchblende on a toxicity index comparison basis. This difference in toxicity is based on the assumption that induced activity in the cladding is negligible after this decay period. The high-level waste and irradiated fuel

could tolerate no more than about 0.5% insoluble PuO_2 for LWR fuel and no more than about 0.1% insoluble PuO_2 for LMFBR fuel without increasing the total toxicity index of the waste by more than 10%, that is, if solvent extraction losses (noted above) are included.

Waste partitioning combined with efficient rotary dissolvers, with head-end feed clarification, and with improved solvent extraction systems could reduce the long-term (1000-year decay) hazard of both high-level and cladding wastes. Americium-curium removal would be the first candidate for partitioning from the waste. Let us assume that 99% americium-curium removal is arbitrarily defined to be as "low as practicable" and is attained. It is estimated that feed clarification and solvent extraction losses in future reprocessing plants could total $\leqslant$0.06% of the plutonium (Table 6.1). Partitioned LWR solidified high-level waste, including a 0.06% plutonium loss, would require about 1.7×10^6 m^3 of water per ton of fuel to dilute the waste to RCG; in other words, it is about three-tenths as hazardous as an equal volume (2 ft^3) of pitchblende ore. If the insoluble PuO_2 contribution to the hazard is not to cause a significant ($\geqslant$10%) increase in the waste toxicity, it should not exceed 0.02% in the irradiated fuel. Partitioned LMFBR solidified high-level waste, including the 0.06% "normal" plutonium loss would require about 2.2×10^6 m^3 of water per ton of fuel to dilute the waste. It is also about three-tenths as hazardous as an equal volume of pitchblende ore (3 ft^3). The insoluble PuO_2 contribution to the waste hazard should not exceed 0.01% in the fuel to avoid increasing the hazard of the waste by a significant amount (10%).

Secondary recovery of plutonium and removal of other actinides, if required to reduce the hazard of the waste, might be done after interim storage of high-level waste for $\leqslant$5 years just prior to waste solidification. This procedure would result in treating a lower activity level material than fresh high-level waste. Prolonged exposure of insoluble PuO_2 particles to optimum storage conditions for acidic high-level waste (1 to 2 *M* HNO_3, 50 to 60°C)[32,38] will not dissolve a significant amount of the PuO_2 particles ($\sim$0.01 μm penetration per year).[17] Thus, fluorides would be required to dissolve the PuO_2 if secondary recovery

is attempted after interim liquid storage. While this scheme might not expose the plant head-end and high-level waste storage tank system directly to fluorides, the fluoride could be recycled to the main plant via the acid recovered from the solidification process off-gas. The waste solidification process equipment itself would be subject to the same fluoride corrosion risk as for other dissolution schemes requiring the use of fluorides and would be equally objectionable to reprocessors. It would be more cost effective to improve the performance of the solvent extraction system and eliminate insoluble PuO_2 from the fuel so that total plutonium losses are "as low as practicable."

4.6 Effect of Plutonium Losses on Resource Utilization, Reactor Doubling Time, and Electricity Costs

Plutonium recycle for light-water reactors and development and commercialization of the LMFBR would result in maximum utilization of our fission energy resources. Plutonium and uranium losses from the fuel cycle, regardless of whether they occur in fuel processing or fuel fabrication, are detrimental to this objective. For example, decreasing the LMFBR fissile and fertile material fuel cycle total loss from 2% to 1% will increase the possible utilization of uranium resources from about 69% to about 82% at an assumed average burnup of 42,500 MWd/ton (Fig. 4.4). Over the likely range of interest, namely, 2% down to about 0.5% fuel cycle losses, each 0.1% reduction in fuel cycle loss increases the uranium resource utilization by roughly 1.3%. This simplified treatment considers only the total mass loss of heavy metal and is indifferent to whether the loss is uranium or plutonium. Uranium losses from solvent extraction are generally two- to tenfold less (on a percent basis) than plutonium losses, and the plutonium content of LMFBR fuel is relatively high. This differential in losses tends to make the total mass loss of potentially fissile material more sensitive to plutonium losses in the reprocessing part of the fuel cycle. However, the loss of plutonium, which might be experienced due to PuO_2 insolubility problems in the dissolution, will not have a major effect on overall resource utilization if high recovery of uranium is maintained, although

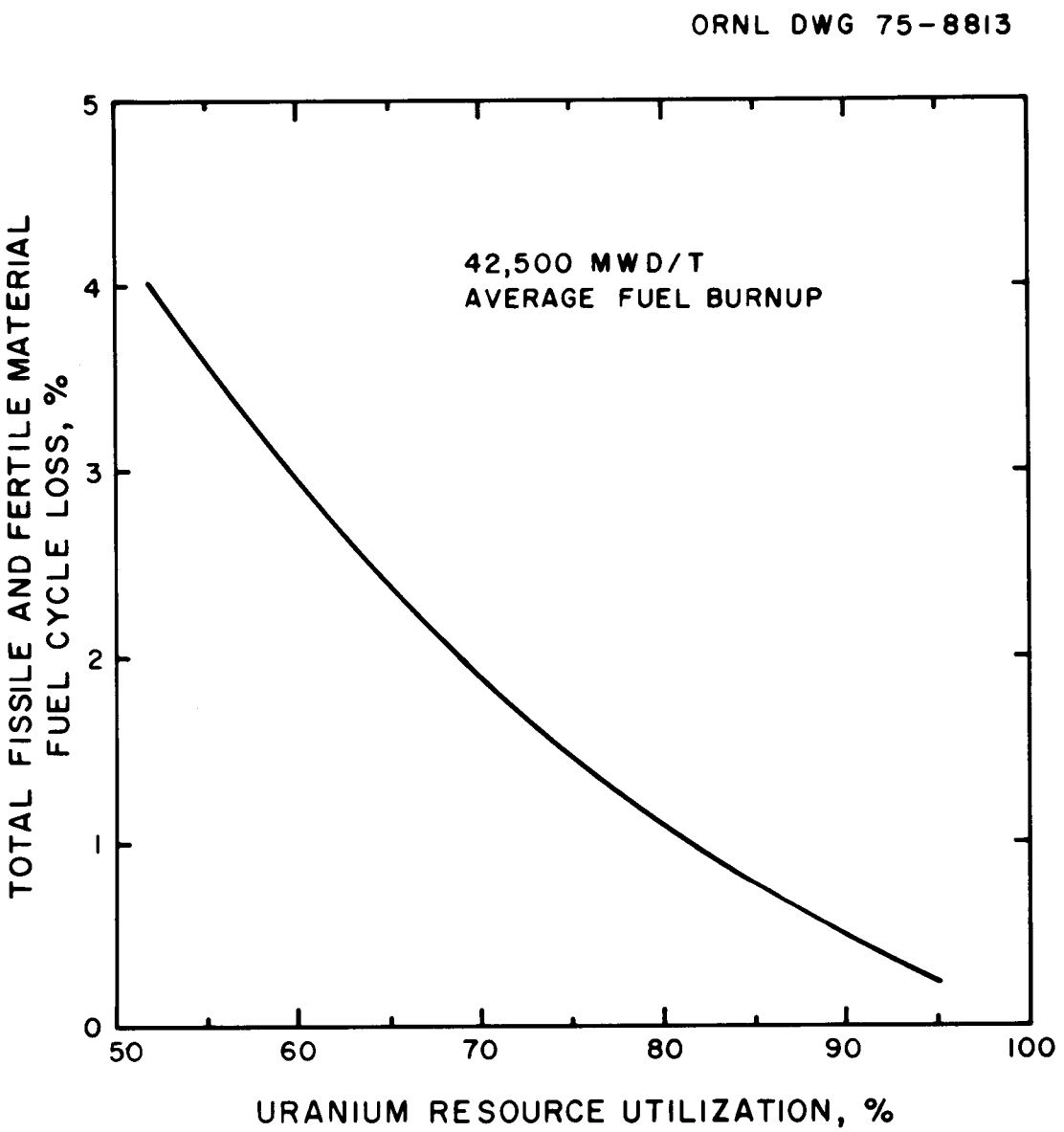

Fig. 4.4 Effect of total fuel cycle losses on uranium resource utilization in LMFBRs.

the dollar value of a heavy metal loss as plutonium rather than uranium would be substantial. Small plutonium losses such as those due to fuel insolubility should not be neglected since these losses represent a large resource loss in the long-term utilization of uranium and are preventable.

A short doubling time, that is, the time for the amount of fissile material to double, is one of the important characteristics of a good breeder. Plutonium losses affect the doubling time of the LMFBR system to a greater extent than the losses affect overall resource utilization. Table 4.3 presents calculated compound doubling times as a function of LMFBR fuel cycle plutonium losses for conservatively rated standard-oxide and advanced-oxide-fueled reactors. Carbide- or nitride-fueled breeder fuel cycle losses are completely unknown; therefore, doubling times for these fuels were not estimated. The standard-oxide-fueled reactor with a 1.5-year out-of-reactor reprocessing and fuel fabrication period has unattractively long doubling times at all loss fractions. Decreasing the plutonium loss from 2% to 1% decreases the doubling time about 40%. The advanced-oxide LMFBR doubling time decreases about 8% for the same reduction in plutonium loss for either a 1-1/2 year or a 1-year ex-reactor fuel turnaround. Shortening the out-of-reactor fuel turnaround by six months improves doubling time by about 11%. Even though the improvement in doubling time is small for small decreases in plutonium losses, this increase in doubling time is an additional benefit that can be gained by improvements in fuel cycle technology to eliminate preventable plutonium losses.

While the monetary value of the losses of plutonium from the fuel cycle is an insignificant part of the total cost of producing electricity, the dollar value of these losses may be very large. If the fuel value of plutonium is assumed to be $50/g, then each 0.1% reduction in plutonium losses due to fuel fabrication improvements (in a 5-ton/day LMFBR fuel fabrication plant) is worth about $25,000 per plant operating day, or about $5/kg of fuel manufactured. This saving could amortize an additional capital investment of $30 million (300 days/year, four-year amortization) in the fabrication plant at the break-even point to

Table 4.3 Effect of fuel cycle plutonium losses on LMFBR doubling time

LMFBR fuel type	Breeding ratio[a]	fifa[b]	Fuel cycle time (years)	Compound doubling times (year)[c] for ex-reactor plutonium loss fractions of –			
				0.005	0.01	0.02	0.03
Standard oxide	1.15	≥0.25	2.5[d]	≤54	≤64	≤103	
Advanced oxide	1.22	0.75	4.5[d]	19.6	20.3	22	24
Advanced oxide	1.22	0.75	4.0[e]	17.4	18.1	19.6	21.3

[a]Westinghouse Corporation estimates for commercial LMFBR plants; equilibrium values.

[b]Fifa – fissions per initial fissile atom.

[c]Calculated using methods and results in *Report of Cornell Workshops on the Major Issues of a National Energy R&D Program*, December 1973 ("Bethe Report").

[d]Assumed reprocessing and fuel refabrication time of 1.5 years.

[e]Assumed reprocessing and fuel refabrication time of 1.0 year.

eliminate a 0.1% loss of plutonium. A sizeable capital investment increase and/or a large daily operating cost increase could be easily justified in the fuel fabrication plant to eliminate a loss of a few tenths of a percent of the plutonium as insoluble PuO_2. The value of the insoluble plutonium losses for LWR plutonium recycle fuel is lower because of the lower plutonium content of the fuel; however, the loss value still amounts to an appreciable amount of money. Eliminating a 0.1% insoluble plutonium loss in a 4% PuO_2 fuel would be worth about $10,000/day for a 5-ton/day fabrication plant, or about $2/kg of fuel at the break-even point. A considerable amount of extra money could be spent for operating expense and capital investments in mixed-oxide fuel fabrication plants to produce soluble fuel. As discussed in Sect. 5, these extras are for minor improvements of the normal methods for fuel manufacturing.

Similar savings on capital investment break-even points would be available for reprocessing plants to reduce plutonium losses.

REFERENCES FOR SECTION 4

1. "Environmental Impact Due to Implementation of Plutonium Recycle," pp. IV C-43 to IV C-54 in *Generic Environmental Statement Mixed Oxide Fuel*, WASH-1327, vol. 3 (August 1974).
2. C. Breschet and P. Miquel, CEA, Fontenay-au-Roses, "Improvement of the Procedure Used to Treat Highly Active Irradiated Fuels," Paper 195, *Proc. Int. Solvent Extraction Conf., London, Soc. Chem. Ind.*, CONF-710417 (1971).
3. W. H. Lewis, Nuclear Fuel Services, personal communications, Jan. 30, 1975, and Mar. 13, 1975.
4. J. P. Duckworth, Nuclear Fuel Services, personal communication, Jan. 21, 1975.
5. R. F. Maness, *Corrosion of 304L Stainless Steel and HAPO-20 in Acid-Fluoride Systems*, HW-80658 (Jan. 31, 1964).
6. M. G. Bale, Westinghouse Nuclear Fuel Division, personal communication, Feb. 4, 1975.
7. R. G. Barnes, General Electric, San Jose, Calif., personal communication, Jan. 29, 1975.
8. Ira Taylor, General Electric, San Jose, Calif., personal communication, Jan. 29, 1975.
9. A. Schneider, Allied General Nuclear Services, personal communications, Jan. 21, 1975, and Mar. 17, 1975.
10. S. J. Beard, Exxon Nuclear Company, Inc., personal communication, Apr. 3, 1975.
11. A. R. Irvine and E. L. Nicholson, *LMFBR Fuel Reprocessing: An Evaluation of Process Options for a 5-ton/day Commercial Plant*, in press.
12. B. F. Warner, British Nuclear Fuels Ltd., Windscale Plant, personal communication, May 20, 1975.
13. H. S. Cole, *Corrosion of Austenitic Stainless Steel Alloys Due to HNO_3–HF Mixtures*, ICP-1036 (October 1974).
14. J. H. Goode, C. L. Fitzgerald, and V. C. A. Vaughen, *The Dissolution of Unirradiated and Irradiated $(U, Pu)O_2$ in Nitric Acid*, ORNL-5015 (February 1975).

15. G. E. Creek and J. C. Griess, *Results of Corrosion Experiments Associated with Spent LMFBR Fuel Reprocessing*, ORNL/TM-3972 (October 1972).

16. W. E. Clark and R. E. Blanco, *Dissolution of LMFBR Fuels: Survey of the Corrosion of Selected Alloys in HNO_3–HF Solutions*, ORNL-4745 (December 1971).

17. A. L. Uriarte and R. H. Rainey, *Dissolution of High Density UO_2, PuO_2, and UO_2-PuO_2 Pellets in Inorganic Acids*, ORNL-3695 (April 1965).

18. *Chemical Technology Div. Annu. Prog. Rep. for Period Ending May 31, 1970*, ORNL-4572 (October 1970).

19. *Chemical Technology Div. Annu. Prog. Rep. for Period Ending May 31, 1969*, ORNL-4422 (October 1969).

20. D. N. Hess et al., *Corrosion of Stainless Steel in Acidic Nitrate Waste Solutions from Processing Stainless Steel Reactor Fuels*, ORNL-3474-A (June 6, 1963).

21. A. Schneider, Allied General Nuclear Services, personal communication, Jan. 28, 1975.

22. A. M. Platt, Pacific Northwest Laboratories, personal communication, May 9, 1975.

23. Battelle Pacific Northwest Laboratories, *Quarterly Progress Report, Research and Development Activities, Waste Fixation Program, January through March 1976*, BNWL-2070.

24. Quoted from, *Siting of Fuel Reprocessing Plants and Waste Management Facilities*, ORNL-4451 (July 1970), pp. 4-33. The quote is based on information from J. C. Petrie et al., *Fluidized Bed Calcination of Zirconium Fluoride Wastes in Exploratory Pilot Plant Tests*, IDO-14653 (July 1965) and from unpublished data from R. F. Maness, Battelle Pacific Northwest Laboratories, April 1968.

25. D. W. Magnuson, *Criticality Calculations for Light Water Reactors and Liquid Metal Fast Breeder Reactor Fuels*, Y-DR-9 (Mar. 4, 1969).

26. F. Shahrokhi et al., *The State-of-the-Art in Non-Destructive Assay Systems and Their Applications to an LMFBR Aqueous Fuel Reprocessing Plant*, ORNL/TM-4586 (August 1974).

27. C. R. Cooley, Hanford Engineering Development Laboratory, to Director Fast Flux Test Facility Project Office, letter, July 30, 1974.

28. B. F. Warner, British Nuclear Fuels Ltd., personal communication, May 20, 1975.

29. *Allied General Nuclear Services Final Safety Analysis Report,* Barnwell Nuclear Fuels Plant, Docket No. 50-332.

30. Nuclear Safety Guide, TID-7016, Rev. 1, 1961.

31. J. T. Thomas, ORNL, personal communication, Apr. 15, 1975.

32. B. F. Warner, "Operational Experience in the Evaporation and Storage of Highly Active Fission-Product Wastes at Windscale," *Proceedings of OECD/NEA-IAEA Symposium on Management of Radioactive Wastes from Fuel Reprocessing, Paris, 1972.*

33. P. Lecorche and R. L. Seale, *A Review of the Experiments Performed to Determine the Radiological Consequences of a Criticality Accident,* Y-CDC-12 (Nov. 3, 1973).

34. W. L. Ginkel et al., *Nuclear Incident at the Idaho Chemical Processing Plant,* IDO-10035 (Feb. 15, 1960).

35. W. A. Roger, "Critical Evaluation of the Limit of Transuranic Contamination of Low-Level Waste, AICHE Symposium, *Radioactive Wastes from the Nuclear Fuel Cycle,* No. 54, vol. 72, 1976.

36. H. C. Caliborne, *Neutron Induced Transmutation of High-Level Radioactive Waste,* ORNL/TM-3964 (December 1972).

37. W. D. Bond and R. E. Leuze, *Feasibility Studies of the Partitioning of Commercial High-Level Wastes Generated in Spent Nuclear Fuel Reprocessing: Annual Progress Report for FY 1974,* ORNL-5012 (January 1975).

38. D. W. Clelland, "High-Level Radioactive Waste Management in the United Kingdom," *Proceedings, Managment of Radioactive Wastes from Fuel Reprocessing, OECD-IAEA, Paris, 1972.*

5. REVIEW OF FUEL FABRICATION INFORMATION

5.1 Fuel Fabricators' Viewpoint

Most fuel fabricators contacted in the course of this investigation indicated that they are aware that there might be a problem in dissolving their LWR PuO_2 recycle fuel in pure nitric acid. The prevalent parochial, but quite understandable, viewpoint is that the fuel fabricator's only commitment is to produce fuel that meets the reactor specifications; beyond this commitment, the reprocessor is responsible. Some LWR fuel fabricators point out that a more realistic attitude toward solving this dissolution problem would be to treat it from a nuclear-industry-wide viewpoint. The resolution of such a problem will require cooperation between the PuO_2–UO_2 powder supplier, the fuel fabricator, and the reprocessor. The reprocessor will be the source of the PuO_2 powder, and he may find it advantageous to make a powder, which could be a coprecipitated PuO_2–UO_2 powder, that is "tailor made" for producing a highly homogeneous blended PuO_2–UO_2 product for fuel pellet fabrication. Relatively minor improvements in the fuel fabrication process may also be required. If the problem is investigated in this manner on an industry-wide basis, its solution may be possible at minimum extra cost. There could be a substantial cost incentive to reduce fabrication-induced insoluble plutonium losses (see Sects. 4.6 and 5.3.6).

The public utility companies' (reactor owners') level of awareness and concern about the fuel solubility problem is probably negligible at this time since large-scale PuO_2 recycle is not an immediate problem. However, they eventually will have to bear the cost of coping with plutonium recycle fuel. None of the LWR PuO_2 recycle fuel fabricators have deliberately taken steps to alter fuel manufacturing methods to reduce the amount of insoluble PuO_2. Further, no one in fuel fabrication or reprocessing or currently involved in research and development programs has taken steps to investigate the fuel solubility problem for LWR PuO_2 recycle fuel.

5.1.1 LWR PuO_2 recycle fuel

The general attitude of LWR fuel fabricators seems to be that each fuel fabricator considers himself to be "locked in" on a manufacturing method that works, insofar as reactor fuel specifications are concerned, and he is therefore quite reluctant to make any changes unilaterally to improve fuel solubility because any change in his method might adversely affect his competitive position in the industry. Some discussions have occurred between reprocessors and fuel fabricators concerning the reprocessor PuO_2 product. The primary concern of the discussions has been to develop a method to make the product compatible with the fuel fabricator's existing pellet preparation method.

Two commonly held beliefs are cited by most fuel fabricators as justification for their position that they do not need to be particularly concerned about fuel solubility. The first belief is that fuel irradiation will convert any PuO_2 particles remaining in the fuel after fabrication to a soluble form (a well diluted solid solution of PuO_2 in UO_2), and the second belief is that the fuel reprocessor will use fluorides to dissolve PuO_2 recycle fuel if it is not soluble in nitric acid.

Irradiation will improve the solubility of an incompletely soluble fuel but will not always result in the complete elimination of the insoluble PuO_2. Other factors such as the size of the PuO_2 particles and the irradiation conditions are involved in a not thoroughly understood and predictable relationship. The work of Schiefelbein and Lerch[1] is cited by fuel fabricators as the basis for their optimism that irradiation will eliminate any fuel solubility problem. This work is reviewed, and caveats concerning it are expressed in Sect. 3.11. Lerch recently noted that this work and similar work with LMFBR fuel point to the belief that irradiation <u>may</u> eliminate an LWR PuO_2 recycle fuel insolubility problem.[2] However, fuel solubility information about LWR PuO_2 recycle fuel made for the plutonium recycle demonstration program and that being made by current methods is nonexistent, since the continuation of fuel dissolution study programs[1] was cancelled by the AEC (now ERDA). Some fuel fabricators think that the small samples of fuel

made for Schiefelbein and Lerch's program may have been made by methods that differ from the current practice and therefore may have different dissolution properties compared with fuel made by current methods.

The belief that reprocessors will use fluorides may be partially based on the almost universal use of HNO_3–HF mixtures by fuel fabricators for "dirty" scrap recovery. Equipment corrosion and liquid-waste disposal problems are minor for the resulting alpha wastes in a fuel fabrication plant compared with the problems faced by the reprocessor where similar wastes are all highly radioactive. Fluoride was used at the Nuclear Fuel Services (NFS) reprocessing plant for dissolving a unique fuel in a special reprocessing campaign.[3] This particular use of fluoride is cited by some fuel fabricators as the basis for the belief that fluorides can be used more or less routinely, if required, for PuO_2 recycle fuel dissolution. This one-time use of fluoride at NFS was as a catalyst to dissolve a UO_2–ThO_2 fuel. The fluoride in the dissolvent was thoroughly complexed with aluminum nitrate before use to minimize dissolver corrosion. The corrosion of the process evaporator titanium heat exchanger tube bundles during this campaign was a special concern.[4] The fluoride complexing that gave an acceptable corrosion rate for this special, one-time UO_2–ThO_2 processing campaign is impossible for PuO_2 dissolution since fluoride complexing agents completely destroy the effectiveness of the fluoride for promoting PuO_2 dissolution.[5] Fluoride in various amounts was and is used in government-operated fuel reprocessing plants for certain fuels as a decladding agent, as the primary dissolvent, as a dissolution catalyst (principally for thorium materials), and to improve fission product decontamination. None of these plants have shear-leach head-ends, and they resort to total dissolution of the cladding to expose the fuel. Clad dissolution is unacceptable for commercial power reactor fuel reprocessing. Government plants have operated under ground rules regarding failed-equipment disposal, waste storage methods, and general economics that are unacceptable to a commercial fuel reprocessor in today's regulatory environment.

5.1.2 LMFBR fuel

The situation regarding LMFBR fuel solubility may be better than for LWR recycle fuel because the problem has been recognized, has been more extensively investigated, and large-scale commercial reprocessing and fabrication of LMFBR fuel is even further in the future than LWR plutonium recycle fuel, thus allowing more time for resolution of the problem before a reprocessing and fuel fabrication industry becomes necessary for LMFBR fuel. The government commitment to the LMFBR program has resulted in attempts to produce high quality fuel to maximize the possibility of success of the Fast Flux Test Facility (FFTF) and the LMFBR program. Although these fuel improvements were apparently not done to minimize the fuel insolubility problem, the debugging of the fabrication methods has increased both the homogeneity and the degree of solid solution of PuO_2 in UO_2 for both coprecipitated and mechanically blended fuel. This improvement in fabrication methods is highly beneficial for increased fuel dissolution, but it is still not known whether the present fuel will qualify as a soluble fuel according to reprocessing plant dissolution procedures. Additional development work is needed, and it is not known whether the FFTF standards for fuel acceptability will be required for commercial LMFBRs. It would be regretable if the standards are downgraded for "commercial" fabrication of this fuel and a greater fuel solubility problem resulted.

5.2 Fuel Fabrication Methods

5.2.1 LWR PuO_2 recycle fuel

The descriptions of the processes that were used for fabricating the fuel specimens for the AEC-sponsored plutonium recycle demonstration program were well publicized.[6,7] The homogeneity specification for this fuel and the proposed ASTM homogeneity standard for future LWR PuO_2 recycle fuel is described in Sect. 3.1.2. Fuel was made by mechanical blending of PuO_2 and UO_2 powders and by the ammonia-coprecipitation of a master blend of 35% PuO_2–UO_2 followed by hydrogen reduction, mixing

with additional UO_2, and then pelletizing the powders. Fuel performance in the reactors was satisfactory and no consideration was given to any reprocessing-related problems. One fuel fabricator proposed to use a dissolution test as one method for evaluating fuel pellet homogeneity; however, this was not accepted by the AEC.[8]

The mechanical blending method is the only method used for LWR plutonium recycle fuel fabrication because it is the simplest process for manufacturing fuel pellets, provided someone else other than the fuel fabricator prepares the oxide powders. Federal regulations requiring shipments of large amounts of plutonium as a solid, plus safeguards, criticality problems, and minimizing liquid-waste production at the fabrication plant are cited as some of the other reasons coprecipitation-type processes are not favored. Of course the possibility exists that a well-coordinated reprocessing–fuel fabrication industry will have the coprecipitation done at the fuel reprocessor's plant to prepare a master blend of nitric acid soluble $\leqslant$35% PuO_2–UO_2 powder that is shipped to the fuel fabricator for blending with additional UO_2 and then pelletizing. This plan could achieve the fuel homogeneity and solubility characteristics of the coprecipitation process without sacrificing the major advantages of the mechanical blending process at the fabrication plant. Safeguard-related aspects for shipping <30% PuO_2–UO_2 powder are believed to be better than for pure PuO_2 powder,[9] but the advantage is probably marginal.

Fuel fabricators today are reluctant to discuss details of their manufacturing methods or fuel homogeneity for proprietary reasons. Powders are generally screened (200 mesh or smaller screen) to remove lumps and to break up large agglomerates, blended, and then mixed by some quick method such as a jet mill or a V-blender with an internal intensifier bar to break up the largest PuO_2 agglomerates so that the PuO_2 can mix with the UO_2. The blending and mixing operations do not result in significant size reduction of the individual UO_2 and PuO_2 particles and, therefore, are not particularly effective in breaking the PuO_2 particle agglomerates up into individual particles and completely dispersing the PuO_2 in the UO_2. The proposed reactor fuel

specifications permit PuO_2-rich areas up to 200 μm in diameter; therefore, there is no incentive to produce a complete dispersion of the individual PuO_2 particles in UO_2 for maximum homogeneity and solubility. Although these specifications will presumably satisfy all reactor performance criteria and are relatively painless for the fuel fabricator to meet, it is questionable whether this fuel is satisfactory for the fuel reprocessor's dissolution process. If improved homogeneity and solid solution is required for reprocessing purposes, it will not compromise reactor performance and, in fact, it will be slightly better fuel. The powder mixture is usually granulated by either a wet process using organic binders (apparently not used much today) or by a dry process by prepressing the powders and granulating the slugs. Granulation improves the handling characteristics of the extremely fine PuO_2–UO_2 powder when fed to the pellet presses. Die lubricants are usually added to the granules and pellets are pressed. The green pellets are loaded into molybdenum boats and sintered in a continuous-type furnace at 1650 to 1750°C for 4 to 6 hr in a reducing atmosphere of hydrogen and inert gas. The sintered pellets are ground to the final finished size, inspected, and loaded into fuel rods. Higher sintering temperatures, around 1750°C, have apparently been used by some fabricators since the fuel pellet in-reactor densification problem was recognized.[10] Other process changes have been made to prevent densification, but these are proprietary. Freedom from densification effects require that samples of unirradiated fuel be dimensionally acceptable after an exposure to 1700°C for 24 hr.

No data are available on the nitric acid solubility for pellets made by current "commercial" processes either before or after irradiation. However, it has been stated that "several percent" of the plutonium might be insoluble in a fuel produced recently in a foreign plutonium recycle fuel fabrication facility.[11] The general process details, including the PuO_2 preparation method, appear to be similar to those used in the United States for LWR plutonium recycle fuel.

5.2.2 LMFBR fuel

Initial operation of the FFTF reactor will be done with one core produced by a mechanical blending fuel fabrication process and one produced by a coprecipitation fuel fabrication process.

The flowsheet for the Babcock and Wilcox (NUMEC) mechanical blending fuel fabrication process has been described in detail.[12] The general details of the process are identical to the steps used for LWR plutonium recycle fuel fabrication. PuO_2 powder from an oxalate precipitation process[13] is calcined to ensure complete freedom from carbon,[14] to eliminate an occasional minor carryover of fluoride[15] from the oxalate process, and to ensure uniform PuO_2 physical properties. The powder is ball-milled to break up lumps, then screened and V-blended with UO_2. The blend is jet-milled for complete mixing and then mixed with a pore-forming organic material. The blend is slugged, granulated, and pressed into pellets. Pellets are presintered at 700 to 800°C for 2 hr in argon–8% hydrogen gas and sintered at 1675°C for 4 hr in the same gas mixture. Resintering at 1725°C is done occasionally when needed to increase the pellet density to the desired 90.5% of theoretical density. The operating temperature limit of the sintering furnace is about 1800°C.[14] Pellet-finishing and rod-loading operations are conventional. The principal process improvements made for the FFTF fuel compared with earlier LWR plutonium recycle fuel and fast-reactor fuel sample production were improved process control and inclusion of the jet-mill mixing operation in the system.[14] In LWR plutonium recycle fuel production by other organizations, the jet mill or V-blender only breaks up the largest PuO_2 agglomerates and mixes them with the UO_2. For LMFBR fuel, the Babcock and Wilcox (B&W) jet mill is operated so that a significant size reduction of the basic PuO_2 and UO_2 particles occurs during the milling of the blended powders.[14] This milling breaks up the PuO_2 agglomerates and guarantees an extremely homogeneous mixture of PuO_2 in UO_2 as the particles are ground together. The improvement in pellet homogeneity and increased nitric acid solubility of the recent pellets compared with the earlier samples of pellets (Sect. 3.2.1) was primarily due to learning how to feed and control the jet mill.[14] Another very

important benefit of this learning process was a sizeable reduction in scrap recycle.[14] This scrap reduction is a logical spin-off since the intimately mixed and ground powder should be a uniform quality feed to subsequent steps making possible the maintenance of optimum process conditions. Reduction of pellet rejects and scrap recycle is a powerful economic incentive for fabrication process improvement. The routinely produced jet-milled product is believed to be as homogeneous as a high quality coprecipitated material.[14]

Some information has been made available on the coprecipitation process used by Kerr-McGee Corporation to produce FFTF fuel.[16] Ammonia precipitation, calcination, and reduction are used to prepare a 50% PuO_2–50% UO_2 powder that is then mixed with additional UO_2 and pelletized. The two-step powder-preparation procedure is used to avoid a potential glove box safety problem associated with the pyrophoric properties of coprecipitated PuO_2–UO_2 containing >50% UO_2. Inert atmosphere glove boxes or carefully controlled conditioning of the PuO_2–UO_2 powder prior to exposure to air would avoid this problem. The coprecipitated powder is extremely fine and has a very high surface area. The powder (with added UO_2) is heat treated by various methods to reduce the surface area and produce a coarse, bonded powder with better pellet-pressing characteristics. The pellets are sintered at 1650 to 1700°C for about 8 hr. The sintered pellet is an open-porosity-type pellet since it was optional whether to make open- or closed-porosity pellets (the B&W fuel is the closed-porosity type). The fuel pellet is quite homogeneous in its present form; an even greater degree of homogeneity would have been obtained if closed-porosity pellets were produced, since the diffusion of PuO_2 during sintering would be enhanced.[16] Sintered scrap that is recycled by the wet method is dissolved in pure nitric acid without using fluorides, although a heel is carried in the dissolver from batch to batch. This observation coincides with the results of the 12 *M* HNO_3 dissolution tests at Hanford Engineering Development Laboratory which show that the fuel is almost a completely homogeneous solid solution (Sect. 3.2.1). Precipitator control problems were responsible for the large particles of PuO_2 found in dissolution tests of the first batches

of FFTF fuel pellets. Similar control problems are likely to be the cause of incomplete dissolution of earlier samples of coprecipitated fuel pellets.[17]

5.3 Fuel Fabrication Process Variables and Changes to Achieve Higher Solubility in Pure Nitric Acid

All available information unequivocally indicates that the prime factor for improving the solubility of fuel pellets is to improve the homogeneity of the dispersion of the PuO_2 in the UO_2 and to ensure that all the PuO_2 is in solid solution with the UO_2. The ideal fuel pellet for reprocessing dissolution purposes is therefore one in which the PuO_2 is completely in solid solution with the UO_2 and one with no areas or grains with a PuO_2 content greater than the nominal value. The substantial improvement in the solubility of FFTF fuel pellets made by vendors (Sect. 3.2.1) illustrates this point, since the improvements in homogeneity reduced the amount of undissolved PuO_2 by a factor of 34 for mechanically blended fuel and by a factor of 17 for coprecipitated fuel.

Completely homogeneous solid solution LWR plutonium recycle and LMFBR fuel can be produced by mechanical blending or by coprecipitation; however, such a solution is probably not required for reprocessing purposes provided the amount of undissolved residue in unirradiated fuel is small and the particle size of the residue is very small. Given these conditions, irradiation should render the fuel fully soluble. Current information is not sufficient to precisely define the degree of inhomogeneity that is acceptable in unirradiated fuel to ensure that this fuel will be soluble under reprocessing plant dissolution conditions after irradiation. Fuel discharged from the reactor before being irradiated enough to make it soluble would be a special problem.

A suggestion has been made that part of the plutonium dissolution residues may be due to insoluble plutonium compounds formed with the impurities present in the oxide powders or from materials picked up during fuel fabrication, such as particles of the refractory lining of the sintering furnace.[18] No data have been presented to substantiate

this suggestion as the cause of incomplete dissolution for current production fuels. Some refractory contamination of the fuel pellets occurred during very early testing of the FFTF pellet fabrication process; however, this contamination was obvious and presented a readily identifiable microstructural change.[19] Inspection methods used by at least one FFTF fuel fabricator detect anomalies due to contamination by the furnace refractory.[14] The fuel pellet reject rate resulting from this problem is extremely low.[14] Covers on the pellet sintering boats to prevent refractory particles from falling on the pellets and furnace atmosphere control to prevent vapor-phase transport of alumina are standard procedures for preventing refractory contamination.[15] The low level of impurities found in as-received oxide powders are well dispersed and are not likely to be responsible for the relatively large particles of PuO_2 in some dissolution residues. Metallic contamination of fuel by corrosion and erosion of equipment during powder processing have been occasional chemical impurity problems in the past (the effect on solubility is unknown). Corrosion and erosion have occurred when proper attention was not given to equipment design, materials of construction, and careful operation.[15] Although these fuel fabrication impurity problems have caused concern in the past, they should not be a problem today.

The principal mechanically blended fuel fabrication variables that affect fuel pellet solubility are the pellet sintering conditions, the mixing of PuO_2 and UO_2 powder, and the properties of the PuO_2 powder. For coprecipitated fuels, the control of the precipitator is of prime importance for preventing PuO_2 segregation, although the sintering conditions as well as powder mixing are important if a high PuO_2 content powder is subsequently mixed with additional UO_2. The principal fabrication variables are interrelated, since it is possible to overcome a deficiency in one or more of the parameters by changing the other variables to achieve the desired fuel pellet homogeneity and dissolution properties. Therefore, it is only possible to indicate in a general way the improvements in procedures that should lead to more soluble LWR PuO_2 recycle and LMFBR fuel pellets. These process options are discussed

below, along with a brief discussion of a thermal codenitration process. Many other fabrication process variables are involved in the transformation of powder to reactor-grade fuel pellets. These variables have little if any effect on the dissolution properties of the fuel pellet and are not considered here.

5.3.1 Fuel pellet sintering

The sintering temperature is an important process variable affecting fuel solubility[20] since high sintering temperatures and long sintering times promote solid solution of PuO_2 in UO_2. A reasonable balance must be made between the sintering temperature, time at temperature, and PuO_2 particle size, since gross nonhomogeneity may not be eliminated in the typical sintering operations used today in small-scale commercial fuel fabrication. For example, it has been theoretically estimated[6] that only 20% dilution of a 50-μm-diam PuO_2 particle with UO_2 occurs during a 4-hr sinter at 1650°C. In actual practice, less diffusion occurs due to incomplete contact of the UO_2 with the PuO_2 particle. The center of such a particle would remain almost pure PuO_2 and would be insoluble in nitric acid. Extremely high temperatures and/or long sintering times would be required to eliminate the 200-μm plutonium-rich particles that would be permissable in accordance with proposed ASTM specifications for LWR PuO_2 recycle fuel (Sect. 3.1.2).

Sintering temperatures around 1650°C are now common practice. Statements to the effect that sintering temperatures around 1700°C are "pushing the limits of furnace technology"[18] may be true for existing furnaces at a particular place; however, this situation does not seem to be true for the fuel fabrication industry in general. Higher temperatures (1750°C) are attainable and have been used on a routine basis, especially since the fuel densification problem occurred with LWR UO_2 fuels.[10] No problem has been encountered with a furnace at this temperature, and its lifetime has been satisfactory for PuO_2–UO_2 pellet production.[10] Some conventional furnaces have been operated at 1900°C for UO_2 pellet production.[21] However, continuous furnace use at this temperature resulted in damage to the refractory caused by pushing the

heavily loaded molybdenum trays of pellets over the refractory.[21] Sintering furnaces capable of operating continuously at 2000°C can be manufactured today using zirconia refractory linings and tungsten heating elements.[21] These furnaces would cost about 50 to 60% more than furnaces that are built with high-purity alumina refractory and molybdenum heating elements. There was considerable interest in the 2000°C furnaces at the time UO_2 pellet manufacturing methods were being changed to solve the fuel densification problem. However, the LWR UO_2 fuel manufacturers changed other fabrication operations and did not resort to these higher-temperature sintering furnaces.[21]

Higher sintering temperatures are very desirable for promoting homogeneity, but may not be mandatory if other fabrication parameters are modified. The volatility of PuO_2 and UO_2 is appreciably greater at high temperatures and this must be considered before adopting very high sintering temperatures. The PuO_2 volatility effect will be increased for a highly nonhomogeneous fuel that exposes large PuO_2-rich areas on the surface of the "green" fuel pellet. Nevertheless, serious consideration should be given to the options of using higher sintering temperatures and longer sintering times as a means of ensuring homogeneity and allowing more leeway for accommodating normal process variations on a day-to-day basis. The higher cost of furnaces for very high sintering temperatures of about 2000°C is a very small part of the total investment in a fuel fabrication plant. These costs may be trivial compared to the advantages for both the fuel fabricator and the fuel reprocessor (Sect. 6.8).

5.3.2 Mixing PuO_2 and UO_2 powders

Fine powders are difficult to mix completely because they have a tendency to agglomerate. Finely divided, high surface area, somewhat hydroscopic PuO_2 falls into this category. Agglomerates of PuO_2 particles are difficult to break up and are the usual source of the high PuO_2 content zones found in finished LWR PuO_2 recycle and LMFBR pellets, since the PuO_2 powder is usually screened through a 170-mesh (88-μm) or smaller screen prior to blending. In fact, given today's sources of

PuO_2 powder and sintering conditions, inadequate mixing is the single, most important reason for failing to achieve high homogeneity and fuel pellet solubility.

High PuO_2 content powder blends are more difficult to mix uniformly to achieve high homogeneity and fuel pellet solubility. This fact was noted by Lerch who observed that, for carefully standardized mixing (12 hr of ball milling) and other fabrication conditions, the solubility of 15% PuO_2 fuel was higher than for 25% PuO_2 fuel.[20] (Dissolution test conditions effectively wiped out the inherent differences in dissolution rates of solid solution 15 and 25% PuO_2 fuels.) LWR PuO_2 recycle concentrations of PuO_2 in powder blends should be relatively easy to mix thoroughly. Unfortunately, the incentive to do this does not exist now, since the proposed fuel pellet specifications would allow a relatively unlimited number of 200-μm particles (agglomerates) of PuO_2 in the fuel (Sect. 3.1.2). A variety of mixing methods such as ball- and rod-mill mixers and V-blenders have been used. These devices, as usually operated, are marginally effective at best, since they do not break down all agglomerates and thus intimately mix the particles. A further disadvantage is that these methods are time-consuming operations if a high degree of homogeneity is desired. They should not be relied upon for the microscopic degree of mixing that is required for soluble fuel. The jet mill used by B&W for FFTF fuel production demonstrates a fast, effective mixing method in which the mill grinds the blended PuO_2–UO_2 powder, resulting in a substantial reduction in average particle size.[12,14] The jet mill breaks up the agglomerates of PuO_2 particles and thoroughly mixes the PuO_2 and UO_2. More efficient mixing and a smaller amount of undissolved PuO_2 in the fuel pellets might have resulted if the particle size of the PuO_2 powder, and possibly the UO_2 powder, was smaller and more uniform before starting the mixing and grinding operation.

A less demanding mixing problem exists for LWR PuO_2 recycle fuel because of the much smaller amount of PuO_2 that must be uniformly dispersed in UO_2. Some fabricators "micronize" (a type of jet mill) to mix the blended powders, apparently without significant reduction in particle size of the feed, and then claim to have fabricated a homogeneous pellet without defining the degree of homogeneity, probably for proprietary

reasons. Other fabricators use V-blenders with intensifier bars and claim the same results. Perhaps the pellets are homogeneous enough to meet the proposed ASTM homogeneity standard for recycle fuel (Sect. 3.1.2); however, it remains to be proven that these pellets will qualify as soluble fuel. If more efficient mixing methods are indicated, the jet-mill grinding-mixing operation as practiced by B&W would be very attractive. A further improvement might be a two-stage mixing sequence for maximum-possible homogeneity. The first stage might consist of jet grinding blended (about 20 to 25%) PuO_2–UO_2 powder. This very fine, intimately mixed powder would then be blended with the remaining UO_2 and jet milled again. Less intensive mixing similar to that now used for LWR plutonium recycle fuel might suffice for the second mixing step since any PuO_2-rich agglomerates would already be diluted to $\leqslant$20 to 25% PuO_2 prior to the final blending and sintering. The resulting fuel should be readily soluble.

5.3.3 PuO_2 powder

A study of the effect of fabrication process variables by Lerch[20] confirms that fuel pellet dissolution and homogeneity is improved by decreasing the size of the PuO_2 powder particles. Extremely fine submicron-sized PuO_2 produced by burning plutonium metal yielded fuel that was more soluble than fuel made with PuO_2 produced by the currently used oxalate precipitation process. This metal-derived PuO_2 powder was relatively inactive from the ceramic-forming standpoint since the particles were "presintered" by the high-temperature metal-burning process. Some improvements in the oxalate process for fabricating FFTF fuel have been made since then. Oxalate precipitation is currently the only source of production quantities of PuO_2, and this process yields a small-particle-size powder with a particle shape that is desirable for good pellet pressing and sintering properties. A description of the oxalate process for the production of ceramic-grade PuO_2 for FFTF fuel has been presented recently.[13]

The specifications for the FFTF PuO_2 powder produced by the oxalate process state that all the powder must pass through a 170-mesh sieve,

99 wt % through 200 mesh and 95 wt % through 325 mesh (44-μm opening); also, ≥50% of all particles must be smaller than 20 μm.[22] Although the powder produced by this process generally has a smaller particle size than required by the specifications,[23] it nevertheless permits large PuO_2 particles up to 88 μm in diameter. The large range in particle size permitted by the screening specification for FFTF PuO_2 powder is the result of accepting a more or less standard PuO_2 product already mass produced by an existing equipment line, with minimum modifications to yield the lowest cost PuO_2.[23] The present production line could, without any particular problems, produce PuO_2 powder in which ≥50% of all particles are <15 μm, with a reasonable allowance for operating leeway.[23] Subject to development work for resolving possible plutonium oxalate slurry filtration problems and building an improved production line, the oxalate process should be capable of producing extremely fine PuO_2 powder.[23] The specifications for FFTF-grade PuO_2 also require that the powder shall be capable of being sintered to a ≥90% theoretical density PuO_2 pellet without a binder. Although other properties such as surface area and particle shape are important for achieving this specification, there is a definite opinion based on experience with the sintering specification that both large and small particles allowed by the current specifications must be present in order to sinter to a high-density pellet.[19] Large PuO_2 particles and large agglomerates of very small particles are detrimental to the objective of achieving a soluble homogeneous fuel. The B&W and Kerr-McGee FFTF fuel fabrication experience (Sect. 3.2.1) illustrates this problem. The pellet sintering specification for the PuO_2 powder thus may work adversely to the more desirable requirement for producing a uniform, very small particle size PuO_2 powder[19] that is desirable for a more homogeneous fuel. A PuO_2 pellet sintering specification is apparently not required for PuO_2 used by LWR fuel fabricators and may not be even necessary, since the UO_2 properties may be the governing factors for this low PuO_2 content fuel.

New PuO_2 production systems should be designed to produce smaller, more uniform particle size PuO_2 powders than those produced for the FFTF. The minimum standards of the proposed ASTM specification for

PuO_2 powder[24] do not meet this objective, since any powder that would pass through a 200-mesh (74-μm) screen would apparently be acceptable and would only be a 16% decrease in maximum particle size from the FFTF PuO_2 powder specifications.

Other properties of PuO_2 powder are important for achieving solid solution in UO_2. The principal one is the surface area of the powder. The FFTF specification is $\geqslant 2.5\ m^2/g$ (BET); however, a surface are of $\geqslant 5\ m^2/g$ is probably preferable, providing that the greater area does not cause pellet-pressing problems or excessive pellet shrinkage during sintering. Thermal pretreatment or other conditioning of the blended PuO_2–UO_2 powders prior to pellet production may be necessary to overcome the handling problems of a very high surface area PuO_2 powder.

The hygroscopic properties of high-surface-area, low-calcination-temperature PuO_2 must be considered in the design of PuO_2 production and pellet fabrication facilities. The pressurization of PuO_2 shipping containers due to radiolysis of sorbed moisture must be minimized. The moisture content of PuO_2 that could be produced in reprocessing plants may be very important in the next few years, since storage in sealed containers is possible for several years until mixed-oxide fuel fabrication facilities are built and plutonium is recycled on a minimum delay basis.

The properties of the UO_2 powder should be tailored to complement the PuO_2. For LWR PuO_2 recycle fuels this may not be too important since the PuO_2 is largely lost in the UO_2. The UO_2 (and PuO_2 also) should be a uniform quality material, regardless of vendor, for minimizing fuel fabrication problems.

5.3.4 Coprecipitated fuel

The available information on FFTF fuel fabrication[16] indicates that precipitator control problems were causing selective PuO_2 precipitation that was responsible for large PuO_2 particles in the residue and incomplete dissolution. Similar problems plus small laboratory-scale, nonstandardized procedures were probably the cause of incomplete

dissolution of earlier samples of coprecipitated fuel.[17] These problems were mostly solved for FFTF fuel, as evidenced by the fact that over 50% of the recent samples of production fuel had no dissolution residue.[18] The remaining samples had an average total residue of about 0.025 wt % (about 0.08% of the plutonium). The variability of the most recent samples (Sect. 3.2.1) suggests that some process improvements may be possible in the precipitation step or in the following powder-blending and sintering operations.

Completely homogeneous, nitric-acid-soluble fuel can be prepared by coprecipitation.[20] Coprecipitation of all the uranium with the plutonium is preferable from the standpoint of achieving the best homogeneity, but the size of the coprecipitation operation is considerably increased. However, there are no major drawbacks to coprecipitating a PuO_2–UO_2 master blend that is soluble in nitric acid and then blending in the additional UO_2 in a subsequent step as is done for FFTF fuel.[16] Coprecipitation has always been done in the past by fuel fabricators. Regulations now prohibit shipment of plutonium solutions; therefore, fabricators would have to dissolve the plutonium compound (using fluorides?) before coprecipitation. This additional sizeable chemical operation is cited by fuel fabricators as a disadvantage of using the coprecipitation process now. Master-blend preparation at the reprocessing plant is a logical alternative. Preparation at the plant would satisfy plutonium shipping requirements, would be preferable from the safeguards standpoint,[9] and would be compatible with existing mechanical blending fabrication techniques.

Development work is being done at Battelle Pacific Northwest Laboratories on converting plutonium nitrate solution to plutonium nitrate crystals for shipping purposes. If successful, this conversion might also satisfy plutonium shipping criteria and still allow ready resolution of the crystals by the fuel fabricator for a coprecipitation process at his site.

General Electric Company, Vallecitos, California, has recently proposed to combine ammonia coprecipitation with fluid-bed calcination of the coprecipitated slurry.[25] The coprecipitation process can be

operated to produce extremely fine mixed crystals that would be unacceptable in the usual coprecipitation process because of filtering problems. The calcined powder is extremely homogeneous and reactive from the ceramic-forming standpoint. Fuel scrap is readily dissolved in pure nitric acid. Low plutonium content liquid wastes containing ammonium nitrate and ammonia are eliminated by evaporating them during calcination and converting them to nitrogen and water in a catalytic bed. This conversion process eliminates liquid wastes that have been a drawback of previous ammonia coprecipitation processes.

5.3.5 Thermal codenitration

The thermal codenitration method of preparing mixed PuO_2–UO_2 powder is suggested as a process worthy of further investigation because it achieves the homogeneity of a coprecipitated powder with far fewer steps than are now required to go from nitrate solutions to mechanically blended or coprecipitated powder. Also, criticality control problems may be simpler. This method may be more adaptable to shielded remote operations than the present methods for preparing UO_2 and PuO_2 powders and then blending them. Thermal codenitration appears to have fewer chemical-control, liquid-filtration, and liquid-waste problems than either the ammonia coprecipitation or the oxalate precipitation production methods. No extraneous reagents (oxalic acid, ammonia) are introduced into the total fuel cycle. One fuel manufacturer notes that the production of PuO_2 in a large plant by direct calcination of the nitrate would probably be preferred to the oxalate process for several of the foregoing reasons.[26]

Thermal codenitration followed by hydrogen reduction has been investigated briefly in the United States as a method for preparing PuO_2–UO_2 powder for fuel pellet fabrication.[27] PuO_2 powder with satisfactory properties for pellet fabrication has also been prepared by calcining nitrate solutions.[28,29] In exploratory experiments at Argonne National Laboratory, mixed 20% plutonium–80% uranium nitrate solution was denitrated dropwise on a hot surface at 300°C to form PuO_2–UO_3 powder, which was then reduced with hydrogen to PuO_2–UO_2 . Pellets were prepared

from the powder and examined for homogeneity. Both electron microprobe examination with a 0.5-μm-diam beam and x-ray diffraction measurement of the lattice parameter of the pellet samples indicated that only a single oxide phase was present, with no evidence of segregation of either component.[27] A small-size fluidized-bed calciner was installed in a glove box and operated briefly to produce oxide powders with plutonium contents suitable for LWR plutonium recycle and LMFBR fuels. Pellets were prepared only from the LWR material before the program was terminated. Some material was supplied to a commercial LWR PuO_2 recycle fuel fabricator for evaluation, but no information feedback on the results of this evaluation occurred.[30] The PuO_2–UO_3 calciner product was dissolved in pure nitric acid (several successive batch treatments were necessary) for recycle as feed to the fluidized bed.[30] The success of this dissolution indicates that the PuO_2 had a very small particle size and was extremely reactive; otherwise, the PuO_2 would not have dissolved since it was not a solid solution in UO_2 at this stage. Dissolution tests were not made on the sintered pellets.[30] However, the small amount of available evidence indicates that the sintered pellets should have been soluble in nitric acid.

The possibility of incorporating materials in the calciner feed that would assist in decomposing nitrates at a lower temperature appears to be uninvestigated; a more sinterable powder might be obtained. Formic acid, formaldehyde, and hydrazine are examples of materials that might be beneficial. A fluidized-bed calciner may not be the best type of calcining equipment. The unfortunate experience at the Midwest Fuel Recovery Plant in their attempt to operate and maintain a large, fluidized-bed uranium calciner by remote methods indicates that this type of calciner may not be acceptable for plutonium–uranium mixtures without extensive equipment-development work. Other type calciners may be more feasible, for example, considerable experience at Hanford with large, production-scale, continuous-stirred-bed uranium calciners[31] and small, stirred-bed calciners for direct calcination of plutonium nitrate[29] and for plutonium oxalate[13] suggests that this type equipment may be a more feasible alternate to the fluidized-bed calciner.

The calcined powder may need modification for optimum pellet pressing and final sintered-pellet properties.

Codenitration appears to be an attractive and possibly more economical way to produce oxide powder that can be used to prepare highly homogeneous, soluble fuels. Some additional process development is obviously required. However, there does not seem to be any serious technical obstacle to using this method for PuO_2–UO_2 powder preparation for both LWR PuO_2 recycle and LMFBR fuels.

5.3.6 Costs for improved pellet sintering to increase fuel solubility

A brief investigation shows that a strong economic incentive exists to produce fuel containing a very small amount of insoluble plutonium. High sintering temperatures and/or longer sintering times will promote homogeneity and complete dissolution, although other fabrication process operations or process variables could be changed to accomplish the same end result and might be a less-expensive way to attain highly soluble fuel. A high-temperature sintering furnace (for 1000 kg/day of fuel pellets) capable of operating at about 2000°C instead of the standard 1700°C is estimated to cost about $83,000 more than the standard furnace.[21] This cost difference is due to using a zirconia refractory liner and tungsten heating elements instead of high-purity alumina refractory and molybdenum heating elements. The furnace provides about 4 hr sintering time at full capacity. For LMFBR fuel containing about 20% plutonium after irradiation, with an assumed unit value of $50/g of plutonium, each 0.01% reduction in plutonium losses in the reprocessing plant due to the elimination of insoluble plutonium that would otherwise be lost saves about $1000 per fabrication plant operating day, or about $1/kg of fuel. The extra investment for the 2000°C furnace would be paid off in 83 days if the solubility of the fuel were increased by only 0.01%. Another example of a process change to improve fuel solubility would be to double the sintering time at about 1700°C. The standard 1700°C furnace for UO_2 pellet production costs about $137,000 (Ref. 21). Assume that this furnace would cost about $274,000 when equipped with glove boxes at each end to adapt it to PuO_2–UO_2 fuel

fabrication. The capital cost of the extra furnace would be recovered in only 274 days if the fuel solubility were increased by only 0.01%. Actually, higher sintering temperatures or longer sintering times may result in a much greater reduction of fuel insolubility than previously noted, resulting in a proportionately larger economic incentive to improve fuel solubility. Other benefits could include a reduction in the amount of rejected pellets and less reprocessing problems.

An economic incentive for decreasing the insolubility of LWR plutonium recycle fuel exists; however, this incentive is not as strong as that for LMFBR fuel because of the lower plutonium content of the LWR fuel. Irradiated LWR plutonium recycle fuel pins (fuel cycle equilibrium discharge basis) will contain about 3% plutonium.[32] Again, assuming a unit value for the plutonium of $50/g, each 0.01% reduction in plutonium loss in the 1000-kg/day fabrication plant is equivalent to a saving of $150 per day. This saving would pay for the extra investment for a 2000°C sintering furnace in about 550 days.

REFERENCES FOR SECTION 5

1. G. F. Schiefelbein and R. E. Lerch, *Dissolution Properties of UO_2-PuO_2 Thermal Reactor Fuels*, BNWL-1581 (June 1971).
2. R. E. Lerch, *Hanford Engineering Development Laboratory (HEDL)*, personal communication, Feb. 13, 1975.
3. J. W. Duckworth, Nuclear Fuel Services, personal communication, Aug. 23, 1975.
4. W. H. Lewis, Nuclear Fuel Services, personal communication, Jan. 30, 1975.
5. A. L. Uriarte and R. H. Rainey, *Dissolution of High-Density UO_2-PuO_2 and UO_2-PuO_2 Pellets in Inorganic Acids*, ORNL-3695 (April 1965).
6. J. Haley, *EEI-Westinghouse Plutonium Recycle Demonstration Program Progress Report for the Period Ending April 1970*, WCAP 4167-1 (May 1970).
7. *Plutonium Utilization in Boiling Water Reactors Phase II, 1969 Annual Report*, NEDC-1211 (July 1970).
8. C. S. Caldwell, Babcock and Wilcox Corp., Nuclear Materials Division, personal communication, Mar. 14, 1975.
9. "Technical Options for Plutonium Safeguards," Atomic Industrial Forum study reported in *Nucleonics Week* 16:(39) (Sept. 25, 1975).
10. T. Bullock, Westinghouse Plutonium Fuel Development Laboratory, personal communication, Feb. 11, 1975.
11. W. Stoll, discussion after his paper, "Experience in Operating a Pu-Fabrication Facility," at Joint Topical Meeting on Commercial Nuclear Fuel Technology Today, ANS-CNS, April 28-30, 1975, Toronto, Canada.
12. W. J. Ross, "Fabrication of FFTF Fuel Pins at Babcock and Wilcox," *Trans. Am. Nucl. Soc.* 21: 248-50 (June 1975).
13. P. C. Doto and C. M. Peabody, "Production of Ceramic Grade Plutonium Dioxide," *Trans. Am. Nucl. Soc.* 21: 246-47 (June 1975).
14. W. J. Ross, Babcock & Wilcox, personal communication, Aug. 6, 1975.

15. B. L. Vondra, ORNL, personal communication, Aug. 6, 1975.
16. M. Walling, Kerr-McGee Corp., personal communication, Aug. 7, 1975.
17. J. H. Goode, C. L. Fitzgerald, and V. C. A. Vaughen, *The Dis solution of Unirradiated and Irradiated $(U,Pu)O_2$ in Nitric Acid*, ORNL-5015 (February 1975).
18. C. A. Burgess, HEDL, personal communications, Dec. 13, 1974, Aug. 6, 1975, and Aug. 12, 1975.
19. R. A. Bradley, ORNL, personal communication, Dec. 9, 1974.
20. R. E. Lerch, *Dissolution of Unirradiated Mechanical Blended, Sol Gel and Coprecipitated Mixed Oxide Fuel*, HEDL-TME-72-67 (June 1972).
21. George Untulis, Lindberg Division, Sola Basic Industries, personal communications, Sept. 19, 1975, and Mar. 9, 1977.
22. RDT Standard, "Fast Flux Facility Ceramic Grade Plutonium Dioxide," RDT E 13-1.
23. V. Panesco, Atlantic Richfield Hanford Co., personal communication, Aug. 5, 1975.
24. M. G. Bale, Westinghouse Corp., personal communication, July 28, 1975.
25. R. W. Sloat, General Electric Co., Vallecitos, Calif., personal communications.
26. *Westinghouse Cheswick Site Fuel Development Laboratories Environmental Report*, September 1974.
27. D. S. Webster et al., Argonne National Laboratory (ANL), *Chemical Engineering Division Fuel Cycle Technology Quarterly Reports*, ANL-7735, -7755, -7767, -7799, -7841, -7871, and -7902.
28. M. J. Barr et al., *Characterization of Some UO_2 and PuO_2 Powders*, BNWL-1441 (July 1970).
29. R. E. Felt, *Equipment for the Direct Calcination of Plutonium*, RL-SEP-674 (December 1965).
30. N. M. Levitz, ANL, personal communications, Sept. 20, 1974, and Sept. 25, 1974.
31. M. J. Szulenski, "Development of an Agitated Trough Continuous Calciner," *Chem. Eng. Prog.* 53: 586-89 (1957).
32. *Generic Environmental Statement Mixed Oxide Fuel*, WASH-1327 vol. 3, Chap. IV (August 1974).

6. A SUGGESTED CRITERIA FOR ACCEPTABLE AMOUNTS OF INSOLUBLE PuO_2 IN FUEL

Personnel associated with fuel fabrication have occasionally expressed the opinion in the past and during this investigation that they are not overly concerned about fuel reprocessing losses due to PuO_2 insolubility problems, since the reprocessor normally has rather large plutonium losses in spite of efforts to keep these losses at a minimum. Therefore, a loss of a few percent of the PuO_2 external to the fuel fabrication process is not of concern to the fuel fabricator. While plutonium losses at the only U.S. commercial fuel reprocessing plant have not been low thus far, there is ample evidence that these losses can be reduced considerably by applying available solvent extraction technology to new or modified plants. Development of an improved dissolver system, which is now being tested at ORNL, should eventually result in an additional reduction of reprocessing plant plutonium losses to the leached cladding. Total reprocessing plant losses in the future may be reduced to less than 0.1%; therefore, an insoluble PuO_2 loss of 0.1%, or possibly 0.01%, may be a significant part of the fuel cycle loss. A reasonable basis for establishing the acceptable limits for insoluble PuO_2 in irradiated fuel would be that the insoluble PuO_2 should not appreciably affect the total plutonium losses in a well designed and operated reprocessing plant. This basis will be established in this section by comparing reprocessing losses for the present and estimates for future reprocessing operations to establish the relative importance of "normal" reprocessing losses compared with losses that might occur with a fuel containing insoluble PuO_2.

Fuel reprocessing plant plutonium losses normally consist of losses due to incomplete leaching of nitric acid soluble fuel from the cladding, losses associated with fission product and other solids removed from the dissolver product to provide a clarified feed for the solvent extraction system, and losses associated with the operation of the solvent extraction system. Some research work suggests that inextractable plutonium may also limit the performance of the solvent extraction process. To the losses previously mentioned will be added any loss of

plutonium as nitric acid insoluble PuO_2 in the fuel if the fuel reprocessor does not take special steps to dissolve the PuO_2.

6.1 Nuclear Fuel Services Plant Experience

The Nuclear Fuel Services (NFS) plant processed more than 630 tons of irradiated fuel and recovered an overall average of 97.6% of the measured input of plutonium vs a contractural guarantee of recovery of 98.5% of the measured input.[1] Frequent equipment failures and other operating problems resulted in off-standard operating conditions with higher-than-normal losses. In one relatively trouble-free campaign, about 50 tons of Yankee Reactor fuel was processed with a recovery of 97.4% of the plutonium, with known losses of 1.42%.[2] The material unaccounted for (MUF) was about 1.4% of the measured plutonium input for this particular campaign, but was only 0.6% for the entire plant operating history.[3] The MUF for any particular campaign was highly affected by economic factors dependent on the customer's willingness to pay for additional plant operating time to wash out the system and reduce the MUF to low values. Improvements in accountability procedures (analytical chemical methods, tank calibration, etc.) are desirable to reduce the MUF, which should, in principle, be reducible to a very low value. The measured routine process losses were 0.1% to the leached hulls and 1.14% to the liquid waste for the Yankee fuel. It was estimated that 56% of the liquid waste losses was due to system upsets; the resulting off-standard raffinates were not recycled to avoid additional upsets. This estimate suggests that the plutonium loss in liquid wastes from solvent extraction might have been about 0.5% if good operating conditions had prevailed throughout the campaign. The total loss of input plutonium would have been about 0.6%, including an allowance of 0.1% for hull losses.

6.2 Hanford Purex Plant Experience

The chemical and equipment flowsheet last used in the Hanford Purex Plant has been described in a recent report.[4] Fuel decladding

was done by chemical dissolution, therefore decladding losses are not comparable to those for a shear-leach system. The solvent extraction system total losses were ≤0.002% of the uranium. The plutonium losses were normally at or less than the routine analytical limit of detection, which is equivalent to about a 0.02% plutonium loss.[5]

No evidence of inextractable plutonium was encountered, nor has such evidence been observed in small-scale tests for LMFBR reprocessing.[6] Inextractable plutonium in Purex raffinates at 0.8 ± 0.4 mg of plutonium per liter has been reported to be a phenomenon limiting the performance of solvent extraction.[7] Other researchers report an inextractable plutonium waste loss of about 0.2 mg of plutonium per liter of raffinate from a synthetic solution containing 2.5 g of plutonium per liter. Much lower residual plutonium levels were observed with lower initial plutonium concentrations.[8] Inextractable plutonium is more likely to be the result of improper feed preparation, for example, accidental plutonium colloid formation or some peculiarity of the particular solvent extraction system or experiment. Hanford Plant extraction raffinate normally was ≥17 times lower in plutonium content than the 0.8-mg/liter level ascribed to inextractable plutonium. Recent batch extraction experiments at ORNL with both LWR and LMFBR irradiated fuel resulted in the recovery of ≥99.995% of the plutonium; consequently, there is no chemical phenomena limiting extraction performance. It appears that ≥99.98% recovery of plutonium can be obtained in a well designed and carefully operated solvent extraction system. Process improvements in the Hanford Purex Plant, compared with the NFS extraction system, included a third solvent extraction cycle instead of anion exchange for final plutonium purification and backcycling of the second- and third-cycle aqueous raffinate into the first extraction column; therefore, there was, in effect, only one solvent extraction column waste stream leaving the entire plant. The backcycling of both solvent and aqueous raffinates is an important process improvement, since second and third cycles can be optimized for high decontamination; any losses due to this optimization or due to minor upsets and day-to-day variations in performance can be recovered. Operating control of the system and equipment performance was also improved

compared with the NFS system. Planned improvements for the NFS plant[1] and the process flowsheet proposed for the Allied General Nuclear Services (AGNS) plant[9] will incorporate some but not all of the preceding features. It is not possible to predict how much these improvements will decrease process losses in commercial plants. If the systems were optimized for maximum plutonium recovery, losses of ≤0.05% should be routinely attainable for future LWR and LMFBR fuel reprocessing plant solvent extraction systems.

6.3 French AT.1 Fast-Reactor Fuel Reprocessing Pilot Plant Experience

French researchers report achieving 99.96% plutonium recovery for three cycles of solvent extraction in the AT.1 pilot plant at La Hague using highly irradiated fuel from the Rapsodie Fast Reactor.[10] Aqueous raffinate backcycling was not used, therefore losses might have been lower if second- and third-cycle raffinates had been backcycled. This is additional evidence that low-loss commercial reprocessing extraction processes should be attainable, even with highly irradiated fuel. These results provide additional evidence that inextractable plutonium was an artifact of the particular system in which it occurred[7] rather than an unavoidable solvent extraction property of plutonium.

6.4 Leached Cladding Losses

6.4.1 LWR fuels

Plutonium losses to the leached hulls were determined at NFS by analyzing grab samples of the leached cladding. The results varied considerably from one hull batch to another due to the difficulty of getting representative samples; however, it was established that the hull losses were about 0.1%.[1,2] The methods for following the cladding losses thereafter involved comparing the weight of the leached cladding with the theoretical weight of the fuel assembly tubing and hardware. As long as the leached cladding weight did not exceed the theoretical weight, a 0.1% loss was assigned to the cladding as leaching loss.

Losses were usually caused by fuel rod end pieces with one end closed. It is thought that losses would be less than 0.1% if it were not for these end pieces.[11] Experiments at ORNL have shown that incomplete leaching of the end pieces occurs when the end pieces are oriented with the open end pointing down.[12] Thus, dissolvers with static beds of sheared fuels, such as the NFS and AGNS types, will have an unavoidable loss of plutonium (and uranium) to the leached hulls unless the fuel rod ends are cut into impractically short pieces so that the "diving bell" effect that prevents complete leaching of some fuel rod ends is nonexistent. The General Electric Midwest Fuel Recovery Plant (MFRP) vibrating-tray continuous dissolver was designed to circumvent the sheared fuel leaching orientation problem by conveying the rod segments in a horizontal position through the leacher. A plutonium and uranium loss of 0.01 to 0.1% was expected based on cold testing the vibrating-tray dissolver with unirradiated UO_2.[13]

The lower limit of losses to the leached cladding was established by leaching Zircaloy-2-clad PWR-1 (Yankee Reactor) UO_2 blanket rods with an NFS-type leaching cycle under carefully controlled conditions.[14] The cladding retained 0.0005% of the plutonium or about 3 μg of plutonium per gram of Zircaloy cladding. Recent experiments at ORNL with spent LWR fuel gave cladding losses of about 0.001% of the plutonium,[15] and the cladding retained about 0.1% of the fission products. This retention of fission products by the cladding is about what would be expected due to fission recoil effects. The fission products trapped by the cladding may make it difficult to determine plutonium losses of less than 0.1% to the cladding if the clad-plutonium-loss monitoring method is based on detecting ^{144}Pr that would be present in undissolved fuel residues.

Fuels containing PuO_2 difficult to put into solution may incur an additional loss of plutonium over that due to incomplete chemical leaching of the sheared fuel. If the fuel contains a dispersion of PuO_2 particles that are not completely soluble in the dilute nitric acid dissolvent, then a large fraction of these dense particles may be trapped in the leached clad by the packed-bed filter effect. Tests were made to evaluate this problem for LMFBR fuel.[16,17] The test results should

be equally applicable to LWR PuO_2 recycle fuel. (See Appendix B for test details.) Based on the results of these tests, it is assumed that ≥80% of the insoluble PuO_2 particles will be retained by the cladding in NFS- and AGNS-type dissolvers.

Fissionable material loss to the leached cladding from LWR fuels for current LWR fuel dissolvers will be from 0.01 to 0.1%, depending on the size of the sheared pieces and the effectiveness of the rinsing operation. For an ideal situation the loss should be ≤0.001%. If insoluble PuO_2 particles are present, ≥80% of the particles will probably remain with the cladding in conventional-type leacher-basket dissolvers.

6.4.2 LMFBR fuels

Only hot-cell data are available in the United States for estimating the loss of plutonium to LMFBR leached cladding. Compared with LWR fuel, the following generalizations are made about LMFBR fuel: The LMFBR fuel rods are smaller in diameter; thus, leaching may be slower unless the fuel can be sheared into very short lengths having length-to-diameter ratios comparable to that used for LWR fuel leaching (L:D = 1.1 to 5). Partial end closure by clad pinching during shearing is more difficult to prevent in shearing LMFBR fuel, and this pinching may have a correspondingly greater adverse effect in leaching the smaller diameter rods. If leaching losses are assumed to be proportional to the number of rod end pieces per unit weight of fuel, then the percentage leaching losses of both uranium and plutonium for irradiated LMFBR fuel would be seven times that for LWR fuel. However, this potential increase in plutonium loss is almost completely counteracted for LMFBR fuel by the much lower plutonium content of the axial blankets (about one-sixth as much plutonium per unit rod length as the average value for the whole rod). The effect of the fuel rod end pieces on plutonium loss may be about the same for LMFBR fuel assemblies as that for LWR fuel in dissolvers of conventional design. This line of reasoning appears to be confirmed by comparing the NFS light-water reactor fuel reprocessing[2] and AT.1 fuel reprocessing experience with sizeable amounts of Rapsodie

Fast Reactor fuel.[18] Leached cladding plutonium losses were less than 0.1% for Rapsodie fuel in a static-bed dissolver that was a small-scale version of the NFS dissolver. Uranium losses to the leached cladding should be about seven times the plutonium losses (percentagewise) for fast-reactor fuel reprocessing, but data are not available.

Hot-cell experiments have shown that the average loss of plutonium from 25% plutonium FFTF-type fuel irradiation test capsules to leached cladding ranged from 0.001 to 0.007% with leaching in 8 *M* HNO_3 for leaching times of practical interest (i.e., 4 hr or less). Cross contamination may have affected these results; in well controlled 2- to 4-hr leaching experiments, the clad loss was reduced to an average of 0.00006% of the plutonium, or about 0.5 μg of plutonium per gram of stainless steel cladding.[19]

As previously discussed for LWR plutonium recycle fuels, ⩾80% of any nitric-acid-insoluble PuO_2 particles in LMFBR fuels will be retained by the cladding in conventional basket-type dissolvers* and will add to the losses due to incomplete chemical leaching (Appendix B). These special problems of leaching LMFBR fuels have been considered in the LMFBR fuel reprocessing development program at ORNL and have resulted in a concept for a rotary, countercurrent, continuous dissolver[16,17,20] being developed now (Appendix A). Scouting experiments with a small-scale model of the rotary dissolver showed that simulated PuO_2 solids could be completely separated from the cladding (Appendix B). The tumbling imparted to the sheared fuel bed during leaching will facilitate separation of finely divided solids from the cladding, from the leaching of end pieces, and from thorough rinsing of the cladding that should be superior to any previous dissolver. Countercurrent rinsing calculations indicate that a few rinse stages will reduce the dissolved heavy metal

---

*Shearing experiments (May 2, 1975) using an embrittled type 446 stainless-steel-simulated fuel assembly to imitate irradiation embrittlement effects on stainless steel fuel assemblies showed that considerable shattering of fuel tubes occurred during shearing. The resulting packed bed of broken cladding would lead to less favorable conditions for the removal of fine insoluble PuO_2 solids from the cladding. It is likely that ⩾80% of the PuO_2 fines would be retained by the cladding in basket-type dissolvers.

content of the hulls to a very low value.[20] This dissolver, if successfully developed, should closely approach the best laboratory leaching results for both LWR and LMFBR reprocessing plants.

Plutonium loss to the leached LMFBR cladding for dissolvers similar to current LWR fuel reprocessing types will be from 0.01 to 0.1%. In addition, if insoluble PuO_2 particles are present in the fuel, $\geqslant$80% of the PuO_2 particles will probably remain with the cladding. If the rotary dissolver is successfully developed, then the total plutonium loss to the leached hulls from both soluble and insoluble fuel residues could be $\leqslant$0.001% for routine operation with cleanly cut sheared fuel.

6.5 Losses to Insoluble Solids in the Dissolver Product

Insoluble solids are present in the dissolver product. These solids, depending on the particular dissolver system and fuel type (UO_2 or PuO_2–UO_2), may include (1) small fragments of fuel cladding, (2) finely divided noble metal fission products, (3) precipitates from the hydrolysis of metastable fission products such as zirconium in low-acidity solutions,[8] and (4) insoluble PuO_2 particles. In addition to the potential problem of the loss of fissionable material, the removal of solids from the dissolver product is a process option, probably highly desirable but to a certain extent dependent on how tolerant the processing system is to the problems of line plugging and the accumulation of radioactive solids in head-end vessels and in the first solvent extraction contactor.

Line plugging in the feed system to solvent extraction and deposits of highly radioactive solids in head-end vessels were problems at NFS.[11] No method was available for removing solids from the feed solution other than a strainer to retain the larger fragments of cladding. The finely divided material passed through the pulsed-column solvent extraction system with no apparent ill effects. The available plant data indicate that these solids probably were not associated with a process loss.[11] The MFRP planned to send these solids through the pulsed-column solvent extraction system and did not anticipate a loss from this procedure.[13] The AGNS plant will include a head-end centrifuge to remove solids to prevent their accumulation in the centrifugal contactor used for the

first-cycle extractor. Centrifugal contactors are less tolerant of solids in the feed than pulsed-column contactors. Thus, a determination of the losses associated with the insoluble head-end solids on a plant scale will be possible in the AGNS plant. These solids and their potential for causing a fissionable material loss are discussed in the following paragraphs.

Cladding fragments are generated by the shearing process. The amount produced is relatively small for ductile cladding; however, a much larger amount has been observed when shearing embrittled material intended to simulate the negligible ductility of highly irradiated LMFBR cladding. In addition, oxides, and what appeared to be fine metal powder resulting from clad corrosion prior to and during dissolution, have been observed with LWR Zircaloy and stainless-steel-clad fuels[11] and with Rapsodie Fast Reactor fuel.[21] These materials originating from the cladding should not result in a fissionable material loss other than what might result from incomplete washing of these solids as they are removed from the dissolver product.

Insoluble noble metal fission products (Mo, Ru, Tc, Rh, and Pd) are present in high burnup fuels.[10,18,22-26] The amount of this material varies from about 4 to 5 kg/ton at 25,000 MWd/ton to about 20 kg/ton at 80,000 to 100,000 MWd/ton burnup[26] and is composed of very fine metallic particles — 50 wt % 8 to 20 μm and 50 wt % 3 to 8 μm or less.[27] Other fission products such as Zr, Nb, Sb, and Sn are present as solids, presumably as oxides.[27] Most workers report that no uranium or plutonium appears to be present in these particles.[18,21-23,27] However, French researchers report small amounts of uranium and plutonium in these solids.[10] They found the fission product solids to be very small particles (less than 0.5 μ). The reason for the much smaller particle, compared with that observed by U.S. workers, is not known. The smaller particle may be due to the high degree of homogeneity of the Rapsodie fuel (as evidenced by complete dissolution), resulting in less localized accumulation of fission products at PuO_2-rich particles. The smaller particles may also be due to the possibility that the reactor irradiation conditions may be milder and less favorable for fission product migration and coalescence than in the small-sized fuel test capsules generally used by U.S. workers.

If these solids are removed from the dissolver product, losses in the filter or centrifuge cake will be determined by the efficiency of the cake-washing method; these losses should be very low ($\leqslant$0.01%) in a well designed clarification system.

Insoluble PuO_2 particles will be present in the dissolver product if the LWR plutonium recycle fuel and the LMFBR fuel has been manufactured in such a manner that the fuel pellets are not completely soluble in 6 to 8 *M* HNO_3 or, more realistically, soluble in dissolver product solution. The dissolution rate of PuO_2 particles is impractically slow in either case,[28] and practical dissolution of these particles requires the use of fluorides. If fluorides are not used, the PuO_2 particles not held with the cladding will be present in the dissolver product and will be lost to the waste system.

In summary, losses of plutonium to insoluble solids present in the dissolver product should be very low ($\leqslant$0.01%) if insoluble PuO_2 is not present in the fuel. If insoluble PuO_2 is present, plutonium will be lost with the cladding and with finely divided solids if special steps (using fluorides) are not taken for dissolution.[20]

6.6 Solvent Extraction System Losses

The Purex process should be inherently capable of reducing process losses to a negligible quantity, as noted in Sect. 6.2. Limited development work has shown that this conclusion is not significantly altered when processing fuels have an activity level equivalent to 30-day-cooled LMFBR fuel.[6] The solvent extraction system loss of uranium and plutonium in a well designed and operated plant should be $\leqslant$0.05% for future LWR and LMFBR fuel reprocessing.

6.7 Other Losses

Fissionable material losses may occur as a result of equipment decontamination, the discard of analytical laboratory wastes, and spills. These materials are recycled if significant amounts of material are involved. Waste streams from operations such as the conversion of

products to solids are customarily recycled and represent no net loss. Low-level solid-waste losses are usually very small. In general, the total loss from all the preceding sources is low. Quantitative analysis methods and plant instrumentation should be improved to generally decrease the "material unaccounted for" problem throughout the whole reprocessing plant and to improve the accuracy of measurement for waste streams containing very-low-content fissionable material.

6.8 Summary of Reprocessing Plant Losses and Suggested Criteria for Acceptable Amounts of Insoluble PuO_2 in Fuel

Table 6.1 summarizes the reprocessing plant plutonium loss information presented in the preceding discussion and also presents estimates for what might be achieved in advanced-design LWR and LMFBR fuel reprocessing plants scheduled to be operating in the next few years. Highly irradiated fuel should not affect these totals significantly.[10] If insoluble PuO_2 is present in the fuel and if fluorides are not used to dissolve the PuO_2, all the insoluble PuO_2 will be lost. Excluding losses from insoluble PuO_2 in the fuel, it is estimated that the advanced-design fuel reprocessing plant should be capable of operating with total plant plutonium losses of $\leqslant 0.061\%$, exclusive of any losses due to insoluble PuO_2. Losses this low would also be highly compatible with all the objectives listed in Sect. 4 of this report. Some examples are:

1. Only soluble plutonium would be present in the plant and the high-level-waste system. Criticality hazards due to insoluble PuO_2 accumulation would be significantly reduced. Total plutonium accumulation in a full high-level-waste tank would be $\leqslant 100$ kg from LMFBR fuel, all in a soluble, readily poisoned form.
2. The long-term toxicity of high-level wastes and of the cladding due to plutonium would be reduced to low values.
3. Uranium resource utilization would be very high, and the doubling time for LMFBRs would be minimized.

If insoluble PuO_2 is not to be an impediment in reprocessing, it must add no more than 0.01% to the expected advanced reprocessing plant

Table 6.1. Summary of reprocessing plant plutonium losses

Source of loss	Hot-cell testing results	Plutonium production plant results	NFS–LWR reprocessing results	LWR UO_2 and PuO_2 recycle reprocessing projected performance[a]	LWR and LMFBR advanced reprocessing projected performance[b]
Cladding discarded to waste after shear-leach step	0.0005% for Zircaloy-2-clad UO_2; 0.00006% for stainless-steel-clad FFTF fuel	Not applicable	∿0.1%	0.01 to 0.1% plus ≥80% of the insoluble PuO_2 if fluorides are not used in the primary dissolver	≤0.001% for advanced-design rotary dissolver
Clarification of the solvent extraction feed and discard of the solids	≤0.01% for thoroughly washed residues from highly soluble fuels	Not applicable	Not applicable	≤0.01% plus ≤20% of the insoluble PuO_2 if fluorides are not used	≤0.01% plus all of the insoluble PuO_2 if fluorides are not used
Solvent extraction system wastes	0.04% for Rapsodie Fast Reactor fuel	≤0.02% plutonium and ≤0.002% uranium with advanced back-cycle flowsheet	1.14% previously; 0.5% if good operating conditions are maintained	0.1 to 0.5% depending on the effectiveness of the partial back-cycle flowsheet	≤0.05% with advanced back-cycle flowsheet
Total system loss	Not applicable	Not applicable	∿0.6% for good operating conditions	≤0.12 to ≤0.61% plus all the insoluble PuO_2 if fluorides are not used for dissolution	≤0.061% plus all the insoluble PuO_2 if fluorides are not used

[a]Assumes that dissolvers similar to current LWR fuel dissolvers are used, that a feed clarification system with efficient washing of the solids is provided, and that a partial backcycle solvent extraction flowsheet is used (modified NFS and AGNS plant configurations).

[b]Assumes that advanced rotary dissolvers are used, that a feed clarification system with efficient washing of the solids is used, and that a complete backcycle solvent extraction flowsheet is used.

plutonium loss of ≤0.06% during the processing of irradiated fuels. Credit should be allowed for improved fuel solubility brought about by irradiation to the design burnup of the fuel. A conservative value for the improvement in fuel solubility due to irradiation seems to be 10. This value is based on the extremely limited amount of available data for fuel classified as "good quality fuel" before irradiation.

Insoluble plutonium in unirradiated fuel should be ≤0.1% of the total amount of plutonium present as determined by a dissolution test procedure that accurately simulates the relatively mild reprocessing plant dissolution conditions. Fuel to be manufactured in the immediate future should meet this criteria, subject to resolution of the exact improvement in solubility caused by irradiation.

An additional restriction is required to ensure the high solubility of irradiated fuel. It will be necessary to specify the maximum PuO_2 particle size, and perhaps the size distribution of the dissolution residue from unirradiated fuel, to be sure that the PuO_2 is sufficiently dispersed so that irradiation will reduce the insoluble residue to ≤0.01%. Data are not currently available to quantify this additional requirement.

The dissolution test for determining the amount of insoluble PuO_2 in fuel must be based on a test that is representative of reprocessing plant dissolver conditions. It is suggested that the test consist of dissolving the sample for 2 to 3 hr in enough boiling 7 *M* HNO_3 to produce a solution containing 1.2 to 1.5 *M* heavy metal if all the sample dissolves. Any solid residue would be separated and leached again in 7 *M* HNO_3 for 2 to 3 hr. Any plutonium in the solid residue from the second leach would be defined as insoluble PuO_2.

REFERENCES FOR SECTION 6

1. *Safety Analysis Report — Nuclear Fuel Services Reprocessing Plant, West Valley, N.Y.,* Docket No. 50-201.
2. U.S. Atomic Energy Commission, Savannah River Operations, Fuel Reprocessing Branch, *Reprocessing of Yankee Reactor Fuel at Nuclear Fuel Services, Inc., West Valley Facility,* SRO-124 (Oct. 21, 1968).
3. J. R. Clark, NFS, personal communication, Feb. 4, 1977.
4. K. H. Henry, *Purex Chemical Flowsheet for Processing N Reactor Fuels,* ARH-2362 (June 27, 1972).
5. G. A. Nicholson, Atlantic Richfield Hanford Co., personal communication, Nov. 14, 1974.
6. G. L. Richardson, *The Effect of High Solvent Radiation Exposures on TBP Processing of Spent LMFBR Fuels,* HEDL-TME-73-51 (June 1973).
7. W. Ochsenfield et al., *Aqueous Reprocessing of Fast Breeder Reactor Fuel Elements: Common Extraction and Separation of Macroquantities of Plutonium and Uranium in the Purex Process,* EURFNR-888 (October 1970).
8. M. H. Lloyd, *Chem. Technol. Div. Annu. Prog. Rep. Mar. 31, 1975,* ORNL-5050 (October 1975), p. 31.
9. *Allied General Nuclear Services Final Safety Analysis Report,* Barnwell Nuclear Fuels Plant, Docket 50-332.
10. J. C. Boudry and P. Miquel, "Adaptation of the Purex Process to the Reprocessing of Fast Reactor Fuels," Paper 253, CEA-CONF-2906, *Proc. Int. Solv. Extn. Conf. Lyon, France, Sept. 8-14, 1974.*
11. J. P. Duckworth, Nuclear Fuel Services, personal communications, Aug. 23, 1973, and July 11, 1975.
12. W. E. Unger et al., *Aqueous Fuel Reprocessing Quarterly Report for Period Ending March 31, 1973,* ORNL/TM-4240 (June 1973), pp. 22-24.
13. Galen Winsor, General Electric Co., Midwest Fuel Recovery Plant, personal communication, June 12, 1974.
14. J. H. Goode and V. C. A. Vaughen to D. E. Ferguson, personal communication, Dec. 10, 1970.

15. D. O. Campbell, ORNL, personal communication, Feb. 1, 1977.
16. W. E. Unger et al., *Aqueous Fuel Reprocessing Quarterly Report for Period Ending December 31, 1973*, ORNL/TM-4488 (June 1974), pp. 18-25.
17. W. E. Unger et al., *Aqueous Fuel Reprocessing Quarterly Report for Period Ending March 31, 1974*, ORNL/TM-4587 (September 1974), pp. 37-40.
18. P. Miquel, CEA, France, "Problems Poses Par Le Comportement et le Confinement Des Produits de Fission au Cours du Traitement Des Combustibles de Sugenerateurs," in Management of Radioactive Wastes from Fuel Reprocessing, OECD Paris Symposium, 1972.
19. J. H. Goode, personal communication, Apr. 4, 1975.
20. A. R. Irvine and E. L. Nicholson, *LMFBR Fuel Reprocessing, An Evaluation of Process Options for a 5-Ton/day Commercial Plant* (in press).
21. X. Talmont and P. Miquel, "First Experiments on the Processing of Breeder Fuels in France," IAEA Panel on Reprocessing Highly Irradiated Fuels, Vienna, Austria, May 27-30, 1969.
22. Brammam et al., *Metallic Fission Product Inclusions in Irradiated Oxide Fuel*, TRG Report 1582(D).
23. Argonne National Laboratory, *Chemical Engineering Division Annual Report 1970*, ANL-7775 (April 1971).
24. J. H. Goode to C. D. Scott, personal communication, Nov. 7, 1973.
25. G. Lefort, CEA (France) to R. E. Blanco (ORNL), personal communication, Nov. 23, 1972.
26. A. Chesne, CEA (France) to E. L. Nicholson (ORNL), personal communication, Feb. 7, 1975.
27. J. H. Goode et al., *The Dissolution of Unirradiated and Irradiated* $(U, Pu)O_2$ *in Nitric Acid*, ORNL/TM-5015 (February 1975).
28. A. L. Uriarte (Spain) and R. H. Rainey, *Dissolution of High-Density* UO_2, PuO_2, *and* UO_2-PuO_2 *Pellets in Inorganic Acids*, ORNL-3695 (April 1965).

Appendix A

REPROCESSING PLANT FUEL DISSOLUTION SYSTEMS — EXISTING LWR FACILITIES AND CONCEPTUAL SYSTEMS FOR LMFBR AND LWR PLUTONIUM RECYCLE FUELS

A.1 Nuclear Fuel Services, West Valley, New York

Nuclear Fuel Services (NFS) recently announced that they would cease fuel reprocessing. The following paragraphs describe the existing plant and planned modifications prior to the termination announcement.

The NFS plant dissolves the fuel in batch dissolvers (Fig. A.1) that hold six 8-in.-diam by 7-ft-long perforated baskets containing fuel that has been sheared into short pieces.[1] Hot 6 to 8 *M* HNO_3 is added to the dissolver, and the sheared fuel is dissolved in a few hours. The dissolver product is transferred to the feed adjustment system, the hulls are rinsed, removed from the dissolver, sampled, and packed in drums for disposal. Losses with the hulls are about 0.1%.[2] Losses would be much lower, perhaps 0.01% or less, except for the end pieces that are open for leaching at only one end.[3] When the end pieces are 3 to 4 in. long, roughly 1 in 50 will have undissolved fuel in it after leaching. The dissolver product is not clarified; therefore, finely divided solids in the dissolver product eventually pass through the first solvent extraction column with the solvent extraction system waste. The pulse column operated satisfactorily with solids in the feed. Feed-line plugging and high radiation levels in tank bottoms have been caused by local accumulations of solids. High radiation levels have been a problem only when repairs have been made. Plant modification plans tentatively include the installation of a feed clarification system. Details of the system are not available.

The dissolver is constructed of type 304L stainless steel. Fluoride was used in the dissolver (in one campaign only) as a catalyst for dissolving thorium-uranium oxide fuel clad with stainless steel. However, the fluoride was complexed by aluminum in the dissolvent before use to reduce dissolver and process evaporator corrosion to acceptable levels. High-level waste from all fuel, other than the UO_2–ThO_2 campaign,

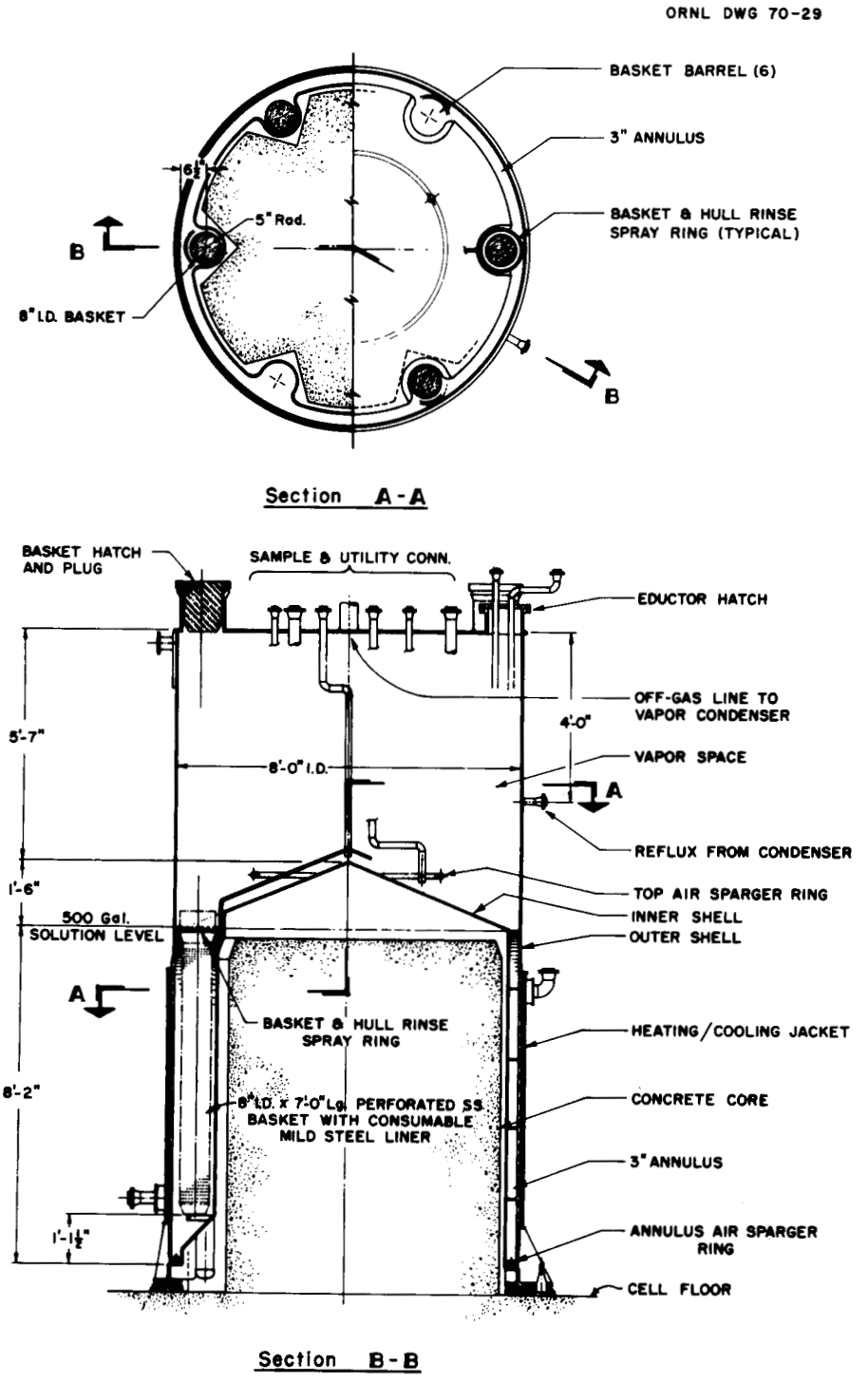

Fig. A.1. Batch dissolver used at the Nuclear Fuel Services Plant.

has been neutralized after recovery of the nitric acid and stored in carbon steel tanks. All future high-level waste was to be stored as acidic waste in stainless steel tanks and eventually converted to solids.

Processing LWR PuO_2 recycle fuel that was fully soluble in plant-strength nitric acid would be no different than processing UO_2 fuel. Several problems would be encountered with the existing dissolver if the fuel contained nitric-acid-insoluble PuO_2. Corrosion of the 304L stainless steel dissolver would be excessive if fluorides are used, and the Zircaloy cladding would preferentially react with fluoride if it were present. Therefore, a special fluoride-resistant primary dissolver would not necessarily ensure PuO_2 dissolution unless a large amount of the cladding was dissolved. If the existing dissolver is used with pure nitric acid, PuO_2 sludges could accumulate in the equipment, giving rise to a criticality problem; also, a large amount of the PuO_2 could remain with the leached cladding (Appendix B). Thus, post-primary dissolution treatment of the dissolver product with fluoride to dissolve the PuO_2 would not give complete recovery. Fluorides, even if complexed after PuO_2 dissolution, would subject the high-level-waste evaporation, the acid recovery system, the high-level acidic waste storage tanks, and the waste solidification system to accelerated corrosion attack.

Other than the inability to attain complete leaching of fuel rod ends and to wash the cladding free of PuO_2 solids, the outstanding drawback of this dissolver is that it is a batch dissolver with typical problems of reaction rate control and surges in off-gas evolution, leading to off-gas treatment system complications. Mechanically speaking, it is a simple, reliable system.

A.2 Midwest Fuel Recovery Plant, Morris, Illinois

General Electric Co. recently announced that the Midwest Plant was inoperable as designed. It is unlikely that this plant will ever be operated with irradiated fuel. The following information describes the dissolution system.

The Midwest plant has a semicontinuous dissolver system[1] with a 1-ton/day capacity (Fig. A.2). Fuel assemblies are dismantled into

ORNL DWG. 70-12441

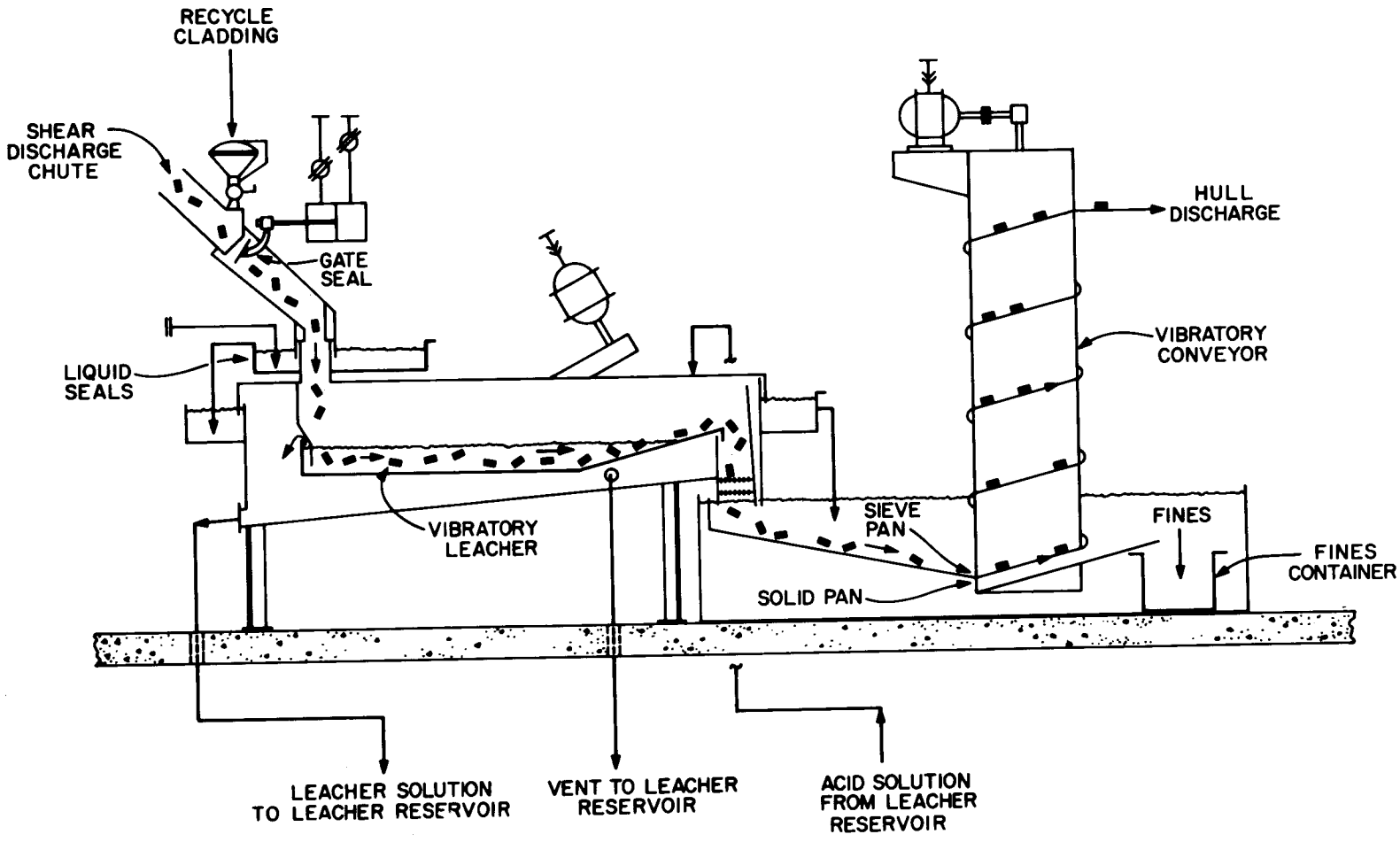

Fig. A.2. Continuous leacher and cladding conveyor at the Midwest Fuel Recovery Plant.

individual fuel rods, chopped into 3-in.-long pieces, and fed to the horizontal-slab vibrating-tray dissolver. The tray is about 18 in. wide by 10 ft long and holds a 4-in. depth of solution. The chopped pieces are slowly conveyed by vibratory oscillation as a single layer of horizontal pieces through the hot 8 *M* HNO_3, thus ensuring thorough leaching of all pieces, including the rod ends. The dissolvent is recirculated from a reservoir through the tray, and sheared fuel is fed to the vibratory tray until a 1-ton batch of dissolved fuel has accumulated in the reservoir. The reservoir has an annular geometry topping tank in the upper part through which the solution from the vibratory dissolver flows before entering the reservoir proper. The annulus provides residence time in a safe geometry so that any particles of UO_2 in the leacher overflow will dissolve before entering the main reservoir. Leached cladding is drained, rinsed, and continuously conveyed to a scrap monitoring station by a spiral vibratory conveyor. Cladding losses were expected to be 0.01 to 0.1%.[4] The dissolver solution is not clarified, and any solids eventually pass through the solvent extraction system to the high-level waste.

The washing action on the cladding during dissolution and rinsing is relatively mild. Fine solids have been observed adhering to the rinsed cladding.[4] The use of fluoride in the head-end or any other place where the fluorides would enter the high-level waste is prohibited. Waste is calcined immediately and stored as a dry powder. The same material of construction limitations, Zircaloy cladding dissolution resulting from the use of fluorides, and general PuO_2 solids-handling problems encountered with the NFS plant apply to this system. The continuous operational feature of this dissolver is highly desirable for process control.

Satisfactory conveying of the sheared fuel through the tray of this dissolver requires a uniformly sized sheared fuel feed and orderly alignment of the pieces, with the long axis parallel to the tray centerline and direction of vibration. Otherwise, the pieces roll back and forth and do not convey properly out of the tray. It is questionable whether this dissolver concept can be used for LMFBR or LWR fuel in a

large-capacity plant because the required dismantling of fuel assemblies to individual fuel rods and rod shearing is likely to be too tedious. Whole-element sheared fuel will have a wide range of particle sizes ranging from fragments of cladding to large pieces of hexagonal duct (LMFBR fuel only) and clumps of sheared rods bound together by grids in both LWR and LMFBR fuel. This mixture will not convey satisfactorily through the dissolver system.

A.3 Barnwell Nuclear Fuel Plant, Barnwell, South Carolina

The Barnwell plant plans to dissolve the fuel in a continuous dissolver[1] with a 5-ton/day capacity (Fig. A.3). The complete dissolver system consists of three separate dissolver bodies connected to the shear by a rotary diverter that feeds sheared fuel to one dissolver barrel at a time. Each dissolver barrel is provided with a heat exchanger for controlling the temperature of the recirculating dissolvent and rinses and an airlift pumping system for returning fluid from the heat exchanger to the dissolver. Auxiliary tanks are provided for accumulating the solutions used for rinsing the cladding and for returning these fluids via airlifts in correct sequence to the next dissolver barrel. Each body is provided with a removable sheared fuel basket and is operated as a batch dissolver in a sequential fashion; therefore, the three-barrel unit is essentially a continuous dissolver. A continuous dissolver is preferred for better dissolution rate control, for uniform gas evolution resulting in better off-gas treatment, and for uniform product composition. The operation is carried out in three stages in each barrel: primary dissolution during which the sheared fuel and dissolvent is fed continuously to the dissolver barrel, a soak period in fresh acid to dissolve residual fuel after the shearing is terminated and all the product solution has been jetted from the barrel, and rinsing the cladding. Finally, the basket of leached cladding is removed and emptied. Any insoluble solids suspended in the dissolver overflow have a high probability of returning to the dissolver because of the high recirculation rate through the external heat exchanger and

ORNL DWG 74-10843

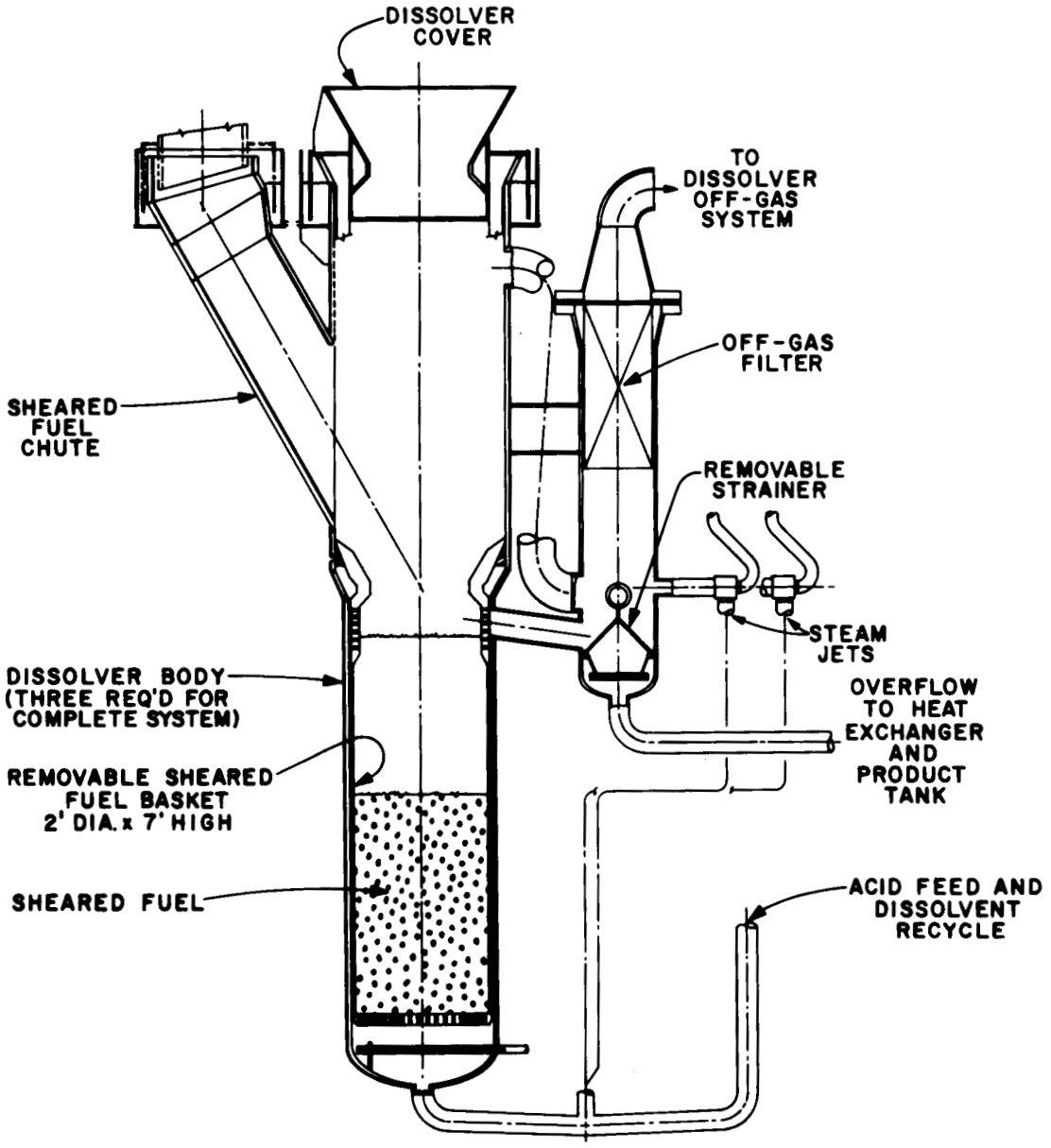

Fig. A.3. Barnwell Nuclear Fuel Plant dissolver. (Supplied through the courtesy of Allied General Nuclear Services.)

piping and the possibility of being filtered out on passage upward through the basket of sheared fuel cladding.

The initial acid strength in the dissolvent is about 8 *M* HNO_3, which quickly changes to the low-acidity, high heavy-metal-content product solution for the balance of the dissolution cycle. Thus, the usual dissolution rate tests made using a large excess of pure nitric acid, up to about 12 *M* in strength in the case of PuO_2–UO_2 fuel pellets, have little in common with realistic plant operating conditions. A centrifuge is provided to clarify the solvent extraction feed. It is planned to wash these solids and send them directly to the high-level waste. Fluorides will not be used in the head-end or in any other place where they would enter the high-level waste.

Insoluble PuO_2 in LWR recycle fuel would cause the same problems in this plant as in the NFS and MFR systems. A determination of the amount of insoluble PuO_2 in the dissolver product may be possible since the head-end clarification solids can be sampled. However, most of the PuO_2 solids will probably be retained by the cladding (Appendix B), just as in the NFS and Midwest systems. The cladding monitoring instrumentation should be able to detect the total plutonium loss in the cladding; however, the instrumentation will be unable to differentiate between a plutonium loss due to incomplete leaching of the fuel from the cladding or loss due to insoluble PuO_2. An additional monitoring problem will arise if fission products are selectively transferred to the cladding by fission recoil, leaving the bulk of the heavy metals behind. The monitoring system, based on detecting ^{144}Pr and the assumption that the heavy metal content of the leached cladding is proportional to the ^{144}Pr content, would be biased. This dissolver will also have a problem with incomplete leaching of rod end pieces.

A.4 Concepts for Dissolver Systems for Fuel Containing Insoluble PuO_2

The limitations of the existing dissolver systems described above for processing LWR UO_2 fuel and the additional requirements for dissolution of all the PuO_2 in LMFBR or LWR plutonium recycle fuel containing

insoluble PuO_2 can be used to formulate criteria for a two-step dissolver system capable of coping with insoluble PuO_2. Fluoride will be used to dissolve the PuO_2; however, as noted in Sect. 4, the use of fluoride is unlikely to be acceptable to fuel reprocessors. The criteria for the first dissolution step are:

1. Fluorides should not be used in the primary dissolver.
2. The primary dissolver should be capable of tumbling the sheared fuel and cladding in the presence of the dissolvent and/or the rinse solution so that thorough leaching and rinsing of the rod end pieces will occur; and PuO_2 fines, if present, will be removed from the cladding. Experiments have shown that simulated PuO_2 solids cannot be removed from static beds (baskets) of simulated leached cladding (Appendix B) and that tumbling in connection with countercurrent washing can remove the simulated PuO_2 solids from the cladding. While it would be possible to conduct the tumbling-solids removal operation in a separate vessel after primary dissolution in a static-bed dissolver, the problems of materials transport make it advisable to combine dissolution, PuO_2 solids removal, and clad-rinsing functions in one vessel.
3. Instrumentation must be provided to monitor the leached cladding for losses in the dissolver and in any other vessels in which significant accumulation of PuO_2 could occur. The instrumentation would detect any accumulation of PuO_2 before it presents a criticality hazard.

Equipment for dissolving sheared nuclear fuel was surveyed, and several concepts were considered for continuous dissolvers capable of complete leaching of the cladding, including rod end pieces, for LMFBR fuel.[1] Further study[5] resulted in the selection of the rotary drum, compartmented, countercurrent continuous dissolver for development (Fig. A.4). Preliminary experimental work with finely divided metal powders ($\leqslant$80 μm) indicates that the dissolver may be capable of completely removing PuO_2 solids from the cladding, provided these particles are $\ll$200 μm in size. Calculations indicated that the countercurrent rinsing of the cladding by the fresh nitric acid dissolvent to remove traces of

ORNL DWG 76-20325 R1

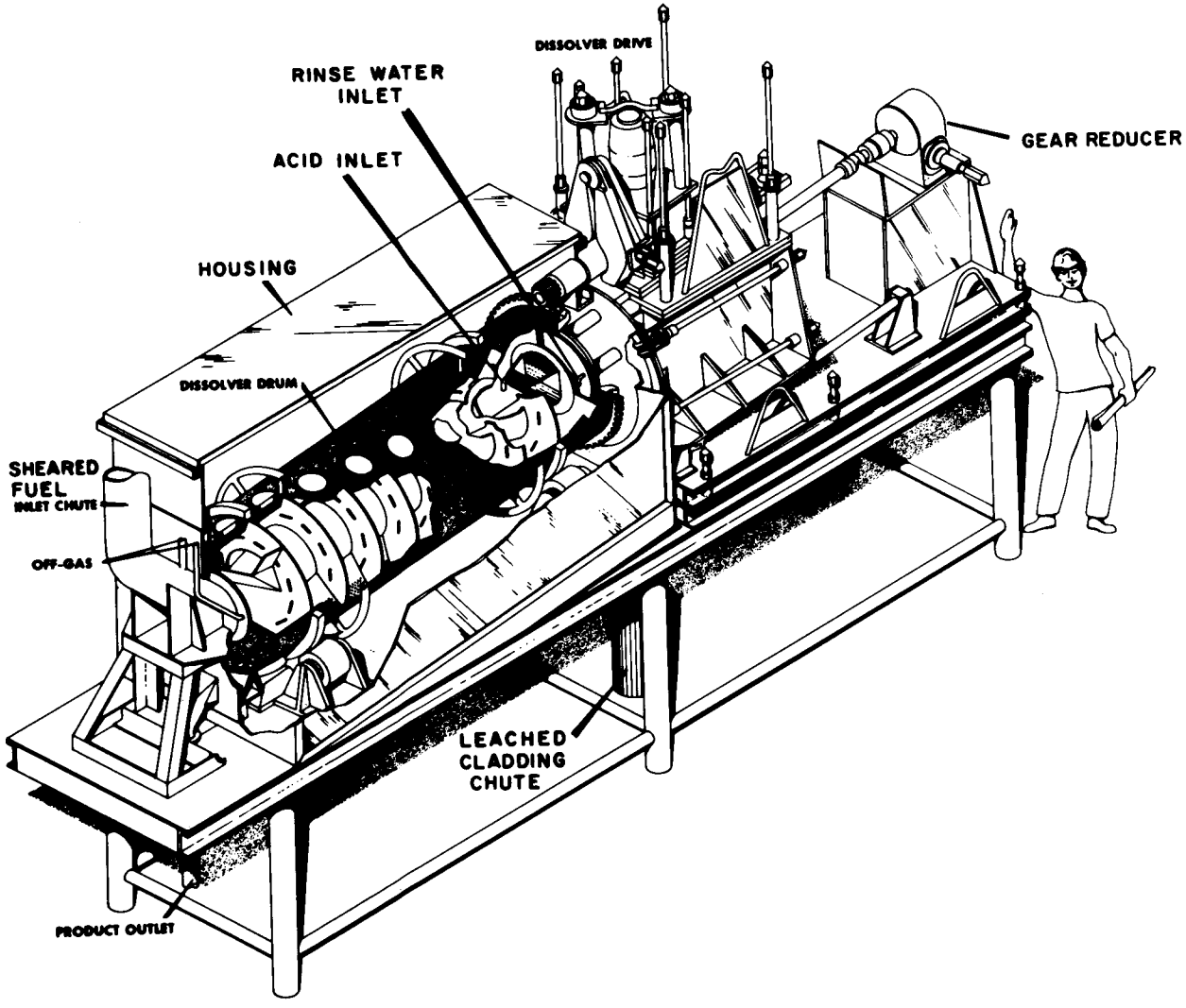

Fig. A.4. Rotary drum continuous dissolver.

solutes should be very effective. This dissolver would also be applicable to LWR UO_2 fuel and would have an important advantage over existing dissolvers in that it is fully continuous and should result in highly efficient removal of all fuel from the cladding, including the end pieces.

> "The rotary drum dissolver, as conceived for a 5-metric-ton/day reprocessing facility, would be comprised of a 120-cm-diam, ∿7-m-long cylinder that is divided into two end sections, eight dissolution chambers, and three rinse chambers. The sheared fuel and liquid depth would be about 6 in. in each compartment. This assumes a dissolution period of 4 hr and a rinse period of almost 2 hr. Current dissolution data with 1/2-in.-long pieces of fuel rod indicate that a 4-hr dissolution period is quite conservative, since adequate dissolution of these short pieces occurred in less than 1 hr to permit discharging heavy metal-free cladding. The requirements for countercurrent flow of liquids and solids is met by using transfer ducts and baffles between compartments, and by arranging the flow path for liquid such that little, if any, backmixing occurs."[5]

The sheared fuel transfer ducts (or scoops) between stages are designed so that the fuel is retained in the compartment as long as the drum rotates in the same direction. The reversal of the drum rotation for one revolution causes each scoop to pick up the sheared fuel in its compartment, drain it free of liquid, and transfer the cladding one stage toward the discharge end of the dissolver. Finely divided solids (PuO_2) are suspended in the liquid and carried out with the dissolver product solution. The illustration shows the supporting rollers and drum-drive system. These components are similar to standard items used on conventional rotary kilns. The rotary dissolver appears to be the only type of primary dissolver capable of ensuring that all the cladding, including end pieces, will be leached and rinsed very thoroughly with negligible fissile material loss due to either undissolved fuel or the presence of very finely divided insoluble PuO_2. However, before the concept can be used in a reprocessing plant, an extensive development and equipment testing program must be completed. The solution of the equipment development problem of the rotary dissolver will result in an improved dissolver for general application for both LWR and LMFBR fuel reprocessing. This dissolver concept is much more complicated than the

existing LWR fuel dissolvers previously described. The fuel reprocessing plant operators' conservative viewpoint on equipment reliability may favor retaining a thoroughly proven dissolver concept similar to the Allied General Nuclear Services design. The public utility company (reactor owner) has several choices: pay for the lost fuel values due to incomplete leaching and PuO_2 retention by the cladding in conventional dissolvers, pay extra reprocessing charges for an advanced rotary dissolver and a secondary dissolver system (with fluorides in the plant) and all that is required to recover insoluble PuO_2 and give very low cladding losses, or pay extra (and the extra is probably small) to the fuel fabricator to get fully soluble fuel. It is likely that the rotary dissolver would also be preferred for soluble fuel to reduce cladding losses to the lowest possible value and gain the benefits of a fully continuous dissolution operation.

Assuming that a primary dissolver capable of discharging the PuO_2 solids with the product solution exists, two methods are available for treating the primary dissolver product with fluorides to dissolve the suspended PuO_2:

1. Collection of the dissolver effluent in large, fluoride-resistant tanks and treating each batch with fluoride to dissolve the PuO_2. Clarification would be optional thereafter, depending on the requirements for demonstrating complete PuO_2 dissolution, possible problems due to the collection of insoluble fission products in pipelines and vessels, and whether the solvent extraction contactor can tolerate solids in the feed. The last consideration is probably the most important.
2. Clarification of the primary dissolver effluent by centrifuging to collect all the insoluble PuO_2 and other solids, then treating the solids with a small volume of nitric-hydrofluoric acid in small fluoride-resistant, secondary dissolver tanks to dissolve the PuO_2. Clarification of the secondary dissolver product would be optional for the same reasons given in (1) above.

After dissolution, the free fluoride and the fluoride in PuF^{3+} must be complexed with aluminum or zirconium (preferably) in equimolar or

greater quantities to minimize corrosion at normal temperatures and to guarantee complete extractability of the plutonium by the solvent extraction system. An additional corrosion inhibitor is required when raffinates are evaporated for acid recovery and when the high-level wastes are converted to solids.

REFERENCES FOR APPENDIX A

1. W. S. Groenier, *Equipment for the Dissolution of Core Material from Sheared Power Reactor Fuels*, ORNL/TM-3194 (April 1971).
2. U.S. Atomic Energy Commission, Savannah River Operations, Fuel Reprocessing Branch, *Processing of Yankee Reactor Fuel at Nuclear Fuel Services, Inc., West Valley Facility*, SRO-124 (Oct. 21, 1968).
3. J. P. Duckworth, Nuclear Fuel Services, personal communications, Aug. 23, 1973, and July 11, 1974.
4. Galen Winsor, General Electric Co., Midwest Fuel Recovery Plant, personal communication, June 12, 1974.
5. A. R. Irvine and E. L. Nicholson, *LMFBR Fuel Reprocessing: An Evaluation of Process Options for a 5-Ton/Day Commercial Plant* (in press).

Appendix B

TESTS TO DETERMINE THE EFFECTIVENESS OF REMOVAL OF SIMULATED PuO_2 SOLIDS FROM CLADDING[1-3]

Fine nickel powders (2.2 to 3.0 μm, 4 to 7 μm, and 30 to 35 μm) and lead powder (10 to 40 μm) were used to simulate the particle size and density of the insoluble PuO_2 residue and of the larger insoluble noble metal fission product nodules from such fuels. Weighed amounts of metal powder, to simulate the dissolution residue from LMFBR fuel containing 2% of the PuO_2 in a form difficult to put into solution, was dispersed in a deep bed of sheared empty 1/4-in.-OD LMFBR fuel tubing in a simulated leacher basket similar to that used in the NFS and AGNS plants. A simulated dissolution-clad washing sequence was performed using air sparging to simulate gas evolution during dissolution and to expand and "bump" the bed violently during the washing cycle to enhance removal of the solids from the cladding. This was a more vigorously agitated washing cycle than is used in plant operations. The amount of solids retained by the cladding was determined by dissolving the retained residue in acid and then analyzing. In general, the removal efficiency was very poor, with maximum removals of 21% for the finest metal powder down to an average of 3% for tests with the lead powder; the average removal for all kinds of powder from the cladding bed was only 11%. The experiments indicate that most of the finely divided, insoluble PuO_2 and the larger particles of insoluble noble metal fission products in both LWR plutonium recycle fuels and in LMFBR fuel will be retained by the cladding in conventional basket-type dissolvers.

Tests with a one-fourth-scale model of the rotary dissolver,[1,2] with the same metal powders as a stand-in for insoluble PuO_2, indicated that there was 99.7% removal of the lead powders from the rinsed cladding. Removal of nickel powders from the cladding was >99.9% effective.

Additional tests with the one-fourth-scale model dissolver[3] showed that 200- to 500-μm particles accumulate in the dissolver and are not carried out with the product solution or the cladding. Larger particles go with the cladding. Dissolution of fuels containing ⩾200-μm insoluble PuO_2 particles could result in PuO_2 accumulation in the dissolver or

losses with the cladding. The dissolver acts as a solids classifier for fine solids; full-scale dissolver tests are required to determine the size-cut point for fine solids entrained with the product or retained within the dissolver body. It is interesting to note that the maximum PuO_2 particle allowed in LWR fuel by the proposed ASTM homogeneity specification and the particles found in some of the first batches of FFTF fuel would, if not reduced in size by fuel irradiation, be large enough to be retained in the rotary dissolver.

REFERENCES FOR APPENDIX B

1. W. E. Unger et al., *Aqueous Fuel Reprocessing Quarterly Report for Period Ending December 31, 1973*, ORNL/TM-4488 (June 1974).
2. W. E. Unger et al., *Aqueous Fuel Reprocessing Quarterly Report for Period Ending March 31, 1974*, ORNL/TM-4587 (September 1974).
3. W. D. Burch et al., *LMFBR Fuel Recycle Program Progress Report for Period July 1 to December 31, 1975*, ORNL/TM-5477 (August 1976).

ORNL/TM-5903
Dist. Category UC-79c

INTERNAL DISTRIBUTION

1. R. E. Blanco
2. J. O. Blomeke
3. W. D. Bond
4. R. A. Bradley
5. R. E. Brooksbank
6. K. B. Brown
7-16. W. D. Burch
17. D. O. Campbell
18. J. M. Chandler
19. M. E. Clifton
20. R. M. Counce
21. D. J. Crouse
22. F. L. Culler
23. J. P. Drago
24. M. J. Feldman
25. D. E. Ferguson
26. L. M. Ferris
27. J. H. Goode
28. N. R. Grant
29. W. S. Groenier
30. D. C. Hampson
31. B. A. Hannaford
32. W. O. Harms
33. J. N. Herndon
34. W. D. Holland
35. A. R. Irvine
36. A. D. Kelmers
37. J. Q. Kirkman
38. B. E. Lewis
39. A. L. Lotts
40. J. C. Mailen
41. A. P. Malinauskas
42. L. E. McNeese
43. S. A. Meacham
44. J. P. Nichols
45-54. E. L. Nicholson
55. E. D. North
56. J. H. Pashley
57. F. L. Peishel
58. H. Postma
59. R. H. Rainey
60. J. E. Rushton
61. C. D. Scott
62. B. B. Spencer
63. R. G. Stacy
64. O. K. Tallent
65. D. B. Trauger
66. W. E. Unger
67. V. C. A. Vaughen
68. B. L. Vondra
69. C. D. Watson
70. B. S. Weil
71. T. D. Welch
72. M. E. Whatley
73. J. R. White
74. R. G. Wymer
75. O. O. Yarbro
76. S. Beard (consultant)
77. L. Burris, Jr. (consultant)
78. A. B. Carson (consultant)
79. E. L. Gaden, Jr. (consultant)
80. C. H. Ice (consultant)
81. W. H. Lewis (consultant)
82. R. B. Richards (consultant)
83. A. Schneider (consultant)
84. M. J. Szulinski (consultant)
85. J. S. Theilacker (consultant)
86. A. K. Williams (consultant)
87-88. Central Research Library
89. ORNL — Y-12 Technical Library
Document Reference Section
90-91. Laboratory Records
92. Laboratory Records, ORNL RC
93. ORNL Patent Office
94. Nuclear Safety Information Center

EXTERNAL DISTRIBUTION

95. Director, Reactor Division, ERDA-ORO
96-97. Director, Division of Nuclear Fuel Cycle and Production, ERDA, Washington, D. C. 20014
98-99. Director, Division of Reactor Research and Development, ERDA, Washington, D. C. 20014
100. R. B. Chitwood, Chief, Industrial Programs Branch, Division of Waste Management, Production, and Reprocessing, ERDA, Washington, D. C. 20014
101. W. H. McVey, Chief, Technology Branch, Division of Waste Management, Production, and Reprocessing, ERDA, Washington, D. C. 20014
102. W. S. Scheib, Jr., Chief, Projects Branch, Division of Waste Management, Production, and Reprocessing, ERDA, Washington, D. C. 20014
103. D. R. Spurgeon, Acting Assistant Director for Reprocessing, Division of Waste Management, Production, and Reprocessing, ERDA, Washington, D. C. 20014
104. Research and Technical Support Division, ERDA-ORO
105-356. Given distribution as shown in TID-4500 under UC-79c — Fuel Recycle category (Applied)

☆ U.S. GOVERNMENT PRINTING OFFICE: 1977-748-189/116