OAK RIDGE NATIONAL LABORATORY LIBRARIES

3 4456 0578648 7

ORNL/ENG/TM-11

Cy. 48

Safety Analysis Report for Packaging: The ORNL Loop Transport Cask

J. H. Evans
K. K. Chipley
H. A. Nelms
W. K. Crowley
R. A. Just

OAK RIDGE NATIONAL LABORATORY
CENTRAL RESEARCH LIBRARY
CIRCULATION SECTION
4500N ROOM 175
LIBRARY LOAN COPY
DO NOT TRANSFER TO ANOTHER PERSON
If you wish someone else to see this report, send in name with report and the library will arrange a loan.

OAK RIDGE NATIONAL LABORATORY
OPERATED BY UNION CARBIDE CORPORATION - FOR THE DEPARTMENT OF ENERGY

ORNL/ENG/TM-11
Dist. Category UC-71

Contract No. W-7405-eng-26

ORNL Engineering

SAFETY ANALYSIS REPORT FOR PACKAGING: THE ORNL LOOP TRANSPORT CASK

J. H. Evans
K. K. Chipley
H. A. Nelms
W. K. Crowley
R. A. Just

Date Published: November 1977

OAK RIDGE NATIONAL LABORATORY
Oak Ridge, Tennessee 37830
operated by
UNION CARBIDE CORPORATION
for the
DEPARTMENT OF ENERGY

CONTENTS

	Page
LIST OF FIGURES	v
LIST OF TABLES	xi
ABSTRACT	1
0. GENERAL INFORMATION	1
0.1 Introduction	1
0.2 Package Description	2
0.2.1 Packaging	2
0.2.2 Operational Features	6
0.2.3 Contents	6
1. STRUCTURAL EVALUATION	7
1.1 Weights and Center of Gravity	8
1.2 Mechanical Properties of Materials	8
1.3 General Standards for All Packaging	16
1.3.1 Package Lifting Devices	17
1.3.2 Lid-Lifting Devices	27
1.3.3 Tie-Down Devices	30
1.4 Structural Standards for Packaging	42
1.4.1 Load Resistance	42
1.4.2 External Pressure	44
1.5 Standards for Normal Conditions of Transport	46
1.5.1 Heat	46
1.5.2 Cold	48
1.5.3 Pressure	51
1.5.4 Vibration	52
1.5.5 Water Spray	52
1.5.6 Free Drop	52
1.5.7 Penetration	70
1.5.8 Compression	75
1.6 Standards for Hypothetical Accident Conditions	75
1.6.1 Free Drop	76
1.6.2 Puncture	97
1.6.3 Thermal Condition	97
1.6.4 Water Immersion	104
1.7 Special Form	104
1.8 Inner Container Design	106
2. THERMAL EVALUATION	112
2.1 Thermal Evaluation for Normal Conditions of Transport	113
2.1.1 Thermal Model	113
2.1.2 Maximum Temperatures	116
2.1.3 Minimum Temperatures	118
2.1.4 Maximum Internal Pressures	118

Page

2.2 Thermal Hypothetical Accident Evaluation 119
2.2.1 Thermal Model 120
2.2.2 Maximum Temperatures 120
2.2.3 Maximum Pressures 122
2.2.4 Damage Assessment 122

3. CONTAINMENT 124
3.1 Containment Boundaries 124
3.1.1 Secondary Containment 124
3.1.2 Primary Containment 124
3.2 Requirements for Normal Conditions at Transport 125
3.3 Requirements for Accident Conditions 126
3.3.1 Special Form Materials 126
3.3.2 Inner Containers 126
3.3.3 Inner Container Drop Test 127

4. SHIELDING 131
4.1 Normal Conditions 131
4.2 Accident Conditions 131

5. CRITICALITY 136

6. QUALITY ASSURANCE 137
6.1 Fabrication, Inspection, and Acceptance Tests 137
6.2 Operating Procedures and Routine Inspection 138
6.3 Periodic Maintenance and Inspection 138

REFERENCES 139

APPENDIX A — As-Built Drawings 141

APPENDIX B — Approval Documents 151

APPENDIX C — Derivation of Equations and Computer Listings 157

APPENDIX D — Specification 2R Container Test Report 193

APPENDIX E — Operating Procedures and Checklists 201

APPENDIX F — Nuclear Safety Review Forms 213

LIST OF FIGURES

Figure		Page
0.1	Illustration of ORNL loop transport carrier and skid	3
0.2	ORNL loop transport cask	4
0.3	Cask sliding door	5
1.1	Dynamic compressive stress-strain diagram for lead (from ref. 8)	10
1.2	Thermal expansion of lead and stainless steel (from ref. 9)	11
1.3	Dynamic tensile properties of stainless steel (from ref. 10)	12
1.4	Dynamic tensile properties of mild steel (from ref. 10)	13
1.5	Dynamic compressive properties of stainless steel (from ref. 11)	14
1.6	Dynamic compressive properties for mild steel (from ref. 11)	15
1.7	Cask-lifting device for horizontal shift	19
1.8	Vertical-lifting trunnion	23
1.9	Cask-lifting device for vertical lift and turning	24
1.10	Handle on end access plug	28
1.11	Schematic diagram of tie-down arrangement for the ORNL loop transport cask	32
1.12	Cask tie-down	33
1.13	Cask-lifting and tie-down eye	38
1.14	Cask as a simple beam	43
1.15	Computational model of cask end plate	45
1.16	FEATS thermal expansion model	49
1.17	Acceleration vs deformation computed for 3-ft free drop and end impact of ORNL loop transport cask	54

Figure | Page

1.18 Acceleration vs deformation computed for 3-ft free drop and side impact of ORNL loop transport cask with a dynamic yield stress of 6000 psi 55

1.19 Acceleration vs deformation computed for 3-ft free drop and side impact of ORNL loop transport cask with a dynamic yield stress of 14,000 psi 56

1.20 Acceleration vs deformation computed for 3-ft free drop and corner impact of ORNL loop transport cask at an angle of 15° with a dynamic yield stress of 6000 psi 57

1.21 Acceleration vs deformation computed for 3-ft free drop and corner impact of ORNL loop transport cask at an angle of 15° with a dynamic yield stress of 14,000 psi 58

1.22 Acceleration vs deformation computed for 3-ft free drop and corner impact of ORNL loop transport cask at an angle of 45° with a dynamic yield stress of 6000 psi 59

1.23 Acceleration vs deformation computed for 3-ft free drop and corner impact of ORNL loop transport cask at an angle of 45° with a dynamic yield stress of 14,000 psi 60

1.24 ORNL loop transport cask corner impact orientation 62

1.25 Fin peak force/in. as a function of fin height-to-thickness ratio (from ref. 23) 65

1.26 Lead deformation by impact on lifting eyes 66

1.27 Energy absorbed vs acceleration computed for lifting eyes, cask body, and complete cask resulting from 3-ft free drop and top impact of ORNL loop transport cask 71

1.28 Deformation vs energy absorbed computed for cask lifting eyes as a result of 3-ft free drop and top impact of ORNL loop transport cask 72

1.29 Deformation of cask body vs energy absorbed computed for 3-ft free drop and top impact of ORNL loop transport cask with a dynamic yield stress of 6000 psi 73

Figure		Page

1.30 Deformation of cask body vs energy absorbed computed for 3-ft free drop and top impact of ORNL loop transport cask with a dynamic yield stress of 14,000 psi 74

1.31 Acceleration vs deformation computed for 30-ft free drop and end impact of ORNL loop transport cask 77

1.32 Acceleration vs deformation computed for 30-ft free drop and side impact of ORNL loop transport cask with a dynamic yield stress of 6000 psi 78

1.33 Acceleration vs deformation computed for 30-ft free drop and side impact of ORNL loop transport cask with a dynamic yield stress of 14,000 psi 79

1.34 Shielding loss resulting from 30-ft free drop and end impact of ORNL loop transport cask 80

1.35 Shielding loss resulting from 30-ft free drop and side impact of ORNL loop transport cask with a dynamic yield stress of 6000 psi 81

1.36 Acceleration vs deformation computed for 30-ft free drop and corner impact of ORNL loop transport cask at an angle of 15° with a dynamic yield stress of 6000 psi 83

1.37 Acceleration vs deformation computed for 30-ft free drop and corner impact of ORNL loop transport cask at an angle of 15° with a dynamic yield stress of 14,000 psi 84

1.38 Acceleration vs deformation computed for 30-ft free drop and corner impact of ORNL loop transport cask at an angle of 45° with a dynamic yield stress of 6000 psi 85

1.39 Acceleration vs deformation computed for 30-ft free drop and corner impact of ORNL loop transport cask at an angle of 45° with a dynamic yield stress of 14,000 psi 86

1.40 Shielding loss resulting from 30-ft free drop and corner impact of ORNL loop transport cask with a dynamic yield stress of 6000 psi 87

1.41 Axial and radial components of vertical acceleration resulting from 30-ft free drop and corner impact of ORNL loop transport cask 89

Figure		Page
1.42	Energy vs acceleration for cask lifting eyes and body and complete response resulting from 30-ft free drop and top impact of ORNL loop transport cask	92
1.43	Energy vs deformation for lifting eyes resulting from 30-ft free-drop top impact of ORNL loop transport cask	92
1.44	Deformation vs energy computed for cask body with dynamic yield stress of 6000 psi as a result of 30-ft free drop and top impact of ORNL loop transport cask	94
1.45	Deformation vs energy computed for cask body with dynamic yield stress of 14,000 psi as a result of 30-ft free drop and top impact of ORNL loop transport cask	95
1.46	ORNL loop transport cask (a) lifting eye model and (b) shielding loss resulting from 30-ft free drop and top impact of cask on lifting eye for lead dynamic yield stress of 6000 psi	96
1.47	Outer shell physical property and cask weight relationship (from ref. 25)	98
1.48	Model of ORNL loop transport cask used for evaluation of thermal expansion effects	100
1.49	Typical special form encapsulation	105
1.50	Pipe element 2R container	107
1.51	Details of typical flanged 2R container	108
1.52	Typical threaded 2R container	109
1.53	Typical bolted 2R container	110
2.1	Model of ORNL loop transport cask used in computer computations of temperature distribution for thermal analyses (x, ˙xx, ˙xxx, and ˙xxxx are node numbers)	115
2.2	Temperature-time history of ORNL loop transport cask resulting from exposure to thermal accident condition (location of node numbers illustrated in Fig. 2.1)	121
2.3	Lead melt resulting from exposure of ORNL loop transport cask to thermal condition of hypothetical accident	123

Figure		Page
3.1	Specification 2R containers used in drop tests	128
3.2	Specification 2R container inside steel casing for drop test	129
4.1	Shielding model used in dose rate calculations for ORNL loop transport cask	133
A.1	Loop transport skid and miscellaneous details	143
A.2	Loop transport carrier, assembly	144
A.3	Carrier body weldment	145
A.4	Loop transport carrier, details	146
A.5	Loop transport carrier, modifications	147
A.6	Loop transport carrier, details	148
A.7	Loop transport carrier, fire shield assembly	149
A.8	Loop transport carrier, fire shield details	150
C.1	Computation diagram for top-corner impact of cask	160
C.2	Principles of impulse and momentum for a corner impact	164
C.3	Computational model for side impact of cylindrical cask	171
C.4	Computational model for impact of cask equipped with energy absorber which deforms in pure compression	179
C.5	Force-deformation curve for energy absorber shown in Fig. C.4	180
C.6	Typical energy absorber configurations	182
D.1	Inner containers and sleeves before testing	196
D.2	Model after first test	197
D.3	Model after second test	198
D.4	Model after second test	199

LIST OF TABLES

Table		Page
1.1	Static mechanical properties of cask materials	9
1.2	FEATS thermal expansion stresses resulting from normal transport conditions of 130°F ambient, solar heat load, and 1000 W internal heat load	50
1.3	Maximum deformation and maximum acceleration computed for the ORNL loop transport cask as a result of the 3-ft free drop and impact in four orientations	61
1.4	Maximum accelerations, maximum deformations, and energy absorbed in 3-ft drop on lifting eyes	75
1.5	Maximum deformation and maximum acceleration computed for the ORNL loop transport cask as a result of the 30-ft free drop and end and side impacts	82
1.6	Maximum deformation and maximum acceleration computed for the ORNL loop transport cask as a result of the 30-ft free drop and corner impact	88
1.7	Response of ORNL loop transport cask to 30-ft free drop and impact on top lifting eyes	91
1.8	Parameters used to evaluate effects of thermal expansion from hypothetical accident on the ORNL loop transport cask	100
1.9	Dimension schedule for Specification 2R containers	111
2.1	Properties of cask materials used in thermal analyses	114
2.2	Temperatures computed for ORNL loop transport cask under normal conditions of transport	117

SAFETY ANALYSIS REPORT FOR PACKAGING: THE ORNL LOOP TRANSPORT CASK

J. H. Evans K. K. Chipley H. A. Nelms
W. K. Crowley R. A. Just

ABSTRACT

This document contains an evaluation of the ORNL loop transport cask, demonstrating its compliance with the regulations[1-3] governing the transportation of radioactive and fissile materials. A previous review of the cask is updated to demonstrate compliance with current regulations, to present current procedures, and to reflect the more recent technology.

0. GENERAL INFORMATION

0.1 Introduction

The ORNL loop transport cask was designed by members of the Design Department in the Engineering and Mechanical Division at Oak Ridge National Laboratory, and it was fabricated in the ORNL shops in 1956. The original cask was modified and upgraded in 1968 to bring it into compliance with the regulations.[1-3] The cask is scheduled to be modified upon approval of this document by the Oak Ridge Operations Office (ORO) of the Department of Energy (DOE). The modifications are the addition of a name plate, a fire shield, and the strengthening of the top lifting eyes to meet tie-down requirements. All engineering and analysis and logic, put forth by this SARP, reflects all modification to be made to the cask. Copies of the "as-built" drawings of the cask are presented in Appendix A. The modified cask design and this safety analysis report for packaging (SARP) have been reviewed and approved by the ORNL Transportation Committee and the Oak Ridge Operations Office of DOE. Copies of the approval documents are contained in Appendix B.

0.2 Package Description

The structural features, operational features, and intended contents of the ORNL loop transport cask are described in the following paragraphs.

0.2.1 Packaging

The ORNL loop transport cask is shown in Figs. 0.1 and 0.2, and the design drawings are given in Appendix A. The cask is basically a right circular cylinder with an outside diameter of 24 in., an overall length of 90 in., and a weight of 16,000 lb. The inner cavity of the cask is lined with 1/8-in.-thick stainless steel, has a diameter of 5-3/4 in., and is 68 in. long. Biological shielding is provided by lead with a minimum thickness of 8-5/16 in. The external cylindrical shell of the cask consists of a length of 24-in. sched-40 carbon steel pipe 0.69 in. thick. The ends of the cask are flat plates of carbon steel.

Access to the inner cavity is attained by means of a stainless-steel-covered lead plug at each end of the cask. However, the shielding at one end of the cask is in the form of a sliding door, and it is this end of the cask that is normally used for cask loading and unloading. The plugs at both ends of the cask and the cover for the sliding-door housing are provided with neoprene gaskets and bolted in place, and access is achieved by removal of eight 1/2-in.-diam cap screws holding a plug in place. The only other cask penetration is a pressure-test tap located in the sliding-door housing. The closure for the pressure-test penetration is a 1/4-in. pipe plug that is protected from damage by a threaded pipe and pipe cap.

The ORNL loop transport cask is compact and, with respect to practical dynamic considerations, is a rigid body. External structural portions of the cask include the sliding-door housing, transport skid, lifting eyes, and the fire shield. The sliding door normally used for cask loading and unloading is a shield block which slides in a housing external to the outer shell of the cask, as illustrated in Fig. 0.3. The sliding-door housing is perpendicular to the axis of the cask and extends 7 in. beyond the outer surface of the cask. This protuberance

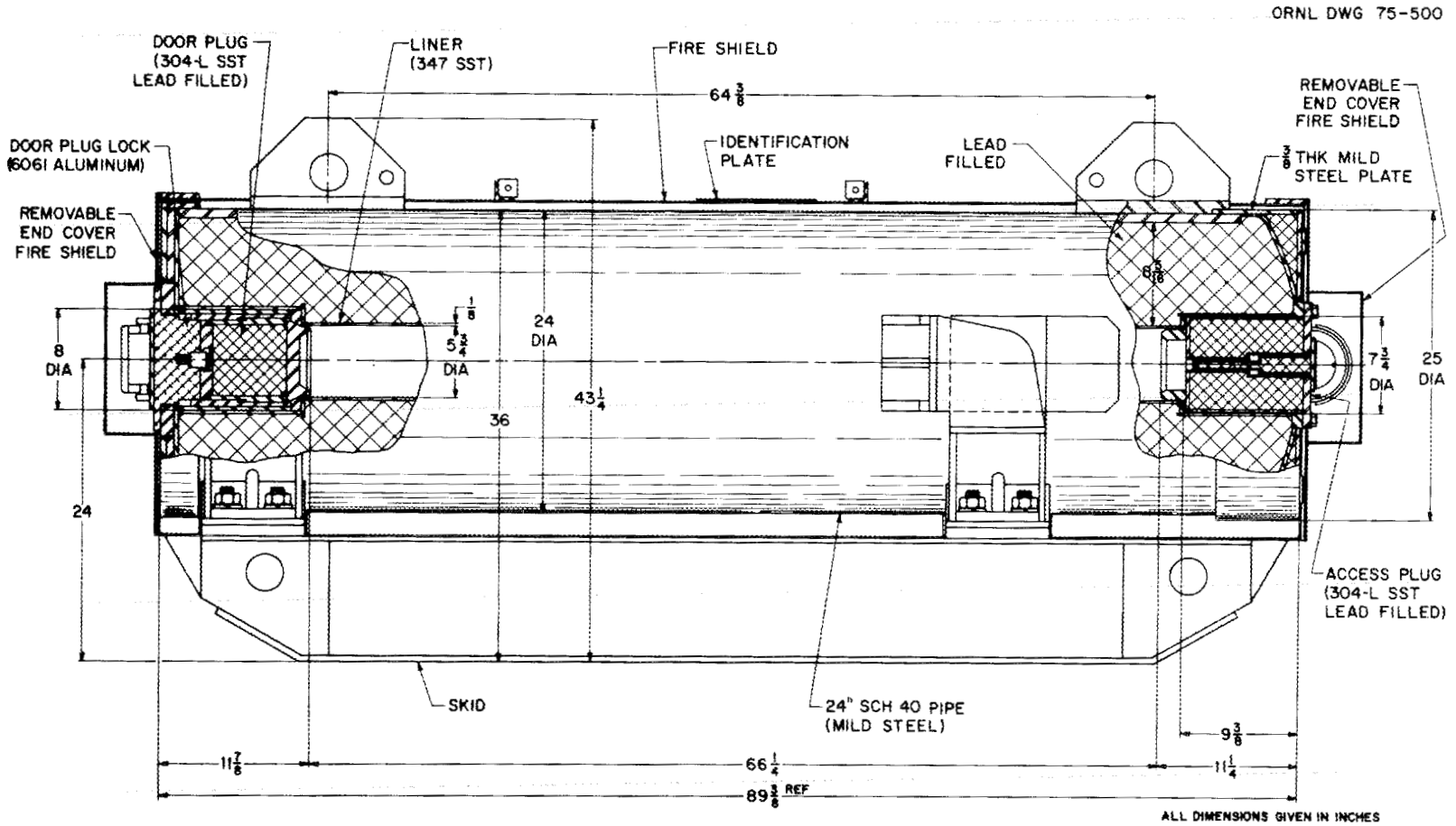

Fig. 0.1. Illustration of ORNL loop transport carrier and skid.

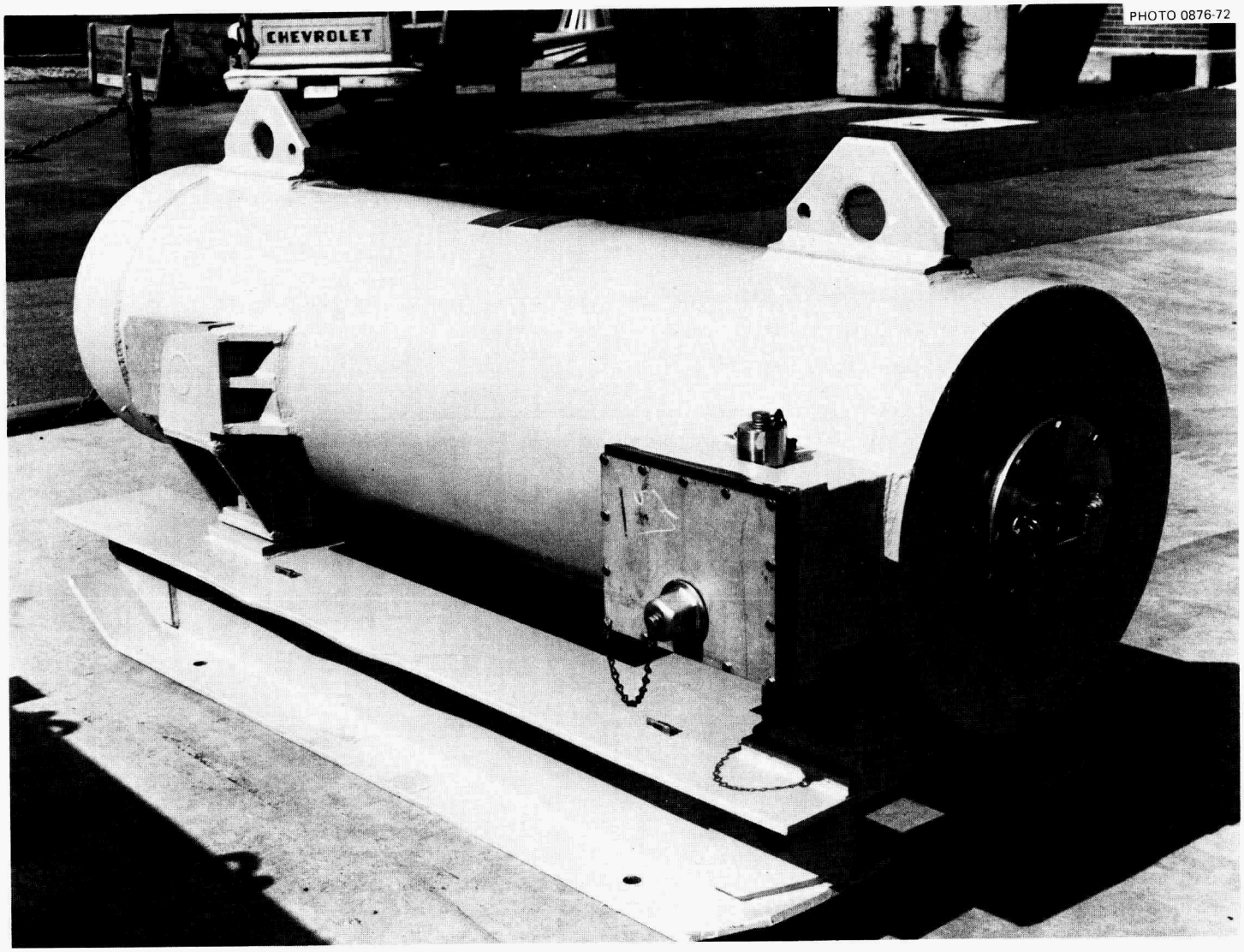

Fig. 0.2. ORNL loop transport cask.

ORNL DWG 75-1669

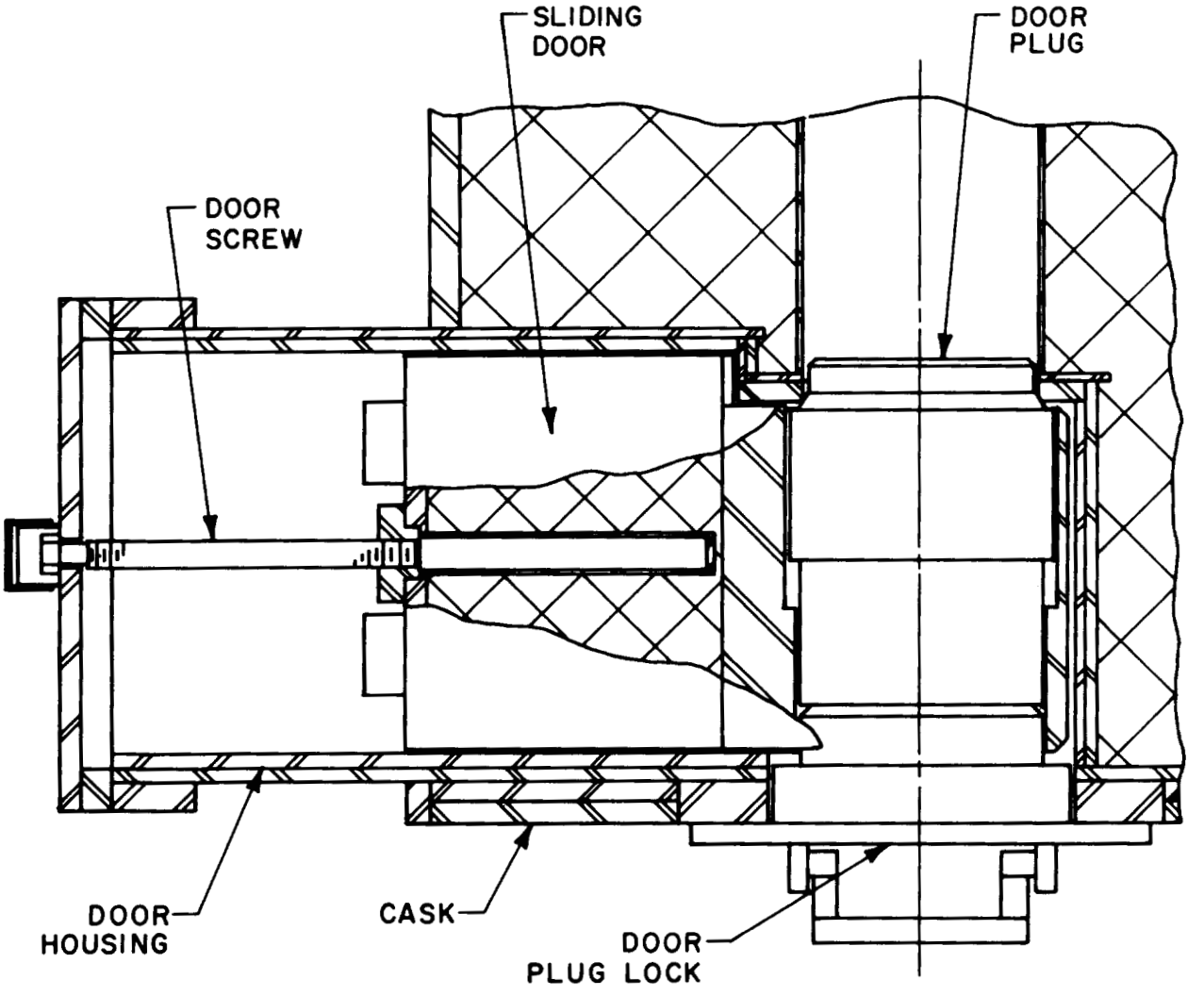

Fig. 0.3. Cask sliding door.

is designed in such a manner that damage is highly unlikely during normal operations.

The transport skid is a structural steel frame bolted to the cask. The skid can also be bolted directly to the bed of a truck or rail car. This skid can be removed from the cask to facilitate on-site handling and maintenance. Lifting eyes are located on the top of the cask. Tension members can be attached to the top lifting eyes to tie the cask down. The cask is essentially enclosed in a fire shield constructed primarily from hot-rolled steel sheet and coated with intumescent paint. The function of this shield is to protect the cask if it should be exposed to a fire or other source of external heat. Removable end covers in the shield facilitate loading and unloading of the cask.

0.2.2 Operational features

No special tools are required for operation of the ORNL loop transport cask, and no special valving or instrumentation is needed. The cask has three "moving" parts: the two end plugs and the sliding door used for loading and unloading. The cask is remotely loaded and unloaded while underwater, in a hot cell, connected to a hot-cell transfer port, or by other means. Underwater loading and unloading is via the cask access plug with the long axis of the cask in a vertical orientation. All water in the cask is drained and purged prior to shipping. Dry loading and unloading is usually accomplished via the sliding door with the long axis of the cask in a horizontal orientation. Tools used to assist in loading and unloading can be inserted through the cask access plug. The cask is lifted in a horizontal attitude by using the two lifting eyes on its top. The trunnions on the access-plug end of the cask are used to lift the cask in a vertical attitude. The skid is used for all modes of transport but may be removed for loading and on-site handling.

0.2.3 Contents

The ORNL loop transport cask is approved for Type B and large quantities of radioactive materials and Fissile Class I shipments. The

contents of the cask are limited to solid materials. These include spent reactor fuel, irradiated experiments, and other solid radioactive and fissile materials. Typical spent fuel contents include coated particles of U, Pu, and Th; clad oxide rods of U, Pu, and Th; and solidified molten-salt fuels. Other radioactive materials which have been shipped in the cask include BeO; silicates of Nb, Ti, Ta, and Zr; nitrides of Zr, Nb, Ta, and Ti; carbides of Zr, Nb, Ti, and W; and metallic specimens. Such materials are either encased in unbreached metal cladding or in a 2R container.[4] The contents of the cask may also be special form materials. The weight of the intended contents and the inner containment vessel or vessels will not exceed 150 lb.

Radioactive materials transported in the ORNL loop transport cask are limited to quantities that will result in radiation levels equal to or less than allowed by the regulations.[3] Fissile material is limited to 1250 g per shipment. In addition, if the total quantity of fissile material exceeds 800 g, the distribution of this material is limited to 250 g/linear foot. All fissile shipments are Class I. The internal heat load of the cask is such that no external cooler is required. Thus, there are no penetrations for coolant and there is no pressure relief system. The decay heat is limited to 500 W when shipment is by common carrier and to 1000 W when shipment is by exclusive-use vehicle. These limits were set to conform to the requirements of the regulations relative to accessible surface temperature. Heat generated by the contents of the packaging is conducted through the walls of the cask and then convected and radiated to the atmosphere.

1. STRUCTURAL EVALUATION

Calculations, test results, and engineering logic are presented in succeeding subsections to demonstrate that the ORNL loop transport cask complies with the applicable structural requirements of the regulations.[1-3] The effects of both normal and specified hypothetical accident conditions on the structural integrity of the package were considered, and other factors deemed pertinent to the safety and operability of the package were also considered.

1.1 Weights and Center of Gravity

The ORNL loop transport cask weighs 16,000 lb exclusive of any intended contents. The maximum weight of the intended cask contents and inner containment will not exceed 150 lb. The sliding door normally used in cask loading and unloading weighs 485 lb, and the door plug weighs 92 lb. The access plug in the opposite end of the cask weighs 177 lb. Although there are minor differences in the masses of the access plug and the door plug, the design of the door is such that no significant imbalance exists. The cask is essentially symmetrical with respect to its principal axis. The lifting eyes on top of the cask are located so that the cask can be leveled precisely, if necessary, with minor adjustments of sling lengths.

1.2 Mechanical Properties of Materials

The ORNL loop transport cask is constructed of low-carbon mild steel, type 304 stainless steel, and cast-in-place lead. The steel is specified on the drawings as "steel," "mild steel," "HR steel," etc. The static mechanical properties of the materials in the cask, given in Table 1.1, were used to effect conservative analysis solutions. The properties of stainless steel were published by the International Nickel Company,[5] and the properties of the low-carbon steel and lead were taken from *Machine Design*[6] and the *Manual of Steel Construction.*[7]

The programs used to estimate the response of the cask impacting on the corner and side are based on the assumption that the cask is constructed of ideally plastic materials. An ideally plastic material is one which has a constant value of stress for all strains. It is recognized that normally used cask materials do not behave in this manner. However, conservative solutions can be affected if care is used in selecting the material property constant, dynamic yield stress or specific energy, and in interpreting the results. To accomplish this objective, numerical values for ideal dynamic yield stress of specific energy which bound the real stress-strain curve must be selected. The lower value will result in a calculated deformation greater than actual.

Table 1.1. Static mechanical properties of cask materials

Property	Symbol	304L stainless steel	Low-carbon steel	Lead
Yield stress, psi	σ_y	30,000	30,000	2000
Ultimate tensile strength, psi	σ_u	75,000	60,000	2500
Modulus of elasticity, psi	E	29×10^6	29×10^6	2×10^6
Elongation, %		40	40	45
Density, lb/in.^{3}	ρ	0.283	0.283	0.41
Maximum allowable shear = $\sigma_y/2$, psi	τ_{max}	15,000	15,000	1000
Coefficient of expansion, in./in. per °F	α	9.2×10^{-6}	6.5×10^{-6}	16.3×10^{-6}
Ultimate shear stress, psi	T_v	61,000	45,000	
Allowable bearing stress	σ_C		48,600	

The higher value will result in calculated accelerations of greater magnitude than actual.

The dynamic properties of lead reported by Evans[8] were used in the impact analyses. The reported[8] dynamic compressive stress-strain properties of lead are illustrated in Fig. 1.1, which supports selection of the upper and lower values of 14,000 and 6000 psi, respectively, for the ideal dynamic yield stress used in the impact calculations. The volumetric expansion properties of lead reported by Shappert[9] were used to evaluate the effects of thermal gradients. Figure 1.2 is reproduced from Shappert's report.

The dynamic tensile properties of stainless steel and mild steel reported by Clark[10] are reproduced in Figs. 1.3 and 1.4. The dynamic compressive properties reported by Evans,[11] reproduced in Figs. 1.5 and 1.6, were used in the impact analyses. These curves support the selection of 100,000 and 240,000 psi as limits for ideal dynamic yield stress or specific energy for mild steel for those techniques employing

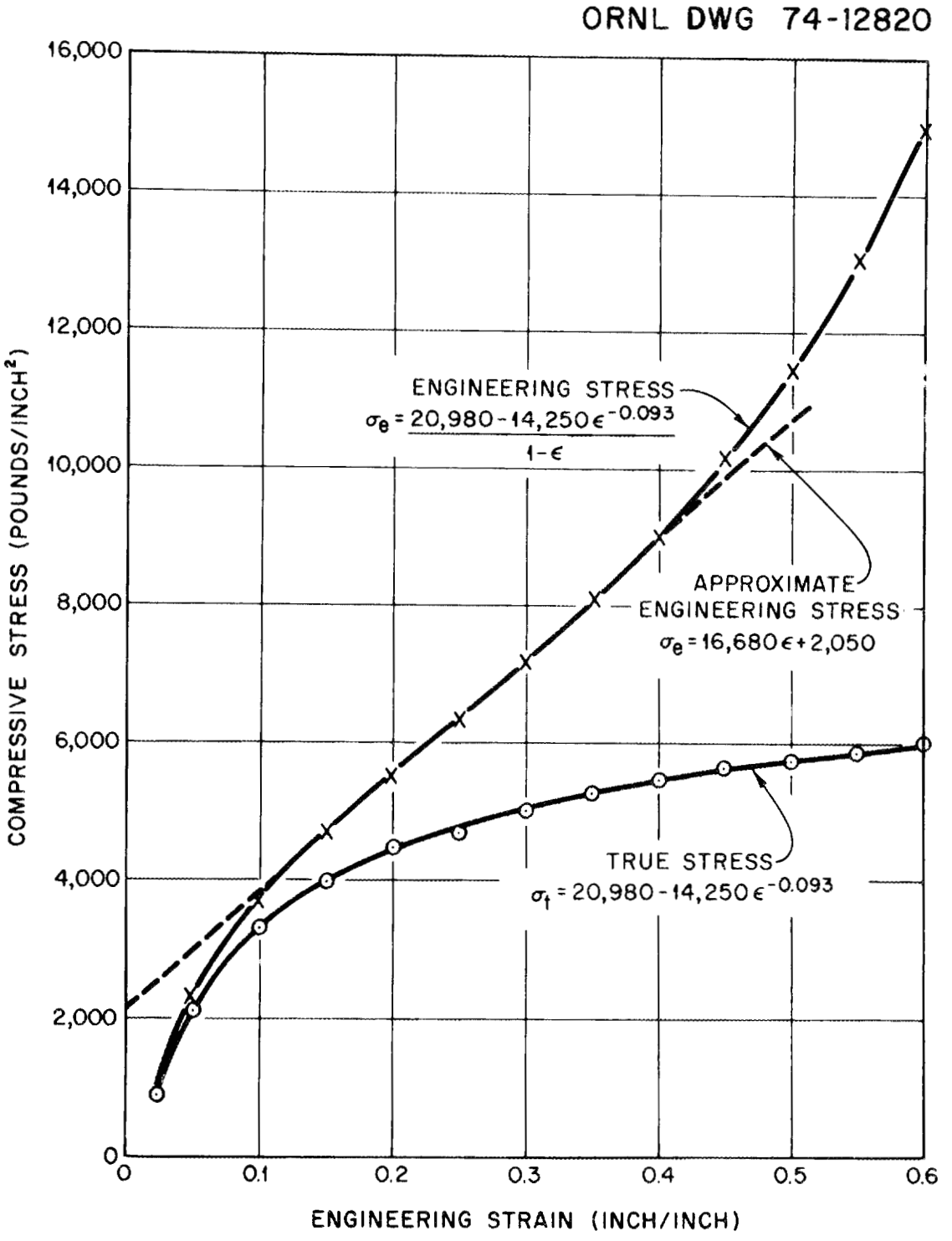

Fig. 1.1. Dynamic compressive stress-strain diagram for lead (from ref. 8).

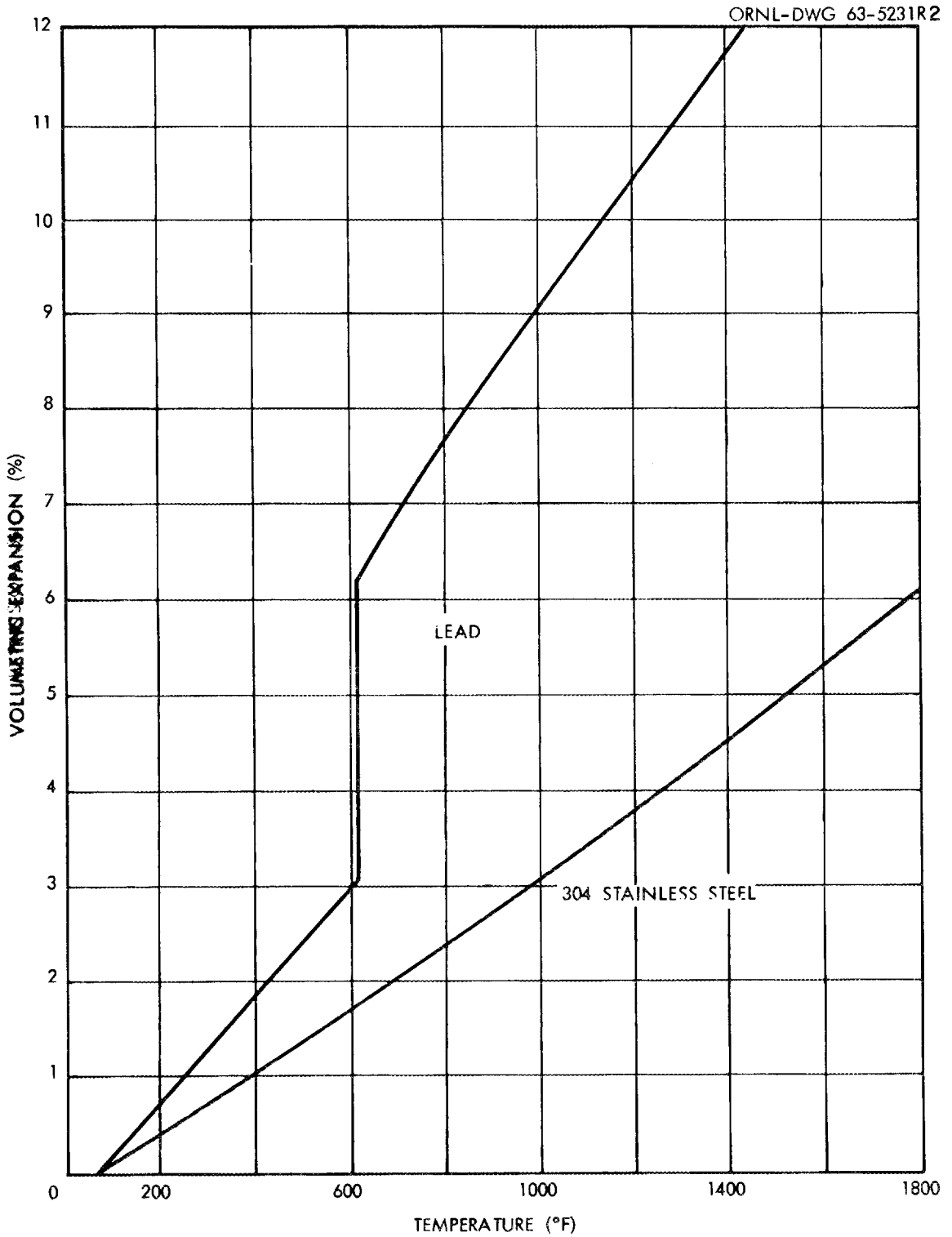

Fig. 1.2. Thermal expansion of lead and stainless steel (from ref. 9).

ORNL DWG NO. 71-13027

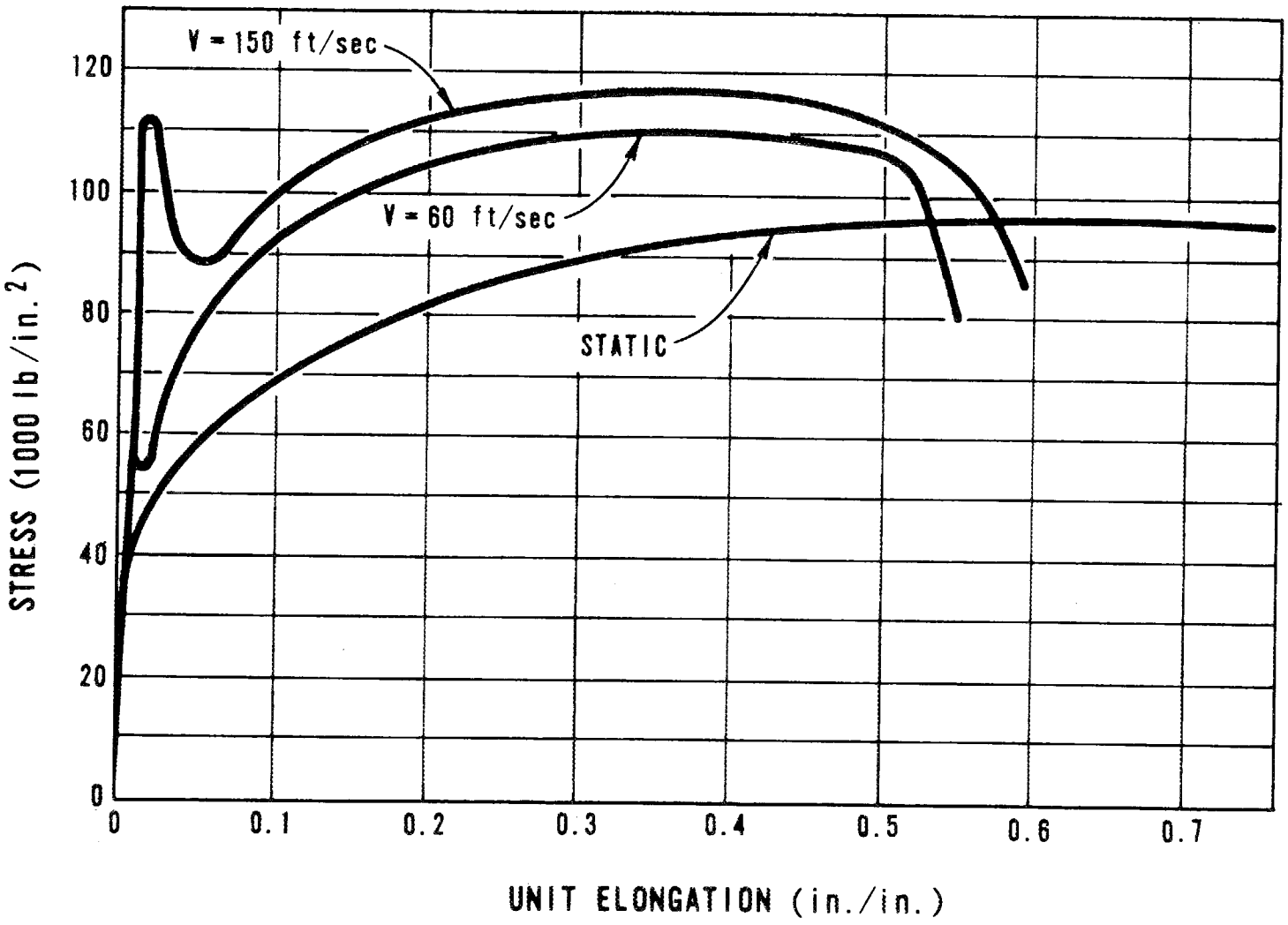

Fig. 1.3. Dynamic tensile properties of stainless steel (from ref. 10).

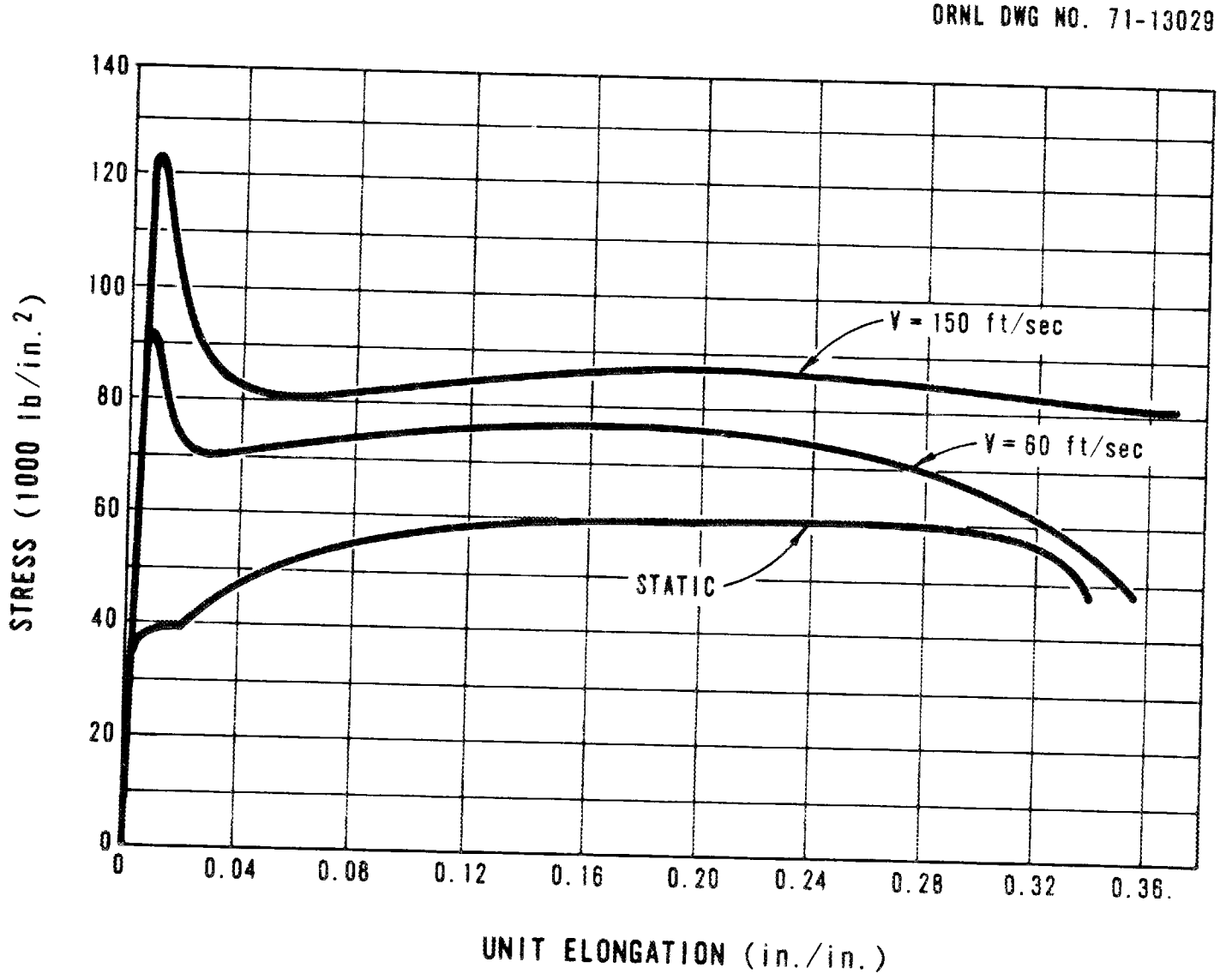

Fig. 1.4. Dynamic tensile properties of mild steel (from ref. 10).

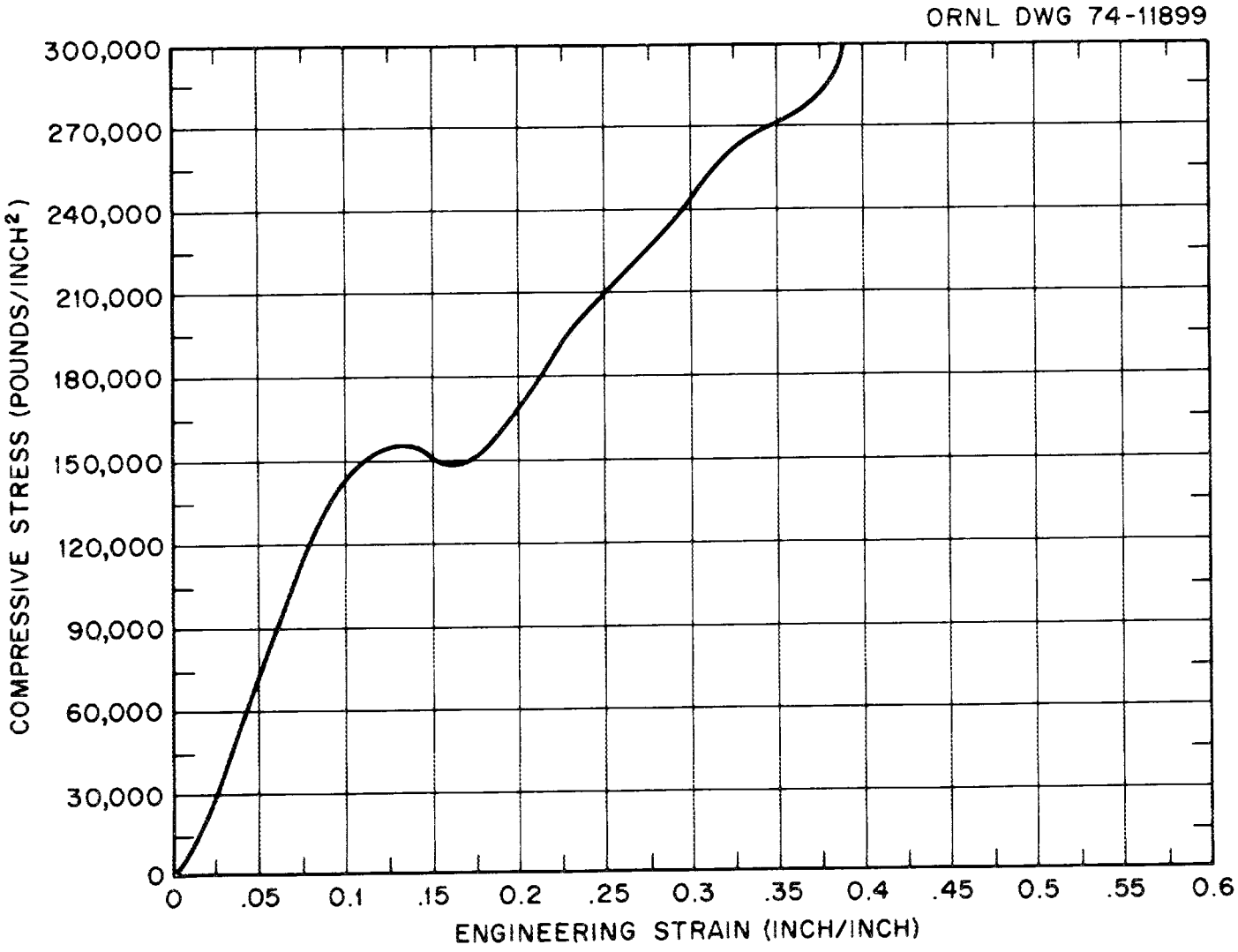

Fig. 1.5. Dynamic compressive properties of stainless steel (from ref. 11).

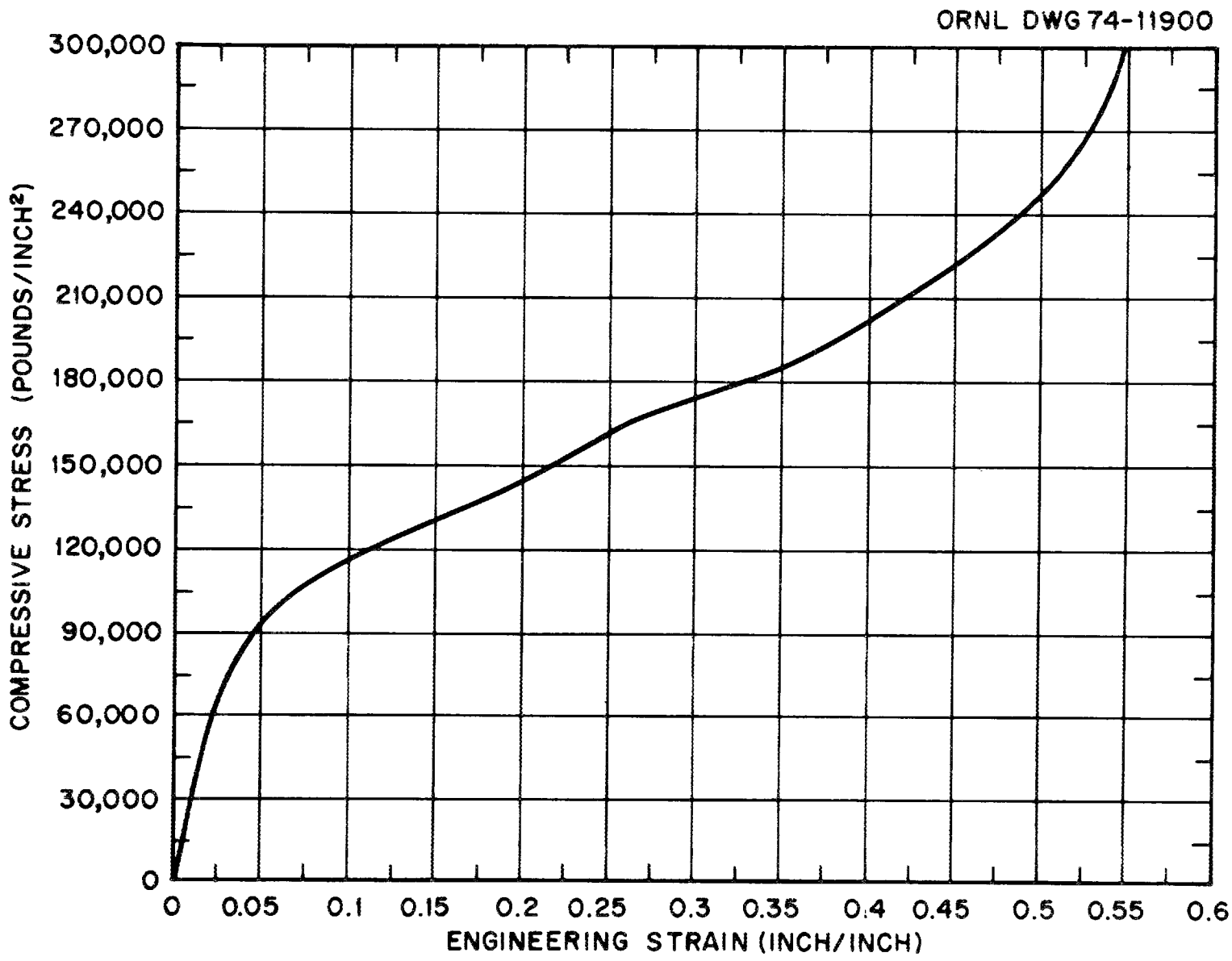

Fig. 1.6. Dynamic compressive properties for mild steel (from ref. 11).

this concept, as discussed previously for lead. In all impact analyses, it is assumed that the materials are incompressible.

The dynamic properties of threaded stainless steel fasteners reported by Cannon[12] were used in the impact analysis of the closures. Commercial stainless steel bolts and cap screws in the size range of 3/8 to 1 in. were impact tested by Cannon, and the dynamic stress of these fasteners ranged from 75,000 to 104,000 psi, while the ultimate stress ranged from 95,000 to 150,000 psi. The wide variation in properties is, to a great extent, due to the difference in manufacturing methods. The lower values were used as failure criteria in these analyses.

1.3 General Standards for All Packaging

The general standards for all packaging cover the chemical and galvanic reactions of the materials of the package, closure of the package, and the lifting and tie-down devices for the package. No chemical or galvanic reactions between the materials from which the ORNL loop transport cask was fabricated and the materials of the cask contents have been experienced to date. The materials shipped are dry solids, and all internal surfaces which might come into contact with these materials are of stainless steel. The external surfaces of the cask are primarily carbon steel, and the integrity of the external surfaces is maintained by the application of a rust-inhibiting primer coat and two finish coats of intumescent epoxy at regularly scheduled intervals.

The standards specify that the package be equipped with a positive closure that will prevent inadvertent opening. The cask access plug, door plug, and cover in the sliding-door housing are secured with bolts and qualify as positive closures.

The requirements for the package lifting, lid lifting, and tie-down devices and the means for complying with them are discussed in detail in the following subsections.

1.3.1 Package lifting devices

If there is a system of lifting devices that is a structural part of the package, the regulations require that this system be capable of supporting three times the weight of the loaded package without generating stress in any material of the package in excess of its yield strength.

There are two sets of devices that can be used to lift the ORNL loop transport cask. Two lifting eyes are attached by weld joints to the top of the cask, and a cylindrical lug is located on each side of the cask perpendicular to its principal axis. The two lifting eyes on the top of the cask are normally used to lift the cask with its principal axis in a horizontal attitude, and the cylindrical lugs are normally used to lift the cask with its principal axis in a vertical attitude.

1.3.1.1 Horizontal lifting eyes. The two lifting eyes on the top of the cask were fabricated from carbon steel plate and attached to the outer shell of the cask by means of a series of welds. Three possible failure mechanisms for these lifting eyes were considered: (1) failure of the plate in which the eye is located, (2) failure of the weld joint which joins the eye plate to its base plate, and (3) failure of the weld joint which joins the base plate to the outer shell of the cask.

(a) Failure of eye plate. To obtain conservative results, the eye plate was assumed to have the shape indicated by the dashed lines in Fig. 1.7. For this geometry, the maximum tensile stress in the plate is determined by using the following equation:[13]

$$\sigma_t = (\alpha) \frac{8F}{\pi^2 r_o t} , \qquad (1.1)$$

where

σ_t = tensile stress (psi),

α = a constant = $f(r_o/r_i, \theta)$,

F = applied force assumed to act as shown in Fig. 1.7 and equal to one-half the weight of the loaded cask multiplied by a load factor of 3 = (16,150/2)(3) = 24,225 lb,

r_o = outside radius of eye plate = 4.25 in.,

r_i = inside radius of eye plate = 1.5 in., and

t = thickness of eye plate = 2 in.

In the model illustrated in Fig. 1.7, the maximum stress will occur on the inside radius of the eye plate when the sling angle $\theta = 90°$. However, since the design of the actual plate at that point is overly conservative relative to the assumed model (indicated by the dashed lines), the model was evaluated for the stress occurring on the inside radius when the sling angle $\theta = 0°$. At this position, the constant[13] $\alpha = 1.7$, and the maximum tensile stress

$$\sigma_t = 1.7 \frac{8(24,225)}{\pi^2(4.25)(2)} = 3927 \text{ psi} .$$

This value is less than the yield stress of the material from which the eye plate was fabricated, and it was concluded that the plate will not fail as a result of horizontal lifting of the loaded cask.

(b) Eye plate weld joint. The notations of detail A in Fig. 1.7 were used to evaluate the possibility of failure of the weld that joins the eye plate to its base plate. The tensile stress at M-M is given by the equation

$$\sigma_t = \frac{F}{\text{area}} = \frac{F}{2Lb} , \tag{1.2}$$

where

L = length of weld = 12 in.,

b = width of weld at its base = 1 in.

Therefore,

$$\sigma_t = \frac{24,225}{2(12)(1)} = 1009 \text{ psi} .$$

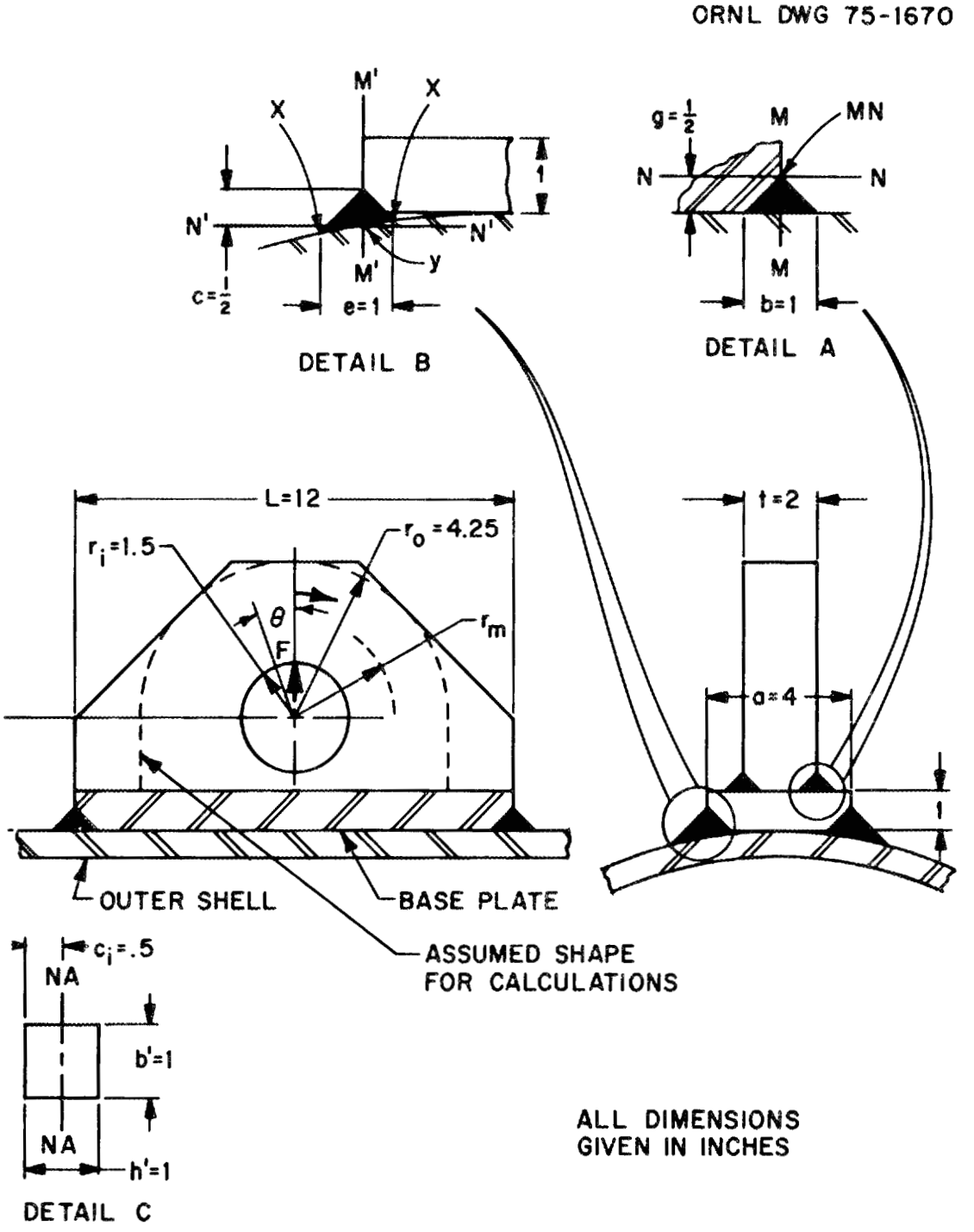

Fig. 1.7. Cask-lifting device for horizontal shift.

The shear stress is given by

$$\tau = F/2g \ ,$$

where

g = height of weld,

$$\tau = \frac{24,225}{(2)(1/2)(12)} = 2018 \text{ psi} \ .$$

These values are less than the allowable, and it was concluded that the weld joining the eye plate to its base plate will not fail as a result of horizontal lifting of the loaded cask.

(c) Base plate weld joint. The notations in details B and C illustrated in Fig. 1.7 were used to evaluate the possibility of failure of the weld that joins the lifting eye base plate to the cask. The tensile stress at N'-N' in detail B is given by the equation

$$\sigma_t = \frac{F}{\text{area}} = \frac{F}{2(e)(L + a)} \ , \tag{1.3}$$

where

e = width of base of the weld = 1 in.,

L = length of base plate and weld = 12 in.,

a = width of base plate = 4 in.

Therefore,

$$\sigma_t = \frac{24,225}{2(1)(12 + 4)} = 757 \text{ psi} \ .$$

To determine the stress in the weld resulting from the edge moment, the 4- by 12-in. base plate was assumed to be a uniformly loaded plate with fixed edges, and the following equation[14] was used to evaluate the maximum moment:

$$M_{max} = \beta q a^2 \ , \tag{1.4}$$

where

M_{max} = maximum unit area moment (in.·lb/in.),

β = a constant dependent on the ratio of the length (L) to the width (a) = 0.083 for the plate in question,[14]

q = load per unit area = F/(La),

a = width of plate = 4 in.

Thus,

$$M_{max} = (0.083)\ \frac{24,225}{12(4)}\ (4)^2$$

$$= 670 \text{ in.}\cdot\text{lb/in.}$$

With reference to detail C in Fig. 1.7, the bending stress in the weld

$$\sigma_b = \pm Mc/I + \pm \frac{M_{max}c_i}{b'(h')^3/12} = \pm \frac{670(0.5)(12)}{1(1)^3} \tag{1.5}$$

$$= \pm 4020 \text{ psi} .$$

With reference to detail B in Fig. 1.7, the maximum tensile stress in the weld as a result of bending is at point x, the maximum compressive stress from bending is at point y, and the bending stress at z is zero. The maximum stress at point x is

$$\sigma_{max} = \sigma_t + \sigma_b = 757 + 4020 \tag{1.6}$$

$$= 4777 \text{ psi} .$$

The shear in the weld is given by

$$\tau = \frac{F}{2(C)(L + a)}$$

$$= \frac{24,225}{2(1/2)(12 + 4)} = 1514 \text{ psi} .$$

These stresses are less than the yield strengths of the materials involved, and it was therefore concluded that the lifting eyes on the top

of the ORNL loop transport cask comply with the requirements of the regulations governing package lifting devices.

1.3.1.2 Vertical-lifting trunnions. A 3.25-in.-long trunnion with a diameter of 2.75 in. is located on each side of the cask. These two trunnions can be used to rotate the cask from a horizontal attitude to a vertical altitude and to lift it vertically. The trunnions are braced with plates, as shown in Fig. 1.8, in such a manner that the approach used to analyze them as lifting devices was similar to that for a propped beam. The deflection (Δ) of the unrestrained end (the left end in Fig. 1.9) of the beam (2.75-in.-diam bar) is numerically equal to the elastic elongation of the $5 \times 6 \times 0.5$ in. plate or bar securing the left end. The elongation of this bar is given by the following equation:

$$\Delta = \varepsilon \ell = \frac{\sigma}{E} (\ell) = \frac{R\ell}{AE} , \tag{1.7}$$

where

Δ = elongation (in.),

ε = strain (in./in.),

ℓ = length of bar = 5 in.,

σ = stress (psi),

E = modulus of elasticity = 30×10^6 psi,

R = reaction (lb),

A = cross-sectional area of the bar

= $0.5(6) = 3$ in.^{2}.

Therefore,

$$\Delta = \frac{R5}{3(30 \times 10^6)} = \frac{R}{18 \times 10^6} .$$

The beam can be considered as two beams loaded as shown in Fig. 1.9. By the principle of superposition,

ORNL DWG 75-12976

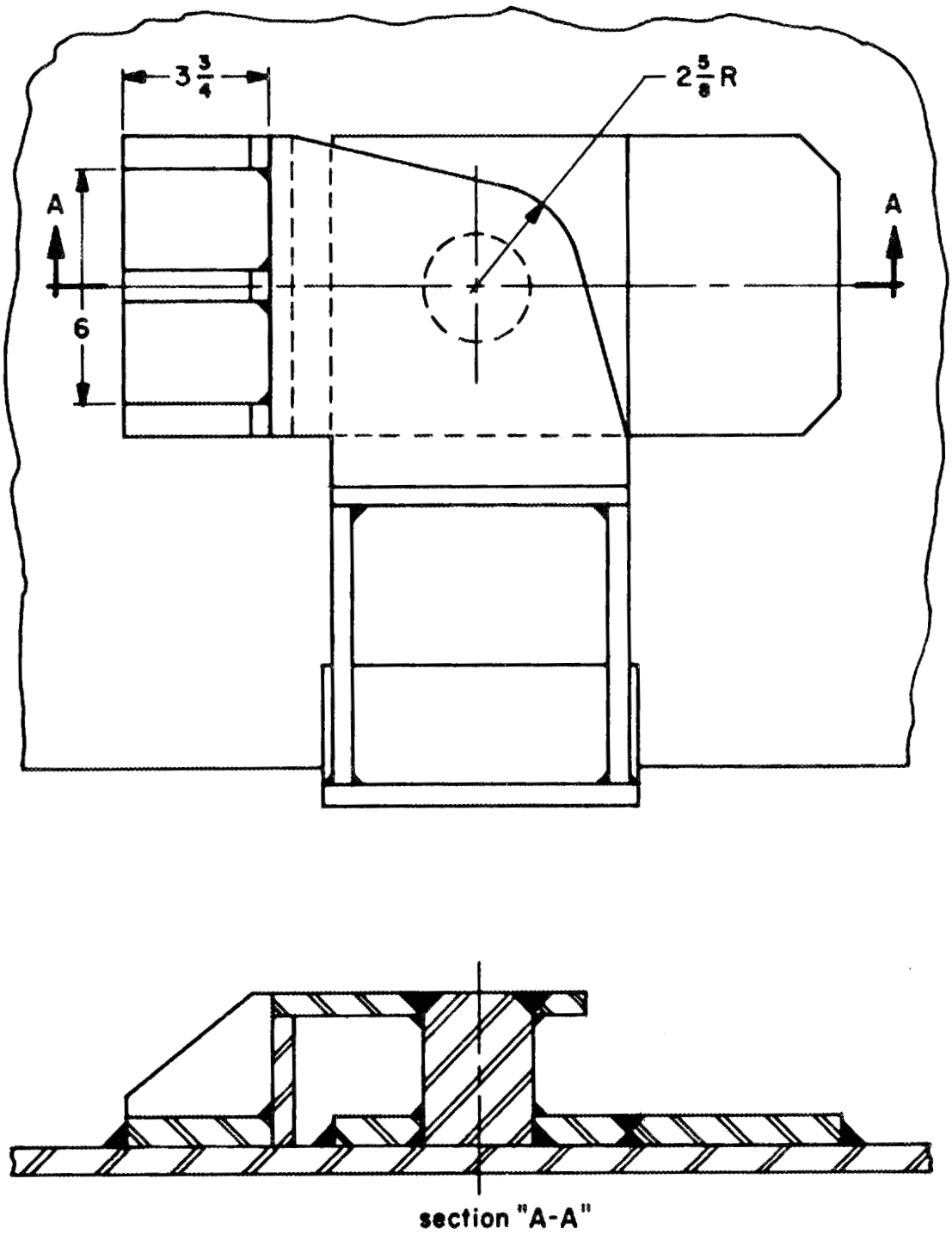

Fig. 1.8. Vertical-lifting trunnion.

ORNL DWG 75-1671

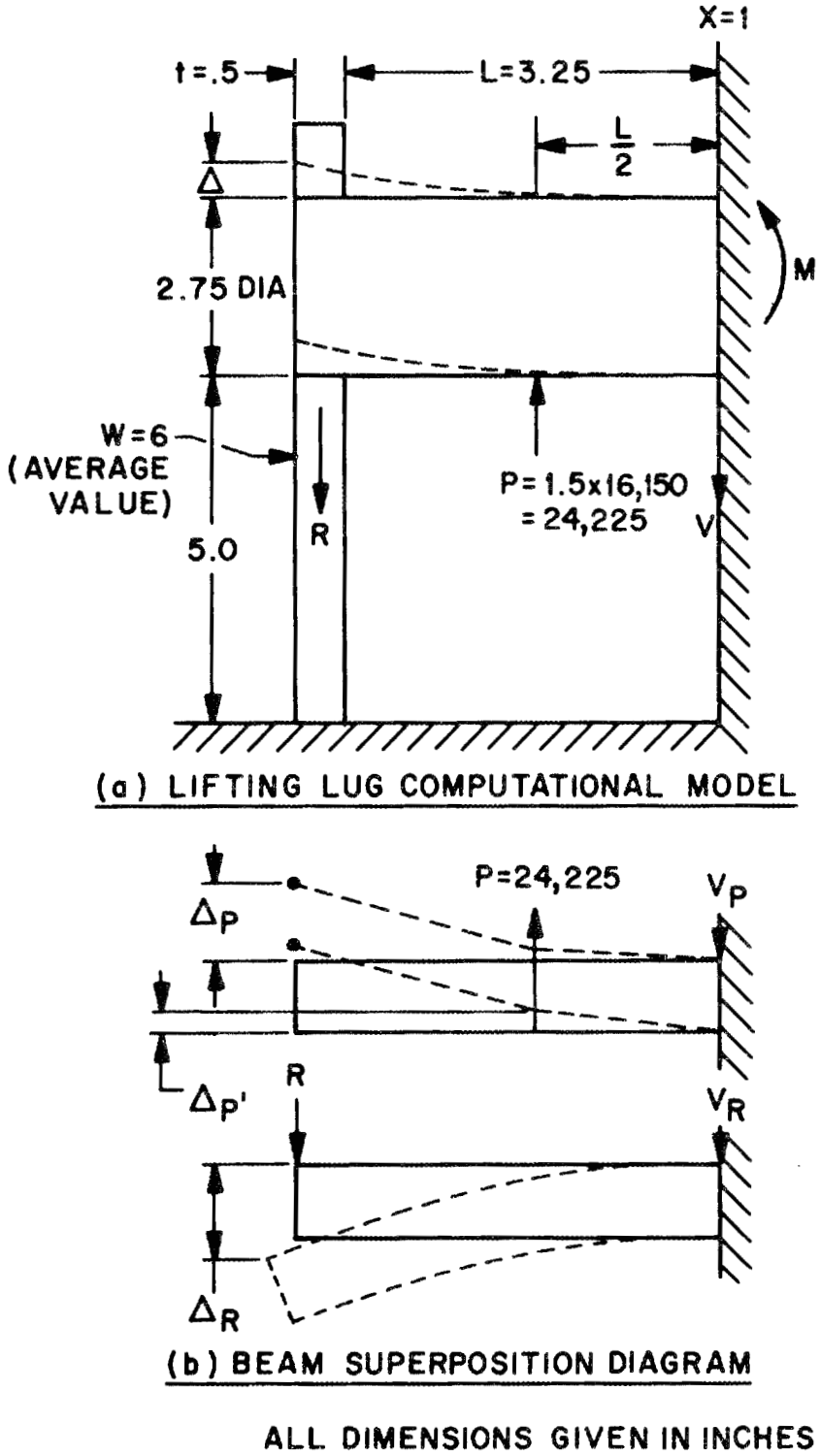

ALL DIMENSIONS GIVEN IN INCHES

Fig. 1.9. Cask-lifting device for vertical lift and turning.

$$\Delta = \Delta_R - \Delta_P \quad \text{with} \downarrow \text{positive} . \tag{1.8}$$

When expressions published by Singer[15] are substituted for Δ_R and Δ_P, Eq. (1.8) becomes

$$\Delta = \frac{RL^3}{3EI} - \frac{5PL^3}{48EI} , \tag{1.9}$$

where

L = length of beam = 3.25 in.,

I = moment of inertia (in.^{4}),

P = applied load = 1.5 times weight of loaded cask

= 24,225 lb.

Substitution of the expression for elongation of the bar from Eq. (1.7) into Eq. (1.9) yields the following expression:

$$R - \frac{3EIR}{(18 \times 10^6)(L)^3} = \frac{5P}{16} ,$$

$$R \left[1 - \frac{3EI}{(18 \times 10^6)(L)^3} \right] = \frac{5P}{16} .$$

Rearrangement of terms to solve for the reaction (R) yields the expression

$$R = \frac{5P}{16\left[1 - 3EI/(18 \times 10^6)(L)^3\right]} . \tag{1.10}$$

The moment of inertia

$$I = \frac{\pi r^4}{4} = \frac{\pi(1.375)^4}{4} = 2.8 \text{ in.}^4. \tag{1.11}$$

Therefore, the reaction

$$R = \frac{5(24,225)}{16\left[1- 3(30 \times 10^6)(2.8)/(18 \times 10^6)(3.25)^3\right]}$$

$$= 12,784 \text{ lb} .$$

The tensile stress in the plate bracing the trunnion is

$$\sigma_t = R/A = 12,784/3 = 4261 \text{ psi} . \tag{1.12}$$

The bending moment (M) at the cask wall

$$M = \frac{PL}{2} - RL \tag{1.13}$$

$$= \frac{24,225(3.25)}{2} - 12,784(3.25)$$

$$= -2200 \text{ in.}\cdot\text{lb} .$$

From the summation of vertical forces, the reaction at the cask wall (V indicated in Fig. 1.9) is

$$V = P - R = 24,225 - 12,784 = 11,441 , \tag{1.14}$$

and the bending moment in the bar at L/2 is

$$M = (VL)/2 = [11,441(3.25)]/2 = 18,592 \text{ in.}\cdot\text{lb} . \tag{1.15}$$

The maximum bending stress (σ_b) occurs at L/2 and is given by the following expression:

$$\sigma_b = \frac{MR}{I} = \frac{18,592(1.375)}{2.8} \tag{1.16}$$

$$= 9130 \text{ psi} .$$

The maximum shearing stress occurs at the neutral axis, where bending is zero. This stress in a circular beam is given by the following equation:[15]

$$\tau = (1.38) \frac{P}{\pi r^2} \tag{1.17}$$

$$= (1.38) \frac{24,225}{\pi(1.375)^2}$$

$$= 5628 \text{ psi} .$$

Since these stresses are less than the allowable, it was concluded that the trunnions comply with the requirements of the regulations governing package lifting devices.

1.3.2 Lid-lifting devices

The regulations require that if there is a system of lifting devices that is a structural part of the lid only, this system shall be capable of supporting three times the weight of the lid and any attachment without generating stress in any material of the lid in excess of its yield strength. It is further required that unless rendered useless for lifting during package transport, the lid-lifting or any other system of lifting devices shall conform to the requirements in the package lifting system.

The ORNL loop transport cask has one lid-lifting device, the handle on the access plug, and one device that might be misconstrued as a lifting device, the handle on the door plug lock at the opposite end of the cask. Both of these devices are covered by the fire shield, as illustrated in Fig. 0.1, during shipment and are therefore rendered useless for lifting of the entire package.

1.3.2.1 Access-plug handle. The handle on the access plug is a 180° segment of a ring made from bar stock with an outside diameter of 3/4 in. This handle is welded to the end plug, as shown in Fig. 1.10. The access plug weighs 177 lb, and the force on the handle during plug lifting

$$F = 3W = 3(177) = 531 \text{ lb} . \tag{1.18}$$

The maximum bending moment in the ring is at the point of loading, and it was determined by using the following equation:[16]

$$M_{max} = 0.3183FR , \tag{1.19}$$

where

F = force on the handle = 531 lb,

R = radius of handle ring = 2.375 in.

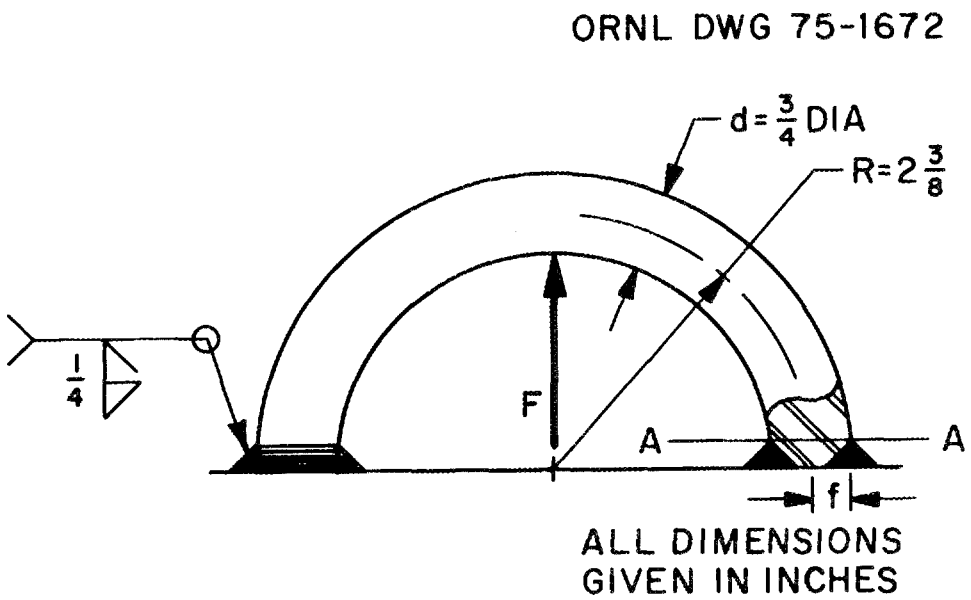

Fig. 1.10. Handle on end access plug.

Therefore,

$$M_{max} = 0.3183(531)(2.375) = 401 \text{ in.}\cdot\text{lb} .$$

From the flexure formula, the maximum bending stress at the point of loading is

$$\sigma_{b\ max} = \frac{Mc}{I} = \frac{32M_{max}}{\pi d^3} = \frac{32(401)}{\pi(0.75)^3} \tag{1.20}$$

$$= 9682 \text{ psi} .$$

The equation published by Singer[15] was used to determine the maximum shear stress in the plug handle:

$$\tau = (1.38)\ \frac{F}{\pi r^2} = \frac{1.38(531)}{\pi(0.375)^2} \tag{1.21}$$

$$= 1660 \text{ psi} .$$

The bending moment in the ring at A-A indicated in Fig. 1.10 is

$$M_{\omega} = 0.1817FR = 0.1817(531)(2.375) \tag{1.22}$$

$$= 229 \text{ in.}\cdot\text{lb} ,$$

and the bending stress

$$\sigma_b = \frac{32M_\omega}{\pi d^3} = \frac{32(229)}{\pi(0.75)^3} = 5529 \text{ psi} . \tag{1.23}$$

The direct tensile stress in the weld joint is given by the following equation:

$$\sigma_t = \frac{(F/2)}{2\pi df} , \tag{1.24}$$

where f (indicated in Fig. 1.10) = 0.25 in. Therefore,

$$\sigma_t = \frac{(531/2)}{2\pi(0.75)(0.25)} = 225 \text{ psi} .$$

The maximum stress in the plug handle

$$\sigma_{max} = \sigma_{b\ max} \tag{1.25}$$

$$= 9682 \text{ psi} .$$

These stresses are well below the yield strengths of the materials involved. It was therefore concluded that the access-plug handle conforms to the requirements of the regulations governing lid-lifting devices.

1.3.2.2 Door plug lock. The door plug lock, illustrated in Fig.0.3, serves as a closure for the cavity on the sliding-door end of the ORNL loop transport cask. The door plug lock is a tool used to position the door plug. It is not used to actually lift the door plug. The handle on the exterior of the door plug lock is fabricated of stainless steel bar stock with an outside diameter of 5/8 in., and it is attached to the stainless steel plug lock with four 5/16-in.-diam stainless steel machine screws. The location of these screws is easily identified as the "weak link" in the design of the door plug lock. The four screws are located so that two of them are loaded significantly before the other two begin to share the load. Thus the load handling capacity of the handle on the door plug lock is governed by the pullout or breaking strength of two of the 5/16-in.-diam screws.

The load shared by the two screws is

$$P = 3W = 3(92) = 276 \text{ lb} , \tag{1.26}$$

where W = weight of the plug. The shear area (A_s) for one 5/16-18NC internal-thread screw is 0.6036 in.^{2} per inch of thread engagement. Since the thread engagement length (L) is 0.25 in., the shear stress on the threads of the two screws is given by the following equation:

$$\tau = \frac{P}{2A_s L} = \frac{276}{2(0.6036)(0.25)} \tag{1.27}$$

$$= 915 \text{ psi} .$$

The tensile stress in the screws is given by the equation

$$\sigma_t = P/2A_t , \tag{1.28}$$

where

A_t = stress area of one 5/16-18NC screw

= 0.0524 in.^{2} (ref. 17),

$\sigma_t = 276/[2(0.0524)] = 2634$ psi.

Since the tensile stress is less than the 30,000-psi yield strength of the 300-series stainless steel and since the shearing stress is less than half of the yield strength, it was concluded that the door plug lock complies with the requirements of the regulations governing lid-lifting devices. If under extreme loading the lid-lifting device failed, the damage would be local and would not impair the function of the cask.

1.3.3 Tie-down devices

If there is a system of tie-down devices that is a structural part of the package, the regulations require that this system be capable of withstanding a static force applied to the center of gravity of the package with a vertical component of two times the weight of the package and its contents, a horizontal component along the direction of travel

of ten times the weight of the package and its contents, and a horizontal component in the transverse direction of five times the weight of the package and its contents. This applied force shall not generate stresses in any material of the package in excess of the yield strength of that material. It is also required that any tie-down device that is a structural part of the package shall be so designed that failure of the device under excessive load will not impair the ability of the package to meet other requirements of the regulations.

The ORNL loop transport cask is tied down for transport as shown in Figs. 1.11 and 1.12. Tension members are attached to the cask-lifting eyes and secured to the bed of the transporting vehicle. The base of the cask can be chocked or restrained in any direction. Although restraint of this type does lessen the load on the cask-lifting eyes, it is not required for stability. The effects of such restraints were neglected in this analysis, in which the principle of superposition was used. The load in each tie-down member resulting from individually applied loads was calculated first. After those tension forces were found, the results were added to obtain the load resulting from the simultaneous application of the three acceleration loads. For these calculations, the tie-down members were assumed to be rigid, massless rods. If a calculation resulted in compression loading in a member, that member was removed or disregarded and the calculation was repeated. With reference to the notation in Fig. 1.11, general relationships applicable to the components of force on the cask-lifting eyes and the tension (T) in the tie-down cables are as follows:

$$F_2 = T(H/L) , \qquad H/L = 1/3^{1/2},$$

$$F_y = T(I/L) , \qquad I/L = 1/3^{1/2},$$

$$F_x = T(J/L) , \qquad J/L = 1/3^{1/2}.$$

The 5W side-load case (illustrated in view B of Fig. 1.11) was analyzed first. When the system was analyzed with both P_1 and P_2 as active members, P_1 was calculated to carry a compressive load. Since P_1 is a cable member and cannot sustain compression, the calculation was repeated without P_1. To avoid overspecification of the system, the

ORNL DWG 75-1673

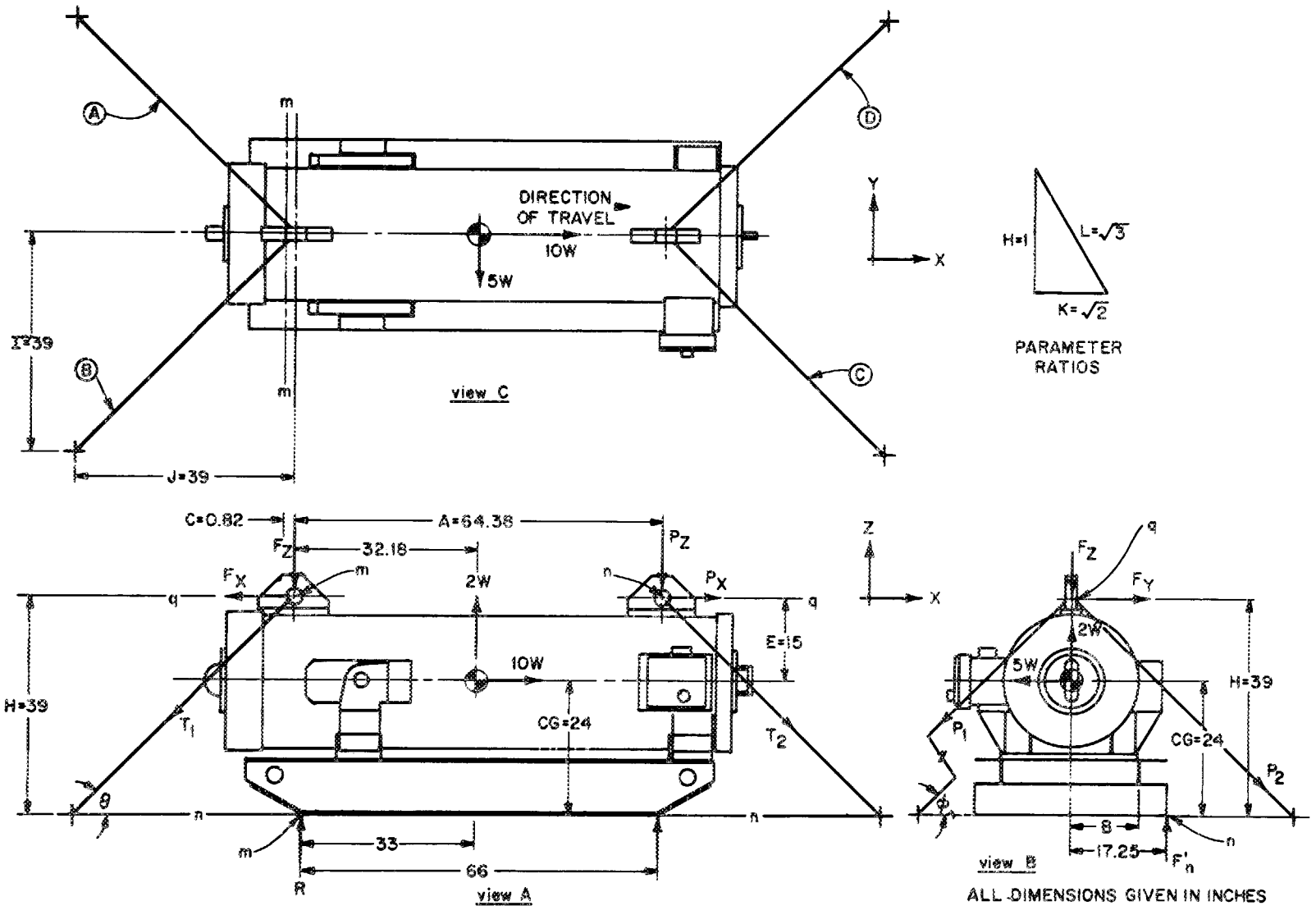

Fig. 1.11. Schematic diagram of tie-down arrangement for the ORNL loop transport cask.

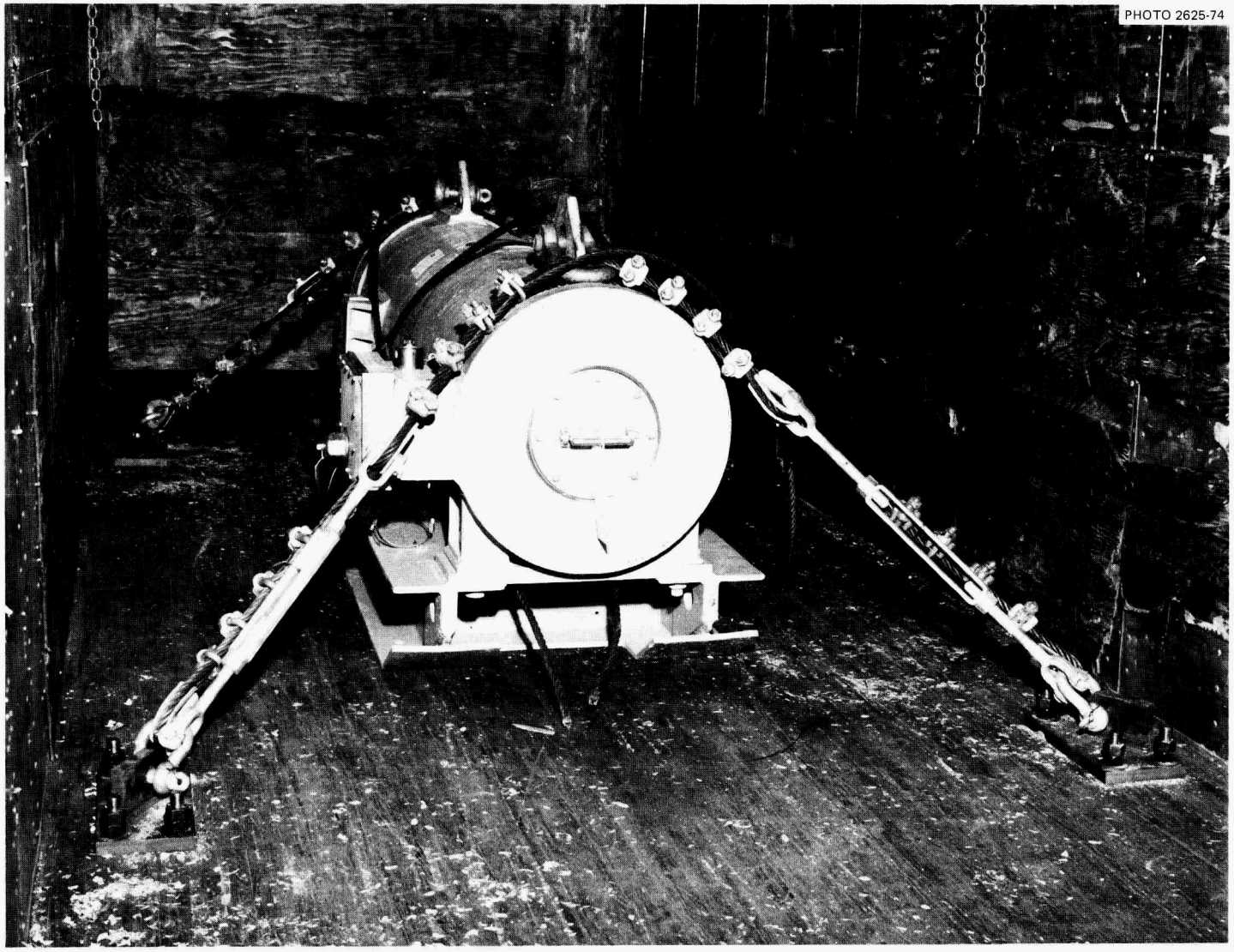

Fig. 1.12. Cask tie-down.

distance B to the point where the load is applied is a variable. Summation of the horizontal forces yields

$$P_2(\cos\phi) - 5W = 0 \ . \tag{1.29}$$

Summation of vertical forces yields

$$-P_2(\sin\phi) + F'_n = 0 \ . \tag{1.30}$$

Summation of moments about the plane q-q (view A in Fig. 1.11) yields

$$5W(15) - F'_n(B) = 0 \ . \tag{1.31}$$

Solution of Eqs. (1.29), (1.30), and (1.31) for the unknowns L, B, and P_2 yielded the values

$$F'_n = 5W,$$

$$B = 15 \text{ in.},$$

$$P_2 = 7.071W,$$

where W = weight of the loaded cask. The resulting values indicate that the load on the cask base is a distributed one whose centroid is at B = 15 in. The tension forces in tie-down members A and D are both active in carrying P_2, but members B and C are not. The tension in member A resulting from the 5W load is

$$T_{A_5} = (P_2/2)(3^{1/2}/2^{1/2}) = 4.33W \ ; \tag{1.32}$$

the tension in member D resulting from the 5W load is

$$T_{D_5} = (P_2/2)(3^{1/2}/2^{1/2}) = 4.33W \ ; \tag{1.33}$$

the tension in members B and C resulting from the 5W load is

$$T_{B_5} = T_{C_5} = 0 \ . \tag{1.34}$$

The effects of the 10W load in the direction of travel (illustrated in view C of Fig. 1.11) were analyzed next. Summation of horizontal forces yields

$$-T_1(\cos\theta) + T_2(\cos\theta) + 10W = 0 \ . \tag{1.35}$$

Summation of vertical forces yields

$$R - T_1(\sin\theta) - T_2(\sin\theta) = 0 \ . \tag{1.36}$$

Summation of moments about plane m-m in view C of Fig. 1.11 yields

$$-T_1(\cos\theta)(39) + T_1(\sin\theta)(0.82) + T_2(\cos\theta)(39) + T_2(\sin\theta)(65.2) + 10W(24) = 0 \ . \tag{1.37}$$

When $\theta = 45°$, solution of the preceding simultaneous equations for unknowns T_1, T_2, and R yields the following values:

$T_1 = 17.16W$,

$T_2 = 3.04W$,

$R = 14.30W$.

Since these values are all positive, the assumed tension forces were correct. The tension in member A resulting from the 10W load in the direction of travel is

$$T_{A_{10}} = (T_1/2)(3^{1/2}/2^{1/2}) = 10.51W \ ; \tag{1.38}$$

the tension in member B resulting from the 10W load is

$$T_{B_{10}} = (T_1/2)(3^{1/2}/2^{1/2}) = 10.51W \ , \tag{1.39}$$

the tension in member C resulting from the 10W load is

$$T_{C_{10}} = (T_2/2)(3^{1/2}/2^{1/2}) = 1.86W \ ; \tag{1.40}$$

the tension in member D resulting from the 10W load is

$$T_{D_{10}} = (T_2/2)(3^{1/2}/2^{1/2}) = 1.86W \ . \tag{1.41}$$

The last acceleration loading condition involves a vertically upward 2W load (illustrated in Fig. 1.11) that has a net resultant of W upward when the weight of the cask is subtracted from the acceleration load. With reference to view A in Fig. 1.11,

$$F_z = P_z = W/2 \ , \tag{1.42}$$

since there are two cables involved at each loading point. Therefore, the tension (T) in members A, B, C, and D resulting from the 2W load is

$$T_{A_2} = T_{B_2} = T_{C_2} = T_{D_2} = (W/4)(L/H) = 0.433W \ . \tag{1.43}$$

The total tension in each cable member was determined by combining the tensions resulting from each of the three acceleration loads as follows. The total tension in member A is

$$T_A = T_{A_5} + T_{A_{10}} + T_{A_2} \tag{1.44}$$

$$= 4.33W + 10.51W + 0.43W$$

$$= 15.27W.$$

The total tension in member B is

$$T_B = T_{B_5} + T_{B_{10}} + T_{B_2} = 0 + 10.51W + 0.43W = 10.94W \ . \tag{1.45}$$

The total tension in member C is

$$T_C = T_{C_5} + T_{C_{10}} + T_{C_2} = 0 + 1.86W + 0.43W = 2.29W \ . \tag{1.46}$$

The total tension in member D is

$$T_D = T_{D_5} + T_{D_{10}} + T_{D_2} = 4.33W + 1.86W + 0.43W = 6.62W \ . \tag{1.47}$$

Inasmuch as the total tension in members A and B is greater than that in members C and D, the rear eye (with respect to the direction of travel) is the most loaded. The x, y, and z components of force acting on the rear cask-lifting and tie-down eye were determined as follows:

$$F_x = (T_A + T_B)(J/L) = (15.27W + 10.94W)(1/\sqrt{3}) \tag{1.48}$$

$$= 15.13W \ .$$

$$F_y = (T_A + T_B)(I/L) = [1527W + (-10.94W)](1/\sqrt{3}) \tag{1.49}$$

$$= 2.50W \ .$$

$$F_z = (T_A + T_B)(H/L) = (15.27W + 10.94W)(1/\sqrt{3}) \tag{1.50}$$

$$= 15.13W \ .$$

The resultant load (F_R) in the plane of the rear cask-lifting and tie-down eye is given by the following equation:

$$F_R = (F_x^2 + F_z^2)^{1/2} = W[(15.13)^2 + (15.13)^2]^{1/2} \tag{1.51}$$

$$= 21.4W \ .$$

The maximum bending stress at plane A-A (illustrated in Fig. 1.13) in the rear lifting and tie-down eye resulting from the F_y component of force is given by the following expression:

$$\sigma_{b_1} = \pm \frac{Mc}{I} = \pm \frac{1.5F_y(2)}{I_{xx}} \ . \tag{1.52}$$

At plane A-A,

$$I_{xx} = \Sigma\ (bh^3/12) \tag{1.53}$$

$$= \frac{12(2)^3}{12} + (2)\ \frac{1(4)^3}{12}$$

$$= 18.67 \text{ in.}^4 .$$

Therefore,

$$\sigma_{b_1} = \pm[1.5(2.5)(16,150)(2)]/18.67 = \pm 6488 \text{ psi} \ .$$

The maximum bending stress at plane A-A in the lifting and tie-down eye resulting from the F_x component of force is given by the following equation:

ORNL DWG 75-1674

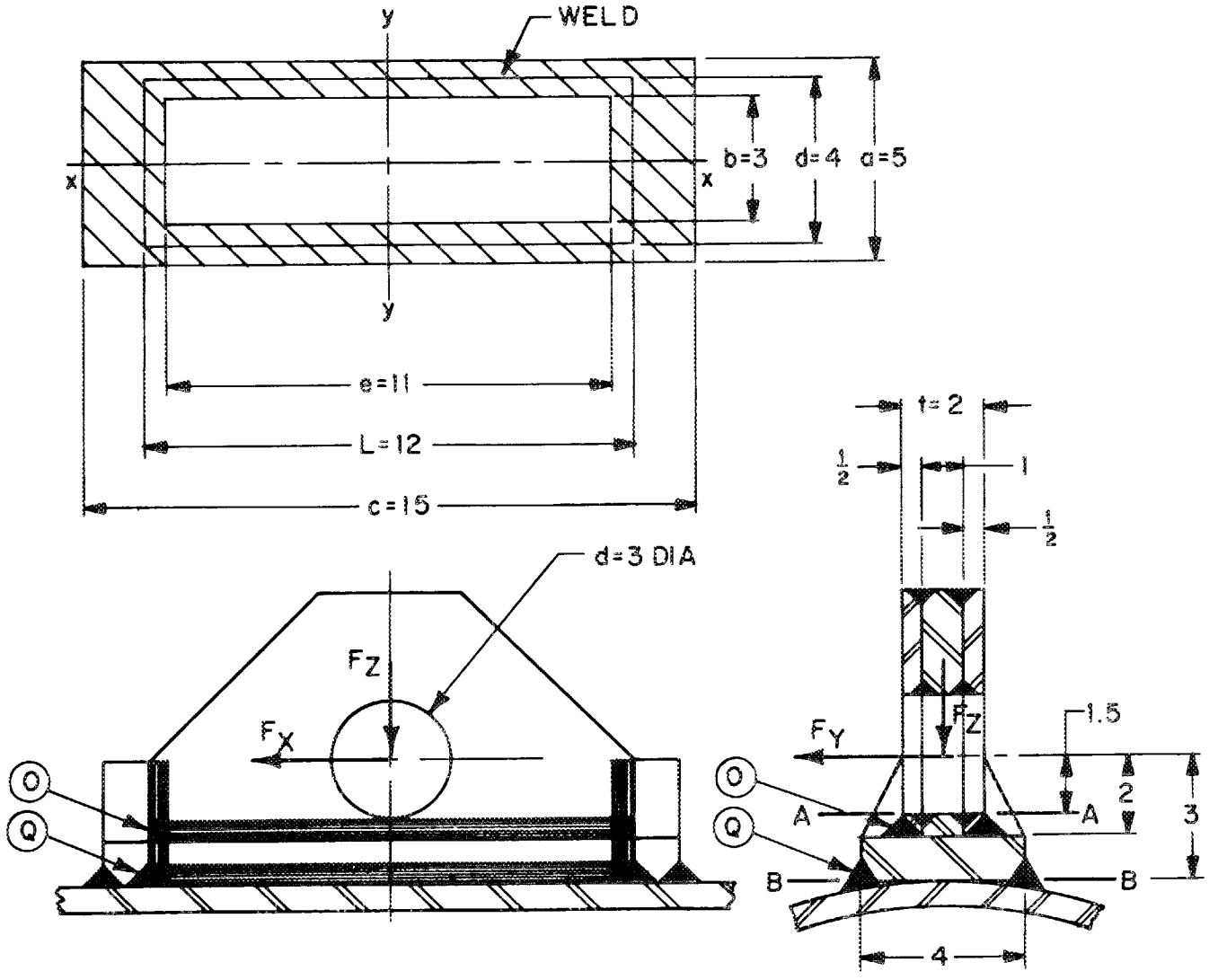

ALL DIMENSIONS GIVEN IN INCHES

Fig. 1.13. Cask-lifting and tie-down eye.

$$\sigma_{b_2} = \pm \frac{Mc}{I} = \pm \frac{1.5F_x(7)}{I_{yy}} . \tag{1.54}$$

At plane A-A,

$$I_{yy} = \Sigma\, bh^3 + \Sigma\, ad^2 \tag{1.55}$$

$$= \frac{2(12)^3}{12} + \frac{4(1)^3}{12}(2) + [4(1)(6.5)^2](2)$$

$$= 626.67 \text{ in.}^4.$$

Therefore,

$$\sigma_{b_2} = \pm[1.5(15.13)(16,150)(7)]/626.67 = \pm 4094 \text{ psi} .$$

The average compressive stress resulting from the F_z component of force is given by the equation

$$\sigma_c = -(F_z/A) , \tag{1.56}$$

where

$$A = \text{area} = 2(12) + 2[4(1)] = 32 \text{ in.}^2.$$

Therefore,

$$\sigma_c = -[15.13(16,150)]/32 = -7636 \text{ psi} .$$

The maximum normal compressive stress at plane A-A occurs at point 0 (illustrated in Fig. 1.13) and is given by the following equation:

$$\sigma_n = -\sigma_{b_1} - \sigma_{b_2} - \sigma_c \tag{1.57}$$

$$= -6488 - 4094 - 7636 = -18,218 \text{ psi} .$$

The shearing stress (τ) at plane A-A in the lifting and tie-down eye is given by the equation

$$\tau = \frac{(F_y^2 + F_x^2)^{1/2}}{A} , \tag{1.58}$$

where

A = area = 32 in.^{2}.

Therefore,

$$\tau = \frac{[(2.5)^2 + (15.13)^2]^{1/2}(16,150)}{32} = 7740 \text{ psi} .$$

From Mohr's circle, the maximum principal stress at plane A-A is

$$\sigma_{max} = \frac{\sigma_n}{2} \pm \left[\left(\frac{\sigma_n}{2}\right)^2 + \tau^2\right]^{1/2} \tag{1.59}$$

$$= -9109 - [(9109)^2 + (7740)^2]^{1/2}$$

$$= -21,062 \text{ psi} .$$

The bending stress at plane B-B (illustrated in Fig. 1.13) in the rear lifting and tie-down eye resulting from the F_y component of force is given by the following equation:

$$\sigma_{b_1} = \pm \frac{Mc}{I} = \pm \frac{3F_y(a/2)}{I_{xx}} . \tag{1.60}$$

At plane B-B ,

$$I_{xx} = (ca^3 - eb^3)(1/12) \tag{1.61}$$

$$= [15(5)^3 - 11(3)^3](1/12)$$

$$= 131.5 \text{ in.}^4.$$

Therefore,

$$\sigma_{b_1} = \pm \frac{3(2.5)(16,150)(2.5)}{131.5} = \pm 2303 \text{ psi} .$$

The bending stress at plane B-B resulting from the F_x component of force is given by the equation

$$\sigma_{b_2} = \pm \frac{Mc}{I} = \pm \frac{3F_x(c/2)}{I_{yy}} . \tag{1.62}$$

At plane B-B,

$$I_{yy} = (ac^3 - be^3)(1/12) \tag{1.63}$$

$$= [5(15)^3 - 3(11)^3](1/12)$$

$$= 1073.5 \text{ in.}^4.$$

Therefore,

$$\sigma_{b_2} = \pm \frac{3(15.13)(16,150)(7.5)}{1073.5} = \pm 5121 \text{ psi} .$$

The average compressive stress at plane B-B resulting from the F_z component of force is given by the equation

$$\sigma_c = -(F_z/A) , \tag{1.64}$$

where A = area = ca - eb = 15(5) - 11(3) = 42 in.^{2}. Thus,

$$\sigma_c = -[15.13(16,150)]/42 = -5818 \text{ psi} .$$

The maximum normal compressive stress (σ_n) in plane B-B occurs at point Q (illustrated in Fig. 1.13) and is given by the following equation:

$$\sigma_n = -\sigma_{b_1} - \sigma_{b_2} - \sigma_c \tag{1.65}$$

$$= -2303 - 5121 - 5818$$

$$= -13,242 \text{ psi} .$$

The shearing stress (τ) at plane B-B in the lifting and tie-down eye is given by the equation

$$\tau = \frac{(F_x^2 + F_y^2)^{1/2}}{A} , \tag{1.66}$$

where A = area = 42 in.^{2}. Therefore,

$$\tau = \frac{[(15.13)^2 + (2.5)^2]^{1/2}(16,150)}{42} = 5897 \text{ psi} .$$

From Mohr's circle, the maximum principal stress at plane B-B is

$$\sigma_{max} = \frac{\sigma_n}{2} \pm \left[\left(\frac{\sigma_n}{2}\right)^2 + \tau^2\right]^{1/2} \tag{1.67}$$

$$= -6621 - [(6621)^2 + (5897)^2]^{1/2}$$

$$= -15,487 \text{ psi} .$$

Since all of the normal stresses in the most loaded lifting and tie-down eye were calculated to be less than the yield strength of the material, and the shearing stresses were less than the allowable shearing stress, it was concluded that the ORNL loop transport cask complies with the requirements of the regulations governing tie-down devices. Various tie-down geometries are possible when securing the shipping container to the transport vehicle. The most likely tie-down geometry was used in the analysis, which showed that normal stresses are less than the yield point, 30,000 psi, for stainless steel, and shear stresses are less than the allowable shear stress. If under extreme load the tie-down device fails, damage will be localized to the area of the tie-down lug. This area of the container does not contribute to the function of the shipping container. Failure would not impair the containment or shielding properties of the overall package.

1.4 Structural Standards for Packaging

The structural standards for large-quantity packaging cover load resistance of the packaging and the external pressure which the package must withstand. Compliance of the ORNL loop transport cask with these requirements is discussed in the following subsections.

1.4.1 Load resistance

When regarded as a simple beam supported at its ends along any major axis, the package must be capable of withstanding a static load

normal to and uniformly distributed along its length that is equal to five times its fully loaded weight without generating stress in any material of the package in excess of the yield strength of that material.

When the lead shielding and the inner cavity liner are not considered, the cross section of the outer shell of the ORNL loop transport cask is equivalent to that of a 24-in.-diam sched-40 steel pipe. When the cask is considered as a simple beam supported at its ends, as illustrated in Fig. 1.14, the maximum bending moment in the outer shell occurs at L/2. The maximum bending stress in the outer shell of the cask is given by the equation

$$\sigma_b = \frac{Mc}{I} = \frac{5WLc}{8I} = \frac{5WLr}{8I} , \tag{1.68}$$

where

σ_b = maximum bending stress (psi),

M = maximum bending moment (in.·lb),

W = weight of loaded cask = 16,150 lb,

L = length of member = 89.37 in.,

r = radius of cask = 12 in.,

I = moment of inertia = 3424 in.^{4} (from ref. 17).

Therefore, the maximum bending stress is

$$\sigma_b = \frac{5(16,150(89.37)(12)}{8(3424)} = 3162 \text{ psi} .$$

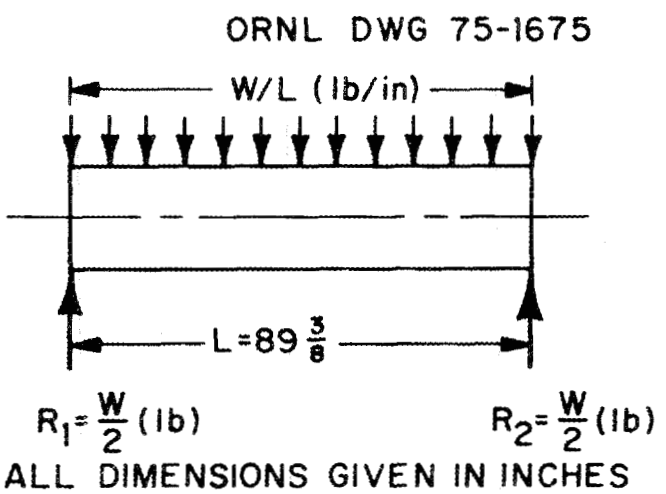

Fig. 1.14. Cask as a simple beam.

This stress is less than the yield strength of the material (30,000 psi), and it was concluded that the ORNL loop transport cask complies with the requirements of the regulations governing load resistance.

1.4.2 External pressure

The regulations require that the shipping package be adequate to assure that the containment vessel will suffer no loss of contents if subjected to an external pressure of 25 psig.

Primary containment in the ORNL loop transport cask is provided by either the metal cladding on the fuel elements or the experimental capsules being transported, or by a Specification 2R container.[4] The contents of the cask would not be subjected to the external pressure unless the cask body or seals failed. Gaskets of the type employed for the cask closures are used routinely at pressure differentials greater than 25 psig without leakage.

When subjected to an external pressure of 25 psig, the maximum stress in the body of the ORNL loop transport cask would occur in the flat plate at the access plug end of the cask. This plate is 3/8 in. thick and has a diameter of 24 in. For computational purposes, the model of this plate illustrated in Fig. 1.15 was assumed, and support contributed by the lead shield was neglected. An equation published by Timoshenko[14] that is applicable to this model was used to determine the maximum stress in the flat plate:

$$\sigma_{max} = (kqa^2)/h^2 \ , \tag{1.69}$$

where k is a constant whose value is dependent on the ratio of a/b. For the model assumed, k = 0.8.[14] Therefore, the maximum stress

$$\sigma_{max} = [0.8(25)(12)^2]/(0.375)^2 = 20{,}480 \text{ psi} \ .$$

Since this stress is below the yield strength of the material, it was concluded that secondary containment would be maintained if the ORNL loop transport cask were subjected to an external pressure of 25 psig. It was also concluded that the 2R container and capsule cladding would

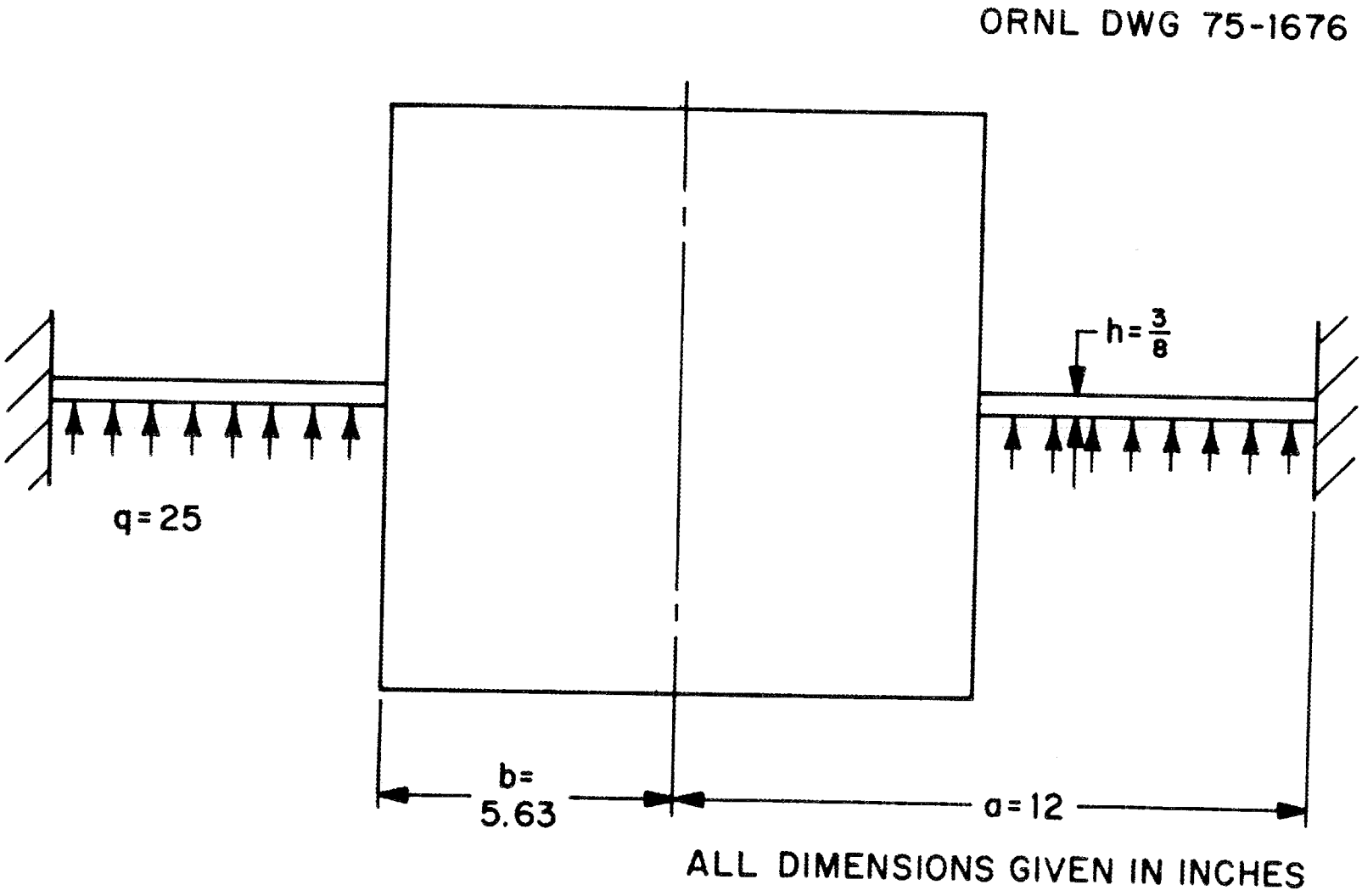

Fig. 1.15. Computational model of cask end plate.

withstand the application of an external pressure of 25 psig even if the secondary containment (package) were breached.

1.5 Standards for Normal Conditions of Transport

The regulations for normal conditions of transport for a single package require that the effectiveness of the package will not be substantially reduced by the normal conditions of transport and that there will be no release of radioactive material from the containment vessel. The contents of the ORNL loop transport cask are so limited that there will be no gases or vapors in the package that could reduce the effectiveness of the packaging. There is no circulating coolant other than atmospheric air provided for in this cask, and no mechanical cooling device is required or provided. The cask and inner container(s) are so designed that the contents will not be vented to the atmosphere under normal conditions of transport. These normal conditions include the effects of heat, cold, pressure, free drop, and penetration.

1.5.1 Heat

During normal transport, the cask is subjected to solar heat loads as well as the decay heat from its contents. The ERDA regulations[2] stipulate that the package must be able to withstand direct sunlight in still air at an ambient temperature of 130°F without reducing the effectiveness of the packaging. For this case, the maximum permissible internal heat load of 1000 W was assumed. Further, the Department of Transportation (DOT) regulations[3] stipulate that the temperature of any accessible surface of the fully loaded shipping package in the shade in still air at an ambient temperature shall not exceed 122°F when the package is shipped by common carrier, and 180°F when the package is transported on a sole-use vehicle. In this case, ambient temperature was assumed to be 100°F, and internal decay-heat loads of 500 and 1000 W were assumed.

The computer program HEATING-3,[18] modified to evaluate phase change of materials, was used to compute the steady-state temperature distribution in the package and its contents under the specified conditions.

The dimensional model used for these evaluations, the input assumptions and constants, and the temperatures computed at locations of concern are given and discussed in Sect. 2 of this document.

1.5.1.1 Temperature effects. Study of the steady-state temperature distributions given in Sect. 2 reveals that the most damaging thermal gradients result when the cask has an internal heat load of 1000 W and is subjected to direct sunlight in still air at an ambient temperature of 130°F. However, the resulting temperatures will not affect the cask adversely. There are no temperature differences large enough to result in damaging thermal stresses, and the cask materials will not suffer a significant loss of physical properties at the computed temperatures. The continuous operating temperature limit of 500°F for the silicone rubber O-rings[19] in the 2R container is greater than the maximum computed temperature of 390°F for these seals. The computed temperatures of all of the secondary seals are below the 300°F continuous service temperature of neoprene.[19] The pressures resulting from the temperatures of this case (given in Sect. 2) will have no adverse effect on the cask or its contents.

The maximum temperature of any accessible surface of the cask in the shade in still air at an ambient temperature of 100°F was computed to be 120°F when the internal heat load of the cask was 500 W. This maximum temperature occurred at midpoint of the bottom of the cask and is less than the allowable temperature of 122°F for transport by common carrier. With an internal heat load of 1000 W, the maximum temperature of any accessible surface of the cask was computed to be 140°F, which is less than the allowable temperature of 180°F for transport by a sole-use vehicle.

1.5.1.2 Thermal expansion stresses. The ORNL loop transport cask is constructed of materials whose coefficients of thermal expansion differ considerably. The coefficient of thermal expansion for the lead shielding is 16.3×10^{-6} in./in. per °F, while that for carbon steel is 6.5×10^{-6} in./in. per °F, and that for stainless steel is 9.2×10^{-6} in./in. per °F (see Table 1.1). As the temperature of the cask is

increased, the lead will expand more than the carbon steel outer shell of the cask or the stainless steel liner for the cask cavity. As a result of this differential thermal expansion, the outer shell of the cask is placed in longitudinal and radial tension, the inner cavity liner is placed in longitudinal tension, and the lead is loaded in both radial and longitudinal compression.

The computer program FEATS,[20] a finite-element program, was used to evaluate the thermal expansion stresses for the heat condition of normal transport. The simplified thermal expansion model shown in Fig. 1.16 was assumed for these calculations. It was also assumed that the cask cavity was completely full of lead and that there were no thermal expansion stresses in the cask when the entire cask was at a temperature of 70°F. The steady-state temperature distribution in the cask resulting from an internal decay heat load of 1000 W and exposure to direct sunlight in still air at an ambient temperature of 130°F (see Table 2.2 for examples) was input to FEATS. The computed stresses at points of interest identified in Fig. 1.16 are given in Table 1.2.

These stresses in Table 1.2 are below the endurance limits of the cask materials of construction. It was therefore concluded that the ORNL loop transport cask will not fail or experience a reduction in effectiveness as a result of thermal expansion stresses caused by the heat condition of normal transport. If higher expansion stresses than those computed did exist for a nonhomogeneous or concentrated heat source, they would not be of serious consequence, since expansion stresses beyond yield are self-limiting. Such stresses would therefore exist only for a small number of cycles.

1.5.2 Cold

The shipping package must be able to withstand an ambient temperature of -40°F in still air and shade. When the condition of no internal heat load is assumed and the perfect-gas laws are used, the pressure (p_2) at a temperature (T_2) of -40°F (420°R) in any cask cavity sealed at a pressure (p_1) of 14.7 psia and a temperature (T_1) of 70°F (530°R) is

$$p_2 = (p_1 T_2)/T_1 = [14.7(420)]/530 = 11.65 \text{ psia} . \qquad (1.70)$$

ORNL DWG 75-1668

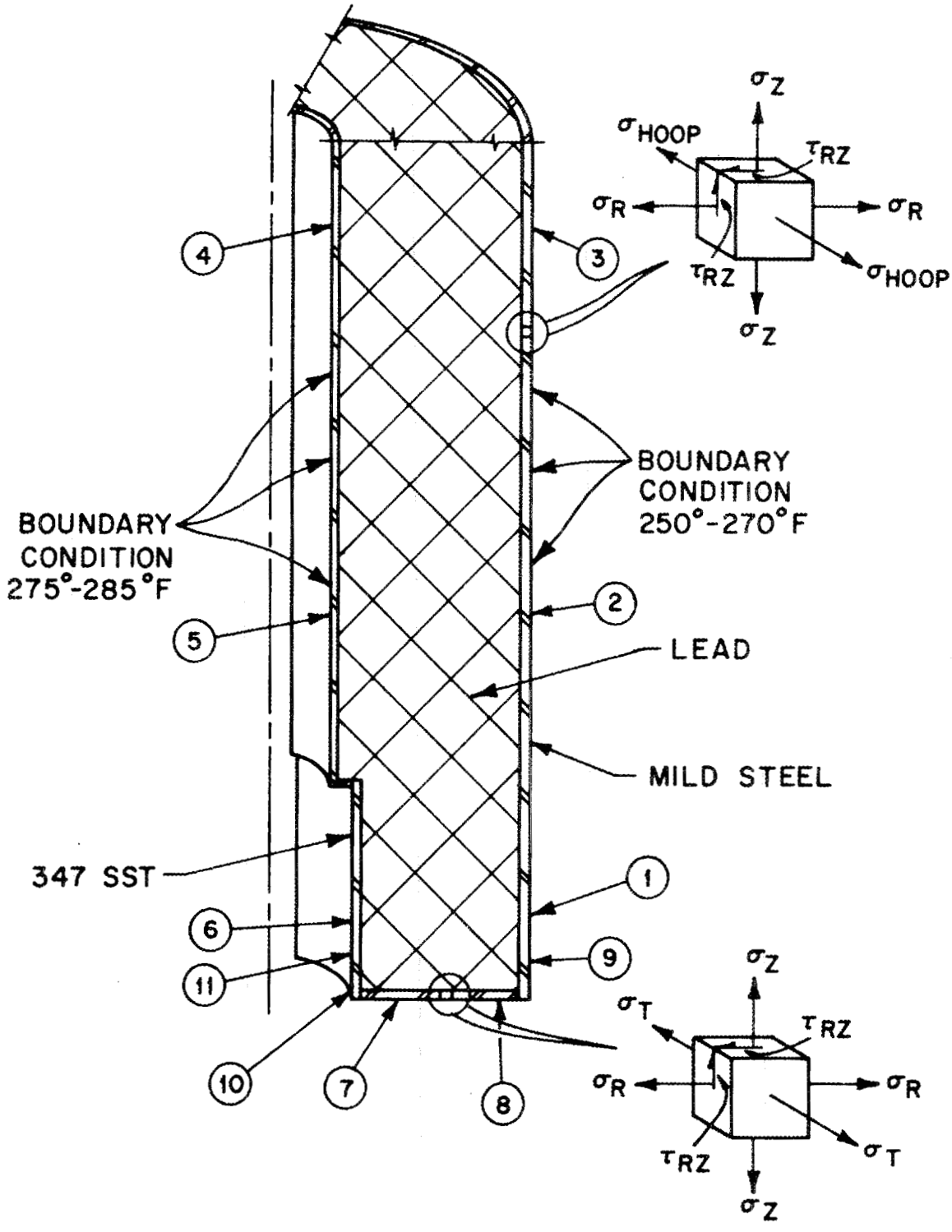

Fig. 1.16. FEATS thermal expansion model.

Table 1.2. FEATS thermal expansion stresses resulting from normal transport conditions of 130°F ambient, solar heat load, and 1000-W internal heat load

Point number (Fig. 1.15)	FEATS element number	RZ Mohr's circle stress			T or hoop stress (psi)	Shear stress (psi)
		Maximum (psi)	Minimum (psi)	Angle (°)		
1	98	590	-730	38.5	-2,520	640
2	362	1,900	-70	0.0	3,420	-15
3	562	2,080	-30	0.0	3,380	0
4	543	-100	-11,800	90.0	-5,150	0
5	343	-100	-10,700	90.0	-5,000	50
6	85	-80	-7,970	-82.0	-9,840	-170
7	17	1,550	-400	89.0	7,070	35
8	24	460	-1,580	22.0	3,240	700
9	68	10,700[a]	2,180	15.0	2,440	2,150
10	29	-160	16,300[a]	89.0	16,260	200
11	57	1,980	-10,040	64.0	-24,600[a]	4,750

[a]Indicates that these are absolute maximum point stresses incurred in these orientations for the entire cask.

The resulting pressure differential is not significant when compared with the 25 psig external pressure the package must withstand (Sect. 1.4.2).

A temperature of -40°F is within the operating temperature range of the materials of the ORNL loop transport cask. Brittle fracture of the Specification 2R container or the metal cladding on a fuel element or experimental capsule under the stipulated cold condition is not credible, since the ductile-to-brittle transition temperature of the materials involved is below -40°F. This is also true for all threaded fasteners and the cask cavity liner. However, the outer shell of the cask, flat heads, lifting and tie-down devices, and the support structure are fabricated of low-carbon steel whose transition temperature is above -40°F. Although these members would undergo a loss of ductility under the specified cold condition, they operate under very small loads during normal transport and failure is not likely. If one of these members

were to fail, primary containment would be maintained, and the shielding capability of the cask would not be compromised. Such a failure would be detected by routine inspection, and repair would be effected before further use of the cask. It is therefore concluded that the ORNL loop transport cask is in compliance with the requirements of the regulations governing the cold condition of normal transport.

1.5.3 Pressure

The regulations for normal conditions of transport specify that the package be able to withstand an atmospheric pressure of 0.5 times the standard atmospheric pressure, the resulting pressure being 7.35 psia. This atmospheric pressure is additive to the internal pressures attributable to the elevated temperatures resulting from atmospheric conditions and decay heat from the cask contents (Sects. 1.5.1 and 2). The resulting pressure differential between any part of the cask body or plug and the atmosphere will not exceed 7.35 + 5.8 = 13.8 psig (Sect. 2.3.3). The gaskets in the cask are adequate to withstand a pressure differential of 121 psi.

The hoop stress in the outer shell of the cask resulting from the pressure differential is given by the equation

$$\sigma_h = (pr)/t \ , \tag{1.71}$$

where

σ_h = hoop stress (psi),

p = pressure = 13.8 psig,

r = radius of cask shell = 11.3 in.,

t = thickness of shell = 0.69 in.

Thus the hoop stress

$$\sigma_h = [13.8(11.3)]/0.69 = 226 \text{ psi} \ .$$

By comparison, it can be seen that the stress in the flat plate of the cask resulting from the 13.8 psig pressure will be less than that resulting from the 25 psig external pressure (Sect. 1.4.2), and that

the yield strength of the material will not be approached as a result of this pressure. It can be determined by inspection that the stress in the end-plug cladding will be less than that in the cask shell. The reduced atmospheric pressure would have no effect on primary containment unless secondary containment failed. If this were to occur, the resulting pressure differential (Sect. 2.2.3) of 7.35 + 10.3 = 17.7 psig is less than the design pressure of the 2R container. It is therefore concluded that the ORNL loop transport cask complies with the requirements of the regulations governing pressure under normal conditions of transport.

1.5.4 Vibration

The regulations require the package to withstand vibration normally incident to transport under normal conditions. The integrity of the ORNL loop transport cask has not been affected by transport vibration in the past. Inner containers are of welded construction, and all cask fasteners are equipped with lock washers and will not loosen as a result of transport vibration.

1.5.5 Water spray

The regulations require that the package withstand a water spray sufficiently heavy to keep the entire exposed surface, except the bottom, wet continuously during a period of 30 min. The exposed surfaces of the ORNL loop transport cask are of painted steel and will be unaffected by water spray. Since all cask penetrations are gasketed, the secondary containment will not be affected by water spray.

1.5.6 Free drop

The regulations for normal conditions of transport require that between 1.5 and 2.5 hr after conclusion of the water spray test, the package weighing 10,000 to 20,000 lb be capable of withstanding a free drop through a distance of 3 ft onto a flat and essentially unyielding horizontal surface, striking the surface in a position in which maximum damage is expected to result.

Demonstration of compliance with this requirement by analytical methods is difficult because experimentally verified analytical techniques do not exist, and all of the necessary material property data are not available. Drop tests have not been performed for the cask configuration under consideration. Since the most damaging free-drop orientation for the ORNL loop transport cask is not evident by inspection, several orientations were considered and evaluated. The analyses were intended to characterize cask response conservatively and so demonstrate compliance with the regulations.

The existing ORNL computer programs CEIR,[21] 1001 CASK, and 1005 CASK were used to calculate maximum accelerations and deformations for end, side, and two corner impact orientations. The CEIR program[21] is based on material properties which were determined experimentally. The mechanical properties of cask materials given in Table 1.1 were used for the analysis made with the CEIR program. The 1001 CASK and 1005 CASK programs are based on ideal materials, that is, materials which have a constant stress value for all strains. In the analyses made with these programs, a solution was made for the ideal yield stresses for lead of 6000 and 14,000 psi. For a yield stress of 6000 psi, a deformation larger than actual will result. Where the ideal yield stress is 14,000 psi, the calculated acceleration will be larger than actual. For mild steel, values of 100,000 and 240,000 psi will be used as limits.

The adequacy of the CEIR and 1001 CASK computer programs was verified by comparing the results of drop tests[22] made on a 6000-lb cask with the responses calculated by using the programs. Program listings and derivations of pertinent equations are presented in Appendix C, and the results obtained by using these programs are given in Table 1.3. Calculated time histories of deformation as a function of acceleration are illustrated in Figs. 1.17 through 1.23.

As indicated in Table 1.3, the maximum deformation and acceleration were computed for the 3-ft free drop and impact of the ORNL loop transport cask on its end, side, and corner. Two different angles were considered for the corner impact orientation, since it was recognized that the maximum energy would be dissipated in plastic deformation when the cask

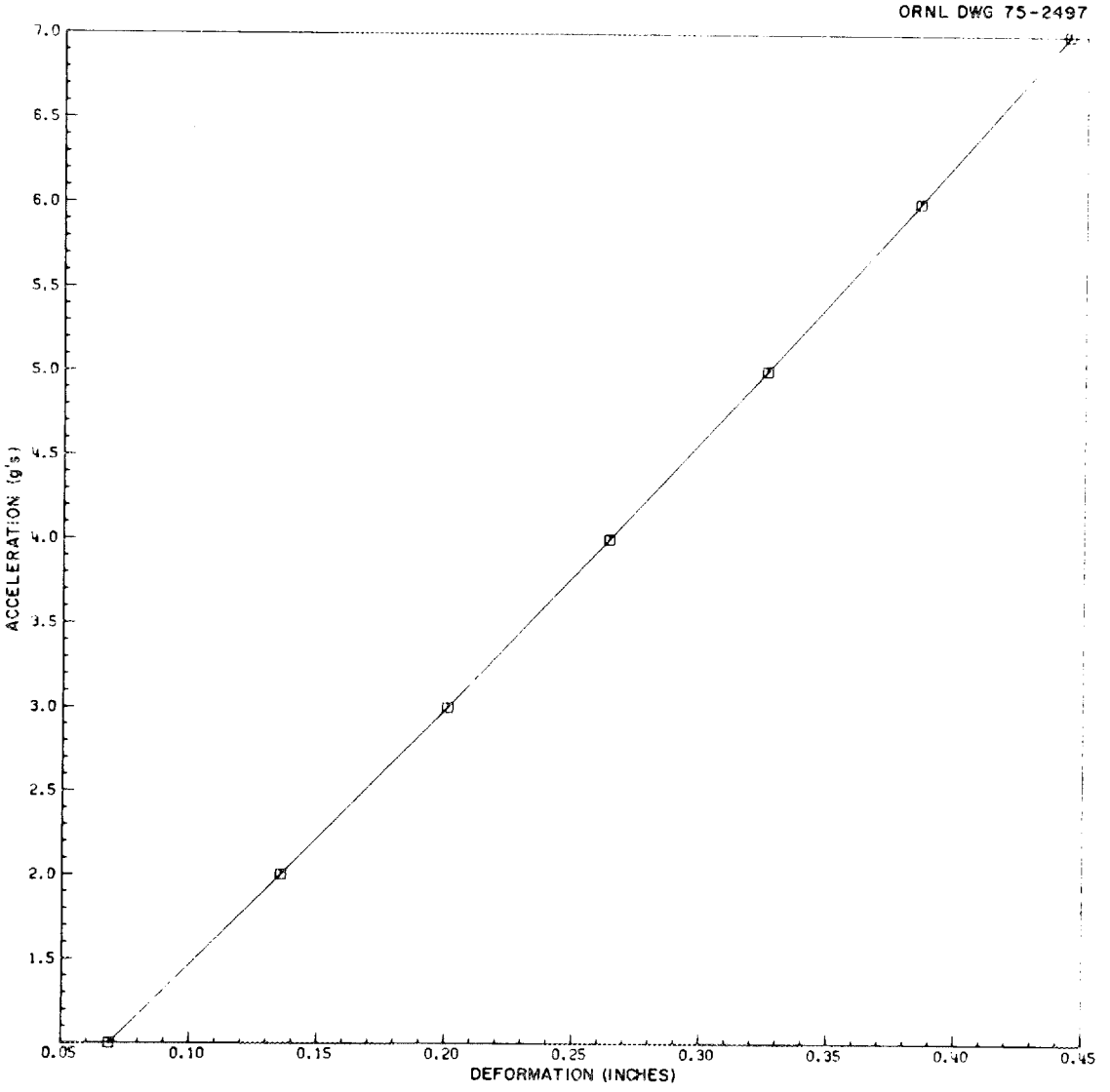

Fig. 1.17. Acceleration vs deformation computed for 3-ft free drop and end impact of ORNL loop transport cask.

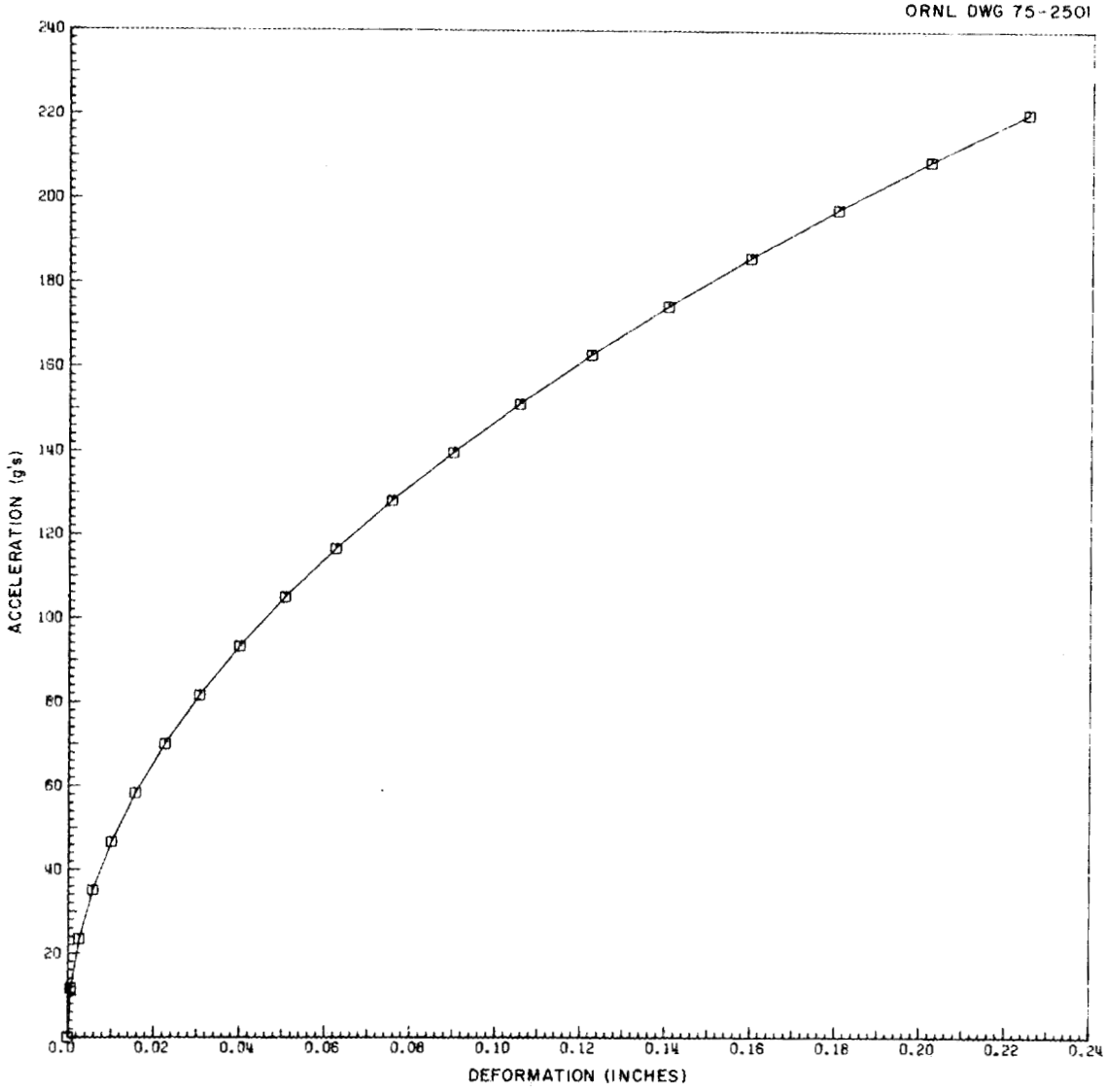

Fig. 1.18. Acceleration vs deformation computed for 3-ft free drop and side impact of ORNL loop transport cask with a dynamic yield stress of 6000 psi.

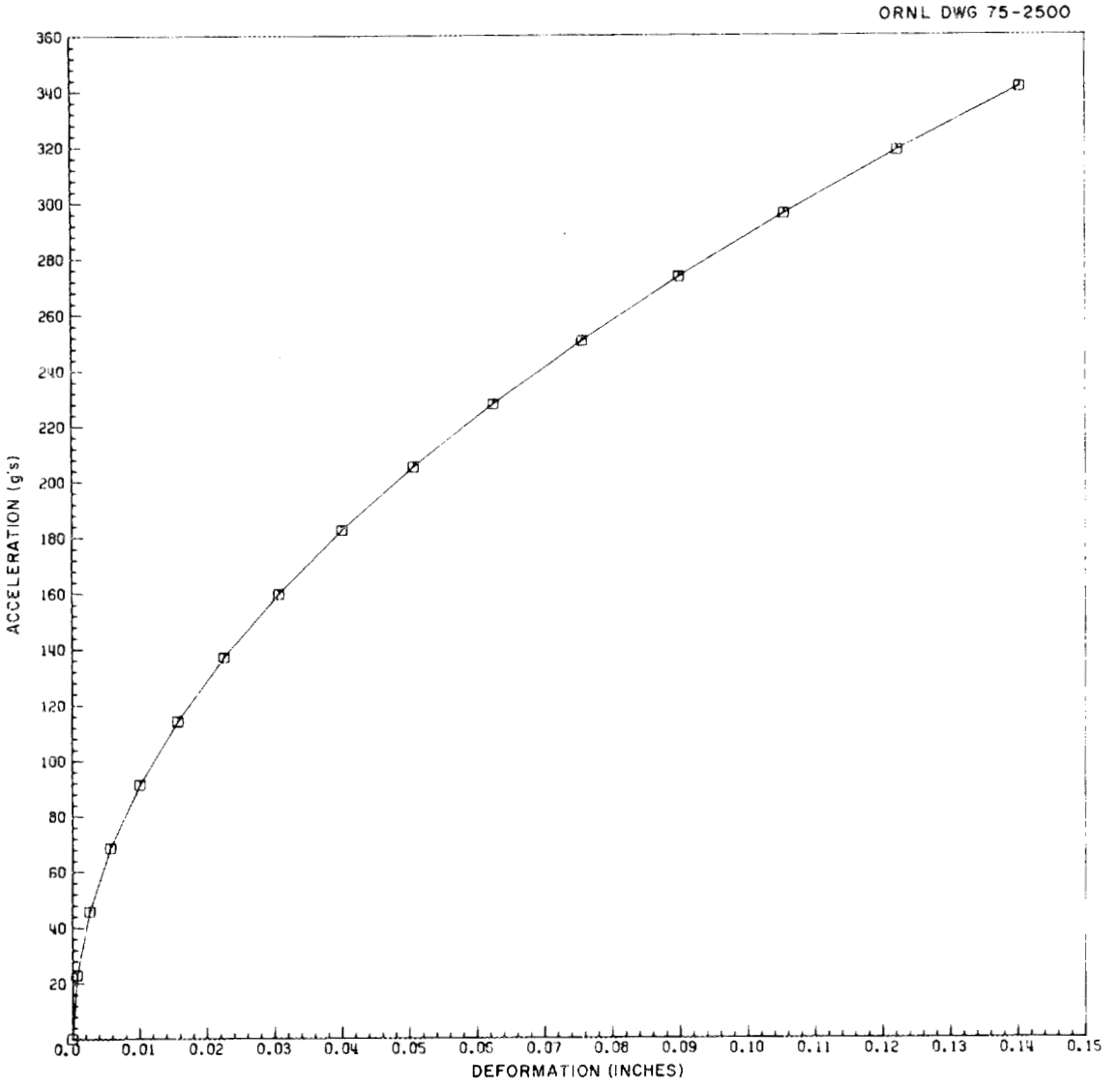

Fig. 1.19. Acceleration vs deformation computed for 3-ft free drop and side impact of ORNL loop transport cask with a dynamic yield stress of 14,000 psi.

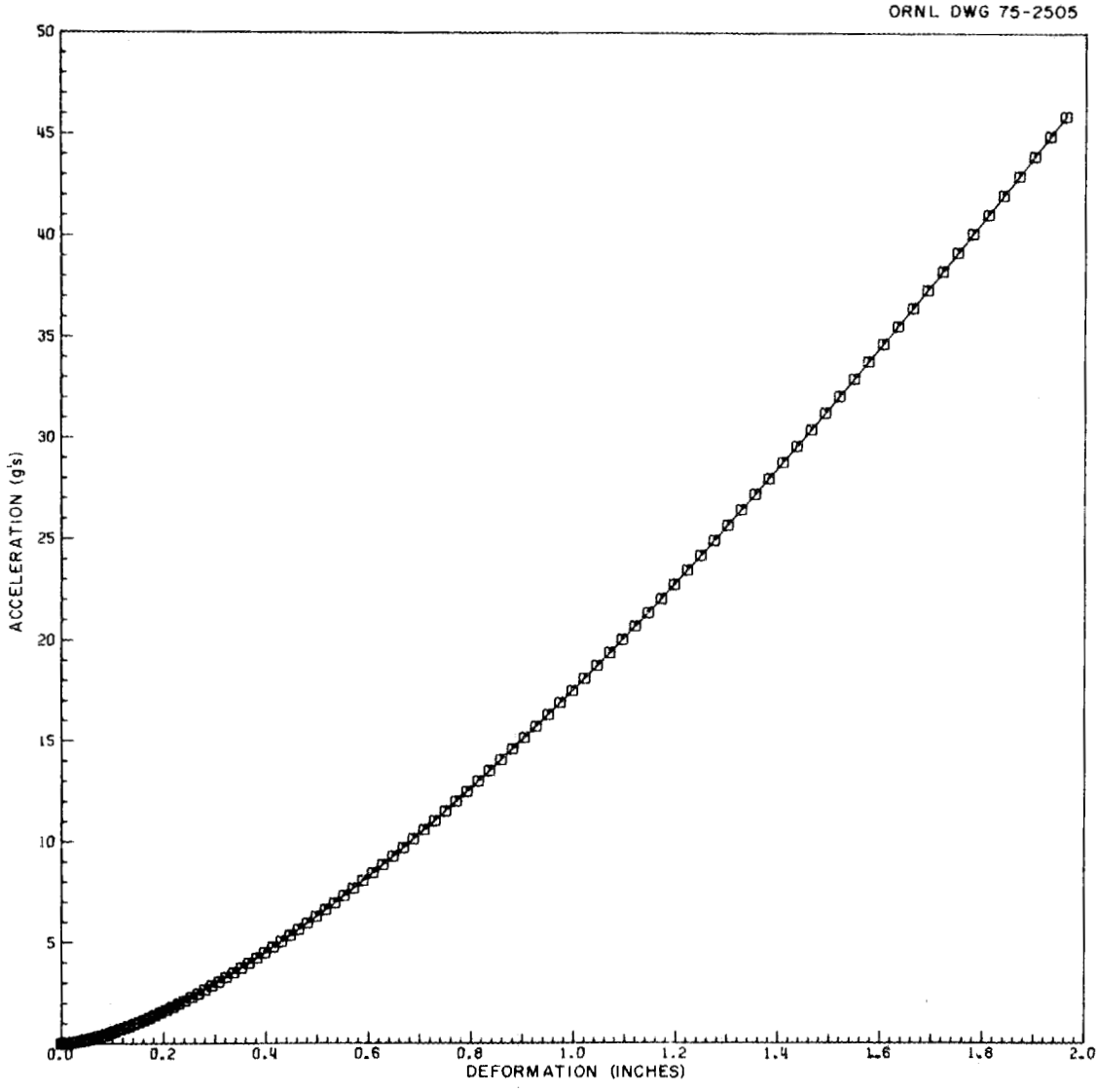

Fig. 1.20. Acceleration vs deformation computed for 3-ft free drop and corner impact of ORNL loop transport cask at an angle of 15° with a dynamic yield stress of 6000 psi.

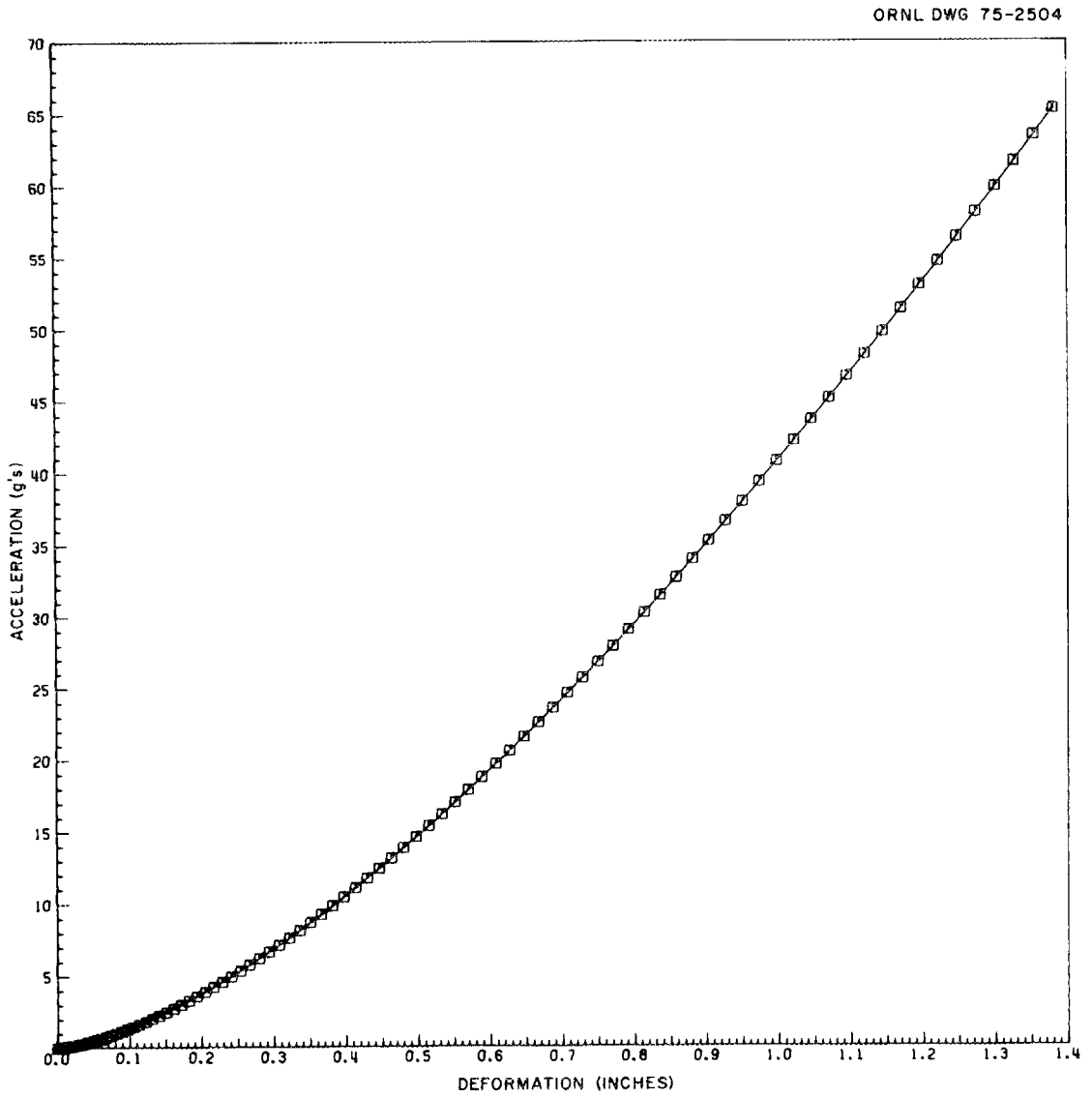

Fig. 1.21. Acceleration vs deformation computed for 3-ft free drop and corner impact of ORNL loop transport cask at an angle of 15° with a dynamic yield stress of 14,000 psi.

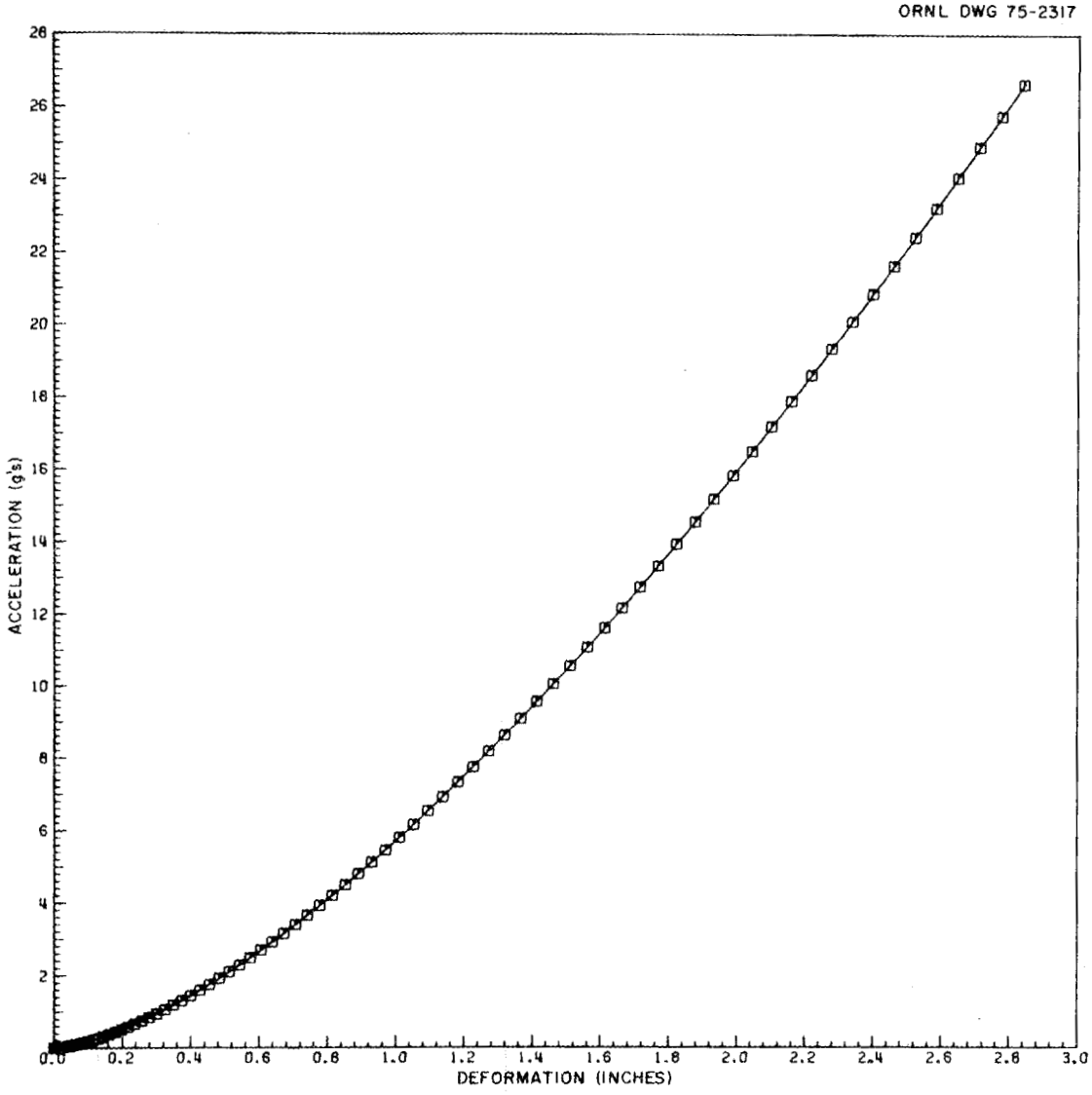

Fig. 1.22. Acceleration vs deformation computed for 3-ft free drop and corner impact of ORNL loop transport cask at an angle of 45° with a dynamic yield stress of 6000 psi.

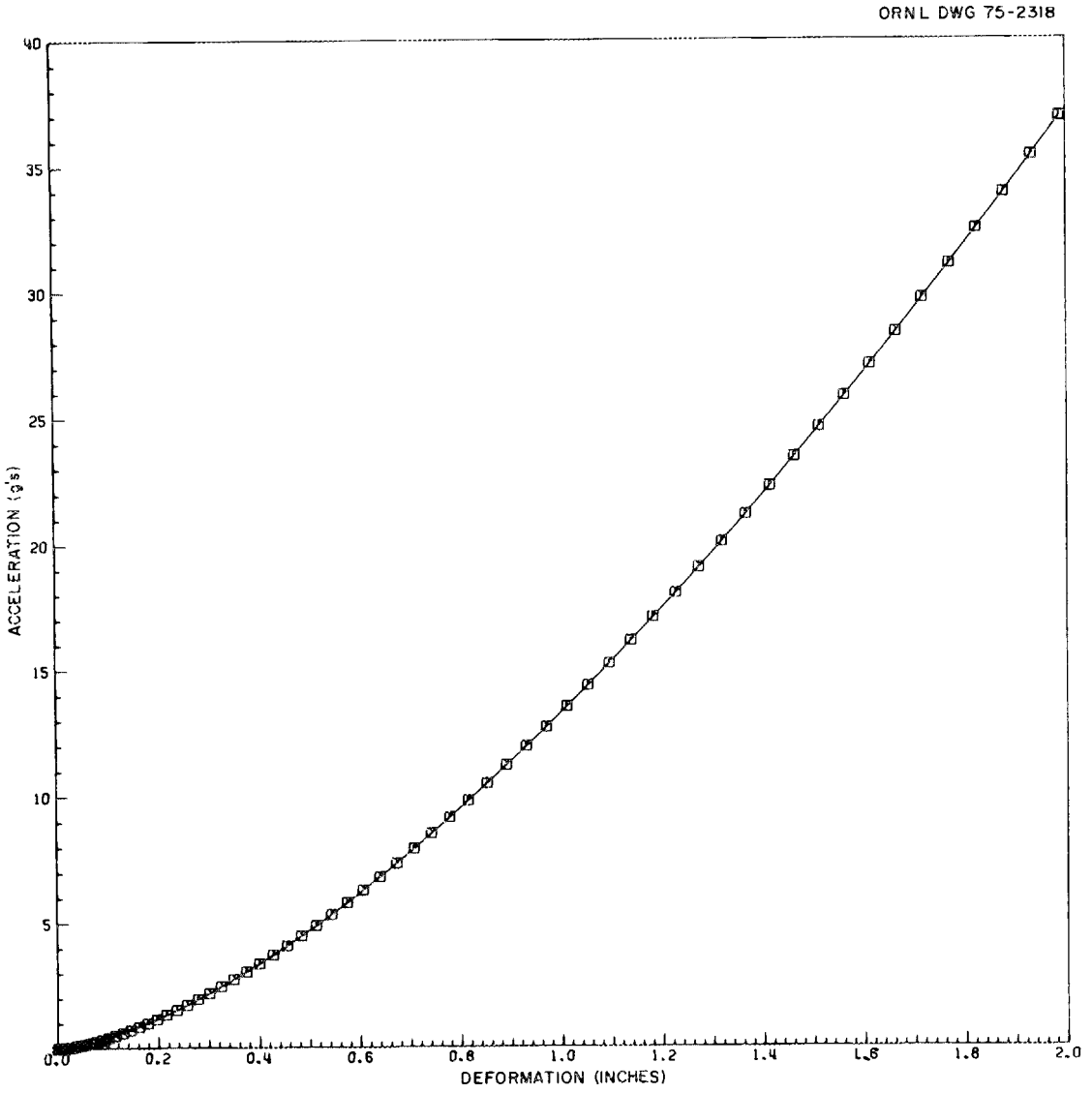

Fig. 1.23. Acceleration vs deformation computed for 3-ft free drop and corner impact of ORNL loop transport cask at an angle of 45° with a dynamic yield stress of 14,000 psi.

Table 1.3. Maximum deformation and maximum acceleration computed for the ORNL loop transport cask as a result of the 3-ft free drop and impact in four orientations

Impact orientation	Computer program	Maximum deformation (in.)	Maximum acceleration (g's)
End	CEIR	0.443	7
Side	1005 CASK	0.2249	341
Corner, $\theta = 15°$	1001 CASK (modified)	1.96	65
Corner, $\theta = 45°$	1001 CASK (modified)	2.84	37

center of gravity was directly above the impact point, that is, when the impact angle θ is approximately equal to 15°, as illustrated in Fig. 1.24. When θ is greater than 15°, the cask retains a portion of its energy as kinetic energy which will be dissipated on a secondary side impact. The 1001 CASK computer program was modified to calculate the energy which would be absorbed in the initial impact only. Analyses were made for impact angles of 40, 45, and 50°, and the typical results were as given for the case where $\theta = 45°$.

To determine the orientation in which the maximum shielding loss would occur, the thickness of the lead from the surface of the deformed corner to point A in Fig. 1.24(a) was calculated for the corner impact orientation in which $\theta = 45°$. For this case, the shielding thickness

$$t_s = [(12.0 - 0.687 - 3.0)^2 + (9.4)^2]^{1/2} - 2.84 \qquad (1.72)$$

$$= 9.71 \text{ in.}$$

The normal radial thickness of the lead in the cask is 8.3125 in. Since the thickness of the lead after a corner impact of the cask is greater than the normal radial thickness, the maximum loss of shielding would occur when the impact angle θ approached 90°, or when the cask impacted on its side.

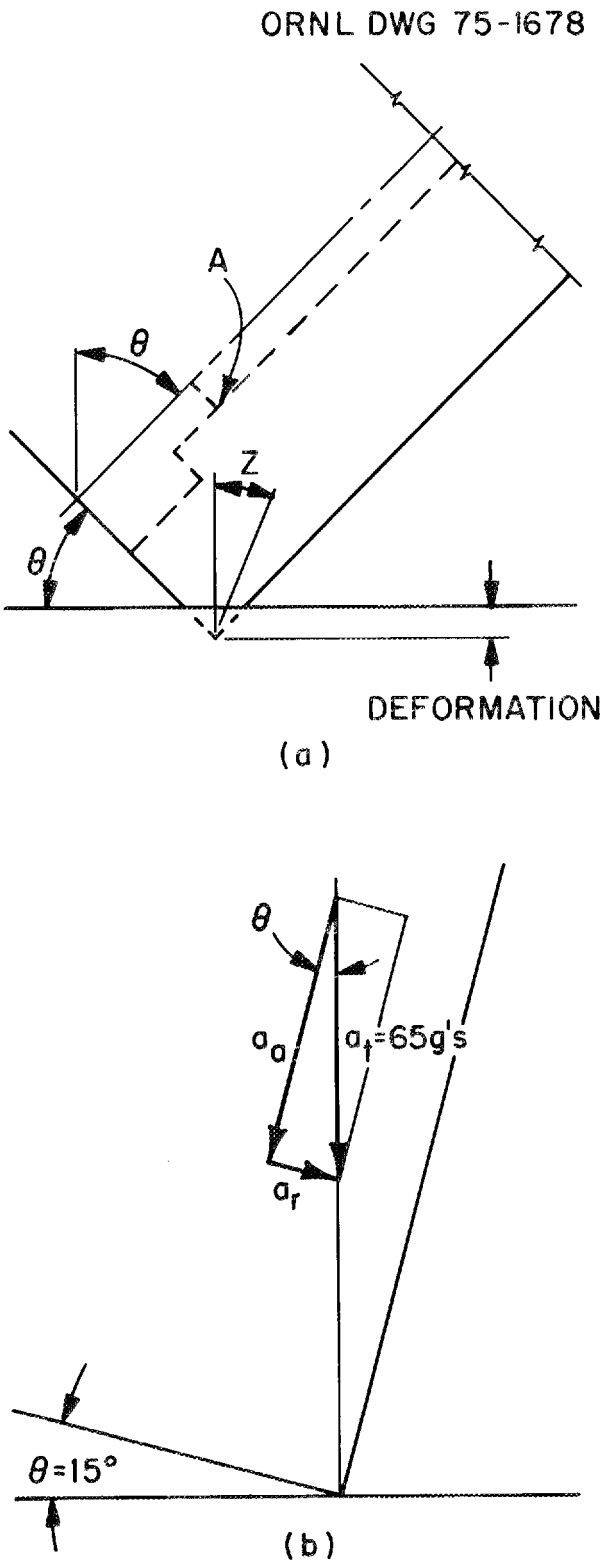

Fig. 1.24. ORNL loop transport cask corner impact orientation.

The maximum acceleration occurs in the side impact orientation. The door plug has a very large effective shear area, and no shear stresses of any magnitude are anticipated. The corner drop orientation at $\theta = 15°$ would impose substantial forces on the end access plug bolts. In this impact orientation, there would be axial and radial acceleration. With respect to the notation in Fig. 1.24(b), the axial acceleration

$$a_a = a_t(\cos\theta) \tag{1.73}$$

$$= 65(\cos 15°) = 62.8\text{g's} ,$$

and the radial acceleration

$$a_r = a_t(\sin\theta) \tag{1.74}$$

$$= 65(\sin 15°) = 16.8\text{g's} .$$

When it is assumed that there is no friction between the plug body and the cask liner, the force (F) on the plug retaining bolts is given by the equation

$$F = a_a W/g_c , \tag{1.75}$$

where

W = weight of the plug plus weight of cask contents (lb),

g_c = gravitational constant ($lb_m \cdot ft/lb_f \cdot sec^2$) .

The maximum weight of the intended contents of the ORNL loop transport cask, including the 2R container, will not exceed 150 lb, and the end access plug weighs 177 lb. Therefore, the force on the bolts is

$$F = 62.8(177 + 150) = 20{,}535 \text{ lb} .$$

Since this force is resisted by eight bolts (1/2-13NC), the force on each bolt is $f = F/8 = 2567$ lb. The stress on each bolt is given by the equation

$$\sigma = f/A \ , \tag{1.76}$$

where A = stress area of a 1/2-13NC bolt = 0.1419 in.^{2}. Therefore,

$$\sigma = 2567/0.1419 = 18{,}090 \text{ psi} \ .$$

The yield strength of the plug retaining bolts will not be exceeded as a result of the 3-ft free drop and 15° corner impact of the ORNL loop transport cask.

If the ORNL loop transport cask were to impact on its top (with its long axis in a horizontal attitude), the horizontal cask lifting eyes would contact the impact surface first. These eyes would either behave like heat transfer fins and buckle in an S-curve or double-hinge mode, or they would fail in compression. The peak failure load for heat transfer fins impacted normal to their axes has been determined[23] to be a function of the ratio of fin height to fin thickness. As indicated in Fig. 1.7, the height of the cask lifting eye plate is 6.25 in. and its thickness is 2 in., yielding a plate height-to-thickness ratio of 3.125. It can be seen from Fig. 1.25 that the peak load or load required for buckling failure would be very large for a height-to-thickness ratio of 3.1. It was therefore concluded that the horizontal lifting eye plates would fail in compression.

Prior to and during compression failure of the cask lifting eyes resulting from a 3-ft free drop and top impact of the ORNL loop transport cask, the lifting eye plates would apply load to the outer shell of the cask, and the shell would, in turn, load and deform the shielding locally. The results of puncture tests[24] indicate that when loaded locally, steel-clad lead will deform as illustrated in Fig. 1.26(a). From photographs of actual test specimens (Figs. 6, 7, 10, 11, 12, 14, 38, and 39) published by Spaller,[24] it was concluded that in Fig. 1.26(a),

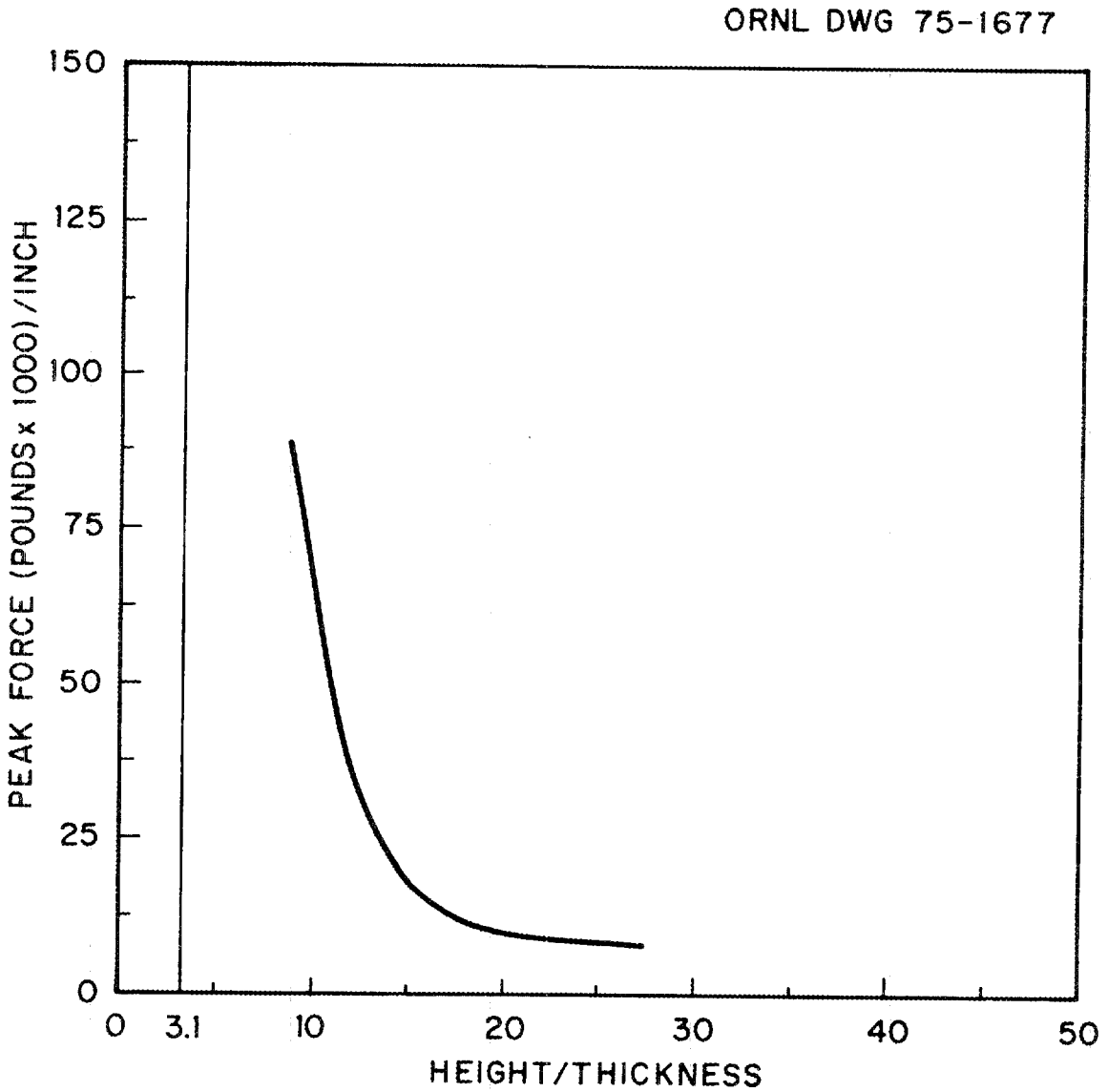

Fig. 1.25. Fin peak force/in. as a function of fin height-to-thickness ratio (from ref. 23).

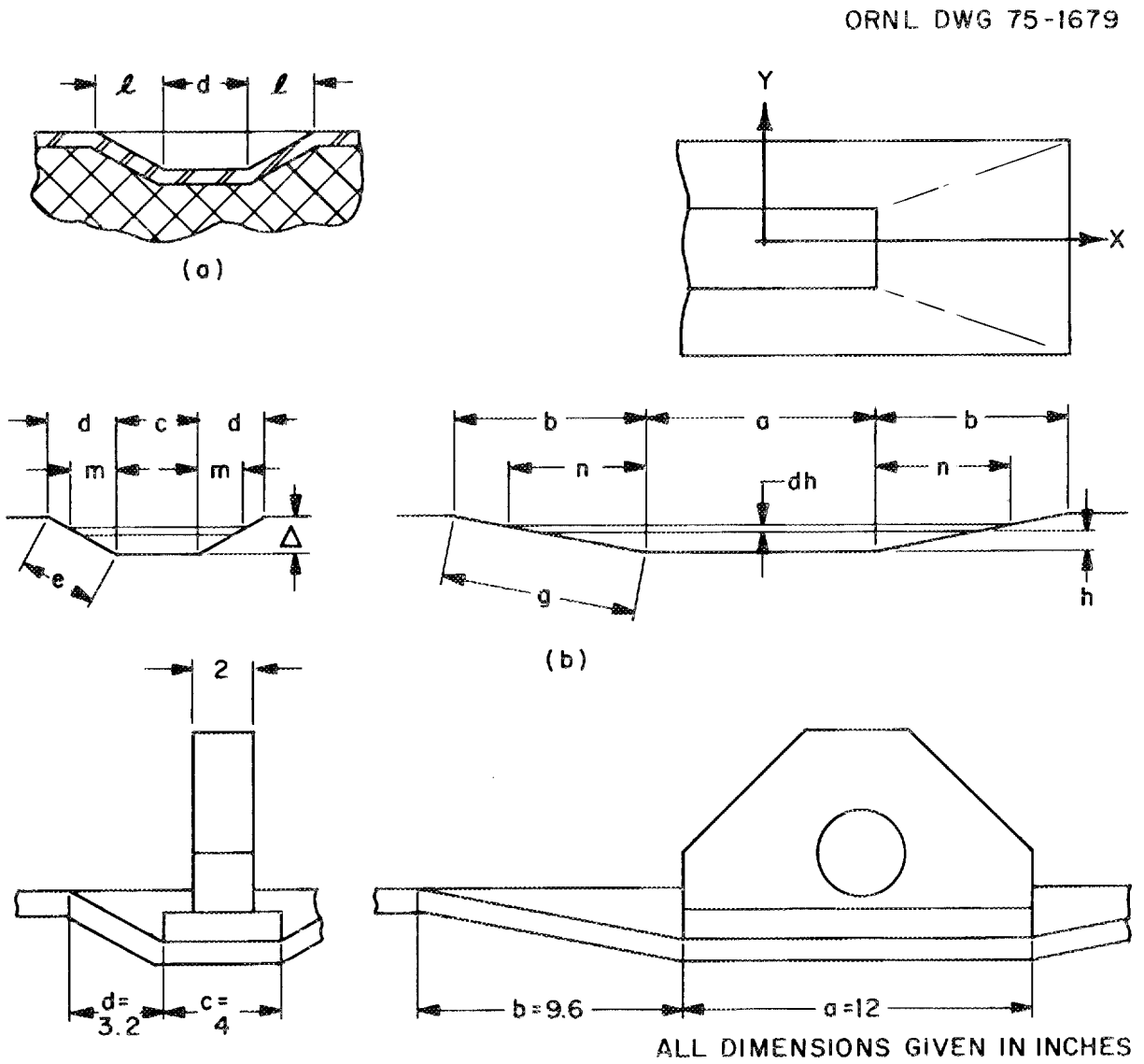

Fig. 1.26. Lead deformation by impact on lifting eyes.

$\ell \cong 0.8d$. If it is assumed that this ratio is valid for loads applied by a rectangular area, the geometry illustrated in Fig. 1.26(b) will be valid for deformation of the steel-clad lead in the ORNL loop transfer cask as a result of the 3-ft free drop and top impact.

With respect to the notation in Fig. 1.26(b), by similar triangles,

$$n = (hb)/\Delta \ , \tag{1.77}$$

$$m = (hd)/\Delta \ . \tag{1.78}$$

The volume of lead (V_L) displaced is given by the equation

$$V_L = \int_{h=0}^{h=\Delta} A \ dH \ , \tag{1.79}$$

where

A = cross-sectional area at h

$= (a + 2n)(c + 2m)$.

When the terms for the cross-sectional area at h are expanded and the values given in Eqs. (1.77) and (1.78) are substituted for n and m, Eq. (1.79) can be written as follows:

$$V_L = \int_{h=0}^{h=\Delta} [ac + (2ahd)/\Delta + (2chb)/\Delta + (4bh^2d)/\Delta^2] \ dh \ . \tag{1.80}$$

Integration and substitution of limits in Eq. (1.80) yields

$$V_L = \Delta[ac + cb + ad + (4bd)/3] \ , \tag{1.81}$$

and numerical substitution in Eq. (1.81) yields

$$V_L = 3.453\Delta ac \ . \tag{1.82}$$

If it is assumed that lead is an ideally plastic material, it is conservative to assume that the energy required to produce deformation of the lead (U_L) is given by the relationship

$$U_L = S_L V_L \ , \tag{1.83}$$

where S_L = the specific energy of the lead.

The steel of the outer shell of the cask would also be stretched, and energy would be dissipated. When the effect of curvature is neglected, the elongation of the steel in the y direction (δ_y) is given by the following equation, in which the notation is as illustrated in Fig. 1.26(b):

$$\begin{aligned} \delta_y &= (c + 2e) - (c + 2d) \qquad (1.84) \\ &= 2(e - d) \\ &= 2[(d^2 + \Delta^2)^{1/2} - d] \ . \end{aligned}$$

Similarly, the elongation of the outer shell steel in the x direction is given by the equation

$$\delta_x = 2[(b^2 + \Delta^2)^{1/2} - b] \ . \tag{1.85}$$

The energy dissipated by the steel shell (U_S) is given by the following equation:

$$U_S = \int_0^{\delta_y} F_y \, d\delta_y + \int_0^{\delta_x} F_x \, d\delta_x \ , \tag{1.86}$$

where F = applied force. Therefore,

$$U_S = \int_0^{\delta_y} \sigma_y A_y \, d\delta_y + \int_0^{\delta_x} \sigma_x A_x \, d\delta_x \ , \tag{1.87}$$

where

σ = stress (psi),

A = average cross-sectional area (in.^{2}).

Stress is a function of strain and can be approximated for structural materials as a straight-line function:[11]

$$\sigma = f(\varepsilon) = C_1 + C_2\varepsilon \ , \tag{1.88}$$

where

ε = average strain (in./in.),

C_1, C_2 = experimentally derived constants.

Since the average strain (ε) is equal to the elongation (δ) of the steel in inches divided by the horizontal length of that elongation, the average strain in the y direction of the cask outer shell, with reference to the notation in Fig. 1.26(b), is given by the equation

$$\varepsilon_y = \delta_y/2d \ , \tag{1.89}$$

and the average strain in the x direction is

$$\varepsilon_x = \delta_x/2b \ . \tag{1.90}$$

Substitution of Eqs. (1.88), (1.89), and (1.90) into Eq. (1.87) yields the following expression for the energy dissipated by the steel outer shell of the cask:

$$U_S = \int_0^{\delta_y} [C_1 + C_2(\delta_y/2d)]Ay \ d\delta_y + \int_0^{\delta_x} [C_1 + C_2(\delta_x/2b)]A_x \ d\delta_x \ . \tag{1.91}$$

Integration of Eq. (1.91) and substitution of limits yields

$$U_S = C_1A_y\delta_y + C_2A_y(\delta_y^2/4d) + C_1A_x\delta_x + C_2A_x(\delta_x^2/4b) \ . \tag{1.92}$$

Since in this case (Fig. 1.25) d = 0.8c and b = 0.8a,

$$U_S = C_1 A_y \delta_y + C_2 A_y (\delta_y^2/3.2c) + C_1 A_s \delta_x + C_2 A_x (\delta_x^2/3.2a) \ . \qquad (1.93)$$

These derived equations have been compiled and coded into a FORTRAN program, 1018 CASK, which is presented in Appendix C. Another program, 1014 CASK, was developed to calculate the response of energy absorbers to impact. The ORNL loop transport cask horizontal lifting eyes were conservatively modeled as shown in Sect. 1.6.1.3 [Fig. 1.46(a)] for the accident condition. The model is conservative, since it is more rigid than the actual lifting eye. The lug base length was input as 12 in., and the base area contribution of the gussets on each side of the lifting eye was disregarded. This will result in more energy being dissipated in bending the shell and displacing the lead. It follows that both the calculated loss of shielding and the calculated acceleration will be greater than what would actually be experienced.

The results of the computer programs can be interfaced by correlation of the energy response as a function of acceleration to obtain the complete response of the cask to impact on the horizontal lifting eyes. The energy-vs-acceleration curve for the lifting eyes, the localized bending and lead displacement for dynamic yield stress values of 6000 and 14,000 psi, and the complete response of the cask to impact on the lifting eyes for both dynamic yield stress values are illustrated in Fig. 1.27. The deformation-vs-energy curves for the cask lifting eyes and the cask body are shown in Figs. 1.28, 1.29, and 1.30, and these data are summarized in Table 1.4.

1.5.7 Penetration

The regulations for normal conditions of transport stipulate that the package be capable of withstanding the impact of the flat end of a vertical steel cylinder which weighs 13 lb, has a diameter of 1-1/4 in., and is dropped from a height of 4 ft normally onto the exposed surface of the package that is expected to be the most vulnerable to puncture. This condition would result in no more than a very superficial dent in

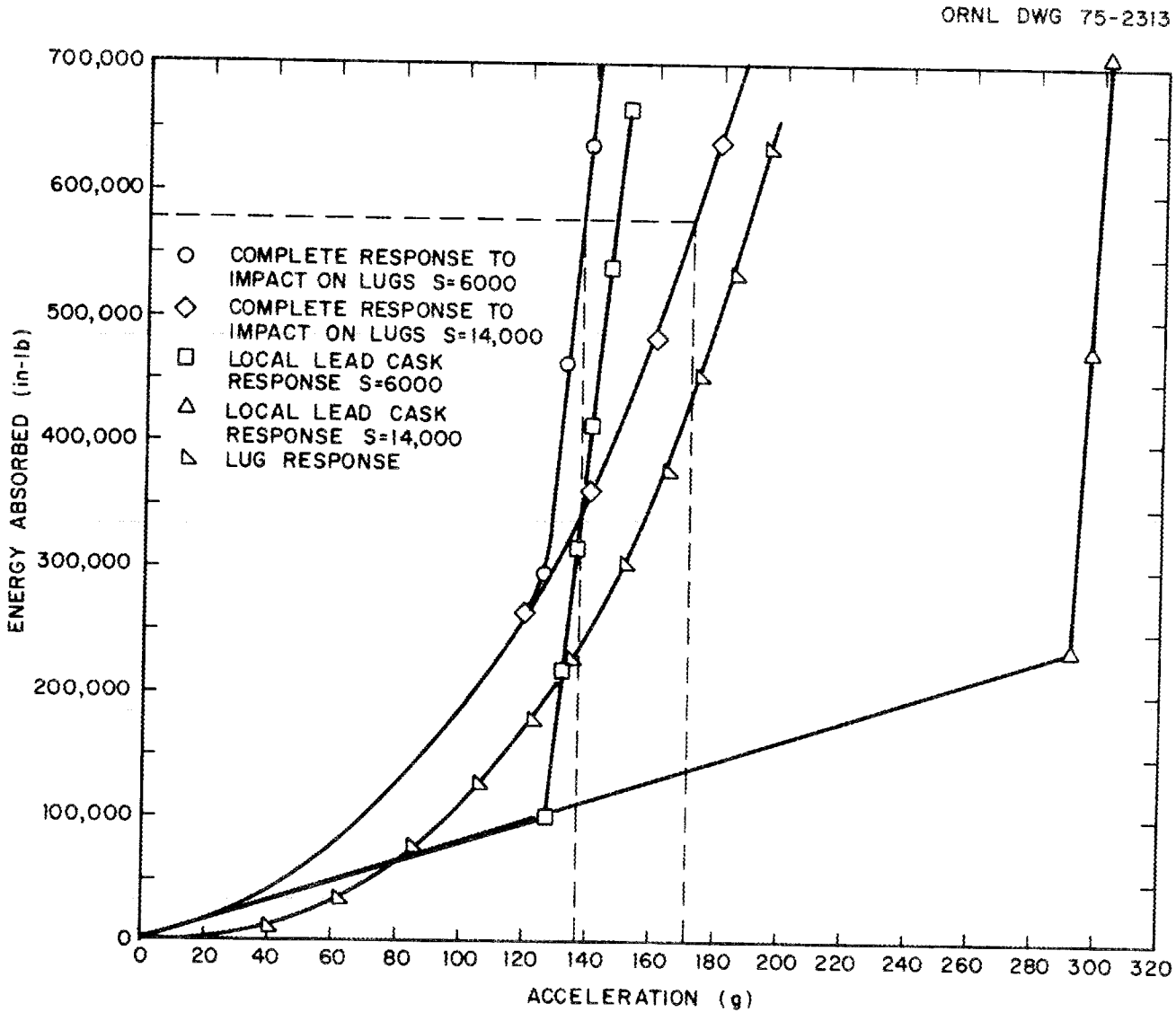

Fig. 1.27. Energy absorbed vs acceleration computed for lifting eyes, cask body, and complete cask resulting from 3-ft free drop and top impact of ORNL loop transport cask.

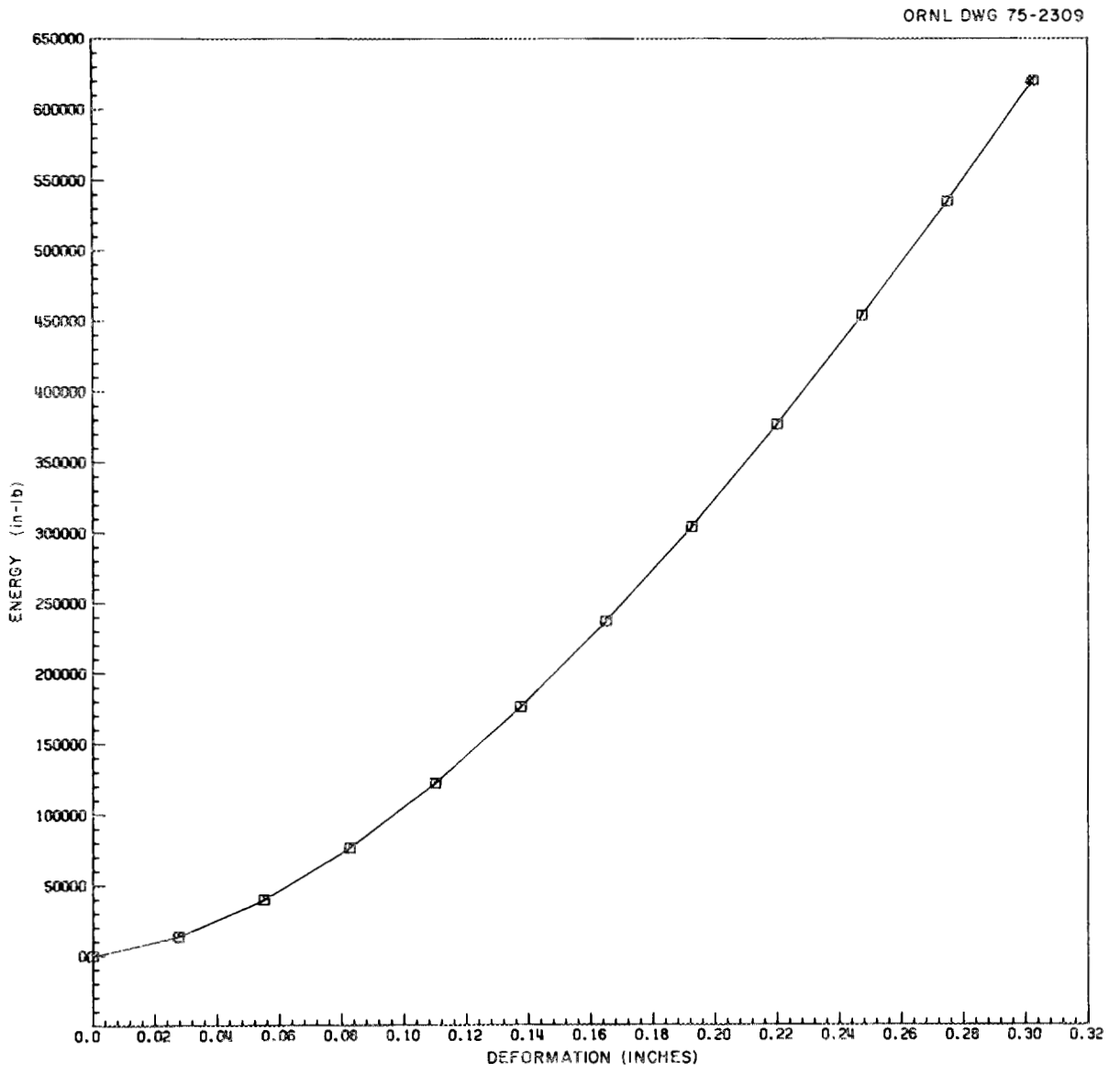

Fig. 1.28. Deformation vs energy absorbed computed for cask lifting eyes as a result of 3-ft free drop and top impact of ORNL loop transport cask.

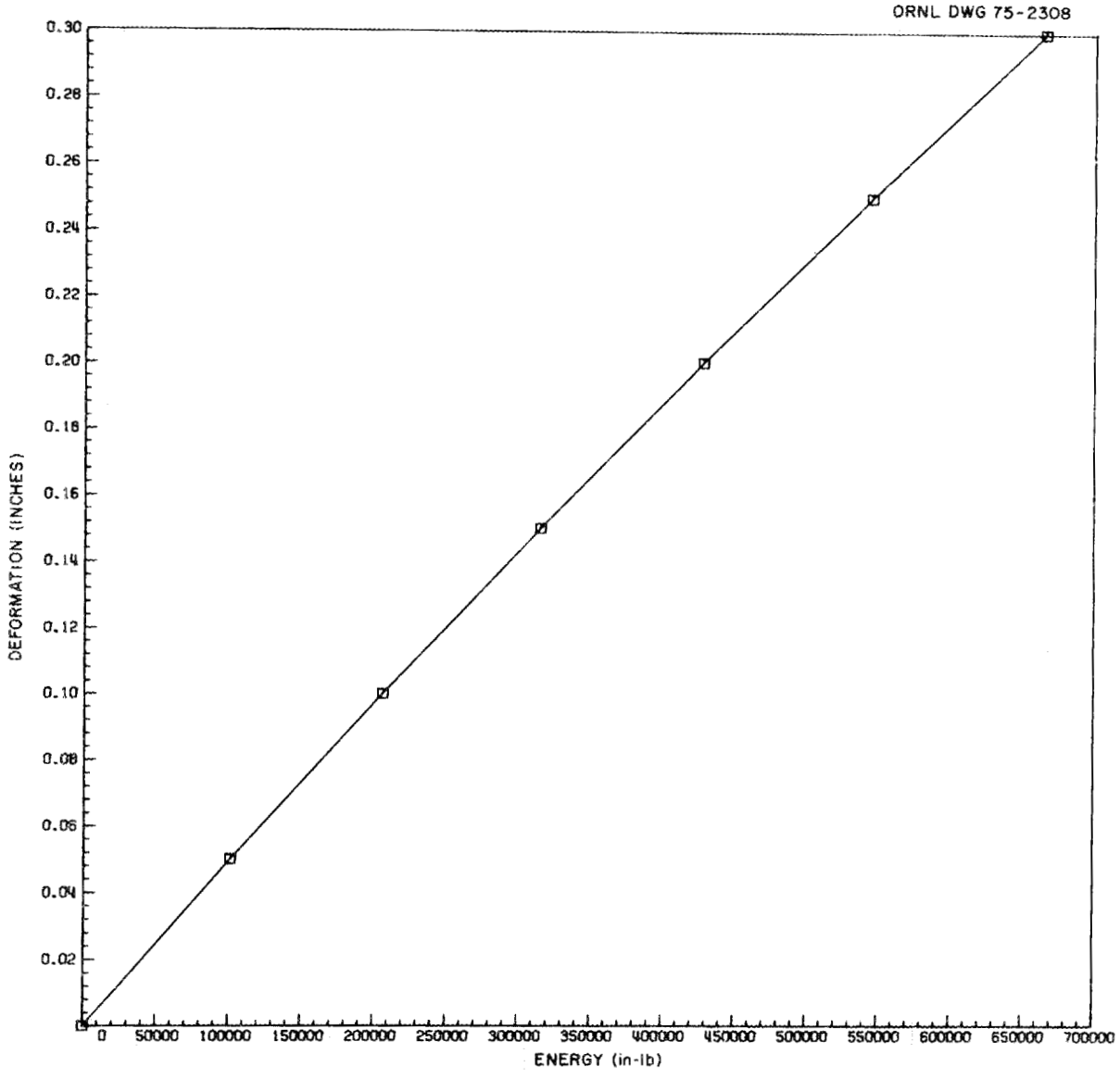

Fig. 1.29. Deformation of cask body vs energy absorbed computed for 3-ft free drop and top impact of ORNL loop transport cask with a dynamic yield stress of 6000 psi.

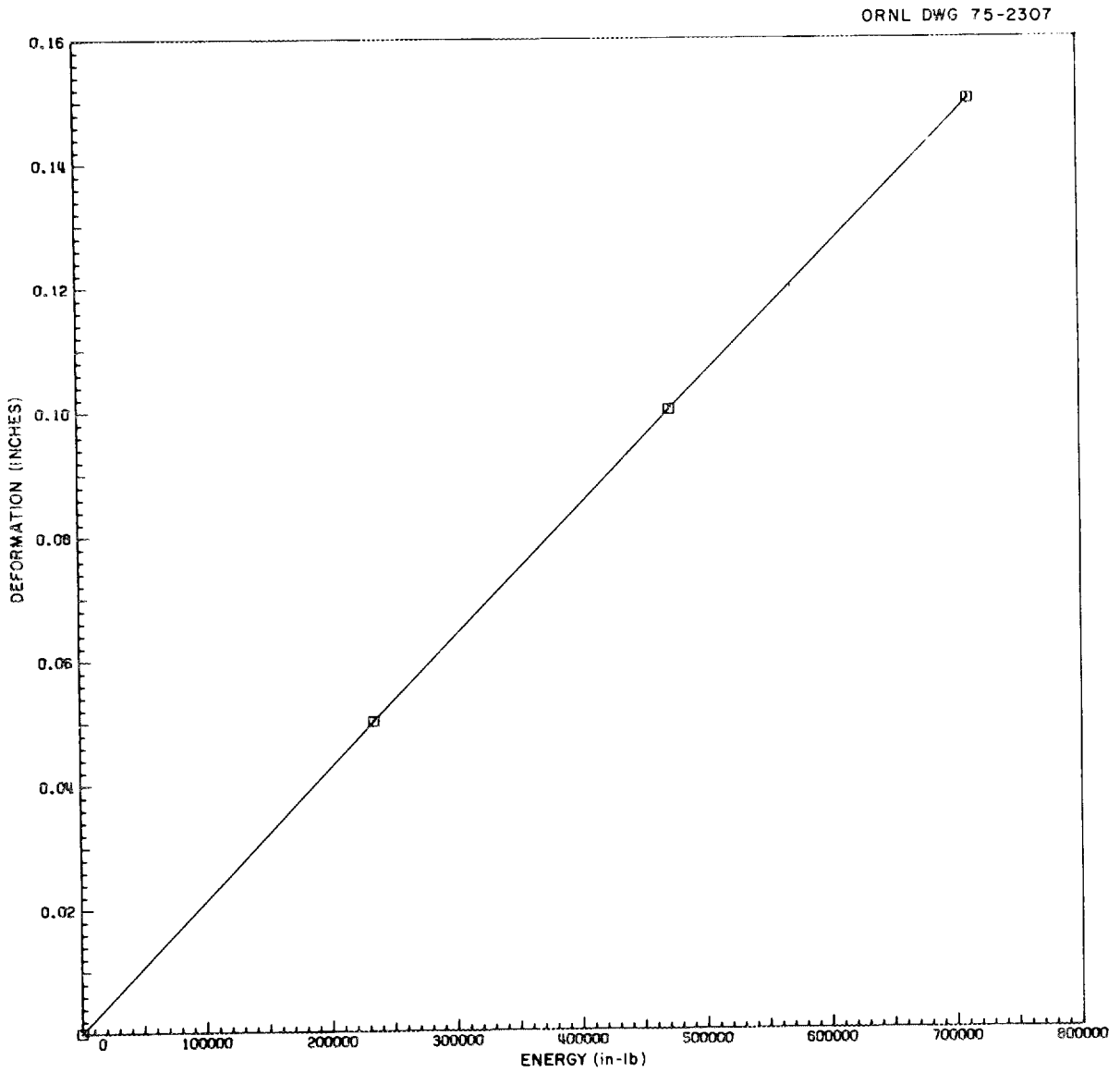

Fig. 1.30. Deformation of cask body vs energy absorbed computed for 3-ft free drop and top impact of ORNL loop transport cask with a dynamic yield stress of 14,000 psi.

Table 1.4. Maximum accelerations, maximum deformations, and energy absorbed in 3-ft drop on lifting eyes

	Dynamic yield stress = 6000 psi	Dynamic yield stress = 14,000 psi
Maximum acceleration, g's	138	171
Deformation of eyes, in.	0.17	0.24
Deformation of cask, in.	0.16	0.03
Energy absorbed by eyes, in.·lb	235,000	440,000
Energy absorbed by cask, in.·lb	340,000	135,000
Total energy, in.·lb	575,000	575,000

the steel surface of the ORNL loop transport cask and would not reduce its effectiveness.

1.5.8 Compression

The regulations for normal conditions of transport require that packages weighing less than 10,000 lb be capable of withstanding a compressive load equal to either five times the weight of the package or 2 psi multiplied by the maximum horizontal cross section of the package, whichever is greater. The load shall be applied, during a period of 24 hr, uniformly against the top and bottom of the package in the position in which the package would normally be transported. Since the ORNL loop tTransport cask weighs 16,000 lb, it is exempt from the compression requirement.

1.6 Standards for Hypothetical Accident Conditions

The standards for the hypothetical accident conditions stipulate that a package used for the shipment of fissile or large quantities of radioactive material shall be so designed and constructed and its contents so limited that if it is subjected to the specified free drop, puncture, thermal, and water immersion conditions, the reduction in

shielding would not be sufficient to increase the external radiation dose rate to more than 1000 millirems/hr at a distance of 3 ft from the outside surface of the package, no radioactive material would be released from the package except gases containing total radioactivity not to exceed 0.1% of the total radioactivity of the contents of the package, and the contents would remain subcritical.

1.6.1 Free drop

The first in the sequence of hypothetical accident conditions to which the cask must be subjected is a free drop through a distance of 30 ft onto a flat, essentially unyielding horizontal surface, striking the surface in a position in which the maximum damage is expected to occur.

Demonstration of compliance with the requirement by analytical methods is difficult because experimentally verified analytical techniques do not exist, and all of the necessary material property data are not available. Drop tests have not been performed for the cask configuration under consideration. Since the most damaging free-drop orientation for the ORNL loop transport cask is not evident by inspection, several orientations were considered and evaluated. The analyses were intended to characterize cask response conservatively and so demonstrate compliance with the regulations.

1.6.1.1 End and side impact orientations. Existing ORNL computer programs were used to calculate the maximum acceleration and deformation resulting from the 30-ft free drop and end and side impacts of the ORNL loop transport cask. Computer program listings and derivations of pertinent equations are given in Appendix C, and the computed accelerations and deformations are given in Table 1.5. Calculated time histories of acceleration vs deformation for the end and side impacts are shown in Figs. 1.31, 1.32, and 1.33, and the resulting shielding losses are illustrated in Figs. 1.34 and 1.35. These losses will not affect the cask containment, and they are discussed with respect to permissible dose rates in Sect. 4.

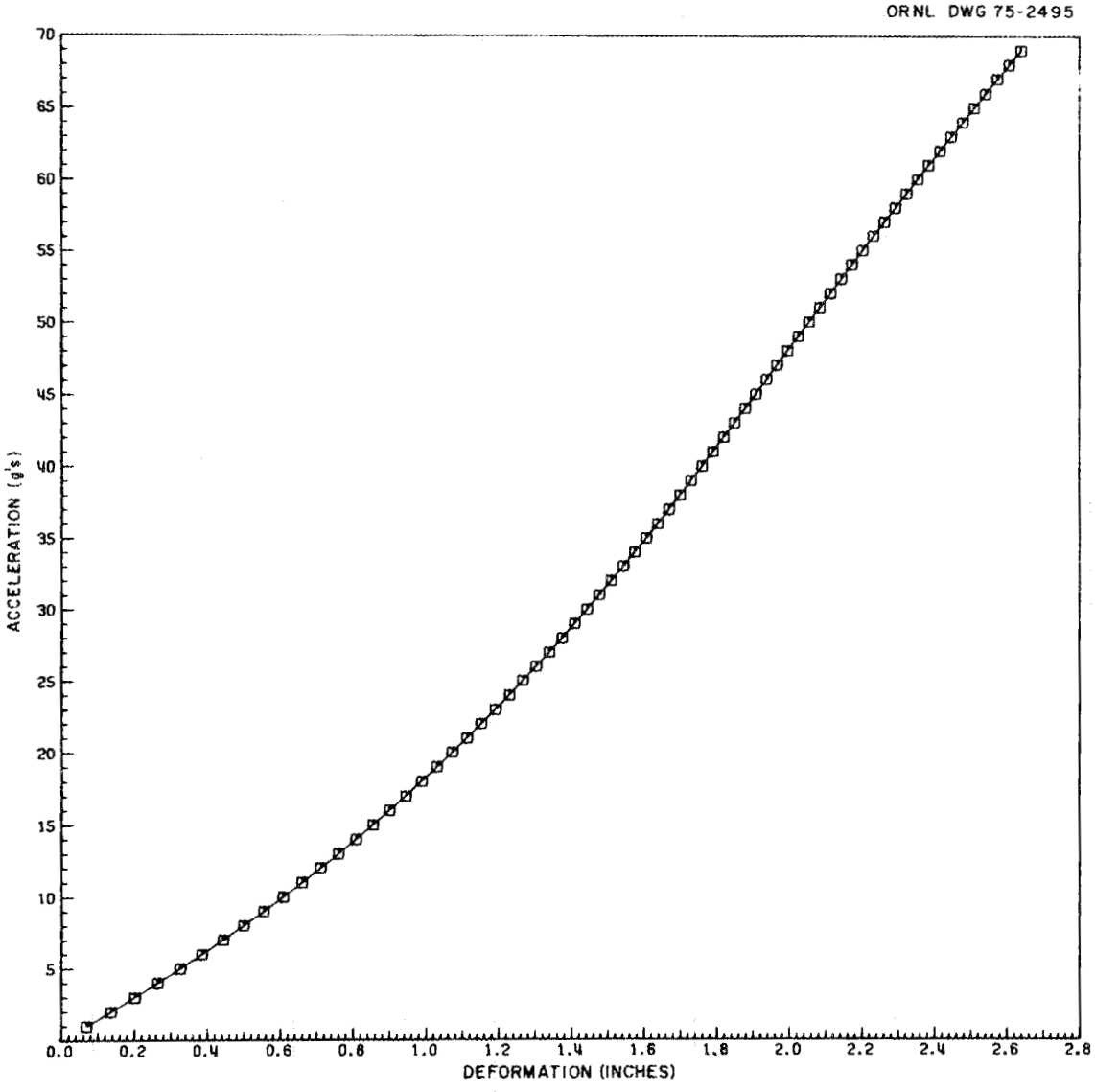

Fig. 1.31. Acceleration vs deformation computed for 30-ft free drop and end impact of ORNL loop transport cask.

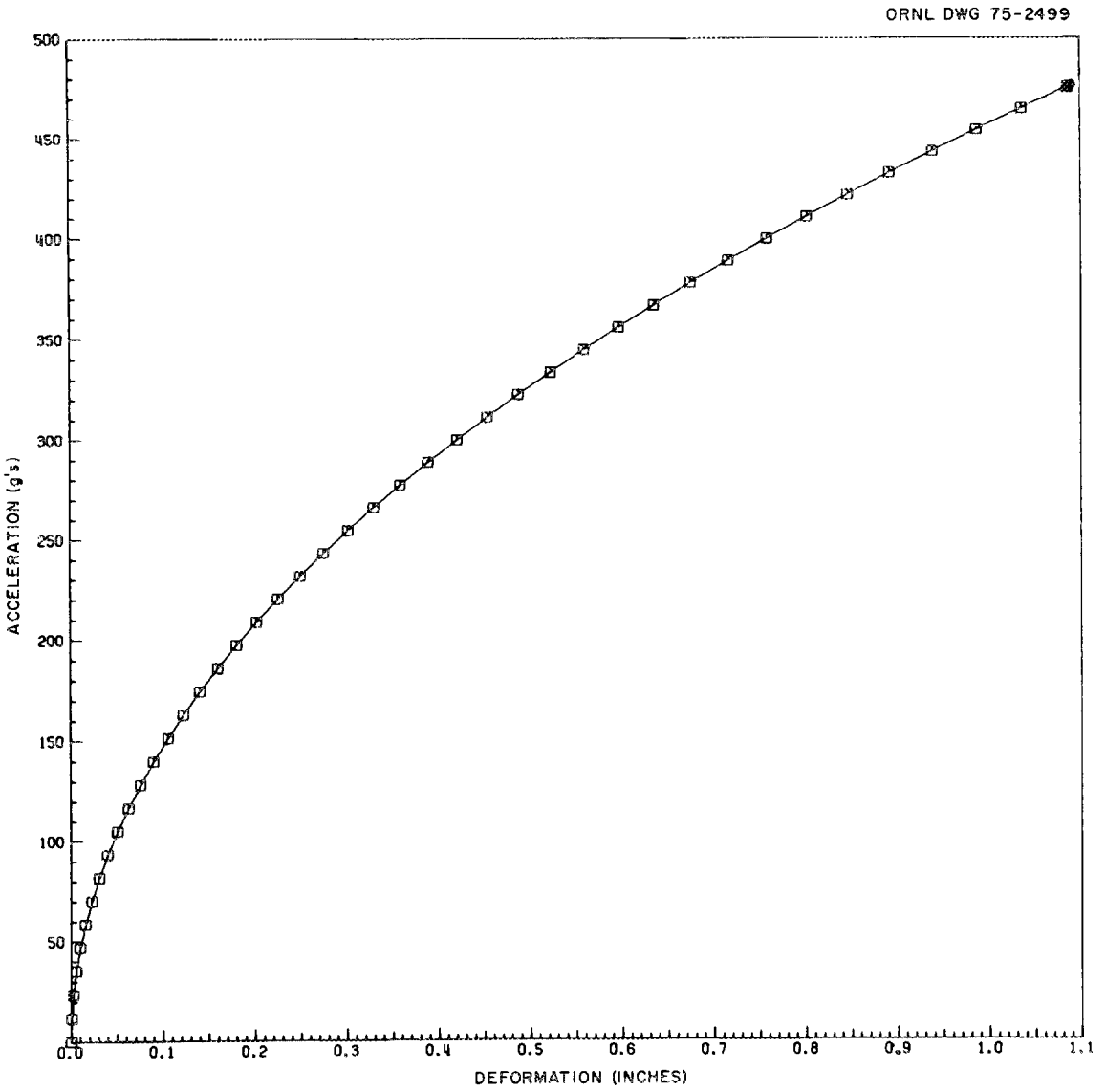

Fig. 1.32. Acceleration vs deformation computed for 30-ft free drop and side impact of ORNL loop transport cask with a dynamic yield stress of 6000 psi.

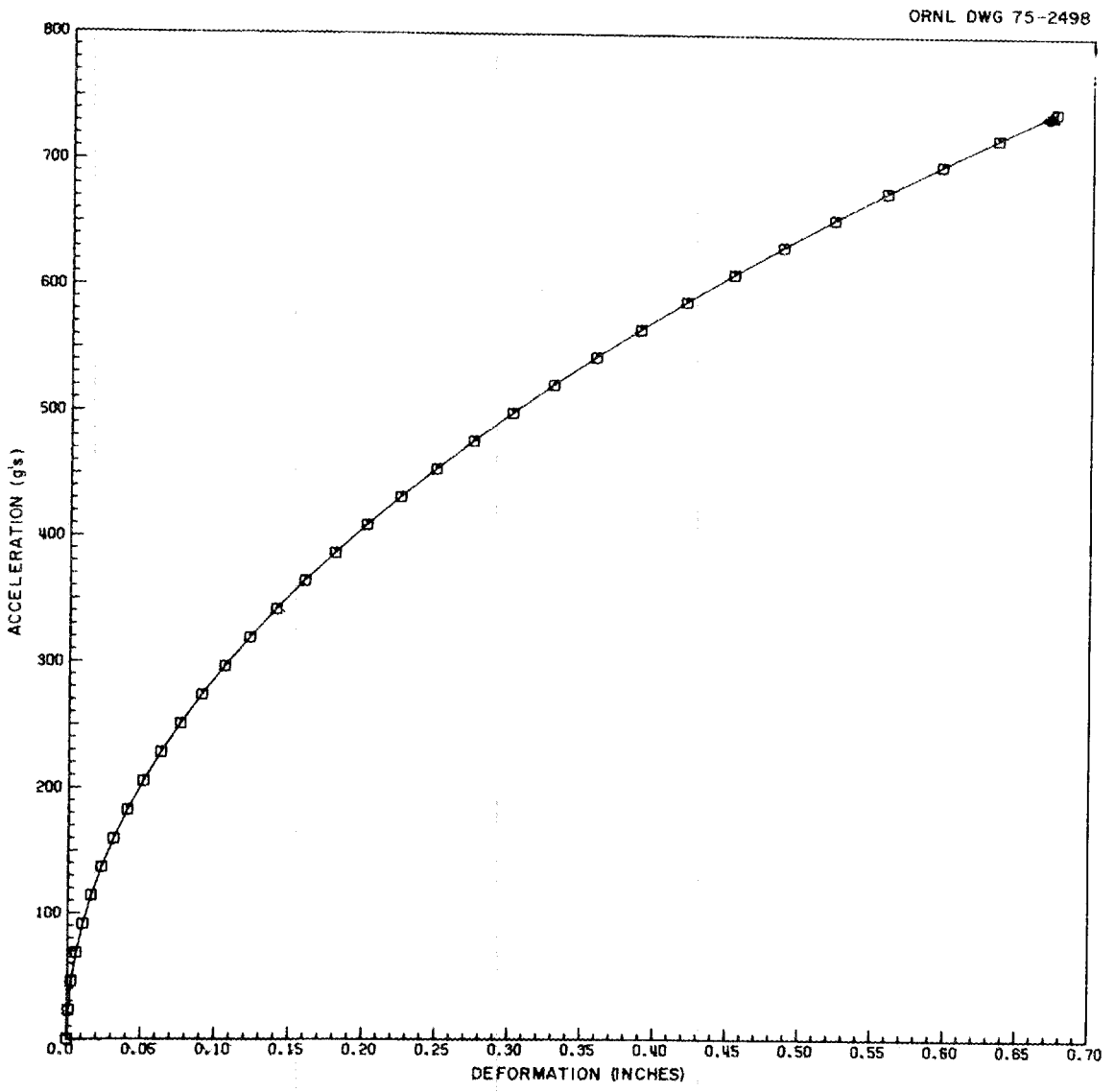

Fig. 1.33. Acceleration vs deformation computed for 30-ft free drop and side impact of ORNL loop transport cask with a dynamic yield stress of 14,000 psi.

ORNL DWG 75-503

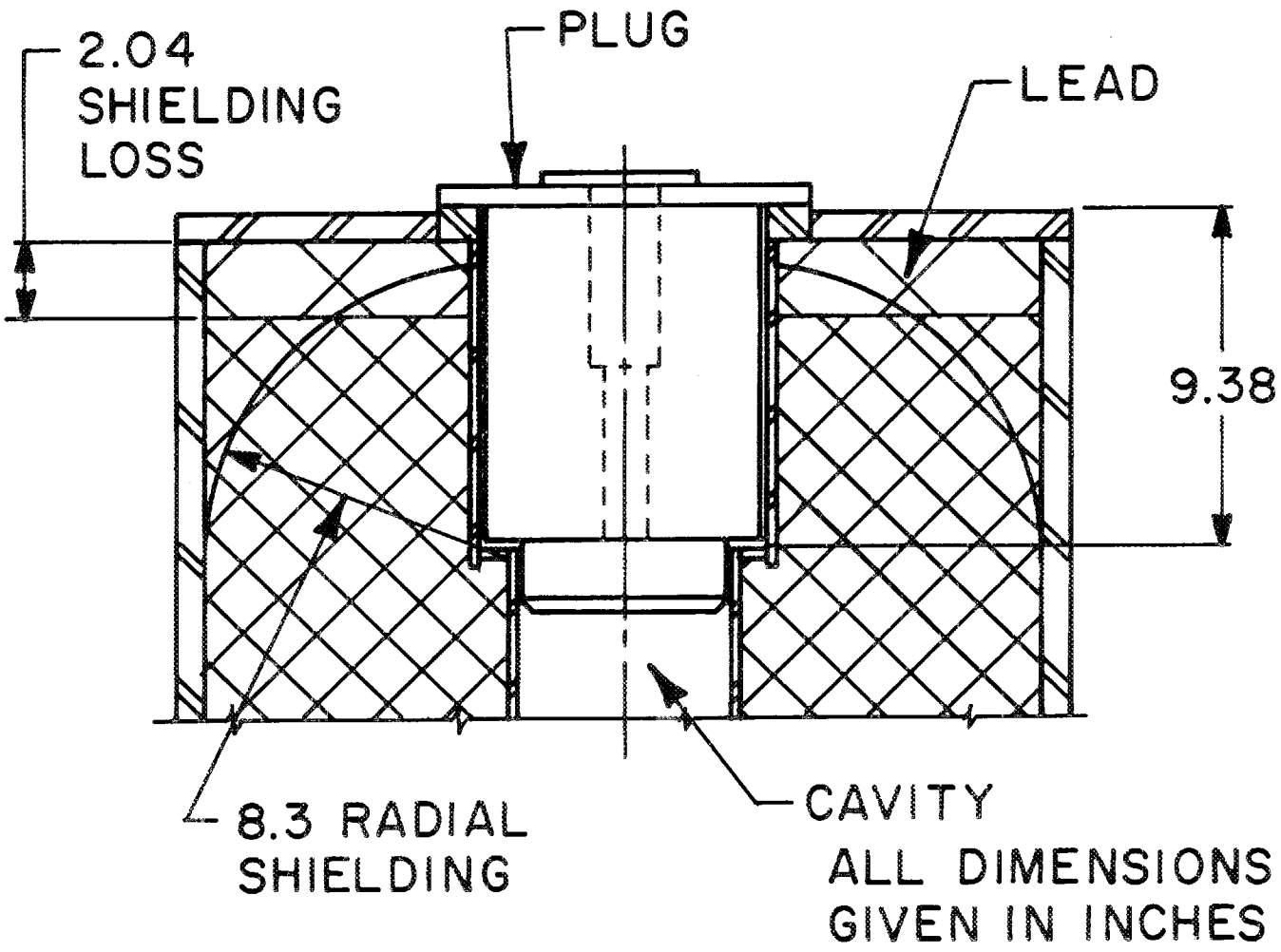

Fig. 1.34. Shielding loss resulting from 30-ft free drop and end impact of ORNL loop transport cask.

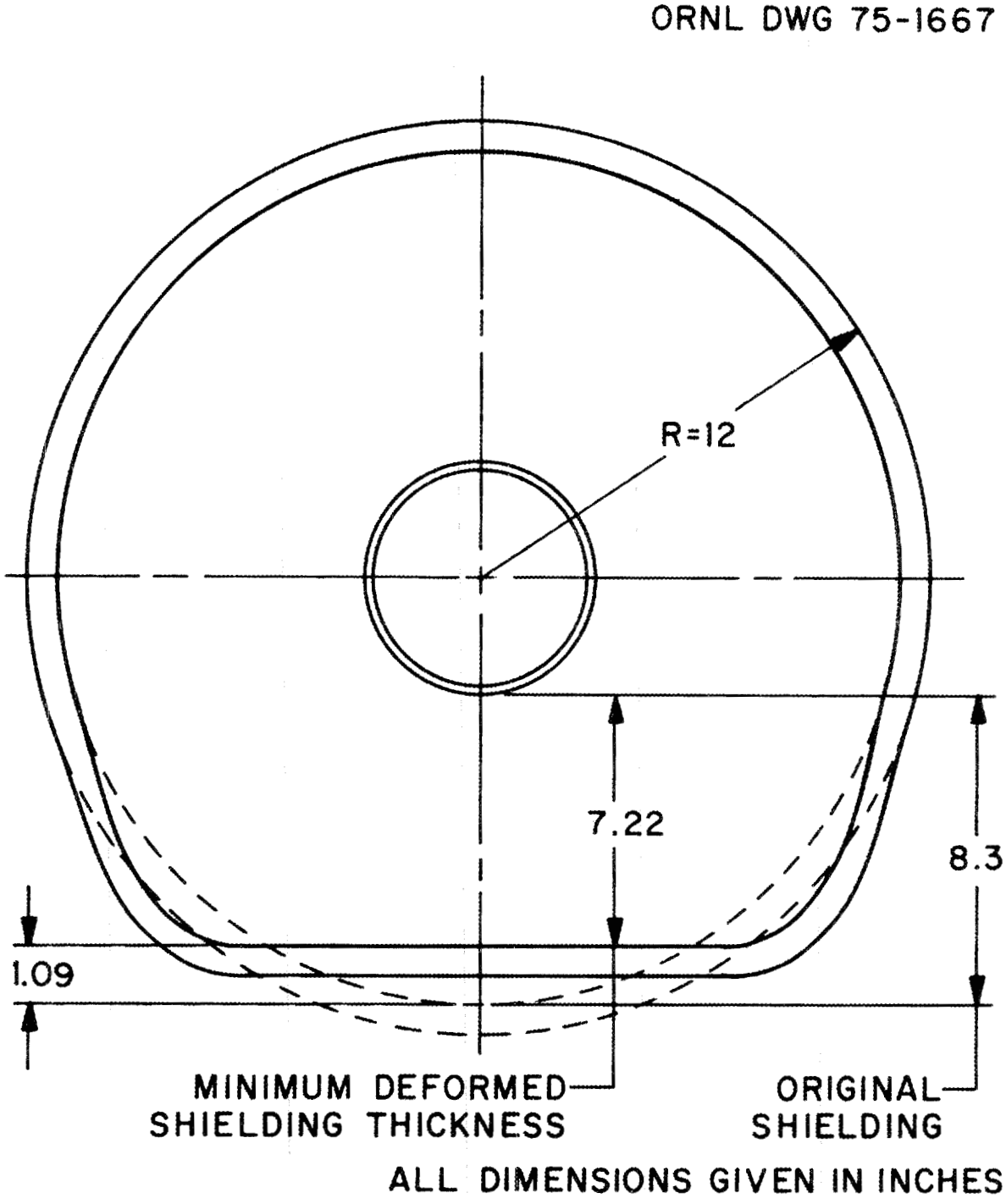

Fig. 1.35. Shielding loss resulting from 30-ft free drop and side impact of ORNL loop transport cask with a dynamic yield stress of 6000 psi.

Table 1.5. Maximum deformation and maximum acceleration computed for the ORNL loop transport cask as a result of the 30-ft free drop and end and side impacts

Impact orientation	Computer program	Maximum deformation (in.)	Maximum acceleration (g's)
End	CEIR	2.64	69
Side	1005 CASK	1.09[a]	740[b]

[a]Deformation for dynamic yield stress of 6000 psi.

[b]Deformation for dynamic yield stress of 14,000 psi.

1.6.1.2 Corner impact orientation. Another existing ORNL computer program was used to analyze the results of the 30-ft free drop and subsequent impact of the ORNL loop transport cask onto a quarter of the edge (corner) of the cylindrical end plate. This orientation was examined for two impact angles, the first of which would maximize the energy absorbed by the cask, and the second would maximize the deformation experienced by the cask. When the impact angle $\theta = 15°$, the impact will occur along the diagonal of the cask, and practically all of the potential energy will be dissipated in the initial impact. When $\theta = 45°$, the deformation is maximized, but a significant portion of the potential energy will be retained as kinetic energy which will be dissipated in a secondary side impact. The maximum deformation and maximum acceleration computed for both corner impact angles are given in Table 1.6, and the computed acceleration-vs-deformation time histories are shown in Figs. 1.36 through 1.39.

On the basis of these computations, the maximum shielding loss will occur in the corner drop orientation at an impact angle of 45° and a dynamic yield stress of 6000 psi. The deformation resulting from the corner drop and impact of the ORNL loop transport cask at angles of 15 and 45° is illustrated in Fig. 1.40. Under normal conditions, the thickness of the shielding from the corner to the inside cavity at the end-plug end of the cask is

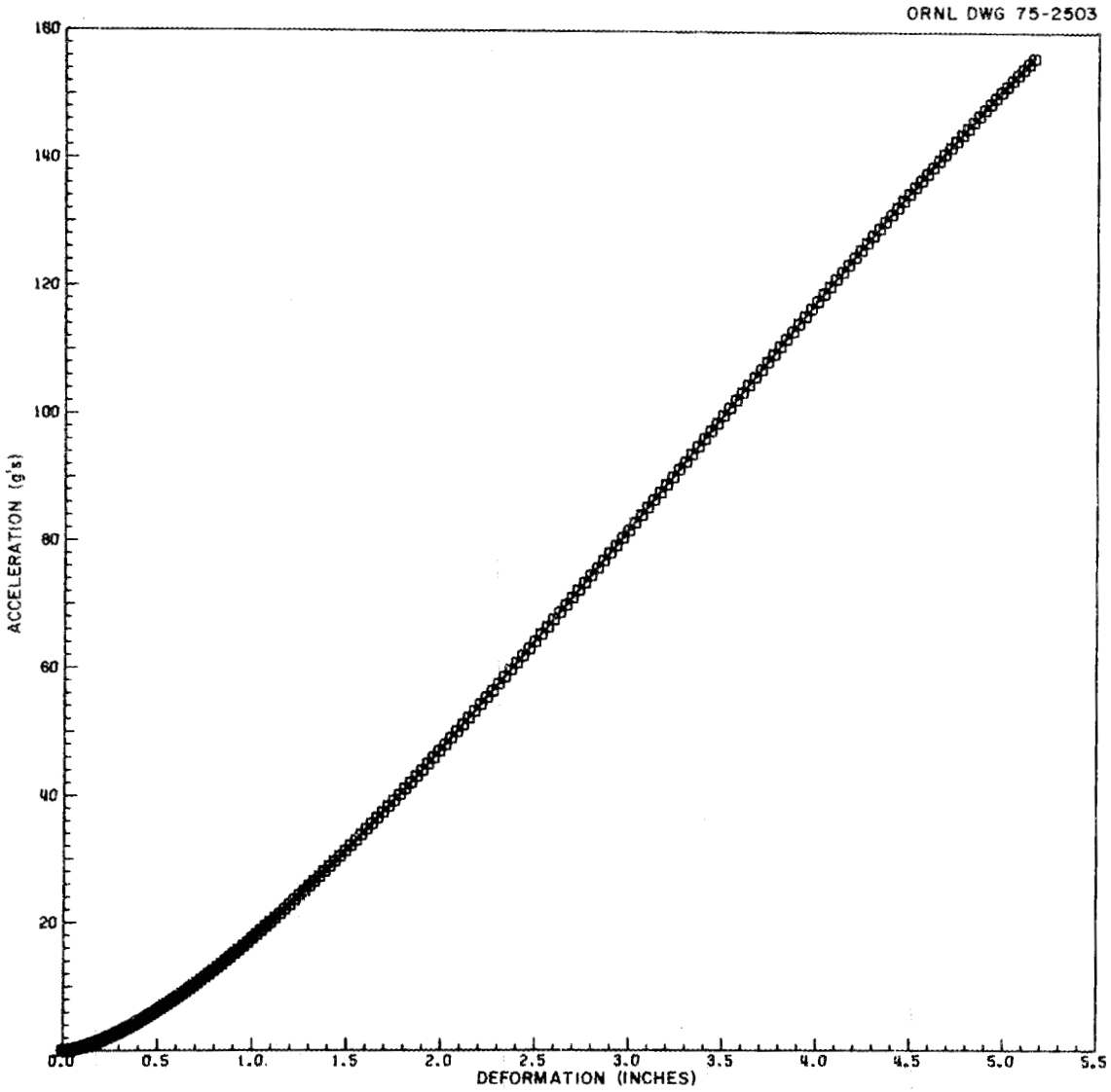

Fig. 1.36. Acceleration vs deformation computed for 30-ft free drop and corner impact of ORNL loop transport cask at an angle of 15° with a dynamic yield stress of 6000 psi.

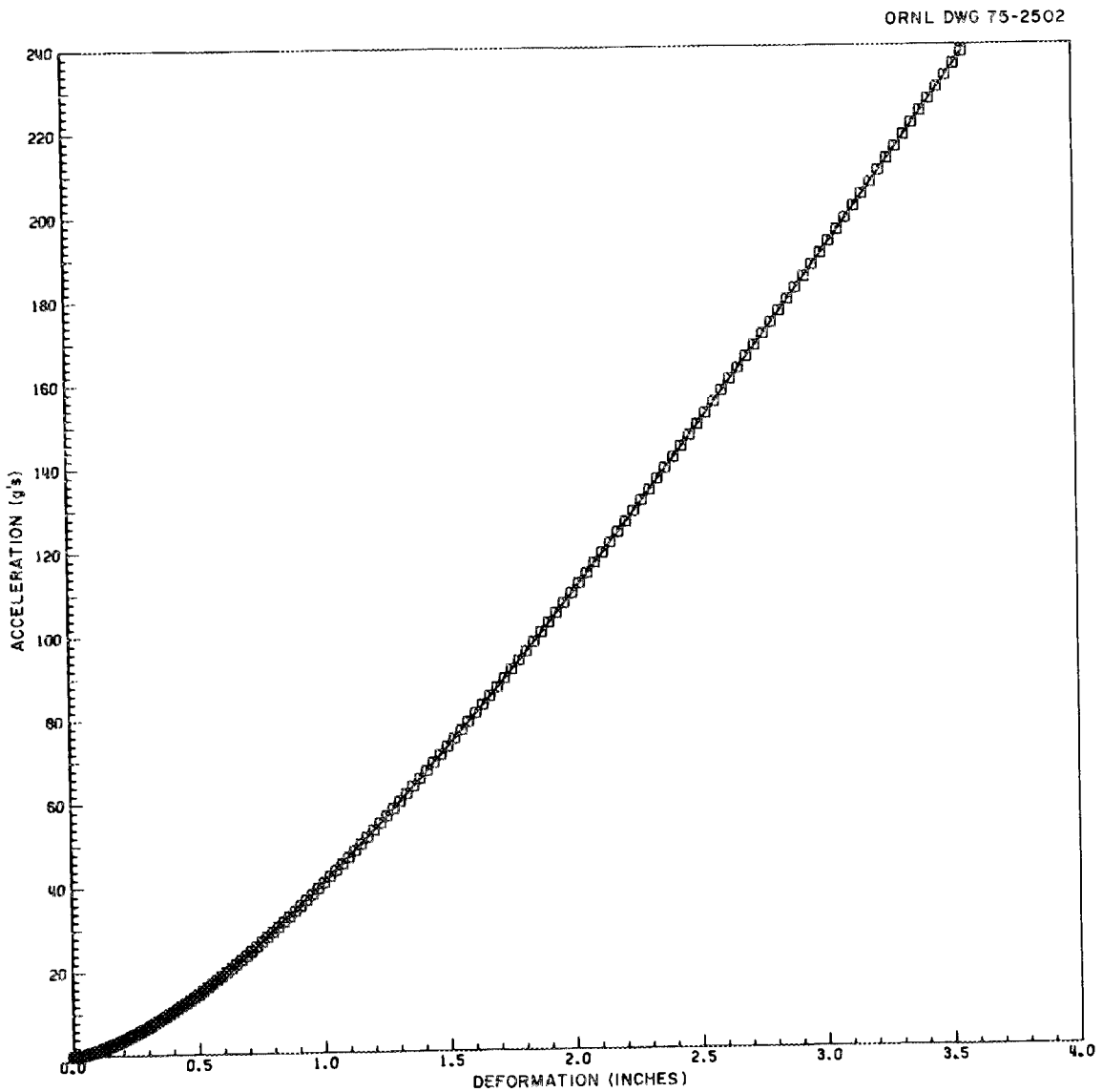

Fig. 1.37. Acceleration vs deformation computed for 30-ft free drop and corner impact of ORNL loop transport cask at an angle of 15° with a dynamic yield stress of 14,000 psi.

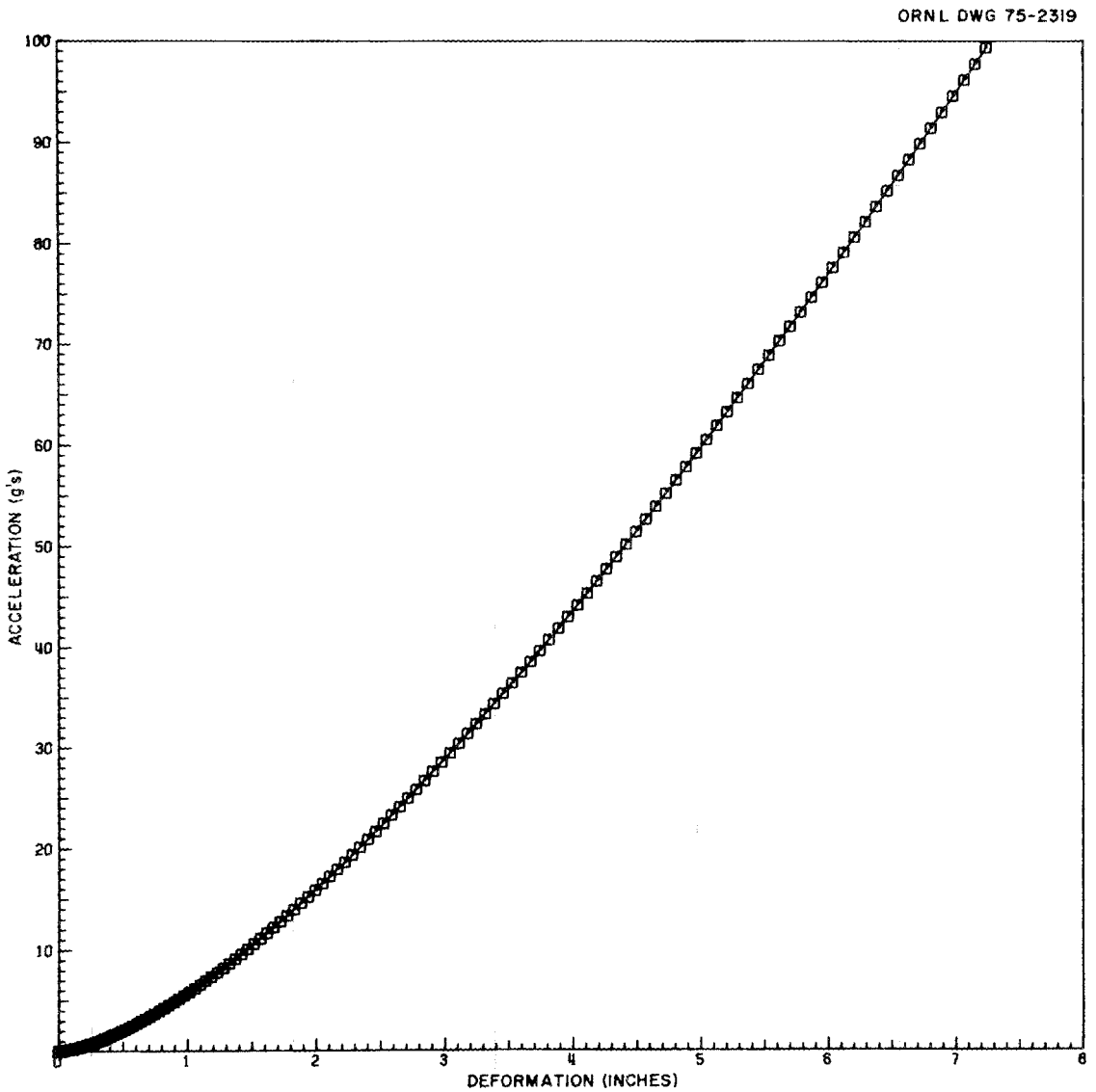

Fig. 1.38. Acceleration vs deformation computed for 30-ft free drop and corner impact of ORNL loop transport cask at an angle of 45° with a dynamic yield stress of 6000 psi.

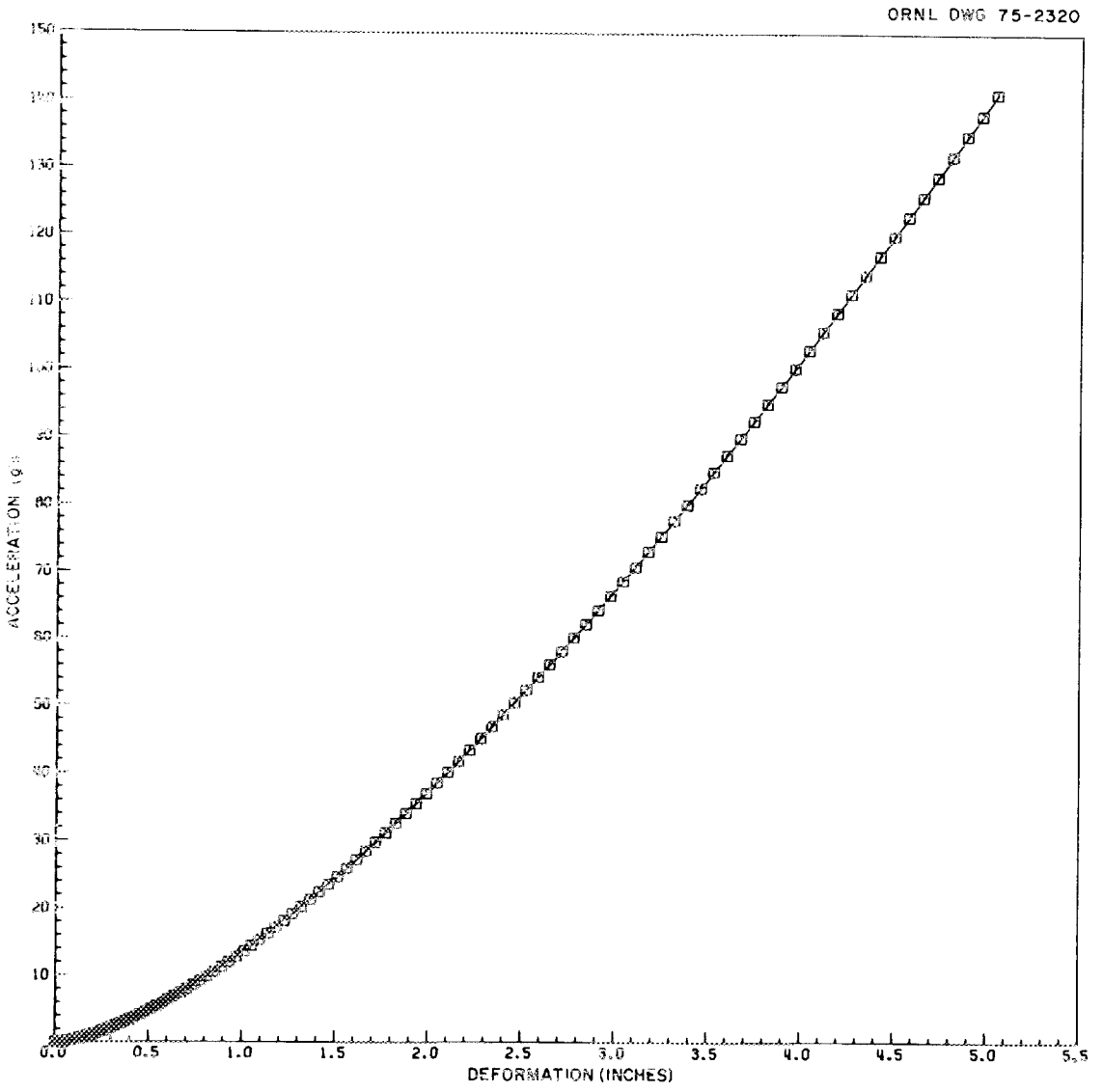

Fig. 1.39. Acceleration vs deformation computed for 30-ft free drop and corner impact of ORNL loop transport cask at an angle of 45° with a dynamic yield stress of 14,000 psi.

ORNL DWG 75-504

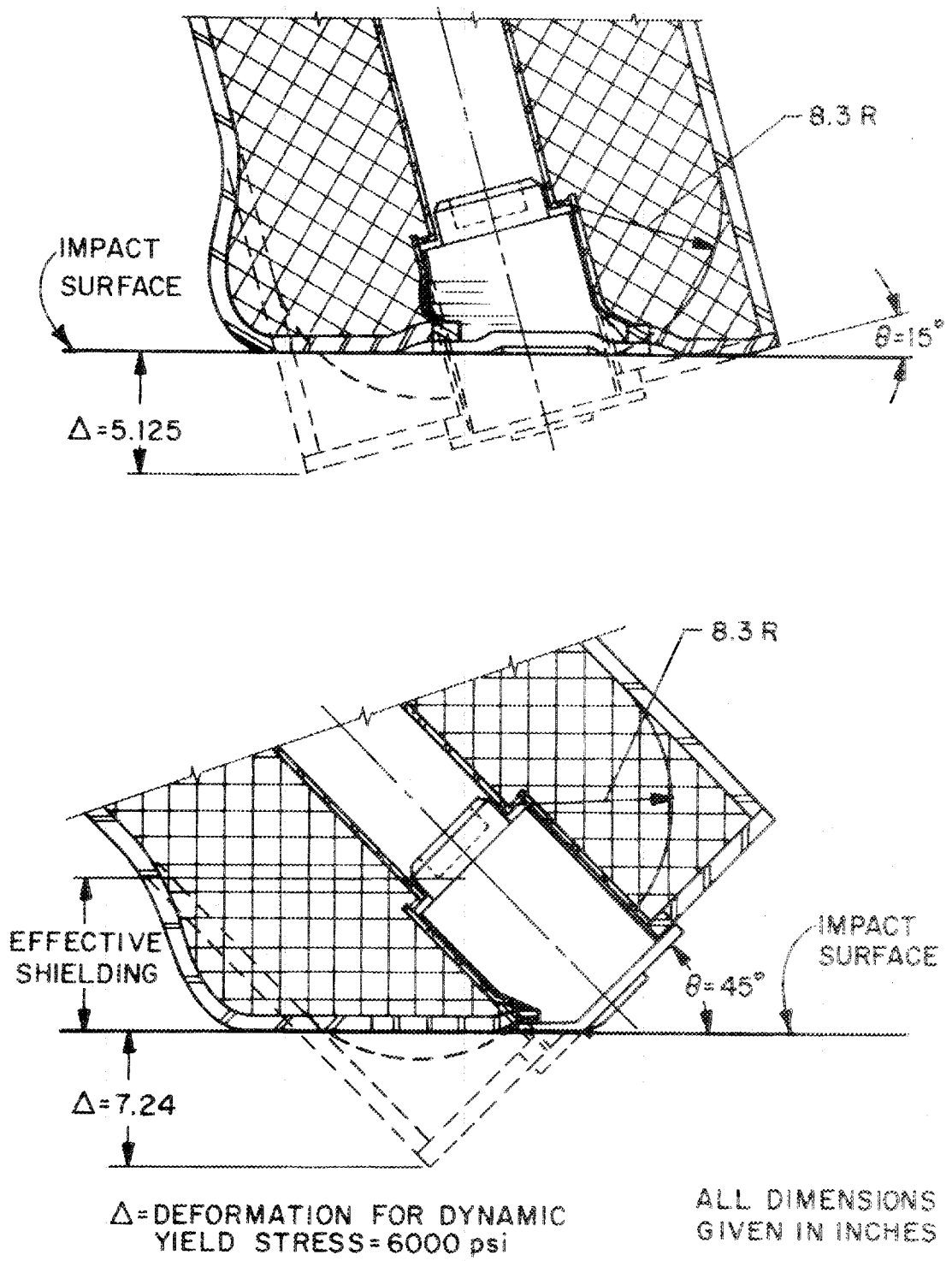

Fig. 1.40. Shielding loss resulting from 30-ft free drop and corner impact of ORNL loop transport cask with a dynamic yield stress of 6000 psi.

Table 1.6. Maximum deformation and maximum acceleration computed for the ORNL loop transport cask as a result of the 30-ft free drop and corner impact

Impact angle	Dynamic yield stress (psi)	Maximum deformation (in.)	Maximum deformation (g's)
$\theta = 15°$	6,000	5.15	156
	14,000	3.56	238
$\theta = 45°$	6,000	7.24	99
	14,000	5.04	141

$$\text{shielding distance} = [(12.0 - 2)^2 + (9.3)^2]^{1/2}$$

$$= 13.66 \text{ in.}$$

Since, as given in Table 1.6 and illustrated in Fig. 1.40, the maximum deformation is 7.24 in., after impact the

$$\text{effective shielding} = 13.66 - 7.24 = 6.42 \text{ in.}$$

The shielding losses resulting from either of the corner drop impact angles investigated are discussed with respect to permissible dose rates in Sect. 4.

When the corner drop impact angle is 15° and the dynamic yield stress is 14,000 psi, the cask acceleration would impose substantial stresses on the end access plug retaining bolts as a result of the combined deceleration of the plug and the cask contents. The acceleration of the cask in the vertical direction can be separated into axial and radial components, as illustrated in Fig. 1.41. The axial component of acceleration

$$a_a = a_x \cos \theta$$

$$= 238(\cos 15°) = 230\text{g's} , \qquad (1.94)$$

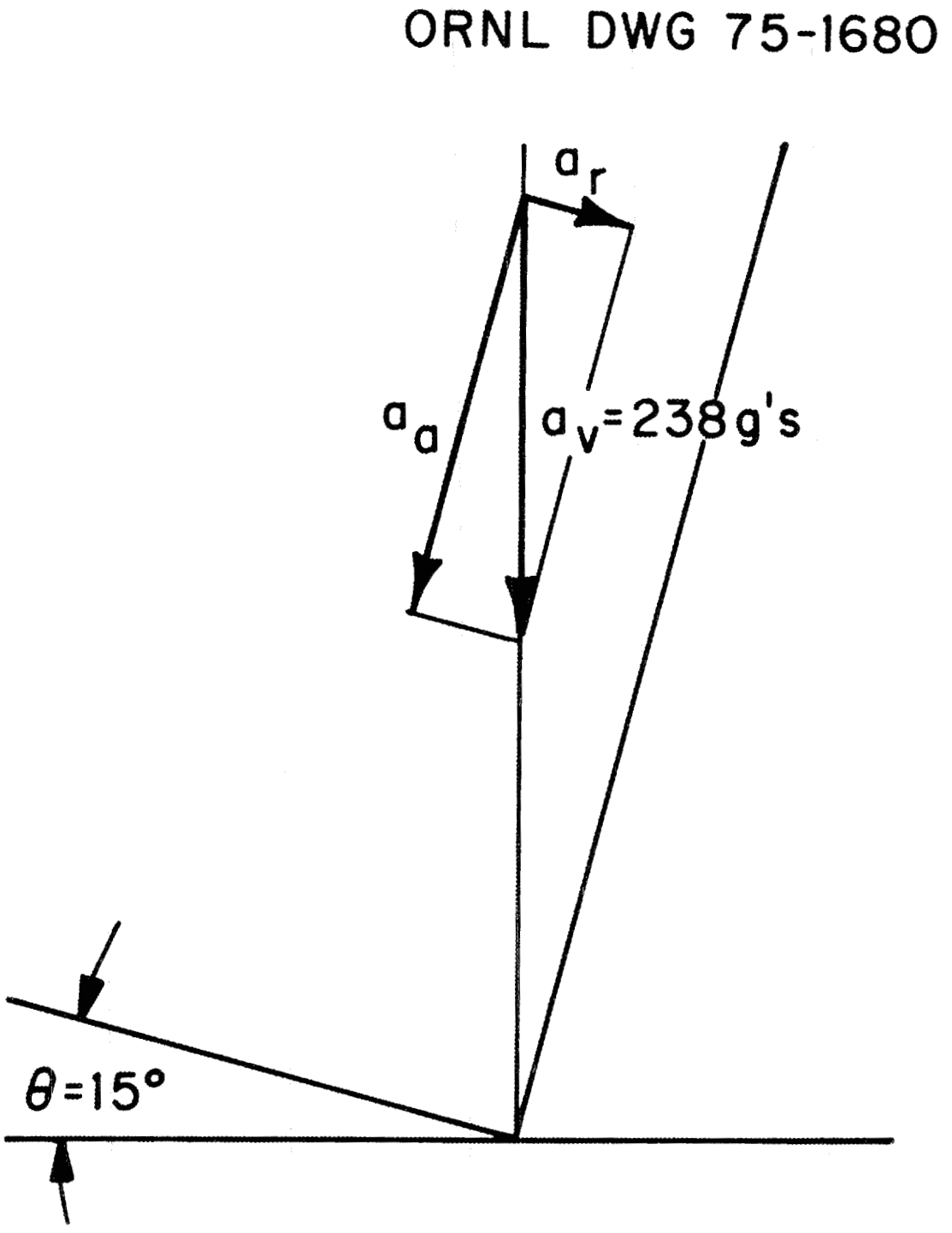

Fig. 1.41. Axial and radial components of vertical acceleration resulting from 30-ft free drop and corner impact of ORNL loop transport cask.

and the radial component of acceleration

$$a_r = a_v \sin 15° = 61.6g's \ . \tag{1.95}$$

If it is assumed that there is no friction between the body of the end access plug and the inner liner of the cask, the force (F) on the bolts retaining the plug is given by the equation

$$F = a_a W/g_c \ , \tag{1.96}$$

where

W = weight of cask plug plus weight of cask contents
= 150 + 177 lb,

g_c = gravitational constant ($lb_m \cdot ft/lb_f \cdot sec^2$).

Therefore,

$$F = 327(150 + 177) = 75{,}210 \text{ lb} \ .$$

Since there are eight 1/2-13NC bolts resisting this force, the force on each bolt f = 75,210/8 = 9401.25 lb. The stress on each bolt is given by the equation

$$\sigma = f/A \ , \tag{1.97}$$

where A = stress area of a 1/2-13NC bolt = 0.1419 in.^{2}. Thus the stress on each plug retaining bolt is

$$\sigma = 9401.25/0.1414 = 66{,}253 \text{ psi} \ .$$

This is less than the ultimate strength of the stainless steel bolts,[12] and the plug and cask contents will be retained with no exposure or radiation loss. The 30-ft free drop and corner impact of the ORNL loop transport cask at a 15° angle might cause a loss of secondary containment at the plug gasket, but primary containment of the cask contents

would be maintained by encapsulation or by an inner 2R container, as attested to in Appendix D.

1.6.1.3 Top impact orientation. Impact directly on the horizontal cask lifting eyes would result in deformation of the eyes, localized bending of the outer shell of the cask, and local displacement of the lead. The analysis technique discussed in Sect. 1.5.6 for the 3-ft free drop and top impact of the ORNL loop transport cask was used to evaluate the damage, deformation, and acceleration resulting from the 30-ft free drop and top impact of the cask. The complete response of the cask to this impact orientation is given in Table 1.7.

Table 1.7. Response of ORNL loop transport cask to 30-ft free drop and impact on top lifting eyes

	Response and cask with dynamic yield stress of	
	6000 psi	14,000 psi
Maximum acceleration, g's	250	310
Deformation of lugs, in.	0.78	1.28
Deformation of cask, in.	1.14	0.26
Energy absorbed by lugs, in.·lb	2,400,000	4,650,000
Energy absorbed by cask, in.·lb	3,350,000	1,100,000
Total energy, in.·lb	5,750,000	5,750,000

The response curves used to determine the energy fractions dissipated in deforming the lifting eyes and cask body are shown in Fig. 1.42, and the corresponding energy-deformation relationships are illustrated in Figs. 1.43, 1.44, and 1.45. The model of the lifting eyes used as input to the 1014 CASK computer program, which was used to obtain the response of the cask lifting eyes to impact, is illustrated in Fig. 1.46(a), and the resulting cask shielding loss is illustrated in Fig. 1.46(b). The 30-ft free drop and subsequent impact of the ORNL

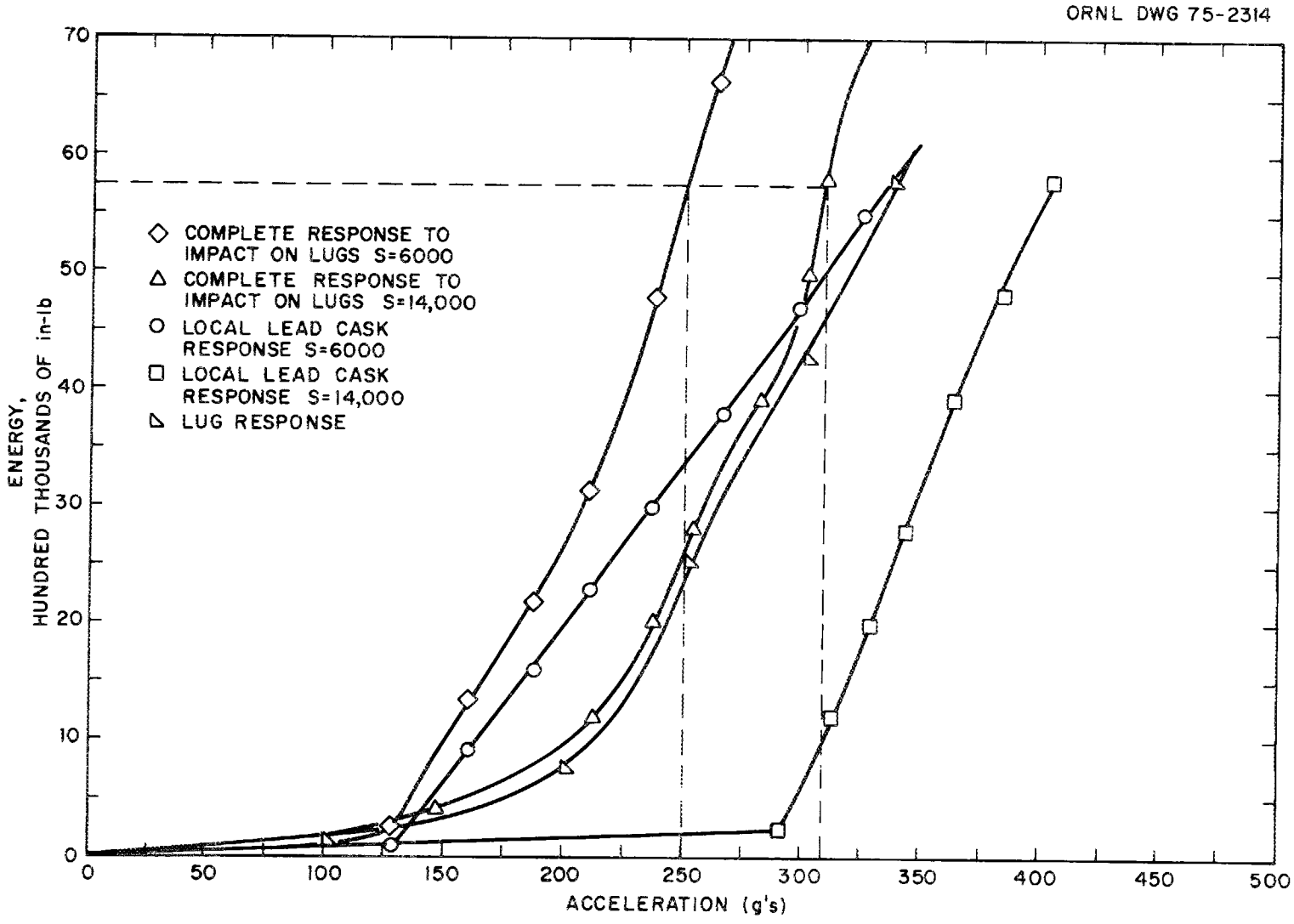

Fig. 1.42. Energy vs acceleration for cask lifting eyes and body and complete response resulting from 30-ft free drop and top impact of ORNL loop transport cask.

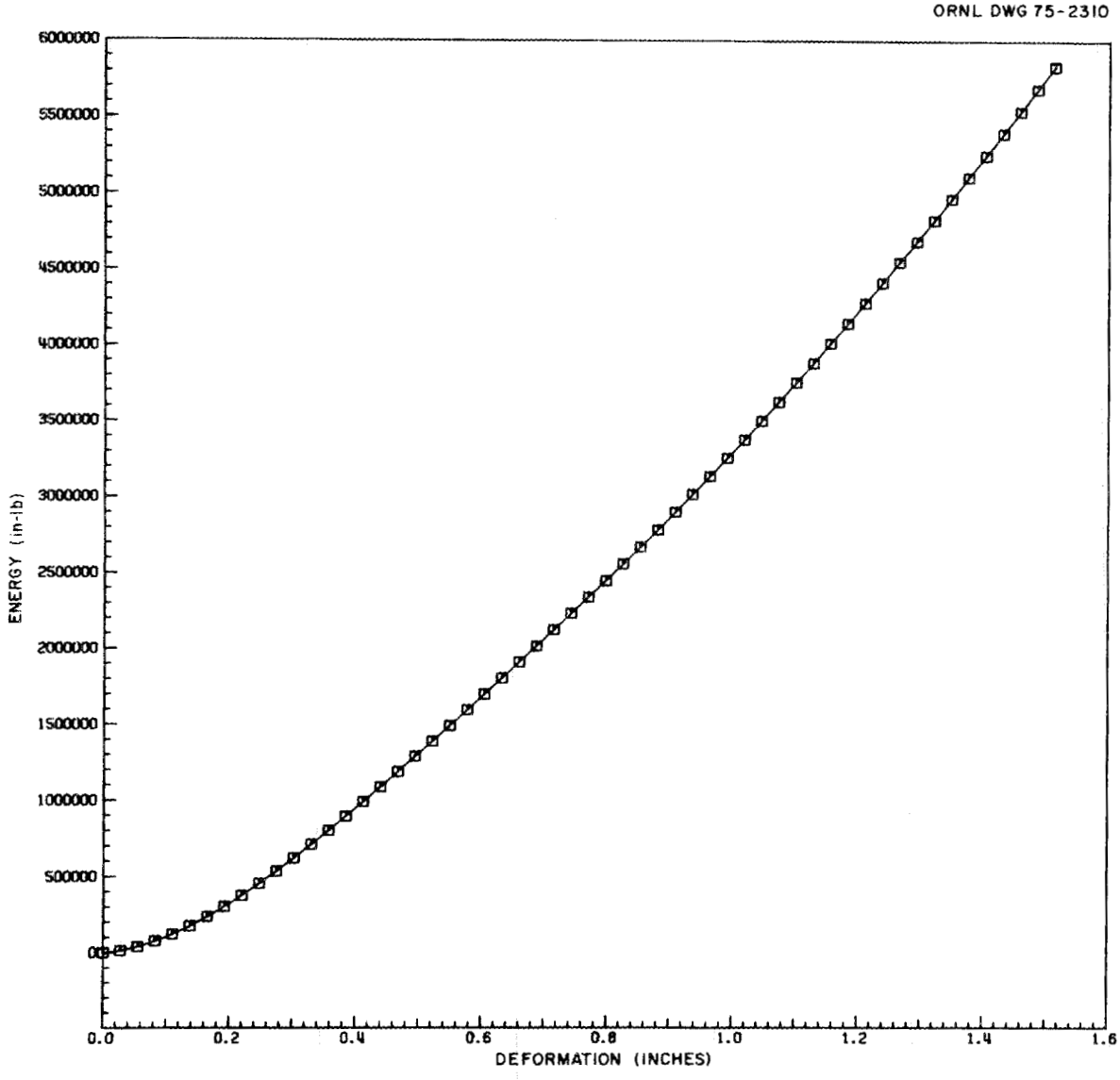

Fig. 1.43. Energy vs deformation for lifting eyes resulting from 30-ft free-drop top impact of ORNL loop transport cask.

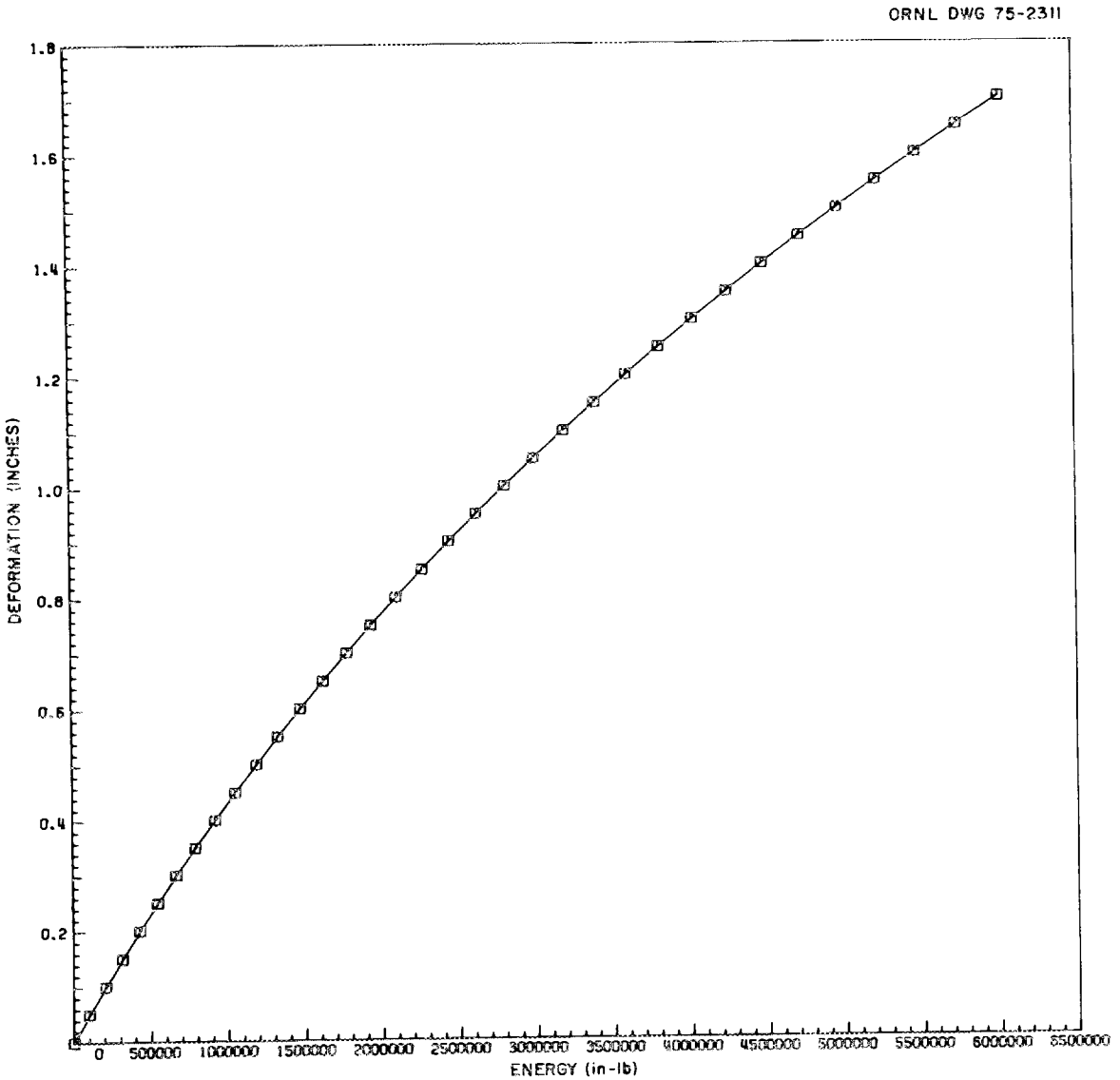

Fig. 1.44. Deformation vs energy computed for cask body with dynamic yield stress of 6000 psi as a result of 30-ft free drop and top impact of ORNL loop transport cask.

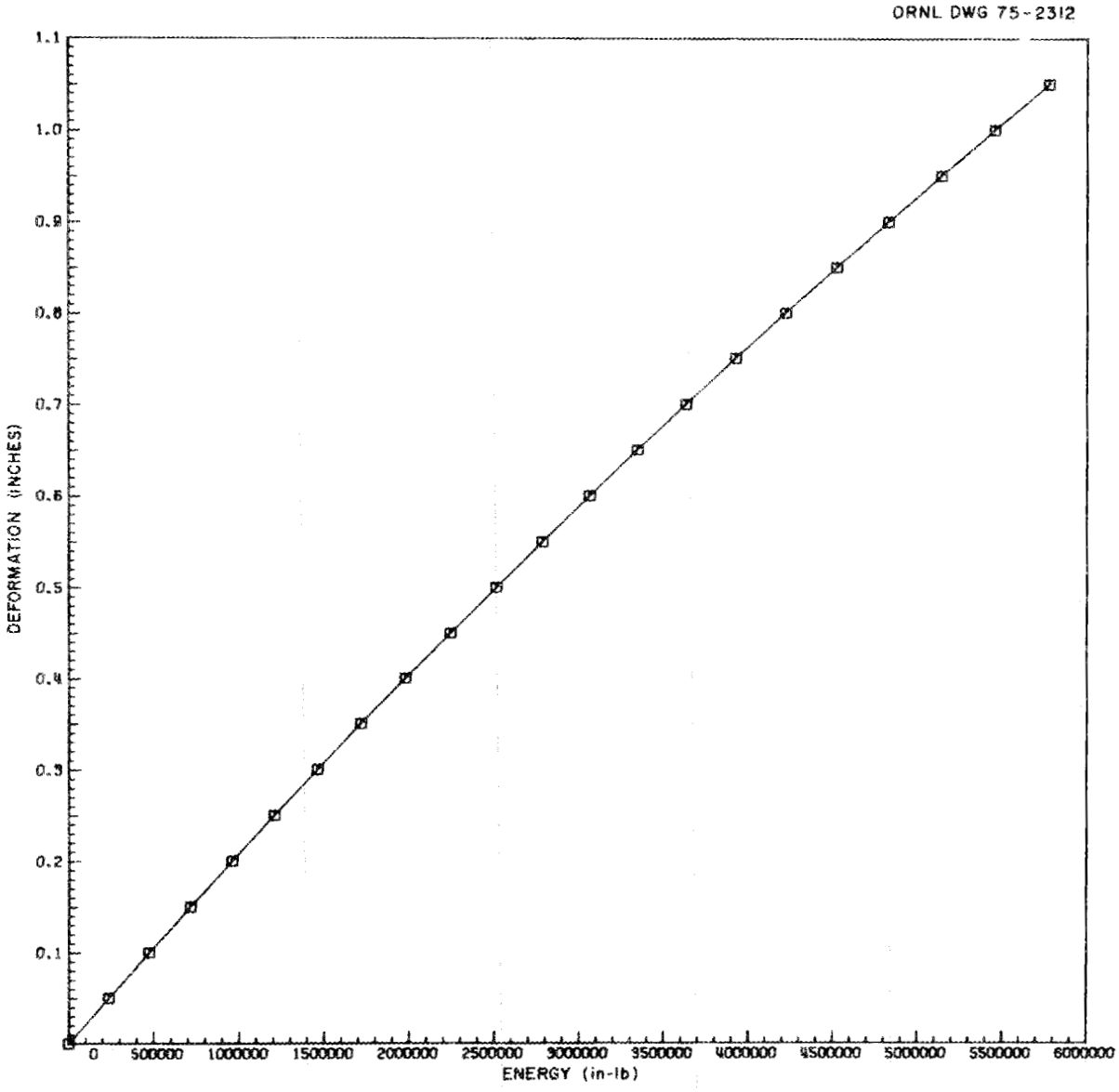

Fig. 1.45. Deformation vs energy computed for cask body with dynamic yield stress of 14,000 psi as a result of 30-ft free drop and top impact of ORNL loop transport cask.

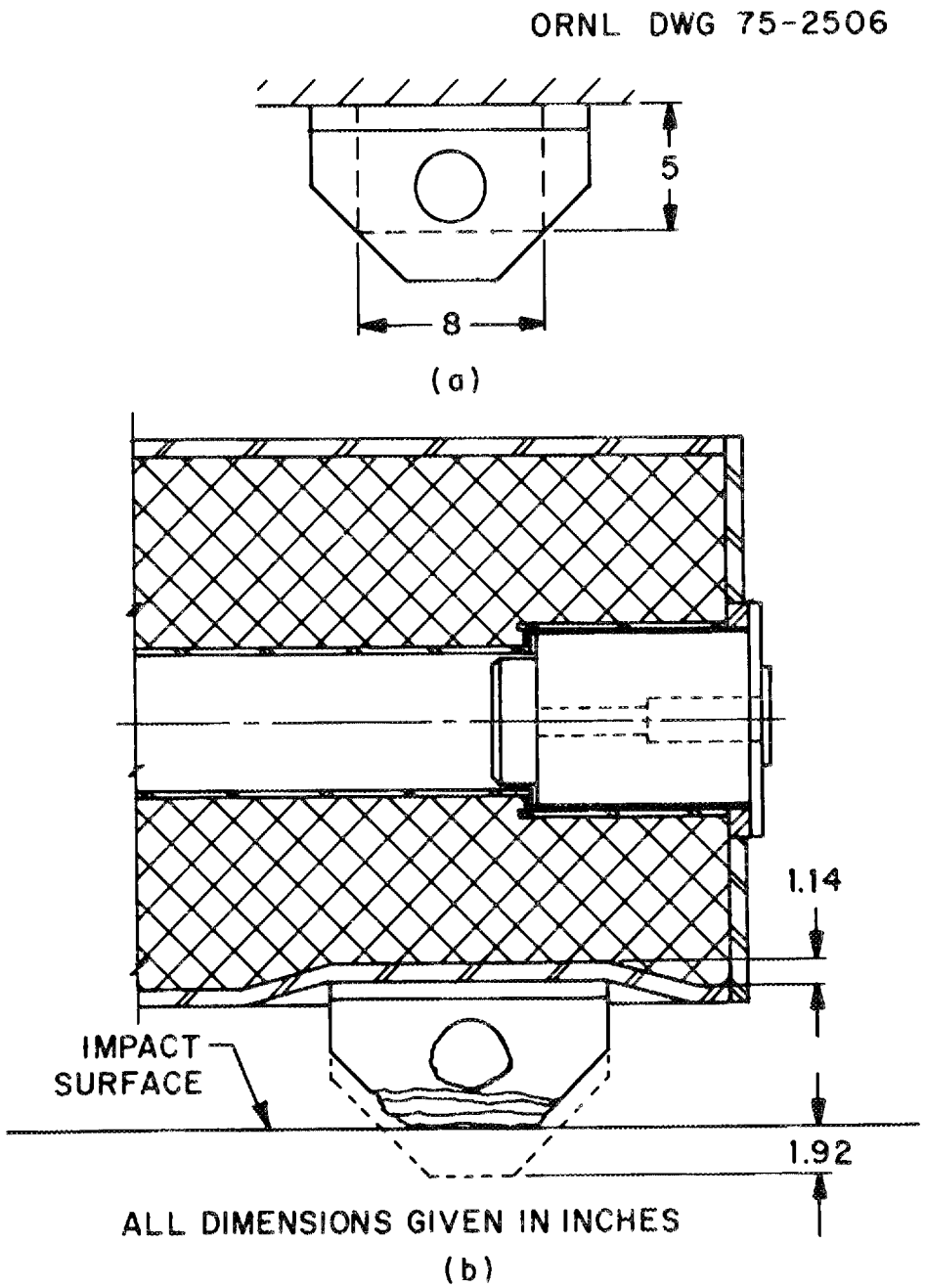

Fig. 1.46. ORNL loop transport cask (a) lifting eye model and (b) shielding loss resulting from 30-ft free drop and top impact of cask on lifting eye for lead dynamic yield stress of 6000 psi.

loop transport cask on its top lifting eyes will not result in a significant loss of shielding, and the structural integrity of the cask will not be affected. The accelerations experienced by the cask in the top impact orientation would be less than those experienced in the side impact orientation.

1.6.2 Puncture

The second in the sequence of hypothetical accident conditions to which the cask must be subjected is a free drop through a distance of 40 in. to strike, in a position in which maximum damage is expected, the top end of a vertical cylindrical mild-steel bar mounted to an essentially unyielding horizontal surface. The mild-steel bar shall have a diameter of 6 in., with the top horizontal and its edge rounded to a radius of not more than 1/4 in., and the bar shall be of such length that it will cause maximum damage to the package but not less than 8 in. long. The long axis of this bar shall be perpendicular to the unyielding horizontal surface and normal to the surface of the package upon impact.

Previously published data[25] indicate that a lead-shielded cask clad with mild steel that weighs 16,000 lb would require an outer shell thickness of 0.41 in. to resist puncture, as indicated in Fig. 1.47, which is a reproduction of Fig. 23 in ref. 25 with the equation for the relationship between the physical properties of the outer shell and the cask weight added. Inasmuch as the outer shell of the ORNL loop transport cask is 0.68 in. thick, it was concluded that the outer shell of the cask would not be punctured as a result of a 40-in. free drop and impact on the 6-in.-diam mild steel bar. If the cask were to impact on the bar in the vicinity of one of the cask closures, secondary containment would be lost and there would be a minimal local reduction in shielding.

1.6.3 Thermal condition

The third in the sequence of hypothetical accident conditions to which the package must be subjected is exposure for 30 min within a source of radiant heat having a temperature of 1475°F and an emissivity

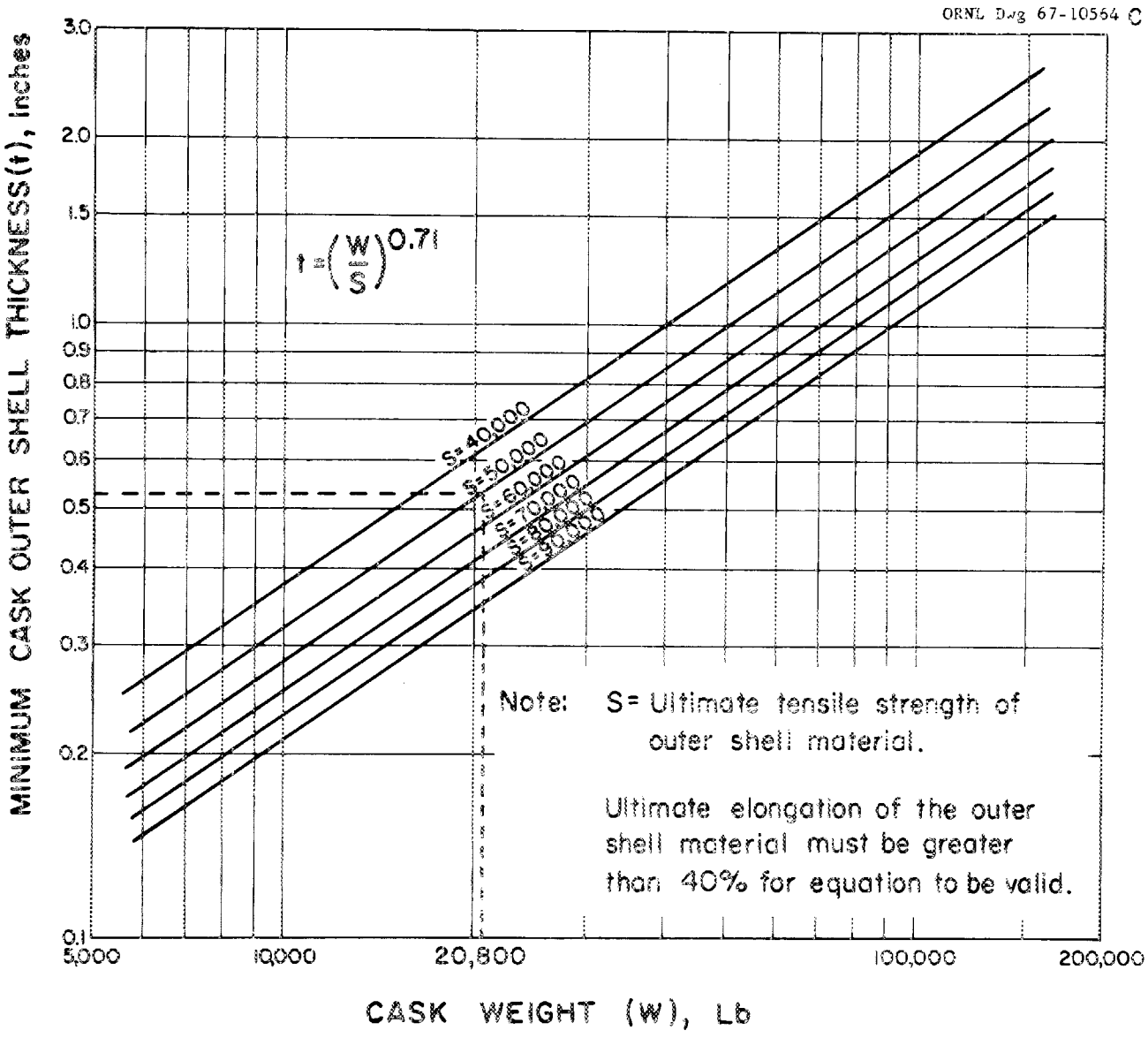

Fig. 1.47. Outer shell physical property and cask weight relationship (from ref. 25).

coefficient of 0.9 or equivalent. For calculational purposes, it shall be assumed that the package has an absorption coefficient of 0.8. The package shall not be cooled artificially until 3 hr after the 30-min test period has expired and the temperature at the center of the package has begun to fall, unless it can be shown that the temperature at the center of the package has begun to fall in less than 3 hr.

The effects of the stipulated thermal condition on the ORNL loop transport cask were analyzed by using the same geometric model used for analysis of the heat conditions of normal transport in a HEATING-3 computer calculation. This model, the maximum temperatures and pressures computed to result from the prescribed thermal condition, and an assessment of potential damage to the cask are discussed in Sect. 2. Exposure of the ORNL loop transport cask to the thermal condition will not affect its ability to withstand water immersion. No thermal gradients (temperature differences) large enough to result in significant thermal stresses will result from exposure of the cask to the accident thermal condition.

1.6.3.1 Thermal expansion. During exposure of the ORNL loop transport cask to the thermal condition, a portion of the lead will melt. The maximum quantity of melted lead was computed to occur a few minutes after termination of the 30-min exposure, as indicated in Sect. 2. It is not known whether the outer shell of the cask will be ruptured as a result of the free-drop condition. If the cask shell was not ruptured, it would be required to expand to accommodate the increase in the volume of lead resulting from melting and thermal expansion. The following calculations demonstrate that the outer shell of the cask can expand to accommodate the increased volume without catastrophic failure. The assumptions made in the analysis of the heat condition of normal transport were also made for this analysis, and the temperatures, dimensions, etc., used in the calculations are given in Table 1.8. The location of the dimension symbols given in Table 1.8 is shown in Fig. 1.48. The temperatures given in Table 1.8 are average temperatures taken from computer output, and the thermal coefficients (α) of expansion are from Table 1.1.

Table 1.8. Parameters used to evaluate effects of thermal expansion from hypothetical accident on the ORNL loop transport cask

Dimension symbol	Final temperature (°F)	ΔT (°F)	Coefficient of thermal expansion (in./in.·°F)	Cold dimension (in.)	Final dimension (in.)
r_o	550	480	6.5×10^{-6}	11.31	11.35
r_i	410	340	9.2×10^{-6}	3.00	3.01
r_p	420	350	9.2×10^{-6}	4.00	4.01
r_1				10.46	
r_2				9.31	
ℓ_1	410	340	9.2×10^{-6}	34.81	34.92
ℓ_2	420	350	9.2×10^{-6}	8.88	8.91
ℓ_3	550	480	6.5×10^{-6}	43.69	43.83
ℓ_4	Melted lead			2.10	

ORNL DWG 75-498

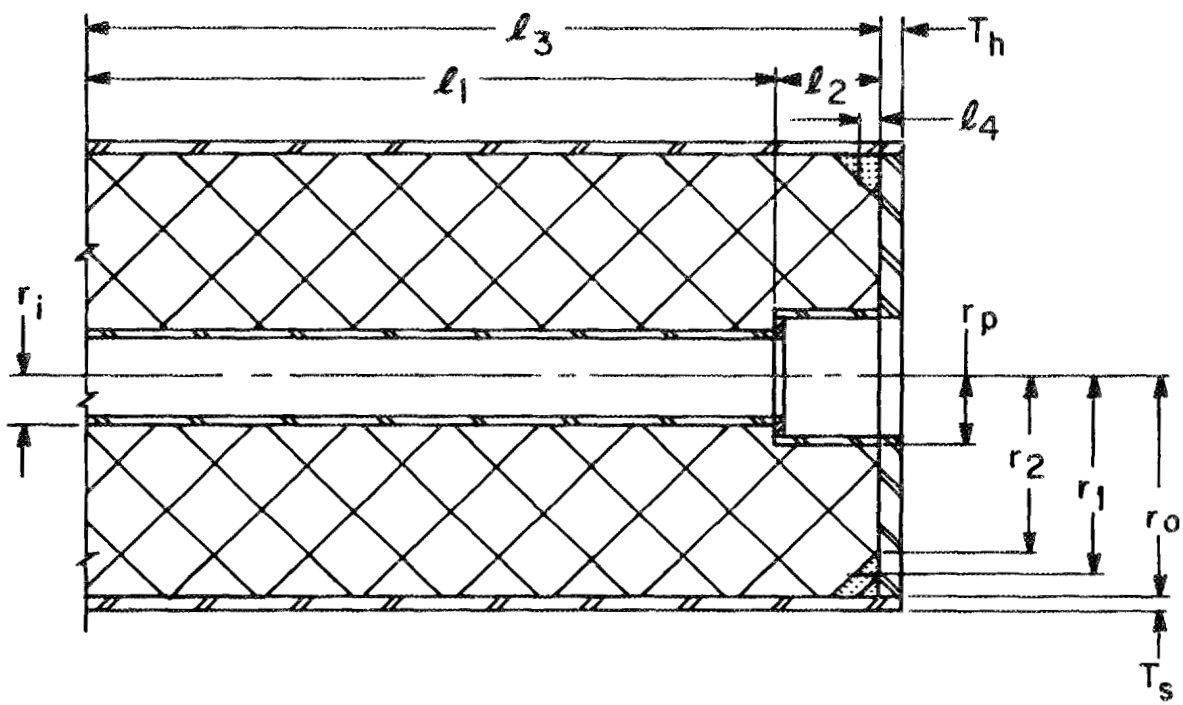

Fig. 1.48. Model of ORNL loop transport cask used for evaluation of thermal expansion effects.

From the dimension symbols illustrated in Fig. 1.48, the volume of lead in the cask outer shell is given by the following equation:

$$V = \pi[\ell_1(r_o^2 - r_i^2) + \ell_2(r_o^2 - r_p^2)] \ . \tag{1.98}$$

Substitution of the cold-dimension data given in Table 1.8 in Eq. (1.98) yields the initial volume (V_i) of the cask outer shell:

$$V_i = \pi\{34.81[(11.31)^2 - (3.0)^2] + 8.88[(11.31)^2 - (4.0)^2]\}$$

$$= 16{,}127 \text{ in.}^3 .$$

Substitution of the appropriate final-dimension data given in Table 1.8 in Eq. (1.98) yields the final volume (V_f) of the cask outer shell:

$$V_f = \pi\{34.92[(11.35)^2 - (3.01)^2] + 8.91[(11.35)^2 - (4.01)^2]\}$$

$$= 16{,}294 \text{ in.}^3 \ .$$

The volume of melted lead (V_m) is given by the following equation:

$$V_m = 2\pi[r_1(r_0 - r_2)(\ell_4/2)] \tag{1.99}$$

$$= 2\pi[10.46(11.31 - 9.31)(2.10/2)]$$

$$= 138 \text{ in.}^3 \ .$$

The final volume of lead (V_L) is given by the equation

$$V_L = V_i + V_i\alpha_T + V_m\alpha_m \ , \tag{1.100}$$

where

α_T = volumetric expansion coefficient for solid lead
= 0.024,[9]

α_m = volumetric expansion coefficient for melted lead
= 0.0325.[9]

Therefore,

$$V_L = 16{,}127 + 16{,}127(0.024) + 138(0.0325)$$

$$= 16{,}518.5 \text{ in.}^3 \quad .$$

The increase in volume that must be accommodated by the outer shell of the cask is as follows:

$$\Delta V = V_L - V_f = 16{,}518.5 - 16{,}294 = 224.5 \text{ in.}^3 \quad . \tag{1.101}$$

The outer shell of the ORNL loop transport cask is a complex structure braced in both the radial and longitudinal directions. It is further complicated by being of laminated construction. It is felt that most of the outer-shell expansion will be in the form of circumferential strain. The assumption that all of the strain will be in the circumferential direction is conservative when used to show that the cask shell can elongate to accommodate the increase in the volume of lead. This increase is given by the equation

$$\Delta V = \ell_3 \pi \{[r_0(1 + \varepsilon)]^2 - r_0^2\} \ , \tag{1.102}$$

where ε = the circumferential strain (in./in.). Solution of Eq. (1.102) for ε yields

$$\varepsilon^2 = 2\varepsilon - \Delta V/(\ell_3 \pi r_0^2) = 0 \ . \tag{1.103}$$

By the quadratic formula,

$$\varepsilon = \{-2 \pm [(2)^2 + 4(1)(\Delta V/\ell_3 \pi r_0^2)]^{1/2}\}/2 \tag{1.104}$$

$$= \{-2 \pm [(2)^2 + 4(224.5)/43.83\pi(11.35)^2]^{1/2}\}/2$$

$$= 0.0063 \text{ in./in.}$$

This strain and the corresponding stress are small when compared with the ultimate strain (elongation) and ultimate stress of mild steel (see Table 1.1). It was therefore concluded that the outer shell of the ORNL loop transport cask will not rupture as a result of differential thermal expansion caused by exposure to the stipulated thermal condition of the hypothetical accident.

1.6.3.2 Pressure stresses. The maximum pressure within the cask cavity during exposure of the ORNL loop transport cask to the thermal condition of the hypothetical accident was computed to be 9.4 psig (see Sect. 2). The tensile stress (σ_t) in the bolts retaining the access plugs that will result from this internal pressure is given by the equation

$$\sigma_t = p\pi r^2/(nA) \ , \tag{1.105}$$

where

p = pressure (psi),

r = radius of the plug (in.),

n = number of bolts retaining the plug,

A = stress area of one bolt (from ref. 17) (in.^{2}).

The area of each cask plug that is pressure loaded has a diameter of approximately 8 in., and each plug is secured by eight 1/2-13NC bolts. Therefore, the stress in the bolts is

$$\sigma_t = 9.4\pi(4)^2/8(0.141)$$

$$= 419 \text{ psi} \ .$$

At this stress, the bolts will continue to secure the plugs to the cask, and shielding effectiveness would be maintained.

1.6.4 Water immersion

The fourth and last condition in the sequence of hypothetical accident conditions to which the package must be subjected is immersion in water to the extent that all portions of the package are under at least 3 ft of water for a period of not less than 8 hr.

It has been concluded that a 30-ft free drop and corner impact of the ORNL loop transport cask at a 15° angle would in all probability cause failure of the plug seals and a loss of secondary containment. Immersion in water would therefore result in flooding of the cask cavity. It has also been concluded that primary containment of the cask would not be breached as a result of any of the preceding hypothetical accident conditions. Thus the encapsulated cask contents would not be in direct contact with the water, and no radioactive material would be transferred to the water. The water would not decrease the effectiveness of the cask by corrosion or similar deterioration; the effect of the cavity flooding on criticality is covered in Sect. 5.

1.7 Special Form

The radioactive and fissile materials shipped in the ORNL loop transport cask are either encased in unbreached metal cladding or placed in a 2R container[4] or encapsulated to conform with the requirements for special form materials. The ORNL Operations Division certifies that its encapsulated materials conform to the special form requirements of Annex 4 of MC 0529.[2] The prescribed tests have been performed on a number of capsule designs. When a design is similar in size, mass, wall thickness, material, weld design, etc., to a previously tested capsule, the design is certified as special form on the basis of previous test results. If this similarity does not exist, a prototype must be tested as prescribed by the regulations.[1] A typical example of a special form capsule is illustrated in Fig. 1.49. The capsule cross section may be circular or rectangular.

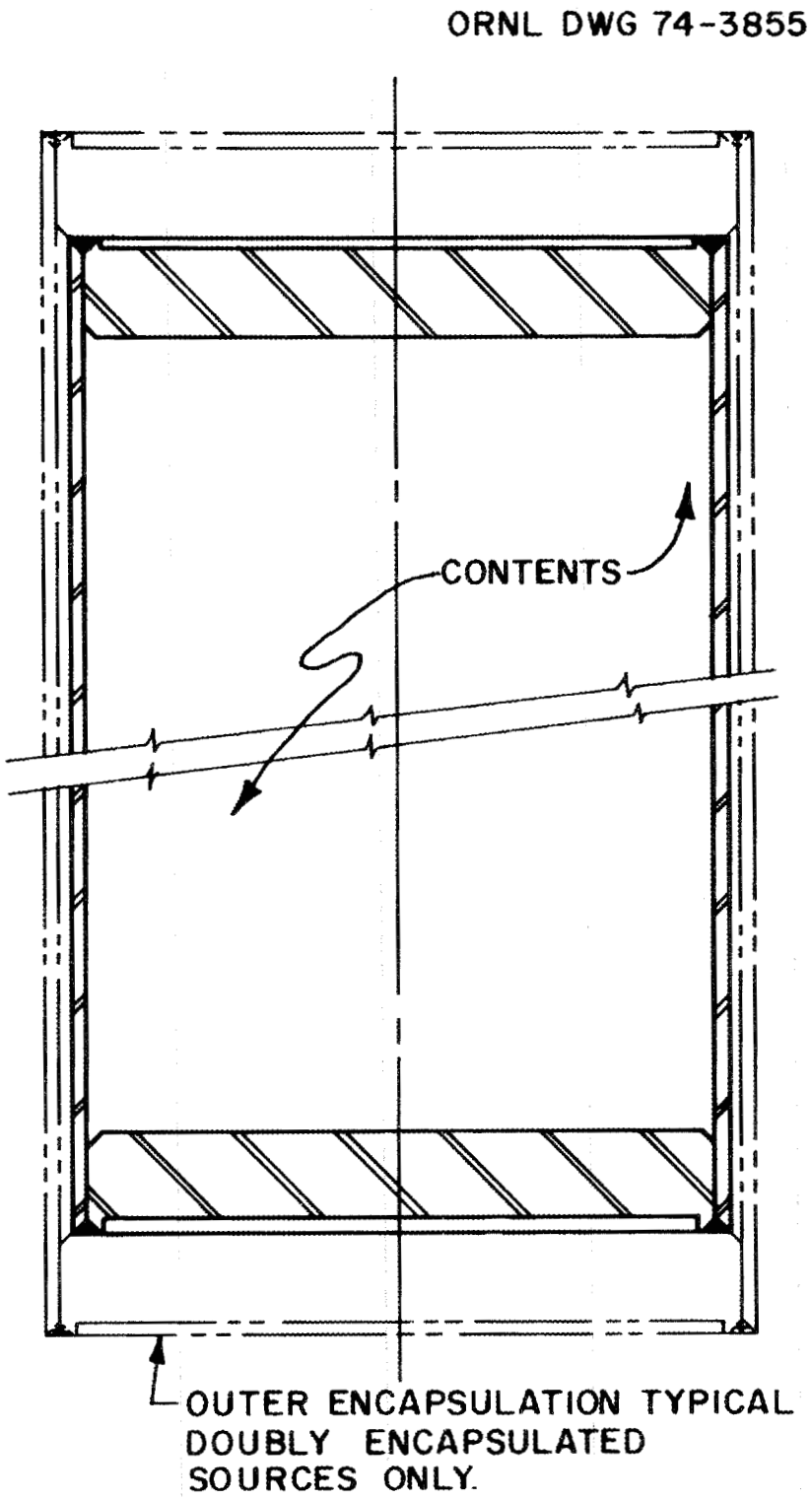

Fig. 1.49. Typical special form encapsulation.

1.8 Inner Container Design

Typical inner 2R containers used at ORNL for shipment of solid radioactive material are illustrated in Figs. 1.50 through 1.53. The materials of construction and bolting for these containers are limited to austenitic stainless steels or other materials which maintain their ductility at temperatures as low as -40°F. These materials are purchased in accordance with ASME or ASTM specifications. The design temperature for the 2R container is taken as 440°F, which is the maximum temperature computed for the inner container under normal conditions of transport (Sect. 2). When it is assumed that the 2R container and contents are assembled at an ambient temperature of 70°F and air pressure of 14.7 psia, a temperature of 440°F will produce a pressure inside the container of

$$p_2 = p_1 T_2/T_1 = [14.7(440 + 460)]/(70 + 460) \tag{1.106}$$

$$= 25 \text{ psia} .$$

When it is assumed that the least external pressure experienced by the container will be 0.5 times the standard atmospheric pressure (Sect. 1.5.3), the greatest gauge pressure experienced will be 25 - 7.35 = 17.7 psig. The design pressure for the 2R container was therefore established conservatively as 20 psig. The design stress is 10,300 psi, which is the minimum listed in Sect. VIII[26] tables for a temperature of 500°F.

The 2R containers used in the ORNL loop transport cask will have the minimum head and wall thicknesses given in Table 1.9. These dimensions are based on the requirements of Specification 2R[4] and Sect. VIII of the ASME Boiler and Pressure Vessel Code. The equations used to determine these thicknesses are the applicable equations for sizing pressure vessel shells and heads given in Sect. VIII of the ASME code. The applicable equation for determining the shell thickness is Eq. (1) in paragraph UG 27:

$$t = pr/(SE - 0.6p) , \tag{1.107}$$

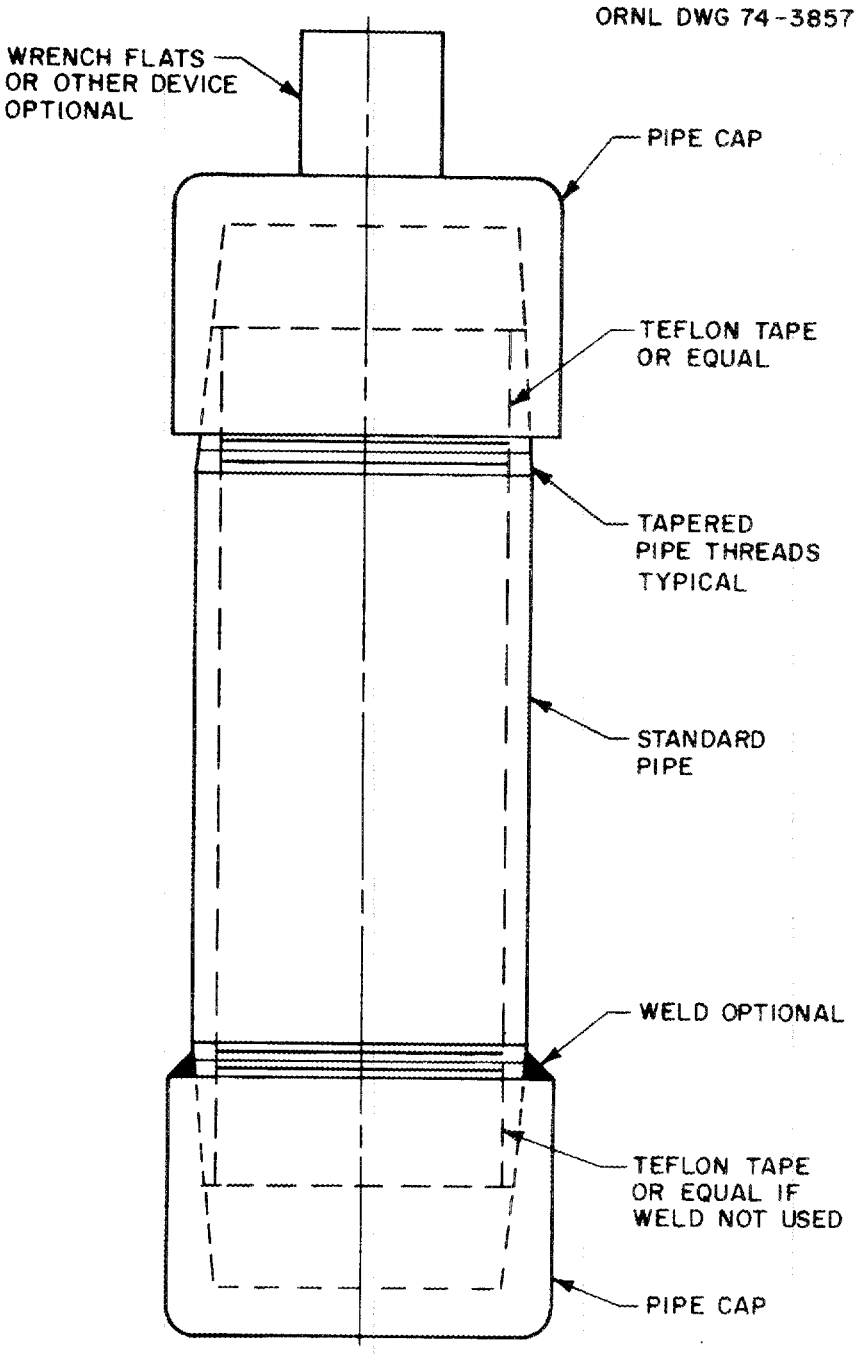

Fig. 1.50. Pipe element 2R container.

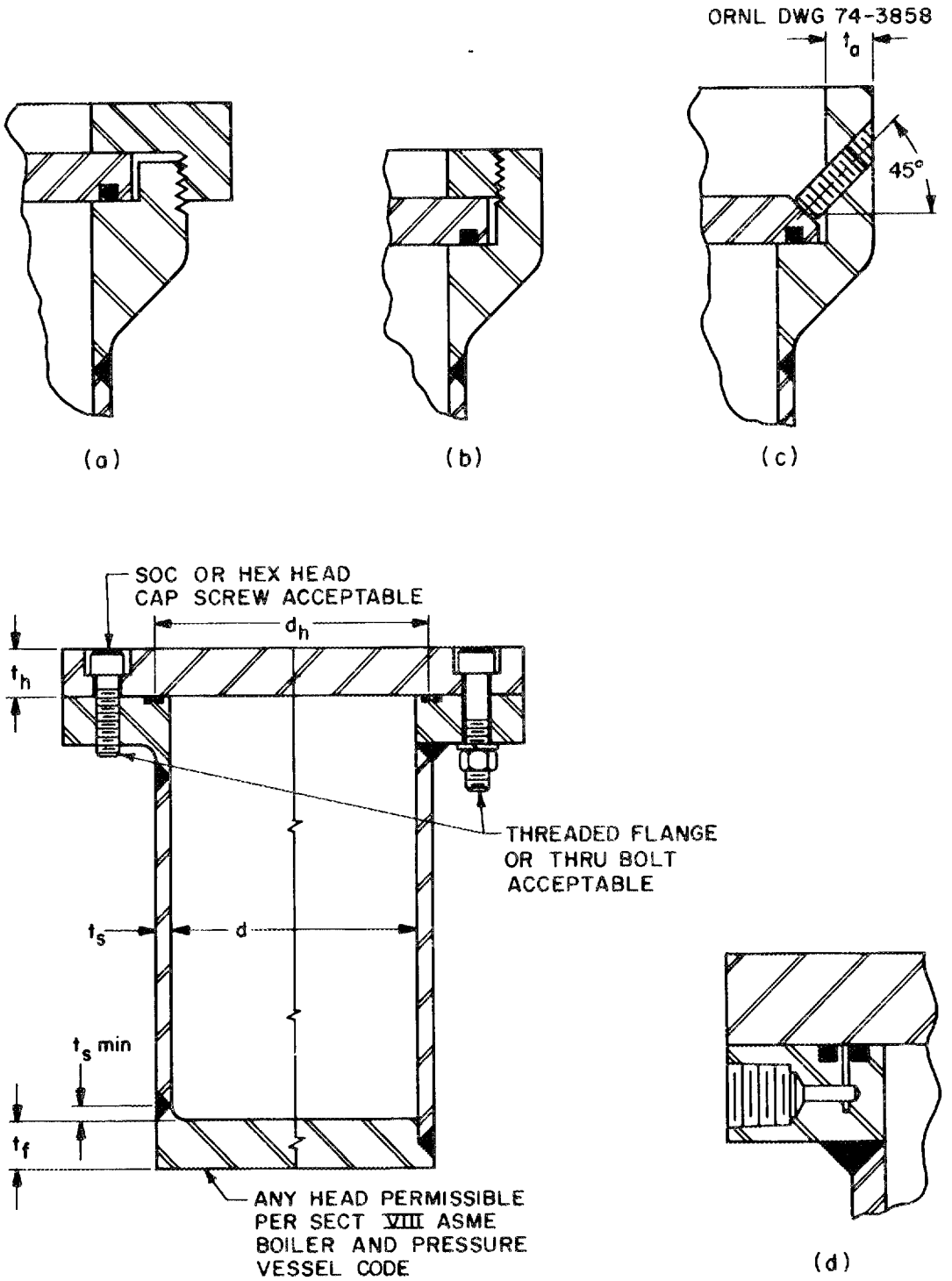

Fig. 1.51. Details of typical flanged 2R container.

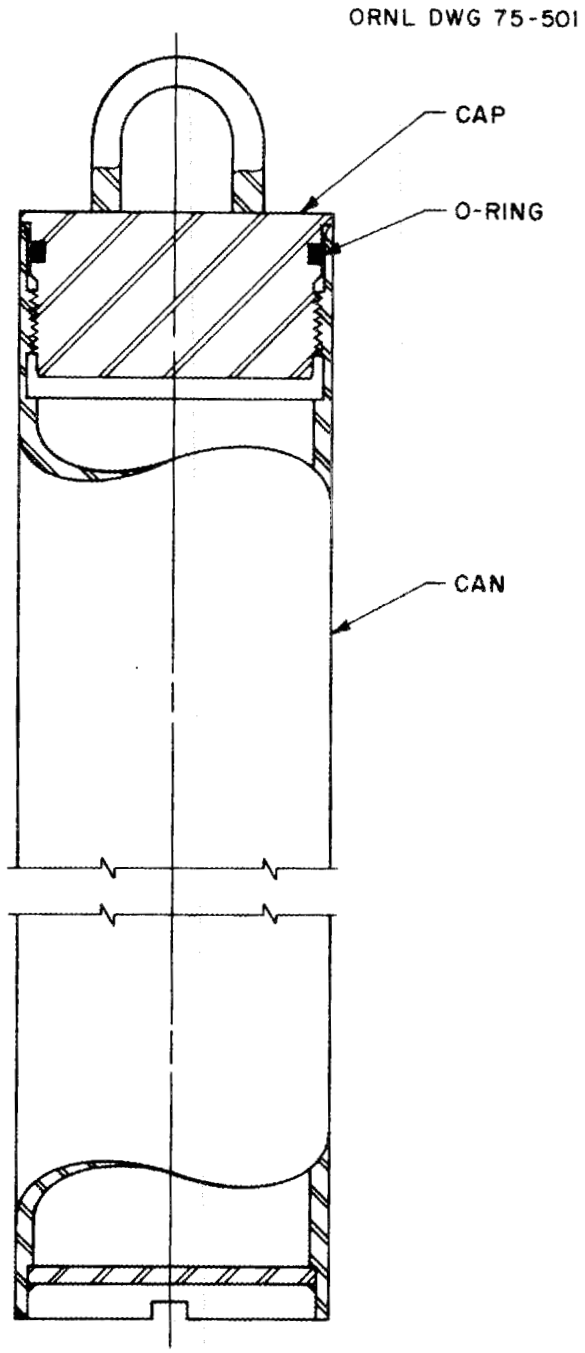

Fig. 1.52. Typical threaded 2R container.

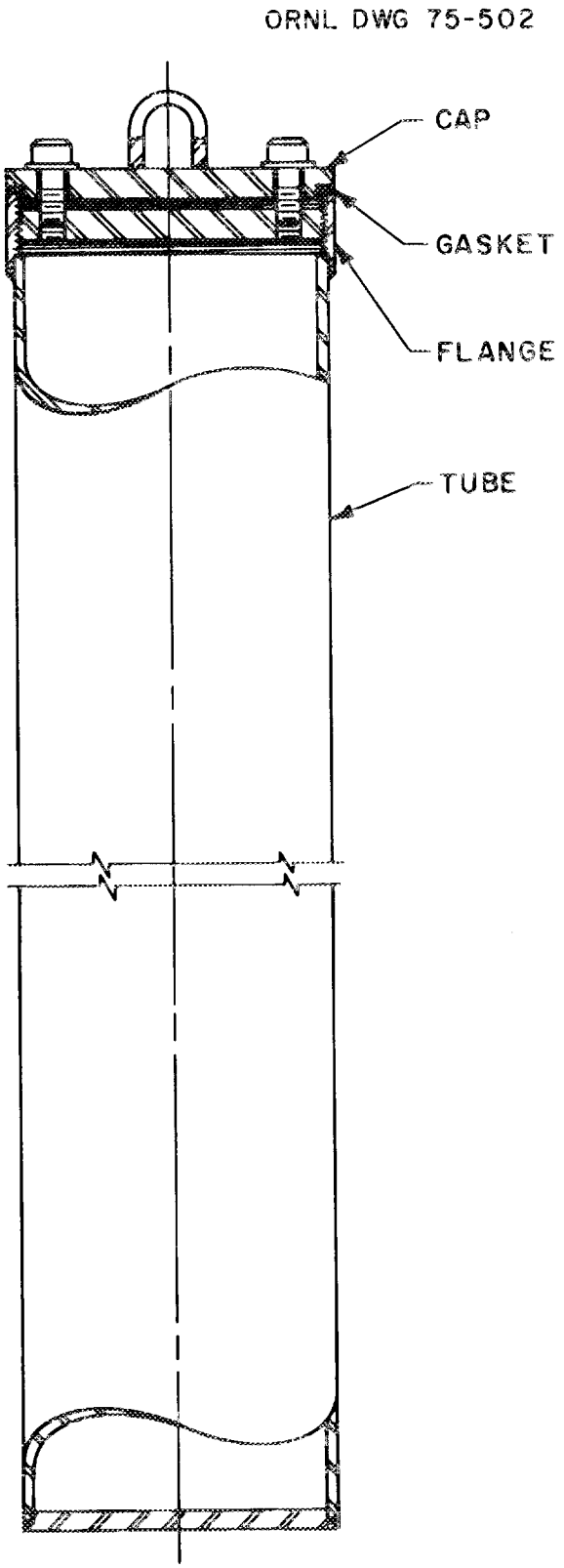

Fig. 1.53. Typical bolted 2R container.

where

t = wall thickness (in.),

r = radius of container (in.),

S = allowable stress = 10,300 psi,

E = joint efficiency = 1 for 2R containers.

Table 1.9. Dimension schedule for Specification 2R containers

Dimensions (in.) for symbols shown in Fig. 1.50					Bolt	
d	t_s	t_f	t_h	t_a	No.	Size
2	3/32	3/16	3/16	3/8	4	1/4-20
3	1/8	1/4	1/4	3/8	6	1/4-20
4	1/8	1/4	1/4	3/8	6	1/4-20
5	1/8	1/4	1/4	3/8	6	5/16-18
5 3/4	1/8	3/8	1/4	3/8	6	5/16-18

The applicable equation for determining the thickness of the top and bottom heads is Eq. (1) in paragraph UG 34:

$$t = d(Cp/S)^{1/2} , \tag{1.108}$$

where

d = diameter of head (in.),

C = factor dependent upon method of attachment used for head.

The stress in the bolts of bolted 2R containers resulting from internal pressure is given by the equation

$$\sigma_t = (pA)/(nA_s) = (p\pi d^2)/(4nA_s) , \tag{1.109}$$

where

p = internal gauge pressure (psi),

A = area of container lid exposed to internal pressure (in.^{2}),

n = number of bolts,

A_S = stress area of one bolt (in.^{2}),

d = diameter of container lid (in.).

The greatest stress on the 5/16-18 bolts (Table 1.9) will occur for the greatest value of d^2/nA_S. As indicated in Table 1.9, this will be when the diameter of the container lid is 5.75 in., the number of bolts is six, and the stress area of one 5/16-18 bolt is 0.0524 in.^{2}.[17] The resulting stress

$$\sigma_t = 20\pi(5.75)^2/4(6)(0.0524) = 1652 \text{ psi} .$$

The Specification 2R containers shipped in the ORNL loop transport cask are fabricated in accordance with ORNL Quality Assurance Procedures. Applicable approved ORNL procedures are used for welding, and all welds are inspected in accordance with approved ORNL weld inspection procedures. The bolting for the Specification 2R container is increased beyond that required for pressure tightness under the hypothetical accident conditions. Some dimensions of these containers are increased beyond the calculated values or those required by Specification 2R to facilitate fabrication. Silicone rubber gaskets or metallic gaskets made from metals with melting points higher than 800°F are used in 2R containers shipped in the ORNL loop transport cask.

2. THERMAL EVALUATION

The temperatures and internal pressures resulting from exposure of the ORNL loop transport cask to the prescribed heat conditions of normal transport and the thermal condition of the hypothetical accident are discussed in this section. The existing ORNL computer program HEATING-3,[18] modified to evaluate phase change of materials, was used to compute the temperature distribution in the cask and its contents under the specified

conditions. The thermal properties of the cask materials used in the temperature distribution computations are given in Table 2.1.

2.1 Thermal Evaluation for Normal Conditions of Transport

The ERDA regulations[2] stipulate that the shipping package be able to withstand direct sunlight at an ambient temperature of 130°F in still air without reducing the effectiveness of the packaging. For this case, the maximum permissible internal heat load of 1000 W was assumed. The regulations[3] set forth by DOT stipulate that the temperature of any accessible surface of the fully loaded shipping package in the shade in still air at an ambient temperature shall not exceed 122°F when the package is shipped by common carrier, and 180°F when the package is transported on a sole-use vehicle. For this case, ambient temperature was assumed to be 100°F, and internal decay-heat loads of 500 and 1000 W were assumed.

2.1.1 Thermal model

The model of the ORNL loop transport cask used in the computer heat transfer computations is illustrated in Fig. 2.1. The contents of the cask were modeled as a homogeneous cylinder with a nominal diameter of 5.5 in. and length of 66 in., physical properties of stainless steel, and decay heat distributed evenly throughout. For modeling purposes, it was assumed that radiation and conduction were the only modes of heat transfer across the internal air gaps. It is also assumed that the heat transfer is symmetric and the top is insulated. Since the wipers on the underside of the fire shield (Dwgs. M-11109-EL-020-E and EL-021-D in Appendix A) effectively curtail natural convection air loops, the heat transfer modes operating in the regions separating the cask from the fire shield may be considered to consist exclusively of radiation and conduction.

When the steady-state temperature distribution was computed for exposure of the cask to direct sunlight in still air at an ambient temperature of 130°F, it was assumed that a solar heat flux of 144 $Btu/hr \cdot ft^2$ was incident on the entire outer surface of the fire shield.

Table 2.1. Properties of cask materials used in thermal analyses

Material	Temperature (°F)	Thermal conductivity (Btu/hr·ft·°F)	Density (lb/in.^{3})	Heat capacity (Btu/lb·°F)	Latent heat (Btu/lb)
Lead[a,b]	0	21	0.41	0.031	
	617				10.6
	1000	14	0.29		
Steel[c]	0	8.3	0.29	0.12	
	2000	17			
Air[d]	0	0.013	0.00005	0.24	
	400	0.023			
	800	0.030			
	1200	0.037			
	1500	0.040	0.000017		
	2000	0.047			

[a]The thermal conductivity, density, and specific heat of lead were obtained from J. P. Holman, *Heat Transfer*, McGraw-Hill, New York, 1972.

[b]The latent heat of lead was obtained from W. M. Rohsenow et al., *Handbook of Heat Transfer*, McGraw-Hill, New York, 1973.

[c]The properties of mild steel (SAW 1020 carbon steel) were obtained from *A Compilation of Thermal Property Data for Computer Heat-Conduction Calculations*, UCRL-50589, Lawrence Radiation Laboratory.

[d]The properties of air were obtained from K. Kreith, *Principles of Heat Transfer*, International Textbook Company, Scranton, Pa., 1965.

ORNL DWG 75-2507

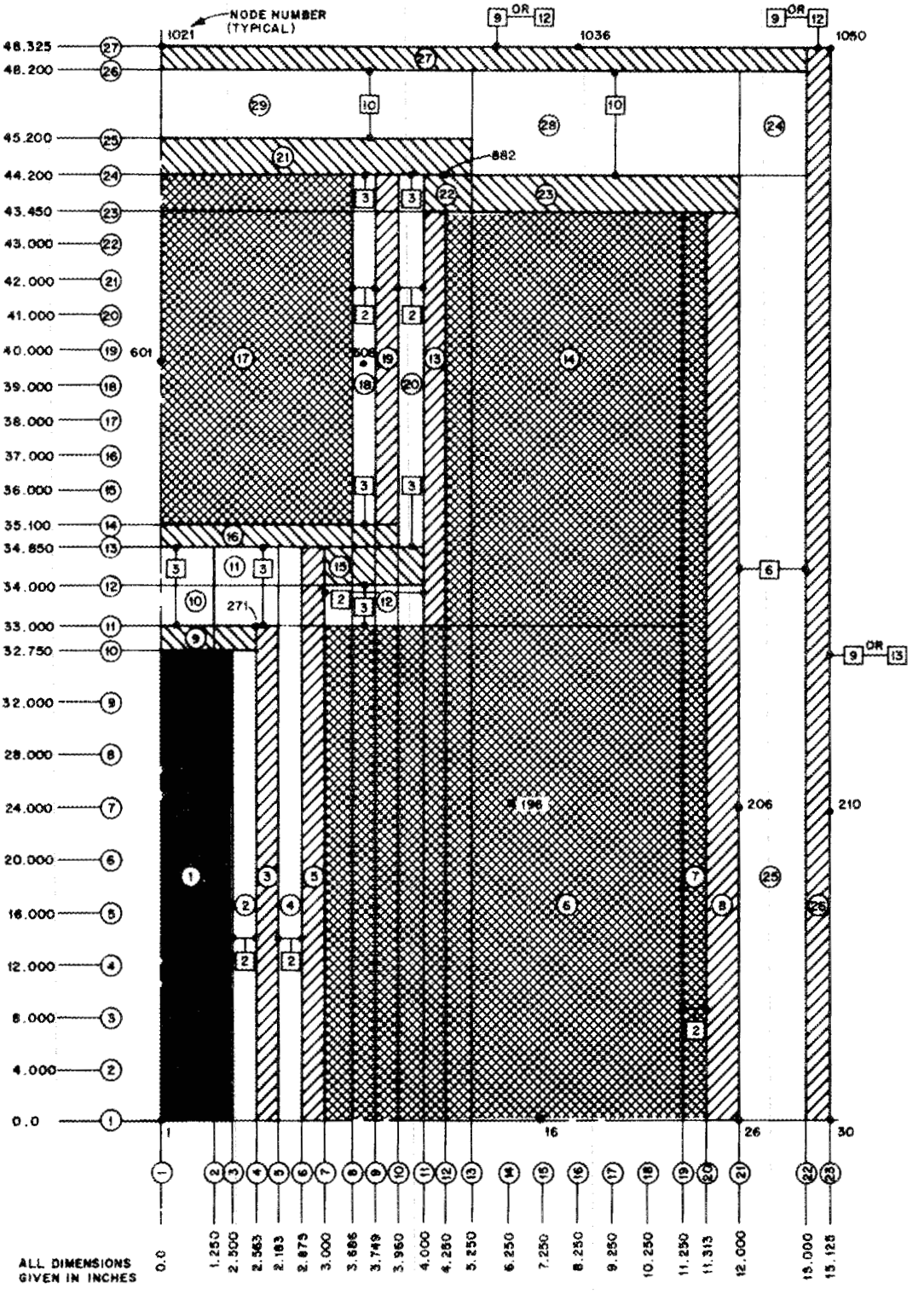

Fig. 2.1. Model of ORNL loop transport cask used in computer computations of temperature distribution for thermal analyses (x, ˙xx, ˙xxx, and ˙xxxx are node numbers).

The fraction of the incident solar flux absorbed by the cask would be equal to the absorptivity of the outer surface of the cask, and it was assumed that this absorptivity is 0.6, for which the net heat flux absorbed by the cask would be 86.4 Btu/hr·ft^2.

2.1.2 Maximum temperatures

Temperatures at points of interest throughout the ORNL loop transport cask resulting from its exposure to the prescribed heat conditions of normal transport are given in Table 2.2. The maximum temperature of any accessible surface of the cask in the shade in still air at an ambient temperature of 100°F was computed to be 120°F when the internal heat load of the cask was 500 W. This maximum temperature occurred at midpoint of the bottom of the cask and is less than the allowable temperature of 122°F for transport by common cask. With an internal heat load of 1000 W, the maximum temperature of any accessible surface of the cask was computed to be 140°F, which is less than the allowable temperature of 180°F for transport by a sole-use vehicle. The highest temperatures in the cask occurred when the internal heat load was 1000 W and the cask was subjected to direct sunlight in still air at an ambient temperature of 130°F. The maximum temperature of any accessible surface of the cask was computed to be 210°F.

The simplifying assumption that the contents of the ORNL loop transport cask consist of a homogeneous soil (Sect. 2.1.1) rather than an array of cylindrical rods results in a computed temperature at the centerline of the cask contents that is lower than the actual temperature would be. A correlation[27] for calculating a corrected centerline temperature for a triangular array of cylindrical rods is given by the following equation:

$$T_1 = [(K/\sigma')(Q_1/A_1) + (T_2)^4]^{0.25} , \qquad (2.1)$$

where

T_1 = temperature at the center of the cask contents (°R),

K = dimensionless constant from Fig. 19 of ref. 27 = 11,

σ' = 0.1714×10^{-9} Btu/hr·ft^2·°R,

Table 2.2. Temperatures computed for ORNL loop transport cask under normal conditions of transport

Node location[a]	Cask temperatures (°F) in		
	Shade at 100°F with internal heat load of		Direct sun at 130°F and 1000 W
	500 W	1000 W	
1	270	400	440
16	160	230	280
26	150	210	270
30	120	140	210
196	160	220	280
206	150	200	260
210	120	130	210
271	230	350	390
601	150	210	270
608	150	210	270
882	150	210	260
1036	120	140	210
1050	110	110	190

[a]See Fig. 2.1.

Q_1/A_1 = heat flux from one rod in the array (Btu/hr·ft^2),

T_2 = mean temperature of the 2R container resulting from exposure of the cask with an internal heat load of 1000 W to direct sunlight at an ambient temperature of 130°F (°R).

To provide conservative results, the maximum temperature of the 2R container was used at T_2 in Eq. (2.1). This temperature occurred at node 271 and was computed to be 390°F (850°R). Based on an array of thirty-seven 1/4-in.-diam rods, the area of one rod

$$A_1 = \pi dL = [\pi(0.25)(54.375)]/144 \tag{2.2}$$

$$= 0.2966 \text{ ft}^2 ,$$

and the heat rate of one rod

$$Q_1 = (1000\ \mathrm{W}/37\ \mathrm{rods})(3.413\ \mathrm{Btu/hr{\cdot}W}) \tag{2.3}$$

$$= 92.24\ \mathrm{Btu/hr{\cdot}rod}\ .$$

Thus the maximum temperature at the center of the cask contents

$$T_1 = [(11/0.1714 \times 10^{-8})(92.24/0.2966) + (850)^4]^{0.25}$$

$$= 1260°\mathrm{R} = 800°\mathrm{F}\ .$$

Neither a fuel element, experiment, nor special form cladding will fail at this temperature. It is below the melting-point temperature of cladding material.

2.1.3 Minimum temperatures

The regulations set forth by DOT require that the cask be able to withstand an ambient temperature of -40°F in still air and shade. As discussed in Sect. 1.5.2, no reasons were found to indicate that the effectiveness of the ORNL loop transport cask would be reduced by exposure to the stipulated minimum temperature.

2.1.4 Maximum internal pressures

The pressure in the internal air gaps of the cask will increase as a result of exposure of the ORNL loop transport cask to the heat conditions of normal transport. The pressures resulting from exposure of the cask to the maximum heat condition of normal transport were estimated by using the ideal relationship of the perfect-gas laws exemplified in Eq. (2.4):

$$p_2 = p_1(T_2/T_1)\ . \tag{2.4}$$

The assumptions made for these estimates included a constant volume, a cask sealing temperature (T_1) of 70°F (530°R), and a sealing pressure (p_1) of 14.7 psia. The elevated gas temperatures (T_2) used were average temperatures obtained from the computer output. For air trapped in the inner container of the cask, the resulting pressure

$$p_2 = 14.7(440 + 460)/530 = 25 \text{ psia} = 10.3 \text{ psig} .$$

The resulting pressure of the air trapped in the cask cavity

$$p_2 = 14.7(320 + 460)/530 = 21.6 \text{ psia} = 6.9 \text{ psig} .$$

The pressure of the air trapped in the shielding plug cavity

$$p_2 = 14.7(270 + 460)/530 = 20.3 \text{ psia} = 5.6 \text{ psig} ,$$

and the resulting pressure of the air trapped in the lead cavity

$$p_2 = 14.7(280 + 460)530 = 20.5 \text{ psia} = 5.8 \text{ psig} .$$

These internal pressures resulted from exposure of the ORNL loop transport cask, with an internal heat load of 1000 W, to direct sunlight in still air at an ambient temperature of 130°F.

2.2 Thermal Hypothetical Accident Evaluation

The third in the sequence of hypothetical accident conditions to which a package used for shipment of fissile or a large quantity of radioactive material must be subjected is exposure for 30 min within a source of radiant heat having a temperature of 1475°F and an emissivity coefficient of 0.9 equivalent. For calculational purposes, it shall be assumed that the package has an absorption coefficient of 0.8. The package shall not be cooled artificially until 3 hr after the 30-min test period has expired and the temperature at the center of the package has begun to fall, unless it can be shown that the temperature at the

center of the package has begun to fall in less than 3 hr. Damage from the free-drop and puncture conditions of the hypothetical accident is not expected to affect the thermal performance of the container adversely.

2.2.1 Thermal model

The effects of the thermal hypothetical accident condition were analyzed by using the same geometric model of the ORNL loop transport cask in a HEATING-3 computer calculation that was used to analyze the effects of the heat condition of normal transport. This model, described in Sect. 2.1.1, was used to determine the temperature distribution within the cask during the 30-min thermal exposure and the postexposure cooldown period. The steady-state temperature distribution resulting from exposure of the cask to the normal condition of an ambient temperature of 100°F with an internal heat load of 1000 W was used as the starting point for the accident condition computations. The boundary condition parameters were adjusted to encompass exposure of the cask fire shield to the radiant heat temperature of 1475°F for a 30-min period. The surface convection parameters were also adjusted during the postexposure time period to account for the elevated surface temperature. The postexposure period was considered over a long enough period to allow all cask temperatures to begin decreasing with time. No special cooling was assumed, only normal radiation and natural convection transfer to the 100°F environment.

2.2.2 Maximum temperatures

The temperature-time history of several points of interest resulting from exposure of the ORNL loop transport cask to the thermal accident condition is shown in Fig. 2.2. The locations of these points are illustrated in Fig. 2.1.

After the cask had been allowed to cool for 10 min, the calculated temperature at its centerline was 420°F, while the maximum temperature within the cask was calculated to be 590°F. The maximum temperature of the primary seal was calculated to be 410°F. Since these temperatures would not result in harmful effects, the transient computations were stopped at this point during the cooldown period.

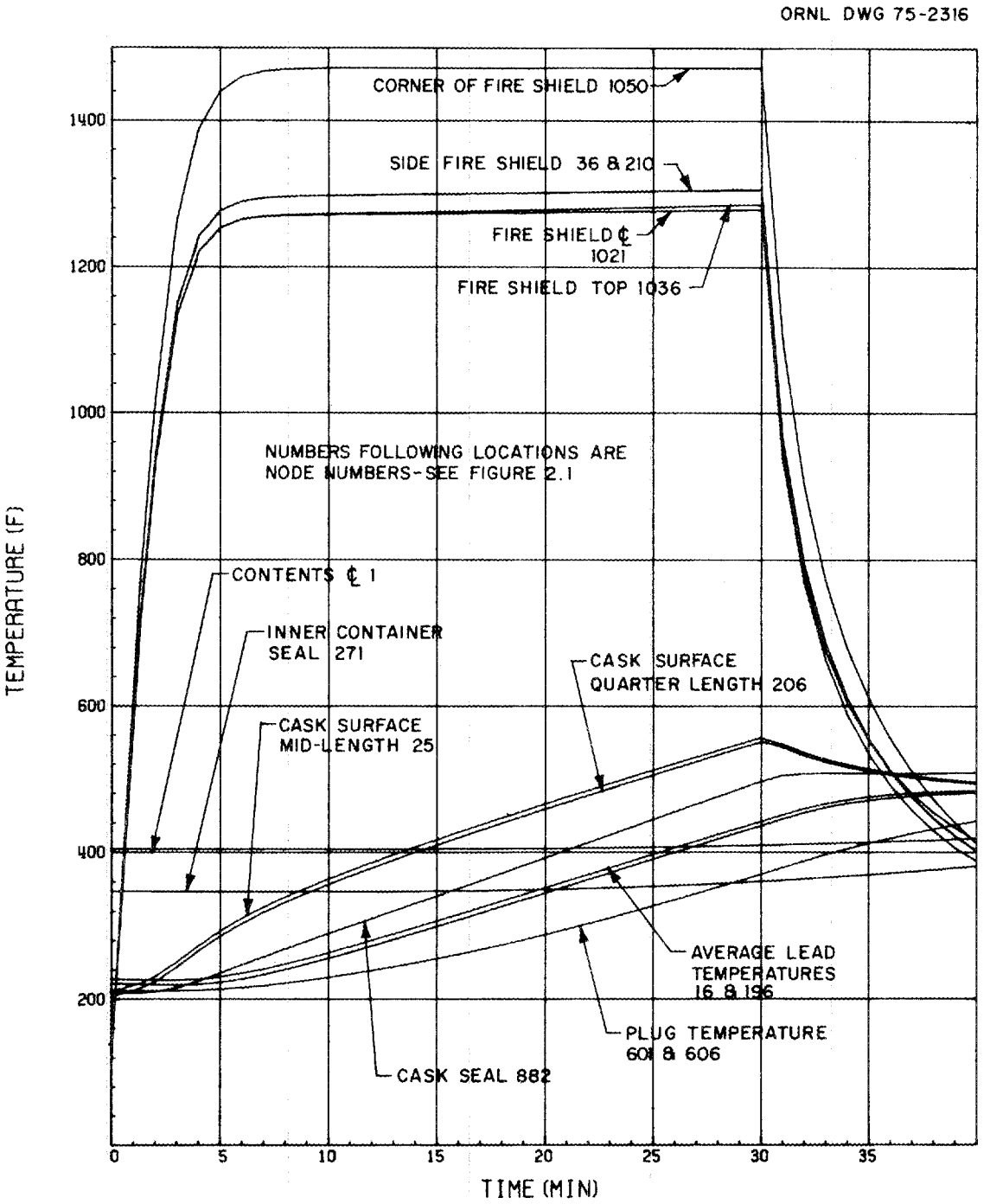

Fig. 2.2. Temperature-time history of ORNL loop transport cask resulting from exposure to thermal accident condition (location of node numbers illustrated in Fig. 2.1).

2.2.3 Maximum pressures

The pressure increase within the cask cavity resulting from exposure to the thermal accident condition cannot be calculated precisely, since it was predicted that the secondary cask seal would fail. Such a seal could fail over a broad range of temperatures, and the maximum temperature at failure was assumed to be the maximum temperature within the cask cavity. The resulting pressure increase was calculated by using Eq. (2.4) and the same assumptions made to calculate the pressure increases resulting from exposure of the ORNL loop transport cask to the heat condition of normal transport (discussed in Sect. 2.1.4). The elevated temperatures (T_2) used in these computations were average temperatures obtained from the computer output. The resulting pressure (p_2) of air trapped within the cask cavity

$$p_2 = p_1(T_2/T_1) \tag{2.5}$$

$$= 14.7(870)/530$$

$$= 24.1 \text{ psia} = 9.4 \text{ psig} ,$$

and the resulting pressure within the cask inner container

$$p_2 = 14.7(860)/530 = 23.9 \text{ psia} = 9.2 \text{ psig} .$$

2.2.4 Damage assessment

Exposure of the ORNL loop transport cask to the thermal condition of the hypothetical accident will not result in a loss of primary containment. However, the secondary seals will fail as a result of the high temperatures; and secondary coolant (air), which is not contaminated, will be released. As illustrated in Fig. 2.3, a portion of the lead within the cask will melt, and the consequence of this potential shielding loss is discussed in Sect. 4. The deflection of the steel outer shell of the cask resulting from expansion of the lead was discussed in Sect. 1.6.3.1. It was concluded that exposure of the ORNL

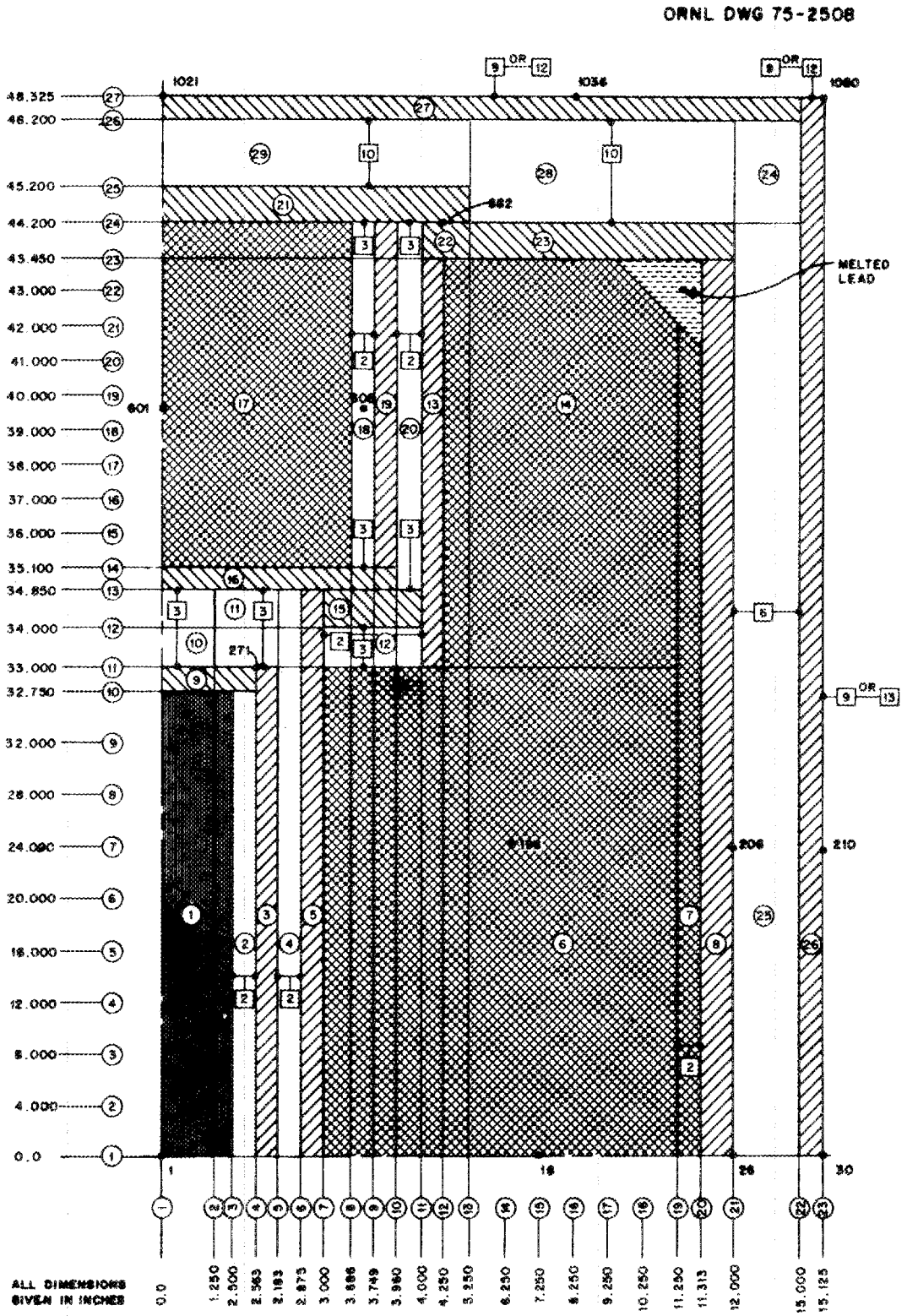

Fig. 2.3. Lead melt resulting from exposure of ORNL loop transport cask to thermal condition of hypothetical accident.

loop transport cask to the thermal condition of the hypothetical accident will not result in a loss of containment, radiation doses in excess of those allowed by the regulations, or catastrophic failure of the cask shell.

3. CONTAINMENT

The regulations[1-3] require that packages in which fissile or large quantities of radioactive materials are shipped must maintain containment of radioactive contents under the stipulated normal and accident conditions of transport. The containment boundaries and capabilities of the ORNL loop transport cask are discussed in this section.

3.1. Containment Boundaries

The containment boundaries for the shipping options available with the ORNL loop transport cask are described in the following paragraphs.

3.1.1 Secondary containment

The cask cavity and the gasketed access plugs form the secondary containment boundary for all shipments with the ORNL loop transport cask. This containment boundary is pressure tested in accordance with the procedures set forth in Appendix E.

3.1.2 Primary containment

The fuel element cladding or experiment shells that served as a containment boundary in the reactor during irradiation can also serve as the primary containment for shipments. However, if it is known or suspected that the containment boundary has been breached, the item to be shipped is enclosed in a Specification 2R[4] container.

For shipments of special form materials, the primary containment boundary is formed by the welded encapsulation. A typical special form encapsulation is illustrated in Fig. 1.49 (Sect. 1.7). If the material to be shipped is enclosed in a double encapsulation, the outer welded capsule forms the secondary containment boundary. These lines of

containment are leak checked routinely by using mass spectrometer or leak detection techniques with an elevated-temperature solution-immersion bubble. Irradiated metal specimens that conform to the requirements for special form materials are sometimes shipped in the ORNL loop transport cask. These specimens do not have transferable surface contamination in excess of allowable limits, and they therefore do not require a primary containment vessel.

All other materials which do not conform to the requirements for special form materials are placed in Specification 2R containers, which form the primary containment boundary, for shipment. Typical examples of the 2R containers used at ORNL are illustrated in Figs. 1.50 through 1.53 (Sect. 1.8). These containers are designed to be leak-tight to the extent that water will not leak from them at the anticipated maximum temperature and pressure. The container illustrated in Fig. 1.51 is designed for leak checking and will be leak-tight to the extent that leaks cannot be detected by using pressure-drop-over-time techniques. All powders and other dispersible materials are shipped in 2R containers that are leak checked, while solids, such as metal specimens, etc., can be shipped in containers that are not designed for leak checking.

3.2 Requirements for Normal Conditions of Transport

The Specification 2R containers are designed (Sect. 1.8) to withstand temperatures and pressures in excess of those encountered during normal transport. Thus, no release of radioactive material and no loss or contamination of coolant will result from exposure of the inner 2R containers to the normal conditions of transport. The test sequence for special form materials is more severe than the normal conditions of transport, and no release of radioactive materials is expected to result from exposure of those containment vessels to the normal conditions of transport. The resulting pressure increases will be less than those experienced in the thermal test for special form materials, and there will be no loss or contamination of coolant (air).

Exposure of the ORNL loop transport cask to the normal conditions of transport will not result in a loss of secondary containment. The

pressure increase in the cask cavity will not be in excess of the allowable pressure, and the temperatures encountered will be within the operating limits of the materials forming the boundary of secondary containment.

3.3 Requirements for Accident Conditions

It has been concluded that secondary containment will be lost as a result of exposure of the ORNL loop transport cask to the hypothetical accident conditions. The free-drop condition of the hypothetical accident would result in failure of mechanical seals and possibly in the rupture of welds in the secondary containment. Exposure of the cask to the thermal condition of the hypothetical accident would result in decomposition of closure gaskets. Despite the loss of secondary containment it has been concluded that primary containment of radioactive materials will be maintained during and after exposure of the cask to the hypothetical accident conditions.

3.3.1 Special form materials

The test series for special form materials demonstrates that the encapsulation around these materials will not fail or leak contents as a result of the specified free drops. The thermal test stipulated for special form materials results in temperatures in excess of those computed for the cask contents during and after exposure to the thermal condition of the hypothetical accident (Sect. 2). The water immersion test for special form materials is identical to that for the hypothetical accident. It was therefore concluded that if special form materials are shipped in the ORNL loop transport cask, primary containment will be maintained during and after exposure of the cask to the conditions of the hypothetical accident.

3.3.2 Inner containers

Specification 2R containers[4] are used extensively at ORNL in conjunction with various shielded casks for the shipment of radioactive materials. The design standards for these containers are discussed in

Sect. 1.8. The design pressure and temperature of the 2R containers were not exceeded during or after exposure of the ORNL loop transport cask to the thermal condition of the hypothetical accident. The computed temperature of the inner container primary seal did not reach 410°F (Fig. 2.2), and data published by the Parker Seal Company[19] indicate that these silicone rubber gaskets have a maximum service temperature of 450°F. It was therefore concluded that primary containment afforded by inner 2R containers would not be lost as a result of exposure of the ORNL loop transport cask to the thermal condition of the hypothetical accident. The tests outlined in Sect. 3.3.3 were conducted to demonstrate the ability of 2R containers to maintain their integrity and containment ability after the 30-ft free drop and subsequent impact.

3.3.3 Inner container drop test

On August 21, 1974, two Sepcification 2R containers were drop tested at ORNL to establish the adequacy of this type of inner container as the primary containment vessel for radioactive materials. These containers are illustrated in Fig. 3.1. The 2R containers are normally assembled by using forged caps for both end closures, and one cap is often welded to the pipe to enhance structural integrity. Both mild steel and stainless steel pipe and caps have been used for 2R containers.

For the drop tests described here, cast steel (malleable) caps were used at one end of the containers because of a temporary shortage of forged caps. In each of the drop tests, the forged cap was nearest the point of impact. The cast cap was not considered a part of the test except to facilitate leak testing. Both containers were soap-bubble leak tested with air at a pressure of 10 psig prior to impact testing, and there were no detectable leaks.

The first container tested was filled with tap water, placed in an existing casing, as illustrated in Fig. 3.2, and dropped through a distance of 30 ft to impact on the ORNL test pad at an angle of approximately 17.3°. The angle of impact was calculated from the dimensions of the casing deformation. The casing was used to simulate the protection afforded by the cask. The second container was also filled with tap

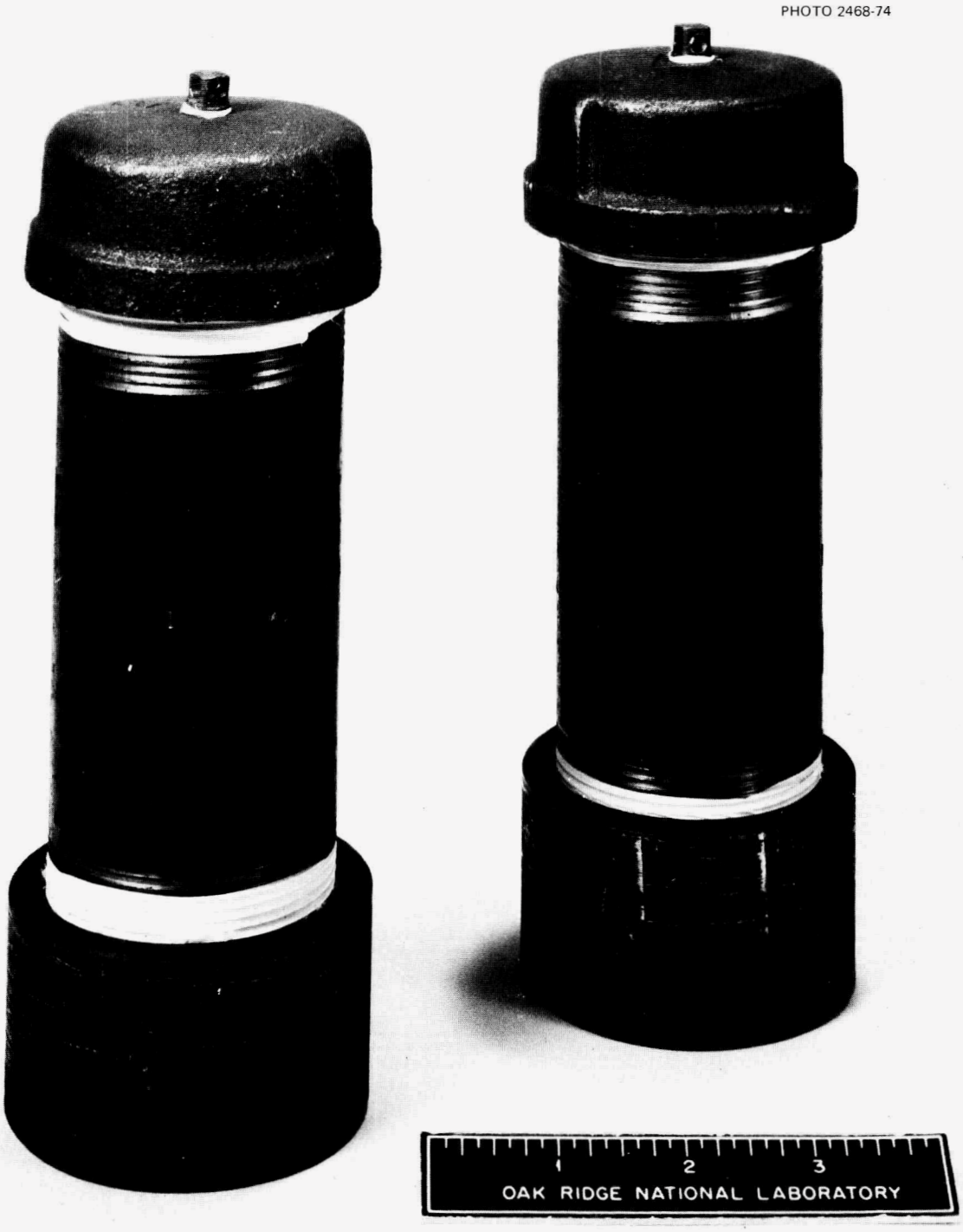

Fig. 3.1. Specification 2R containers used in drop tests.

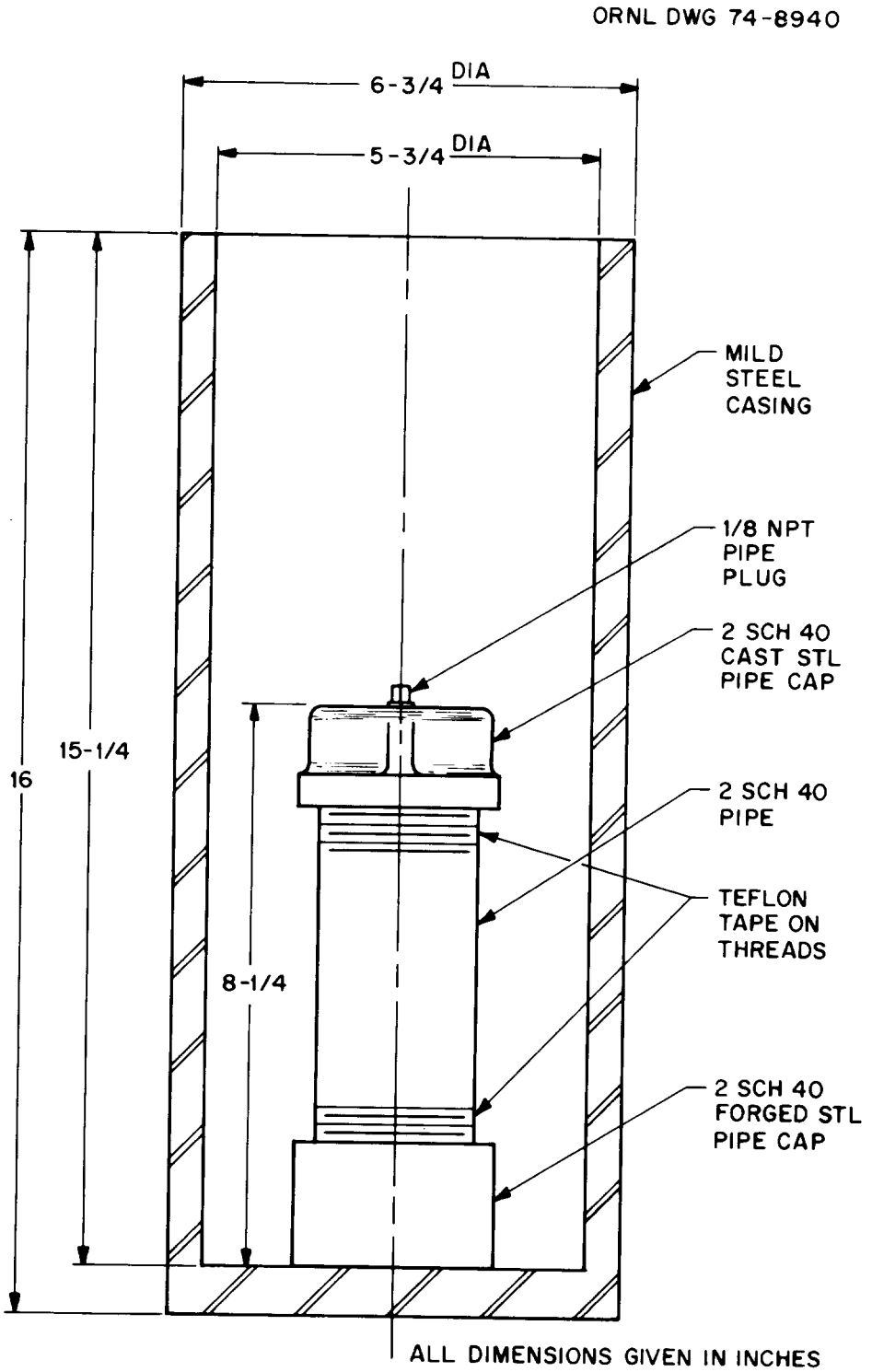

Fig. 3.2. Specification 2R container inside steel casing for drop test.

water, placed in the casing, and dropped to impact on its end. The containers were drained and soap-bubble tested at a pressure of 10 psig, and no leaks were detected.

Both containers were then refilled with water, and the first container was dropped through a distance of 30 ft onto the test pad without any outer protection. The container impacted at a very flat, oblique angle. Although no leakage of water was observed, there were significant leaks at both threaded joints when the container was air-soap-bubble tested at a pressure of 10 psig. The second container was also dropped without any outer protection so that the plane containing the point of impact and the center of gravity was essentially vertical. Again, there was no visible loss of water from the container, but the air-soap-bubble test at a pressure of 10 psig revealed significant leakage around the lower (nearest to the point of impact) threaded joint.

It was therefore concluded that a Specification 2R container made of threaded stainless or carbon-steel pipe and stainless steel or forged steel caps is adequate to provide primary containment when inside a shipping cask. It was also concluded that such a container is not adequate without some external protection. It is obvious that the accelerations experienced by the test containers within the steel casing were of greater magnitude than would actually be experienced by an inner 2R container in a shipping cask subjected to the 30-ft free-drop condition.

Two inner 2R containers similar to the containers used with the ORNL loop transport cask were drop tested by members of the ORNL Chemical Technology Division to establish their containment capability. The results of these tests, which are given in Appendix D, indicated that the containers were capable of maintaining containment of their contents after being subjected to a 30-ft free drop and impact.

4. SHIELDING

The regulations[2,3] governing the shipment of radioactive and fissile materials specify maximum permissible radiation dose rates for both normal and accident conditions of transport. These permissible rates and how they are met by the ORNL loop transport cask are discussed in the following subsections.

4.1 Normal Conditions

For normal conditions of transport, the regulations stipulate that the dose rate at the surface of the package is not to exceed 200 millirems/hr. Also, the transport index is not to exceed 10. This limits the dose rate at 3 ft from the surface of the package to 10 millirems/hr.

The biological shielding for the ORNL loop transport cask is formed by a minimum thickness of 8.3 in. of lead and 0.805 in. of carbon steel and stainless steel. After loading but prior to removal from the loading area, the cask is surveyed for conformance to dose rate requirements, as outlined in the operating procedures (given in Appendix E). This calculation of dose rates to show compliance with the requirements for normal conditions of transport is not necessary.

4.2 Accident Conditions

For the stipulated accident conditions of transport, the regulations require that any reduction in package shielding not be sufficient to increase the external radiation dose rate to more than 1000 millirems/hr at a distance of 3 ft from the outside surface of the package.

The 30-ft free drop and impact of the ORNL loop transport cask would result in some local reduction of shielding effectiveness, as discussed in Sect. 1.6.1. These reductions are illustrated in Figs. 1.34, 1.35, 1.40, and 1.46. The most significant reduction in shielding results from the side impact, and the effective thickness of the lead (d) following the side impact is approximately 7.0 in. However, the calculations presented herein demonstrate that the dose rate will not be increased beyond the limit allowed by the regulations.

Exposure of the ORNL loop transport cask to the stipulated thermal conditions could result in a reduction of shielding effectiveness if the outer shell of the cask were to rupture and the molten lead were lost. Since rupture of the shell was deemed credible because of the unknown quality of the welds, it was assumed for the accident condition shielding evaluation that all of the lead which melts will be lost.

It can be conservatively assumed that all of the photon energy of the cask contents (source) will be converted to heat. If it is further assumed that the source decays by the liberation of one 1-MeV photon per disintegration, the photon source that will produce 1000 W of heat (the cask limit) is given as follows:

$$1000\ \mathrm{W}[(1\ \mathrm{MeV/sec})/(1.60206 \times 10^{-13})](1\ \mathrm{photon}/1\ \mathrm{MeV}) = 6.24 \times 10^{15}\ \mathrm{photons/sec}\ .$$

It should be noted here that no neutron sources will be transported in the ORNL loop transport cask.

The simple shielding model shown in Fig. 4.1 was used in the dose rate calculations for the ORNL loop transport cask. Assumption of a line source and slab shield, as illustrated in Fig. 4.1, permits calculation of the flux (ϕ) at the dose point by using the following expression:[28]

$$\phi = (S_L/2\pi a)[AF(\theta,b_1) + (1 - A)F(\theta,b_2)]\ , \qquad (4.1)$$

where

S_L = photon source per unit length,

a = distance from line source to dose point,

A = coefficient in two-term exponential expression for buildup factor (B),

$F(\theta,b)$ = geometric function.

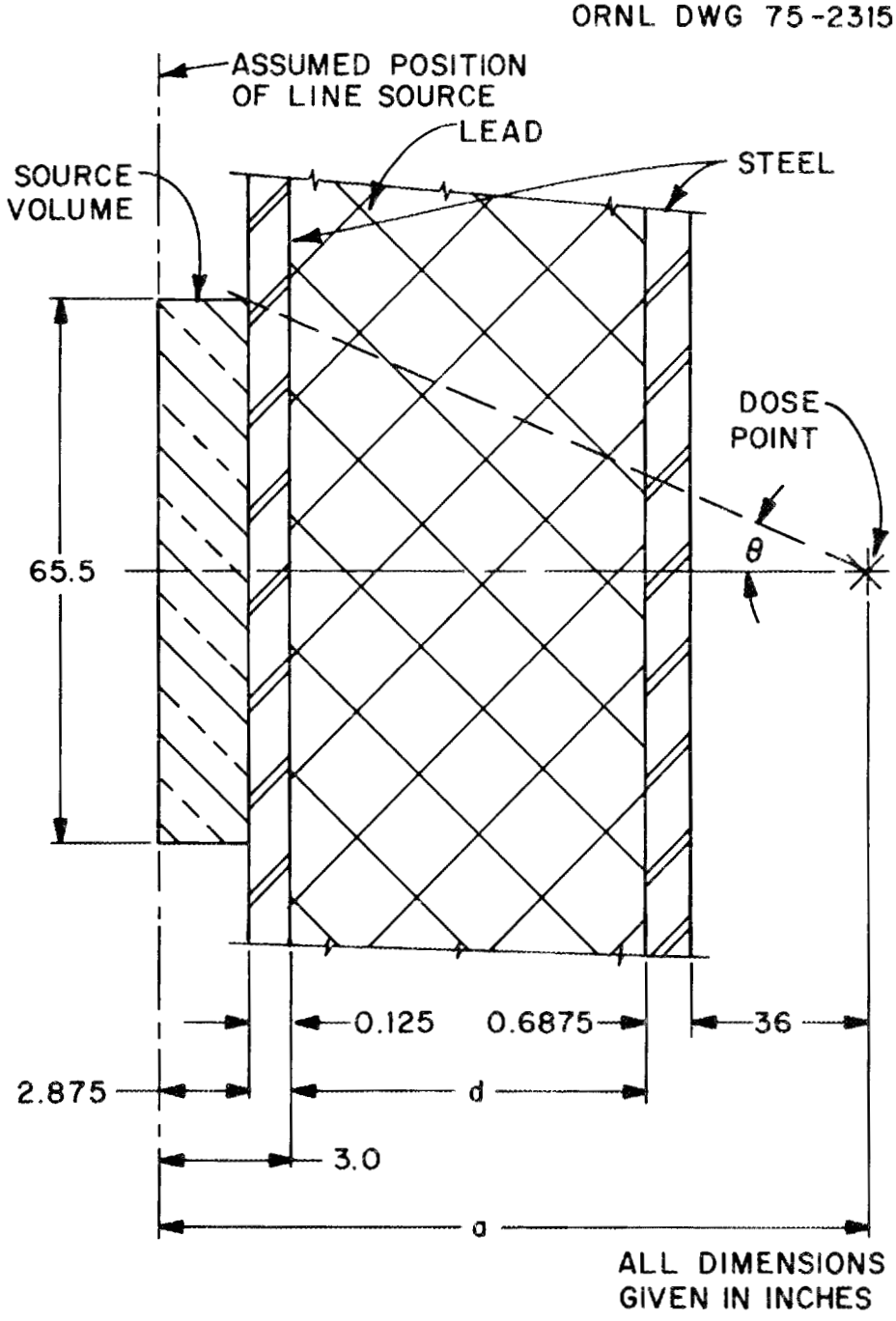

Fig. 4.1. Shielding model used in dose rate calculations for ORNL loop transport cask.

The buildup factor

$$B = Ae^{-\mu\alpha t} + (1 - A)e^{-\mu\beta t} , \tag{4.2}$$

where

μ = linear attenuation coefficient for the shield material,

t = thickness of the shield material,

$\alpha S\beta$ = exponential coefficients determined experimentally.

Buildup in the steel of the cask was neglected, and no shielding credit was taken for the steel layers since they are thin. For 1-MeV photons in lead, the following values were used:[29]

$A = 2.45$,

$\mu = 0.776\ cm^{-1}$,

$\alpha = -0.045$,

$\beta = 0.178$.

The geometric function $F(\theta,b)$ is given by the equation

$$\int_0^{\theta} e^{-b} \sec \theta' \, d\theta' , \tag{4.3}$$

where

θ = angle shown in Fig. 4.1,

$b_1 = \mu_1' t$,

$\mu_1' = \mu(1 + \alpha)$,

$b_2 = \mu_2' t$,

$\mu_2' = \mu(1 + \beta)$.

The F functions are available in graphical form in ref. 28.

To calculate the dose rate at a point 3 ft from the point of side impact, the photon source per unit length

$$S_L = (6.24 \times 10^{15} \text{ photons/sec})/[65.5 \text{ in.}(2.54 \text{ cm/in.})]$$

$$= 3.75 \times 10^{13} \text{ photons/cm·sec} .$$

The distance from the line source to the dose point

$$a = 3 + 6.9 + 0.6875 + 36$$

$$= 46.59 \text{ in.} = 118.34 \text{ cm.}$$

The thickness of the shield material

$$t = 7 \text{ in.} = 17.78 \text{ cm} .$$

The angle

$$\theta = \tan^{-1}(65.5 \text{ in.}/2)/a = 35° .$$

For the geometric functions,

$$\mu_1' = \mu(1 + \alpha) = 0.776(1 - 0.045) = 0.74 ,$$

$$b_1 = \mu_1' t = 0.74(17.78) = 13.16 ,$$

$$\mu_2' = \mu(1 + \beta) = 0.776(1 + 0.178) = 0.91 ,$$

$$b_2 = \mu_2' t = 0.91(17.78) = 16.18 .$$

From ref. 28,

$$F(\theta,b_1) = F(35°, 13.16) \cong 7.2 \times 10^{-7} ,$$

$$F(\theta,b_2) = F(35°, 16.18) \cong 3.3 \times 10^{-8} .$$

Substitution of these values in Eq. (4.1) yields

$$\phi = [(3.75 \times 10^{13})/2\pi(118.34)][2.45(7.2 \times 10^{-7}) - 1.45(3.3 \times 10^{-8})]$$

$$= 8.66 \times 10^{4} \text{ photons/cm}^2\cdot\text{sec} .$$

To convert this flux to a dose rate, a conversion factor for 1-MeV photons[28] is

$$(2 \times 10^{-3} \text{ mR/hr})/(\text{photons/cm}^2\cdot\text{sec}) .$$

A dose rate of gamma radiation of 1 R/hr is approximately equivalent to a dose rate of 1 rem/hr, since the relative biological effectiveness for gamma radiation is unity. Thus the dose rate (D) at 3 ft is

$$D = (8.66 \times 10^{4})(2 \times 10^{-3}) = 173 \text{ millirems/hr} .$$

This dose rate is much less than the allowed postaccident dose rate of 1000 millirems/hr. Thus the ORNL loop transport cask is expected to provide adequate radiation shielding following any of the accidents stipulated by the regulations.

5. CRITICALITY

The regulations require that a Fissile Class I package be so designed and constructed and its contents so limited that any number of such undamaged packages would be subcritical in any arrangement, and 250 such packages would be subcritical in any arrangement if each package were subjected to the sequence of the hypothetical accident conditions. Immersion in water must be considered.

The ORNL loop transport cask was approved by the ORNL Criticality Committee (Appendix F) for a maximum loading of 1250 g of fissile isotopes (combinations of ^{235}U, ^{233}U, and plutonium), with the stipulation that if the mass loading exceeds 800 g of fissile isotopes, the material will be so arranged that the fissile loading will not exceed

250 g per linear foot under normal and accident conditions (Appendix F). This requirement restricts the contents to a safe mass per foot for infinitely long water-reflected cylinders and ensures safety during loading and unloading underwater. The overall mass limit of 1250 g of fissile isotopes and the 5-3/4-in. inside diameter render the cask safe against redistribution of the contents in an accident. The contained fissile material shall be unmoderated. Also, as shown in the structural analysis, the contents will remain inside the cavity during and after exposure of the cask to the hypothetical accident conditions, the cask will not be effectively changed in dimensions, and it can be concluded that any number of such casks in any arrangement would remain subcritical.

6. QUALITY ASSURANCE

The regulations[1,2] require packaging to be designed, fabricated, and operated in compliance with an established formal quality assurance program. Compliance with this requirement is discussed in this section.

6.1 Fabrication, Inspection, and Acceptance Tests

The fabrication work on the ORNL loop transport cask was performed prior to the requirements for a formal quality assurance program. The fabrication was performed in ORNL Shops in accordance with normal shop fabrication procedures. Material was specified on the original drawings as "HR STL," any 300-series stainless steel, and lead. There are no inspection reports or material certifications in existence except as outlined below.

Minor revisions to the ORNL loop transport cask will be made as a result of the analysis techniques used in this report. These revisions will be completed after this report is approved. The modifications will be done in accordance with ORNL Q.A. Procedures, and will be inspected, and the inspection report will become part of the cask's permanent QA file.

Special form materials are fabricated to conform to the requirements of the regulations, as discussed in Sect. 1.7. Each encapsulation is leak checked by using appropriate methods. Cladding for fuel elements

and experiments is fabricated in accordance with established procedures, and this cladding is leak checked routinely.

The Specification 2R inner containers are designed as discussed in Sect. 1.8 and fabricated in accordance with ORNL or equivalent quality assurance procedures. Welds are made by qualified welders and inspected appropriately. Material is purchased in accordance with ASTM or ASME specifications. The completed inner containers are inspected for conformance to fabrication drawings, and they are pressure tested as specified by the designer. Reusable inner containers are inspected prior to each use.

6.2 Operating Procedures and Routine Inspection

Operating and routine inspection procedures and standard checklists to ensure that all shipments are safe and comply with the regulations[1-3] have been prepared and are followed by the ORNL Operations Division. Copies of the procedures and the checklists are presented in Appendix E. When the ORNL loop transport cask is loaned to other organizations, copies of these procedures and checklists are forwarded to that organization.

6.3 Periodic Maintenance and Inspection

Annual inspections of the ORNL loop transport cask are performed by personnel of Hot Cell Operations and Inspection Engineering, and an inspection is performed at the time of each shipment by operating personnel in accordance with the procedures in Appendix E. Upon return to ORNL, the cask is again visually inspected to ensure that it is in good repair. Maintenance is required only when an inspection indicates damage.

REFERENCES

1. *Code of Federal Regulations,* Title 10, Part 71, "Transport of Licensed Materials."

2. *United States Atomic Energy Commission Manual,* vol. 0000, General Administration, Part 0500, Health and Safety, Chapter 0529, "Safety Standards for the Packaging of Radioactive or Fissile Materials," 1973.

3. *Code of Federal Regulations,* Title 49, Part 173, "Transportation."

4. *Code of Federal Regulations,* Title 49, Part 178, "Transportation."

5. *Mechanical and Physical Properties of Austenitic Chromium Nickel Stainless Steels at Ambient Temperature,* International Nickel Company, 1963.

6. *Machine Design — The Ferrous Metals Book,* Penton, Cleveland, Ohio, 1961.

7. *Manual of Steel Construction,* American Institute of Steel Construction, New York, 1970.

8. J. H. Evans, *Structural Analysis of Shipping Casks, Vol. 8, Experimental Study of the Stress-Strain Properties of Lead under Specified Impact Conditions,* ORNL/TM-1312 (August 1970).

9. L. B. Shappert et al., *A Guide for the Design, Fabrication, and Operation of Shipping Casks for Nuclear Applications,* ORNL/NSIC-68 (February 1970).

10. D. S. Clark, *The Influence of Impact Velocity on the Tensile Characteristics of Some Aircraft Metals and Alloys,* National Advisory Committee for Aeronautics, Technical Note 868, Washington, D.C., October 1942.

11. J. H. Evans, "Experimental Study of the Stress-Strain Properties of Cask Materials under Specified Impact Conditions," pp. 232-43 in *Proceedings of the 4th International Symposium on Packaging and Transportation of Radioactive Materials,* September 22-27, 1974, Miami Beach, Florida, CONF-740901-P1.

12. D. D. Cannon, *Structural Analysis of Shipping Casks, Vol. 12, Energy Absorption Characteristics of Stainless Steel Bolts under Impact Loading,* ORNL/TM-1312 (May 1972).

13. J. H. Faupel, *Engineering Design, a Synthesis of Stress Analysis and Materials Engineering,* Wiley, New York, 1964.

14. S. Timoshenko, *Strength of Materials, Part II, Advanced Theory and Problems,* 3d ed., Van Nostrand, Princeton, New Jersey, 1956.

15. F. L. Singer, *Strength of Materials,* 2d ed., Harper and Row, New York, 1962.

16. R. J. Roark, *Formulas for Stress and Strain,* 4th ed., McGraw-Hill, New York, 1965.

17. E. Oberg and F. D. Jones, *Machinery's Handbook,* 17th ed., Industrial Press, New York, 1964.

18. W. D. Turner and M. Siman-Tov, *HEATING-3, an IBM 360 Heat Conduction Program,* ORNL/TM-3208 (February 1971).

19. *Seal Compound Manual,* Catalog C5702, Parker Seal Company, Cleveland, Ohio (April 1971).

20. I. A. Swanson, *FEATS: A Computer Program for the Finite Element Thermal Stress Analysis of Plane or Axisymmetric Solids,* Westinghouse Electric Corporation Report WANL-TME-1888, Westinghouse Astro-Nuclear Laboratory, Pittsburgh, Pennsylvania (1968).

21. J. H. Evans, *Structural Analysis of Shipping Casks, Vol. 13, CEIR: A FORTRAN Program for Estimation of Response of Cylindrical Lead-Shielded Casks to End Impacts,* ORNL/TM-1312 (June 1974).

22. L. B. Shappert and J. H. Evans, *The Obsolete Cask Program: Initial Tests,* ORNL/TM-1312, vol. 14 (November 1974).

23. F. C. Davis, *Structural Analysis of Shipping Casks, Vol. 9, Energy Absorption Capabilities of Plastically Deformed Struts under Specified Impact Conditions,* ORNL/TM-1312 (February 1971).

24. A. E. Spaller, *Structural Analysis of Shipping Casks, Vol. 2, Resistance to Puncture,* ORNL/TM-1312 (September 1966).

25. H. A. Nelms, *Structural Analysis of Shipping Casks, Vol. 3, Effects of Jacket Physical Properties and Curvature on Puncture Resistance,* ORNL/TM-1312 (June 1968).

26. *ASME Boiler and Pressure Vessel Code,* Sect. VIII, "Rules for Construction of Pressure Vessels," American Society of Mechanical Engineers, New York.

27. R. L. Cox, *A Computer Program for Calculating Temperatures Attained by LMFBR Fuels from Decay Heat Emission,* ORNL/TM-3773 (June 1973).

28. T. Rockwell, *Reactor Shielding Manual,* Van Nostrand, New York, 1956.

29. *Reactor Handbook,* 2d ed., Vol. III, Part B, "Shielding," ed. E. P. Blizard and L. S. Abbott, Interscience, New York, 1962.

Appendix A

AS-BUILT DRAWINGS

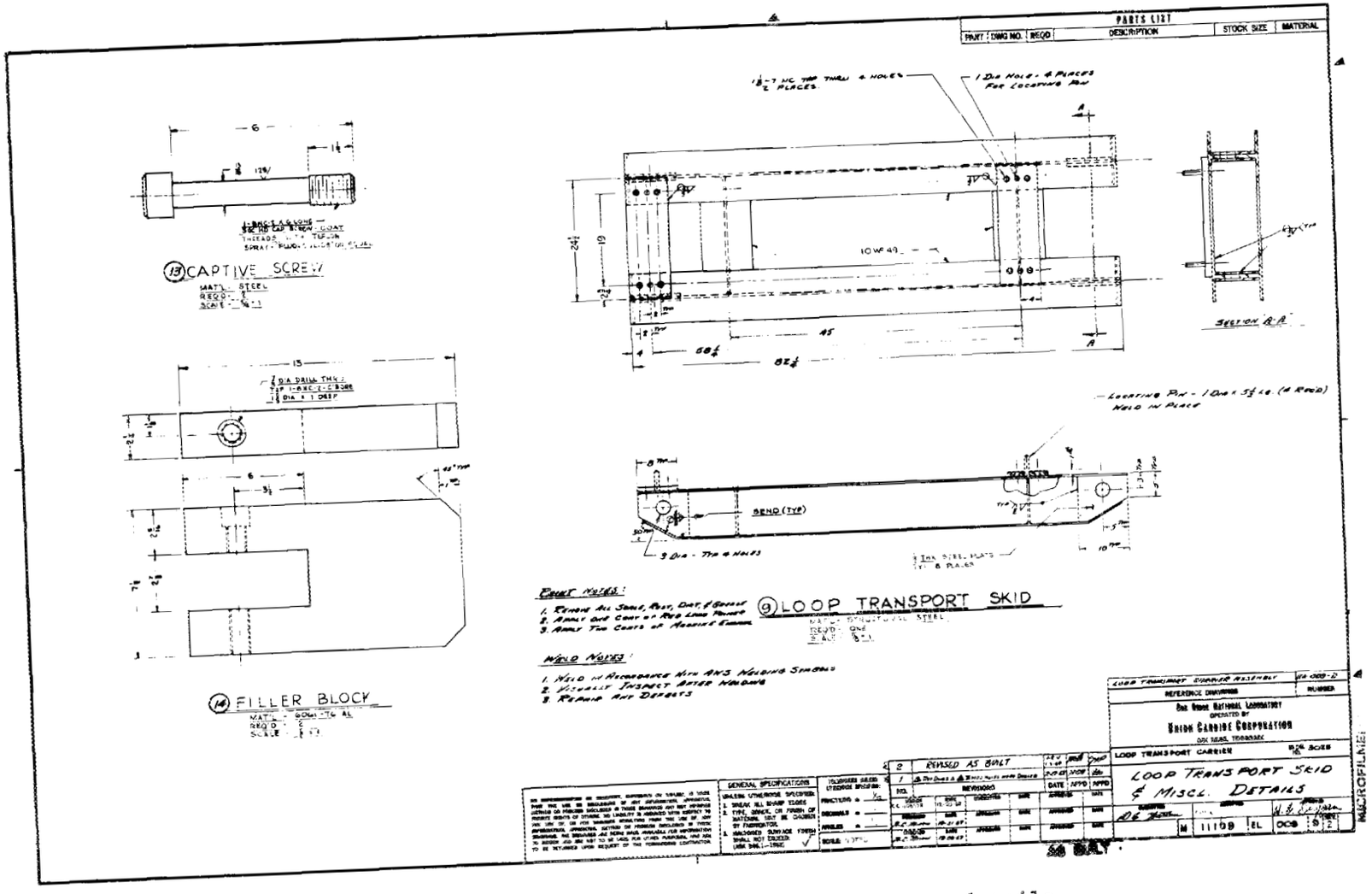

Fig. A.1. Loop transport skid and miscellaneous details.

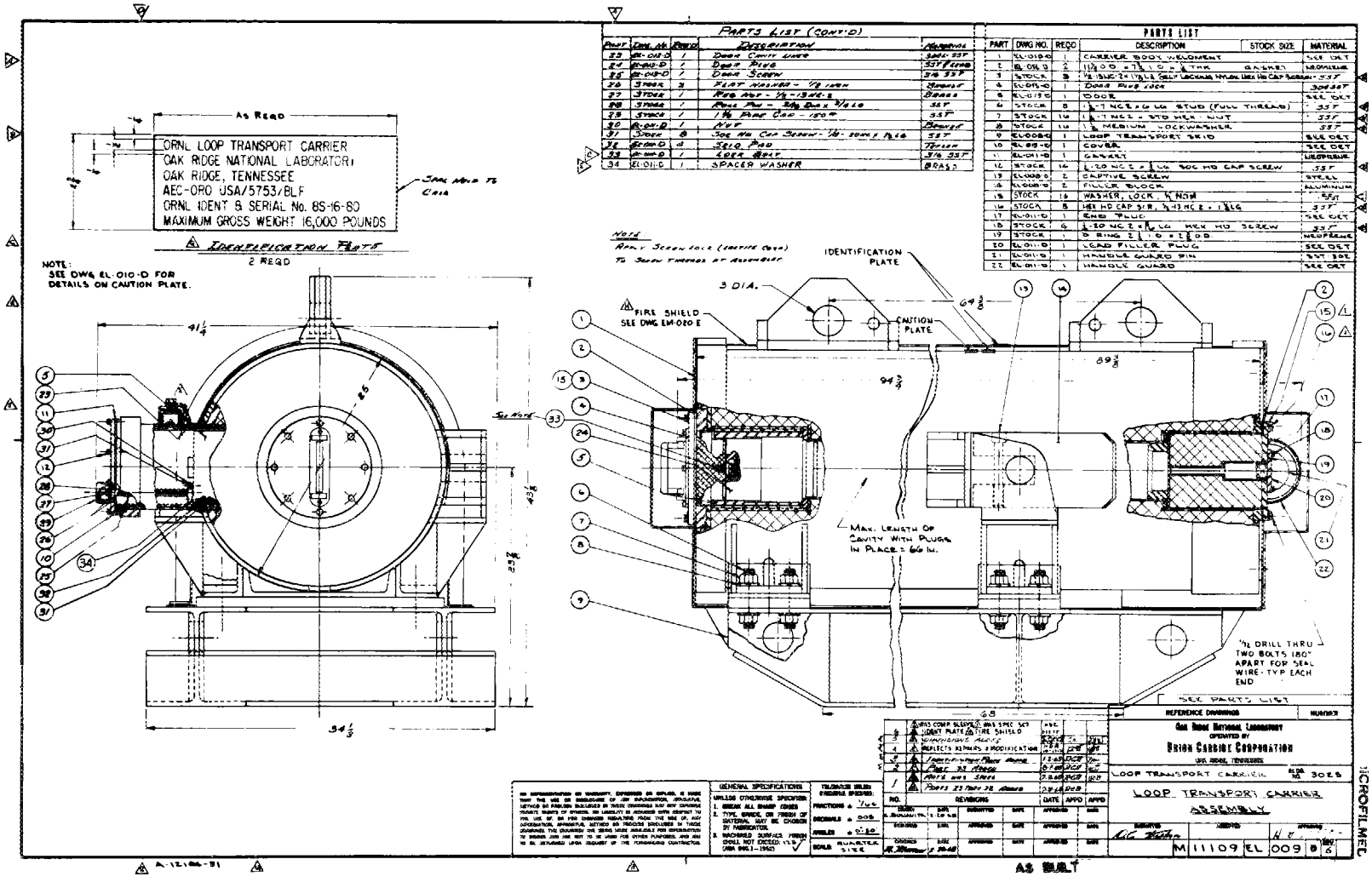

Fig. A.2. Loop transport carrier, assembly.

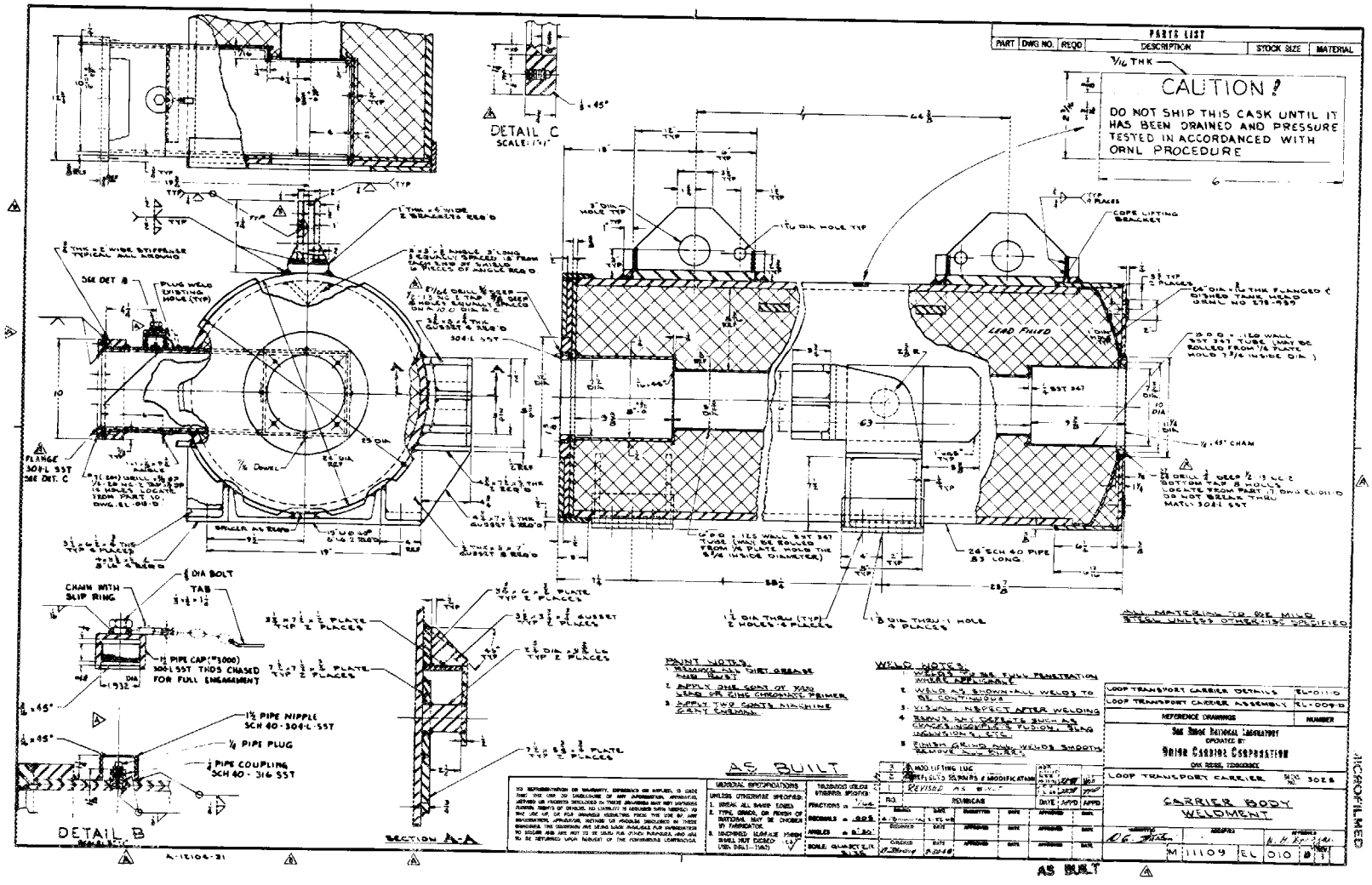

Fig. A.3. Carrier body weldment.

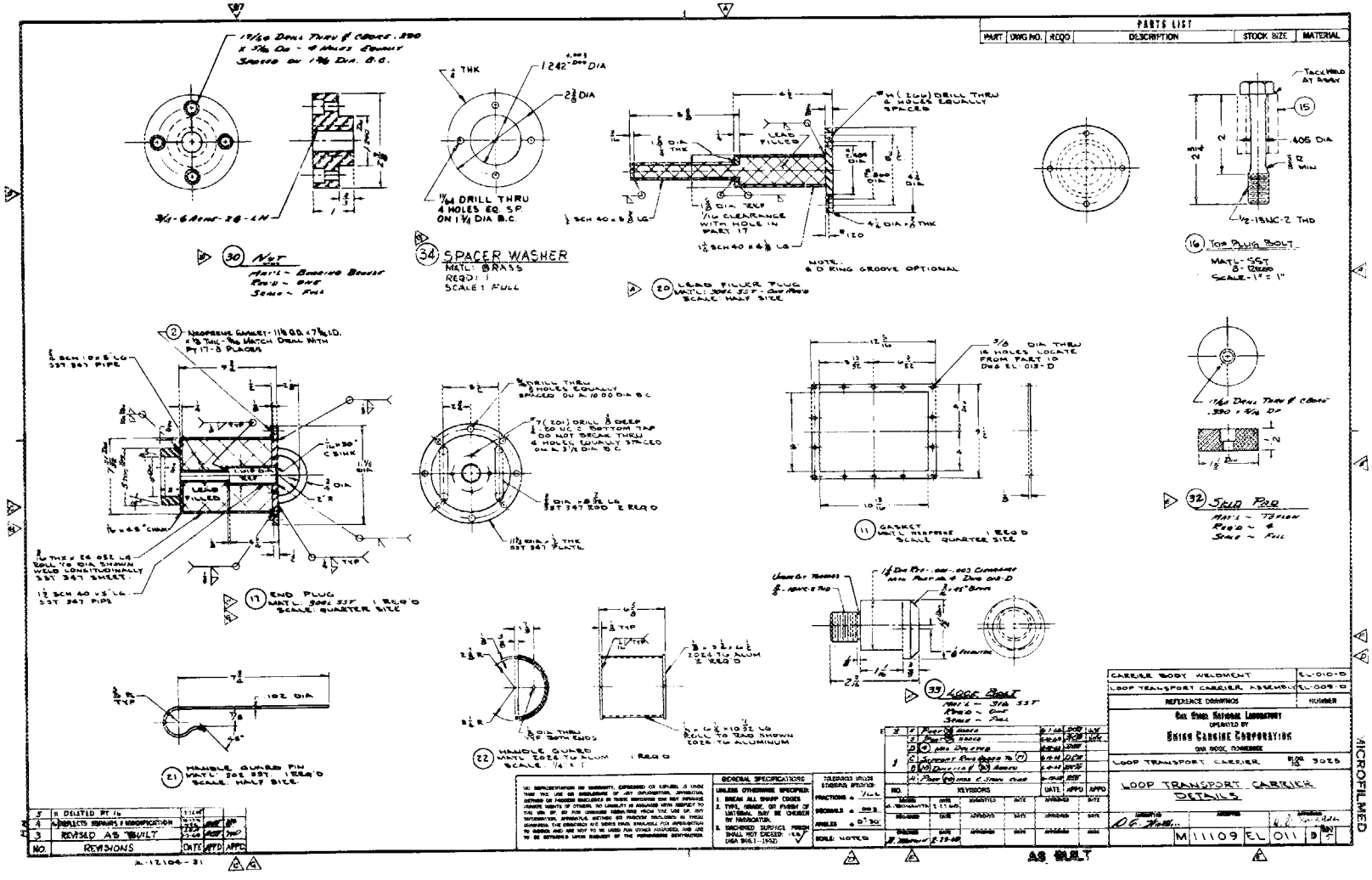

Fig. A.4. Loop transport carrier, details.

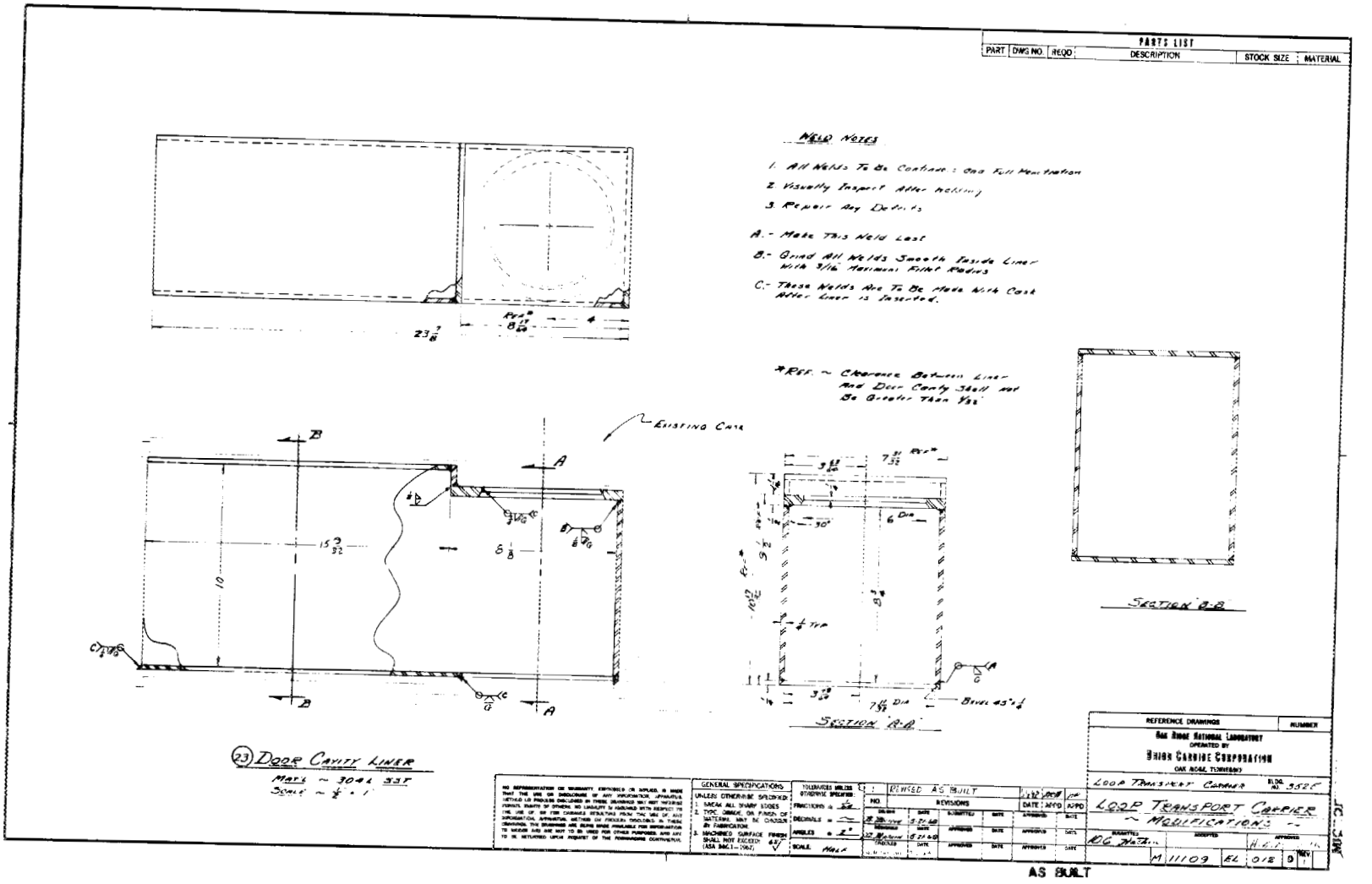

Fig. A.5. Loop transport carrier, modifications.

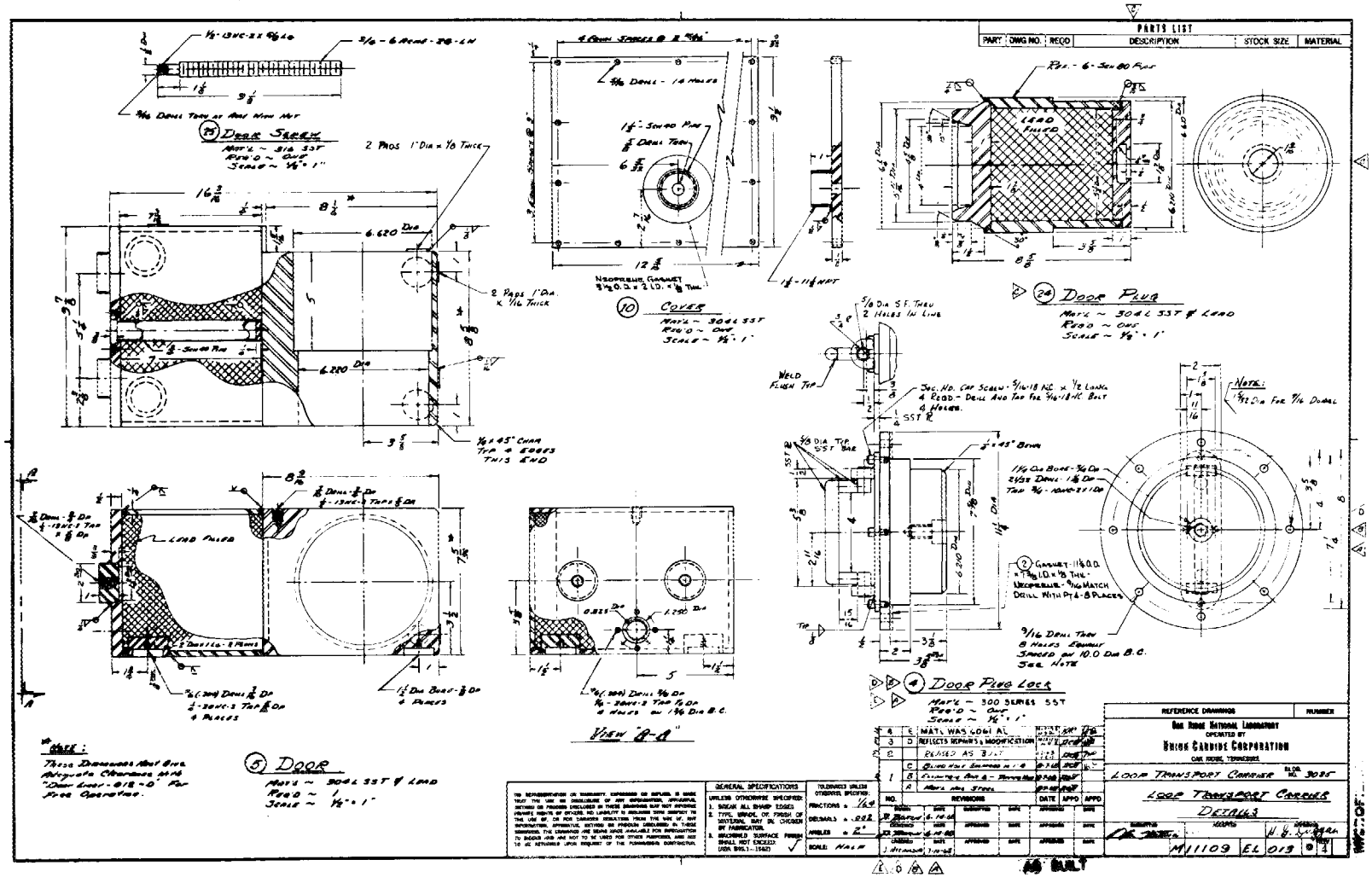

Fig. A.6. Loop transport carrier, details.

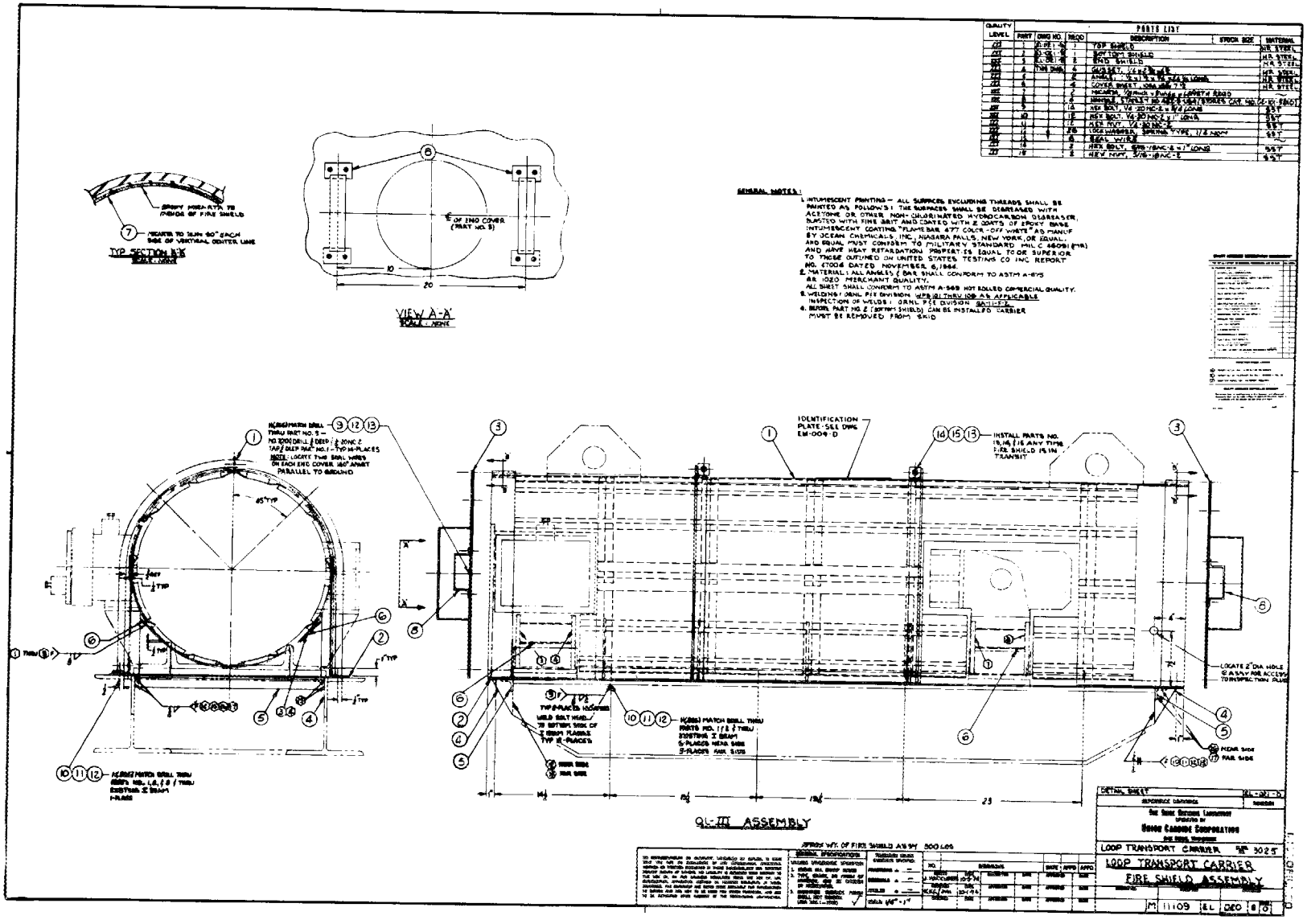

Fig. A.7. Loop transport carrier, fire shield assembly.

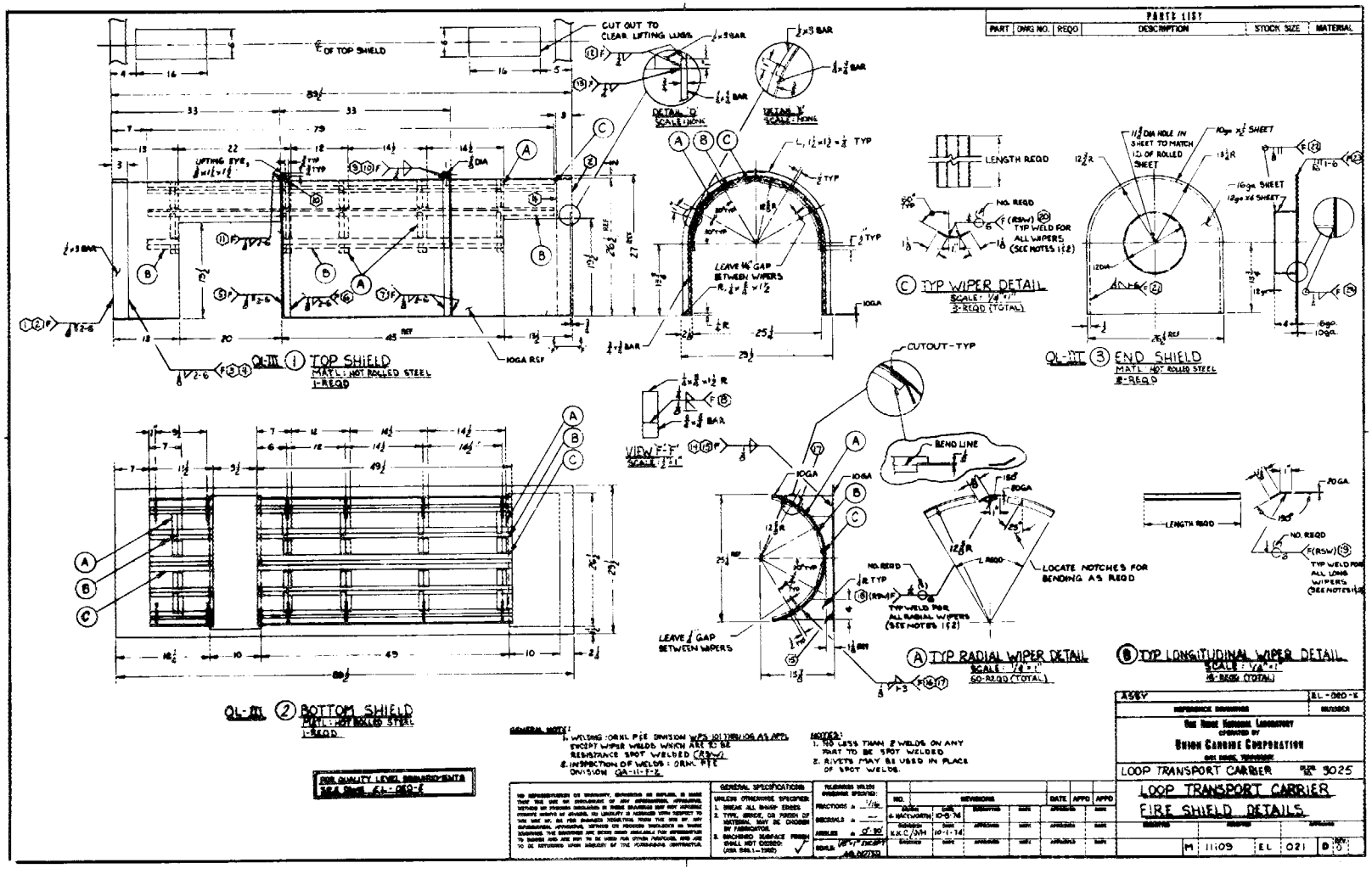

Fig. A.8. Loop transport carrier, fire shield details.

Appendix B

APPROVAL DOCUMENTS

INTRA-LABORATORY CORRESPONDENCE

OAK RIDGE NATIONAL LABORATORY

October 9, 1975

TO: J. H. Evans/E. M. King

FROM: Transportation Committee

SUBJECT: Approval of SARP - ORNL Loop Transport

The ORNL Transportation Committee has reviewed the subject SARP in light of the requirements (internal review) of paragraph B of AEC Immediate Action Directive 5201-3. Particular attention was given to the areas of structural integrity, thermal resistance, radiation shielding, nuclear criticality safety, and quality assurance. This review did not necessarily consider editorial, typographical, or computational correctness, these matters being the responsibility of the authors and their sponsors.

It has been determined that the container meets the requirements of ERDAM 0529 and the SARP is approved for submission to the ERDA requesting a certificate of compliance and approval of the cask for use in offsite shipments of fissile and radioactive materials.

for James R. Robinson
ORNL Transportation Committee

JNR:bb

cc: Transportation Committee

Form AEC-618
(12-73)
10 CFR 71
AECM 5201

U.S. ATOMIC ENERGY COMMISSION

CERTIFICATE OF COMPLIANCE

For Radioactive Materials Packages

1a. Certificate Number	1b. Revision No.	1c. Package Identification No.	1d. Page No.	1e. Total No. Pages.
5753	1	USA/5753/BLF (DOE-OR)	1	2

2. PREAMBLE

2a. This certificate is issued to satisfy Sections 173.393a, 173.394, 173.395, and 173.396 of the Department of Transportation Hazardous Materials Regulations (49 CFR 170-189 and 14 CFR 103) and Sections 146-19-10a and 146-19-100 of the Department of Transportation Dangerous Cargoes Regulations (46 CFR 146-149), as amended.

2b. The packaging and contents described in item 5 below, meets the safety standards set forth in Subpart C of Title 10, Code of Federal Regulations, Part 71, "Packaging of Radioactive Material for Transport and Transportation of Radioactive Material Under Certain Conditions."

2c. This certificate does not relieve the consignor from compliance with any requirement of the regulations of the U.S. Department of Transportation or other applicable regulatory agencies, including the government of any country through or into which the package will be transported.

3. This certificate is issued on the basis of a safety analysis report of the package design or application—

(1) Prepared by *(Name and address)*:	(2) *Title and Identification of report or application*:	(3) Date:
Oak Ridge National Laboratory Post Office Box X Oak Ridge, Tennessee 37830	Safety Analysis Report for Packaging ORNL Loop Transport Cask Report No.: ORNL/ENG/TM-11	November 1977

4. CONDITIONS

This certificate is conditional upon the fulfilling of the requirements of Subpart D of 10 CFR 71, as applicable, and the conditions specified in item 5 below.

5. Description of Packaging and Authorized Contents, Model Number, Fissile Class, Other Conditions, and References:

(a) Packaging:

(1) Model No.: ORNL Loop Transport Cask

(2) Description:

Packaging for irradiated experimental capsules and spent fuel elements. Containment consists of the cladding or jackets of fuel elements or capsules or an inner container meeting DOT Specification 2R or special form. The inner cavity is 5 3/4 in. diameter x 68 in. long. The outside dimensions are 24 in. diameter x 89 3/8 in. long. Shielding consists of a minimum thickness of 8 5/16 in. lead with a 1/8 in. thick inner stainless steel liner and an outer shell consisting of a 24 in. schedule 40 carbon steel pipe. Access to the cavity is through:

(i) A sliding door having 8 1/2 in. closure bolts.

(ii) A plug on the opposite end having 8 1/2 in. closure bolts.

Each opening is gasketed with a neoprene gasket. The gross weight of the cask is 16,150 lb. The skid weight is about 1000 lb.

6a. Date of Issuance: October 17, 1977	6b. Expiration Date:
FOR THE U.S. ATOMIC ENERGY COMMISSION	
7a. Address of *Issuing Office*: Department of Energy Post Office Box E Oak Ridge, Tennessee 37830	7b. Signature, Name, and Title of *Approving Official*: William H. Travis William H. Travis, Director Safety & Environmental Control Division

(2) Description (continued)

A fire shield consisting of 30 in. diameter mild steel cover 1/8 in. thick and painted with intumescent paint surrounds the cask.

(3) Drawings:

The cask was constructed and modified in accordance with ORNL Drawings M-11109-EL-008-D through -013-D, -020-E, and -021-D.

(b) Contents:

(1) Type and Form of Material

Solid, large quantity of radioactive materials, fissile and non-fissile, increased in metal cladding, meeting special form or packaged in DOT Specification 2R inner container and whose decay heat load does not exceed 450 watts when shipped by Common Carrier. When shipped by exclusive use vehicle, the decay heat will not exceed 1,000 watts.

(2) Maximum Quantity of Material per Package

Fissile material is limited to 1250g. per shipment; however, if the total quantity of fissile material exceeds 800g., the distribution of fissile material is further limited to 200g. per linear ft.

(c) Fissile Class I

Appendix C

DERIVATION OF EQUATIONS AND COMPUTER LISTINGS

Equations are derived and listings are given herein for the 1001 CASK, 1005 CASK, and 1014 CASK computer programs. A listing is also presented for the 1018 CASK program.

C.1 Program 1001 CASK

The 1001 CASK computer program was written to compute an acceleration-deflection energy history of the impact resulting from a free drop of a cylindrical cask constructed of a homogeneous material onto its top corner. The equations necessary for this computation are derived, and the program listing is presented in the following subsections.

C.1.1 Equation derivation

When a cask constructed of a single, ideally plastic material impacts on its top corner, the major portion of the kinetic energy will be dissipated through displacement of material in the impact area. An ideally plastic material is one which has a stress-strain relationship that can be represented by a horizontal line. The following expression can be used as a basis for determining the effect of a top-corner impact on the cask:

$$dU = S\ dV\ , \tag{C.1}$$

where

U = energy absorbed,

S = quantity of energy required to displace a unit volume of material or stress divided by strain,

V = volume of material displaced.

The lack of an accurate numerical value for the term S in Eq. (C.1) necessitates a conservative estimation. With reference to the computational diagram shown in Fig. C.1, it can be said that

$$dV = (XY\ dZ)/2\ , \tag{C.2}$$

where, by trigonometry,

$X = R(\cos B - \cos A)$,

$Y = X(\tan \alpha) = (\tan \alpha)\ R\ (\cos B - \cos A)$,

$dZ = R \cos B\ dB$.

ORNL DWG 74-9726

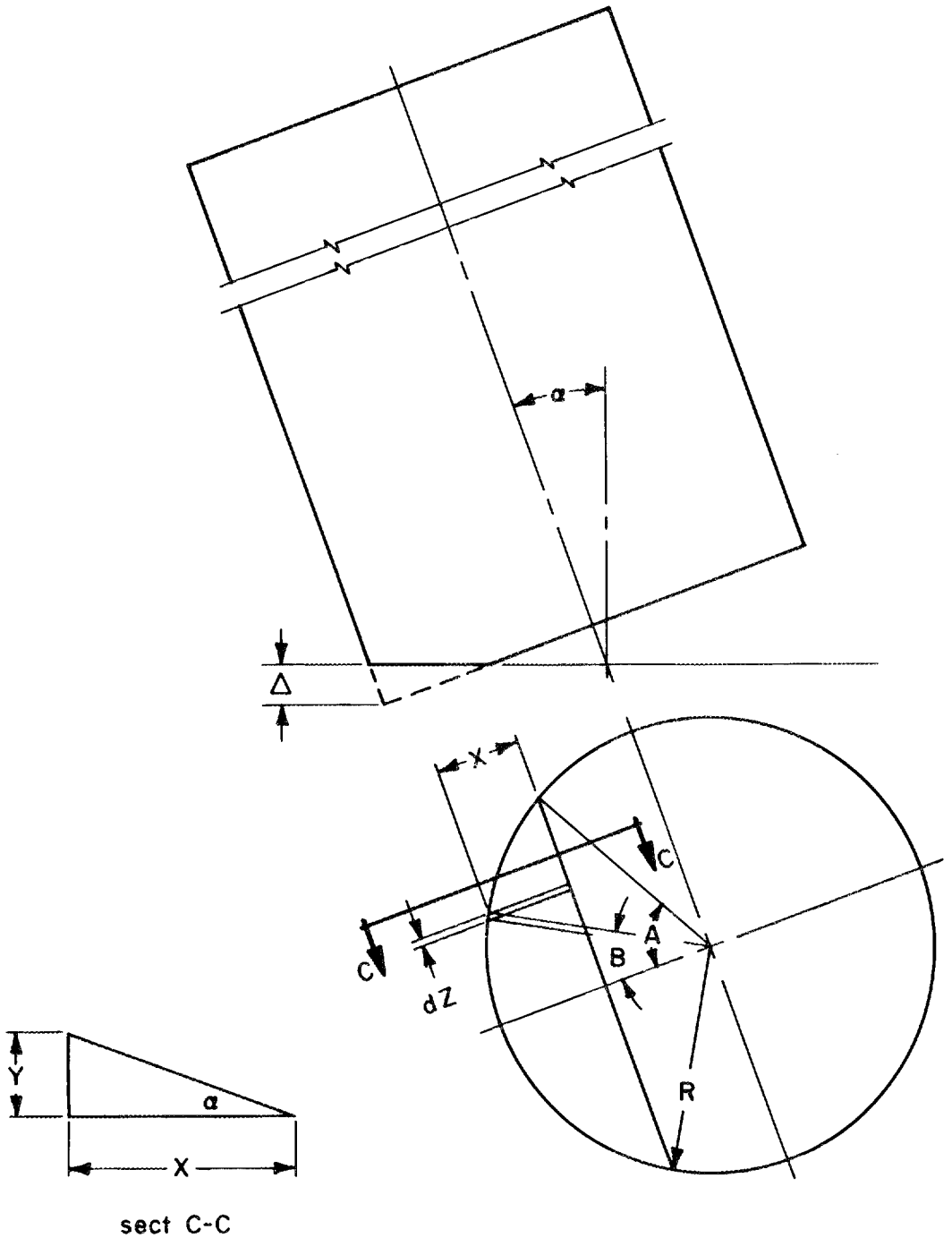

Fig. C.1. Computational diagram for top-corner impact of cask.

It follows that

$$dU = (SXY\ dZ)/2\ , \tag{C.3}$$

$$U = \Sigma\ dU = \Sigma\ (SXY\ dZ)/2\ . \tag{C.4}$$

Equation (C.4) can be solved readily by using the computer. A value for the angle A (illustrated in Fig. C.1) can be assumed, and the angle B can be incremented from -A to A, or from 0 to A if the result is multiplied by 2, and the energy required for the assumed deformation can be computed. The value for the angle A is started small and increased in small increments, and the energy required for deformation at each increment is compared with the potential energy of the cask. In this manner, a computed impact history is produced.

The 1001 CASK computer program also computes other variables by using the following expressions. The maximum deformation

$$\Delta = R(\sin\ \alpha)(1 - \cos\ A)\ . \tag{C.5}$$

The applied force

$$F = dU/d\Delta\ . \tag{C.6}$$

Acceleration

$$a = Fg_c/W\ , \tag{C.7}$$

where

g_c = gravitational constant ($lb_m \cdot ft/lb_f \cdot sec^2$),
W = weight (lb).

The velocity (v) at any increment is found by using the kinetic energy (KE) relationship

$$\Delta KE = U = m(v_0^2 - v^2)/2 \ , \tag{C.8}$$

or

$$v = (v_0^2 - 2U/m)^{1/2} = [(2g_c/W)(Wh - U)]^{1/2} \ , \tag{C.9}$$

where

v_0 = initial velocity (fps),
m = mass of cask ($lb \cdot sec^2/ft$),
h = drop height (ft).

The time is computed by using summary techniques and the relationship

$$a = dv/dt$$

or

$$dt = dv/a \ . \tag{C.10}$$

The foregoing relationships are valid regardless of the angle at which the cask impacts the surface onto which it falls. If the impact is directed through the center of gravity of the cask, the drop is a center-of-gravity drop, and all the energy will be dissipated on the initial impact. If the drop angle is other than the angle required for a center of gravity drop, the cask will retain a portion of its potential energy as kinetic energy and revolve about the impact point. The kinetic energy will be dissipated on secondary impact of the cask. This case can be calculated by using the basic theory of impulse and momentum. A similar case was handled by Beer and Johnston on p. 695 of *Mechanics for Engineers*, and their approach was used in this analysis.

From application of the principles of impulse and momentum, as illustrated in Fig. C.2, it can be seen that the only impulsive forces external to the cask are impulsive reactions F and friction (R). Taking moments about the impact point Q,

$$m\bar{v}_1(\sin\theta)P + 0 = m\bar{v}_2P + \bar{I}\omega_2 \ . \tag{C.11}$$

The cask is rotating about point Q. Therefore,

$$\bar{v}_2 = P\omega_2 \ . \tag{C.12}$$

Substitution of Eq. (C.12) into (C.11) yields

$$m\bar{v}_1(\sin\theta)P = m(P\omega_2)P + \bar{I}\omega_2 \ . \tag{C.13}$$

Therefore,

$$\omega_2 = [m\bar{v}_1(\sin\theta)P]/(mP^2 + \bar{I}) \ , \tag{C.14}$$

$$\bar{v}_2/P = [m\bar{v}_1(\sin\theta)P]/(mP^2 + \bar{I}) \ , \tag{C.15}$$

$$\bar{v}_2 = [m\bar{v}_1(\sin\theta)P^2]/(mP^2 + \bar{I}) \ . \tag{C.16}$$

The kinetic energy of the cask after impact is given by the expression

$$KE_2 = (1/2)m\bar{v}_2^2 + (1/2)\bar{I}\omega_2^2 \ . \tag{C.17}$$

It can be concluded that the energy absorbed on the initial impact is the difference between the initial potential energy at the drop height and the kinetic energy in the system after impact. This is shown as follows:

$$U \text{ absorbed initially} = Wh - KE_2 \ .$$

ORNL DWG 75-12838

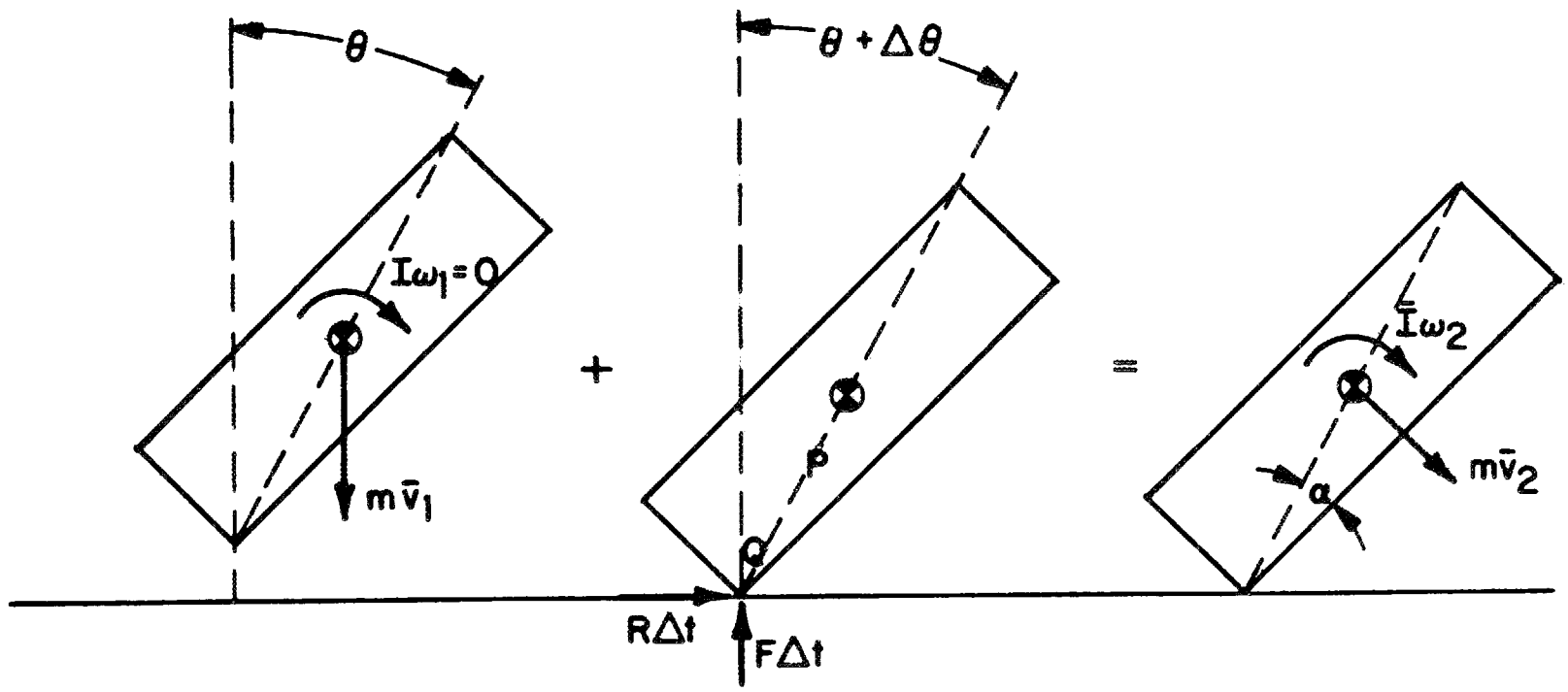

Syst. Momenta$_1$ + Syst. Ext. Impulse$_{1\rightarrow 2}$ = Syst Momenta$_2$

Fig. C.2. Principles of impulse and momentum for a corner impact.

The preceding formulations were coded in FORTRAN and are a part of the 1001 CASK computer program.

C.1.2 Program listing

The 1001 CASK computer program listing is given here.

```
**FTN,L,E,G.
C              PROGRAM NUMBER  1001-CASK  -  MODIFIED
C  THIS PROGRAM COMPUTES THE RESPONSE OF A CASK HAVING RIGHT CYLINDRICAL
C  GEOMETRY ON THE INITIAL IMPACT ON ITS CORNER.  THIS PROGRAM ASSUMES
C  THE CASK IS MADE OF A HOMOGENEOUS MATERIAL HAVING AN IDEAL STRESS-
C  STRAIN RELATIONSHIP.  THE IMPACT SURFACE IS ASSUMED TO BE AN INFINITELY
C  HARD UNYIELDING SURFACE WITH AN INFINITELY HIGH COEFFICENT OF FRICTION
C  WITH THE CASK.
C   BY JOHN EVANS P.E., GENERAL ENGINEERING DIVISION, OAK RIDGE NATIONAL LAB.
C
C                        GLOSSARY OF NOTATION
C             R=RADIUS OF CASK
C             C=CASK LENGTH
C             S=YIELD STRESS OR FLOW PRESSURE
C             W=CASK WEIGHT
C             H=DROP HEIGHT
C             O=ANGLE AT WHICH CASK IMPACTS
C             THETA=ANGLE BETWEEN VERTICAL AND IMPACT PT-C.G.
C             ZETA=THE CHANGING THETA ANGLE AFTER IMPACT
C             U=ENERGY
C             F=FORCE
C             T=TIME
C             AG=ACCELERATION
C             UT=TOTAL ENERGY
C             V=VELOCITY
C             X=DEFORMATION
C             AN=ANGLE IN CONTACT / THE SURFACE
C
      DIMENSION V(750),AR(750),F(750),U(750),T(750),AN(750),
     1 X(750),AG(750),ZETAD(750)
      PI=3.141596254
      S=0.0
      ANA = 0.0
C  INPUT MATERIAL CONSTANT
C  INPUT CASK GEOMETRY
      W=16000
      C=89.38
      R=12.5
      O= ATAN(2.*R/C)
C  INPUT TEST CONDITION
      H=36.0
      DO 20 NN=1,2
      IF(NN .NE. 1) H=360.
C  INPUT ANGLE INCREMENTS
   30 BB=.01
      AA=.01
      DO 326  KC=1,2
      S=6000.0
      IF(KC.EQ.2) S=14000.0
      WRITE (51,1002)
      WRITE (51,1002)
      WRITE (51,1010) H
 1010 FORMAT(1H ,30X,'LOOP TRANSPORT CASK,  DROP HT.=',5X,F8.2)
      WRITE (51,1002)
      WRITE (51,1002)
C  ZERO SUBSCRIPTED VARIABLES
      DO 14 I=1,750
```

```
      AN(I)=0.0
      AG(I)=0.0
      V(I)=0.0
      X(I)=0.0
      T(I)=0.0
      F(I)=0.0
      U(I)=0.0
      AR(I)=0.0
   14 CONTINUE
C  ZERO NONSUBSCRIPTED VARIABLES
      TA=0.0
      AE=0.0
      A=0.0
      AR=0.0
      TX=0.0
      U=0.0
      XX=0.0
      XA=0.0
C  THE FOLLOWING CALCULATES THE AMOUNT OF ENERGY ABSORBED ON
C INITIAL IMPACT FOR A PERFECTLY PLASTIC CASK
      GRAV=32.2*12.
      XMASS = W/GRAV
      XIMASS=(XMASS/12.)*(3.*R**2.+C**2.)
      UPOTEN=W*H
C PDIST IS THE DISTANCE FROM IMPACT POINT TO CG
      PDIST=SQRT((C/2.)**2.+R**2.)
C THETA IS THE ANGLE OF THE CG WITH RESPECT TO VERTICAL
      THETA=O-ATAN(2.*R/C)
C CALCULATE VELOCITY BEFORE IMPACT
      VEL1=GRAV*SQRT(2.*H/GRAV)
C CALCULATE ANGULAR AND VECTOR VELOCITY AFTER IMPACT
      OMEGA2=XMASS*VEL1*SIN(THETA)*PDIST/(XMASS*PDIST**2.+XIMASS)
      VEL2=OMEGA2*PDIST
C CALCULATE KINETIC ENERGY REMAINING AFTER IMPACT
      UKINT2=(XMASS*VEL2**2.)/2.+(XIMASS*OMEGA2**2.)/2.
C CALCULATE ENERGY ABSORBED ON INTIAL IMPACT
      UT=UPOTEN-UKINT2
      VV=SQRT((64.*H)/12.)
      DO 1 I=1,750
      AR=0.0
C  INCREMENT ANGLE A
    9 A=A+AA
      CA=COS(A)
      B=0.0
      AE=0.0
      SUMU=0.0
   10 DO 2 J=1,750
C  INCREMENT ANGLE B
      B=B+BB
      CB=COS(B)
C  CALCULATE VOLUME DISPLACED
   11 CC=(CB-CA)
      BY=TAN(O)*R*CC
      BX=R*CC
   12 DZ=R*CB*BB
      DU=BY*BX*DZ*S
C  CALCULATE ENERGY ABSORBED
```

```
      SUMU=SUMU+DU
C  CALCULATE AREA
   13 DA=2.*BX*DZ/COS(O)
      AE=AE+DA
      IF(B.GE.A) GO TO 3
    2 CONTINUE
    3 U(I)=SUMU
      AR(I)=AE
C  CALCULATE FORCE
      F(I)=AR(I)*S
C  CALCULATE VELOCITY
      IF(U(I).GE.UT) GO TO 16
    5 VA  =SQRT((64./(12.*W))*(UT-U(I)))
   16 IF (U(I).GE.UT) VA=0.0
C CALCULATE ACCELERATION
      AG(I)=F(I)/W
C CALCULATE DEFORMATION
      XA  =(TAN(O)*COS(C)*R*(1.-CA))
      X(I)=XA
C CALCULATE TIME
      TX=(XA-XX)/((VV+VA)*6.)
    7 TA=TA+TX
      T(I)=TA*1000.
      XX=XA
    6 V(I)=VA
    8 VV=VA
      AN(I)=A*57.3
      IF(U(I).GE.UT) GO TO 4
    1 CONTINUE
    4 CONTINUE
C  THIS SECTION CALCULATES ANGULAR ACCELERATION AND ANGULAR
C  POSITION WITH RESPECT TO TIME
      TIME = TA
      ALPHA = OMEGA2/TIME
      DO 101 JJ=1,I
      ZETA =THETA +(ALPHA/2.)*(T(JJ)/1000.)**2.
      ZETAD(JJ) = ZETA*57.3
  101 CONTINUE
C    OUTPUT-WRITE LOOP
      K=I
      WRITE (51,1002)
      WRITE(51,1004)
 1004 FORMAT (1H, 9X,37HCASK GEOMETRY AND MATERIAL PROPERTIES)
      WRITE (51,1002)
      WRITE(51,1005)
 1005 FORMAT (1H, 4X,6HRADIUS,8X,6HLENGTH,10X,6HWEIGHT,6X,
     1  15HSPECIFIC ENERGY,7X,15HENERGY ABSORBED,6X,16HPOTENTIAL ENERGY)
      WRITE(51,1006)
 1006 FORMAT (1H, 4X,6HINCHES,8X,6HINCHES,10X,6HPOUNDS,8X
     1        13HLB-IN/CU. IN.,8X,6HIN.LB.,14X,6HIN.LB.)
      WRITE(51,1002)
 1002 FORMAT(1H0)
      WRITE(51,1007) R,C,W,S,UT,UPOTEN
 1007 FORMAT (F11.3,F14.3,F16.1,F18.1,F18.1,F22.1)
      WRITE(51,1002)
      WRITE(51,1000)
 1000 FORMAT (1H.,4X,11HDEFORMATION,4X,8HVELOCITY,7X,4HTIME,13X,5HFORCE,
```

```
     1         10X,6HENERGY,5X,12HACCELERATION,10X,5HANGLE)
      WRITE(51,1001)
 1001 FORMAT (1H, 6X,6HINCHES,7X,8HFT./SEC.,4X,12HMILLISECONDS,8X,
     1         6HPOUNDS,10X,6HLB-IN.,10X,3HX G,12X,7HDEGREES)
      WRITE(51,1002)
      DO 15 I=1,K
      WRITE(51,1003) X(I),V(I),T(I),F(I),U(I),AG(I),ZETAD(I)
 1003 FORMAT(1H ,F14.4,F13.2,F16.5,F15.2,F16.2,F12.2,F16.2)
   15 CONTINUE
      CALL QWIKPL(X,AG,K,'LINEAR','J.H.EVANS$')
  326 CONTINUE
   20 CONTINUE
      STOP
      END
```

C.2 Program 1005 CASK

The 1005 CASK computer program was written to compute the acceleration-deflection energy history of the impact resulting from a free drop of a cylindrical cask onto its side. The equations necessary for this computation are derived, and the program listing is presented in the following subsections.

C.2.1 Equation derivation

When a cylindrical cask fabricated from a homogenous material impacts on its side, the deformation can be approximated as shown in Fig. C.3. The volume (V) of material displaced, shown shaded in Fig. C.3, can be expressed as follows:

$$V = (LR^2/2)(2\theta - \sin 2\theta) \tag{C.18}$$

$$= R^2L[\theta - \sin\theta\ (\cos\theta)] \ .$$

For this derivation, it was assumed that the cask is fabricated from an ideally plastic material, that is, a material which has a stress-strain relationship that can be represented by a horizontal line. For such a material, the product of the specific energy (S), the quantity of energy required to displace a unit volume of material, and the volume (V) of material displaced is equal to the energy absorbed (U), as expressed by the following equation:

$$U = SV = SR^2L(\theta - \sin\theta\ \cos\theta) \ . \tag{C.19}$$

Equation (C.19) can be solved by trial and error by assuming values of θ and calculating until

$$U = Wh \ , \tag{C.20}$$

ORNL DWG 74-9725

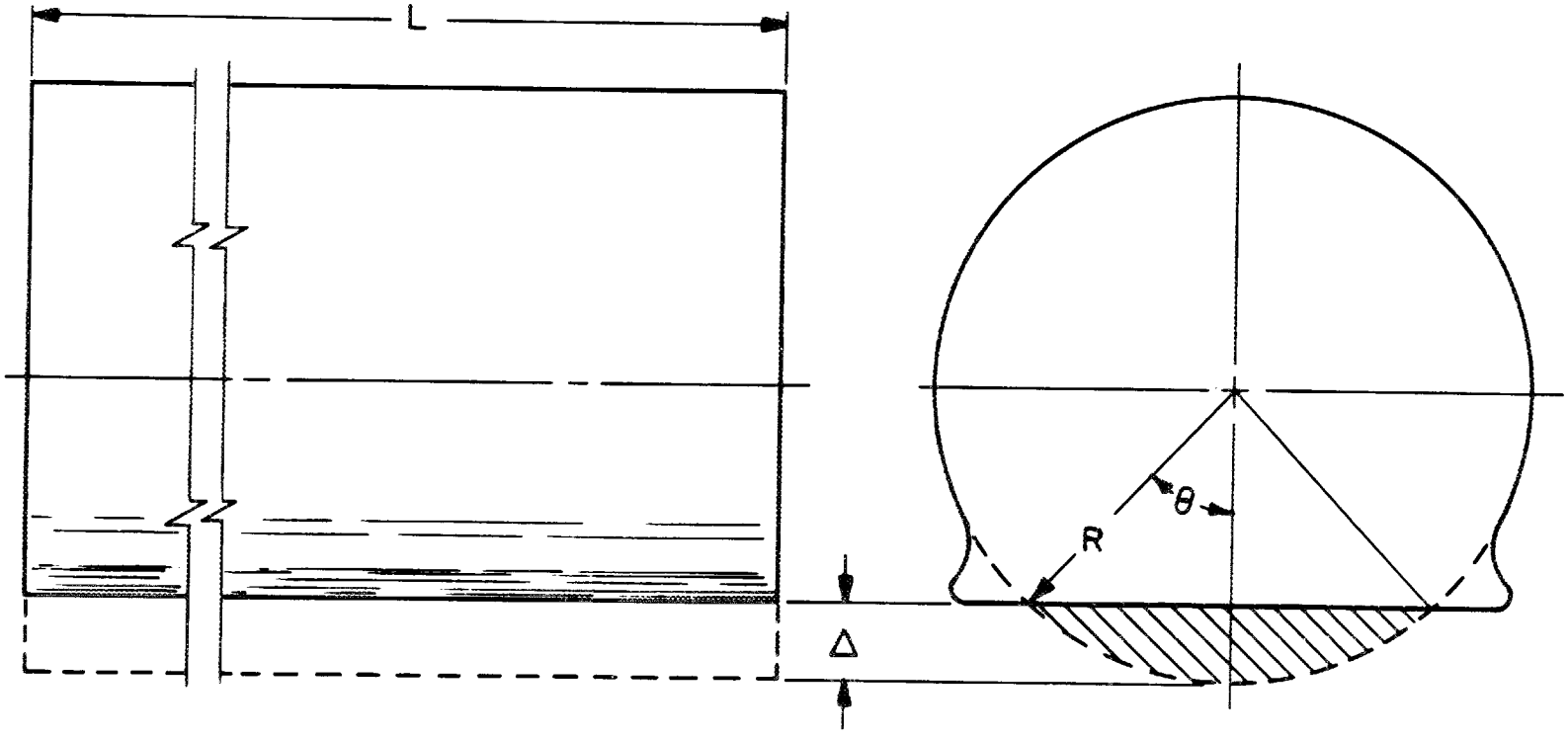

Fig. C.3. Computational model for side impact of cylindrical cask.

where

W = weight of the cask (lb),

h = drop height (ft).

The deflection

$$\Delta = R(1 - \cos\theta) \ , \tag{C.21}$$

and the area (A) at the surface

$$A = 2LR \sin\theta \ . \tag{C.22}$$

It follows that the force

$$F = SA \ , \tag{C.23}$$

and the acceleration

$$a = F/m = Fg_c/W \ , \tag{C.24}$$

where

m = mass of cask ($lb \cdot sec^2/ft$),

g_c = gravitational constant ($lb_m \cdot ft/lb_f \cdot sec^2$).

A computer program was written to solve these equations for increasing values of θ until the deformation is sufficient for the absorbed energy (U) to equal the potential energy (Wh) of the cask. Velocity (v) can also be computed from the kinetic energy relationship

$$U = \Delta KE \ , \tag{C.25}$$

and the lapsed time can be computed from the relationship

$$dt = dv/a \ . \tag{C.26}$$

C.2.2 Program listing

The 1005 CASK computer program lising is given on the following pages.

```
**FTN,L,E,G.
C                    PROGRAM NUMBER 1005-CASK
C
C
C   THIS PROGRAM ANALYZES THE IMPACT OF A CASK HAVING RIGHT
C   CYLINDRICAL GEOMETRY, IMPACTING WITH ITS AXIS HORIZONTAL , CODED BY
C   JOHN EVANS P.E.,  GEN.ENGR. DIV. CRNL, JUNE 1973.
C
C          LOOP TRANSPORT CASK
C
C                          GLOSSARY OF NOTATION
C
C                    X=DEFLECTION(INCHES)
C                    U=ENERGY(LB-INCHES)
C                    P=FORCE(POUNDS)
C                    AG=ACCELERATION(G'S)
C                    V=VELOCITY(FT/SEC)
C                    W=WEIGHT OF THE CASK(POUNDS)
C                    H=DROP HEIGHT(INCHES)
C                    C=CASK LENGTH(INCHES)
C                    R=CASK RADIUS(INCHES)
C                    O=ANGLE SUBTENDED BY THE DEFORMED AREA(RADIANS)
C                    UT=TOTAL POTENTIAL ENERGY OF THE CASK (LB-INCHES)
C                    T=SHELL THICKNESS (IN.)
C                    TH=HEAD THICKNESS,PLUG END (IN.)
C                    TAH=HEAD THICKNESS,BOTTOM END (IN.)
C                    W=CASK WEIGHT (POUNDS)
C                    SL=SPECIFIC ENERGY OF SHIELDING MATERIAL  (IN-LB/CU.IN)
C                    SC=SPECIFIC ENERGY OF CLADDING IN COMPRESSION (IN-LB/CU IN)
C                    OO=INCREMENT OF ANGLE O
C                    TM=TIME (SEC.)
C                    G=ACCELERATION (FT/SEC/SEC)
C                    VL=VOLUME OF SHIELDING DISPLACED (CU.IN.)
C                    UH=ENERGY DISSIPATED IN DEFORMING THE HEADS  (IN.LB.)
C                    UL=ENERGY DISSIPATED IN DISPLACING SHIELDING (IN.LB.)
C                    ZZ=ENERGY DISSIPATED IN DEFORMING COOLING FINS(IN-LB)
C
      DIMENSION U(1000),X(1000),P(1000),G(1000),AG(1000),TM(1000)
     1,AP(1000),V(1000)
      ZZ=0.
C  INPUT CASK GEOMETRY
      T=.688
      TAH=.375
      TH=1.375
      W=16000.
      R=12.5
      CI=89.38
C  INPUT TEST CONDITION
   66 DO 20 NN=1,2
      H=36.
      IF(NN .EQ. 2) H=360.
C    CALCULATE CASK POTENTIAL ENERGY
      UT=W*H - ZZ
C    INPUT INCREMENT OF ANGLE,O
      OC=.01
C  INPUT MATL. PROPERTIES
      SC=120000.
```

```
      DO 326 KC=1,2
      SL=6000.
      IF(KC.EQ.2) SI=14000
C    ZERO SUBSCRIPTED VARIABLES
      DO 1  I=1,1000
      X(I)=0.0
      U(I)=0.0
      TM(I)=0.0
      G(I)=0.0
      P(I)=0.
      AG(I)=0.0
      AP(I)=0.0
      V(I)=0.0
    1 CONTINUE
C    ZERO NONSUBSCRIPTED VARIABLES
      UL=0.0
      UH=0.0
      DT=0.0
      TS=0.0
      PU=0.0
      VV=0.0
      UU=0.0
      PP=0.0
      XX=0.0
      O=0.0
      V(1)=SQRT((64.*H/12.))
      VV=V(1)
      DO 2 I=1,1000
      IF(I.EQ.1) GO TO 21
      O=O+OO
      SC=SIN(O)
      SOO=SIN(2.*O)/2.
      CO=COS(O)
C  CALCULATE VOLUME OF SHIELDING DISPLACED
C  EQUATION 1
      VL=(R*R*CL*(O-SOO))
C  CALCULATE ENERGY DISSIPATED IN DISPLACING SHIELDING
C  EQUATION 2
      UL=SL*VL
C  EQUATION 6
      QC=O-SOO
C  EQUATION 12
      VH=(TH+TAH)*R*R*QC
C  EQUATION 13
      UH=SC*VH
      ARL=2.*R*SO*CL
      FORL=ARL*SL
      ARH=2.*R*SO*(TH + TAH)
      FORH=ARH*SC
      U(I)=UH + UL
C    COMPUTE DEFORMATION
      X(I)=R*(1.-CO)
C    COMPUTE APPLIED FORCE
      P(I)=FORL + FORH
C    COMPUTE ACCELERATION
      G(I)=(P(I)*32.)/W
      AG(I)=P(I)/W
```

```
      IF(U(I).GT.UT) GO TO  7
C     COMPUTE VELOCITY
    8 V(I)= SQRT((UT-U(I))*(64./(W*12.)))
    7 CONTINUE
C     COMPUTE LAPSED TIME
      DT=0.
      IF(G(I) .NE. 0.) DT=(VV-V(I))/G(I)
      TS=TS+DT
      TM(I)=TS*1000.
C     COMPUTE PERCENTAGE ENERGY STORED
      PU=U(I)/UT
   21 CONTINUE
    5 XX=X(I)
      UU=U(I)
      VV=V(I)
      PE = P(I)
      IF(U(I).GE.UT) GO TO 4
    2 CONTINUE
    4 CONTINUE
      J=I - 1
C     OUTPUT-WRITE LOOP
      WRITE(51,1009)
      WRITE(51,1009)
      WRITE(51,1002)
      WRITE(51,1008) H
 1008 FORMAT(1H ,25X,'LOOP TRANSPORT CASK',F10.3)
      WRITE(51,1002)
      WRITE(51,1009)
      WRITE(51,1009)
      WRITE(51,1002)
      WRITE(51,1004)
      WRITE(51,1002)
      WRITE(51,1005)
      WRITE(51,1006)
      WRITE(51,1002)                                                    11A 1
 1002 FORMAT(1H0)                                                       11B 1
 1004 FORMAT(1H ,30X,13HCASK GEOMETRY)
 1005 FORMAT (1H ,4X,6HRADIUS,9X,6HLENGTH,8X,10HSHELL THK.,5X,
     1        9HHEAD THK.,5X,9HHEAD THK.,7X,6HWEIGHT,5X,
     2        15HSPECIFIC ENERGY)
 1006 FORMAT (1H ,4X,6HINCHES,9X,6HINCHES,9X,6HINCHES,9X,6HINCHES,
     1        8X,6HINCHES,8X,6HPOUNDS,7X,11HIN-LB/CU IN)
      WRITE(51,1007) R,CL,T,TH,TAH,W,SL
 1007 FORMAT(1H ,F10.3,4F15.3,F15.1,F12.0)
      WRITE(51,1002)                                                    11A 1
      WRITE(51,1009)
      WRITE(51,1009)
      WRITE(51,1002)
      WRITE(51,1000)
 1000 FORMAT (1H ,4X,11HDEFORMATION,4X,8HVELOCITY,7X,4HTIME,13X,5HFORCE,
     1        10X,6HENERGY,5X,12HACCELERATION)
      WRITE(51,1001)
 1001 FORMAT (1H ,6X,6HINCHES,7X,8HFT./SEC.,4X,12HMILLISECONDS,8X,
     1        6HPOUNDS,10X,6HLB-IN.,10X,3HX G)
      WRITE(51,1002)                                                    11A 1
 1009 FORMAT(1H, X,49H*************************************************,
     1       55H*********************************************************,
```

```
    2        14H***************)
      DO 11 I=1,J
      WRITE(51,1003)  X(I),V(I),TM(I),P(I),U(I),AG(I)
 1003 FORMAT(1H ,F12.4,F13.2,F15.4,F18.2,F16.2,F12.2)
   11 CONTINUE
      CALL QWIKPL(X,AG,J,'LINEAR','J.H.EVANS$')
  326 CONTINUE
   20 CONTINUE
      STOP
      END
```

C.3 Program 1014 CASK

The 1014 CASK computer program was written to compute the response of a rigid cask equipped with an energy absorber to impact resulting from a free drop of the cask onto its energy absorber. The equations necessary for this computation are derived, and the program listing is presented in the following subsections.

C.3.1 Equation derivation

The general case of a cask equipped with an energy absorber which deforms in pure compression is illustrated by the computational model shown in Fig. C.4. If the force-deformation curve for the absorber is as shown in Fig. C.5, the following expression represents the energy expended as the cask moves from X_0 to X_n and deforms the absorber an amount δ_n:

$$\Delta U_n = F_n(X_n - X_{n-1}) = F_n\delta_n \ . \tag{C.27}$$

It follows that

$$U_n = \sum_{n=0}^{n=n} \Delta U = \sum_{n=0}^{n=n} F\delta \ . \tag{C.28}$$

The summation can be simplified by holding the magnitude of the incremental deformation (δ) of the absorber constant and satisfying the expression

$$N\delta = X_n \ , \tag{C.29}$$

where N = number of increments. The equation for the absorber deformation at point n (X_n) can be written as follows:

$$X_n = \varepsilon_n L = N\delta \ . \tag{C.30}$$

ORNL DWG 74-9714

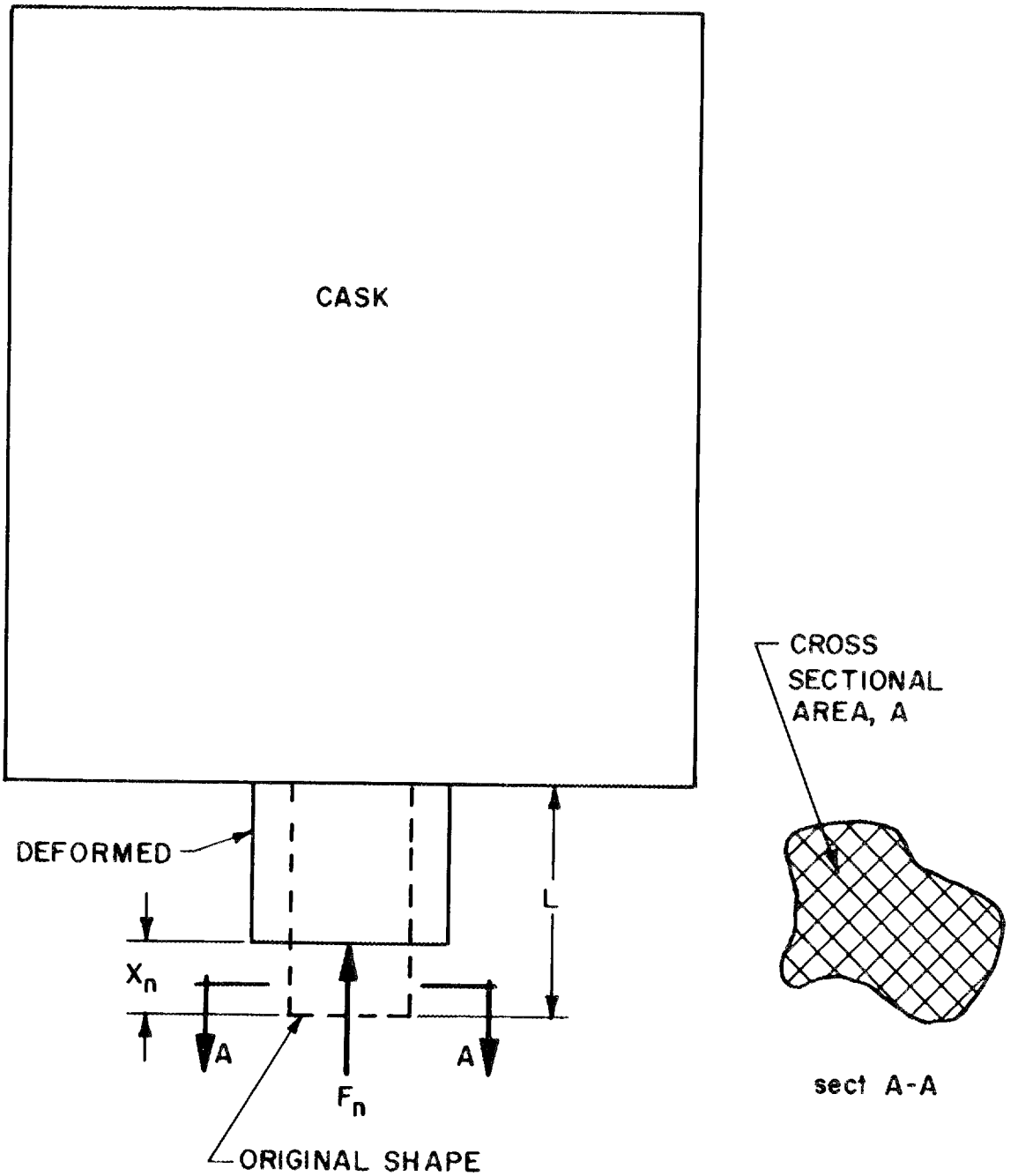

Fig. C.4. Computational model for impact of cask equipped with energy absorber which deforms in pure compression.

ORNL DWG 74-9716

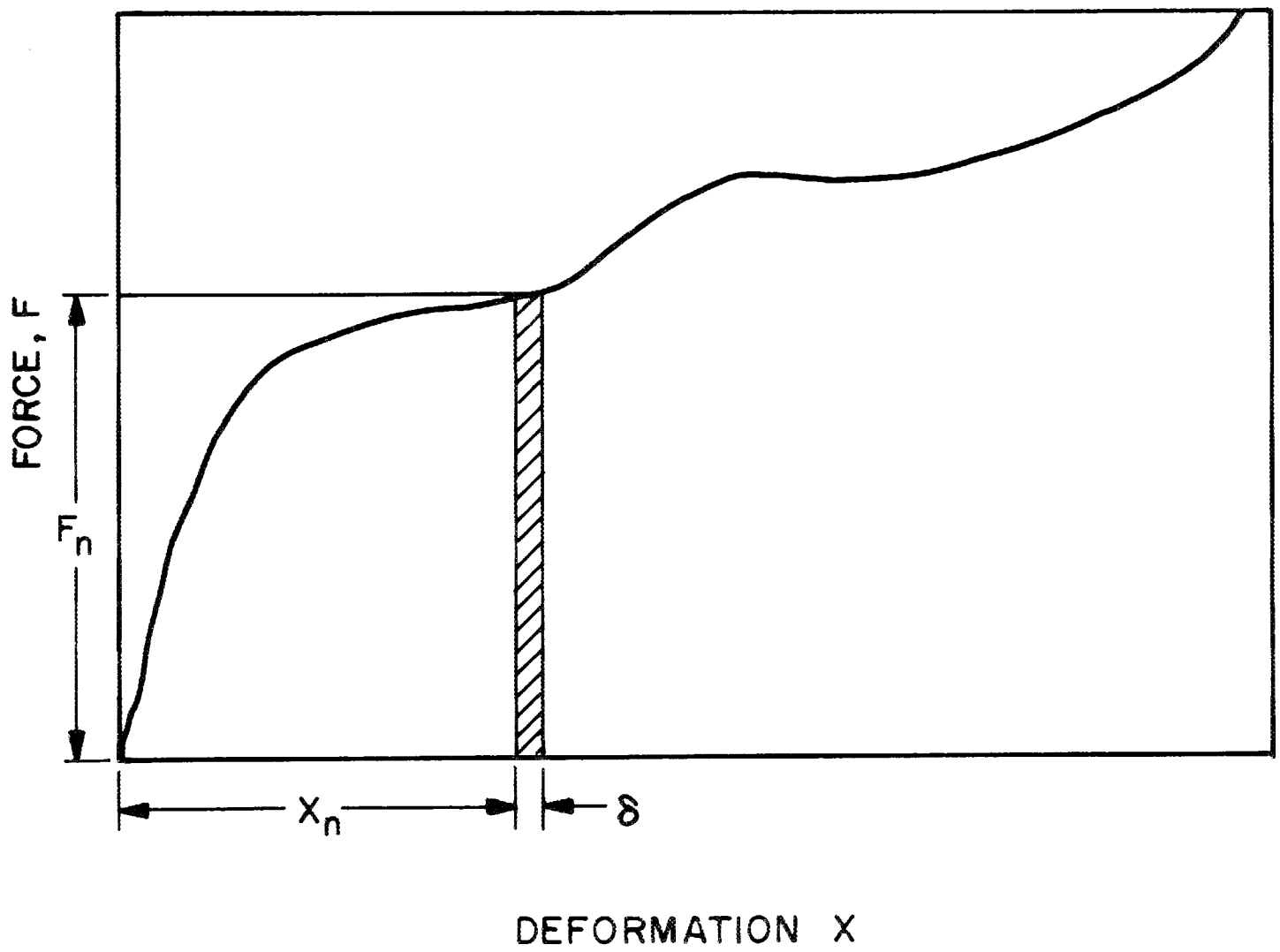

Fig. C.5. Force-deformation curve for energy absorber shown in Fig. C.4.

Equation (C.30) can be solved for the strain (ε) at point n as follows:

$$\varepsilon_n = N\delta/L \ , \tag{C.31}$$

The stress-strain equation for the material from which the energy absorber is constructed is as follows:

$$\sigma_i = f(\varepsilon_i) \ , \tag{C.32}$$

where

σ = stress,

ε = strain.

The force (F) can be determined from the expression

$$F = \sigma a \ , \tag{C.33}$$

where A = original cross-sectional area of the energy absorber.

The preceding relationships form the basis for the 1014 CASK computer program. The deformation of the energy absorber is increased in steps of constant magnitude. Strain, stress, and force are computed for deformation values, and the energy for each step is determined. The energy is added to the sum of that for previous steps and compared with the potential energy of the cask. When the dissipated energy equals the potential energy, the computations are ended.

The program is currently supplied with stress-strain equations [$\sigma = f(\varepsilon)$] for stainless steel and mild steel, and it can be used for energy absorbers with any cross-sectional shape. It is equipped to compute the area for circular absorbers with rectangular cross sections, as illustrated in Fig. C.6(a), as well as absorbers of other shapes with constant cross sections, as illustrated in Fig. C.6(b) and (c). For the absorber type illustrated in Fig. C.6(a), the radius, thickness, and depth must be input to the program in statement numbers 70, 71, and 72, while the thickness, depth, and length for the types illustrated in Fig. C.6(b) and (c) must be input as statement numbers 71, 72, and 73. For

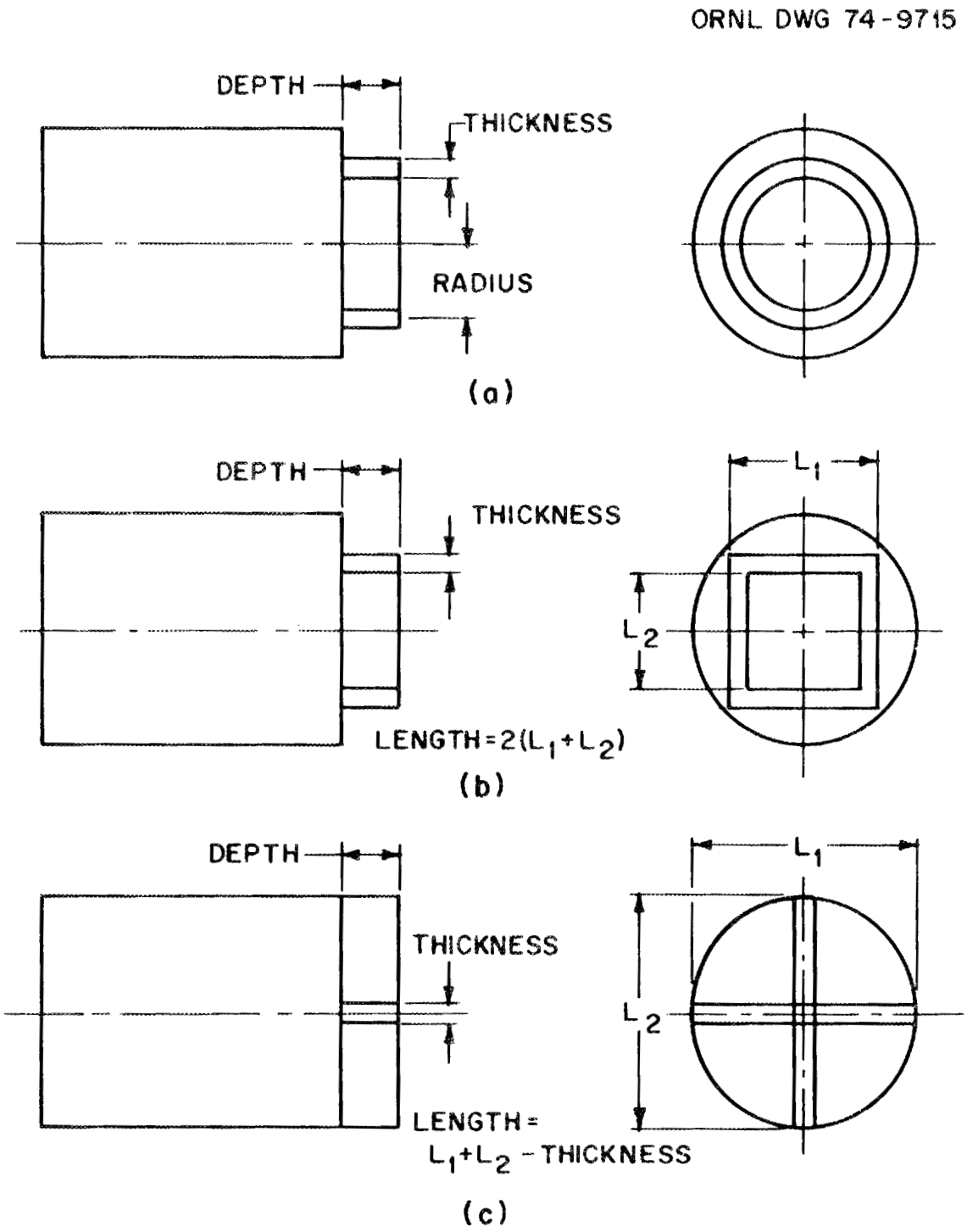

Fig. C.6. Typical energy absorber configurations.

absorbers of other geometries, the area must be calculated manually and input as statement 74. Those statements not applicable to the absorber being analyzed must be left as 0.0.

In addition, the weight of the cask in pounds must be input as statement 80, the drop height in inches in statement 81, and the absorber material must be input as statement 88. The material information is input as SST for annealed 300-series stainless steel and as STL for mild steel. If a finer or coarser mesh is desired, the value of DE in statement 60 can be decreased or increased. The 1000 format should be altered to identify the cask being analyzed.

C.3.2 Program listing

The 1014 CASK computer program listing is given on the following pages.

```
**FTN,L,M,E,G,A.
C                          PROGRAM 1014 CASK
C THIS PROGRAM COMPUTES THE RESPONSE OF A RIGID CASK EQUIPPED WITH AN ENERGY,
C ABSORBER WHICH DEFORMS IN PURE COMPRESSION CODED BY JOHN EVANS PE ,OAK RIDGE
C  ATIONAL LABORATORY, JUNE 1974
C                        GLOSSARY OF NOTATION

C              EE=AMOUNT STRAIN IS INCREMENTED-IN./IN.
C              S=STRESS PSI
C              DEF=ABSORBER DEFORMATION IN.
C              DU=DIFFERENTIAL ENERGY  IN.LB.
C              FORC=FORCE LB.
C              ENER=ENERGY DISSIPATED IN DEFORMING THE ABSORBER IN.LB.
C              ACC=ACCELERATION X G
C              STL=STEEL MILD OR LOW CARBON
C              SST=STAINLESS STEEL 300 SERIES
C              ALUM=ALUMINUM TYPE 6061-T6
C              DE=STRAIN IN./IN.
C              DS=STRAIN IN./IN.
C              AMATL=ABSORBER MATERIAL
C              WT=CASK WEIGHT LB.
C              RAD=ABSORBER RADIUS IN.
C              THK=ABSORBER THICKNESS IN.
C              TLEN=ABSORBER LENGTH IN.
C              DEPH=ABSORBER DEPTH IN.
C              AREA=ABSORBER AREA SQ.IN.
C              DL=CHANGE IN ABSORBER LENGTH IN.
C              A,B,C,D,E,E,G,H,O,P,Q,R=CONSTANTS IN THE STRESS EQUATION
C              HT=DROP HEIGHT IN.
C              UT=CASKS TOTAL POTENTIAL ENERGY IN.LB.
C
      DIMENSION  DE(200),S(200),DEF(200),DU(200),FORC(200),ENER(200),
     2 ACC(200)
 1001 FORMAT (1H0)
 1002 FORMAT(1H ,1X,49H*************************************************,
     1       55H*******************************************************,
     2       14H**************)
 1003 FORMAT(1H ,23X,24HENERGY ABSORBER GEOMETRY)
 1004 FORMAT(1H ,12X,6HRADIUS,3X,9HTHICKNESS,3X,5HDEPTH,4X,6HLENGTH,5X,
     1    4HAREA)
 1005 FORMAT(1H ,F18.3,4F10.3)
 1006 FORMAT (1H ,16X,33HCASK GEOMETRY AND TEST CONDITIONS)
 1007 FORMAT(1H ,12X,11HCASK WEIGHT,3X,11HDROP HEIGHT,3X,9HPOTENTIAL,
     1       X, 6HENERGY)
 1008 FORMAT(1H ,F21.1,F14.1,F17.1)
 1009 FORMAT (1H , 1X,12HACCELERATION,2X,11HDEFORMATION,6X 5HFORCE,6X,
     1    6HSTRESS,6X,6HSTRAIN,8X,6HENERGY)
 1010 FORMAT (1H , 5X,3HX G,10X,6HINCHES, 9X,4HLBS.,7X,4HPSI., 9X,
     1    5HIN/IN,9X,5HLB-IN)
 1011 FORMAT (1H ,F10.1,F13.3,F16.1,F12.1,F11.3,F12.1)
      DO 7, I=1,200
      DE(I)=0.0
      S(I)=0.0
      DEF(I)=0.0
      DU(I)=0.0
      FORC(I)=0.0
      ENER(I)=0.0
```

```
    7 ACC(I)=0.0
      SST=1.0
      STL=2.0
      ALUM=3.0
   60 EE=.005
      DS=0.0
C  INPUT ABSORBER MATERIAL
   88 AMATL=STL
C  INPUT RADIUS
   70 RAD=0.0
C  INPUT ABSORBER LENGTH
   73 TLEN=2.*8.
C  INPUT CASK WEIGHT
   80 WT=16000.
C  INPUT THICKNESS
   71 THK=2.0
C  INPUT ABSORBER DEPTH
   72 DEPH=5.5
C  INPUT ABSORBER AREA
   74 AREA=0.0
C   INPUT CASK IDENTIFICATION
 1000 FORMAT(1H ,8X,'O. R. N. L. LOOP TRANSPORT CASK IMPACT ON SIDE')
C  INCREMENT DEFORMATION
      DL=EE*DEPH
      PHI=3.14159265
      IF(RAD .GT. 0.) AREA=2.*RAD*PHI*THK
      IF(TLEN .GT. 0.) AREA=TLEN*THK
C  INPUT DROP HEIGHT
      IF(AMATL.NE.2.0) GO TO 6
C   MILD STEEL COEFFICIENTS
      A=-4.36337724E+02
      B=3.52674012E+06
      C=-5.84344912E+07
      D=8.44752080E+08
      E=-1.00790838E+10
      F=8.32241264E+10
      G=-4.42875864E+11
      H=1.50685484E+12
      O=-3.25535392E+12
      P=4.31754272E+12
      Q=-3.20487884E+12
      R=1.01910658E+12
      AA=0.5
      AB=345000.
      AC=73000.
    6 CONTINUE
      IF(AMATL.NE.1.0) GO TO 5
C   STAINLESS STEEL COEFICIENTS
      A=-6.60046824E+02
      B=3.27884020E+06
      C=-1.74360076E+08
      D=5.78280072E+09
      E=-9.29116096E+10
      F=8.46509048E+11
      G=-4.79173280E+12
      H=1.75760146E+13
      O=-4.20115552E+13
```

```
      P=6.33579656E+13
      Q=-5.48432768E+13
      R=2.07901540E+13
      AA=0.35
      AB=642000.
      AC=50300.
    5 CONTINUE
      IF(AMATL.NE.3.0) GO TO 12
      A=-2.37529992E+02
      B=8.77222216E+05
      C=-2.10395908E+07
      D=7.92526976E+08
      E=-1.19710816E+10
      F=9.28522728E+10
      G=-4.24976496E+11
      H=1.21919694E+12
      O=-2.22403424E+12
      P=2.51118460E+12
      Q=-1.60332062E+12
      R=4.43286884E+11
      AA=0.5
      AB=209100.
      AC=27900.
   12 CONTINUE
      HTA=48.
      IF(WT.GE.10000.) HTA=36.0
      IF(WT.GE.20000.) HTA=24.0
      IF(WT.GE.30000.) HTA=12.0
      HTB=360.
      DO 20 N=1,2
      HT=HTA
      IF(N .EQ. 2) HT=HTB
      UT=WT*HT
      SUMU=0.0
      DS=0.
      DO 1 I=1,200
      DE(I)=DS
      DEF(I)=DE(I)*DEPH
      IF(DS.GT.AA) GO TO 21
C  STRESS EQUATION
      S(I)=A+(B*DS)+(C*DS*DS)+(D*(DS**3.))+(E*(DS**4.))+(F*(DS**5.))+
     1 (G*(DS**6.))+(H*(DS**7.))+(O*(DS**8.))+(P*(DS**9.))+
     2 (Q*(DS**10.))+(R*(DS**11.))
   21 CONTINUE
      IF(DS.LE.AA) GO TO 22
      STRS=(AB*DS)+AC
   22 CONTINUE
C  COMPUTE FORCE
      FORC(I)=S(I)*AREA
C  COMPUTE ACCELERATION
      ACC(I)=FORC(I)/WT
C  COMPUTE ENERGY
      DU(I)=FORC(I)*DL
      SUMU=SUMU+DU(I)
      ENER(I)=SUMU
      DS=DS+EE
      IF(ENER(I).GE.UT) GO TO 2
```

```
 1 CONTINUE
 2 CONTINUE
   J=I
   WRITE (6,1002)
   WRITE (6,1002)
   WRITE (6,1001)
   WRITE (6,1000)
   WRITE (6,1001)
   WRITE (6,1002)
   WRITE (6,1002)
   WRITE (6,1001)
   WRITE  (6,1003)
   WRITE (6,1001)
   WRITE (6,1004)
   WRITE (6,1001)
   WRITE(6,1005) ,RAD,THK,DEPH,TLEN,AREA
   WRITE (6,1001)
   WRITE (6,1002)
   WRITE (6,1001)
   WRITE (6,1006)
   WRITE (6,1001)
   WRITE (6,1007)
   WRITE (6,1001)
   WRITE (6,1008)WT,HT,UT
   WRITE (6,1001)
   WRITE (6,1002)
   WRITE (6,1002)
   WRITE (6,1001)
   WRITE (6,1009)
   WRITE (6,1001)
   WRITE (6,1010)
   WRITE (6,1001)
   DO 10 I=1,200
   WRITE(6,1011) ,ACC(I),DEF(I),FORC(I),S(I) ,DE(I),ENER(I)
   IF(I.GE.J) GO TO 11
10 CONTINUE
11 CONTINUE
   WRITE (6,1001)
   WRITE (6,1001)
   WRITE (6,1002)
   WRITE (6,1002)
   WRITE (6,1002)
   WRITE (6,1002)
   WRITE (6,1002)
   WRITE (6,1002)
   WRITE (6,1001)
   WRITE (6,1001)
   CALL QWIKPL(DEF,ACC,J,'LINEAR','J.H.EVANS$')
   CALL QWIKPL(DEF,ENER,J,'LINEAR','J.H.EVANS$')
   CALL QWIKPL(ACC,ENER,J,'LINEAR','J.H.EVANS$')
20 CONTINUE
   STOP
   END
```

C.4 Program 1018 CASK

The 1018 CASK computer program was written to compute the response of a cylindrical cask with lead biological shielding clad with steel to impact on protrusions, such as lifting lugs, located radially on the outer shell of the cask. The listing for this computer program is given here.

```
**FTN,L,E,G.
C                    PROGRAM 1018 CASK
C
      THIS PROGRAM COMPUTES THE RESPONSE OF A CLAD LEAD SHIELDED CASK
C     IMPCACTING ON A PROTRUSION SUCH AS A LIFTING LUG THE PROTRUSIONS
C     ARE LOCATED RADIALLY ON THE CASK SHELL AND REMOVED FROM BRACING
C     CODED  BY JOHN EVANS P.E. OAK RIDGE NATIONAL LABROTORY JANUARY 1975
C
C                      GLOSSARY  OF  NOTATION
C
C           STEEL=LOW CARBON OR MILD STEEL
C           SST=300 SERIES STAINLESS STEEL
C           T=SHELL THICKNESS IN.
C           DX=DEFLECTION INCREMENT IN.
C           W=CASK WEIGHT LB.
C           G=GRAVITATIONAL CONSTANT
C           A=LUG LENGTH IN.
C           C=LUG WIDTH  IN.
C           B,D=DEFORMED DIMENSIONS IN.
C           H=DROP HEIGHT IN.
C           UT=CASK POTENTIONAL ENERGY IN-LB.
C           CA,CB=COEFICIENTS IN THE STRESS EQUATIONS
C           S=IDEAL DYNAMIC COMPRESSIVE YEILD STRESS FOR LEAD PSI
C           X=DEFLECTION IN.
C           QI=NUMBER OF LUGS
C           Y=DEFLECTION IN.
C           ACC=ACCELERATION X G
C           VL=VOLUME OF LEAD DISPLACED CU. IN.
C           UL=ENERGY ABSORBED IN THE LEAD IN. LB.
C           XY,XX=ELONGATION OF THE SHELL IN.
C           EY,EX=STRAIN IN THE SHELL IN./IN.
C           SX,SY=STRESS IN THE SHELL PSI
C           AY,AX=CROSS SECTIONAL SHELL AREA BEING STRESSED SQ. IN.
C           US=ENERGY DISSIPATED IN DEFORMING THE SHELL IN. LB.
C           U=ENERGY IN. LB.
C           F=FORCE LB.
C           OX,OY=ANGLES OF DEFORMATION IN THE SHELL
C           PX,PY=FORCES ON THE SHELL LB.
C           PL=FORCE IN THE LEAD LB.
C           P=TOTAL FORCE LB.
C
      DIMENSION Y(200),U(200),F(200),ACC(200),P(200)
 1000 FORMAT (1H ,30X,'O.R.N.L. LOOP TRANSPORT CASK')
 1001 FORMAT (1H0)
 1002 FORMAT (1H,4X,'CASK',11X,'SHELL',9X,'LUG',10X,'LUG',10X,'SHELL')
 1003 FORMAT (1H, 3X,'WEIGHT',8X,'THICKNESS',5X,'LENGTH',8X,'WIDTH',7X,
     1        'MATERIAL')
 1004 FORMAT (1H, 3X,'POUNDS',9X,'INCHES',7X,'INCHES',7X,'INCHES')
 1050 FORMAT(F10.1,F13.3,2F13.2,8X,'STEEL')
 1051 FORMAT(F10.1,F13.3,2F13.2,6X,'STAINLESS')
 1006 FORMAT (1H,11X,'DROP',12X,'DYNAMIC YIELD',17X,'CASK')
 1007 FORMAT (1H,10X,'HEIGHT',10X,'STRESS OF LEAD',11X,'POTENTIAL ENERGY
     1')
 1008 FORMAT (1H,10X,'INCHES',15X,'PSI',22X,'IN-LB')
  009 FORMAT (F16.1,F19.1,F28.1)
 1010 FORMAT(1H,9X,'DEFLECTION',3X,'DEF. ENERGY',9X,'FORCE',11X,
     1          'ACCELERATION')
```

```
 1011 FORMAT(1H,11X,'INCHES',8X'IN-LB',12X,'POUNDS',14X,'X(G) ')
 1012 FORMAT (F16.2,F16.1,3F17.1)
      STEEL=1.0
      SST=2.0
C    INPUT SHELL MATL.,HOT ROLLED,LOW'CARBON ECT.=STEEL, STAINLESS STEEL=SST
      SMATL=STEEL
C  INPUT SHELL THICKNESS
      T=.69
C    INPUT DEFLECTION INCREMENT
      DX=.05
C    INPUT CASK WEIGHT
      W=16000.
      G=32.
C    INPUT LUG DIMENSIONS (LENGTH=A & WIDTH=C)
      A=12.
      C=4.
      B=.8*A
      D=.8*C
C    INPUT NO. OF LUCS
      QL=2.0
C  INPUT DROP HEIGHT
      HTA=48.
      IF (W.GE.10000.) HTA=36.0
      IF (W.GE.20000.) HTA=24.0
      IF (W.GE.30000.) HTA=12.0
      HTB=360.
      IF(SMATL.NE.1.0  ) GO TO 8
C    MILD STEEL COEFICIENTS
      CA=73000.
      CB=345000.
    8 CONTINUE
      IF(SMATL.NE.2.0) GO TO 9
C    STAINLESS STEEL COEFICIENTS
      CA = 50300.0
      CB = 642000.0
    9 CONTINUE
      WRITE(6,1001)
      WRITE(6,1001)
      WRITE(6,1000)
      WRITE(6,1001)
      WRITE(6,1002)
      WRITE(6,1003)
      WRITE(6,1004)
      IF(SMATL.NE.1.0  ) GO TO 31
      WRITE(6,1050) W,T,A,C
   31 IF(SMATL.NE.2.0) GO TO 32
      WRITE(6,1051) W,T,A,C
   32 CONTINUE
      DO 4 N=1,2
      H=HTA
      IF(N .EQ. 2) H=HTB
C    CALCULATE CASK POTENTIAL ENERGY
      UT= W*H
      DO 4 M=1,2
     INPUT IDEAL DYNAMIC YIELD STRESSES FOR LEAD
      S=6000.
      IF(M.EQ.2) S=14000.
```

```
      XX=0.0
      XY=0.0
      WRITE(6,1001)
      WRITE(6,1006)
      WRITE(6,1007)
      WRITE(6,1008)
      WRITE(6,1009)   H,S,UT
      DO 6 I=1,200
      Y(I)=0.0
      U(I)=0.0
      F(I)=0.0
      P(I)=0.0
    6 ACC(I)=0.0
      DO 1 I=1,200
      X=(DX*I)-DX
C  X=DELTA
      Y(I)=X
C     CALCULATE VOLUME DISPLACED
      VL=X*((A*C)+(C*B)+(A*D)+((4.*B*D)/3.))
C     CALCULATE ENERGY ABSORBED IN LEAD
      UL=S*VL
      IF(X.EQ.0.0) GO TO 2
C     CALCULATE ELONGATION OF THE CASK SHELL IN X AND Y DIRECTIONS
      XY=2.*((SQRT((D*D)+(X*X)))-D)
      XX=2.*((SQRT((B*B)+(X*X)))-B)
    2 CONTINUE
C     CALCULATE STRAIN IN CASK SHELL IN X AND Y DIRECTIONS
       EY =XY/(2.*D)
       EX=XX/(2.*B)
C     CALCULATE STRESS IN THE CASK SHELL IN THE X AND Y DIRECTIONS
      SX=CA+(EX*CB)
      SY=CA+(EY*CB)
C     CALCULATE MEAN CROSS SECTIONAL AREA UNDER STRESS
      AY=T*(A+B)
      AX=T*(C+D)
C     CALCULATE ENERGY ABSORBED IN SHELL
      US=(CA+(CB/2.)*EY)*XY*AY+(CA+(CB/2.)*EX)*XX*AX
C     SUN SHELL ENERGY & LEAD ENERGY
      U(I)=QL*(UL+US)
      IF(X.EQ.0.0) GO TO 3
C     CALCULATE FORCE
      F(I)=(U(I)-UU)/DX
    3 CONTINUE
      UU=U(I)
C     CALCULATE ACCELERATION
      ACC(I)=F(I)/W
      IF(U(I).GE.UT) GO TO 5
    1 CONTINUE
    5 CONTINUE
      WRITE(6,1010)
      WRITE(6,1011)
      K=I
      DO 7 I=1,K
      WRITE (6,1012)Y(I),U(I),F(I),ACC(I)
    7 CONTINUE
      CALL QWIKPL(U,ACC,K,'LINEAR','J.H.EVANS$')
      CALL QWIKPL(U,Y,K,'LINEAR','J.H.EVANS$')
```

```
4 CONTINUE
  STOP
  END
```

Appendix D

SPECIFICATION 2R CONTAINER TEST REPORT

SPECIFICATION 2R CONTAINER TEST REPORT

The design and fabrication of typical Specification 2R containers used at ORNL are discussed in Sect. 1.8. Two Specification 2R inner containers of the type used in the ORNL shipping cask D-38 were tested to establish the adequacy of this type of container as the primary containment vessel for radioactive materials. These tests and their results were outlined by L. B. Shappert and B. B. Klima in the SARP for cask D-38 (ORNL/TM-2200), and an excerpt from that report is presented here. The figure numbers were changed for compatibility.

Two Specification 2R containers were drop tested to establish their ability to maintain containment after a 30-ft free drop and impact. Each container was placed inside a sleeve to simulate the condition of the container inside the cask during the free drop and subsequent impact. The sleeves consisted of a length of sched-40 stainless steel pipe with a 0.280-in.-thick plate welded over one end. The inner containers and their sleeves are shown in Fig. D.1. before testing.

Prior to drop testing, both containers were leak tested and found to be leak-tight at a pressure of 25 psig. Both containers weighed 19 lb when empty, and each was loaded with 25 lb of solids to bring the total weight of the dropped unit to 44 lb. Testing of the containers consisted of two 30-ft drops. The first drop was made in such a manner that the bottom of the container and sleeve impacted flat on the drop surface. The inner container and drop sleeve after the first test are shown in Fig. D.2. This container impacted at an angle of 0° with the drop surface and sustained almost no visible damage.

The second drop was made with the bottom of the container and drop sleeve at an angle of 20° from the horizontal so that the center of gravity of the container was directly above the impacting corner. The inner container and drop sleeve used in the second drop are shown in Figs. D.3 and D.4. This sleeve and container impacted at an angle of 20° with the drop surface, and a flattening of the drop sleeve is evident. Although the inner container was polished a little below the weld area as a result of the impact, it sustained no damage.

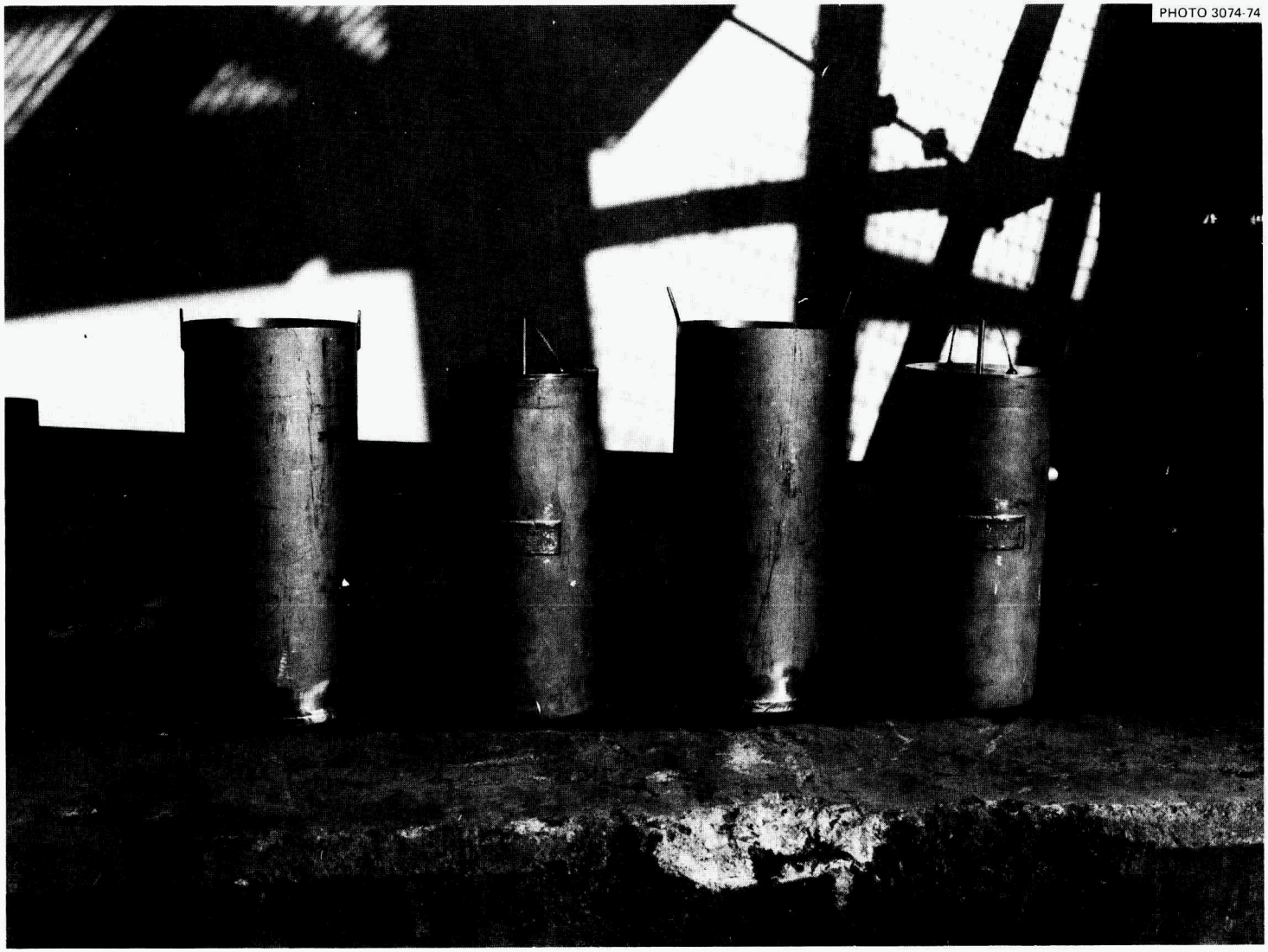

Fig. D.1. Inner containers and sleeves before testing.

Fig. D.2. Model after first test.

Fig. D.3. Model after second test.

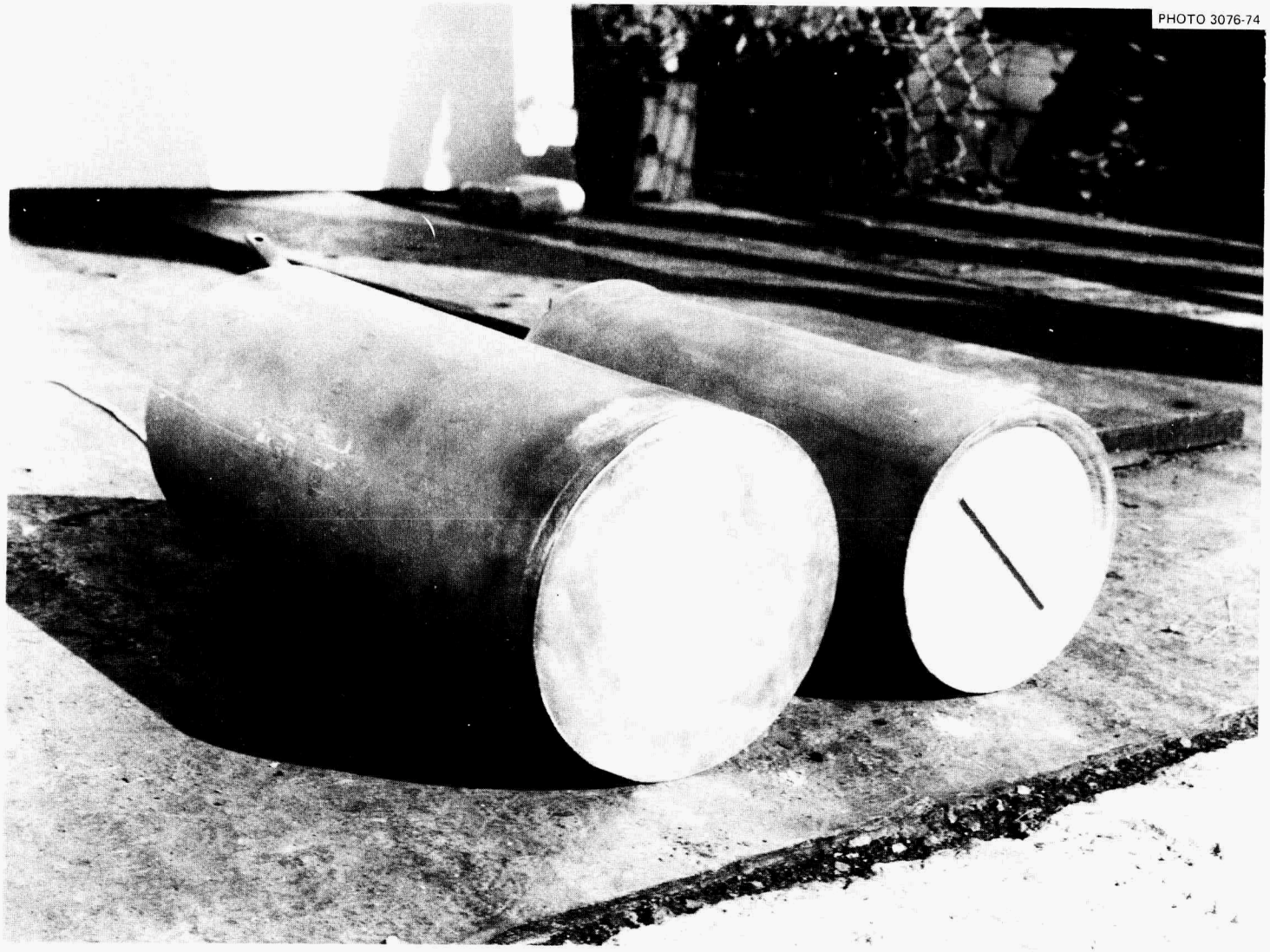

Fig. D.4. Model after second test.

Both containers were leak tested after the drop tests and were found to be leak-tight at a pressure of 25 psig. It was therefore concluded that these inner containers met the requirements of the regulations for the 30-ft free-drop accident condition and were adequate to provide primary containment of radioactive materials to be shipped in the ORNL shipping cask D-38.

Appendix E

OPERATING PROCEDURES AND CHECKLISTS

INTRA-LABORATORY CORRESPONDENCE

OAK RIDGE NATIONAL LABORATORY

August 19, 1971

To: 3026D and 3525 Cell Memo Books

Subject: Casks Used for Off-site Shipment of Radioactive Materials

Shielding casks used for off-site shipment of radioactive material must be DOT approved. The casks must be maintained in a good state of repair. Inspection check lists have been made for use prior to each shipment. Also, a more detailed inspection is scheduled on a periodic (approximately annual) basis and a check list has been made for this. Many of the radioactive materials coming to ORNL are shipped by others (such as Idaho Nuclear, Army) in our casks; loading procedures for Hot Cell Operations casks have been developed for their use. These inspection check lists and loading procedures follow and are a part of this memo:

1. Loop Transport Cask Inspection Sheet
2. Loop Transport Cask Annual Inspection Sheet
3. Loop Transport Cask Underwater Loading Procedure
4. Loop Transport Cask Horizontal Loading Procedure
5. In-Pile Capsule Shipping Cask Inspection Sheet
6. In-Pile Capsule Shipping Cask Annual Inspection Sheet
7. In-Pile Capsule Shipping Cask Underwater Loading Procedure
8. In-Pile Capsule Shipping Cask Horizontal Loading Procedure

A. G. Walker
Operating Supervisor

E. M. King
Department Superintendent

J. Lehr
Division Superintendent

Inspection Sheet

Date _____

Prior to each shipment, the following items shall be checked to ensure that all parts are in good condition, firmly attached, and cask is properly sealed.

	Indicate Satisfactory with (✓)
BEFORE LOADING	
1. Sliding Door End	
a. Visual check of sealing surface on cask and plug (item 4).	_____
b. Gasket (item 2) in good condition.	_____
c. All cap screws (item 3) are self-locking type.	_____
d. Tamper seal holes in at least two cap screws of fire shield.	_____
e. Fire shield in good condition, including cap screws and holes.	_____
2. Sliding Door Cover (item 10)	
a. Gasket (item 11) good condition.	_____
b. All cap screws (item 12) in position and tight.	_____
c. Pipe cap (item 29) gasket in good condition.	_____
3. Plug End (item 17)	
a. Visual check of sealing surface on cask and end plug (item 17).	_____
b. Gasket (item 15) in good condition.	_____
c. Lead filler plug gasket (item 19) in good condition..	_____
d. All cap screws (item 16) are self-locking type.	_____
e. Tamper seal holes in at least two cap screws of fire shield.	_____
f. Fire shield in good condition, including cap screws and holes.	_____
AFTER LOADING	
4. Door plug lock (item 4) seated firmly and cap screws (item 3) tight.	_____
5. Pipe cap (item 29) seated firmly.	_____
6. End plug (item 17) seated firmly and cap screws (item 16) tight.	_____
7. Lead filler plug (item 20) in place and cap screws (item 18) tight.	_____
8. Pressure test: with 5 psi air on cavity of cask, soap-bubble check all gasketed flanges for leaks:	_____
a. No leaks at door plug lock (item 4).	_____
b. No leaks at sliding door cover (items 10 and 29).	_____
c. No leaks at end plug (items 17 and 20).	_____
d. Pressure bled off; pipe plug and pipe cap of pressure test connection (item 35) in place and tightened.	_____
9. Cask bolted securely (item 7) to skid.	_____
10. Filler blocks (item 14) in position.	_____
11. Cask cleaned, radiation tag attached: cask meets shipping tolerances.	_____
12. Fire shield at each end bolted in place (14 cap screws in each end).	_____

Inspected by: _____ Approved by: _____

LOOP TRANSPORT CASK

Annual Inspection Sheet

Date:_____

The following annual inspection shall be performed to assure the cask meets the requirements as specified by the DOT approval. Annual inspection is to be performed by Hot Cell Operations and Inspection Engineering personnel.

1. Prepare cask for inspection by removing ends and top of fire shield. (Cask should be checked by Health Physics so components handled are at acceptable radiation and contamination limits.)

	Condition Good	Ba
2. Fire shield, screws and holes.	____	____
3. Sliding Door Section		
a. Cap screws (self-locking type-item 3) and capscrew holes.	____	____
b. Gasket (item 2).	____	____
c. Gasket sealing surface on cask.	____	____
d. Door plug lock (item 4) sealing surface.	____	____
e. Door plug (item 24) slides freely into position in cavity, when sliding door is closed.	____	____
f. Door plug lock (item 4) slides freely into poisition and seats firmly against cask.	____	____
4. Sliding Door Cover (item 10) Section		
a. Gasket (item 11).	____	____
b. Cap screws (item 12) and cap screw holes.	____	____
c. Sliding door (item 5) opens and closes freely.	____	____
d. Pipe cap (item 29) seating surface.	____	____
e. Pipe cap gasket.	____	____
5. End Plug (item 17) Section		
a. Gasket (item 15).	____	____
b. Cap screws (self-locking type - item 16) and cap screw holes.	____	____
c. End Plug (item 17) seating surface.	____	____
d. Gasket seating surface on cask.	____	____
e. End plug slides freely and seats firmly into cask.	____	____
f. Filler plug gasket (item 19).	____	____
g. Filler plug cap screws (item 18) and cap screw holes.	____	____
h. Lead filler plug (item 20) fits freely and firmly into cask.	____	____

	Condition Good	Bad
6. With sliding door open and end plugs removed, pressure test the shell at 5 psi.	_____	_____
Leak check (soap bubble) screw holes at both ends and welds at each end of cavity. Repair any leaks.	_____	_____
7. Visually inspect all welds for cracks and other damage.	_____	_____
8. Reassemble components of cask when they meet acceptable standards. Apply 3 to 5 lbs per sq. in. pressure test on cask cavity. Soap-bubble check for leaks at all gasketed areas. Make any necessary repairs in a manner to assure that cask can be successfully leak tested consistently.	_____	_____
9. Replace fire shield, top and ends	_____	_____
10. All needed repairs and final inspection completed.	_____	_____

Cask deemed to be in good condition and certified for use by:

_____
(Hot Cell Operator) Date

_____
(Inspection Engineering Dept.) Date

_____
(Hot Cell Operations Supervisor) Date

E. M. King or A. A. Walls
FTS 615-483-1672
Comm Tel. 615-483-8611
Ext. 3-1672

OAK RIDGE NATIONAL LABORATORY

LOOP TRANSPORT CASK

INSTRUCTIONS FOR UNDER-WATER LOADING

DOT Special Permit 5753
Weight: 16,000 lb

Assembly Dwg. No. M1109EL009D-2
Cavity 5 3/4 in. diam x 66 in. long

Normally, the cask is loaded vertically in a pool with the plug end at the top and the drawer end at the bottom. References are made to ORNL Dwg. HCO-1068-517.

1. Remove the filler blocks (item 14) from the vertical lifting trunnions. (Save blocks for reinstallation later).
2. Remove top and end fire shields.
3. Remove the cap screws (item 3) on the drawer end. (Cap screws are self-locking type).
4. Pull door plug lock (item 4) back as far as it will go; lift the door plug lock upward to unhook the lock bolt from the sliding door plug (item 24) and pull straight out to remove. Remove plug (item 4) and gasket (item 2). (This allows the cask to drain when it is removed from the pool.)
5. Remove nuts (item 7) holding cask to skid, remove cask from skid and lower fire shield.
6. Tilt the cask to the vertical position and move it to the pool.
7. Remove the cap screws (item 16) that fasten the end plug before lowering the cask into the pool. (Cap screws are self-locking type.)
8. Lower the cask into the pool and remove the end plug and gasket (item 17 and 15). Keep track of the gasket.
9. Lift liner out by the bail; remove lid from the liner.
10. Load the irradiated materials into the liner.
11. Replace the lid on the liner. (The lid is necessary for horizontal unloading at ORNL.)
12. Load liner containing the irradiated materials into the cask.
13. Replace the gasket and end plug (items 15 and 17) and raise the cask until the cap screws can be installed.
14. Install the cap screws to fasten the end plug into place.
15. Raise the cask out of the pool and allow it to drain for 15 minutes.
16. Move the cask to the shipping area and tilt it to a horizontal position. Elevate the plug end of the cask about 6 in. and allow any residual water to drain out the sliding door end for about 15 min. (CAUTION -- all water must be drained from the cask for shipment.)
17. Replace gasket (item 2). Insert door plug lock bolt (item 4) into door plug (item 24). Push forward as far as it will go. Replace cap screws.
18. Tighten cap screws (item 3 and 16) in flanges on both ends of cask. (Cap screws must be self-locking type.)
19. Using the pressure test connection (item 35), pressure the cask with air to about 3 to 5 psi and check (soap bubble test) all gasketed flanges for leaks. After determining that there are no leaks, bleed off pressure, replace pipe plug and cap on pressure-test connection and tighten.
20. Make radiation and smear survey to confirm acceptability for shipping.
21. Replace cask on skid with lower fire shield in place, replace nuts (item 7).

    Replace top and end fire shields.
23. Secure filler blocks (item 14) in place around vertical lifting trunnions. (These blocks must be in place to meet the drop-puncture requirements outlined in AECM-0529).
24. Install tamper wires through holes in cap screws of fire shield on each end of cask.

E. M. King or A. A. Walls
FTS 615-483-1672
Comm Tel. 615-483-8611
Ext. 3-1672

OAK RIDGE NATIONAL LABORATORY

LOOP TRANSPORT CASK

INSTRUCTIONS FOR HORIZONTAL LOADING

DOT Special Permit 5753
ght: 16,000 lb

Assembly Dwg. No. M11109EL009D-2
Cavity 5 3/4 in.diam x 66 in. long

These instructions are for horizontal loading of this cask at facilities equipped for port loading. References are made to ORNL Dwg. HCO-1068-517. The skid may be removed or left attached during loading. If desired, remove skid from cask by removing the top fire shie and the eight hex nuts (item 7).

1. Remove fire shield at each end of Cask (14 cap screws on each end).
2. Remove the cap screws (item 3) on the drawer end.
3. Pull door plug lock (item 4) back as far as it will go; lift the door plug lock upward to unlock the lock bolt from the sliding door plug (item 24) and pull straight out to remove. Remove plug (item 4) and gasket (item 2). (This operation pulls extended portion of door plug from inside cavity. Check to make sure exposed surface of door plug is flush with sliding door; it must be flush before attempting to open sliding door, or door plug will bind inside cavity).
4. Move cask into position at loading port.
5. Remove pipe cap (item 29) from drawer end.
6. Open sliding door (item 5) by turning door screw (item 25) counterclockwise.
7. Remove screws, gasket, lead filler plug, and O-ring (items 18, 19, and 20) from plug end.
8. Take necessary steps to open loading port to cell.
9. Using approximately 3/8 in. diam rod inserted into plug hole, push empty liner into cell. (If liner is outside of cask, it may be placed in cell as a separate operation.)
10. Remove lid from liner; load material to be shipped into liner.
11. Replace the lid on the liner. (The lid is necessary for unloading at ORNL.)
12. Remotely push or pull liner into cask; ensure liner clears sliding door.
13. Replace gasket, lead filler plug, and screws (items 18, 19, and 20).
14. Close sliding door (item 5) by turning door screw (item 25) clockwise.
15. Replace pipe cap (item 29) on drawer end.
16. Close cell loading port and move cask away from loading port.
17. Replace gasket (item 2). Insert door lock bolt (item 4) into door plug (item 24). Push forward until it seats. Replace cap screws; each screw must have a lock washer.
18. Tighten cap screws (items 3, 16, and 18) in flanges on both ends of cask.
19. Using the pressure-test connection (item 35), pressurize the cask with air to 3 to 5 psi and check (soap bubble test) all gasketed flanges for leaks. After determining that there are no leaks, bleed off pressure, replace pipe plug and cap on pressure-test connection and tighten.
20. Perform a radiation survey to determine the acceptability for shipping, decontaminate as needed.
21. Be sure filler blocks (item 14) are in place around vertical lifting trunnions. (These blocks must be in place during shipment to meet the drop-puncture requirements outlined in AECM-0529).
22. Replace fire shield on each end (14 cap screws on each end).
23. Install tamper wires through holes in cap screws of fire shield on each end of cask.

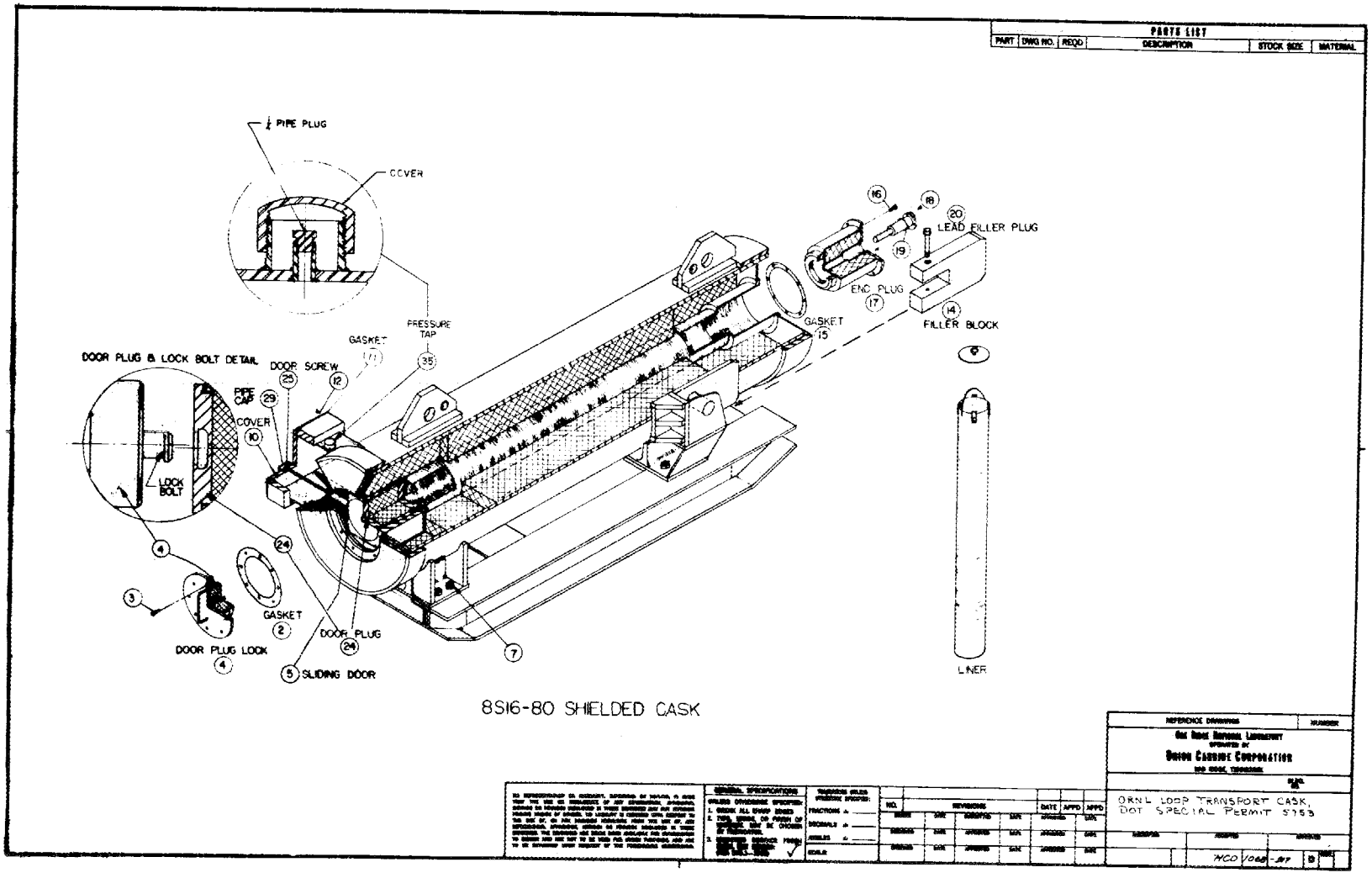
PARTS LIST
PART
DWG NO.
REQD
DESCRIPTION
STOCK SIZE
MATERIAL
1/4 PIPE PLUG
COVER
PRESSURE TAP
35
GASKET
11
DOOR PLUG & LOCK BOLT DETAIL
DOOR SCREW
25
12
PIPE CAP
29
COVER
10
LOCK BOLT
4
24
3
GASKET
2
DOOR PLUG LOCK
4
DOOR PLUG
24
5 SLIDING DOOR
7
16
18
20
LEAD FILLER PLUG
19
END PLUG
17
GASKET
15
14
FILLER BLOCK
LINER
8S16-80 SHIELDED CASK
REFERENCE DRAWINGS
NUMBER
OAK RIDGE NATIONAL LABORATORY
OPERATED BY
UNION CARBIDE CORPORATION
ORNL LOOP TRANSPORT CASK,
DOT SPECIAL PERMIT 5753
HCO 1040-87
B

3020D Memo No. 21
3525 Memo No. 26

INTRA-LABORATORY CORRESPONDENCE

OAK RIDGE NATIONAL LABORATORY

April 22, 1974

To: Hot Cell Memo Book

Subject: Preparation of Radioactive Materials Packaging Information for Offsite Shipments

Form "Oak Ridge National Laboratory Radioactive Materials Packaging Information" must be prepared for all offsite shipments containing greater than one millicurie alpha or three curies beta-gamma solid, liquid, or gas. The person requesting the shipment must furnish and certify the information requested under General Information, Radioactive Contents, and Shipping Container. We must furnish and certify the information requested under Internal Container and External Container, except for the tamper seal. Health Physics will provide the Radiation Survey.

The filled-in (to this point) form is to be transmitted to the Isotopes Sales Dept. in the Isotopes Division -- along with the loaded container. The Isotopes Division is responsible for providing the tamper seal arranging tie-down inspection, and final approval of the shipment.

A copy of the form is attached.

Operating Supervisor

Operating Supervisor

E. M. King
Department Supt.

Division Supt.

OAK RIDGE NATIONAL LABORATORY RADIOACTIVE MATERIALS PACKAGING INFORMATION

THIS FORM IS REQUIRED FOR ALL SHIPMENTS GREATER THAN 1 MILLICURIE ALPHA OR 3 CURIES BETA/GAMMA SOLID, LIQUID, OR GAS AND ALL EMPTY RETURNABLE CONTAINERS

GENERAL INFORMATION

1. Origin (Division) | 2. Destination
3. Method of Transport | 4. Weight
5. Special Instructions

Special Instructions Complied by

RADIOACTIVE CONTENTS

1. All major activities in curies and/or grams-

2. Specify (a) ☐ Normal Form (b) ☐ Special Form Special Form No. _____

(c) ☐ Fissile (d) ☐ Non-Fissile

3. Radioactive Material Form: ☐ Solid ☐ Liquid ☐ Gas

4. Heat Load (watts): Calculated _____ Estimated _____ By _____

SHIPPING CONTAINER

1. Certificate of Compliance No. USA–
2. DOT Specification No. 3. Nuclear Safety Review No.
4. Container determined proper for contents by Date

INTERNAL CONTAINER

1. Internal Containment: ☐ Glass Bottle ☐ Plastic Bottle ☐ "2R" ☐ Conoseal ☐ Welded Capsule (specify capsule material) _____
☐ Other (explain) _____

2. Contamination level on internal container: Estimated _____ Smeared _____
Radiation level from internal container: Measured _____ Calculated _____
Gaskets or seals (valves) properly installed _____ By _____
5. Leak tests of internal container _____ By _____

EXTERNAL CONTAINER

1. Moderator and neutron absorber present for fissile material? ☐ Yes ☐ By _____
2. External container examination _____ ☐ Yes ☐ By _____
3. Gaskets or seals properly installed _____ ☐ Yes ☐ By _____
4. Leak test _____ ☐ Yes ☐ By _____
5. Bolts torqued to _____ ft. lbs. By _____
6. Tie down to skid checked _____ ☐ Yes By _____
7. Tamper seal installed _____ ☐ Yes ☐ By _____
8. Lid eye bolt removed and wired to the outside of the carrier ☐ Yes By _____

RADIATION SURVEY

1. Surface contamination level: Alpha _____ dpm; $\beta^2 - \gamma$ _____ dpm
2. External radiation level _____ mrem/hr @ contact
3. Domestic shipments _____ mrem/hr @ 3 ft from surface
4. Foreign shipments _____ mrem/hr @ 1 meter from center
5. Health Physics Surveyor _____ Date _____

TRUCK TIE-DOWN AND SHORING

1. Tie-down and shoring in accordance with SARP and Designed Layout checked by (Inspection Engineering) _____

Shipment Approved By	Date

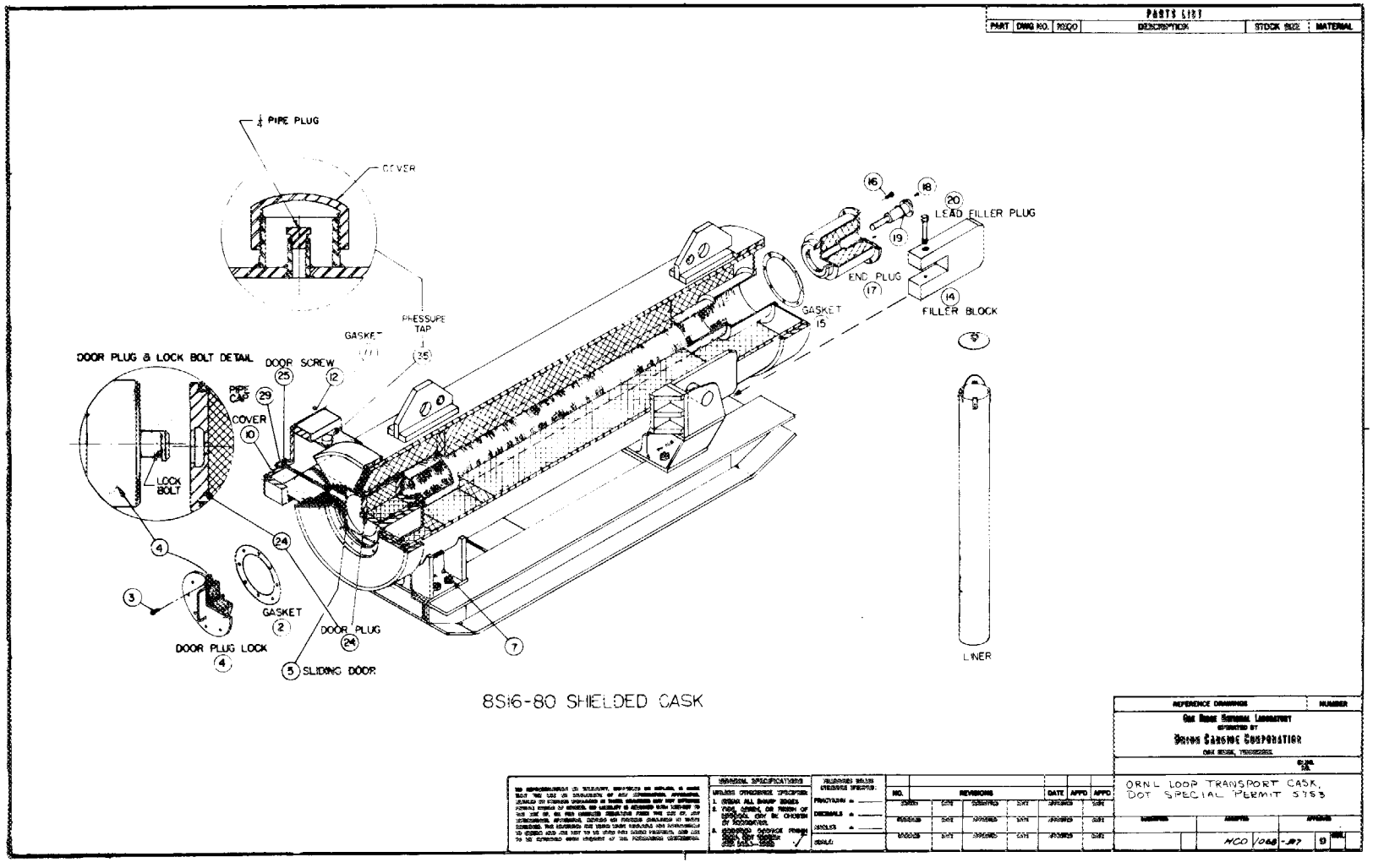
PARTS LIST
PART
DWG NO.
DESCRIPTION
STOCK SIZE
MATERIAL
1/4 PIPE PLUG
COVER
PRESSURE TAP
GASKET
(35)
DOOR PLUG & LOCK BOLT DETAIL
DOOR SCREW
(25)
(12)
PIPE CAP
(29)
COVER
(10)
LOCK BOLT
(4)
(24)
(3)
GASKET
(2)
DOOR PLUG
(24)
DOOR PLUG LOCK
(4)
(5) SLIDING DOOR
(7)
(16)
(18)
(20)
LEAD FILLER PLUG
(19)
END PLUG
(17)
(14)
FILLER BLOCK
GASKET
15
(5)
LINER
8S16-80 SHIELDED CASK
REFERENCE DRAWINGS
NUMBER
OAK RIDGE NATIONAL LABORATORY
OPERATED BY
UNION CARBIDE CORPORATION
OAK RIDGE, TENNESSEE
ORNL LOOP TRANSPORT CASK,
DOT SPECIAL PERMIT 5753
GENERAL SPECIFICATIONS
UNLESS OTHERWISE SPECIFIED:
1. BREAK ALL SHARP EDGES
2. FOR LABEL OR FINISH OF SPECIAL, ORY BE CHOSEN BY INSPECTOR.
3. REQUIRED DEVICE FINISH
UNLESS OTHERWISE SPECIFIED:
FRACTIONS ±
DECIMALS ±
ANGLES ±
SCALE:
NO.
REVISIONS
DATE
APPD
NCO 1068-07
9

Appendix F

NUCLEAR SAFETY REVIEW FORMS

REQUEST FOR NUCLEAR SAFETY REVIEW

ORNL Criticality Committee

371

Revision 1

EXPIRATION DATE

October, 1976

This request covers operations with fissile material in a control area and/or fissile material transfers that originate within the control area. The control area supervisor shall complete the blocks below and describe the process and/or operations to be performed, emphasizing the provisions for nuclear criticality safety on the reverse side of this page. This request shall be approved by the Radiation Control Officers of the originating Division and the Division(s) to which fissile material will be transferred.

TITLE, CONTROL AREA, AND SUMMARY OF BASIC CONTROL PARAMETERS

(To be completed by the Control Area Supervisor)

TITLE (FOR REFERENCE PURPOSES) Loop Transport Carrier		DATE OF REQUEST 9/29/71	DATE REVIEW REQUIRED
CONTROL AREA Cask for Intersite Transport of Fuel	CODE NO. –	BUILDING ROOM 3525	DIVISION Operations

TYPE AND FORM OF MATERIAL	Solids only. Reactor fuel elements or fuel specimens.
ISOTOPIC ENRICHMENT (Wt. %)	Up to 100% ^{235}U, ^{233}U, or Plutonium.
QUANTITY OF FISSILE ISOTOPES	PER ISOLATED BATCH OR UNIT <1250 g TOTAL IN ~~XXXXXXXXXX~~ Cask ≤1250 g Also, if total is >800 g, linear density not to exceed 250 g/ft. TOTAL TO BE PROCESSED –
Concentration or Density of Fissile Material	–
Spacing of Fissile Units	–
Proximity and Type of Neutron Reflectors or Adjacent Fissile Material	8 in. of Pb shielding around cavity.
Limit on Moderation	–
Limit on Neutron Absorbers	–
Limit on Volume or Dimensions of Containers	Cavity dimensions 5 3/4 in. diam x 69 in. long.

THIS REQUEST (~~XXXXXXX~~ REPLACES) NSR(S) NO. 371

RECOMMENDATIONS

(To be completed by the Criticality Committee)

This endorsement is based on our present understanding of the operation (whether acquired verbally or in writing) and is subject to review and cancellation.

This request is approved. The 8 in. of lead shielding renders subcritical an infinite array of such casks.

Jere P. Nichols 10-1-71

CHAIRMAN, CRITICALITY COMMITTEE DATE

PROVISIONS FOR NUCLEAR CRITICALITY SAFETY

(To be completed by the Control Area Supervisor)

Provisions for nuclear criticality safety shall be described below in accordance with Appendices II and III of the AEC Manual Chapter 0530. This shall include brief descriptions of the process and/or all operations to be performed, plans and procedures for the operations for nuclear criticality safety, and the basic control parameters. Please attach 11 copies of referenced drawings and documents.

We request approval for use of this general-purpose-use cask for fissile Class I shipment of used reactor fuel elements and irradiated experiments (fueled and nonfueled) from other sites (such as ETR in Idaho) to the ORNL hot cells for metallurgical examination. And, after examination, for the shipment of the same items to Savannah River or Idaho for fuel recovery. The fuel elements have included LITR, ORR, PM-1, and SM-1A elements. Fueled experiments have included capsules or loops containing MSRE fuel, UO_2, ThO_2, PuO_2, and other fuels.

This carrier may be loaded and unloaded under water.

The loading of the cask will not exceed 1250 g of fissile material (combinations of ^{235}U, ^{233}U, and plutonium).

In addition, if the loading exceeds 800 g, the material will be so arranged that the fissile loading will not exceed 250 g per linear ft under normal and hypothetical accident conditions.

Shipment will be by rail freight, motor vehicle, cargo aircraft, or ocean vessel. This request is for use with a submission for approval by the AEC under the requirement of AECM-0529.

ORNL Criticality Committee

371

Revision 1

EXPIRATION DATE

October, 1976

RADIATION CONTROL OFFICER	DIVISION	CONTROL AREA SUPERVISOR	BUILDING
J. H. Swanks	Operations	E. M. King	3525
RADIATION CONTROL OFFICER	DIVISION	RADIATION CONTROL OFFICER	DIVISION

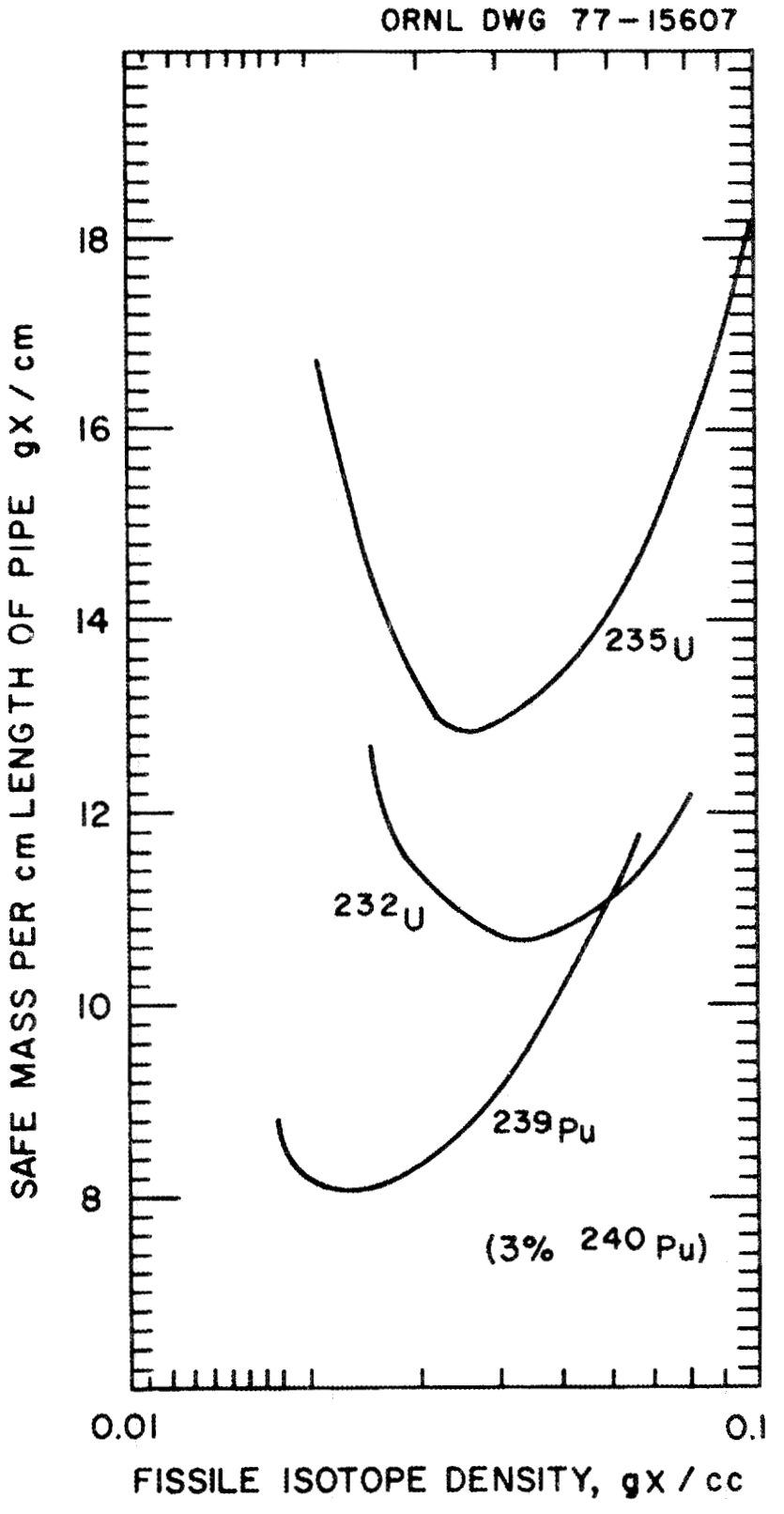
ORNL DWG 77-15607
SAFE MASS PER cm LENGTH OF PIPE gX / cm
18
16
14
12
10
8
235U
232U
239Pu
(3% 240Pu)
0.01
0.1
FISSILE ISOTOPE DENSITY, gX / cc

INTRA-LABORATORY CORRESPONDENCE

OAK RIDGE NATIONAL LABORATORY

October 22, 1976

To: Criticality Committee

Subject: Loop Transport Cask

NSR 371 Rev. 1 expires in October 1976. This NSR has been reviewed; there have been no changes in the use of the cask or in the need for continued use at the approved contents level. Extension of this NSR is requested.

A. A. Walls/E. M. King

EMK:AAW:jr

cc: J. A. Cox
E. M. King
A. A. Walls

November 15, 1976

To: E. M. King

Subject: NSR 371, Rev. 1

Based on your statement above, approval for continued use of this cask is extended for two years, to expire in October, 1978.

R. G. Adel

cc: B. L. Corbett
J. A. Cox
Criticality Committee

INTRA-LABORATORY CORRESPONDENCE

OAK RIDGE NATIONAL LABORATORY

June 19, 1975

To: R. G. Affel

From: J. W. Wachter

Subject: Nuclear Safety of Loop Transport Cask (NSR 371, R1)

The Director's Review Committee on Transportation has noted in its review of the Loop Transport cask that the nuclear safety approval imposes a restriction on the linear density of fissile isotope in the cavity of the cask. Although the value of "safe mass per foot" used the nuclear safety analysis was derived from data in TID-7016, it does not appear explicitly. I have therefore used my notes on this review to prepare the following explanation for inclusion in your files as back-up for the SARP.

The restriction of 250 grams of fissile isotope per foot was arrived at by utilizing the relationship between fissile material solution density and the diameter of the safe infinitely long water-reflected cylinder. In the attached figure, the safe cylinder diameters of TID-7016 (Figures 3, 7, and 11) have been used to calculate the mass of fissile isotope in each centimeter length of the cylinder as a function of solution concentration. This "safe" linear density passes through a minimum for each isotope, and the lower bound of these is established by the ^{239}Pu isotope as 8.1g/cm, or 0.25 kg/ft.

J. W. Wachter
Engineering Coordination and
Analysis Section
Chemical Technology Division

JWW: jr

Attachment

cc: J. H. Evans
E. M. King
J. P. Nichols
File

ORNL/ENG/TM-11
Dist. Category UC-71

INTERNAL DISTRIBUTION

1. G. A. Aramayo
2. H. C. Austin
3. E. E. Beauchamp
4. H. C. Beeson
5. M. Bender
6. J. A. Boulet
7. H. G. Burgher
8. D. D. Cannon
9. K. K. Chipley
10. H. C. Claiborne
11. R. L. Clark
12. J. A. Cox
13. W. K. Crowley
14. F. C. Davis
15-19. J. H. Evans
20. R. E. Eversole
21. F. C. Fitzpatrick
22. J. H. Gillette
23. K. W. Haff
24. G. R. Jasney
25. R. A. Just
26-30. E. M. King
31. R. V. McCord
32. J. R. McGuffey
33. J. D. McLendon
34. F. H. Neill
35. T. W. Pickel, Jr.
36. M. E. Ramsey
37. J. E. Ratledge
38. J. N. Robinson
39-40. R. W. Schaich
41. R. A. Schmidt
42. R. D. Seagren
43. L. B. Shappert
44. C. B. Smith
45. W. E. Terry
46. J. W. Wachter
47. L. V. Wilson
48-49. Central Research Library
50. Document Reference Section
51-64. Laboratory Records Department
65. Laboratory Records, ORNL R.C.
66. ORNL Patent Office

EXTERNAL DISTRIBUTION

67. E. W. Bailey, ERDA, ORO
68. E. L. Barraclough, ERDA, Albuquerque Operations Office, P.O. Box 5400, Albuquerque, NM 87115
69. W. A. Brobst, ERDA, Division of Waste Management and Transportation, Washington, DC 20545
70. T. D. Butler, Los Alamos Scientific Laboratory, P.O. Box 1663, Albuquerque, NM 87545
71. H. M. Culver, ERDA, ORO
72. R. I. Elder, ERDA, Chicago Operations Office, 9800 South Cass Avenue, Argonne, IL 60439
73. J. M. Freedman, Sandia Laboratories, P.O. Box 5800, Albuquerque, NM 87115
74. A. W. Grella, U.S. Department of Transportation, 6th and D Street SW, Washington, DC 20590
75. C. L. Hanson, Lawrence Livermore Laboratory, University of California, P.O. Box 808, Livermore, CA 94550
76. R. E. Harris, ERDA, ORO
77. J. W. Langhaar, E. I. du Pont de Nemours & Company, Wilmington, DE 19898
78. E. C. Lusk, Battelle Memorial Institute, 505 King Avenue, Columbus, OH 43201

79. W. G. O'Quinn, ERDA, Savannah River Operations Office, P.O. Box A, Aiken, SC 29801
80. R. H. Odegaarden, NRC, Office of Regulation, Washington, DC 20545
81. R. W. Peterson, Allied General Nuclear Services, P.O. Box 847, Barnwell, SC 29812
82. W. A. Pryor, ERDA, ORO
83-94. Safety and Health Protection, ERDA, ORO
95. J. A. Sisler, ERDA, Division of Waste Management and Transportation, Washington, DC 20545
96. D. W. Templeton, ERDA, Richland Operations Office, P.O. Box 550, Richland, WA 99352
97. W. H. Travis, ERDA, ORO
98. Research and Technical Support Division, ERDA, ORO
99-261. Given distribution as shown in TID-4500 under category UC-71 — Transportation of Property and Nuclear Materials (25 copies — NTIS)

☆ U.S. GOVERNMENT PRINTING OFFICE: 1977-748-189/292