OAK RIDGE NATIONAL LABORATORY LIBRARIES
3 4456 0594453 8

ORNL/NUREG/TM-129

cy. 63

Fuel Aerosol Simulant Test (FAST) Plan

A. L. Wright
A. M. Smith
T. S. Kress

Prepared for the U.S. Nuclear Regulatory Commission
Office of Nuclear Regulatory Research
Under Interagency Agreements ERDA 40-551-75 and 40-552-75

OAK RIDGE NATIONAL LABORATORY
CENTRAL RESEARCH LIBRARY
DOCUMENT COLLECTION
LIBRARY LOAN COPY
DO NOT TRANSFER TO ANOTHER PERSON
If you wish someone else to see this
document, send in name with document
and the library will arrange a loan.
UCN-7969
(3 3-67)

OAK RIDGE NATIONAL LABORATORY
OPERATED BY UNION CARBIDE CORPORATION FOR THE ENERGY RESEARCH AND DEVELOPMENT ADMINISTRATION

Printed in the United States of America. Available from
National Technical Information Service
U.S. Department of Commerce
5285 Port Royal Road, Springfield, Virginia 22161
Price: Printed Copy $4.00; Microfiche $3.00

This report was prepared as an account of work sponsored by the United States Government. Neither the United States nor the Energy Research and Development Administration/United States Nuclear Regulatory Commission, nor any of their employees, nor any of their contractors, subcontractors, or their employees, makes any warranty, express or implied, or assumes any legal liability or responsibility for the accuracy, completeness or usefulness of any information, apparatus, product or process disclosed, or represents that its use would not infringe privately owned rights.

ORNL/NUREG/TM-129
Dist. Category NRC-7

Contract No. W-7405-eng-26

Engineering Technology Division

FUEL AEROSOL SIMULANT TEST (FAST) PLAN

A. L. Wright A. M. Smith
T. S. Kress

Manuscript Completed — September 14, 1977
Date Published - September 1977

NOTICE: This document contains information of a preliminary nature. It is subject to revision or correction and therefore does not represent a final report.

Prepared for the
U. S. Nuclear Regulatory Commission
Office of Nuclear Regulatory Research
Under Interagency Agreements ERDA 40-551-75 and 40-552-75

Prepared by the
OAK RIDGE NATIONAL LABORATORY
Oak Ridge, Tennessee 37830
operated by
UNION CARBIDE CORPORATION
for the
ENERGY RESEARCH AND DEVELOPMENT ADMINISTRATION

OAK RIDGE NATIONAL LABORATORY LIBRARIES
3 4456 0594453 8

CONTENTS

	Page
ABSTRACT	1
INTRODUCTION	1
FAST PROGRAM JUSTIFICATION AND SCOPE	2
DESCRIPTION OF FAST FACILITY AND CDV SYSTEM	3
EXPERIMENTAL APPROACH	6
PROPOSED EXPERIMENTS	11
ANALYTICAL SUPPORT	14
PROBLEM AREAS	15
GLOSSARY OF ACRONYMS IN THIS REPORT	17
REFERENCES	18

FUEL AEROSOL SIMULANT TEST (FAST) PLAN

A. L. Wright A. M. Smith
T. S. Kress

ABSTRACT

This report presents the work plan for the Fuel Aerosol Simulant Test (FAST), which constitutes task 5 of the Aerosol Release and Transport (ART) Program, sponsored by the Division of Reactor Safety Research of the Nuclear Regulatory Commission. These tests involve the study of the formation, rise, and condensation of a surrogate LMFBR fuel (UO_2) vapor bubble produced in liquid sodium to simulate phenomena associated with hypothetical core-disruptive accidents (HCDAs). UO_2 bubbles will be produced by the capacitor discharge vaporization (CDV) technique. Tests through FY 1979 will be done in argon, water, and in sodium; results will be analyzed using models developed in the ART program.

Keywords: aerosol, bubble condensation, hypothetical accident, LMFBR fission product release, ex-reactor experiment, safety, radionuclide transfer, plutonium.

INTRODUCTION

The Fuel Aerosol Simulant Test (FAST) constitutes task 5 of the Aerosol Release and Transport (ART) Program at ORNL, sponsored by the Division of Reactor Safety Research of the Nuclear Regulatory Commission. This part of the program involves the experimental study of the formation, rise, and condensation of a surrogate fuel (UO_2) vapor bubble produced in liquid sodium. The experiments will be performed in the FAST facility, which is presently under construction at ORNL. Uranium dioxide vapor bubbles will be produced by the capacitor discharge vaporization (CDV) technique being developed in task 4 (CRI-III) of the ART program.[1] With the CDV technique, UO_2 fuel pellets can be put into hypothetical core-disruptive accident (HCDA)-like mean energy states of up to 3000 J/g.

This report presents the test plans for the FAST experiments through FY 1979 and describes the analytical work to accompany the tests. Vaporization of UO_2 in the FAST vessel will be performed in argon, in water, and in liquid sodium. Experiments will be modeled analytically using

a modified PAD[2] code that models the CDV energy deposition transient in the UO_2 sample and bubble condensation models developed in the ART program.[3]

The primary goal of the FAST program is to determine the potential attenuation or alteration of the source of radioactive contamination as a result of its transport through the sodium pool. The test program is oriented toward this goal, both experimentally and analytically, but it is flexible enough to adapt to new developments in HCDA analysis.

FAST PROGRAM JUSTIFICATION AND SCOPE

It is postulated that an HCDA will produce a fuel vapor bubble with temperatures greater than 4000 K which should rise through the pool of liquid sodium coolant. Radionuclides transported by this bubble, if released to the secondary containment, will constitute the "source" term to be used in aerosol behavior models for calculating potential release to the atmosphere.

At present, few experiments have been performed for characterizing the formation, rise, and condensation of HCDA-like bubbles. Consequently, safety evaluations rely entirely on speculative concepts that have not been substantiated by experimental observations. The development of the CDV system in the ART program provides the capability for using nonnuclear means to put UO_2 into high energy states and thus simulate HCDA conditions. This allows such tests to be conducted for the first time outside of a reactor under well-controlled laboratory conditions.

Some of the safety issues that can be addressed in the FAST program include:

1. Bubble formation and behavior:
   a. How do the interactions of the expanding molten fuel with the surrounding sodium affect bubble formation and content? A major unanswered question is whether the bubble is primarily fuel vapor or whether it is primarily sodium vapor resulting from fuel-coolant interaction.
   b. As fuel flash-evaporates in an HCDA, are one or more bubbles formed? What is the shape and stability of the bubble/bubbles?

c. During fuel flashing, are small fuel fragments formed that can be entrained and carried upward by the bubble?

d. Are sodium droplets entrained into the bubble to later act as a heat sink for fuel vapor condensation?

2. Bubble rise and condensation:

a. Do the mechanisms of bubble formation or presence of internal reactor structures break up the bubble and enhance bubble condensation?

b. What is the dominant mode of heat transfer from vapor to sodium — radiation or convection? To what extent do noncondensables in the bubble affect fuel condensation? What are the rates of condensation under these conditions?

c. Should condensed fuel be assumed to be removed from consideration as part of the source term or has the fuel changed phase but is still transported with the bubble to the cover-gas area?

d. What is the character of the aerosol carried into and formed in the cover-gas region of the primary containment?

The major issue to be addressed in the FAST program is the condensation behavior of an HCDA-like vapor bubble. The ART program includes new analytical model development which is supportive and interactive with the experiments. The analyses focus on fuel vapor bubble condensation and aerosol formation in the presence of noncondensable gases. Previous analytical works in the open literature[4,5] have dealt primarily with condensation of sodium vapor bubbles, whereas the analyses in the ART program are generalized to apply to either sodium vapor or fuel vapor bubbles and can be used in safety assessment calculations.

DESCRIPTION OF FAST FACILITY AND CDV SYSTEM

A simplified schematic of the FAST facility is shown in Fig. 1. The pressure vessel, approximately 183 cm (6 ft) high and 61 cm (2 ft) in diameter, is made of 1.9-cm-thick (0.75-in.) type 304H stainless steel and has a removable head. The vaporization unit is inserted into one of four lower vessel ports, and fill and drain tanks supply liquid to the

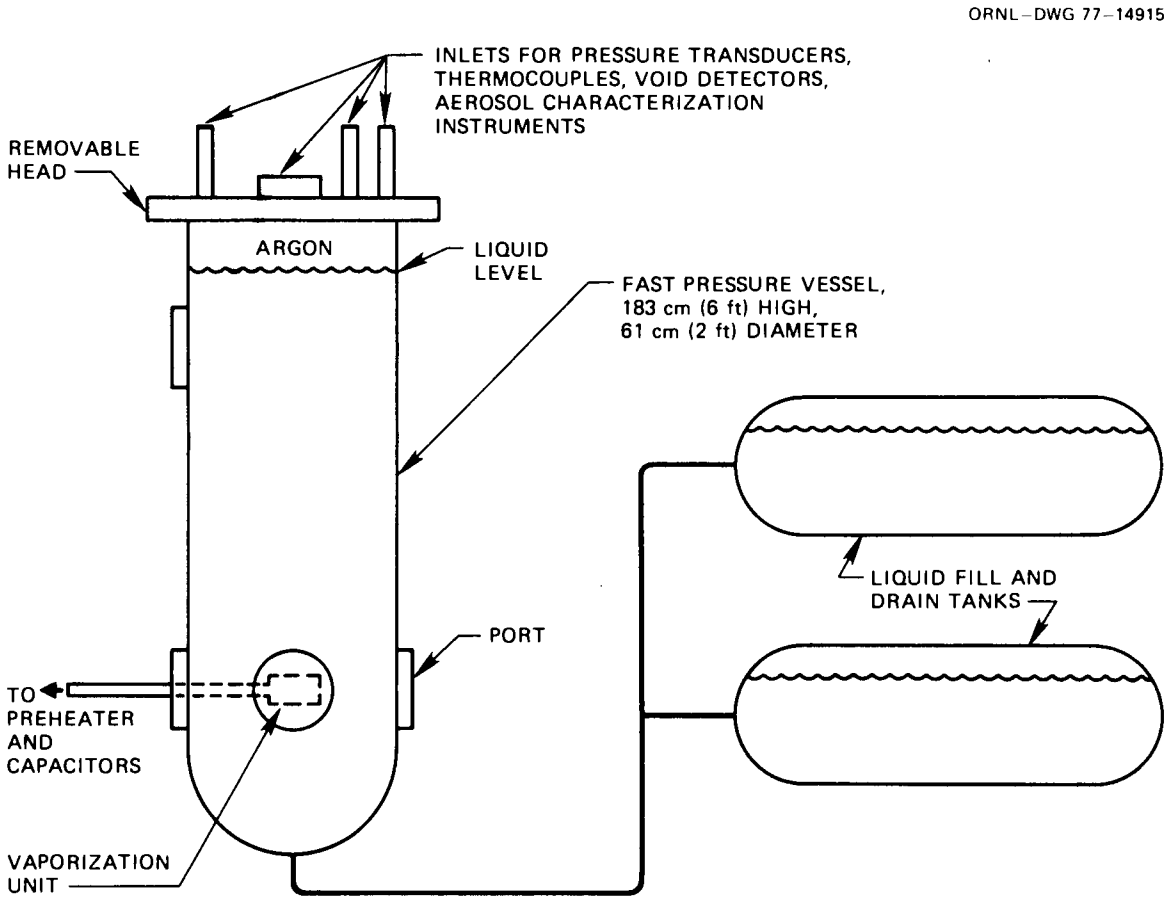

Fig. 1. Fuel Aerosol Simulant Test (FAST) facility.

vessel. Penetrations for bubble characterization and aerosol sampling are provided through the removable head and through the lower ports.

The CDV system consists of the capacitor banks and preheater, associated switching and control circuitry, a vaporization unit that houses the UO_2 fuel simulant samples, and appropriate electrical connections. There are four capacitor banks of ten capacitors each. Each capacitor can store 3 kJ and is rated at 3000 V. The present total energy storage capacity is 120 kJ, but the addition of the final two banks of capacitors will increase the capacity to 180 kJ. The preheater is used to melt a substantial portion of the UO_2 pellet stack prior to discharging the capacitors.

A typical UO_2 test sample design is shown in Fig. 2. Electrical energy from preheat and capacitor discharge is transferred to the UO_2

ORNL–DWG 77–14916

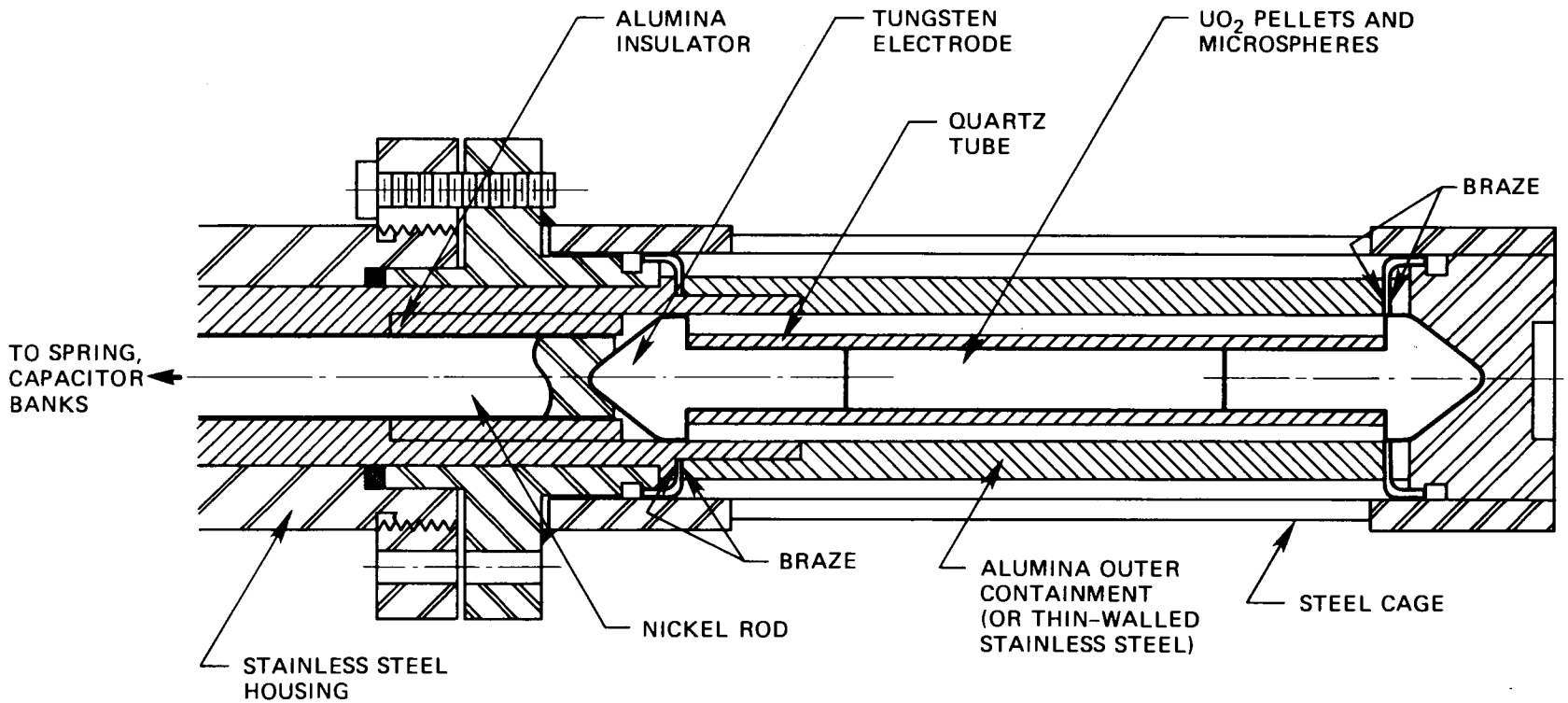

Fig. 2. FAST vaporizer unit.

pellet stack through tungsten electrodes. The UO_2 pellets are surrounded by UO_2 microspheres for thermal insulation and by a quartz containment. After capacitor bank discharge through the sample, the UO_2 vapor pressure ruptures the quartz and the outer containment and the UO_2 expands and flashes to vapor within the sodium pool. The outer containment, which may be either ceramic or thin-walled stainless steel, will prevent sodium or water from contacting the tungsten electrodes before discharge of the capacitors. The capability exists to include inert gas, simulating noncondensables, in the space between the outer containment and the quartz tube.

EXPERIMENTAL APPROACH

Parameters for the FAST experiments are shown in Table 1. In-sodium tests at a temperature typical of that for an LMFBR are designed to simulate HCDA thermal conditions. The cover-gas pressure will be varied up to 20 atm as a means of controlling the state of the vapor bubble as it rises through the sodium.

Table 1. FAST experimental parameters

Vessel dimensions	
Height	183 cm (6 ft)
Diameter	61 cm (2 ft)
Vessel design limits	
Internal pressure	3.16 MPa (31.2 atm)
Internal temperature	880 K (1125°F)
Test fluids	Argon, water, sodium
Test parameters	
Pressures	0.101–2.02 MPa (1–20 atm)
Temperatures	298–866 K (77–1100°F) for argon tests 298–311 K (77–100°F) for water tests 866 (1100°F) for sodium tests
Liquid level	0–107 cm (0–42 in.)
UO_2 pellet stack mass	10–25 g
CDV energy input	To be determined from CRI-III tests with FAST vaporizer unit

The ART program CRI-III tests indicate that 1 to 2 g of UO_2 vapor can be produced by the present CDV system in single-pin tests.[6] Table 2 presents estimates of spherical and "spherical cap" bubble diameters, assuming that the bubbles expand to the indicated cover-gas pressure. Bubbles larger than approximately 1 cm in diameter are likely to be spherical caps. Spherical cap diameters are of the order of one-half the FAST vessel diameter of 61 cm.

Table 2. Estimates of bubble dimensions

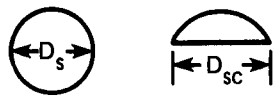

Cover gas pressure (MPa)	1-g bubble		2-g bubble	
	D_s (cm)	D_{sc} (cm)	D_s (cm)	D_{sc} (cm)
0.101	13	22	16	28
2.02	5	9	6	11

Rise times for HCDA bubbles have been estimated as approximately 2 sec. Assuming that the FAST bubbles are spherical caps and using the Davies-Taylor formula[7] to estimate bubble rise velocities, FAST bubble rise times are estimated to be less than 2.2 sec.

Since bubble formation and rise in sodium cannot be observed visually, high-speed photography (10,000 frames/sec) will be used to track the vapor bubbles under water. These results will be compared with in-vessel data from fast-response pressure transducers, void detectors, and thermocouples with the objective of developing enough information to allow the use of in-vessel data alone to "track" vapor bubbles under sodium.

The positions of the sensing transducers in the pressure vessel are shown in Fig. 3. Two 20.6-MPa (3000-psi) Kaman pressure transducers (time response <1 msec) will be mounted in the liquid to monitor the pressure history of bubble formation.

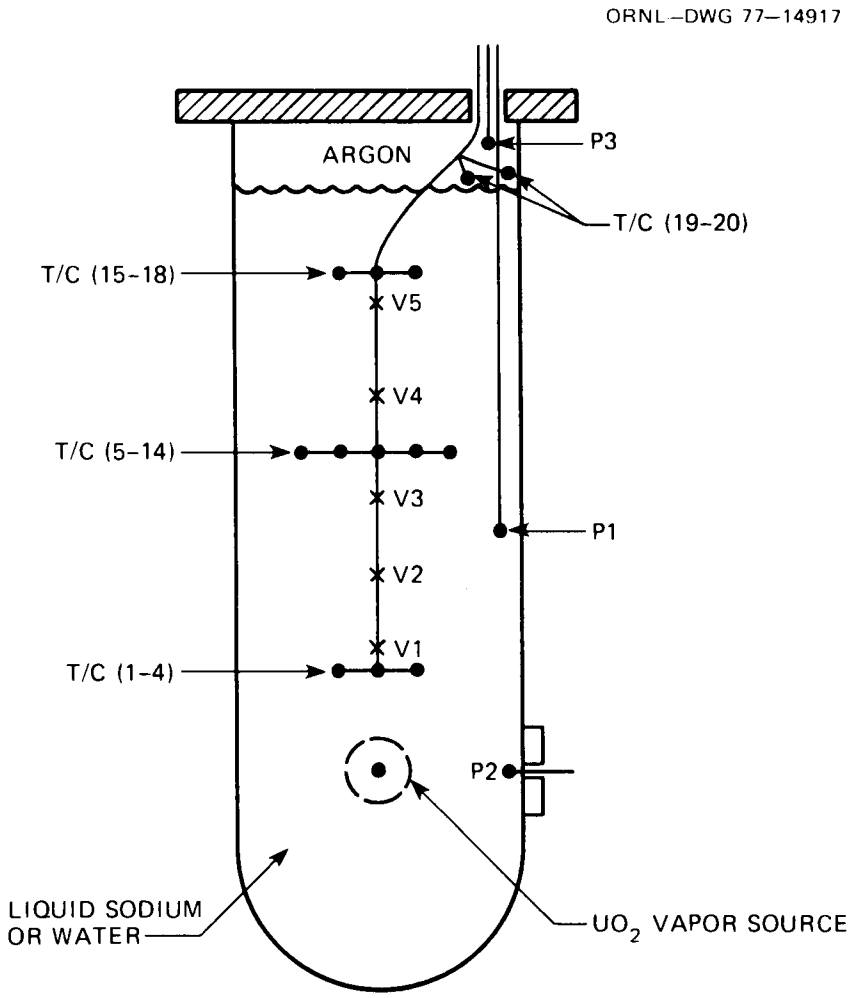

Fig. 3. FAST in-vessel instrumentation. P = pressure transducer, T/C = thermocouple, V = void detector.

Thermocouples and open-junction void detectors will be used in an attempt to sense bubble passage. Bubble temperatures are likely to be in excess of 4000 K — beyond the capability of state-of-the-art thermocouples. However, thermocouple output is likely to be as shown in Fig. 4. A thermocouple in the bubble path should detect the hot vapor for a transit time of approximately 0.1 sec, after which the thermocouple would sense the colder sodium temperature (866 K). It may then be possible to use the transient response as a measure of the bubble transit time. In addition, comparison of the different thermocouple outputs may allow the bubble diameter and changes in diameter to be estimated.

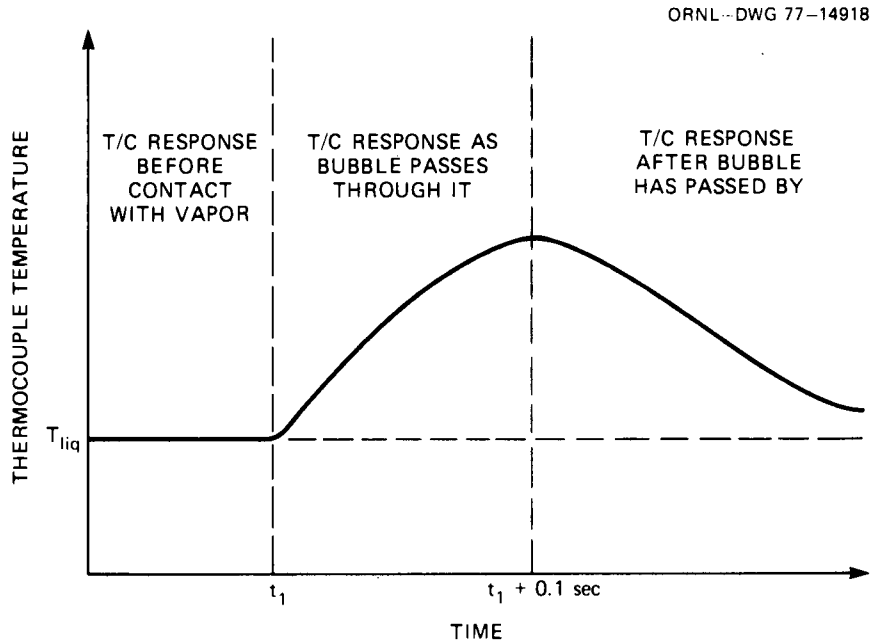

Fig. 4. Thermocouple (T/C) response to rising UO_2 bubble.

A 64-channel PDP-8E-based data-acquisition system having a scanning rate of 10,000 channels per second will be used to collect and analyze data from transducers in the liquid and cover gas.

The aerosol quantities of interest are the time-dependent airborne aerosol concentration and the aerosol particle size distribution. Analyses of various collection media should also indicate relative quantities of sodium vapor transported to the cover gas.

Samples of the cover gas will be drawn through filters to obtain the airborne concentrations. Aerosol will be drawn through an Andersen stack sampler impactor (maximum operating temperature = 1089 K) to obtain the size distribution between 10 to 0.5 μm diameter; smaller particles will be collected on an absolute filter. Fallout and plateout samplers are also available for insertion into the gas space.

The most important information to be obtained from the tests is the amount of vapor condensation occurring during bubble rise. Since we cannot presently observe the changing bubble size in sodium, we propose to measure vapor condensation by varying the vapor bubble transit

time through the liquid (i.e., varying the liquid height). At any liquid height, the vapor bubble mass when it breaks the liquid surface will be found by extrapolating the measured airborne concentrations back to the time of bubble breakthrough.

The final vapor mass as a function of liquid height, for a given CDV energy input, may look like that shown in Fig. 5. Measurements to zero liquid height will give an estimate of the initial vapor mass and the total amount of condensation for bubbles rising through liquid height h_2. In addition, the information developed in the associated CRI-III tests and in the FAST argon tests for vapor yield as a function of UO_2 energy density should give additional measures of the initial vapor mass.

The reproducibility of CDV discharge and bubble formation is presently unknown. Consequently, a number of tests at each liquid height will be required to obtain the mean condensation behavior of a bubble formed at a given CDV energy input.

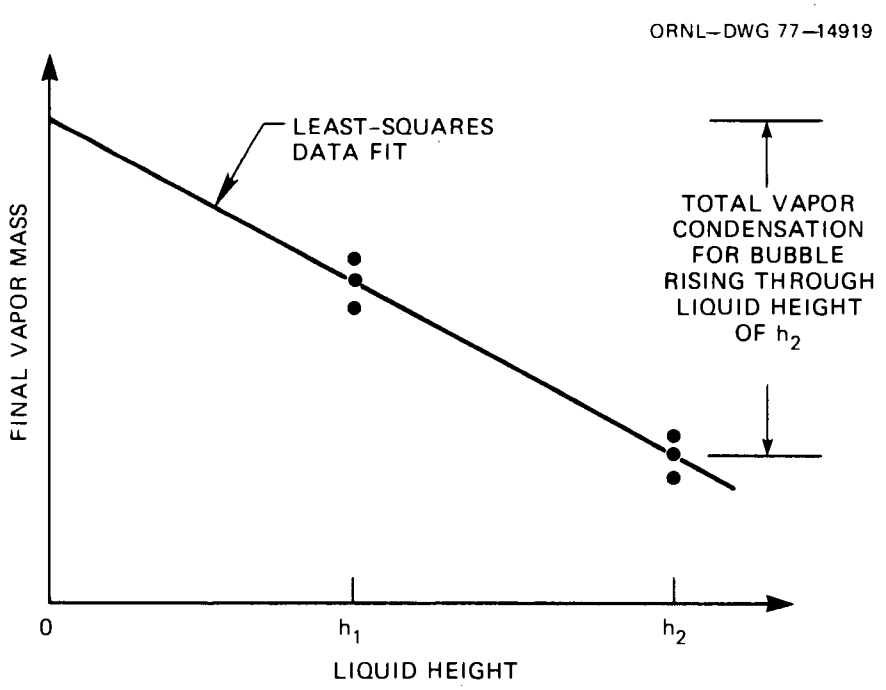

Fig. 5. Plot of mass of vapor penetrating into gas space vs liquid level.

PROPOSED EXPERIMENTS

The proposed experimental plan, illustrated in Tables 3 and 4, includes dry (argon), water, and sodium tests. The philosophy behind the different parts of the test program is discussed below.

For the initial sequence of tests, the energy input is to be held at a fixed value. This value will be determined from previous CRI-III tests and from CRI-III tests using the vaporizer unit designed for the FAST experiments.

UO_2 vaporizations in argon will be performed to verify the use of the CDV technique for producing aerosols in the FAST vessel. In addition, these tests will be used to check out the aerosol characterization equipment for use in later high-pressure, high-temperature liquid tests and will augment the baseline yield vs energy level data developed in CRI-III.

The goals of the water tests are (1) to obtain visual evidence of bubble formation and rise for comparison with in-vessel sensor output and (2) to test the method of measuring vapor condensation by varying the liquid height. In the first eight tests, we will observe how the presence of thermocouples in the bubble path, the variation of cover-gas pressure, and the presence of noncondensables in the bubble affect bubble formation and rise. The last series of six water tests will be performed at two liquid levels to allow measurement of differences in the amount of vapor condensed. These water experiments will guide us in performing sodium tests and will provide valuable model verification under thermal conditions that may be considerably different than for the sodium case.

After two shakedown tests in sodium, three series of sodium experiments are to be performed at 866 K to measure the effects of varying cover-gas pressure and the level of noncondensables. Variation of the cover-gas pressure will provide an experimental technique by which the final state of the bubble can be varied indirectly before it rises through the sodium. The cover-gas pressure influences the final temperature and pressure of the vapor bubble after CDV discharge and bubble expansion and thus affects the final size of the bubble.

Table 3. Summary of proposed FAST experiments

Test Series	Number of tests	Test parameters	Application
Vaporizations in argon	As many as possible in test period	Pressure: 0.101–2.02 MPa Temperature: 298–866 K	Checkout of CDV, FAST vaporizer, and aerosol sampling; baseline yield data
Vaporizations in water	8	Pressure: 0.101–2.02 MPa Temperature: 298 K	Photography of bubble formation, rise, and condensation and comparison with in-vessel data
	6	Pressure: 0.101 MPa Temperature: 298 K Liquid heights: 71 and 112 cm	Measurement of changes in vapor condensation with changing liquid height
Vaporizations in sodium	6	Pressure: 0.101 MPa Temperature: 866 K Liquid heights: 71 and 112 cm	Measurement of effect of cover gas pressure and noncondensables on vapor bubble parameters
	6	Pressure: 2.02 MPa Temperature: 866 K Liquid heights: 71 and 112 cm	
	6	Pressure: 0.101 MPa Temperature: 866 K Liquid heights: 71 and 112 cm Addition of noncondensables to bubble	

Table 4. Time schedule for FAST experiments

Subtask	FY 77				FY 78				FY 79				FY 80	FY 81	FY 82	FY 83	FY 84	Beyond FY 84
	1	2	3	4	1	2	3	4	1	2	3	4						
a. Complete FAST facility assembly						▼a												
b. Complete dry tests							▼b											
c. Complete water tests								▼c										
d. Complete modifications of FAST facility for sodium tests									▼d									
e. Issue topical report on water tests										▼e								
f. Complete shakedown sodium tests										▼f								
g. Complete series 1 sodium tests: 0.101 MPa, 866 K											▼g							
h. Complete series 2 sodium tests: 2.02 MPa, 866 K												▼h						
i. Complete series 3 sodium tests: 0.101 MPa, 866 K, noncondensables													▼i					

Later experiments in sodium will consist of tests with different CDV input energy levels, with a structure in the bubble path, and with multiple-pin vaporizations. Schedules for these tests will be made after experience is gained in using the FAST facility and after the capability for multiple-pin vaporizations is demonstrated in the CRI-III vessel.

ANALYTICAL SUPPORT

The FAST results will be compared with analytical models being developed in the ART program. One possible analysis scheme is a "mechanistic" description of an experiment from the time of CDV energy input to the time of aerosol formation. Such calculations might consist of:

1. A PAD code[2] calculation — using CDV energy input instead of neutronic input — up to the time of UO_2 pellet disassembly to determine the UO_2 energy state at the time of quartz containment rupture.
2. A bubble expansion calculation, time-independent or time-dependent (perhaps utilizing the Rayleigh equation), to estimate the bubble size and content.
3. An estimate of bubble rise time for an assumed shape, for instance, a spherical cap.
4. Calculation of the amount of vapor condensed during bubble rise, using models developed in the ART program, for calculated initial bubble temperature and contents.
5. Estimates of the particle size distribution produced by vapor cooling in the bubble or quenching in the argon cover gas.

In the course of the experimental work, other analytical models that may be useful are estimates of bubble formation times and fragment sizes due to flash evaporation of UO_2; calculation of the pressure history in the liquid, perhaps using the ICECO code;[8] and estimates of the amount of water or sodium vaporized by expanding two-phase UO_2.

The formation and growth of the UO_2 vapor bubble and its subsequent heat and mass exchanges with the sodium pool should be describable by the formulations in the SIMMER code,[9] which is being developed at

the Los Alamos Scientific Laboratory. The FAST experiments may therefore, provide an opportunity for validation of SIMMER.

PROBLEM AREAS

The FAST vaporizer unit has not been tested under sodium. If the alumina seal is not adequate (see Fig. 2), sodium could contact the tungsten electrodes, resulting in capacitor bank discharge through sodium rather than through the pellet stack. Tests will be conducted in the CRI-III facility and design changes made, if necessary, to insure that this unit functions satisfactorily.

The major problem area is believed to be that of accurately sensing the vapor bubble. If this were possible, it would not be necessary to perform variable liquid-level tests to measure vapor condensation. No adequate technique (i.e., x rays, gamma densitometry) has yet been identified for sensing bubble size in our tests. We will continue to investigate other possibilities such as acoustic void sensing.

Water tests will be used for photographic measurements of bubble size changes. If significant water vaporization occurs, water tests may not be prototypic of sodium tests. We presently feel that a small layer of water vapor could form a "blanket" around the bubble, inhibiting further water vapor formation. A potential fall-back position for water tests would be to vaporize something other than UO_2 in water.

Problems may also occur in aerosol mass sampling. CRI-III test results indicate[10] that in the 23.7-cm-high (9 3/4-in.) gas space for full liquid-level tests, the aerosol concentration half-time may be short — 2 to 6 min. Mass sampling should begin as soon as possible, and sampling times should be kept short so that concentration changes during sampling are small. Airborne mass sampling can be augmented by appropriate measurements of fallout and plateout.

For the technique of varying the liquid level to measure vapor condensation to be useful, the amount of vapor condensed during bubble rise should be a considerable fraction of the initial vapor mass produced. Otherwise, changes in initial vapor mass and errors in mass sampling may make it difficult to interpret vapor condensation results.

We hope to continually improve our ability to reproduce CDV-generated bubbles and also hope to develop an adequate bubble-sensing technique.

GLOSSARY OF ACRONYMS USED IN THIS REPORT

ART	Aerosol Release and Transport
CDV	Capacitor Discharge Vaporization
CRI*	Containment Research Installation
FAST	Fuel Aerosol Simulant Test
HCDA	Hypothetical Core-Disruptive Accident
ICECO	Implicit Continuous-fluid Eulerian Containment Code
LMFBR	Liquid-Metal Fast Breeder Reactor
PAD	Pajarito Dynamics Code
SIMMER	S_N, Implicit, Multifield, Multicomponent, Eulerian Recriticality Code

*Historic designation of a location rather than the name of the current activity.

REFERENCES

1. T. S. Kress, G. W. Parker, and M. H. Fontana, *Work Plan: Transient Release Program*, ORNL/TM-4875 (September 1975).

2. D. M. Peterson, W. R. Stratton, and T. P. McLaughlin, *PAD: A One-Dimensional, Coupled Neutronic Thermodynamic–Hydrodynamic Computer Code*, LA-6540MS (December 1976).

3. T. S. Kress et al., *Source Term Assessment Concepts for LMFBRs: Aerosol Release and Transport (ART) Analytical Program*, ORNL/NUREG/TM-124, to be published.

4. A. B. Reynolds, M. F. Kennedy, and H. Honig, "Condensation of a Large Sodium Vapor Bubble After a Fast Reactor Disassembly Accident," *Trans. Amer. Nucl. Soc.* 14(2), 738 (1971).

5. T. G. Theofanous and H. K. Fauske, "The Effect of Noncondensables on the Rate of Sodium–Vapor Condensation from a Single Rising HCDA Bubble," *Trans. Amer. Nucl. Soc.* 15(2), 814 (1972).

6. M. H. Fontana and T. S. Kress, *LMFBR Aerosol Release and Transport Program Quarterly Progress Report for January–March 1977*, ORNL/NUREG/TM-113.

7. R. M. Davies and G. I. Taylor, "The Mechanics of Large Bubbles Rising Through Extended Liquids and Through Liquids in Tubes," *Proc. Roy. Soc. A200*, 375 (1950).

8. C. Y. Wang, *ICECO: An Implicit Eulerian Method for Calculating Fluid Transients in Fast Reactor Containment*, ANL/RAS-75-9 (March 1975).

9. C. R. Bell et al., *SIMMER: An S_N ... Computer Code for LMFBR Disrupted Core Analysis*, LA-NUREG-6467MS (January 1977).

10. M. J. Kelly, Oak Ridge National Laboratory, personal communication, March 1977.

ORNL/NUREG/TM-129
Dist. Category NRC-7

Internal Distribution

1. R. E. Adams
2. M. Bender
3. H. W. Bertini
4. J. R. Buchanan
5. W. B. Cottrell
6. G. E. Creek
7. F. L. Culler, Jr.
8. G. G. Fee
9. D. E. Ferguson
10. G. F. Flanagan
11-15. M. H. Fontana
16. P. A. Gnadt
17. J. T. Han
18. N. Hanus
19. W. O. Harms
20. G. Hofmann
21. W. R. Huntley
22. P. R. Kasten
23. M. J. Kelly
24-28. T. S. Kress
29. Milton Levenson
30. R. E. MacPherson
31. A. P. Malinauskas
32. C. A. Mills
33. F. H. Neill
34. L. C. Oakes
35. G. W. Parker
36. L. F. Parsly
37. H. Postma
38. J. M. Rochelle
39. J. P. Sanders
40. Myrtleen Sheldon
41. M. J. Skinner
42-44. A. M. Smith
45. I. Spiewak
46. D. G. Thomas
47. M. L. Tobias
48. D. B. Trauger
49. W. E. Unger
50. J. L. Wantland
51. J. S. White
52. G. D. Whitman
53-62. A. L. Wright
63-64. Central Research Library
65. Y-12 Document Reference Section
66-68. Laboratory Records Department
69. Laboratory Records (RC)

External Distribution

70-77. Director, Office of Nuclear Regulatory Research, Nuclear Regulatory Commission, Washington, D.C. 20555
78. Director, Reactor Division, ERDA, ORO
79. Director, Research and Technical Support Division, ERDA, ORO
80-344. Given distribution as shown in category NRC-7 (25 copies — NTIS)