ORNL-5409

MARTIN MARIETTA ENERGY SYSTEMS LIBRARIES
3 4456 0049630 9

Safety Analysis Report for Packaging (SARP) of the Oak Ridge National Laboratory TRU Californium Shipping Container

B. B. Klima
L. B. Shappert
M. C. Jurgensen
R. D. Seagren
W. D. Box

OAK RIDGE NATIONAL LABORATORY
CENTRAL RESEARCH LIBRARY
CIRCULATION SECTION
4500N ROOM 175
LIBRARY LOAN COPY
DO NOT TRANSFER TO ANOTHER PERSON
If you wish someone else to see this report, send in name with report and the library will arrange a loan.
UCN 7969 (3 9-77)

OAK RIDGE NATIONAL LABORATORY
OPERATED BY UNION CARBIDE CORPORATION · FOR THE DEPARTMENT OF ENERGY

Printed in the United States of America. Available from
National Technical Information Service
U.S. Department of Commerce
5285 Port Royal Road, Springfield, Virginia 22161
Price: Printed Copy $6.50; Microfiche $3.00

This report was prepared as an account of work sponsored by an agency of the United States Government. Neither the United States Government nor any agency thereof, nor any of their employees, contractors, subcontractors, or their employees, makes any warranty, express or implied, nor assumes any legal liability or responsibility for any third party's use or the results of such use of any information, apparatus, product or process disclosed in this report, nor represents that its use by such third party would not infringe privately owned rights.

ORNL-5409
Dist. Category UC-71

Contract No. W-7405-eng-26

CHEMICAL TECHNOLOGY DIVISION

Pilot Plant Section

SAFETY ANALYSIS REPORT FOR PACKAGING (SARP) OF THE OAK RIDGE NATIONAL LABORATORY TRU CALIFORNIUM SHIPPING CONTAINER

B. B. Klima*
L. B. Shappert
M. C. Jurgensen
R. D. Seagren
W. D. Box

Date Published: April 1978

*Retired.

OAK RIDGE NATIONAL LABORATORY
Oak Ridge, Tennessee 37830
operated by
UNION CARBIDE CORPORATION
for the
DEPARTMENT OF ENERGY

MARTIN MARIETTA ENERGY SYSTEMS LIBRARIES
3 4456 0049630 9

TABLE OF CONTENTS

	Page
ABSTRACT	1
1. INTRODUCTION	1
1.1 Description of the Package	2
1.2 Contents of the Package	2
2. STRUCTURAL EVALUATION	2
2.1 Mechanical Properties of Materials	8
2.2 General Standards for All Packages	8
2.2.1 Closure	8
2.2.2 Cask-lifting devices	8
2.2.3 Lid-lifting device	8
2.2.4 Tie-down devices	8
2.3 Standards for Type B and Large Quantity Packaging	13
2.3.1 Load resistance	19
2.3.2 External pressure	19
3. COMPLIANCE WITH STANDARDS FOR NORMAL CONDITIONS OF TRANSPORT	20
3.1 Heat	20
3.1.1 Thermal properties of materials	21
3.1.2 Thermal model	21
3.1.3 Maximum temperatures	21
3.1.4 Thermal expansion stresses	25
3.2 Cold	27
3.3 Pressure	27
3.4 Vibration	28
3.5 Water Spray	28
3.6 Free Drop	28
3.7 Penetration	30
3.8 Compression	30
4. COMPLIANCE WITH STANDARDS FOR HYPOTHETICAL ACCIDENT CONDITIONS	30
4.1 Free Drop	31
4.1.1 Drop on rounded stainless steel outer shell	31
4.1.2 Drop on top flange	32
4.1.3 Drop on bottom flange	34
4.2 Puncture	36
4.3 Thermal Evaluation	39

4.3.1 Hypothetical thermal accident condition discussion 39
4.3.2 Thermal properties of materials 40
4.3.3 Thermal accident analysis 40
4.3.4 Container temperatures 40

5. CONTAINMENT 40
5.1 Special-Form Shipments 42
5.1.1 Special-form containers 42
5.2 Other Shipments 42
5.2.1 Specification 2R containers 42
5.3 Containment Requirements for Normal Conditions of Transport 47
5.4 Containment Requirements During the Hypothetical Accident 47

6. CRITICALITY 47
6.1 Evaluation of a Single Package 47

7. SHIELDING EVALUATION 48
7.1 Discussion and Results 48

8. QUALITY ASSURANCE 48
8.1 Fabrication, Inspection, and Acceptance Tests 48
8.2 Operating Procedures and Routine Inspection 48
8.3 Periodic Maintenance and Inspection 49

9. APPENDIXES
9.1 Drawings Associated with the TRU Californium Shipping Container 51
9.2 Approval Documents 71
9.3 Computer Program for 30-ft Drop Onto the Top and Bottom of the TRU Californium Shipping Container - Program 1014 Cask 77

9.4 Typical Operating and Inspection Procedures for TRU Californium Shipping Container 86

10. REFERENCES 96

SAFETY ANALYSIS REPORT FOR PACKAGING (SARP) OF THE OAK RIDGE NATIONAL LABORATORY TRU CALIFORNIUM SHIPPING CONTAINER

B. B. Klima, L. B. Shappert, M. C. Jurgensen, R. D. Seagren, and W. D. Box

ABSTRACT

An analytical evaluation of the Oak Ridge National Laboratory TRU Californium Shipping Container was made in order to demonstrate its compliance with the regulations governing off-site shipment of packages that contain radioactive material. The evaluation encompassed five primary categories: structural integrity, thermal resistance, radiation shielding, nuclear criticality safety, and quality assurance. The results of this evaluation demonstrate that the container complies with the applicable regulations.

1. INTRODUCTION

The ORNL TRU Californium Shipping Container was designed and fabricated at the Oak Ridge National Laboratory. The design was analyzed in 1971 (see ref. 1) and reevaluated in 1974 to demonstrate compliance with the regulations. The results of the analyses are presented in Sects. 2 through 8 of this report. The package was inspected to ensure that it was in accordance with the drawings presented in Sect. 9.1.

The primary use of the container is to provide impact and thermal resistance, as well as shielding, for its contents during both normal transport and hypothetical accident conditions. The package is shipped by truck only on its own specially designed trailer. It can be transported by other modes if necessary. It complies with the Nuclear Regulatory Commission (NRC) regulations contained in the *Code of of Federal Regulations*, Title 10, Part 71;[2] *DOE Manual* Chapter 0529;[3] and all Immediate Action Directives (IAD) in effect as of this report date. The cask also complies with U.S. Department of Transportation regulations published in the *Code of Federal Regulations*, Title 49, Part 173.[4]

Calculations, engineering logic, and all related documents that demonstrate compliance with specifications are presented in subsequent sections of this report. Copies of the approval documents are reproduced in Sect. 9.2.

One shipping container was fabricated and originally assigned ORNL No. 10-S-21-211. Later, the Department of Transportation assigned Special Permit No. 5740 to the container.

1.1 Description of the Package

The TRU Californium Shipping Container (see Fig. 1.1 and the engineering drawings in Sect 9.1) weighs 23,500 lb and consists of two 1/2-in.-thick, 66-in.-diam stainless steel hemispherical heads joined by a 6-in. cylindrical section. The cylindrical cavity is 3 in. in diameter by 6 in. long and is shielded by 30 in. of Blackburn limonite concrete having a density of ~175 lb/ft.^{3} Reinforcing steel ties the concrete to the outer shell and the central cylindrical cavity. The wall of the cavity is 1-in.-thick stainless steel. Upper and lower ball valves located at the end of concrete-filled plugs define, isolate, and seal the cavity. The plugs utilize O-ring seals, are bolted in place, and are protected with a gasketed cover plate. Fusible plugs, which will melt in the thermal aspect of the hypothetical accident, will permit steam from the concrete and gases from the cover plate to escape (see Fig. 1.1). The typical ball valve, ball valve operator, and seal plug arrangement are shown in Fig. 1.2.

The top ball valve and plug may be replaced by other plugs, permitting multiple source shipments (see Fig. 1.3). Sources are contained in 2R or special-form containers (see Sect. 5).

The TRU Californium Shipping Container is shipped on its special trailer (see Fig. 1.4). A 1-in.-thick octagonal deck plate is welded to the trailer. Four chocks welded to this deck plate locate the container. The base of the container is attached to the deck plate by eight 2-in.-diam bolts. Four of the eight lifting ribs are used as tie-down points and are attached to the trailer by 7/8-in.-diam cables.

1.2 Contents of the Package

The cask is designed to transport isotopes of americium, curium, berkelium, californium, einsteinium, and fermium as a solid (either metal, oxide, oxysulfate, or dry salt) that will be carried inside the cask in a 2R or special-form capsule. The maximum quantity of any or all radionuclides shipped will be 3 g, which is defined as a large quantity.[5] The cask is designed for a maximum heat load of 50 W (170 Btu/hr). The dose rates external to the cask will be limited to those permitted by the DOT.[6]

2. STRUCTURAL EVALUATION

The package complies with the structural requirements of the regulations (see Sects. 2 through 4). The calculations, test results, and engineering logic presented in the following sections demonstrate compliance with these performance criteria. The effects of both normal transport and specified accident conditions on the structural integrity of the package are considered.

ORNL DWG 74-11723

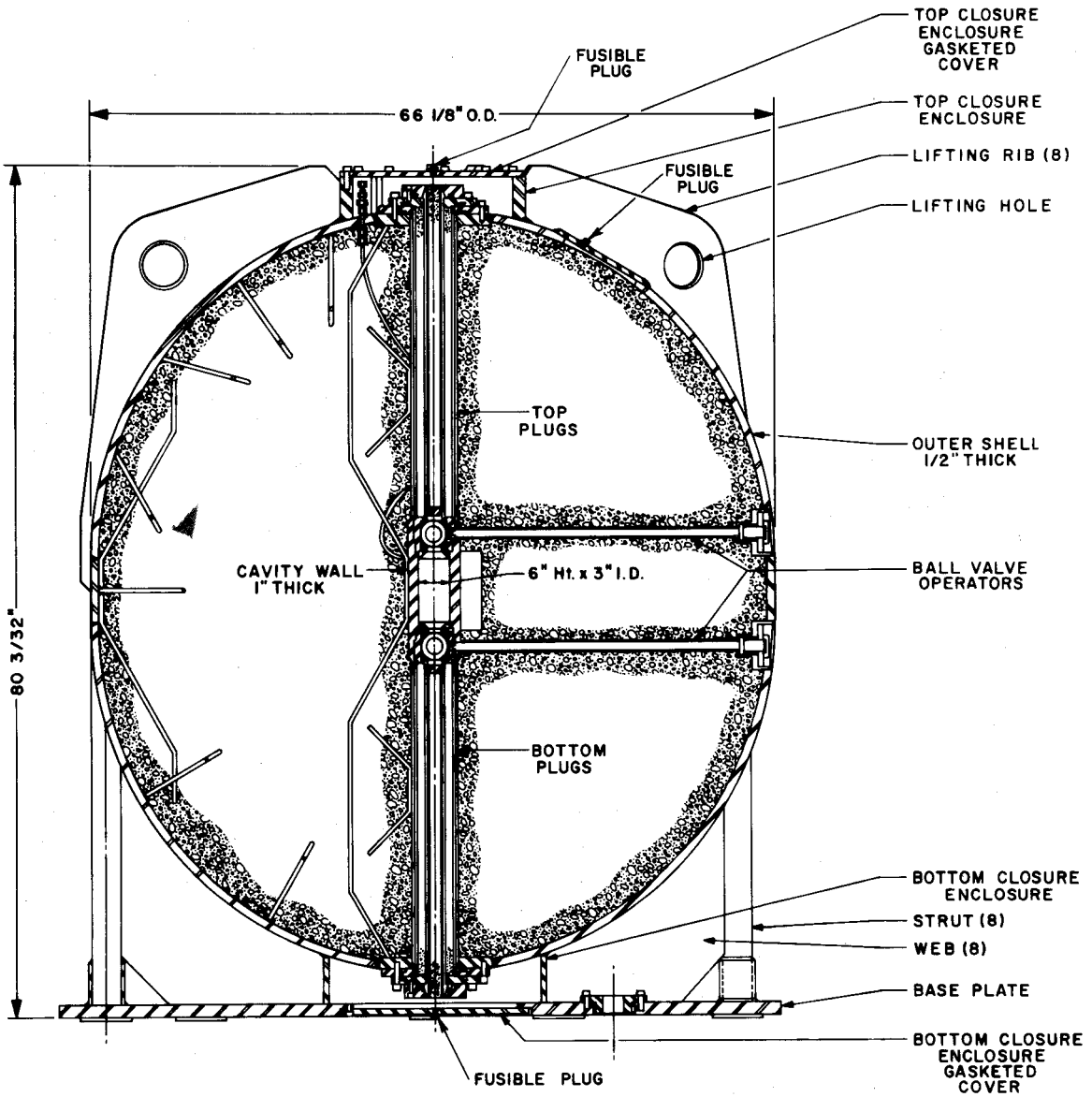

Fig. 1.1 TRU Californium Shipping Container.

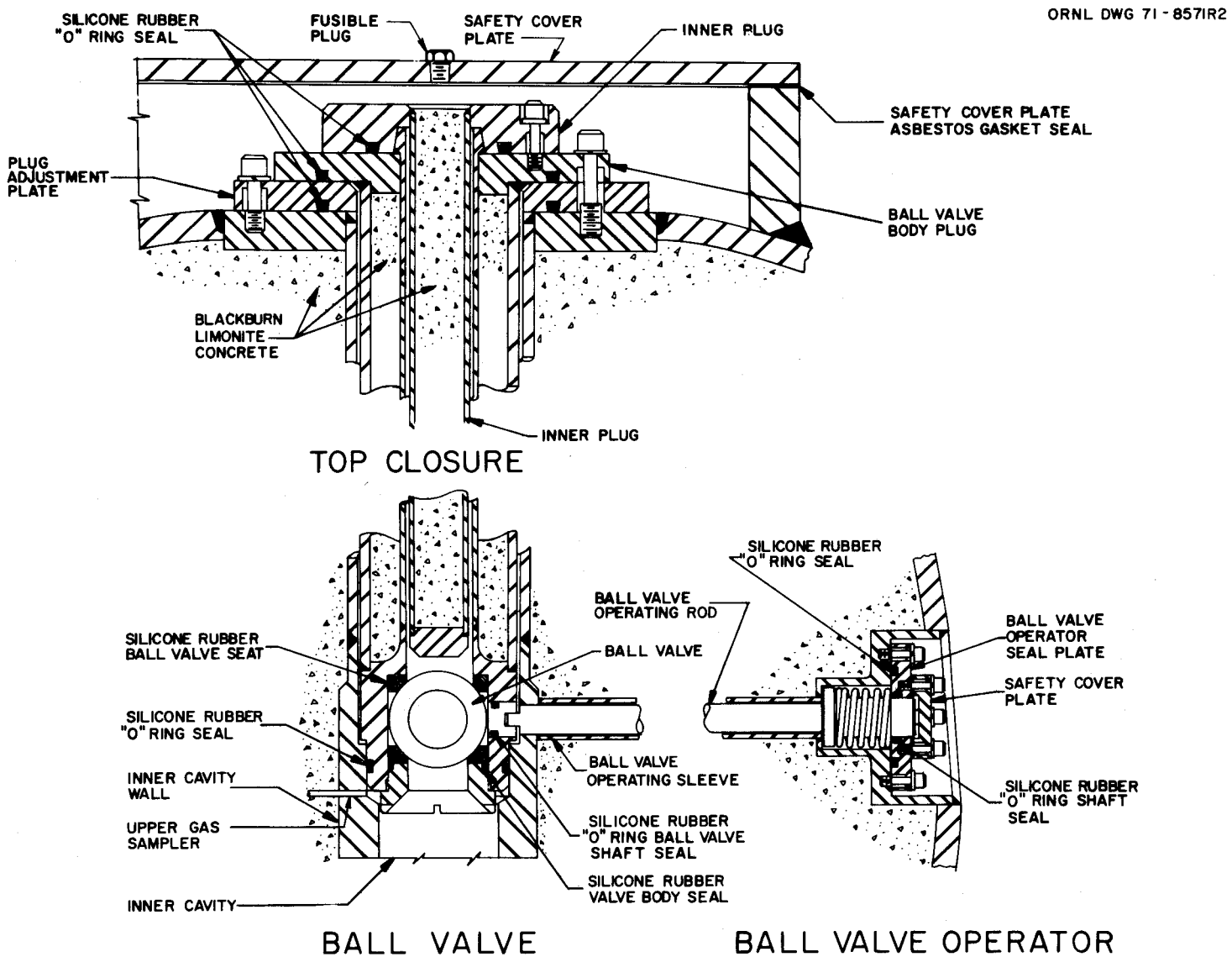

Fig. 1.2 Ball-valve upper closure for loading single-specimen shipment, showing plug and seal arrangement.

ORNL DWG 71-8570R3

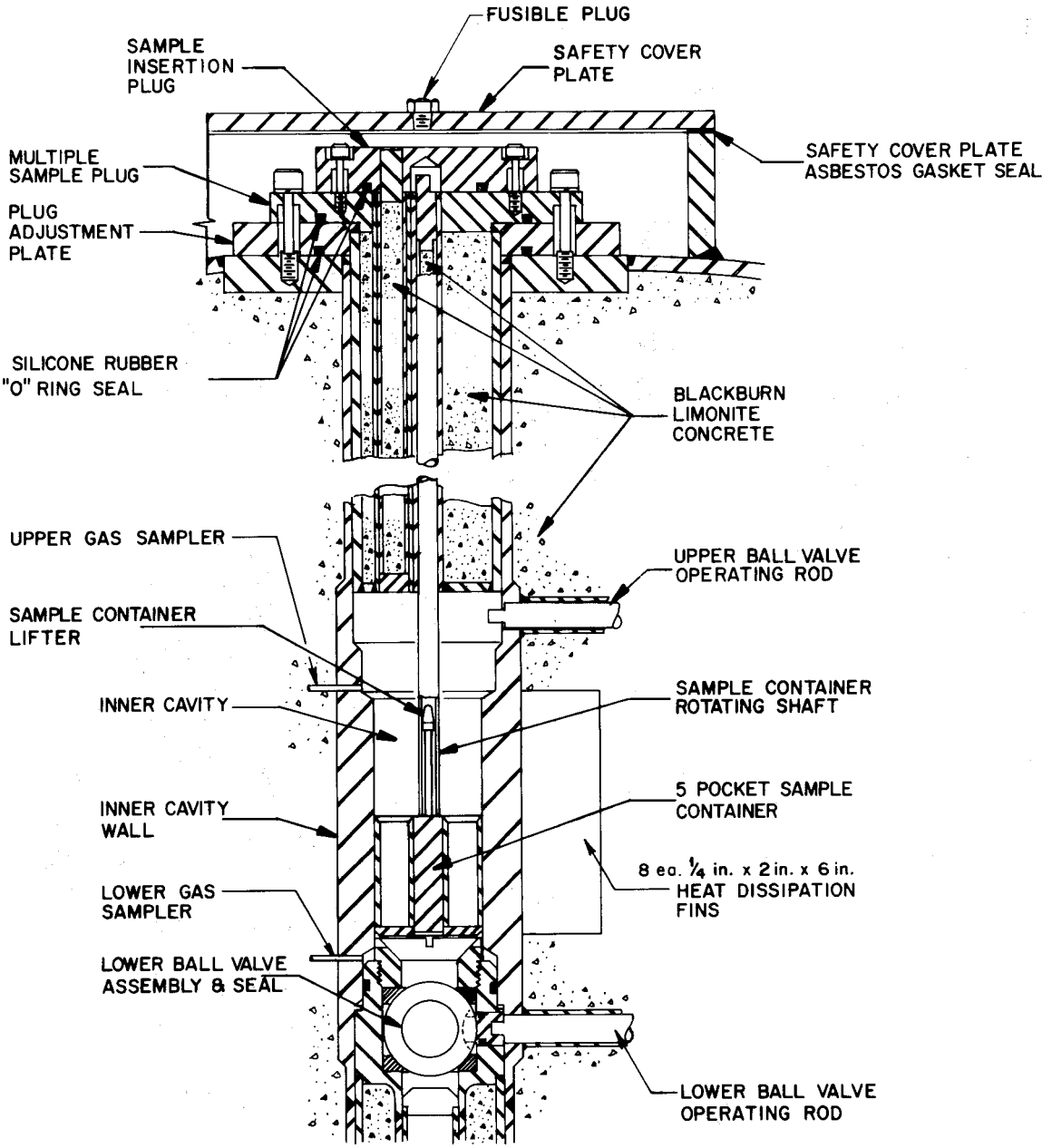

Fig. 1.3 Plug and sample container to permit multiple-specimen shipment (maximum, five specimens), showing plug and seal arrangement.

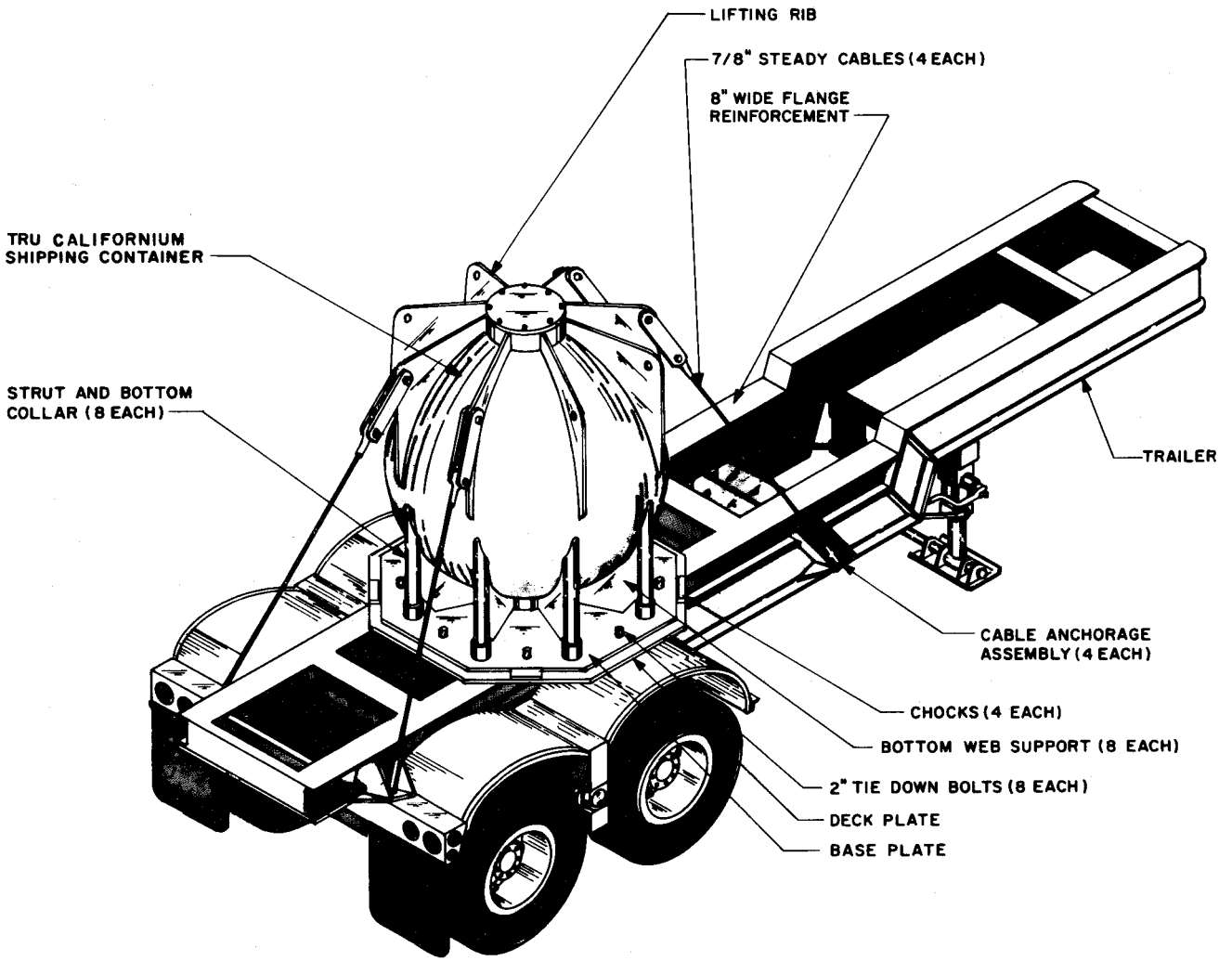

Fig. 1.4 TRU Californium Shipping Container tie-down and shipping assembly.

2.1 Mechanical Properties of Materials

The mechanical properties of 304L stainless steel and limonite concrete are summarized in Table 2.1.

2.2 General Standards for All Packages

The general standards for all packages include an evaluation of the following: (1) the chemical and galvanic reactions between the materials of construction and the intended package contents; (2) the method used for closure; (3) the cask-lifting devices, (4) the lid-lifting devices, and (5) the and tie-down devices used in securing the package to the trailer.

2.2.1 *Reactions between materials of construction and package contents*

The container is constructed, as shown in the as-built drawing (see Fig. 1.1 and Sect. 9.1), of type 304L stainless steel and limonite concrete. No evidence of any significant chemical, galvanic, or other reaction between these materials has been noted; additionally, past experience has not revealed any indication of reactions between these materials of construction and the intended package contents.

2.2.2 *Closure*

The cask is equipped with a positive closure consisting of two cover plates, one on the top and one on the bottom, held in place with twelve 1/2-in.-diam bolts. The bolts on the top plate are seal wired in place to indicate tampering with or opening of the cask; the bottom plate is inaccessible in transit.

2.2.3 *Cask-lifting devices*

If there is a system of lifting devices that is a structural part of the package, the regulations stipulate that this system must be capable of supporting three times the weight of the loaded package without generating stress in any material of the package in excess of its yield strength.

The Californium Shipping Container is designed to be lifted by holes in any two of eight lifting ribs that are symmetrically spaced around the cask. Since the lifting will always be applied to two holes, the analysis will be based on that mode of operation.

Both the ribs and the cask body are fabricated from 304L stainless steel. A schematic diagram of a lifting rib and the lifting load is given in Fig. 2.1. The lifting rib is analyzed, first, to determine the adequacy of the weld between the rib and cask body; a second analysis determines whether the stresses around the lifting holes are below the tensile yield stress or the shear yield stress of 304L stainless steel.

Table 2.1. Mechanical properties of 304L stainless steel and limonite concrete

Properties	Symbol	Stainless steel 304L	Limonite concrete
		Static properties	
Tensile yield stress, psi	σ_y	30×10^3[a]	
Allowable shear stress, psi	τ_a	15×10^3[b]	
Ultimate shear strength, psi	τ_u	61,000[a]	
Young's modulus, psi	E	30×10^6[a]	
Poisson's ratio	ν	0.3[a]	
Weight density, lb/in.^{3}	γ	0.29[c]	0.101[d]
Thermal expansion coefficient, per °F	α	9.9×10^{-6}	
		Dynamic properties	
Specific energy, in.-lb/in.^{3}	S min S max	10×10^4 26×10^4	
Yield stress, psi	σ_s	61.2×10^3[e]	

[a]International Nickel Company, Inc., Mechanical and Physical Properties of Austenitic Chromium-Nickel Stainless Steel at Ambient Temperatures, 1963.

[b]50% of tensile yield stress.

[c]L. B. Shappert, Cask Designers Guide, ORNL NSIC-68, February 1970.

[d]B. B. Klima and L. B. Shappert, The TRU Ten-Ton Californium Shipping Container, ORNL-TM-3505 (Nov. 1971).

[e]Based on minimum ratio of yield/ultimate values for bolts as indicated in Table 5.1 and on minimum tensile strength of 95,000 psi (p. 55) given in D. D. Cannon's Structural Analysis of Shipping Casks, Vol. 12, Energy Absorption Characteristics of Stainless Steel Bolts Under Impact Loading, ORNL-1312, Vol. 12 (May 1972).

Weld between rib and cask body. Eight 1-in.-thick lifting ribs are spaced equally around the top of the cask, each with a 4-in.-diam hole centered 5 in. from the edge of the rib (see Fig. 2.1).

The cask is usually lifted with an eye-and-cable sling through two ribs. For this analysis, a safety factor of three times the nominal weight of the cask is used. Therefore, the load per rib is expressed by the following equation:

$$P = F\underline{W}/N, \tag{2.1}$$

where

P = load per rib, lb,

F = safety factor, 3,

$\underline{W}$ = cask weight, 23,500 lb,

N = ribs used in lifting, 2.

Substituting these values in Eq. (2.1) yields

$$P = (3)(23{,}500)/2 = 35{,}250 \text{ lb}.$$

The rib is attached to the cask by a 3/8-in. weld made completely around the perimeter of the rib.

A 3/8-in. weld is capable of supporting 3600 lb per linear inch of weld.[7] Hence the maximum allowable lifting load (P_{max}) can be calculated from Eq. (2.2) in the following manner:

$$P_{max} = 3600\ L, \tag{2.2}$$

where

L = length of weld, 86 in.

Substituting,

$$P_{max} = 309{,}000 \text{ lb}.$$

This value is considerably in excess of the required 35,250 lb; therefore, it is quite feasible to use the ribs for lifting the cask and still maintain a large safety factor during this operation.

ORNL DWG 71-7835

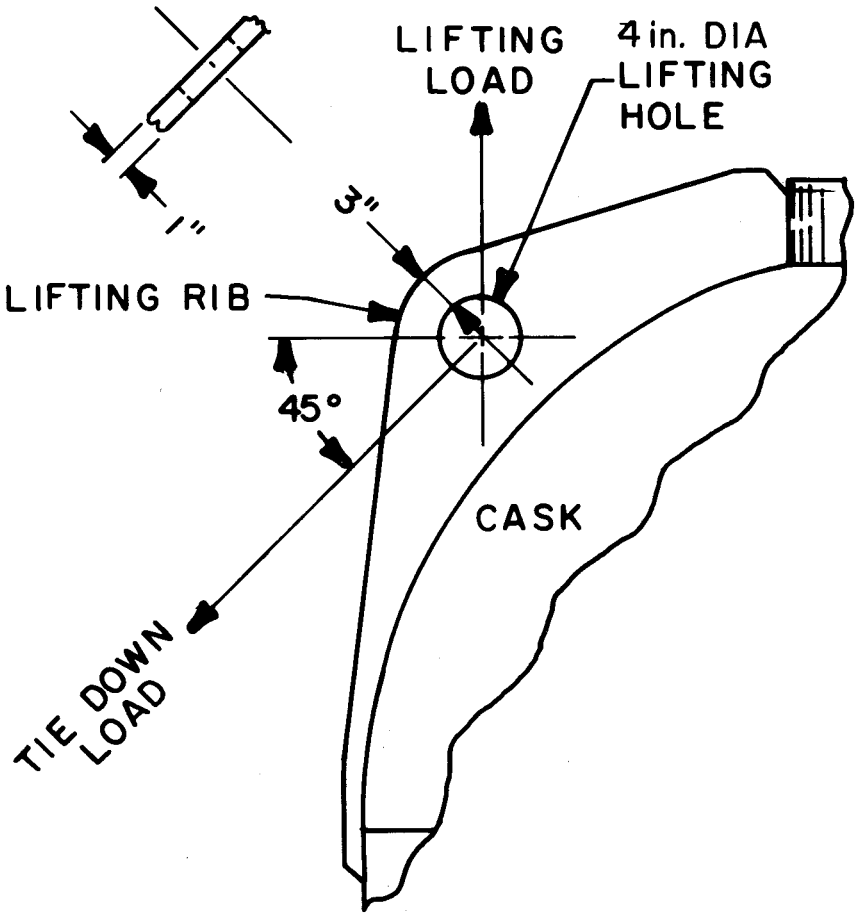

Fig. 2.1 Lifting rib.

Stress around the lifting hole. The stress around the lifting hole is analyzed, assuming that the metal nearest the outside of the rib acts like a curved beam with fixed ends and loaded in the center. Although such an analysis is not exact, the predicted stresses will be high (conservative). Dimensions of the curved beam as used in the analysis are given in Fig. 2.2.

The following analysis is based on equations given by Roark[8] that can be used to predict stress concentration factors found in the analysis of curved beams. For a value of $r/c = 3.5/1.5 = 2.35$, where r is the radius of curvature measured to the centroid of the section and c is defined below, a table supplied by Roark[8] indicates the following:

$$k_i = 1.39 = S_i/S \tag{2.3}$$

and

$$k_o = 0.78 = S_o/S, \tag{2.4}$$

where

k = the stress concentration factor,

S_i = actual stress in extreme fiber on concave side,

S_o = actual stress in extreme fiber on convex side,

S = unit stress in corresponding fiber as computed by ordinary flexure formula for a straight beam.

Since $S = Mc/I$, (2.5)

where

M = bending moment = $FL/8$, in.-lb, (2.6)

c = distance from centroidal axis to extreme fiber, 1.5 in.,

I = moment of inertia, $bd^3/12$, in.^{4}, (2.7)

L = length of beam, 4.95 in.,

F = force on one rib assuming a safety factor of 3, 35,250 lb,

d = depth of beam, 3 in.,

b = width of beam, 1 in.

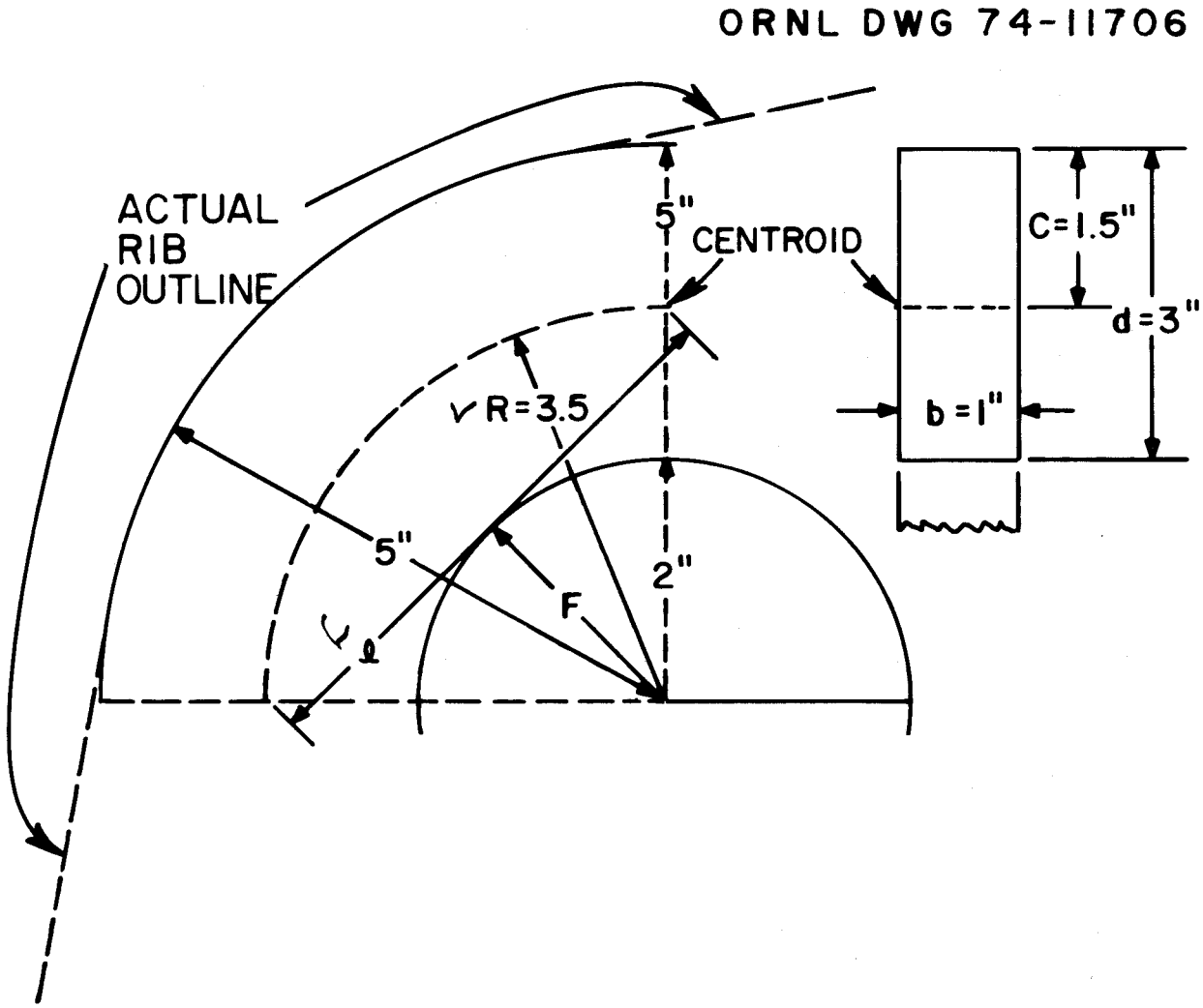

Fig. 2.2 Curved-beam analysis of lifting rib.

Substituting these values and the dimensions shown in Fig. 2.2,

$$M = (35{,}250)(4.95) = 21{,}800 \text{ in.-lb},$$

$$I = (1)(3)^3/12 = 2.25 \text{ in.}^4,$$

$$S = (21{,}800)(1.5) = 14{,}500 \text{ psi}.$$

Therefore,

$$S_i = k_i S = (1.39)(14{,}500) = 20{,}150 \text{ lb/in.}^2$$

and

$$S_o = k_o S = (0.78)(14{,}500) = 11{,}300 \text{ lb/in.}^2$$

Thus with a safety factor of 3 included, the stresses in the extreme concave fiber and in the extreme convex fiber are less than the tensile yield strength of the material (see Table 2.1). Hence the design meets the requirements.

2.2.4 *Lid-lifting device*

The regulations require that if there is a system of lifting devices which is a structural part of the lid only, this system shall be capable of supporting three times the weight of the lid and any attachment without generating stress in any material of the lid in excess of its yield strength. It is further required that, unless rendered useless for lifting during transport of the package, the lid-lifting system or any other system of lifting devices shall conform to the requirements for the package-lifting system.

This cask is equipped with a 1/2-in.-thick stainless steel plate, which is used to prevent access to the top closure plugs. This plate, which weighs ~35 lb, is normally removed by hand; there is no lid-lifting device.

2.2.5 *Tie-down devices*

If there is a system of tie-down devices which is a structural part of the package, the regulations require that this system be capable of withstanding a static force applied to the center of gravity of the package with (1) a vertical component of two times the weight of the package and its contents, (2) a horizontal component along the direction of travel of ten times the weight of the package and its contents, and (3) a horizontal component in the transverse direction of five times the weight of the package and its contents. This applied load shall not generate stresses in any material of the package in excess of the yield strength of that material.

Also, any tie-down device which is a structural part of the package must be designed such that failure of the device under excessive load will not impair the ability of the package to meet other requirements of the regulations.

The package will be tied down to a special trailer as shown in Fig. 1.4. The trailer is capable of carrying the 23,500-lb cask. The cask is bolted to a 1-in.-thick steel deck by means of eight 2-in. bolts. Four 7/8-in.-diam cables may be attached to four of the lifting lugs which are, in turn, fastened to the trailer. In the following tie-down analysis, stresses are examined in the eight bolts, and no credit is taken for the four cable tie-downs.

Tie-down analysis. To analyze the tie-down system, the cask is considered as a hypothetical cantilevered beam. The tie-down bolts are in a circular pattern. For computational purposes, the base is considered to be a circle having a diameter equal to the minimum distance across the flats of the octagon (see Fig. 2.3).

The method used to determine tie-down bolt loadings was derived elsewhere;[9] therefore, only the necessary equations are used here. At the plane of attachment, the cross section of the hypothetical beam consists of the bolts loaded in tension and a strip, α in. in width, loaded in compression as shown in Fig. 2.4. The maximum stress occurs at this plane. Since the geometry is considered to be circular, it is a computational advantage to combine the $5\underline{W}$ and $10\underline{W}$ loads vectorially, as follows:

$$P = [(5\underline{W})^2 + (10\underline{W})^2]^{1/2} = 11.2\ \underline{W}, \tag{2.8}$$

where

$\underline{W}$ = weight of the cask.

The line of action, P, has been taken as the X axis and is rotated from the direction of travel by an angle δ, as shown in Fig. 2.3:

$$\delta = \tan^{-1} 5/10 = 26.6°. \tag{2.9}$$

Using the calculational techniques derived in ref. 9 and Figs. 2.3 and 2.4, the following values were determined:

θ = angle defining edge of neutral axis, 36.6°,

a = distance to neutral axis from edge of plate, 6.61 in.,

I = moment of inertia of section resisting bending, 22,640 in.^{4}.

The neutral axis is shown in Fig. 2.4. The values of the distance from the edge of the baseplate and the neutral axis for the eight bolts are shown in Table 2.2.

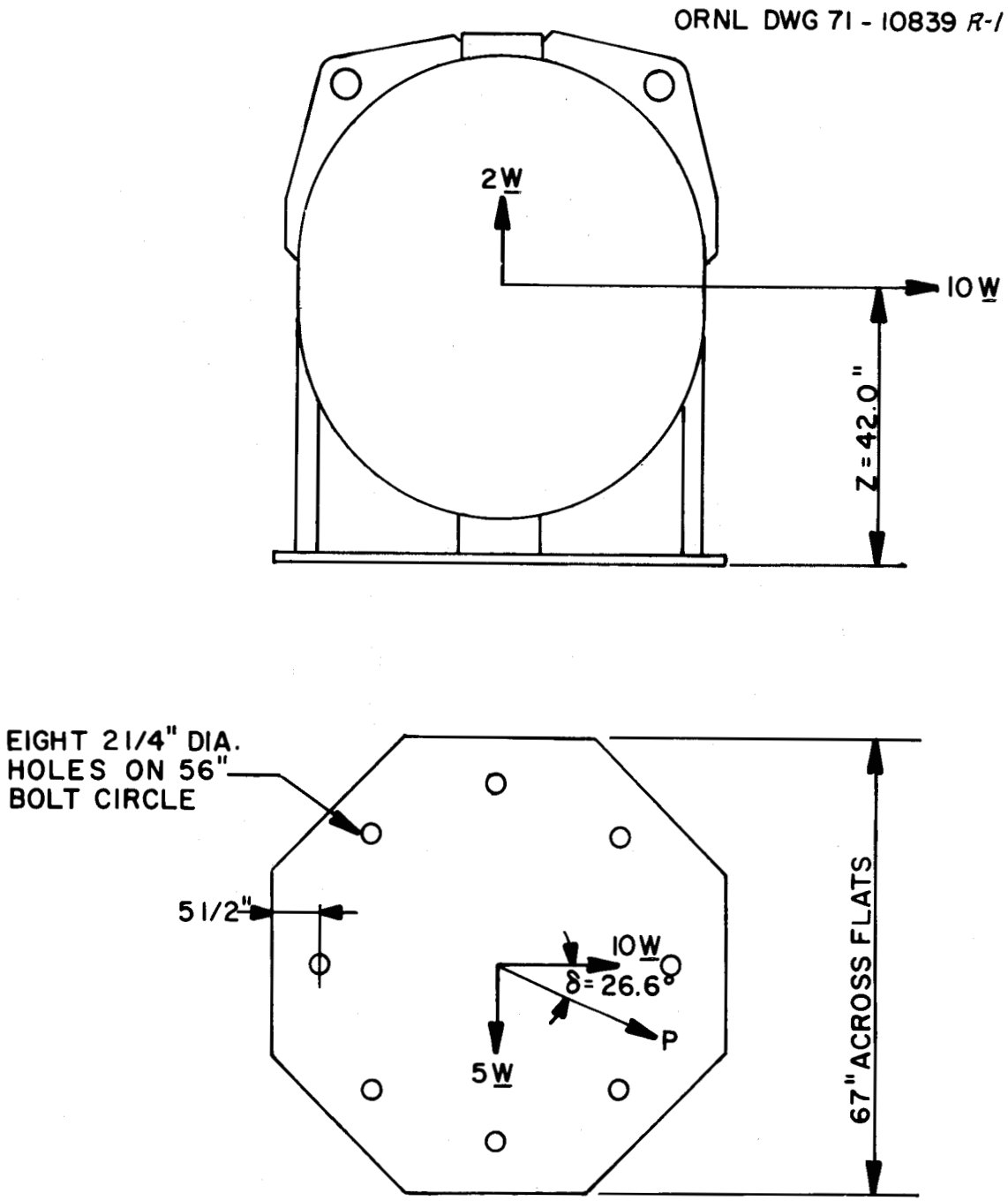

Fig. 2.3 Analysis of the forces imposed on the tie-down bolts.

ORNL DWG 71-10835R2

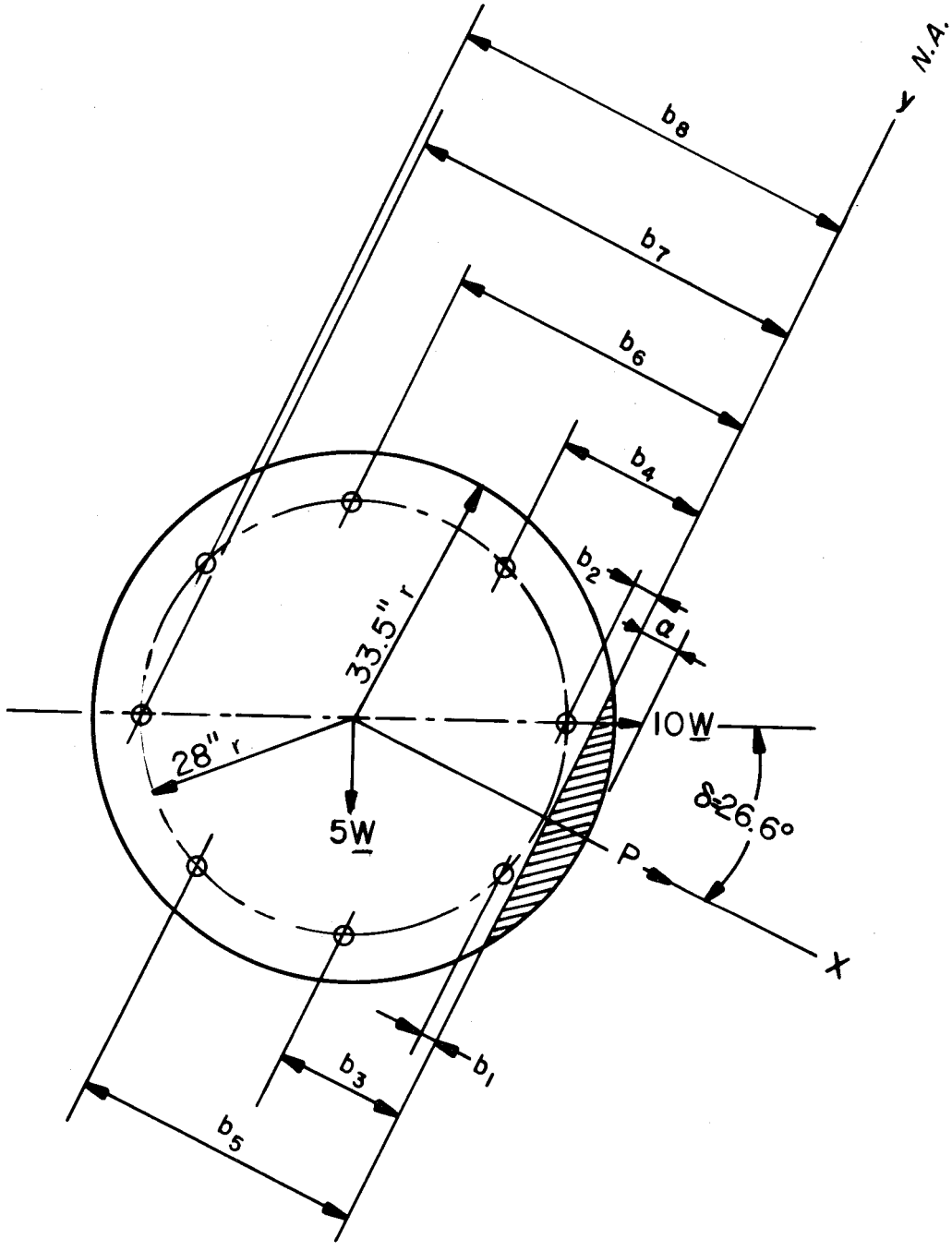

Fig. 2.4 Computational model to determine bolt loadings.

Table 2.2 Values[a] of b and $\bar{b}$

	b	$\bar{b}$ (b − a)	$\bar{b}^2$
b_1 = 33.5 − 28(cos 18.4°) =	6.93	0.32	0.10
b_2 = 33.5 − 28(cos 26.6°) =	8.46	1.85	3.42
b_3 = 33.5 − 28(cos 63.4°)	20.96	14.35	205.92
b_4 = 33.5 − 28(cos 71.6°) =	24.66	18.05	325.80
b_5 = 33.5 + 28(cos 71.6°) =	42.34	35.73	1276.63
b_6 = 33.5 + 28(cos 63.4°) =	46.04	39.43	1554.72
b_7 = 33.5 + 28(cos 26.6°) =	58.54	51.93	2696.72
b_8 = 33.5 + 28(cos 18.4°) =	60.07	53.46	2857.97
Σb =	268.00	Σb^2 =	8921.28

[a]Values are defined as follows: b = distance, center-line bolt from edge of plate, in inches; $\bar{b}$ = distance, center-line bolt from neutral axis y, in inches.

The bending stress, S_B, in the most distant bolt from the neutral axis can be calculated from these data as follows:

$$S_B = PZb_8/I \tag{2.10}$$

$$= 11.2(23{,}500)(42.0)(53.46)/22{,}640 = 26{,}100 \text{ psi},$$

where

P = combined X and Y loads [see Eq. (2.8)],

Z = moment arm, 42 in.,

b_8 = distance neutral axis to most distant bolt, 53.46 in.

The direct tensile stress, S_t, distributed equally in all bolts, is obtained from

$$S_t = 2\underline{W}/NA = 2(23{,}500)/8(2.50) = 2350 \text{ psi}, \tag{2.11}$$

where

N = number of bolts, 8,

A = cross-sectional area of bolt, 2.50 in.^{2} (ref. 10).

The shearing stress, S_s, distributed equally in all bolts, neglecting friction, is obtained from

$$S_s = P/NA = 11.2\ (23{,}500)/8\ (2.50) = 13{,}160 \text{ psi}. \tag{2.12}$$

Using Mohr's circle of stress, the maximum stress in the most stressed bolt (S_m) is determined as follows:

$$S_m = [(S_B + S_t)/2] + [((S_B + S_t)/2]^2 + S_s^2]^{1/2} \tag{2.13}$$

$$= [26{,}100 + 2350/2] + [(26{,}100 + 2350/2)^2 + (13{,}160)^2]^{1/2}$$

$$S_m = 33{,}600 \text{ psi}.$$

Thus it is concluded that the tie-down system meets the requirements of the regulations, since the computed maximum stress of 33,600 psi is less than the yield strength (35,000 psi) for the mild-steel bolts used.

2.3 Standards for Type B and Large Quantity Packaging

The structural standards for large quantity packaging of the regulations cover load resistance of the packaging and the external pressure which the package must withstand. Compliance of the TRU Californium Shipping Container with these requirements is discussed in the following subsections.

2.3.1 *Load resistance*

When regarded as a simple beam supported at its ends along any major axis, the container must be capable of withstanding a static load, normal to and uniformly distributed along its length, that is equal to five times its fully loaded weight without generating stress in any material of the cask in excess of the yield strength of that material. The TRU Californium Shipping Container is almost spherical; therefore, this requirement is not applicable.

2.3.2 *External pressure*

The regulations require that the design of the shipping package be adequate to ensure that the containment vessel will suffer no loss of contents if subjected to an external pressure of 25 psig.

Spherical shell. The maximum external pressure that may be withstood by the 1/2-in.-thick stainless steel spherical shell, assuming no support from the reinforcing steel or from the concrete, may be calculated (Par. UG-28(d), ref. 11) as follows:

$$P_a = B/r_1/t_h = 10{,}000/32.5/0.5 = 154 \text{ psig}, \tag{2.14}$$

where

P_a = allowable working pressure, psia,

B = factor, 10,000 (Fig. UNF-28.8, ref. 11),

r_1 = inside radius of spherical shell, 32.5 in.,

t_h = thickness of spherical shell, 0.5 in.

The spherical shell of the cask is, therefore, sufficiently thick to withstand a 25-psi external pressure; however, in addition, the internal reinforced concrete shield completely eliminates the possibility that the shell will buckle under external pressure.

Top and bottom closure plates. The maximum external pressure (P) that may be withstood by the 1/2-in.-thick stainless steel flange closure above and below the access plugs may be calculated (Par. UG 34(c)(2), ref. 11) as follows:

$$P = St^2/cd^2 = 13{,}300\ (0.5)^2/0.25\ (16.75)^2 = 47 \text{ psig}, \tag{2.15}$$

where

S = maximum allowable stress value, 13,300 psig, (Table UHA-23, ref. 11),

t = thickness of cover, 0.5 in.,

c = attachment factor, 0.25,

d = diameter of the bolt circle, 16.75 in.

The top and bottom closure flange is, therefore, sufficiently thick to withstand an external pressure of 25 psig.

All openings to the cask cavity are gasketed and are not expected to leak under an external pressure of 25 psig. Hence the regulations are met.

3. COMPLIANCE WITH STANDARDS FOR NORMAL CONDITIONS OF TRANSPORT

The regulations stipulate that a single package must be able to withstand the normal conditions of transport without substantially reducing the effectiveness of the package and without releasing radioactive material from the containment vessel. The contents of the container are limited such that the package will contain no gases or vapors that could reduce the effectiveness of the packaging. No circulating coolant other than atmospheric air is used, and no mechanical cooling device is required or provided. The TRU Californium Shipping Container and its inner containers are designed so that the contents will not be vented to the atmosphere under normal conditions of transport. These normal conditions include the effects of heat, cold, pressure, free drop, and penetration.

3.1 Heat

The package must be able to withstand direct sunlight at an ambient temperature of 130°F in still air without reducing the effectiveness of the packaging. A computer program, a modified version of HEATING-3 (ref. 13) capable of accounting for phase change in materials and applicable to the IBM 360 computer, was used to compute the steady-state temperature distribution in the cask and its contents under the specified conditions.

3.1.1 *Thermal properties of materials*

The thermal properties of materials used to compute the temperature distribution are listed in Table 3.1.

3.1.2 *Thermal model*

The computational model representing the TRU Carrier is illustrated in Fig. 3.1. The contents were modeled as a homogenous cylinder with the decay-heat generation rate of 50 W uniformly distributed throughout the volume.

As the HEATING-3[13] code cannot be used to model a sphere, the exterior surface was modeled using a group of concentric cylinders whose outside surfaces approximated the surface of a sphere. The radius and length of these cylinders were chosen so that the resulting surface had the same surface area as that of the actual cask. Natural convection heat transfer coefficients for a sphere were used for the exterior of the cask.

Convection, radiation, and conduction were assumed to transfer heat across large air gaps in heat transfer model, except in cases where, because of the combination of narrow gaps and small temperature differences, it can be shown that heat convection contributes essentially nothing to the heat transfer process.

Table 3.1. Thermal properties of materials used to compute temperature distribution

Material	Temperature (°F)	Thermal conductivity Btu $hr^{-1}ft^{-1}(°F)^{-1}$	Density lb $in.^{-3}$	Heat capacity Btu $lb^{-1}(°F)^{-1}$
Fuel		6.62	0.0978	0.214
Seal		0.143	0.0347	0.469
SST 304L	32.0	7.736	0.282	0.130
	212.0	9.428		
	932.0	12.571		
	1292.0	14.989		
	1472.0	15.000		
Air	32.0	0.017	4.11×10^{-5}	0.240
	212.0	0.018		
	392.0	0.022		
	572.0	0.026		
	752.0	0.029		
Concrete	—	0.600	0.090	0.21

In calculating the steady-state temperatures for the 130°F environment in direct sunlight, it was assumed that a solar heat flux of 144 Btu/hr-ft^2 was incident solar flux that is absorbed by the cask is equal to the absorptivity (0.6) of the outer surface of the cask. A second steady-state analysis was made assuming (1) the ambient temperature was 100°F and (2) the solar heat load was reduced to zero.

3.1.3 *Maximum temperatures*

Calculated temperatures of points of interest throughout the cask are presented in Table 3.2 for the 130°F ambient plus solar heat load case as well as for the 100°F ambient-shade case. In this latter case, the maximum accessible surface temperature was calculated as 101°F. Since this is less than the 122°F limit specified by the DOT regulations,[14] the container does not require exclusive use shipping conditions and complies with the regulations.

For the 130°F ambient-solar heat load case, the maximum calculated temperature was 274°F. Since this temperature is well within the operating limits of all gaskets and seals, the integrity of the cask, as well as the inner container, will be essentially unaffected by these thermal boundary conditions. Therefore, the container complies with the regulations.

Table 3.2. Calculated temperatures (in °F) throughout the cask

	Environment	
Location[a]	100°F Shade	130°F Direct sunlight
A. Contents	194°	274°
B. Concrete	113°	198°
C. Concrete	105°	190°
D. Outer surface	101°	186°
E. Outer surface	101°	186°
F. Outer surface	101°	186°
G. Concrete	109°	194°
H. Upper seal	162°	244°
I. Lower seal	155°	238°

[a]These locations are identified with corresponding letters in Fig. 3.1.

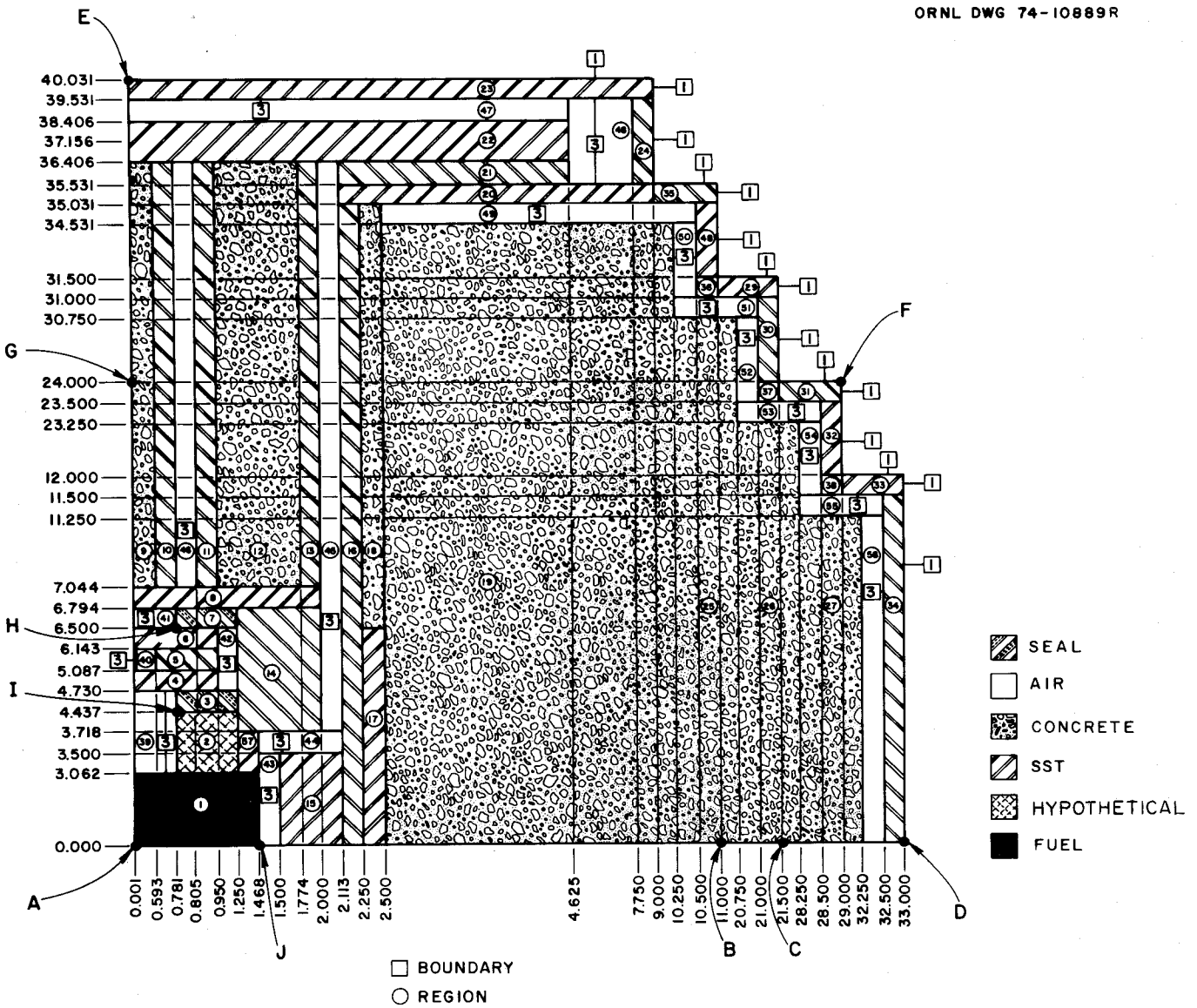

Fig. 3.1 TRU Californium Shipping Container computational model to determine temperature distributions under normal transport and hypothetical accident conditions.

3.1.4 *Thermal expansion stresses*

A temperature distribution exists from the cask center to its surface. A higher temperature exists in the through tube since the heat source is in the cavity and the heat flows readily up the tube, causing it to expand while it is being restrained by the outer steel shell. The differential temperature under normal transport conditions is found to be 93°F (see Table 3.2, 100°F shade condition).

The stress in the tube can be computed as described below using the drawings shown in Fig. 3.2.

The maximum strain is given by

$$\epsilon = \alpha \Delta\tau = (9.9 \times 10^{-6})(47) = 4.6 \times 10^{-4} \text{ in./in.}, \tag{3.1}$$

where

α = thermal coefficient of expansion, 9.9×10^{-6} in./in./°F,

$\Delta\tau$ = average temperature through tube 194 - 101/2, 47°F,

$$\sigma = E\epsilon = (30 \times 10^{6})(4.6 \times 10^{-4}) = 13{,}800 \text{ psig}, \tag{3.2}$$

where

E = Young's modulus, 30×10^{6} psig.

The load (P) per unit circumferential length for the 4-in. pipe is represented by

$$P = \sigma T = 13{,}800\ (0.237) = 3270 \text{ lb/in.}, \tag{3.3}$$

where

T = thickness of the 4-in. Sched-40 through tube, 0.237 in.

Using Timoshenko's[15] equation for a sphere with a uniformly distributed load P per length applied to the upper edge and assuming the sphere weightless:

$$\sigma = P \sin \varphi_o / h \sin^2\varphi = (3270)(\sin 8.68°)/(0.50)(\sin 14°)^2, \tag{3.4}$$

where

φ_o = angle from center to point of P application, 8.68°,

φ = angle from center to stress point, 14°,

ORNL DWG. 75-95

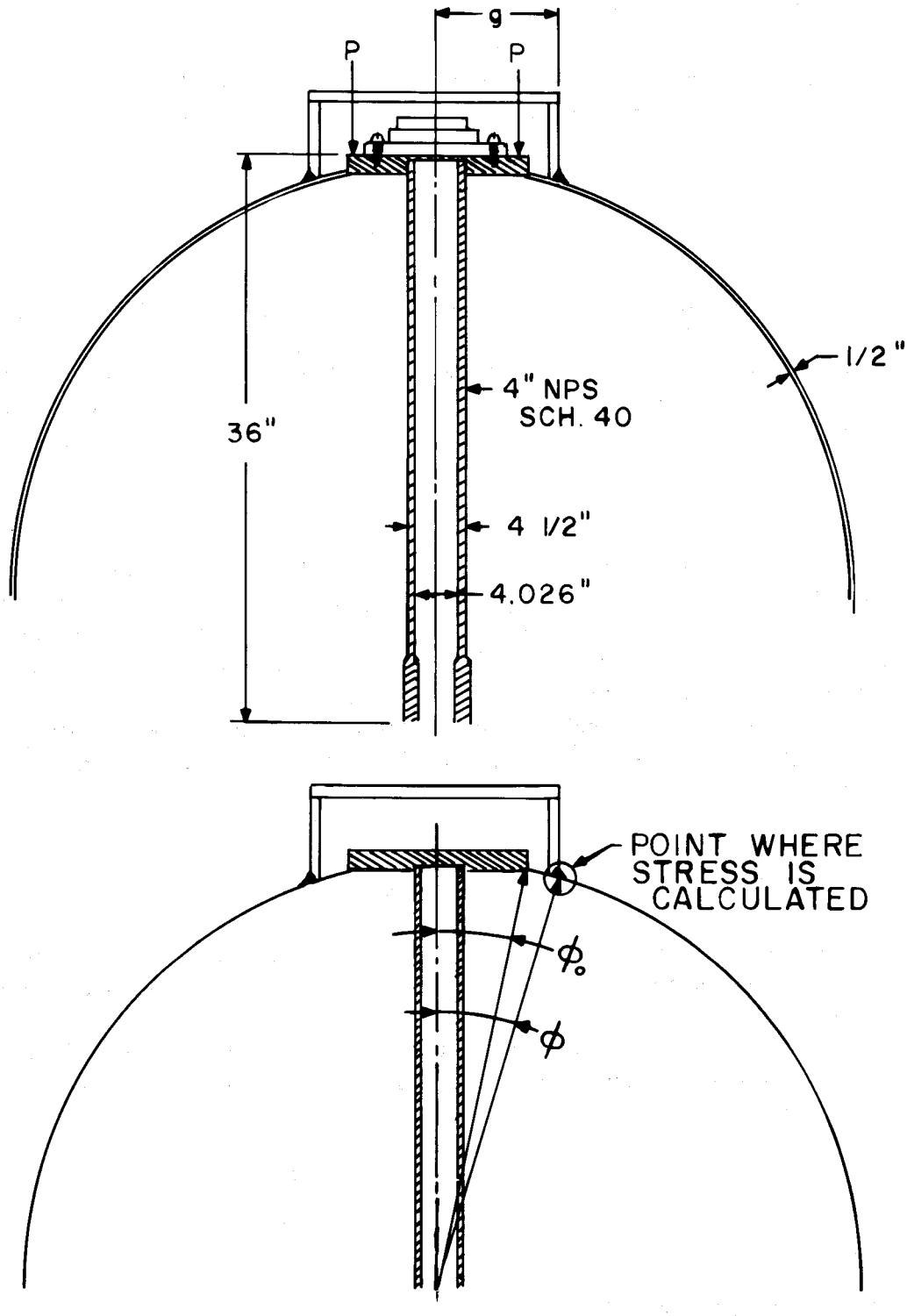

Fig. 3.2 Sketch and dimensions used to determine thermal stresses.

h = shell thickness, 0.50 in.,

σ = 3270(0.151)/(0.50)(0.0585) = 16,900 psig.

Since the stress due to the maximum thermal differential is less than the yield stress (see Table 2.1), the through tube should suffer no damage due to the loads imposed by the thermal stress.

3.2 Cold

The shipping package must be able to withstand an ambient temperature of -40°F in still air and shade.

Taking T_1 = -40°F (420°R) and assuming no internal heat load, the final or maximum pressure (P_2) in any cavity sealed at a pressure of 14.7 psia and a temperature of 70°F (530°R) is

$$P_2 = (P_1T_2)/T_1 = 11.65 \text{ psia.} \tag{3.5}$$

The resulting pressure differential is less than the 25-psig differential pressure investigated in Sect. 2.3.2. A temperature of -40°F is within the operating temperature range of the seals and the stainless steel cladding, structural components, and fasteners. Brittle fracture of these components under the stipulated cold condition is unlikely because the temperatures of these components are above their ductile-to-brittle transition temperatures.

The above considerations indicate that the stipulated cold conditions will not reduce the effectiveness of the packaging, and that the container conforms to the requirements for the cold condition of normal transport.

3.3 Pressure

The regulations for normal conditions of transport specify that the package be able to withstand an atmospheric pressure of 0.5 times the standard atmospheric pressure, the resulting pressure being 7.35 psia.

When the model is under full heat load, trapped air in all sealed cavities will expand and exert internal pressures. Assuming assembly at 70°F and 14.7 psia, the resulting pressure of any trapped air is

$$P_2 = (P_1T_2)/T_1 = (14.7)(T_2)/530 = 0.0277\ T_2, \tag{3.6}$$

where

P_1 = assembly pressure, 14.7 psia,

T_2 = temperature under heat load, °R,

T_1 = assembly temperature, 530° R.

The pressures shown in Table 3.3 were calculated by the above formula and refer to the model shown in Fig. 3.1. They are based on both the 100° F shade and still air and the 130° F direct sunlight environments. The maximum pressure generated is 5 psig for the inner container at 130° F in direct sunlight.

The cask and its gasketed seals will be able to withstand these pressures without damage or reduction in the effectiveness of the packaging. Additionally, the container conforms to the requirement for the reduced pressure condition of normal transport.

3.4 Vibration

The container is of welded construction, and vibrations received in transit are not expected to affect the integrity of the weldment. All fasteners are equipped with lock washers and are not expected to loosen during such vibrations.

In addition, the cask, built several years ago, has operated in the transportation environment, suffering no ill effects as a result of vibrations encountered.

3.5 Water Spray

The containment capabilities of the TRU Californium Shipping Container are not compromised by water spray since all external surfaces are of stainless steel. The closure seal is impervious to water.

3.6 Free Drop

The regulations for normal conditions of transport require that a package weighing more than 20,000 lb be capable of withstanding a free drop through a distance of 2 ft onto a flat, essentially unyielding, horizontal surface, striking the surface in a position in which maximum damage is expected to result. A free drop of the TRU Californium Shipping Container through a distance of 2 ft is expected to produce a denting of the outside steel shell and possibly some slight fracturing of the concrete. Any concrete that might be fractured will be contained, and no reduction in effectiveness of the package or loss of contents is expected to occur due to the 2-ft free drop. Analysis of the hypothetical accident 30-ft free drop (Sect. 4.1) indicates that damage (if any) from a 2-ft drop will be insignificant.

Table 3.3. Pressures in internal air gaps

Region[a]	100°F Environment		130°F Environment	
	T_{air} (°F)	Pressure (psig)	T_{air} (°F)	Pressure (psig)
39	170	2.8	250	5.0
43	165	2.6	250	5.0
44	155	2.3	238	4.6
45	130	1.6	215	4.0
47-56	100	0.8	187	3.2

[a]See Fig. 3.1.

3.7 Penetration

The regulations for normal conditions of transport stipulate that the package must be capable of withstanding the impact of the hemispherical end of a vertical steel cylinder which weighs 13 lb, has a 1-1/4-in. diam, and is dropped from a height of 40 in., typically onto the exposed surface of the package that is expected to be the most vulnerable to puncture.

The maximum energy imparted to the cask is 520 in.-lb. Approximately 50,000 in.-lb is required to deform 1 in.^{3} of stainless steel; therefore, the energy of impact would deform about 0.0104 in.^{3} of material. If the hemispherical head of the impactor struck the stainless steel shell, the depth of penetration would not exceed the depth of a spherical sector having a volume of 0.0104 in.^{3}. The volume of a spherical segment of one base is

$$V = (1/3)\pi h(3rh - h^2), \tag{3.7}$$

where

h = height of segment (or depth of penetration), in., and

r = radius of sphere, 0.625 in.

The preceding equation becomes

$$h^3 - 1.875h^2 + 9.93 \times 10^{-3} = 0. \tag{3.8}$$

This gives a maximum depth of penetration of 0.074 in. Damage of this magnitude would not reduce the effectiveness of the cask. This actual test was performed on the cask and no damage resulted to it.

3.8 Compression

Since the weight of the TRU Californium Shipping Container exceeds 10,000 lb, this section is not applicable.

4. COMPLIANCE WITH STANDARDS FOR HYPOTHETICAL ACCIDENT CONDITIONS

The standards for the hypothetical accident conditions stipulate that a container used for the shipment of fissile or large quantities of radioactive material shall be designed and constructed in such a manner and its contents limited so that, if it is subjected to the specified free-drop, puncture, thermal, and water-immersion conditions, the following requirements would be met:

1. The reduction in shielding would not be sufficient to increase the external radiation dose rate to more than 1000 mR/hr at a distance of 3 ft from the outside surface of the package.
2. No radioactive material would be released from the package except for gases containing total radioactivity not to exceed 0.1% of the total radioactivity of the contents of the package.
3. The contents would remain subcritcal.

4.1 Free Drop

The first in the sequence of hypothetical accident conditions to which the cask must be subjected is a free drop through a distance of 30 ft onto a flat, essentially unyielding, horizontal surface, striking the surface in a position in which the maximum damage is expected to occur. Since the cask is essentially a sphere, three orientations will be considered: (1) a random drop on the rounded stainless steel outer shell, (2) a drop on the top to test the bolts holding the top plugs, and (3) a drop on the bottom to test the bolts holding the bottom plugs.

4.1.1 *Drop on rounded stainless steel outer shell*

When the TRU Californium Shipping Container is dropped on the rounded outer stainless steel shell, the energy will be absorbed by bending the outer shell and crushing or cracking the concrete.

Very little information is available in the literature concerning the impact of heavy concrete pieces on essentially unyielding stationary objects. However, a series of tests were performed at the Brookhaven National Laboratory with three unencased reinforced concrete waste shipping containers. These containers, which weighed ~10 tons, were dropped 30 ft onto a 10-in.-thick slab of armor plate.[16] These containers had wall thicknesses of 6 in., 12 in., and 17 in. Containers that had wall thicknesses of 12 in. or 17 in. passed the drop test, with the latter one showing only hairline cracks and essentially no loss of shielding.

The Californium Shipping Container is shielded with 30 in. of reinforced concrete completely encased in a 1/2-in.-thick stainless steel outer shell and weighs 11.75 tons. Thus this container weighs approximately the same as the concrete waste shipping containers that were tested, has almost twice the shielding thickness, and has a thick outer steel shell that will help spread the impact forces over a broad area of the cask surface. It is, therefore, concluded that the Californium Shipping Container will suffer only localized damage to the outer shell and concrete at the point of impact and that no significant cracks will occur in the shielding. Hence the cask dropped in this manner will meet the hypothetical accident requirements of a 30-ft drop.

4.1.2 *Drop on top flange*

The possibility of failure of the bolts which hold the top concrete shielding plugs in the cask was investigated. It was assumed that the cask was dropped, upside down, on its top flange, from a height of 30 ft onto a solid, essentially unyielding surface. Under these conditions the wall of the cupola (to which the top flange is bolted) and the 1-in.-thick lifting ribs would deform, absorbing the kinetic energy of the cask. An analysis was made using the equations given in Sect. 9.3.

Results indicate that the cupola would crush approximately 1 in. before all kinetic energy would be absorbed. This is not possible because after collapsing 0.5 in. the top flange would come in direct contact with the bolted plug flanges. At this time of contact, the number of *g*'s experienced by the cask would rapidly increase, the cask would come to rest in less than the remaining 0.5 in. predicted in the analysis, and the plug flanges would be driven back into the body of the cask. The predicted *g* loading of the cask, shown in Fig. 4.1 as a function of deformation, should be realistic up to the point at which the top flange encounters the plug flanges. Under these conditions the bolts holding the plugs in place will have to resist about 425 *g*'s before the plugs are driven back into the cask body. Therefore, the force to be resisted by the bolts becomes

$$F = ma, \tag{4.1}$$

where

m = mass of the plugs, 3.60 slugs,

a = maximum acceleration experienced by the plugs, ft/sec^2, 425 *g*.

Substituting, the applied load is

$$F = (3.60)(425)(32.2) = 49{,}200 \text{ lb}.$$

The area of metal in tension by this force is the stress area of the eight bolts. The area of the bolts under stress is

$$A = NA = (8)(0.122) = 0.976 \text{ in.}^2, \tag{4.2}$$

where

N = number of bolts, 8,

A = area of bolt, 0.122 sq in.^{2}

The total load-bearing capacity of the bolts is determined from

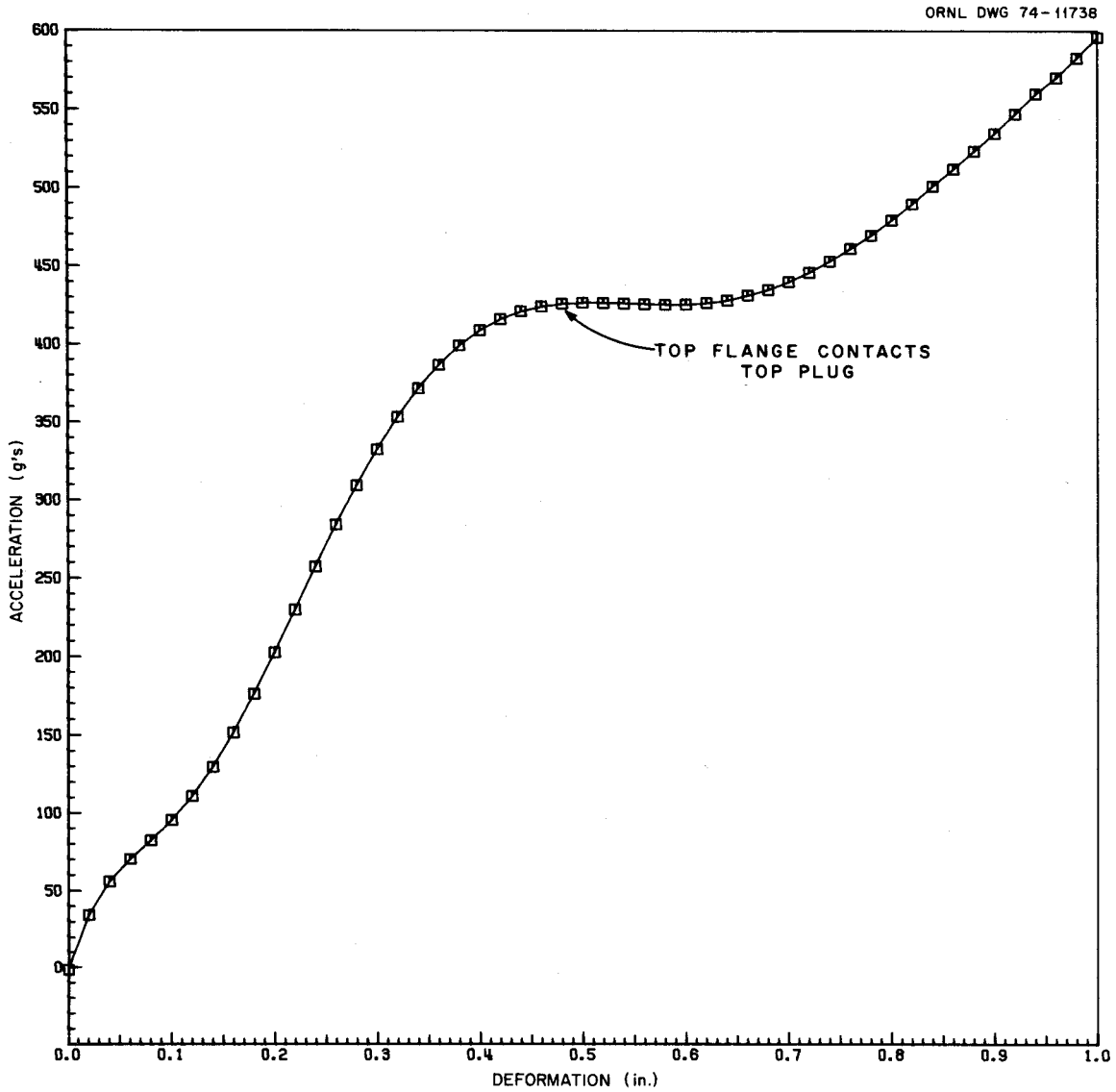

Fig. 4.1 Acceleration vs deformation as a result of computer analysis of 30-ft drop on top flange.

$$F_{max} = A\sigma_s, \tag{4.3}$$

where

σ_s = yield strength of stainless steel, 61,200 psi (see Table 2.1, footnote e),

F_{max} = (0.976)(61,200) = 59,700 lb.

Since F_{max} is greater than the applied load, the plugs will remain attached to the cask, and the contents will remain in the cavity.

4.1.3 *Drop on bottom flange*

The possibility of failure of the bolts which hold the bottom shielding plugs in the cask was investigated. It was assumed that the cask was dropped base down from a height of 30 ft onto a solid, essentially unyielding surface. Under these conditions, the walls of the cupola, the base plate (to which the bottom flange is bolted), the eight 1-in.-thick webs, and the eight struts–all would be deformed, absorbing the kinetic energy of the cask. An analysis was made using the equations given in Sect. 9.3.

Results indicate that the cupola would crush approximately 0.6 in. before all the kinetic energy would be absorbed. The relationship between acceleration and deformation for the drop onto the bottom flange is shown in Fig. 4.2. Additional clearance at the bottom flanges due to the offset bottom cupola cover. Under these conditions, the bolts holding the plugs in place will have to resist about 1000 g's. Therefore, the force to be resisted by the bolts is

$$F = ma, \tag{4.4}$$

where

m = mass of the plugs, 3.60 slugs,

a = maximum acceleration experienced by the plugs, ft/sec^2, 1000 *g*.

Substituting,

$$F = (3.60)(1000)(32.2) = 115{,}900 \text{ lb}.$$

The area of metal in tension by this force is the stress area of eight turned down 1/2-in. bolts. The area of the bolts under stress is 0.976 in.,^{2} as indicated in Eq. (4.2).

The total load-bearing capacity (F_{max}) of the bolts was determined to be 59,700 lb, as indicated in Eq. (4.3). Since F_{max} is less than the applied load, the bolts will fail and the ends of the plugs will drop into the bottom closure cover (see Fig. 1.1).

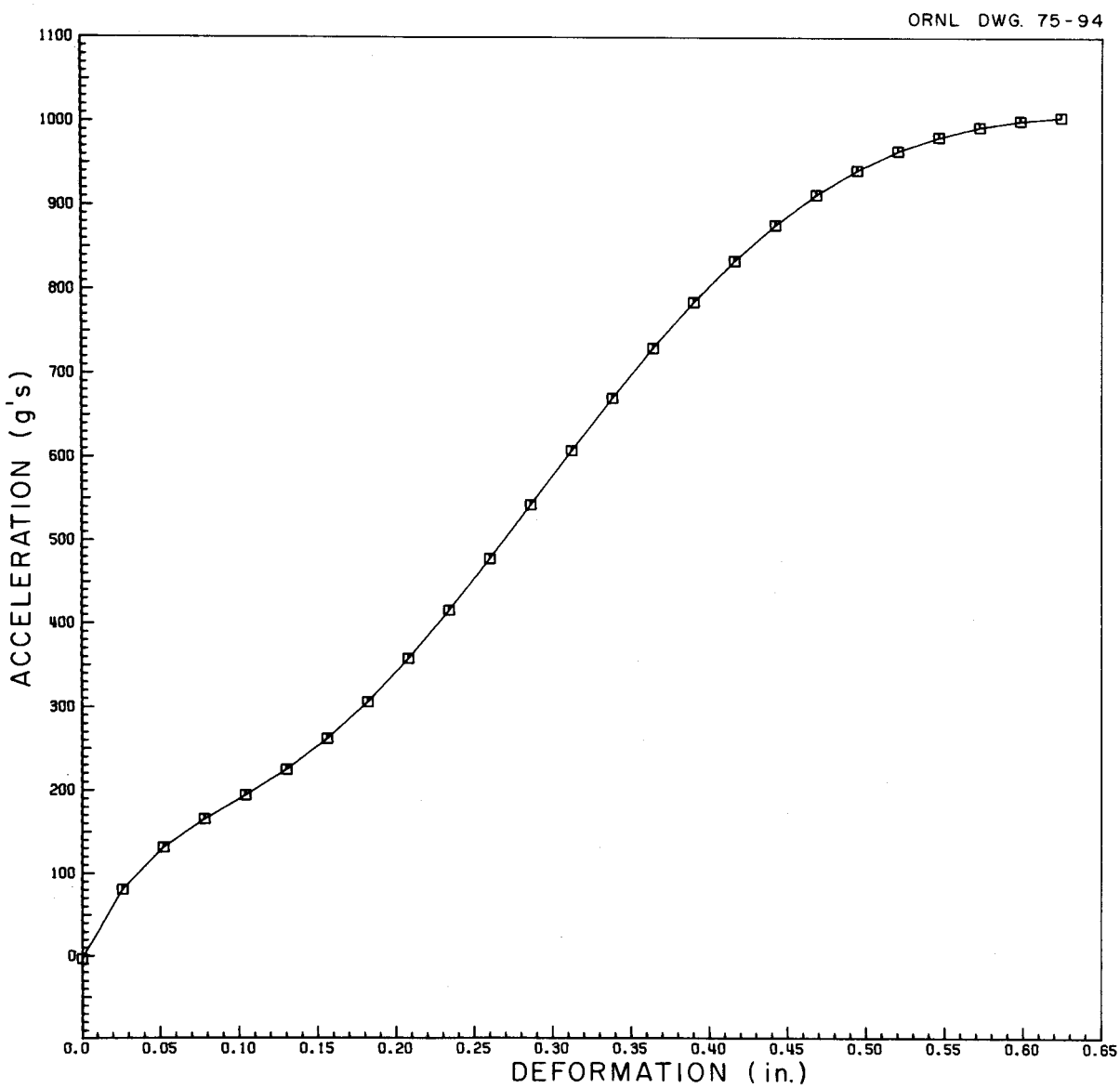

Fig. 4.2 Acceleration vs deformation as a result of computer analysis of 30-ft drop on bottom flange.

The bottom cover plate is retained by twelve 1/2-in. cap screws which have the following load-bearing capacity:

$$F_{max} = NA\sigma_s = 12(0.142)(61{,}200) = 104{,}300 \text{ lb}, \tag{4.5}$$

where

N = number of bolts, 12,

A = area of bolts, 0.142 in.^{2} (ref. 10),

σ_s = tensile strength of stainless steel, 61,200 psig (see Table 1).

The load bearing capacity of these bolts will hold the plugs from further travel. The bottom closure cover is a gasketed sealed cavity, and the inner container upon which containment depends is still retained in the cavity essentially without movement. No loss of containment or appreciable loss of shielding is anticipated.

4.2 Puncture

The second in the sequence of hypothetical accident conditions to which the cask must be subjected is a free drop through a distance of 40 in. to strike, in a position in which maximum damage is expected, the top end of a vertical mild-steel bar mounted on an essentially unyielding, horizontal surface. The mild-steel bar shall have a diameter of 6 in. with the top horizontal and its edge rounded to a radius of 1/4 in., and the bar shall be of such length that it will cause maximum damage to the cask but not less than 8 in. long. The long axis of this bar shall be normal to the surface of the cask upon impact.

To analyze the puncture accident, a rather conservative model can be used which considers all the energy absorbed by the cask is absorbed by the outer stainless steel shell with no consideration given to the concrete shielding.

The energy of impact will be absorbed by the 6-in.-diam mild-steel bar and the 1/2-in.-thick cask outer shell. Figure 4.3 illustrates the configuration for this computational model. The absorbed energy U = $\underline{W}$h = (23,500)(40) = 940,000 in.-lb, and

$$U = \underline{W}h = U_{SS} + U_{MS} = F_{SS}\Delta_{SS} + F_{MS}\Delta_{MS} = \sigma_{SS}A\epsilon_S L_{SS} + \sigma_{MS}A\epsilon_{MS}L_{MS}, \tag{4.6}$$

where

U = energy, in.-lb,

$\underline{W}$ = weight of cask, 23,500 lb,

h = drop height, 40 in.,

ORNL DWG 74-12623

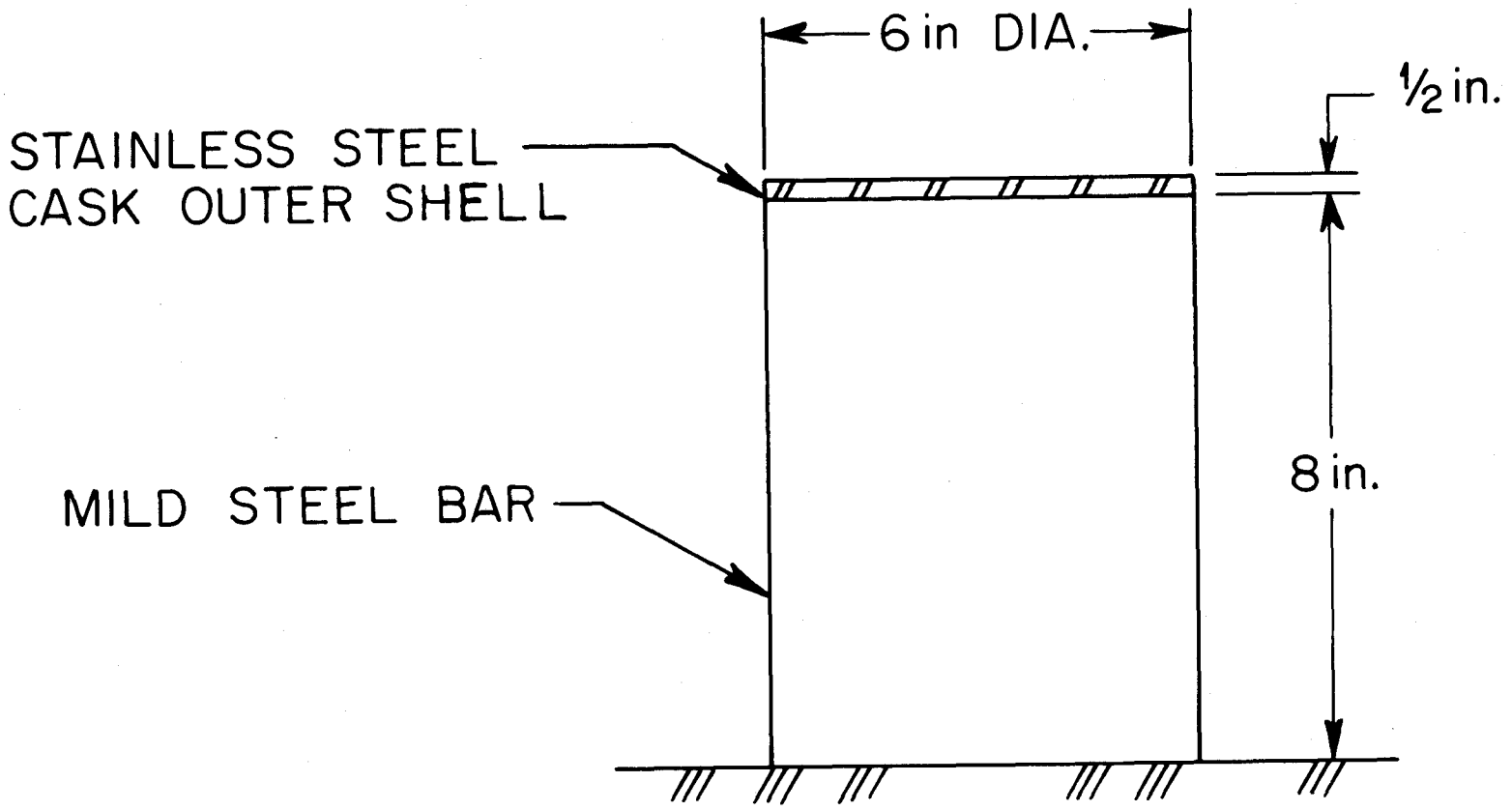

Fig. 4.3 Model used for puncture analysis.

F = force, lb,

Δ = deformation, in.,

σ = stress, psig,

A = undeformed cross-section area of member, in.^{2},

ϵ = strain, in./in.,

L = undeformed length of member, 0.5 in.,

SS = subscript for stainless steel,

MS = subscript for mild steel.

Since the force is the same in both members, we can write

$$\sigma_{SS}A = \sigma_{MS}A,$$

and since the areas are the same,

$$\sigma_{SS} = \sigma_{MS} = \sigma.$$

Then Eq. (4.6) becomes:

$$U = \sigma A(\epsilon_{SS}L_{SS} + \epsilon_{MS}L_{MS}). \tag{4.7}$$

For plastic deformation of stainless steel and mild steel, simple stress-strain relations can be written as[17]

$$\sigma_{SS} = (4.33 \times 10^5)\epsilon_{SS} + 60{,}000 \tag{4.8}$$

and

$$\sigma_{MS} = (2.56 \times 10^5)\epsilon_{MS} + 60{,}000. \tag{4.9}$$

Rearranging yields the following result:

$$\epsilon_{SS} = (\sigma_{SS} - 60{,}000)/(4.33 \times 10^5) \tag{4.10}$$

and

$$\epsilon_{MS} = (\sigma_{SS} - 60{,}000)/(2.56 \times 10^5). \tag{4.11}$$

Substitution of Eqs. (4.10) and (4.11) into Eq. (4.7) and eliminating the material subscripts yields a quadratic equation as follows:

$$\sigma^2 - (6.0 \times 10^4)\sigma - (1.694 \times 10^7) = 0, \qquad (4.12),$$

which yields the result $\sigma = 60{,}281$ psig.

The strain on the stainless steel cask shell is

$$\epsilon_{SS} = (60{,}281 - 60{,}000)/(4.33 \times 10^5) = 0.00065 \text{ in./in.},$$

and the deformation is

$$\Delta_{SS} = \epsilon L = (0.00065)(0.50) = 0.000325 \text{ in.} \qquad (4.13)$$

From Newton's second law, the peak acceleration is

$$a_{max} = F/m = Fg/\underline{W} = \sigma Ag/W = [(60{,}281)(\pi)(6)^2(g)]/[(4)(23{,}500)] = 72.5\ g. \qquad (4.14)$$

This acceleration is less than that associated with the end impact resulting from the 30-ft free drop discussed in Sect. 4.1, and it is therefore concluded that the inner container will continue to provide containment under the puncture accident condition.

The stainless steel outer shell will deform plastically; however, because of the support from the concrete, it will not rupture. Impact-induced cracks that may occur in the concrete shielding material are intergranular in nature, thus offering a labyrinth path for radiation without reducing the shielding properties.

4.3 Thermal Evaluation

4.3.1 *Hypothetical thermal accident condition discussion*

The third in the sequence of hypothetical accident conditions specified by the regulations to which the cask must be subjected is a 30-min exposure to a source of radiant heat having a temperature of 1475°F and an emissivity coefficient of 0.9 or equivalent. For calculational purposes, it shall be assumed that the package has an absorption coefficient of 0.8. The package shall not be cooled artificially until after the 30-min test period and the temperature at the center of the package has begun to fall, or until 3 hr following the test period.

A computer program, HEATING-3, which has been modified to evaluate the phase change of materials and is applicable to the IBM 360 computer, was used to determine the temperature distribution when exposed to these thermal environments.

It was assumed that the container was loaded with the maximum permissible decay heat load of 50 W. The temperature distribution from 100°F ambient condition was input as starting temperatures for the accident (fire) calculation.

The damage from the free drop and puncture portions of the hypothetical accident would not adversely affect the performance of the container in the hypothetical thermal accident. Hence the undamaged configuration was assumed.

4.3.2 *Thermal properties of materials*

The thermal properties of materials used to compute the temperature distribution under steady-state and transient conditions are listed in Table 3.1 (see Sect. 3.1.1).

4.3.3 *Thermal accident analysis*

The computational model previously used and described in Sect. 3.1.2, representing one-fourth of the container, was assumed for the thermal accident analysis. The HEATING-3 computer program was used to determine the temperature distribution in the container that would result from the prescribed 30-min thermal exposure; the material constants given in Table 3.1 were used as computer input. The steady-state temperature distribution computed for the heat condition of normal transport (100°F ambient-shade) was taken as the starting point, and internal heat generation was included in the transient analysis.

4.3.4 *Container temperatures*

The results of the computer analysis are presented graphically in Fig. 4.4. Cask temperatures are followed for 3 hr after the conclusion of the fire since regulations specify that the cask cannot be artificially cooled prior to this time unless the temperature in the center of the cask has begun to fall.

Throughout the entire test period, the mid-point temperature of the cask remained about constant (i.e., 195°F). Following the fire, the outer parts of the cask cooled rapidly; after 3 hr, the maximum calculated temperature in the cask was 345°F, located approximately in the top inner plug plate. It is apparent that the inner container fuel contents will remain at a temperature of ~195°F. Such a temperature will cause no problems to the contents; nor will it have any significant (degrading) effect on the seals of the inner containers. Consequently, if the cask is subjected to the high-temperature thermal environment, it is capable of withstanding it with no loss of contents and, therefore, meets this part of the regulations.

5. CONTAINMENT

Sources and other shipments are confined inside the inner cavity of the TRU Californium Shipping Container in either a special-form or a 2R container. These containers–their uses and inspections–are described below.

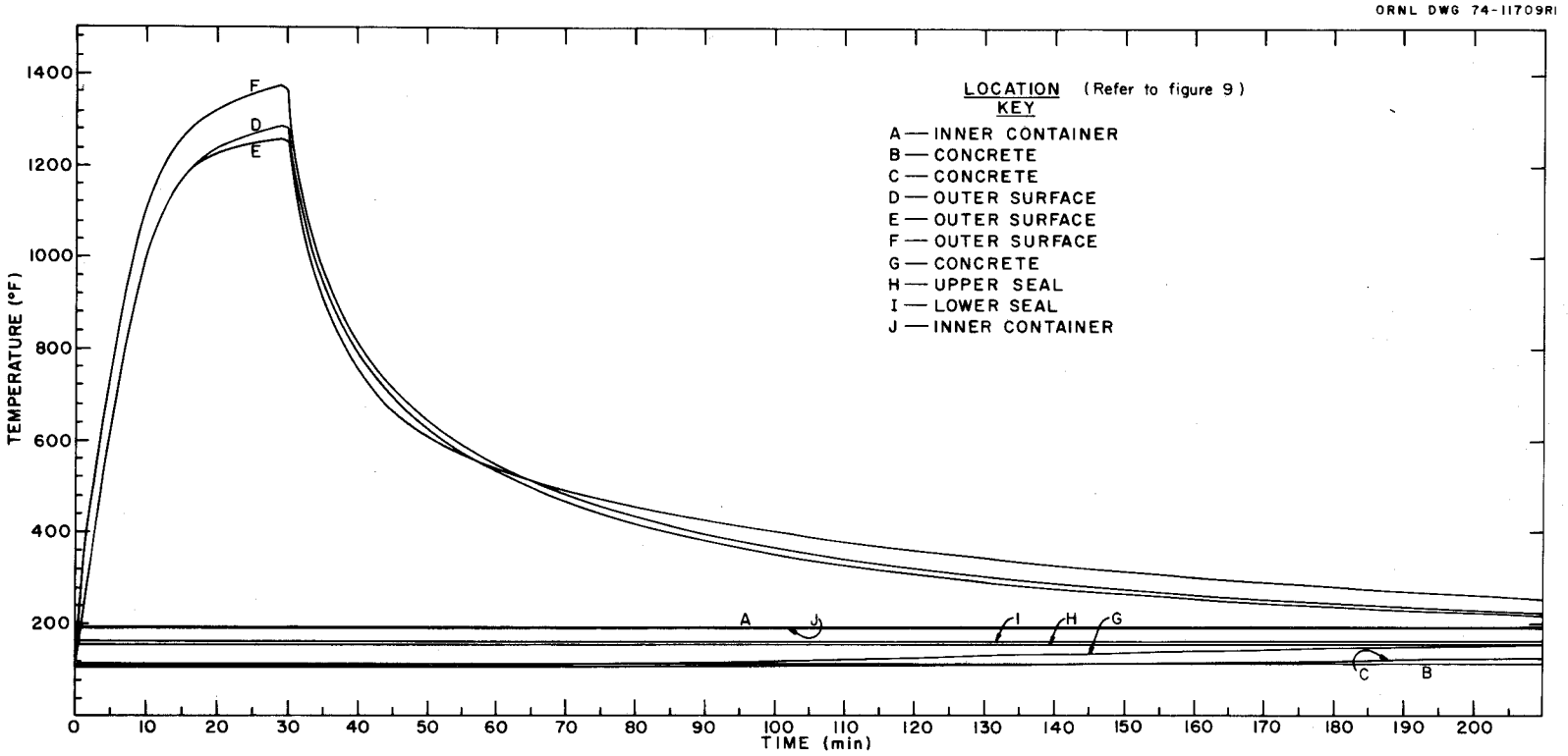

Fig. 4.4 Temperature distribution in the TRU Californium Shipping Container during and after the thermal portion of the hypothetical accident.

5.1 Special-Form Shipments

The welded encapsulation provides primary containment for all special-form shipments (see Figs. 5.1 - 5.3) for examples of special-form encapsulations). If the material is doubly encapsulated, the outer welded capsule provides secondary containment. Visual inspection of these lines of containment are performed on a routine basis, and the welds are radiographed. The cask seals form an additional line of containment. The cask is equipped with gasketed closures which are leak-tight during normal transport. An accident might result in a rupture of the seals, but the contents in their primary containers would remain in the cavity.

5.1.1 *Special-form containers*

The ORNL Operations Division is authorized by Laboratory management to certify that a material conforms to the special-form requirements of Appendix D of 10 CFR Part 71.[18] The tests prescribed have been performed on a number of capsule designs. When a capsule is similar in design to a capsule previously tested (i.e., in relation to size, mass, wall thicknesses, materials, weld, etc.), the design is certified as passing the special-form requirements based on previous test results. If this similarity does not exist, it is required that a prototype be tested as prescribed.

5.2 Other Shipments

When materials to be shipped do not fulfill the requirements for a special-form shipment, they are enclosed within a Specification 2R container which provides primary containment. A typical example of an ORNL 2R container is shown in Fig. 5.4. Specification 2R containers are designed to be leaktight to the extent that water or solids will not leak from or into the container at the anticipated pressure and temperature. The cask seals form the secondary line of containment.

5.2.1 *Specification 2R containers*

Specification 2R[19] inner containers may be used with the TRU Californium Shipping Container. These will be made from pipe and pipe fittings or tube and tube fittings. Wall thicknesses and closures will be made in accordance with Specification 2R.

Fabrication will be in accordance with ORNL Quality Assurance Procedures. Applicable approved ORNL procedures will be used for welding. All welds will be appropriately inspected in accordance with approved ORNL weld inspection procedures.

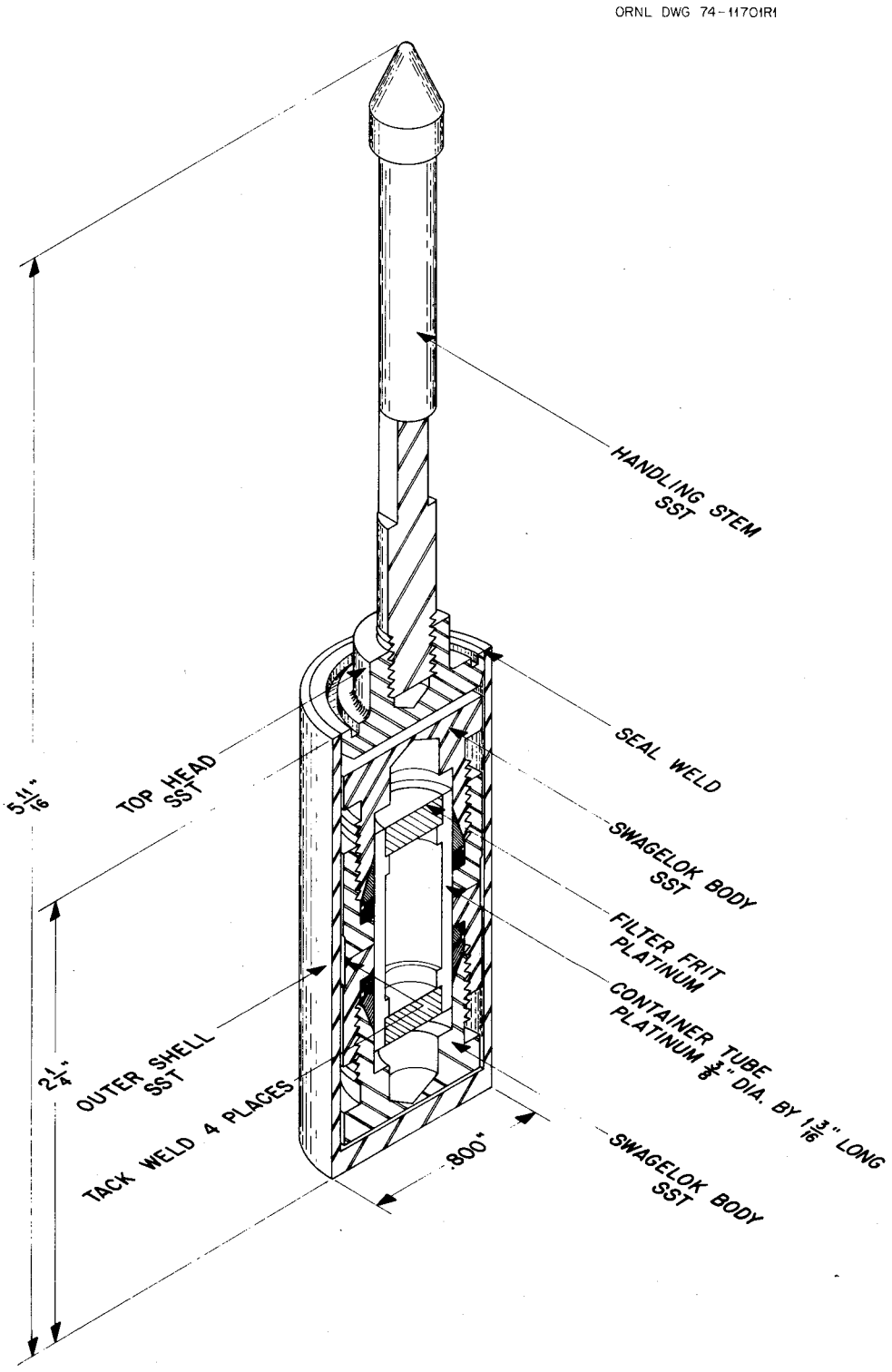

Fig. 5.1 Assembly for TRU shipment of ^{252}Cf (for details see Drawing M-12175-CP-335-D) — a typical special form inner container.

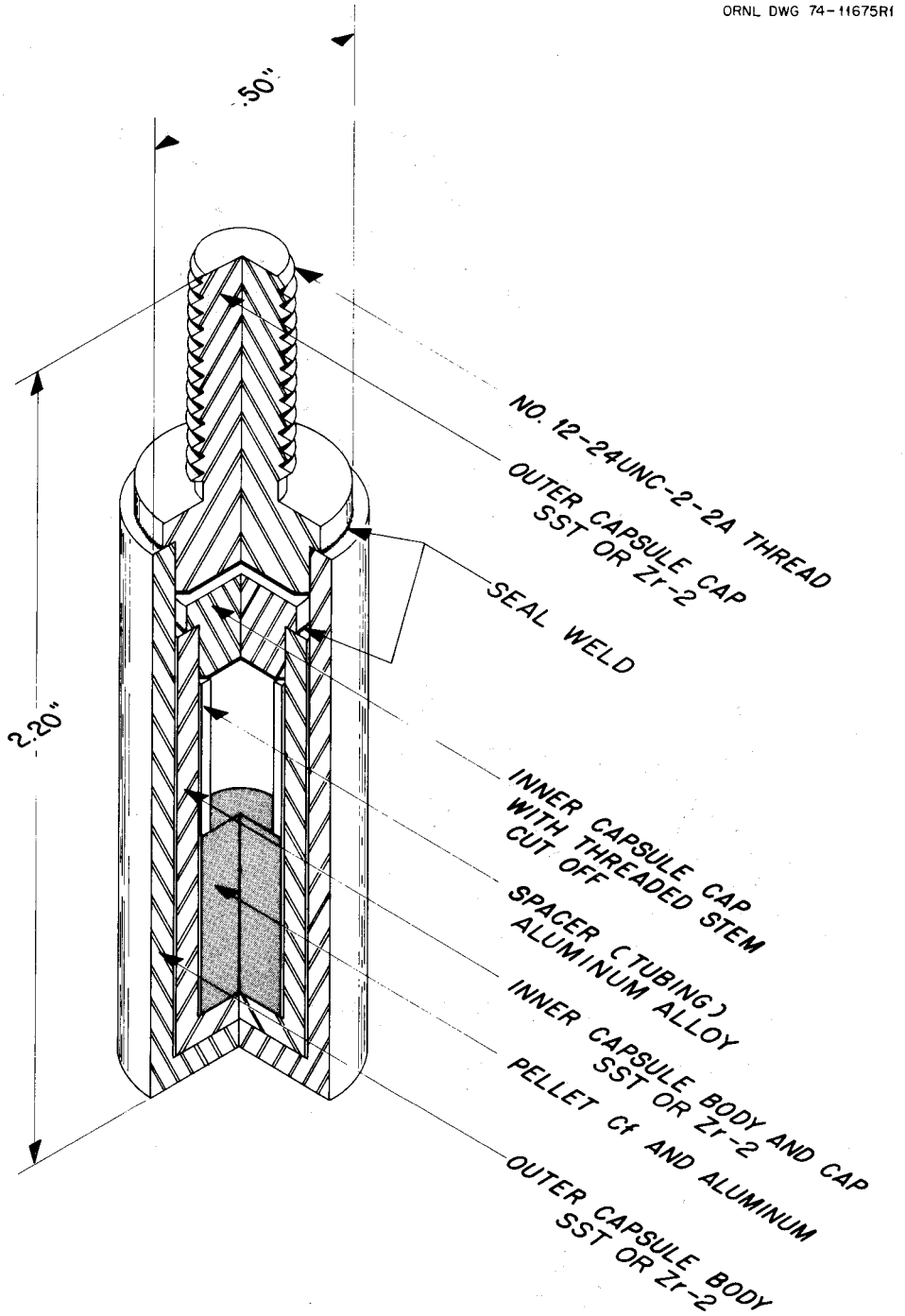

STANDARD NEUTRON SOURCE CONTAINER
(FOR DETAILS SEE DRAWING M-12175-CP-636-D)

Fig. 5.2 Standard neutron source container (for details see Drawing M-12175-CP-636-D) — a typical special form inner container.

ORNL DWG 74-11668R2

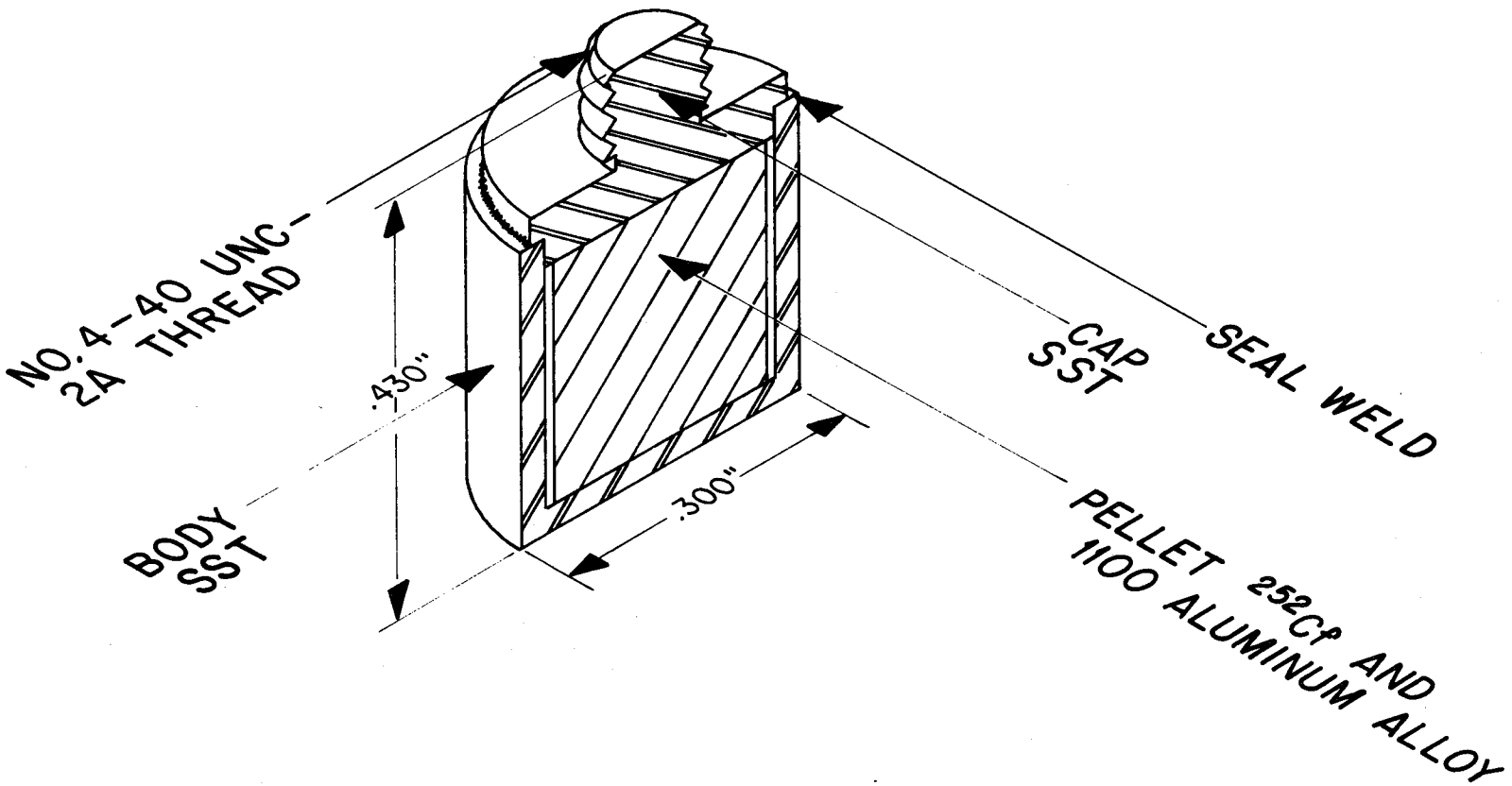

SPECIAL NEUTRON SOURCE CAPSULE - NS-65
(FOR DETAILS SEE DRAW M-12175-CP-637-D)

Fig. 5.3 Special neutron source capsule - NS-65 (for details see Drawing M-12175-CP-637-D) — a typical special-form inner container.

5.3 Containment Requirements for Normal Conditions of Transport

The test sequence for containers of special-form materials is more severe than for those with normal conditions of transport. The pressure increases that are encountered will be less than those experienced in the thermal test for special-form materials. No loss of primary coolant (air) is expected.

The 2R containers are designed for pressures and temperatures in excess of those encountered in normal transport. No release of radioactive material, loss of coolant (air), or contamination of coolant should occur.

5.4 Containment Requirements During the Hypothetical Accident

The test series for special-form containers demonstrates that special-form encapsulation will not fail or leak contents as the result of the free falls. The thermal test temperatures of special-form containers exceed those experienced by the inner cavity contents during the hypothetical accident (see Sect. 4.3.3); hence no release will occur during the thermal exposure. The water immersion test for special form is identical to that specified in the hypothetical accident conditions.

The 2R containers are designed for pressures and temperatures in excess of those encountered in the hypothetical accident.

6. CRITICALITY

The analysis for the single container given below is adequate for an infinite array of similar containers because the concrete shielding assures essentially no interaction.

6.1 Evaluation of a Single Package

A study[20] has been made of the criticality of californium and other transuranium elements under conditions of optimum moderation and water reflection. Californium-251 had the smallest critical mass (10 g). The quantity of isotopes to be carried by this cask is limited to 3 g. Approval of the use of this cask for that quantity of fissile material has been granted by Nuclear Safety Review 750 (see Sect. 9.2).

Since the quantites of fissionable isotopes carried is below all minimum critical masses for these isotopes under optimum moderation and reflection, and since the cask effectively isolates the contents from neutron interaction with packages of similar design, unlimited numbers could be stacked together without creating a criticality problem. Thus the package is adequate for Fissile Class I shipments.

ORNL Dwg 74-11718
R-1

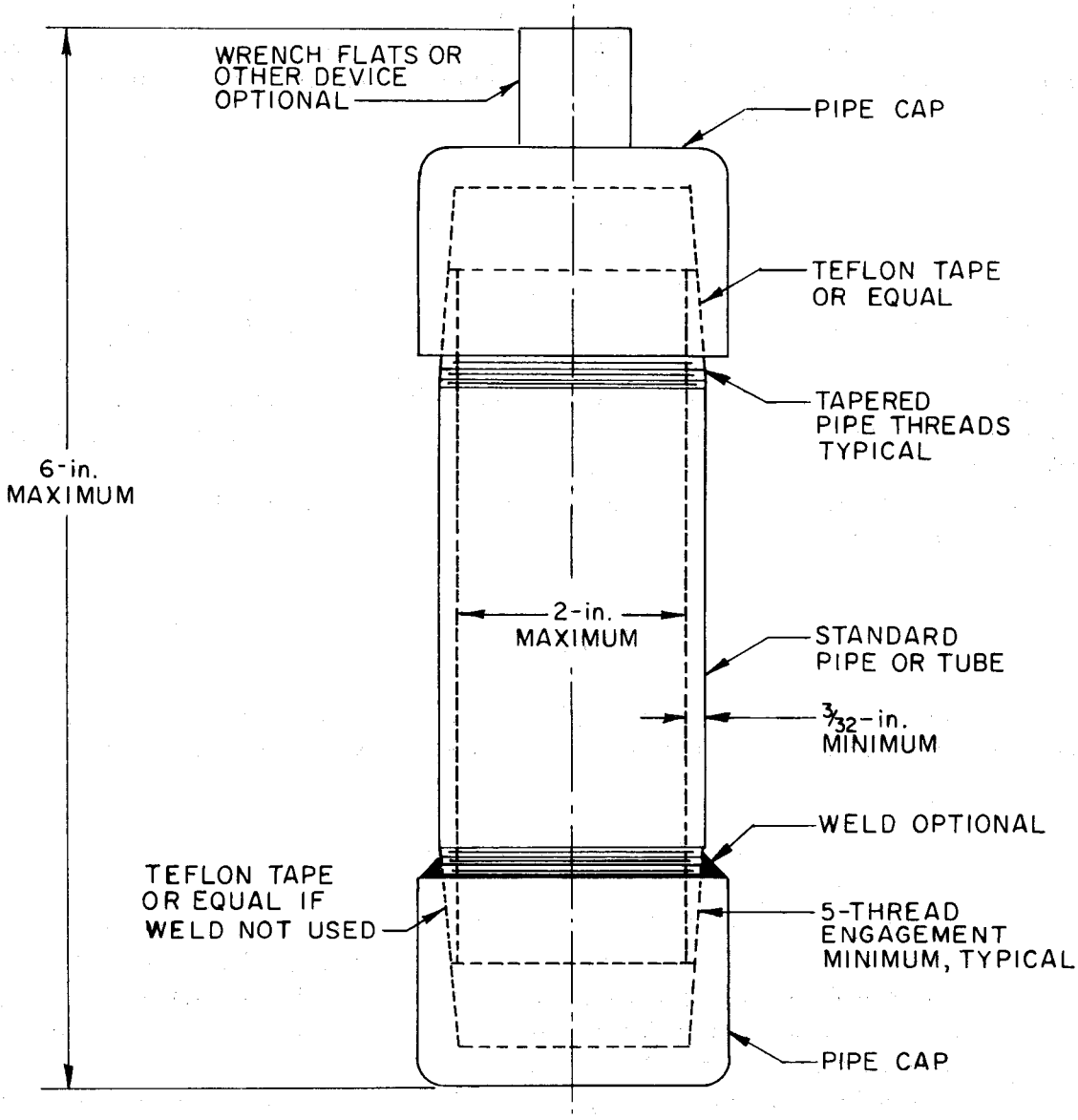

Fig. 5.4 Typical pipe-element Specification 2R inner container.

7. SHIELDING EVALUATION

7.1 Discussion and Results

The TRU Californium Shipping Container is designed with its cavity surrounded by a 1-in. thickness of stainless steel and a 1/2-in.-thick outer spherical shell. The shielding cavity between the two is filled with limonite concrete to a nominal thickness of 30 in. The shielding effectiveness has been checked with transuranium sources and found to be adequate. In addition, the cask contents will be limited to the source that will not exceed the allowable radiation dose limits of the DOT regulations.[6]

The shielding effectiveness will not be reduced by the hypothetical 30-ft drop accident, concrete fractures in an intergranular manner providing a labyrinthine pathway for radiation, allowing no possibility of radiation streaming.

8. QUALITY ASSURANCE

8.1 Fabrication, Inspection, and Acceptance Tests

The fabrication of this container was performed in the shops of the Oak Ridge National Laboratory in accordance with normal shop fabrication procedures. Material was specified on the original drawings as "304L SST." Material was withdrawn from Bill of Materials Stores stock. The casks were inspected by ORNL Shop Inspection Department personnel for conformance to the drawings, quality of workmanship, and compliance with welding requirements when fabricated. In the opinion of the inspecting personnel, the weldments were made in accordance with the drawings and specifications. This is further supported by the fact that the casks have operated for 6 years without failures or loss of effectiveness. The routine operating inspection procedures specify periodic weld inspections to verify weld integrity.

8.2 Operating Procedures and Routine Inspection

The Transuranium Processing Plant, Chemical Technology Division, has established operating and routine inspection procedures and standard checklists to ensure that all shipments are safe and that they comply with DOE regulations as well as all ORNL procedures and regulations. A copy of typical procedures and checklists are presented in Sect. 9.4.

8.3 Periodic Maintenance and Inspection

Inspections are required prior to each shipment or biennially (see Sect. 9.4). Maintenance will be required only when routine inspections indicate damage.

9. APPENDIXES

9.1 Appendix A — Drawings associated with the TRU Californium Shipping Container

Title	Drawing No.	Page
Shipping Carrier Assembly	M-11230-EN-001-D	52
Shipping Carrier Weldment	M-11230-EN-002-D	53
Shipping Carrier - Detail Sheet No. 1	M-11230-EN-003-D	54
Shipping Carrier - Detail Sheet No. 2	M-11230-EN-004-D	55
Shipping Carrier - Detail Sheet No. 3	M-11230-EN-005-D	56
Shipping Carrier - Detail Sheet No. 4	M-11230-EN-006-D	57
Shipping Carrier - Detail Sheet No. 5	M-11230-EN-007-D	58
Shipping Carrier - Detail Sheet No. 6	M-11230-EN-008-D	59
Shipping Carrier Skid Assembly and Details	M-11230-EN-009-D	60
Shipping Carrier Skid Assembly - Detail Sheet 7	M-11230-EN-010-D	61
Shipping Carrier Skid Assembly - Detail Sheet 8	M-11230-EN-011-D	62
Shipping Carrier Trailer Modification Assembly	M-11230-EN-012-D	63
Shipping Carrier Trailer Modification Trailer Frame Modification Details	M-11230-EN-013-D	64
Shipping Carrier Trailer Modification Details	M-11230-EN-014-D	65
Shipping Carrier Trailer Modification Rear Tie-Down Bracket Details	M-11230-EN-015-D	66
Shipping Carrier Trailer Modification Lighting Housing Details	M-11230-EN-016-D	67
Modified Plug to Handle Multiple Items	M-11230-EN-017-D	68
TRU Ten-Ton Californium Shipping Container	M-12166-CD-019-D	69
Existing Trailer Frame Details	S-11147-EF-006-D	70

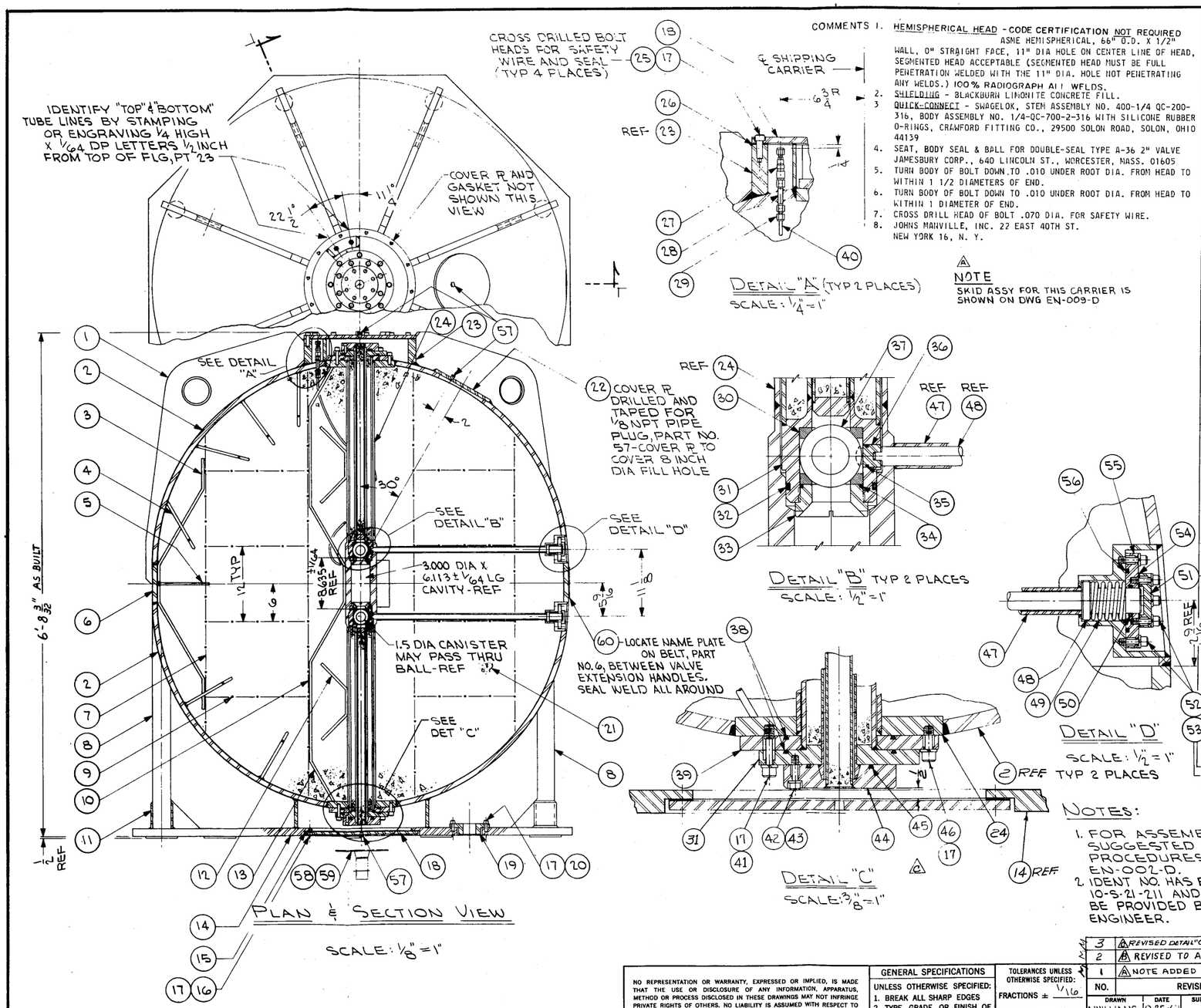

COMMENTS

1. HEMISPHERICAL HEAD - CODE CERTIFICATION NOT REQUIRED
   ASME HEMISPHERICAL, 66" O.D. X 1/2" WALL, 0" STRAIGHT FACE, 11" DIA HOLE ON CENTER LINE OF HEAD, SEGMENTED HEAD ACCEPTABLE (SEGMENTED HEAD MUST BE FULL PENETRATION WELDED WITH THE 11" DIA. HOLE NOT PENETRATING ANY WELDS.) 100% RADIOGRAPH ALL WELDS.
2. SHIELDING - BLACKBURN LIMONITE CONCRETE FILL.
3. QUICK-CONNECT - SWAGELOK, STEM ASSEMBLY NO. 400-1/4 QC-200-316, BODY ASSEMBLY NO. 1/4-QC-700-2-316 WITH SILICONE RUBBER O-RINGS, CRAWFORD FITTING CO., 29500 SOLON ROAD, SOLON, OHIO 44139
4. SEAT, BODY SEAL & BALL FOR DOUBLE-SEAL TYPE A-36 2" VALVE JAMESBURY CORP., 640 LINCOLN ST., WORCESTER, MASS. 01605
5. TURN BODY OF BOLT DOWN TO .010 UNDER ROOT DIA. FROM HEAD TO WITHIN 1 1/2 DIAMETERS OF END.
6. TURN BODY OF BOLT DOWN TO .010 UNDER ROOT DIA. FROM HEAD TO WITHIN 1 DIAMETER OF END.
7. CROSS DRILL HEAD OF BOLT .070 DIA. FOR SAFETY WIRE.
8. JOHNS MANVILLE, INC. 22 EAST 40TH ST. NEW YORK 16, N. Y.

NOTE

SKID ASSY FOR THIS CARRIER IS SHOWN ON DWG EN-009-D

NOTES:

1. FOR ASSEMBLY AND SUGGESTED WELDING PROCEDURES SEE DWG EN-002-D.
2. IDENT NO. HAS BEEN ASSIGNED 10-S-21-211 AND IDENT TAG WILL BE PROVIDED BY PROGRAM ENGINEER.

PARTS LIST

PART	DWG NO.	REQD	DESCRIPTION	STOCK SIZE	MATERIAL
1	EN-003-D	8	RIB		ANY 300 SST
2 1	THIS DWG	2	HEAD, HEMISPHERICAL, (MODIFIED)		ANY 300 SST
3	EN-003-D	16	REINF BAR "A"		STEEL
4	EN-003-D	48	REINF. BAR "D"		STEEL
5	EN-003-D	16	REINF. BAR "C"		STEEL
6	THIS DWG	1	BELT, 66" O.D. X 65" I.D. X 1/2" THK X 6" WIDE		ANY 300 SST
7	THIS DWG	1	MESH, REINF, CONC, 4" X 4" X 10 GA. WIRE 50" DIA X 45" HIGH (45 X 157)		STEEL
8	EN-007-D	8	STRUT		ANY 300 SST
9	THIS DWG	4	MESH, REINF, CONC, 4" X 4" X 10 GA. WIRE 50" O.D. X 17" I.D		STEEL
10	THIS DWG	1	MESH, REINF, CONC, 4" X 4" X 10 GA. WIRE 17" DIA X 67" HIGH (67 X 54)		STEEL
11	THIS DWG	8	PIPE, 3" NPS SCH 40 X 4" LG		ANY 300 SST
12	EN-003-D	8	REINF BAR "D"		ANY 300 SST
13	EN-003-D	8	REINF BAR "E"		ANY 300 SST
14	EN-004-D	1	BASE PLATE		ANY 300 SST
15 8	EN-004-D	1	GASKET		JM 60
16	THIS DWG	12	SCREW, SOC HD CAP 1/2" -13 NC-2 X 1" LONG		ANY 300 SST
17	THIS DWG	64	WASHER, SPRING LOCK, FOR 1/2" DIA SCREW		ANY 300 SST
18	EN-004-D	2	COVER PLATE		ANY 300 SST
19	EN-004-D	2	BUSHING		ANY 300 SST
20	THIS DWG	8	BOLT, SOC HD CAP 1/2" - 13 NC - 2 X 1 1/2" LONG		ANY 300 SST
21 2	THIS DWG	AS REQD.	SHIELDING		CONCRETE
22	THIS DWG	1	COVER PLATE, 10" DIA X 1/2" THK		ANY 300 SST
23	EN-005-D	1	UPPER RING		ANY 300 SST
24	EN-005-D	1	ACCESS TUBE		ANY 300 SST
25 6,7	THIS DWG	12	SCREW, SOC HD CAP 1/2" - 13 NC - 2 X 1 1/2" LONG		ANY 300 SST
26 8	EN-004-D	1	GASKET		JM-60
27 3	THIS DWG	2	QUICK-CONNECT, SINGLE END SHUT-OFF 1/4" TUBE TO 1/8" FEMALE PIPE		316 SST
28	THIS DWG	2	NIPPLE, 1/8" NPS SCH 40 X 2" LONG		ANY 300 SST
29	THIS DWG	2	CONNECTOR, FEMALE, 1/4" TUBE TO 1/8" PIPE		ANY 300 SST
30 4	THIS DWG	4	SEAT		SILICONE RUBBER
31	EN-006-D	2	VALVE BODY		SEE DETAIL
32	THIS DWG	2	O-RING, 3 1/4" I.D. X 3 5/8" O.D. X 3/16"		SILICONE RUBBER
33	EN-006-D	2	PLUG		ANY 300 SST
34 4	THIS DWG	2	BODY SEAL		SILICONE RUBBER
35	THIS DWG	2	O-RING, 3/4" I.D X 7/8" O.D. X 1/16"		SILICONE RUBBER
36	EN-006-D	2	STEM		ANY 300 SST
37 4	THIS DWG	2	BALL		ANY 300 SST
38	THIS DWG	4	O-RING, 5 1/2" I.D. X 5 7/8" O.D. X 3/16"		SILICONE RUBBER
39	EN-007-D	2	ADJUSTMENT PLATE		ANY 300 SST
40	EN-007-D	1	TUBE, 1/4" O.D. X .065" WALL 144" LONG		ANY 300 SST
41 5	THIS DWG	16	BOLT, CAPTIVE, SOC HD CAP 1/2"-13 NC-2 X 2 1/4" LONG		ANY 300 SST
42 5	THIS DWG	16	BOLT, CAPTIVE, SOC HD CAP 3/8"-16 NC-2 X 1 3/8" LONG		ANY 300 SST
43	THIS DWG	16	WASHER, SPRING LOCK, FOR 3/8" DIA BOLT		ANY 300 SST
44	EN-007-D	2	INNER PLUG		SEE DETAIL
45	EN-007-D	2	O-RING 3 1/8" I.D. X 3 1/2" O.D. X 3/16"		SILICONE RUBBER
46 6	THIS DWG	16	BOLT, CAPTIVE, SOC HD. CAP 1/2"-13 NC-2 X 1 1/2" LG		ANY 300 SST
47	EN-008-D	2	HOUSING		ANY 300 SST
48	EN-008-D	2	EXTENSION BAR		ANY 300 SST
49	EN-003-D	2	SPRING		SPRING STL
50	THIS DWG	2	O-RING, 1" I.D. X 1 1/4" O.D. X 1/8"		SILICONE RUBBER
51	EN-006-D	2	END PLATE		ANY 300 SST
52 5,7	THIS DWG	8	BOLT, CAPTIVE, SOC HD CAP 1/4"-20 NC-2 X 7/8" LONG		ANY 300 SST
53	THIS DWG	8	WASHER, SPRING, LOCK, FOR 1/4" DIA BOLT		ANY 300 SST
54	THIS DWG	2	GASKET, 2 1/8" O.D. X 1 1/8" I.D. X 1/16" THK. WITH (4) 5/16" DIA HOLES EQ. SPACED ON 1 5/8" DIA BC		JM-60
55	EN-006-D	2	COVER PLATE		ANY 300 SST
56	EN-006-D	2	O-RING 2 1/8" I.D. X 2 1/2" O.D. X 3/16"		SILICONE RUBBER
57	EN-003-D	3	PIPE PLUG 1/8" NPT		ANY 300 SST
58	EN-008-D	1	ADAPTER		ANY 300 SST
59	THIS DWG	1	O-RING, 1 3/4" ID X 2 1/8" OD X 3/16"		SILICONE RUBBER
60	EN-008-D	1	NAME PLATE		ANY 300 SST

REFERENCE DRAWINGS	NUMBER
DETAIL SHEET NO. 6	EN-008-D
" " NO. 5	EN-007-D
" " NO. 4	EN-006-D
" " NO. 3	EN-005-D
" " NO. 2	EN-004-D
" " NO. 1	EN-003-D
WELDMENT	EN-002-D

NO REPRESENTATION OR WARRANTY, EXPRESSED OR IMPLIED, IS MADE THAT THE USE OR DISCLOSURE OF ANY INFORMATION, APPARATUS, METHOD OR PROCESS DISCLOSED IN THESE DRAWINGS MAY NOT INFRINGE PRIVATE RIGHTS OF OTHERS. NO LIABILITY IS ASSUMED WITH RESPECT TO THE USE OF, OR FOR DAMAGES RESULTING FROM THE USE OF, ANY INFORMATION, APPARATUS, METHOD OR PROCESS DISCLOSED IN THESE DRAWINGS. THE DRAWINGS ARE BEING MADE AVAILABLE FOR INFORMATION TO BIDDER AND ARE NOT TO BE USED FOR OTHER PURPOSES, AND ARE TO BE RETURNED UPON REQUEST OF THE FORWARDING CONTRACTOR.

GENERAL SPECIFICATIONS

UNLESS OTHERWISE SPECIFIED:
1. BREAK ALL SHARP EDGES
2. TYPE, GRADE, OR FINISH OF MATERIAL MAY BE CHOSEN BY FABRICATOR.
3. MACHINED SURFACE FINISH SHALL NOT EXCEED: (ASA B46.1—1962) 125 √

TOLERANCES UNLESS OTHERWISE SPECIFIED:
FRACTIONS ± 1/16
DECIMALS ± —
ANGLES ± 1°
SCALE: NOTED

NO.	REVISIONS	DATE	APPD	APPD
3	REVISED DETAIL "C", ADDED 1/2 DIM.	11/11/67	SOL	7920
2	REVISED TO AS BUILT	6-11-65	1338	HWD
1	NOTE ADDED	RGF 4/16/64	1338	HWD

DRAWN	DATE	SUBMITTED	DATE	APPROVED	DATE
A. WILLIAMS	9-25-61				
DESIGNED	DATE	APPROVED	DATE	APPROVED	DATE
S.O. Lewis	9-15-67				
CHECKED	DATE	APPROVED	DATE	APPROVED	DATE
S.O. Lewis	9-27-61				

OAK RIDGE NATIONAL LABORATORY
OPERATED BY
UNION CARBIDE CORPORATION
OAK RIDGE, TENNESSEE

TRU SHIPPING CARRIER — BLDG. NO. 7920

SHIPPING CARRIER ASSEMBLY

SUBMITTED: J. L. Gillespie — ACCEPTED: M. D. Cook — APPROVED: H. J. Duggan

M 11230 EN 001 D REV. 3

PARTS LIST					
PART	DWG NO.	REQD	DESCRIPTION	STOCK SIZE	MATERIAL

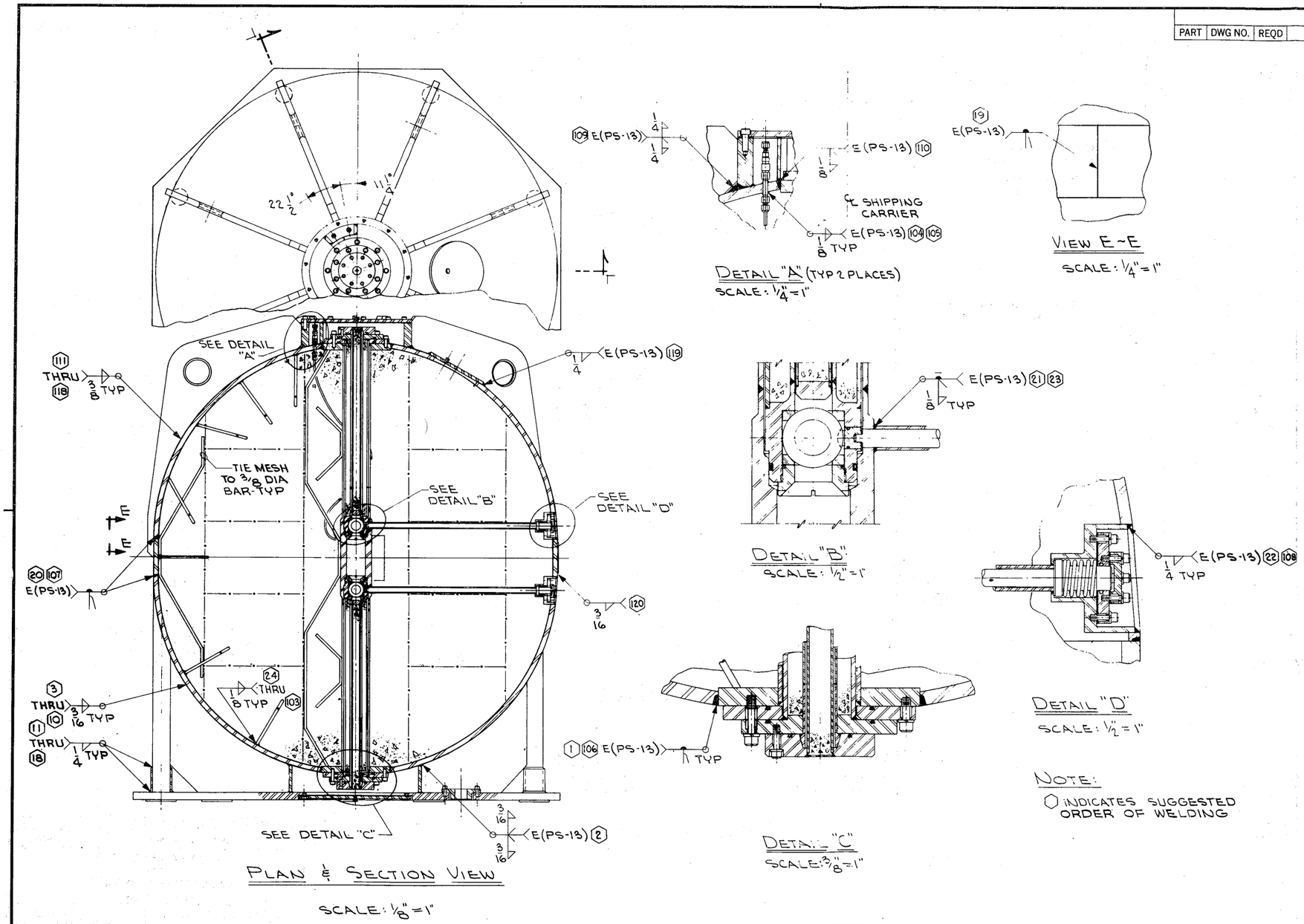

NOTE:
⬡ INDICATES SUGGESTED ORDER OF WELDING

NO REPRESENTATION OR WARRANTY, EXPRESSED OR IMPLIED, IS MADE THAT THE USE OR DISCLOSURE OF ANY INFORMATION, APPARATUS, METHOD OR PROCESS DISCLOSED IN THESE DRAWINGS MAY NOT INFRINGE PRIVATE RIGHTS OF OTHERS. NO LIABILITY IS ASSUMED WITH RESPECT TO THE USE OF, OR FOR DAMAGES RESULTING FROM THE USE OF, ANY INFORMATION, APPARATUS, METHOD OR PROCESS DISCLOSED IN THESE DRAWINGS. THE DRAWINGS ARE BEING MADE AVAILABLE FOR INFORMATION TO BIDDER AND ARE NOT TO BE USED FOR OTHER PURPOSES, AND ARE TO BE RETURNED UPON REQUEST OF THE FORWARDING CONTRACTOR.

GENERAL SPECIFICATIONS
UNLESS OTHERWISE SPECIFIED:
1. BREAK ALL SHARP EDGES
2. TYPE, GRADE, OR FINISH OF MATERIAL MAY BE CHOSEN BY FABRICATOR.
3. MACHINED SURFACE FINISH SHALL NOT EXCEED: (ASA B46.1—1962) —√

TOLERANCES UNLESS OTHERWISE SPECIFIED:
FRACTIONS ± —
DECIMALS ± —
ANGLES ± —
SCALE: NOTED

NO.	REVISIONS	DATE	APPD	APPD

DRAWN	A.W. Jones	DATE 5-20-67	SUBMITTED	DATE	APPROVED	DATE	
DESIGNED	S. Q. Lewis	DATE 9-18-67	APPROVED	DATE	APPROVED	DATE	
CHECKED	S. Q. Lewis	DATE 10-2-67	APPROVED	DATE	APPROVED	DATE	

SHIPPING CARRIER ASSY — NUMBER EN-001-D
REFERENCE DRAWINGS

OAK RIDGE NATIONAL LABORATORY
OPERATED BY
UNION CARBIDE CORPORATION
OAK RIDGE, TENNESSEE

TRU SHIPPING CARRIER — BLDG. NO. 7920

SHIPPING CARRIER WELDMENT

SUBMITTED G. L. Zi... 12-28-66 — ACCEPTED W. D. Burch — APPROVED H. G. Duggan

M	11230	EN	002	D	REV.

PARTS LIST					
PART	DWG NO.	REQD	DESCRIPTION	STOCK SIZE	MATERIAL

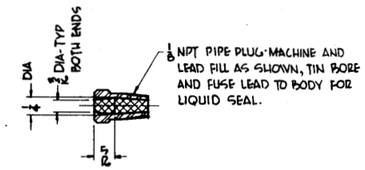

(57) 1/8 PIPE PLUG (MOD)

MAT'L: ANY 300 SST
8-REQ'D
SCALE: 1"=1"
TOLERANCE: ±1/64

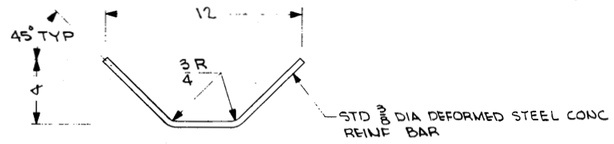

(12) REINF BAR "D"

8-REQD
SCALE: 1/4"=1"

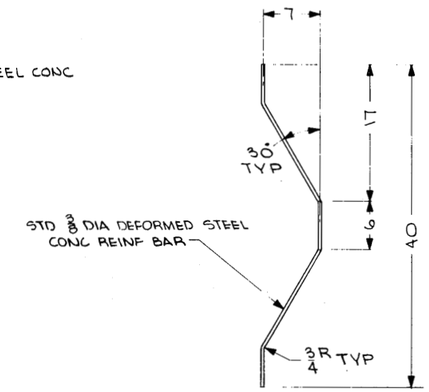

(3) REINF BAR "A"

16-REQD
SCALE: 1/8"=1"

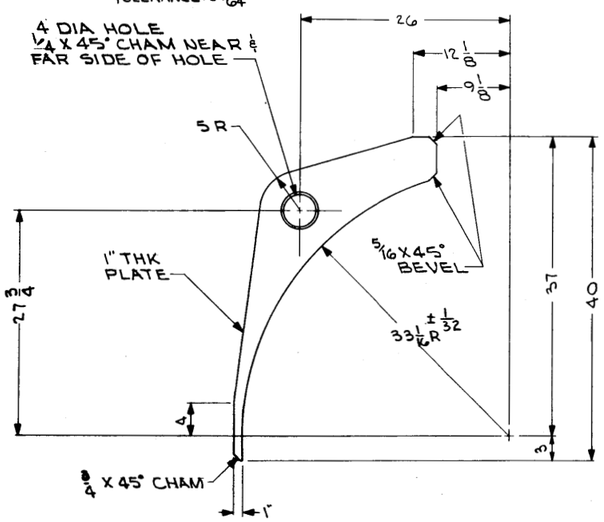

(1) RIB

MAT'L: ANY 300 SST
(8) REQ'D
SCALE: 1/8"=1"

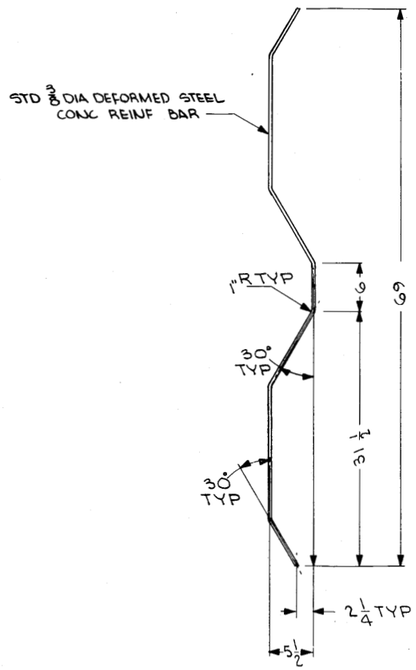

(13) REINF BAR "E"

8-REQD
SCALE: 1/8"=1"

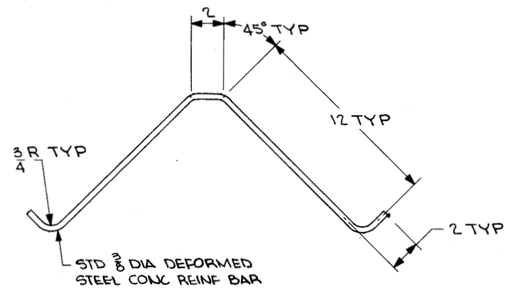

(4) REINF BAR "B"

48-REQD
SCALE: 1/4"=1"

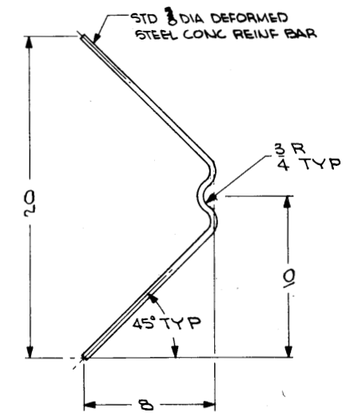

(5) REINF BAR "C"

16-REQD
SCALE: 1/4"=1"

SPRING DATA

WIRE SIZE	.125
OUTSIDE DIA	1.562
PITCH	.275
ACTIVE COILS	5
TOTAL COILS	7
FREE LENGTH	1.625
RATE	24 LB/IN. ±.5 LB
ENDS	SQUARE & GROUND

(49) SPRING

MAT'L: SPRING STL
(2) REQ'D

NOTE
TOLERANCE ON ALL REINF BARS TO BE ±1/8

NO REPRESENTATION OR WARRANTY, EXPRESSED OR IMPLIED, IS MADE THAT THE USE OR DISCLOSURE OF ANY INFORMATION, APPARATUS, METHOD OR PROCESS DISCLOSED IN THESE DRAWINGS MAY NOT INFRINGE PRIVATE RIGHTS OF OTHERS. NO LIABILITY IS ASSUMED WITH RESPECT TO THE USE OF, OR FOR DAMAGES RESULTING FROM THE USE OF, ANY INFORMATION, APPARATUS, METHOD OR PROCESS DISCLOSED IN THESE DRAWINGS. THE DRAWINGS ARE BEING MADE AVAILABLE FOR INFORMATION TO BIDDER AND ARE NOT TO BE USED FOR OTHER PURPOSES, AND ARE TO BE RETURNED UPON REQUEST OF THE FORWARDING CONTRACTOR.

GENERAL SPECIFICATIONS
UNLESS OTHERWISE SPECIFIED:
1. BREAK ALL SHARP EDGES
2. TYPE, GRADE, OR FINISH OF MATERIAL MAY BE CHOSEN BY FABRICATOR.
3. MACHINED SURFACE FINISH SHALL NOT EXCEED: 125√ (ASA B46.1–1962)

TOLERANCES UNLESS OTHERWISE SPECIFIED:
FRACTIONS ± 1/16
DECIMALS ± .005
ANGLES ± 0°30'
SCALE: NOTED

NO.	REVISIONS	DATE	APPD	APPD

DRAWN	DATE	SUBMITTED	DATE	APPROVED	DATE	APPROVED	DATE
A.WILLIAMS	6-5-67						
DESIGNED S.O.Lewis	DATE 6-1-67	APPROVED	DATE	APPROVED	DATE		
CHECKED S.O.Lewis	DATE 10-4-67	APPROVED	DATE	APPROVED	DATE		

SHIPPING CARRIER ASSY — EW-001-D
REFERENCE DRAWINGS — NUMBER

OAK RIDGE NATIONAL LABORATORY
OPERATED BY
UNION CARBIDE CORPORATION
OAK RIDGE, TENNESSEE

TRU SHIPPING CARRIER — BLDG. NO. 7920

SHIPPING CARRIER DETAIL SHEET NO. 1

SUBMITTED: T. D. Sullivan — ACCEPTED: W. D. Burch — APPROVED: H. D. Duggan

M 11230 EW 003 D

PARTS LIST					
PART	DWG NO.	REQD	DESCRIPTION	STOCK SIZE	MATERIAL

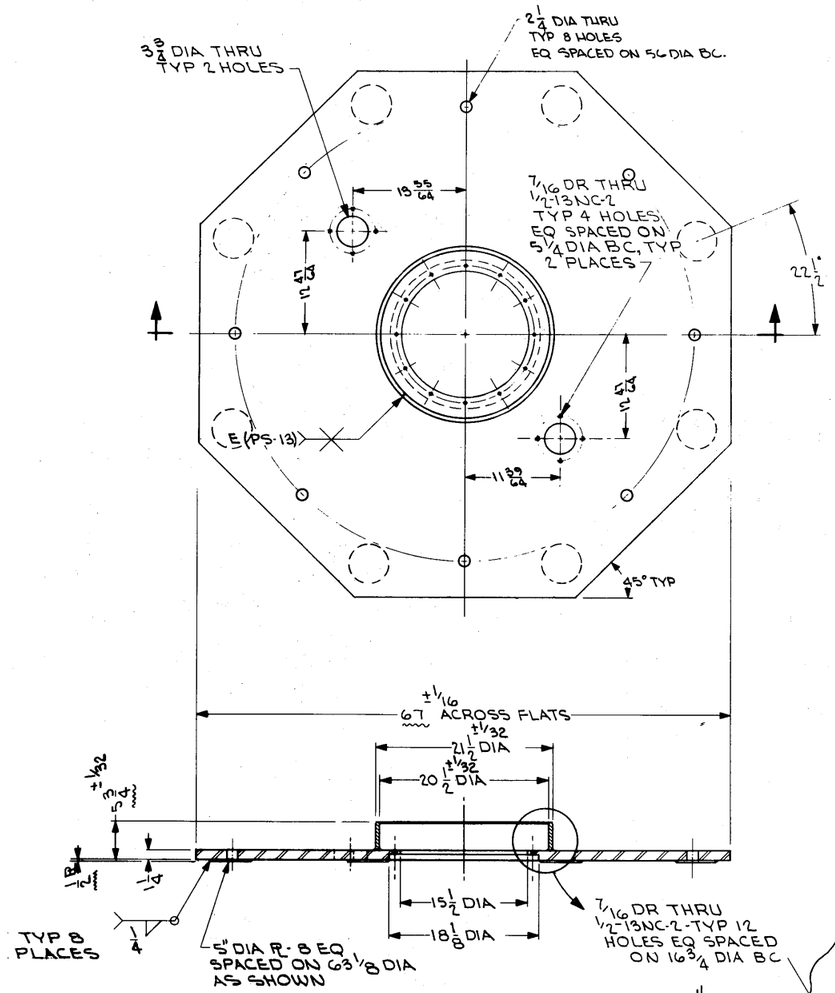

(14) BASE PLATE

MATL: ANY 300 SST
1-REQD
SCALE: 1/8" = 1"

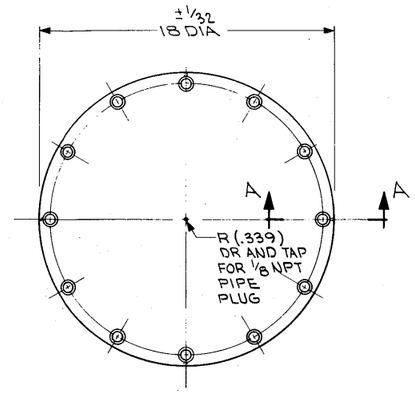

(18) COVER PLATE

MATL: ANY 300 SST
2-REQD
SCALE: 1/4" = 1"

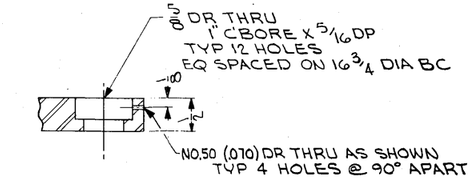

SECTION A-A

SCALE: 1" = 1"

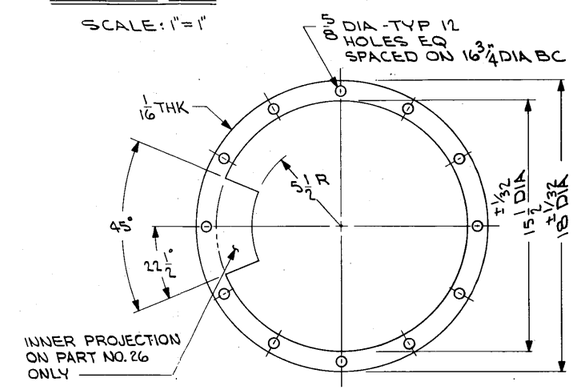

(15)(26) GASKET

MATL: JM-60 ASBESTOS
1-EACH REQD
SCALE: 1/4" = 1"

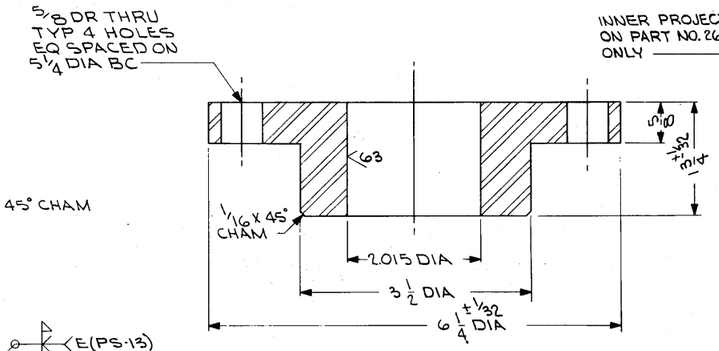

(19) BUSHING

MATL: ANY 300 SST
2-REQD
SCALE: 1" = 1"

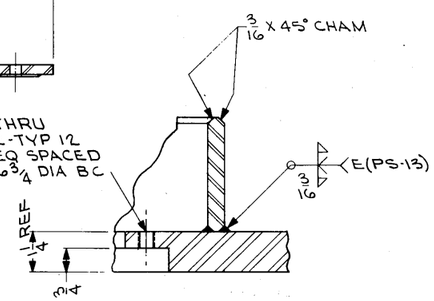

SCALE: 1/2" = 1"

NO REPRESENTATION OR WARRANTY, EXPRESSED OR IMPLIED, IS MADE THAT THE USE OR DISCLOSURE OF ANY INFORMATION, APPARATUS, METHOD OR PROCESS DISCLOSED IN THESE DRAWINGS MAY NOT INFRINGE PRIVATE RIGHTS OF OTHERS. NO LIABILITY IS ASSUMED WITH RESPECT TO THE USE OF, OR FOR DAMAGES RESULTING FROM THE USE OF, ANY INFORMATION, APPARATUS, METHOD OR PROCESS DISCLOSED IN THESE DRAWINGS. THE DRAWINGS ARE BEING MADE AVAILABLE FOR INFORMATION TO BIDDER AND ARE NOT TO BE USED FOR OTHER PURPOSES, AND ARE TO BE RETURNED UPON REQUEST OF THE FORWARDING CONTRACTOR.

GENERAL SPECIFICATIONS

UNLESS OTHERWISE SPECIFIED:
1. BREAK ALL SHARP EDGES
2. TYPE, GRADE, OR FINISH OF MATERIAL MAY BE CHOSEN BY FABRICATOR.
3. MACHINED SURFACE FINISH SHALL NOT EXCEED: 125 (ASA B46.1—1962)

TOLERANCES UNLESS OTHERWISE SPECIFIED:	
FRACTIONS	± 1/64
DECIMALS	± .005
ANGLES	± 0° 30'
SCALE:	NOTED

NO.	REVISIONS			DATE	APPD	APPD
DRAWN	DATE	SUBMITTED	DATE	APPROVED	DATE	
A. WILLIAMS	6-7-67					
DESIGNED	DATE	APPROVED	DATE	APPROVED	DATE	
S. O. Lewis	6-1-67					
CHECKED	DATE	APPROVED	DATE	APPROVED	DATE	
S. O. Lewis	10-5-67					

SHIPPING CARRIER ASSY	EN-001-D
REFERENCE DRAWINGS	NUMBER

OAK RIDGE NATIONAL LABORATORY
OPERATED BY
UNION CARBIDE CORPORATION
OAK RIDGE, TENNESSEE

TRU SHIPPING CARRIER — BLDG. NO. 7920

SHIPPING CARRIER
DETAIL SHEET NO. 2

SUBMITTED	ACCEPTED	APPROVED
J. L. Gallagher	W. D. Burch	H. E. Duggan

M	11230	EN	004	D	REV.

PARTS LIST					
PART	DWG NO.	REQD	DESCRIPTION	STOCK SIZE	MATERIAL

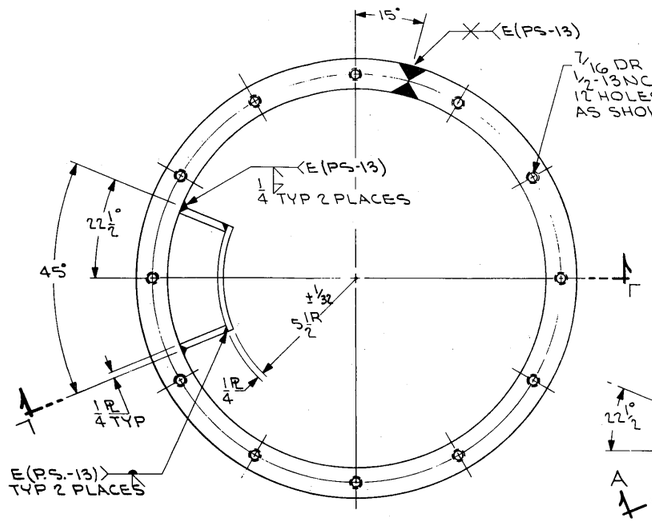

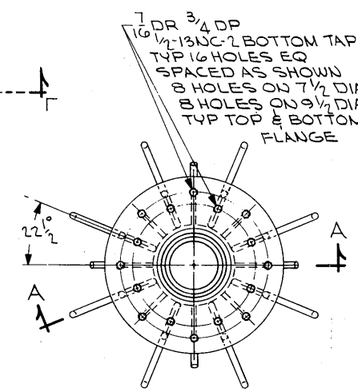

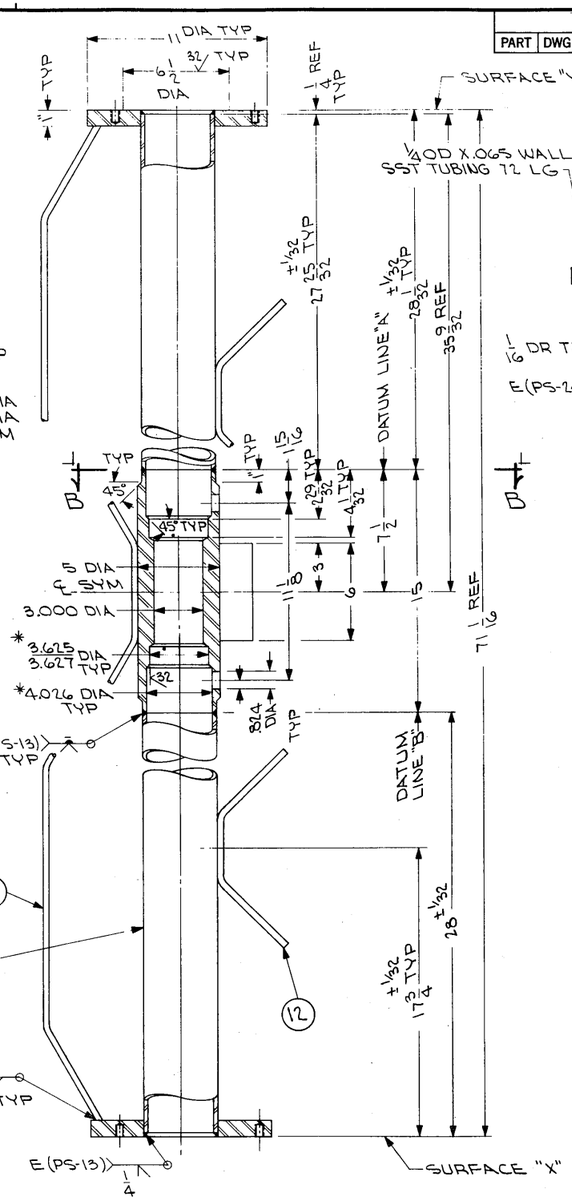

SECTION A-A
SCALE: 1/4" = 1"

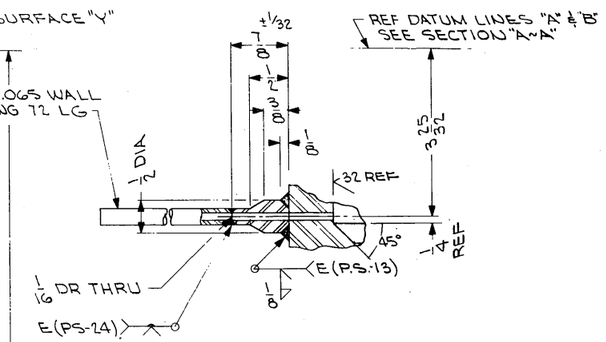

SECTION "C-C" (TYP 2 PLACES)
SCALE: 1" = 1"

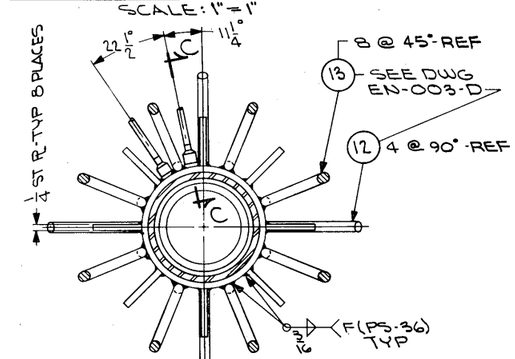

SECTION "B-B"
SCALE: 3/8" = 1"

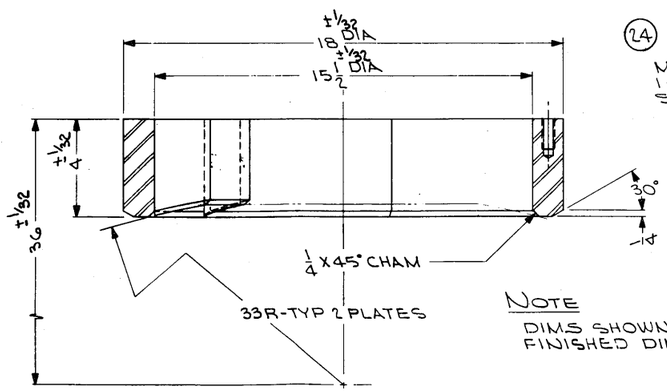

NOTE
DIMS SHOWN ARE
FINISHED DIMS

(23) UPPER RING
MATL: ANY 300 SST
1-REQD
SCALE: 3/8" = 1"

(24) ACCESS TUBE
MATL: ANY 300 SST
1-REQD
SCALE: 1/4" = 1"

NOTES:

1. DIAMETERS MARKED (*) TO BE CONCENTRIC WITH CENTER LINE WITHIN .002 FIR.
2. SURFACES "X" & "Y" SQUARE WITH CENTER LINE WITHIN .003 TOTAL.

REFERENCE DRAWINGS	NUMBER
DETAIL SHEET NO. 4	EN-006-D
DETAIL SHEET NO. 1	EN-003-D
SHIPPING CARRIER ASSY	EN-001-D

OAK RIDGE NATIONAL LABORATORY
OPERATED BY
UNION CARBIDE CORPORATION
OAK RIDGE, TENNESSEE

TRU SHIPPING CARRIER — BLDG. NO. 7920

SHIPPING CARRIER
DETAIL SHEET NO. 3

NO REPRESENTATION OR WARRANTY, EXPRESSED OR IMPLIED, IS MADE THAT THE USE OR DISCLOSURE OF ANY INFORMATION, APPARATUS, METHOD OR PROCESS DISCLOSED IN THESE DRAWINGS MAY NOT INFRINGE PRIVATE RIGHTS OF OTHERS. NO LIABILITY IS ASSUMED WITH RESPECT TO THE USE OF, OR FOR DAMAGES RESULTING FROM THE USE OF, ANY INFORMATION, APPARATUS, METHOD OR PROCESS DISCLOSED IN THESE DRAWINGS. THE DRAWINGS ARE BEING MADE AVAILABLE FOR INFORMATION TO BIDDER AND ARE NOT TO BE USED FOR OTHER PURPOSES, AND ARE TO BE RETURNED UPON REQUEST OF THE FORWARDING CONTRACTOR.

GENERAL SPECIFICATIONS
UNLESS OTHERWISE SPECIFIED:
1. BREAK ALL SHARP EDGES
2. TYPE, GRADE, OR FINISH OF MATERIAL MAY BE CHOSEN BY FABRICATOR.
3. MACHINED SURFACE FINISH SHALL NOT EXCEED: 63 √ (ASA B46.1–1962)

TOLERANCES UNLESS OTHERWISE SPECIFIED:
FRACTIONS ± 1/64
DECIMALS ± .005
ANGLES ± 0° 30'
SCALE: 3/8" = 1" & NOTED

NO.	REVISIONS	DATE	APPD	APPD

DRAWN	DATE	SUBMITTED	DATE	APPROVED	DATE
A. WILLIAMS	10-3-67				
DESIGNED	DATE	APPROVED	DATE	APPROVED	DATE
S. O. Lewis	6-5-67				
CHECKED	DATE	APPROVED	DATE	APPROVED	DATE
S. O. Lewis	10-6-67				

SUBMITTED: R. J. Sullivan — ACCEPTED: W. D. Burch — APPROVED: H. G. Duggan

M	11230	EN	005	D	REV.

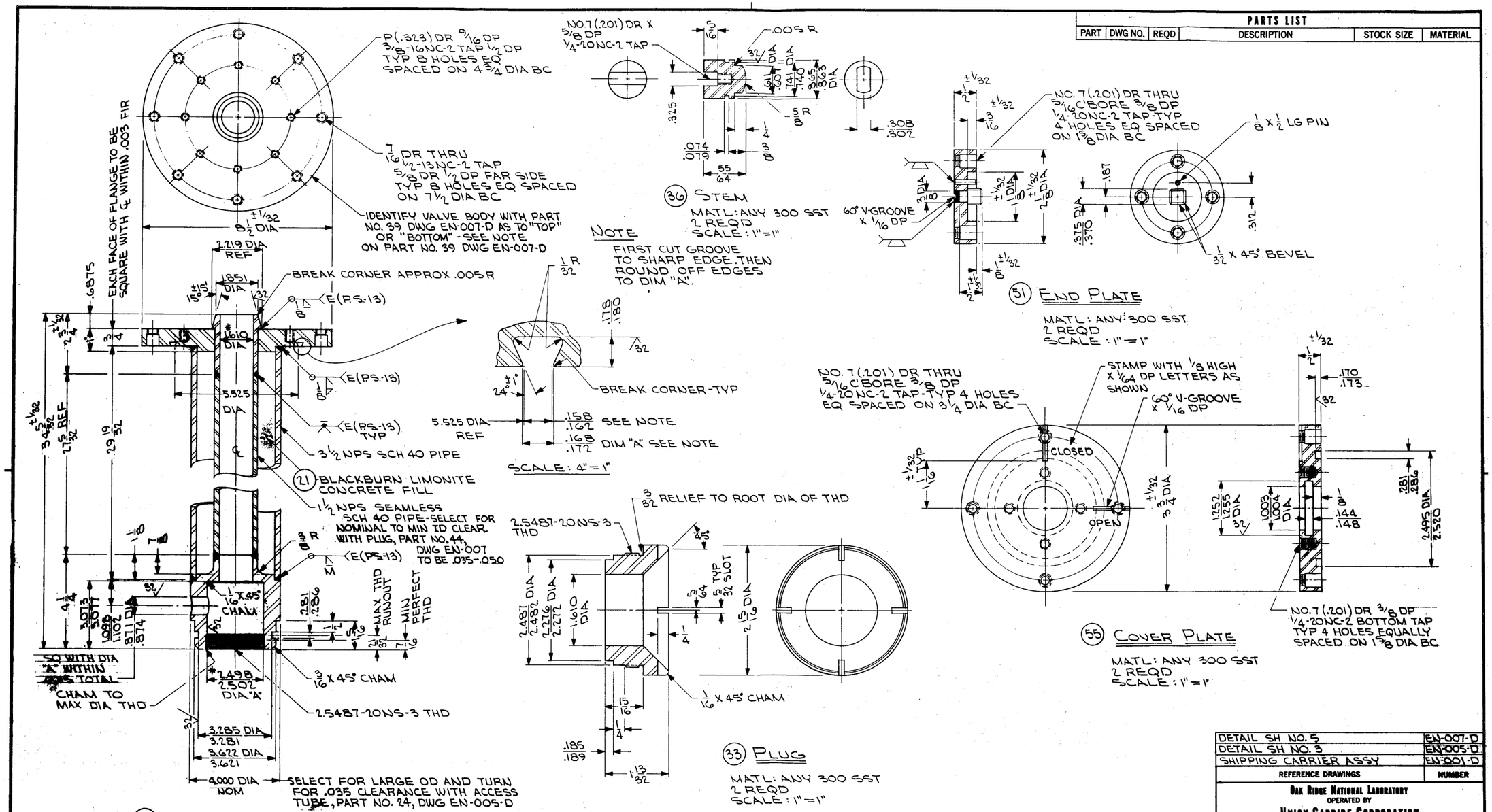

DETAIL SH NO. 5	EN-007-D
DETAIL SH NO. 3	EN-005-D
SHIPPING CARRIER ASSY	EN-001-D
REFERENCE DRAWINGS	NUMBER

OAK RIDGE NATIONAL LABORATORY
OPERATED BY
UNION CARBIDE CORPORATION
OAK RIDGE, TENNESSEE

TRU SHIPPING CARRIER — BLDG. NO. 7920

SHIPPING CARRIER DETAIL SHEET NO. 4

NO REPRESENTATION OR WARRANTY, EXPRESSED OR IMPLIED, IS MADE THAT THE USE OR DISCLOSURE OF ANY INFORMATION, APPARATUS, METHOD OR PROCESS DISCLOSED IN THESE DRAWINGS MAY NOT INFRINGE PRIVATE RIGHTS OF OTHERS. NO LIABILITY IS ASSUMED WITH RESPECT TO THE USE OF, OR FOR DAMAGES RESULTING FROM THE USE OF, ANY INFORMATION, APPARATUS, METHOD OR PROCESS DISCLOSED IN THESE DRAWINGS. THE DRAWINGS ARE BEING MADE AVAILABLE FOR INFORMATION TO BIDDER AND ARE NOT TO BE USED FOR OTHER PURPOSES, AND ARE TO BE RETURNED UPON REQUEST OF THE FORWARDING CONTRACTOR.

GENERAL SPECIFICATIONS
UNLESS OTHERWISE SPECIFIED:
1. BREAK ALL SHARP EDGES
2. TYPE, GRADE, OR FINISH OF MATERIAL MAY BE CHOSEN BY FABRICATOR.
3. MACHINED SURFACE FINISH SHALL NOT EXCEED: 63 (ASA B46.1—1962)

TOLERANCES UNLESS OTHERWISE SPECIFIED:
FRACTIONS ± 1/64
DECIMALS ± .005
ANGLES ± 0° 30'
SCALE: 1/2" = 1 1/2" NOTED

NO.	REVISIONS			DATE	APPD	APPD
DRAWN A. WILLIAMS	DATE 10-29-61	SUBMITTED	DATE	APPROVED	DATE	
DESIGNED S.Q. Lewis	DATE 6-1-67	APPROVED	DATE	APPROVED	DATE	
CHECKED S.Q. Lewis	DATE 10-3-67	APPROVED	DATE	APPROVED	DATE	

SUBMITTED G. J. Gillespie — ACCEPTED W. O. Cash — APPROVED H. B. Duggan

M 11230 EN 006 D REV. 1

PARTS LIST					
PART	DWG NO.	REQD	DESCRIPTION	STOCK SIZE	MATERIAL

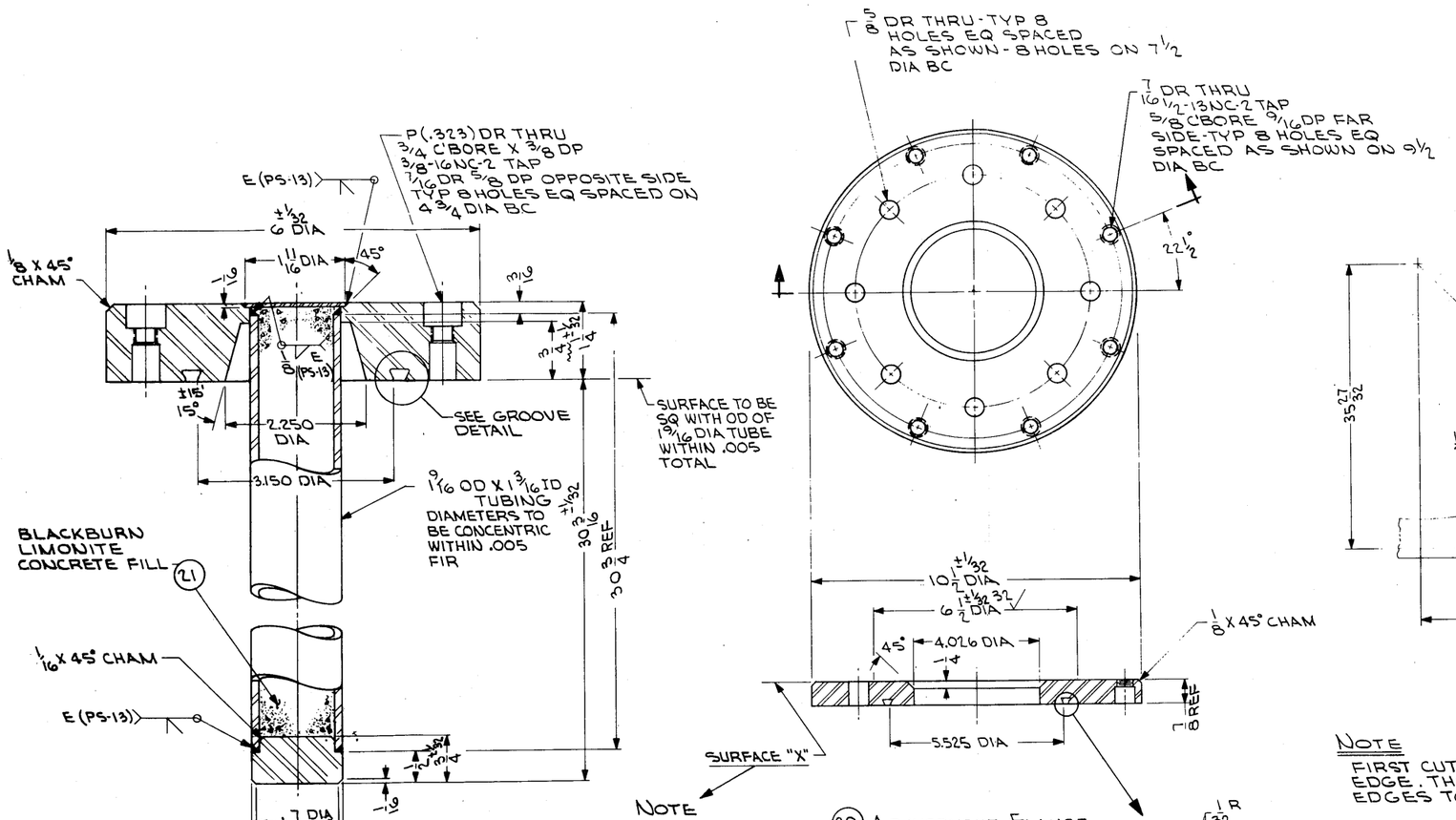

(44) INNER PLUG

MATL: ANY 300 SST & NOTED
2 REQD
SCALE: 1"=1"

NOTE

AT ASSY MACH SURFACE "X" TO PROVIDE FLG THICKNESS REQD FOR CORRECT LOCATION OF VALVE BODY, PART NO. 31 DWG EN-006-D, WITH THE EXTENSION BAR, PART NO. 48 DWG EN-008-D. IDENTIFY WITH PART NO. 31 AS TO "TOP" OR "BOTTOM" BY STAMPING EDGE OF FLG WITH 1/4 HIGH LETTERS.

(39) ADJUSTMENT FLANGE

MATL: ANY 300 SST
2 REQD
SCALE: 1/2"=1"

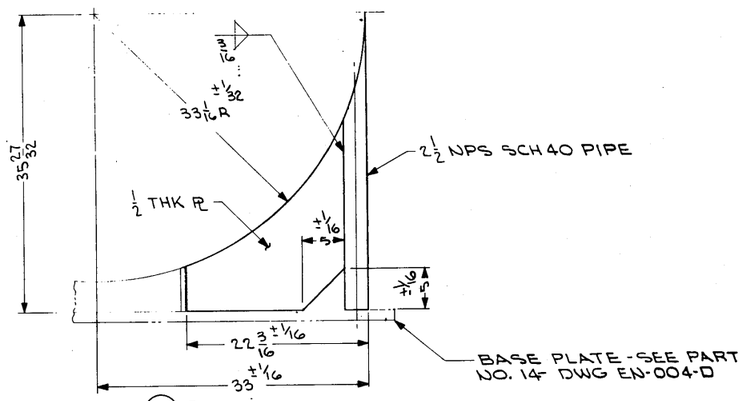

(8) STRUT

MATL: ANY 300 SST
8 REQD
SCALE: 1/8"=1"

NOTE

FIRST CUT GROOVE TO SHARP EDGE, THEN ROUND OFF EDGES TO DIM "A".

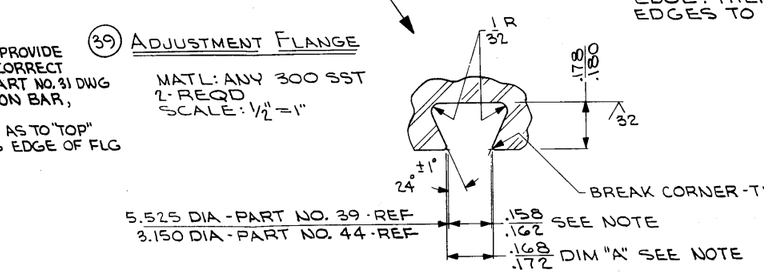

GROOVE DETAIL

SCALE: 4"=1"

REFERENCE DRAWINGS	NUMBER
DETAIL SH NO. 6	EN-008-D
DETAIL SH. NO. 4	EN-006-D
DETAIL SH NO. 2	EN-004-D
SHIPPING CARRIER ASSY	EN-001-D

OAK RIDGE NATIONAL LABORATORY
OPERATED BY
UNION CARBIDE CORPORATION
OAK RIDGE, TENNESSEE

TRU SHIPPING CARRIER — BLDG. NO. 7920

SHIPPING CARRIER DETAIL SHEET NO. 5

NO REPRESENTATION OR WARRANTY, EXPRESSED OR IMPLIED, IS MADE THAT THE USE OR DISCLOSURE OF ANY INFORMATION, APPARATUS, METHOD OR PROCESS DISCLOSED IN THESE DRAWINGS MAY NOT INFRINGE PRIVATE RIGHTS OF OTHERS. NO LIABILITY IS ASSUMED WITH RESPECT TO THE USE OF, OR FOR DAMAGES RESULTING FROM THE USE OF, ANY INFORMATION, APPARATUS, METHOD OR PROCESS DISCLOSED IN THESE DRAWINGS. THE DRAWINGS ARE BEING MADE AVAILABLE FOR INFORMATION TO BIDDER AND ARE NOT TO BE USED FOR OTHER PURPOSES, AND ARE TO BE RETURNED UPON REQUEST OF THE FORWARDING CONTRACTOR.

GENERAL SPECIFICATIONS
UNLESS OTHERWISE SPECIFIED:
1. BREAK ALL SHARP EDGES
2. TYPE, GRADE, OR FINISH OF MATERIAL MAY BE CHOSEN BY FABRICATOR.
3. MACHINED SURFACE FINISH SHALL NOT EXCEED: 63√ (ASA B46.1—1962)

TOLERANCES UNLESS OTHERWISE SPECIFIED:
FRACTIONS ± 1/64
DECIMALS ± .005
ANGLES ± 0°30'
SCALE: 1/2"=1" & NOTED

NO.	REVISIONS			DATE	APPD	APPD
DRAWN A. WILLIAMS	DATE 11-7-67	SUBMITTED	DATE	APPROVED	DATE	
DESIGNED S. O. Lewis	DATE 6-1-67	APPROVED	DATE	APPROVED	DATE	
CHECKED S. O. Lewis	DATE 10-24-67	APPROVED	DATE	APPROVED	DATE	

SUBMITTED: J. Sullivan — ACCEPTED: M. B. Buck — APPROVED: H. D. Duggan

M 11230 EN 007 D REV.

PARTS LIST					
PART	DWG NO.	REQD	DESCRIPTION	STOCK SIZE	MATERIAL

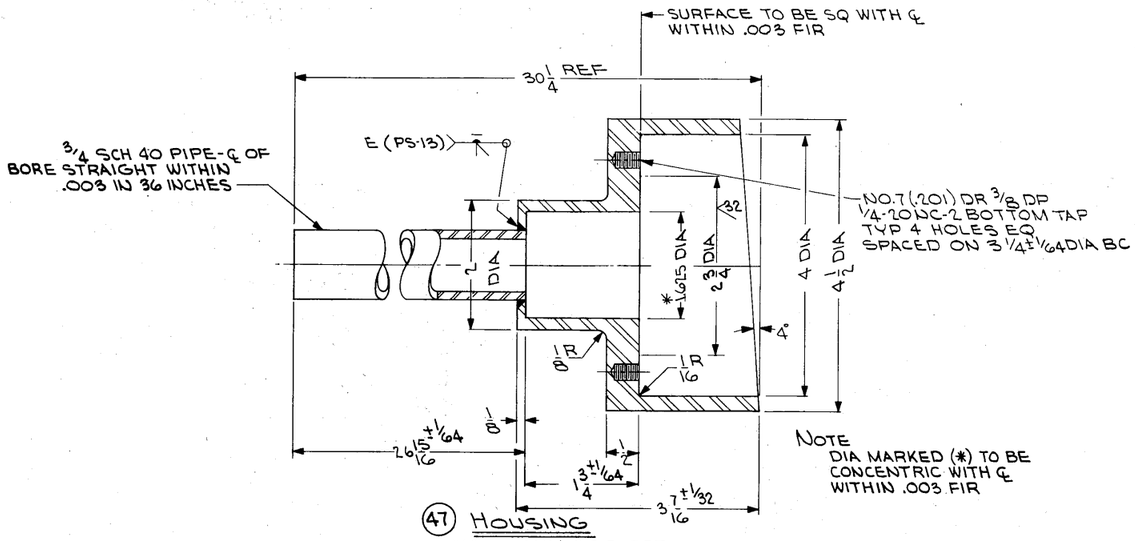

NOTE
DIA MARKED (*) TO BE CONCENTRIC WITH ℄ WITHIN .003 FIR

(47) HOUSING
MATL: ANY 300 SST
2 REQD
SCALE: 1" = 1"

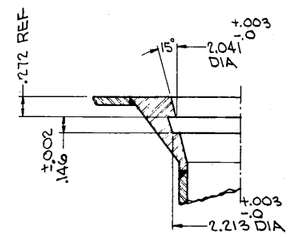

DETAIL "A"
SCALE: 1" = 1"

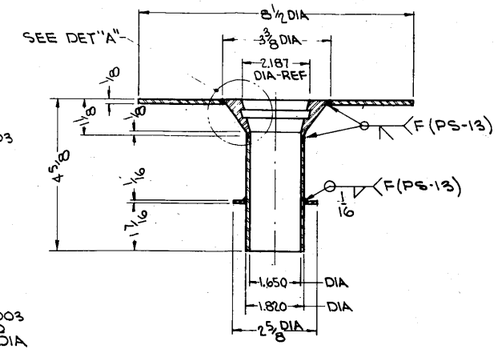

(58) ADAPTER
MATL: ANY 300 SST
1 REQD
SCALE: 1/2" = 1"

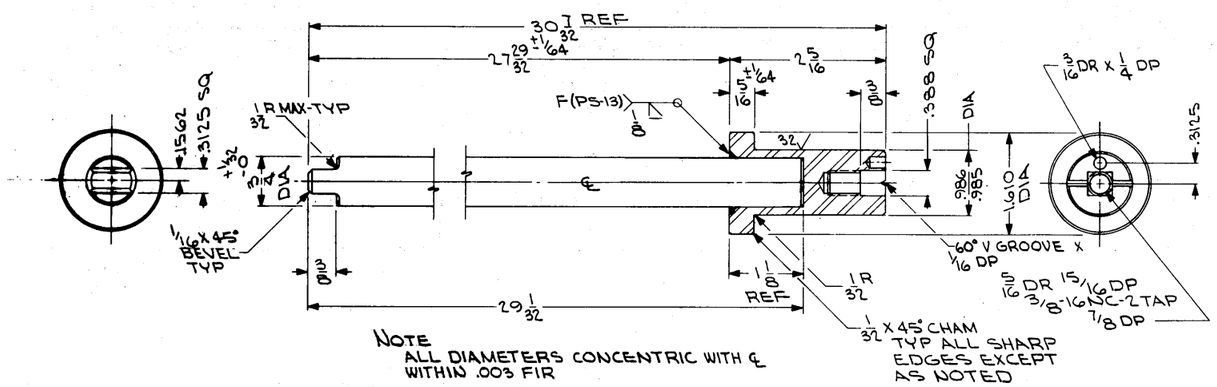

NOTE
ALL DIAMETERS CONCENTRIC WITH ℄ WITHIN .003 FIR

(48) EXTENSION BAR
MATL: ANY 300 SST
2 REQD
SCALE: 1" = 1"

NOTE:
FINAL MACHINE AFTER WELDING

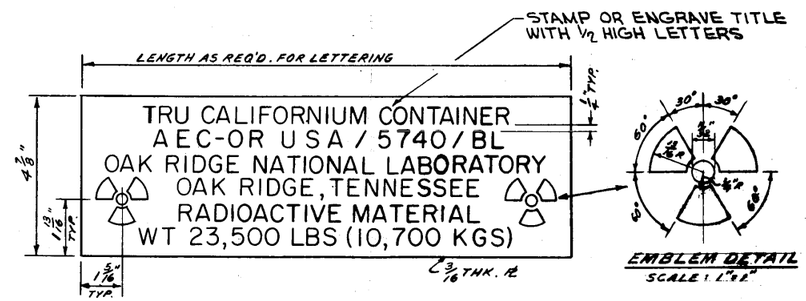

(60) NAME PLATE
MAT'L.: ANY 300 SST
1 REQ'D.
SCALE: 1/2" = 1"

SHIPPING CARRIER ASSY	EN-008
REFERENCE DRAWINGS	NUMBER

OAK RIDGE NATIONAL LABORATORY
OPERATED BY
UNION CARBIDE CORPORATION
OAK RIDGE, TENNESSEE

TRU SHIPPING CARRIER — BLDG. NO. 7920

SHIPPING CARRIER DETAIL SHEET NO. 6

NO REPRESENTATION OR WARRANTY, EXPRESSED OR IMPLIED, IS MADE THAT THE USE OR DISCLOSURE OF ANY INFORMATION, APPARATUS, METHOD OR PROCESS DISCLOSED IN THESE DRAWINGS MAY NOT INFRINGE PRIVATE RIGHTS OF OTHERS. NO LIABILITY IS ASSUMED WITH RESPECT TO THE USE OF, OR FOR DAMAGES RESULTING FROM THE USE OF, ANY INFORMATION, APPARATUS, METHOD OR PROCESS DISCLOSED IN THESE DRAWINGS. THE DRAWINGS ARE BEING MADE AVAILABLE FOR INFORMATION TO BIDDER AND ARE NOT TO BE USED FOR OTHER PURPOSES, AND ARE TO BE RETURNED UPON REQUEST OF THE FORWARDING CONTRACTOR.

GENERAL SPECIFICATIONS
UNLESS OTHERWISE SPECIFIED:
1. BREAK ALL SHARP EDGES
2. TYPE, GRADE, OR FINISH OF MATERIAL MAY BE CHOSEN BY FABRICATOR.
3. MACHINED SURFACE FINISH SHALL NOT EXCEED: 125 (ASA B46.1–1962)

TOLERANCES UNLESS OTHERWISE SPECIFIED:
FRACTIONS ± 1/32
DECIMALS ± .005
ANGLES ± 0° 30'
SCALE: NOTED

NO.	REVISIONS	DATE	APPD	APPD
1	CHGD. NAME PLATE-PART 60	10-24-74	J.J. Kim	11/21/74

	DRAWN	DATE	SUBMITTED	DATE	APPROVED	DATE
	A. WILLIAMS	7-12-67				
	DESIGNED	DATE	APPROVED	DATE	APPROVED	DATE
	S. Q. Lewis	6-1-67				
	CHECKED	DATE	APPROVED	DATE	APPROVED	DATE
	S. Q. Lewis	10-6-67				

SUBMITTED R. J. Gilligan — ACCEPTED W. B. Burch — APPROVED H. G. Duggan

M 11230 EN 008 D 1

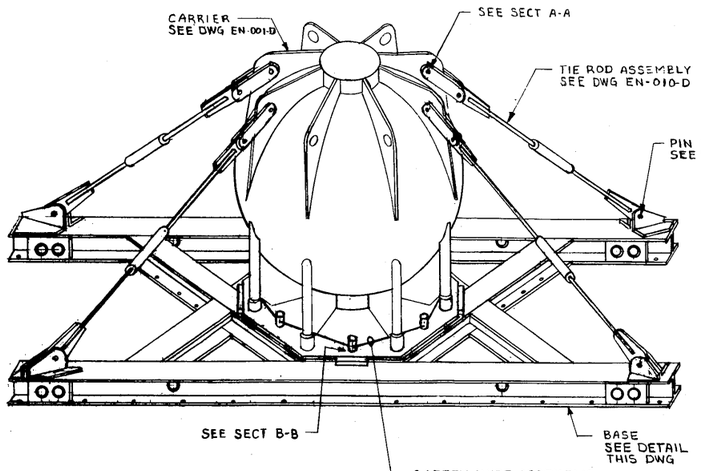

FINISH NOTE

SKID & TIE ROD ASSY.

CLEAN AND DEGREASE THOROUGHLY
MASK THREADS AND BEARING SURFACES
APPLY ZINC CHROMATE PRIMER AND
FINISH COAT OF RADIATION YELLOW

APPROX. SKID WEIGHT (LESS CARRIER) = 5180 LBS

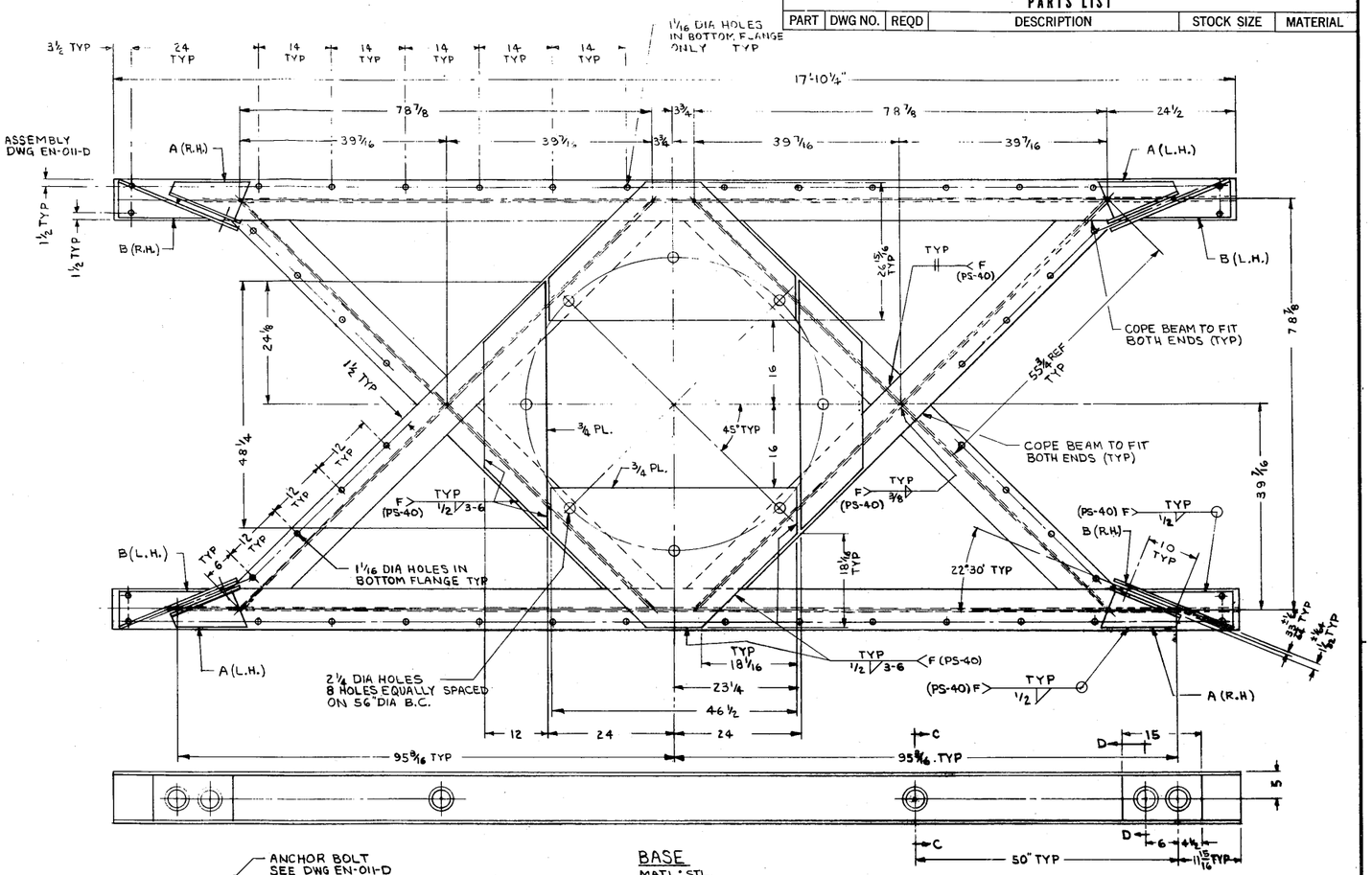

BASE

MATL: STL
REQ'D: 1
SCALE: 1" = 1'-0"
NOTE: ALL BEAMS ARE 10WF 45

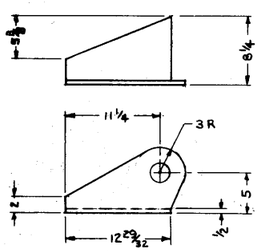

BRACKET A

MATL: STL
REQ'D: 4 2 (R.H.) AS SHOWN
2 (L.H.) OPP. HAND
SCALE: 1/8" = 1"

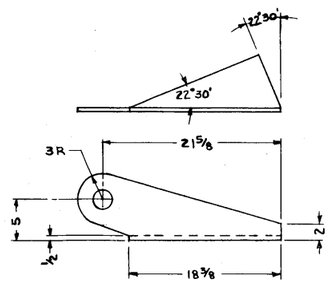

BRACKET B

MATL: STL
REQ'D: 4 2 (R.H.) AS SHOWN
2 (L.H.) OPP HAND
SCALE: 1/8" = 1"

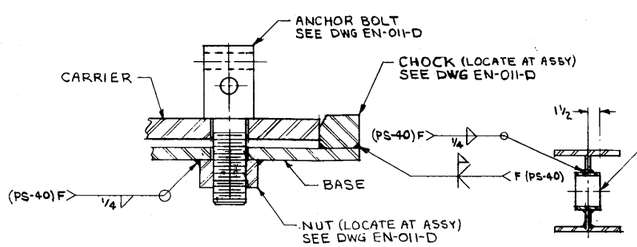

SECT B-B

SCALE: 1/4" = 1"

SECT C-C

SCALE: 1/8" = 1"

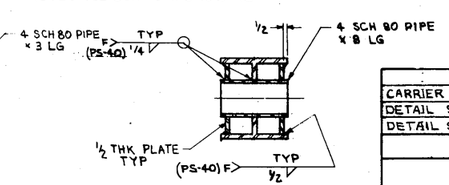

SECT D-D

SCALE: 1/8" = 1"

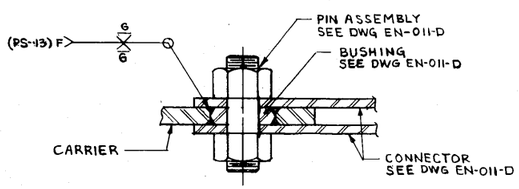

SECT "A-A"

SCALE: 1/4" = 1"

PARTS LIST

PART	DWG NO.	REQD	DESCRIPTION	STOCK SIZE	MATERIAL

REFERENCE DRAWINGS	NUMBER
CARRIER ASSEMBLY	EN-001-D
DETAIL SH 8	EN-011-D
DETAIL SH 7	EN-010-D

NO REPRESENTATION OR WARRANTY, EXPRESSED OR IMPLIED, IS MADE THAT THE USE OR DISCLOSURE OF ANY INFORMATION, APPARATUS, METHOD OR PROCESS DISCLOSED IN THESE DRAWINGS MAY NOT INFRINGE PRIVATE RIGHTS OF OTHERS. NO LIABILITY IS ASSUMED WITH RESPECT TO THE USE OF, OR FOR DAMAGES RESULTING FROM THE USE OF, ANY INFORMATION, APPARATUS, METHOD OR PROCESS DISCLOSED IN THESE DRAWINGS. THE DRAWINGS ARE BEING MADE AVAILABLE FOR INFORMATION TO BIDDER AND ARE NOT TO BE USED FOR OTHER PURPOSES, AND ARE TO BE RETURNED UPON REQUEST OF THE FORWARDING CONTRACTOR.

GENERAL SPECIFICATIONS

UNLESS OTHERWISE SPECIFIED:
1. BREAK ALL SHARP EDGES
2. TYPE, GRADE, OR FINISH OF MATERIAL MAY BE CHOSEN BY FABRICATOR.
3. MACHINED SURFACE FINISH SHALL NOT EXCEED: 63 (ASA B46.1–1962)

TOLERANCES UNLESS OTHERWISE SPECIFIED:
FRACTIONS ± 1/16
DECIMALS ± .005
ANGLES ± 0°30'
SCALE: NOTED

NO.	REVISIONS	DATE	APPD	APPD

DRAWN R.G. FARLEY	DATE 4/8/68	SUBMITTED	DATE	APPROVED	DATE 7/1/68	
DESIGNED S.O. Lewis	DATE 4-4-68	APPROVED	DATE	APPROVED	DATE	
CHECKED S.O. Lewis	DATE 4-16-68	APPROVED	DATE	APPROVED	DATE	

OAK RIDGE NATIONAL LABORATORY
OPERATED BY
UNION CARBIDE CORPORATION
OAK RIDGE, TENNESSEE

TRU SHIPPING CARRIER — BLDG. NO. 7920

SHIPPING CARRIER
SKID ASSEMBLY
AND DETAILS

SUBMITTED	ACCEPTED	APPROVED
	Wm. E. Unger	H. D. Duggan

M	11230	EN	009	D	REV.

PARTS LIST					
PART	DWG NO.	REQD	DESCRIPTION	STOCK SIZE	MATERIAL

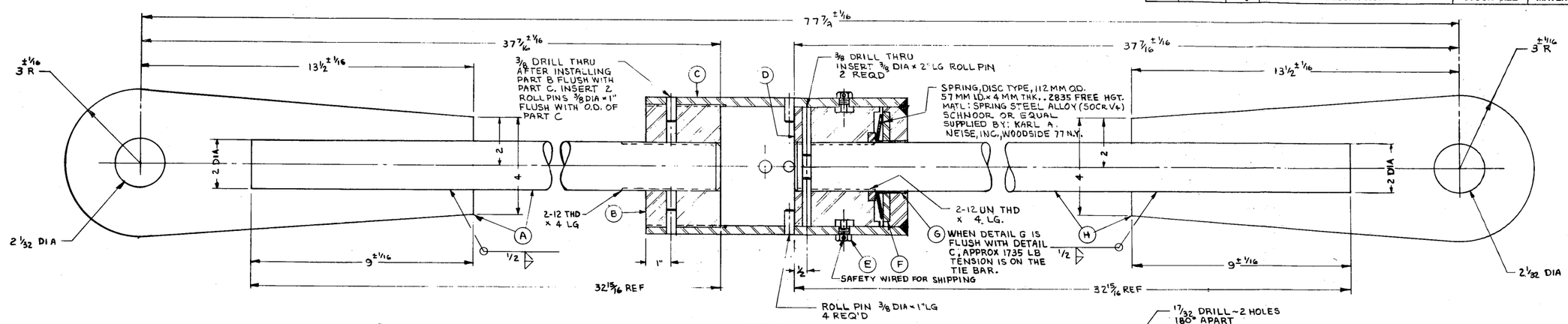

TIE ROD ASSY
MAT'L: STL
REQ'D: 4
SCALE: 1/2" = 1"

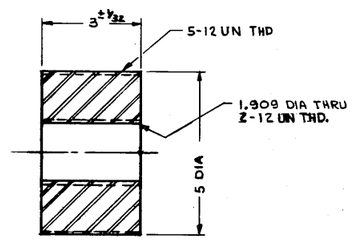

DETAIL B
SCALE: 1/2" = 1"
REQ'D: 4

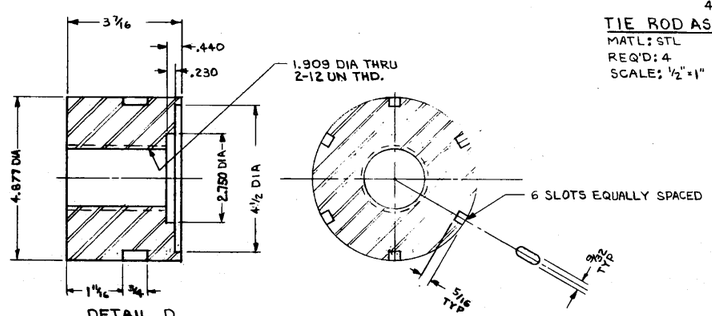

DETAIL D
SCALE: 1/2" = 1"
REQ'D: 4

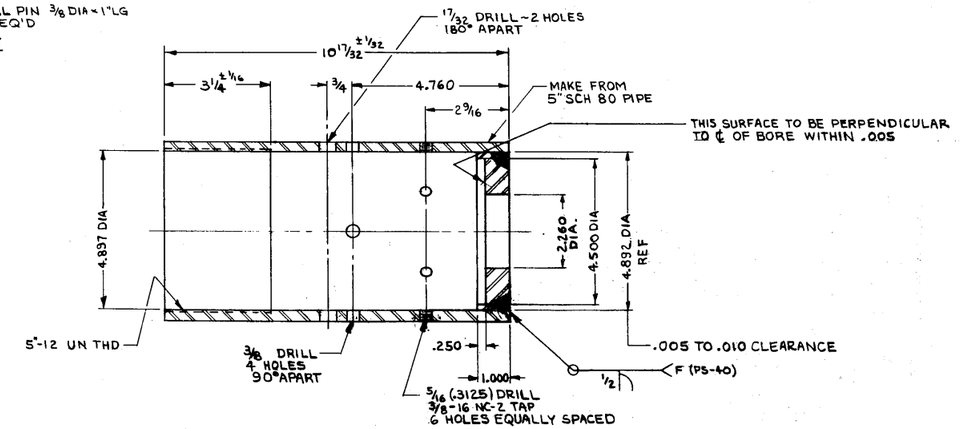

DETAIL C
SCALE: 1/2" = 1"
REQ'D: 4

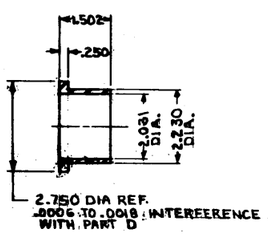

DETAIL G
MAT'L: STL AISI 1020
CASE HARDEN & TEMPER TO ROCKWELL C 50-55
SCALE: 1/2" = 1"
REQ'D: 4

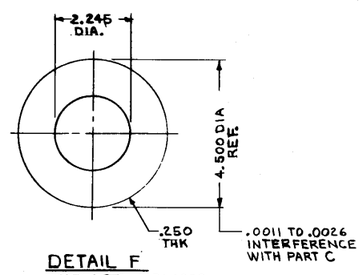

DETAIL F
MAT'L: STL AISI 1020
CASE HARDEN & TEMPER TO ROCKWELL C50-55
SCALE: 1/2" = 1"
REQ'D: 4

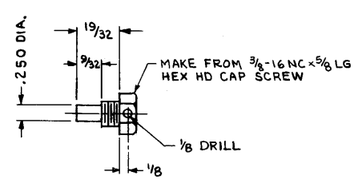

DETAIL E
MAT'L: STL
REQ'D: 24
SCALE: 1" = 1"

NO REPRESENTATION OR WARRANTY, EXPRESSED OR IMPLIED, IS MADE THAT THE USE OR DISCLOSURE OF ANY INFORMATION, APPARATUS, METHOD OR PROCESS DISCLOSED IN THESE DRAWINGS MAY NOT INFRINGE PRIVATE RIGHTS OF OTHERS. NO LIABILITY IS ASSUMED WITH RESPECT TO THE USE OF, OR FOR DAMAGES RESULTING FROM THE USE OF, ANY INFORMATION, APPARATUS, METHOD OR PROCESS DISCLOSED IN THESE DRAWINGS. THE DRAWINGS ARE BEING MADE AVAILABLE FOR INFORMATION TO BIDDER AND ARE NOT TO BE USED FOR OTHER PURPOSES, AND ARE TO BE RETURNED UPON REQUEST OF THE FORWARDING CONTRACTOR.

GENERAL SPECIFICATIONS
UNLESS OTHERWISE SPECIFIED:
1. BREAK ALL SHARP EDGES
2. TYPE, GRADE, OR FINISH OF MATERIAL MAY BE CHOSEN BY FABRICATOR.
3. MACHINED SURFACE FINISH SHALL NOT EXCEED: 63 (ASA B46.1—1962)

TOLERANCES UNLESS OTHERWISE SPECIFIED:
FRACTIONS ± 1/64
DECIMALS ± .005
ANGLES ± 0°30'
SCALE: NOTED

NO.	REVISIONS			DATE	APPD	APPD

DRAWN R.G. FARLEY	DATE 4-3-68	SUBMITTED	DATE	APPROVED R.B. Shupe	DATE 5/3/68
DESIGNED S.Q. Lewis	DATE 4-4-68	APPROVED	DATE	APPROVED	DATE
CHECKED S.Q. Lewis	DATE 4-16-68	APPROVED	DATE	APPROVED	DATE

SKID ASSEMBLY — EN-009-D
REFERENCE DRAWINGS — NUMBER

OAK RIDGE NATIONAL LABORATORY
OPERATED BY
UNION CARBIDE CORPORATION
OAK RIDGE, TENNESSEE

TRU SHIPPING CARRIER — BLDG. NO. 7920

SHIPPING CARRIER
SKID ASSEMBLY
DETAIL SH. 7

SUBMITTED	ACCEPTED	APPROVED
R.E. Zulliger	Wm. E. Unger	H.G. Duggan

M 112 30 EN 010 D REV.

PARTS LIST					
PART	DWG NO.	REQD	DESCRIPTION	STOCK SIZE	MATERIAL

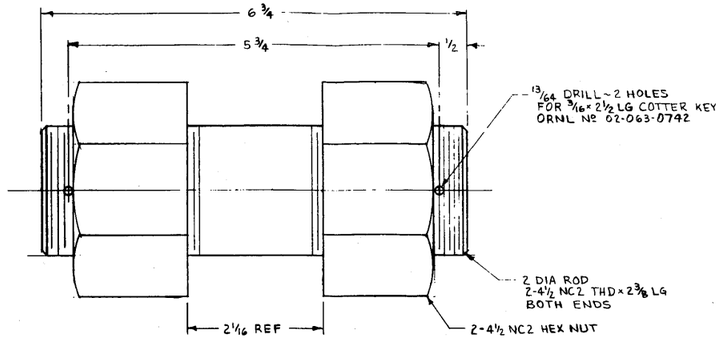

PIN ASSEMBLY
MATL: STL
REQ'D: 12
SCALE: 1" = 1"

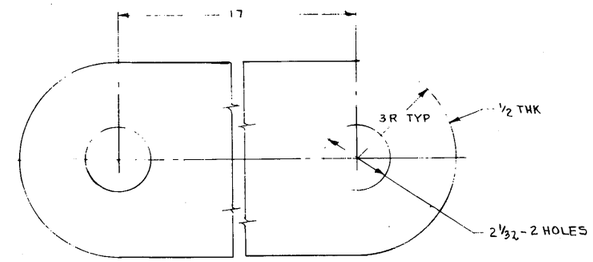

CONNECTOR
MATL: STL
REQ'D: 8
SCALE: 1/2" = 1"

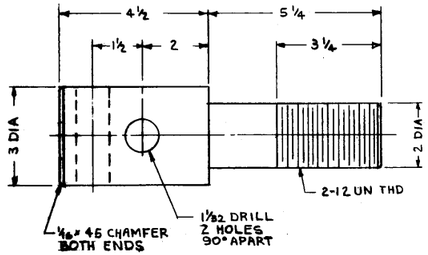

ANCHOR BOLT
MATL: STL
REQ'D: 8
SCALE: 1/2" = 1"

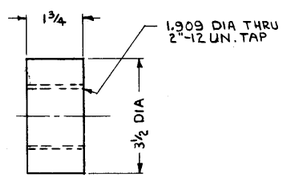

NUT
MATL: STL
REQ'D: 8
SCALE: 1/2" = 1"

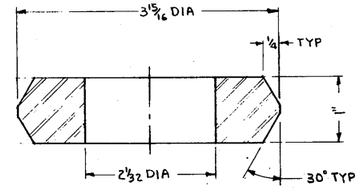

BUSHING
MATL: STL
REQ'D: 4
SCALE: 1" = 1"

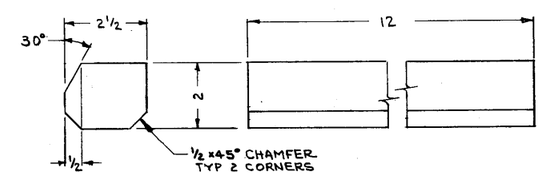

CHOCK
MATL: STL
REQ'D: 4
SCALE: 1/2" = 1"

NO REPRESENTATION OR WARRANTY, EXPRESSED OR IMPLIED, IS MADE THAT THE USE OR DISCLOSURE OF ANY INFORMATION, APPARATUS, METHOD OR PROCESS DISCLOSED IN THESE DRAWINGS MAY NOT INFRINGE PRIVATE RIGHTS OF OTHERS. NO LIABILITY IS ASSUMED WITH RESPECT TO THE USE OF, OR FOR DAMAGES RESULTING FROM THE USE OF, ANY INFORMATION, APPARATUS, METHOD OR PROCESS DISCLOSED IN THESE DRAWINGS. THE DRAWINGS ARE BEING MADE AVAILABLE FOR INFORMATION TO BIDDER AND ARE NOT TO BE USED FOR OTHER PURPOSES, AND ARE TO BE RETURNED UPON REQUEST OF THE FORWARDING CONTRACTOR.

GENERAL SPECIFICATIONS
UNLESS OTHERWISE SPECIFIED:
1. BREAK ALL SHARP EDGES
2. TYPE, GRADE, OR FINISH OF MATERIAL MAY BE CHOSEN BY FABRICATOR.
3. MACHINED SURFACE FINISH SHALL NOT EXCEED: (ASA B46.1–1962) 63

TOLERANCES UNLESS OTHERWISE SPECIFIED:
FRACTIONS ± 1/64
DECIMALS ± .005
ANGLES ± 0°30'
SCALE: 1" = 1"

NO.	REVISIONS	DATE	APPD	APPD

DRAWN	DATE	SUBMITTED	DATE	APPROVED	DATE
R.G. FARLEY	4-9-68				5/3/68
DESIGNED	DATE	APPROVED	DATE	APPROVED	DATE
S.O. Lewis	4-4-68				
CHECKED	DATE	APPROVED	DATE	APPROVED	DATE
S.O. Lewis	4-16-68				

SKID ASSEMBLY — EN-009-D
REFERENCE DRAWINGS — NUMBER

OAK RIDGE NATIONAL LABORATORY
OPERATED BY
UNION CARBIDE CORPORATION
OAK RIDGE, TENNESSEE

TRU SHIPPING CARRIER — BLDG. NO. 7920

SHIPPING CARRIER
SKID ASSEMBLY
DETAIL SH 8

SUBMITTED: A. L. Gallegos — ACCEPTED: Wm. E. Unger — APPROVED: H. L. Duggan

M 11230 EN 011 D REV.

PARTS LIST					
PART	DWG NO.	REQD	DESCRIPTION	STOCK SIZE	MATERIAL

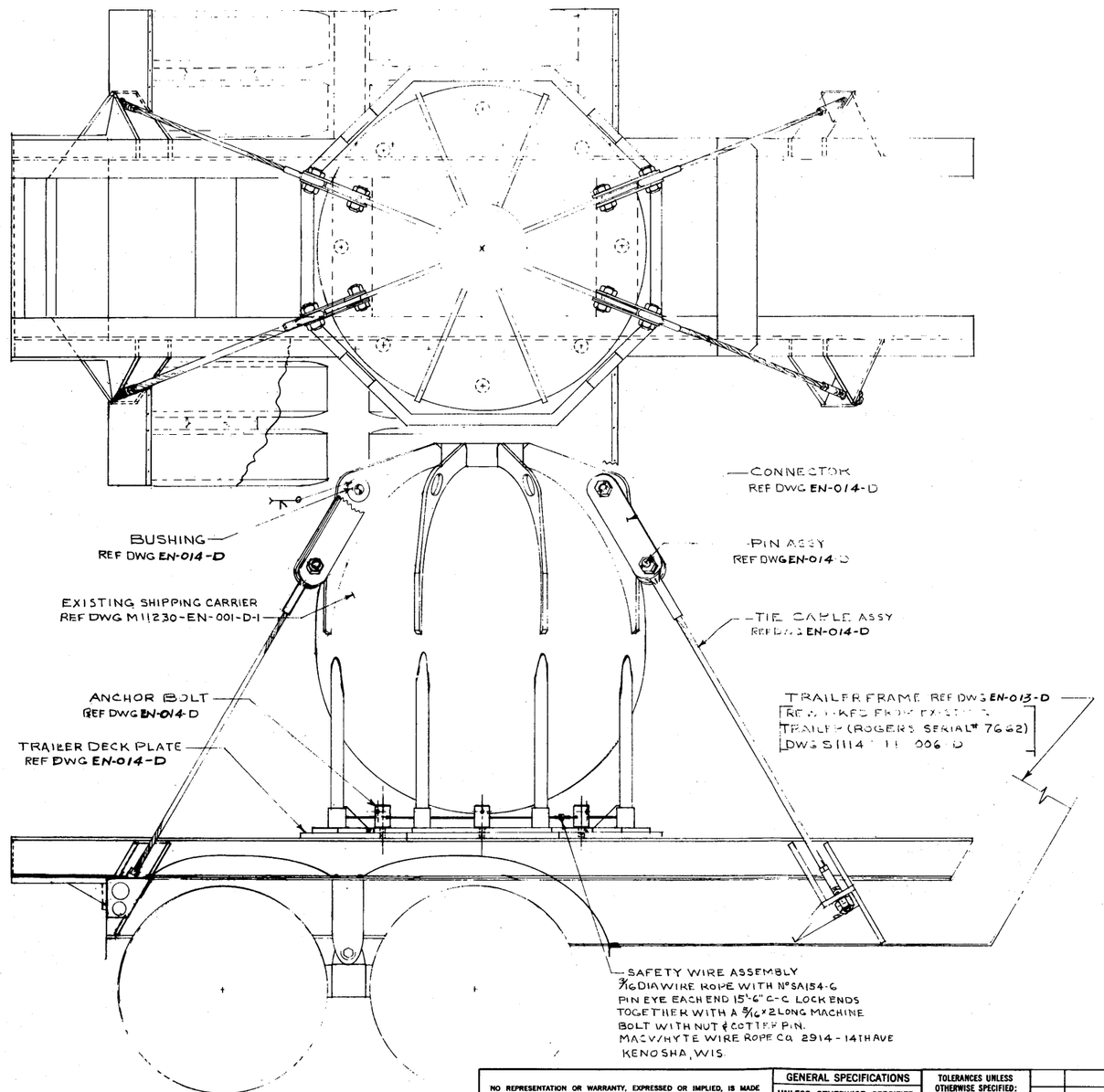

REFERENCE DRAWINGS	NUMBER
SHIPPING CARRIER ASSEMBLY	EN-001-D-1
EXISTING TRAILER FRAME DETAILS	S11147-EF-006-D
LIGHTING HOUSING DETAILS	EN-016-D
REAR TIE DOWN BRACKET DETAILS	EN-015-D
PARTS DETAILS	EN-014-D
TRAILER FRAME MODIFICATION DETAILS	EN-013-D

OAK RIDGE NATIONAL LABORATORY
OPERATED BY
UNION CARBIDE CORPORATION
OAK RIDGE, TENNESSEE

TRU SHIPPING CARRIER — BLDG. NO. 7920

SHIPPING CARRIER TRAILER MODIFICATION ASSEMBLY

SUBMITTED: E. J. Wenger — APPROVED: W. E. Unger — APPROVED: H. G. Duggan

M 11230 EN 012 D REV.

NO REPRESENTATION OR WARRANTY, EXPRESSED OR IMPLIED, IS MADE THAT THE USE OR DISCLOSURE OF ANY INFORMATION, APPARATUS, METHOD OR PROCESS DISCLOSED IN THESE DRAWINGS MAY NOT INFRINGE PRIVATE RIGHTS OF OTHERS. NO LIABILITY IS ASSUMED WITH RESPECT TO THE USE OF, OR FOR DAMAGES RESULTING FROM THE USE OF, ANY INFORMATION, APPARATUS, METHOD OR PROCESS DISCLOSED IN THESE DRAWINGS. THE DRAWINGS ARE BEING MADE AVAILABLE FOR INFORMATION TO BIDDER AND ARE NOT TO BE USED FOR OTHER PURPOSES, AND ARE TO BE RETURNED UPON REQUEST OF THE FORWARDING CONTRACTOR.

GENERAL SPECIFICATIONS
UNLESS OTHERWISE SPECIFIED:
1. BREAK ALL SHARP EDGES
2. TYPE, GRADE, OR FINISH OF MATERIAL MAY BE CHOSEN BY FABRICATOR.
3. MACHINED SURFACE FINISH SHALL NOT EXCEED: (ASA B46.1–1962) ✓

TOLERANCES UNLESS OTHERWISE SPECIFIED:
FRACTIONS ± ____
DECIMALS ± ____
ANGLES ± ____
SCALE: 1" = 1'-0"

NO.	REVISIONS	DATE	APPD	APPD

DRAWN	DATE	SUBMITTED	DATE	APPROVED	DATE	
DESIGNED SQ Davis	DATE 5-28-68	APPROVED	DATE	APPROVED	DATE	
CHECKED SQ Davis	DATE 6-24-68	APPROVED	DATE	APPROVED LB Shepherd	DATE	

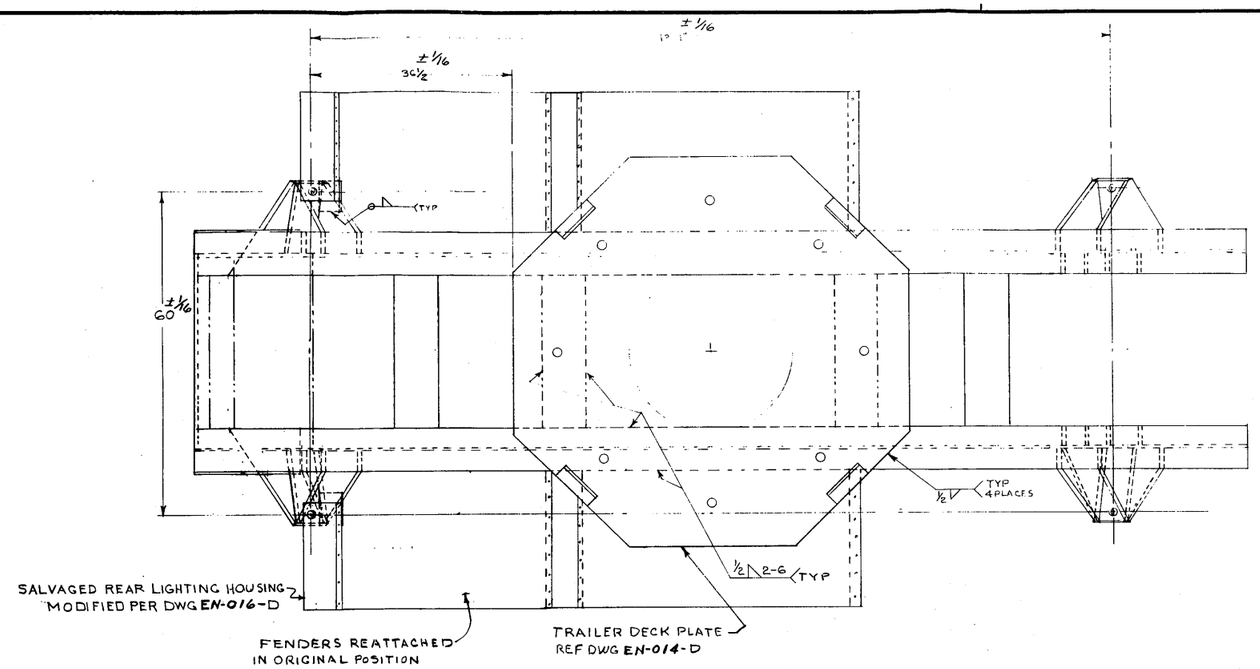

PARTS LIST					
PART	DWG NO.	REQD	DESCRIPTION	STOCK SIZE	MATERIAL

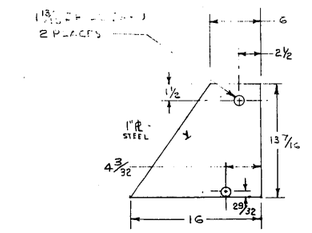

PLATE "B"
2 REQD MATL STEEL
SCALE ⅛" = 1"

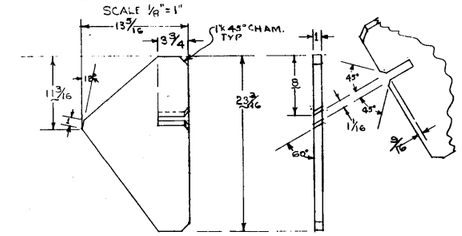

PLATE "A"
Nº REQD 1 EACH RIGHT & LEFT HAND
SCALE ⅛" = 1"
MATL STEEL
RIGHT HAND SHOWN

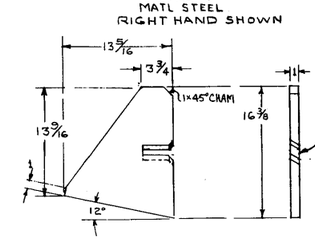

PLATE "C"
MATL STEEL
Nº REQD 1 EACH RIGHT & LEFT HAND
SCALE ⅛" = 1"
LEFT HAND SHOWN

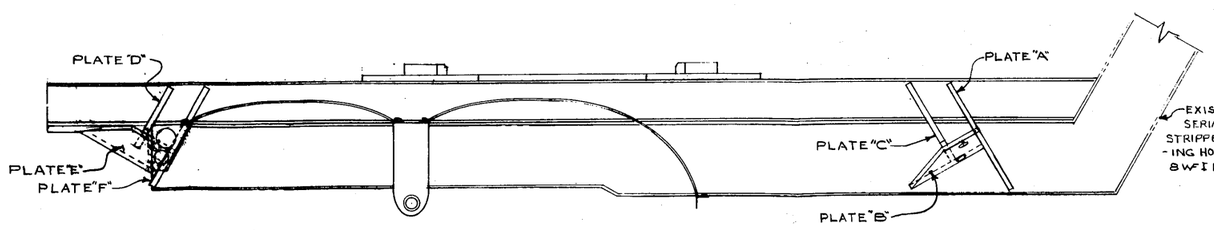

REF DWG EN-015-D FOR DETAILS
OF PLATES "D", "E" & "F"

REFERENCE DRAWINGS	NUMBER
LIGHTING HOUSING DETAILS	EN-016-D
TRAILER MODIFICATION	EN-014-D
REAR TIE DOWN BRACKET DETAILS	EN-015-D
SHIPPING CARRIER TRAILER MODIFICATION ASSY	EN-012-D

OAK RIDGE NATIONAL LABORATORY
OPERATED BY
UNION CARBIDE CORPORATION
OAK RIDGE, TENNESSEE

TRU SHIPPING CARRIER — BLDG. NO. 7920

SHIPPING CARRIER TRAILER MODIFICATION
TRAILER FRAME MODIFICATION DETAILS

NO REPRESENTATION OR WARRANTY, EXPRESSED OR IMPLIED, IS MADE THAT THE USE OR DISCLOSURE OF ANY INFORMATION, APPARATUS, METHOD OR PROCESS DISCLOSED IN THESE DRAWINGS MAY NOT INFRINGE PRIVATE RIGHTS OF OTHERS. NO LIABILITY IS ASSUMED WITH RESPECT TO THE USE OF, OR FOR DAMAGES RESULTING FROM THE USE OF, ANY INFORMATION, APPARATUS, METHOD OR PROCESS DISCLOSED IN THESE DRAWINGS. THE DRAWINGS ARE BEING MADE AVAILABLE FOR INFORMATION TO BIDDER AND ARE NOT TO BE USED FOR OTHER PURPOSES, AND ARE TO BE RETURNED UPON REQUEST OF THE FORWARDING CONTRACTOR.

GENERAL SPECIFICATIONS
UNLESS OTHERWISE SPECIFIED:
1. BREAK ALL SHARP EDGES
2. TYPE, GRADE, OR FINISH OF MATERIAL MAY BE CHOSEN BY FABRICATOR.
3. MACHINED SURFACE FINISH SHALL NOT EXCEED: (ASA B46.1—1962) ✓

TOLERANCES UNLESS OTHERWISE SPECIFIED:
FRACTIONS ± 1/32
DECIMALS ± —
ANGLES ± 1°-0'
SCALE: 1" = 1'-0" NOTED

NO.	REVISIONS			DATE	APPD	APPD
DRAWN L. Hodgel	DATE 11 JUNE 68	SUBMITTED	DATE	APPROVED		DATE
DESIGNED S.O. Lewis	DATE 5-24-68	APPROVED	DATE	APPROVED		DATE
CHECKED S.O. Lewis	DATE 6-24-68	APPROVED	DATE	APPROVED L.B. Shappert		DATE

SUBMITTED F.L. Zeiger — APPROVED W.E. Unger — APPROVED H.G. Burgan

M 11230 EN 013 D REV.

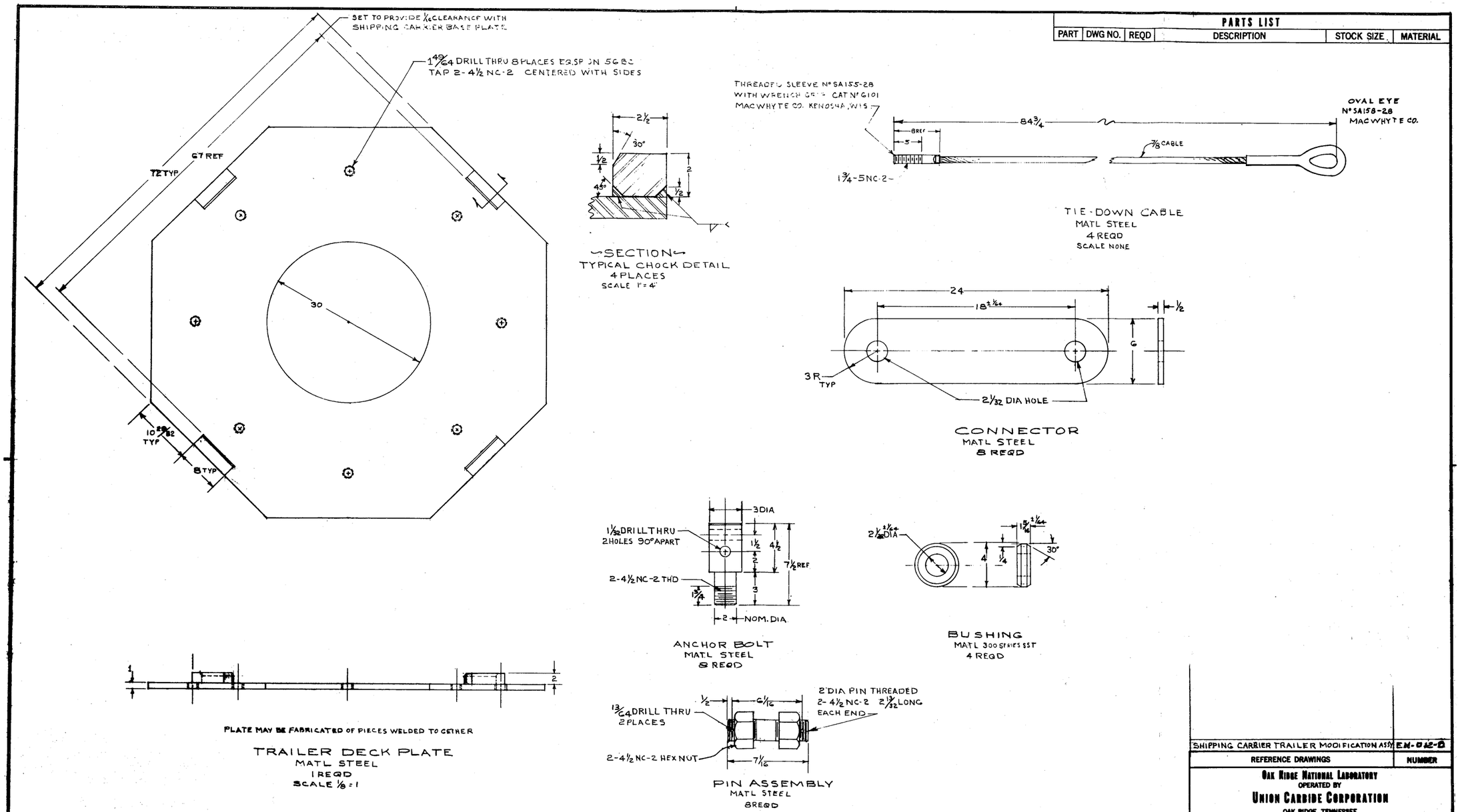

PARTS LIST

PART	DWG NO.	REQD	DESCRIPTION	STOCK SIZE	MATERIAL

NO REPRESENTATION OR WARRANTY, EXPRESSED OR IMPLIED, IS MADE THAT THE USE OR DISCLOSURE OF ANY INFORMATION, APPARATUS, METHOD OR PROCESS DISCLOSED IN THESE DRAWINGS MAY NOT INFRINGE PRIVATE RIGHTS OF OTHERS. NO LIABILITY IS ASSUMED WITH RESPECT TO THE USE OF, OR FOR DAMAGES RESULTING FROM THE USE OF, ANY INFORMATION, APPARATUS, METHOD OR PROCESS DISCLOSED IN THESE DRAWINGS. THE DRAWINGS ARE BEING MADE AVAILABLE FOR INFORMATION TO BIDDER AND ARE NOT TO BE USED FOR OTHER PURPOSES, AND ARE TO BE RETURNED UPON REQUEST OF THE FORWARDING CONTRACTOR.

GENERAL SPECIFICATIONS

UNLESS OTHERWISE SPECIFIED:
1. BREAK ALL SHARP EDGES
2. TYPE, GRADE, OR FINISH OF MATERIAL MAY BE CHOSEN BY FABRICATOR.
3. MACHINED SURFACE FINISH SHALL NOT EXCEED: (ASA B46.1—1962) ✓

TOLERANCES UNLESS OTHERWISE SPECIFIED:
FRACTIONS ± 1/32
DECIMALS ± .005
ANGLES ± 1°-0'
SCALE: 1/4 = 1' NOTED

NO.	REVISIONS				DATE	APPD	APPD
DRAWN L.E. Engel	DATE 19 June 68	SUBMITTED	DATE	APPROVED	DATE		
DESIGNED S.D. Lewis	DATE 5-28-68	APPROVED	DATE	APPROVED	DATE		
CHECKED S.D. Lewis	DATE 6-25-68	APPROVED	DATE	APPROVED X.B. Sharpe	DATE		

SHIPPING CARRIER TRAILER MODIFICATION ASSY EN-012-D

REFERENCE DRAWINGS | NUMBER

OAK RIDGE NATIONAL LABORATORY
OPERATED BY
UNION CARBIDE CORPORATION
OAK RIDGE, TENNESSEE

TRU SHIPPING CARRIER BLDG. NO. 7928

SHIPPING CARRIER TRAILER MODIFICATION
DETAILS

SUBMITTED D.D. Gulligan | ACCEPTED W.E. Mason | APPROVED H.E. Bungard

M 11230 EN 014 D

PARTS LIST					
PART	DWG NO.	REQD	DESCRIPTION	STOCK SIZE	MATERIAL

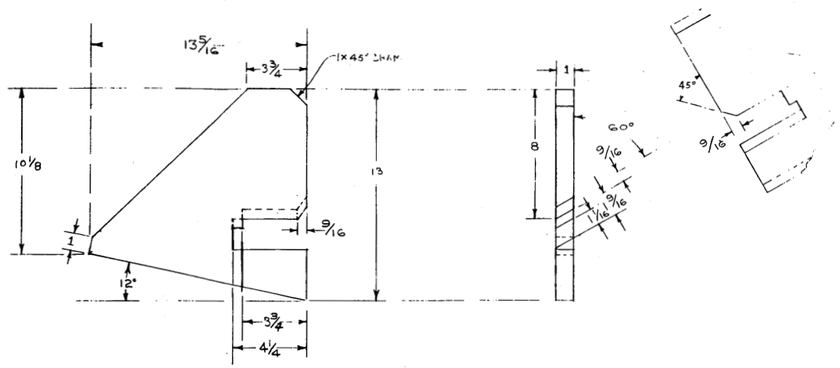

PLATE "D"
MATL STEEL
Nº REQD 1 EACH RIGHT & LEFT HAND
LEFT HAND SHOWN

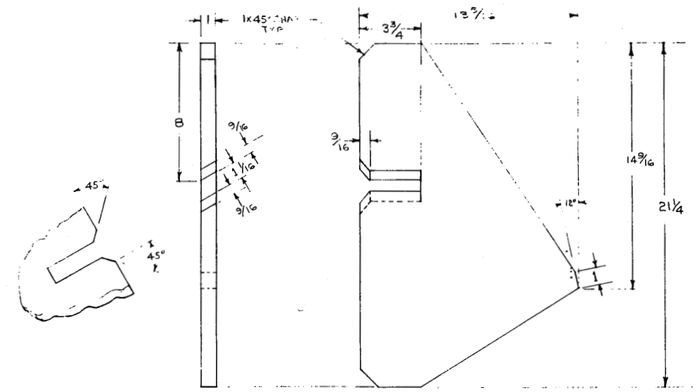

PLATE "F"
MATL STEEL
Nº REQD 1 EACH OF RIGHT & LEFT HAND
LEFT HAND SHOWN

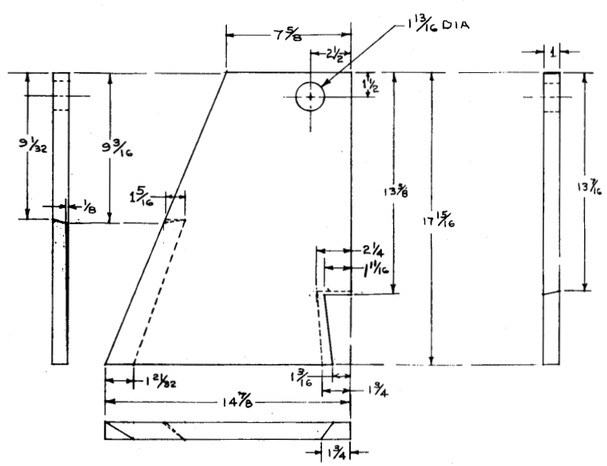

PLATE "E"
MATL STEEL
Nº REQD 1 EACH RIGHT & LEFT HAND
RIGHT HAND SHOWN

NO REPRESENTATION OR WARRANTY, EXPRESSED OR IMPLIED, IS MADE THAT THE USE OR DISCLOSURE OF ANY INFORMATION, APPARATUS, METHOD OR PROCESS DISCLOSED IN THESE DRAWINGS MAY NOT INFRINGE PRIVATE RIGHTS OF OTHERS. NO LIABILITY IS ASSUMED WITH RESPECT TO THE USE OF, OR FOR DAMAGES RESULTING FROM THE USE OF, ANY INFORMATION, APPARATUS, METHOD OR PROCESS DISCLOSED IN THESE DRAWINGS. THE DRAWINGS ARE BEING MADE AVAILABLE FOR INFORMATION TO BIDDER AND ARE NOT TO BE USED FOR OTHER PURPOSES, AND ARE TO BE RETURNED UPON REQUEST OF THE FORWARDING CONTRACTOR.

GENERAL SPECIFICATIONS
UNLESS OTHERWISE SPECIFIED:
1. BREAK ALL SHARP EDGES
2. TYPE, GRADE, OR FINISH OF MATERIAL MAY BE CHOSEN BY FABRICATOR.
3. MACHINED SURFACE FINISH SHALL NOT EXCEED: 125 √ (ASA B46.1—1962)

TOLERANCES UNLESS OTHERWISE SPECIFIED:
FRACTIONS ± 1/32
DECIMALS ± —
ANGLES ± 1° - 0'
SCALE: 1/4" = 1"

NO.	REVISIONS	DATE	APPD	APPD

DRAWN	DATE	SUBMITTED	DATE	APPROVED	DATE
[illegible]	11 JUNE 68				
DESIGNED	DATE	APPROVED	DATE	APPROVED	DATE
S. Q. Harris	5-24-68				
CHECKED	DATE	APPROVED	DATE	APPROVED	DATE
S. Q. Harris	6-24-68			L. B. Shappert	

ASSEMBLY	EN-012-D
TRAILER FRAME MODIFICATION	EN-013-D
REFERENCE DRAWINGS	NUMBER

OAK RIDGE NATIONAL LABORATORY
OPERATED BY
UNION CARBIDE CORPORATION
OAK RIDGE, TENNESSEE

TRU SHIPPING CARRIER — BLDG. NO. 7920

SHIPPING CARRIER TRAILER MODIFICATION:
REAR TIE DOWN BRACKET DETAILS

SUBMITTED: A. L. Gilligan — ACCEPTED: [illegible] — APPROVED: H. V. Duggan

M 11230 EN 015 D REV.

PARTS LIST					
PART	DWG NO.	REQD	DESCRIPTION	STOCK SIZE	MATERIAL

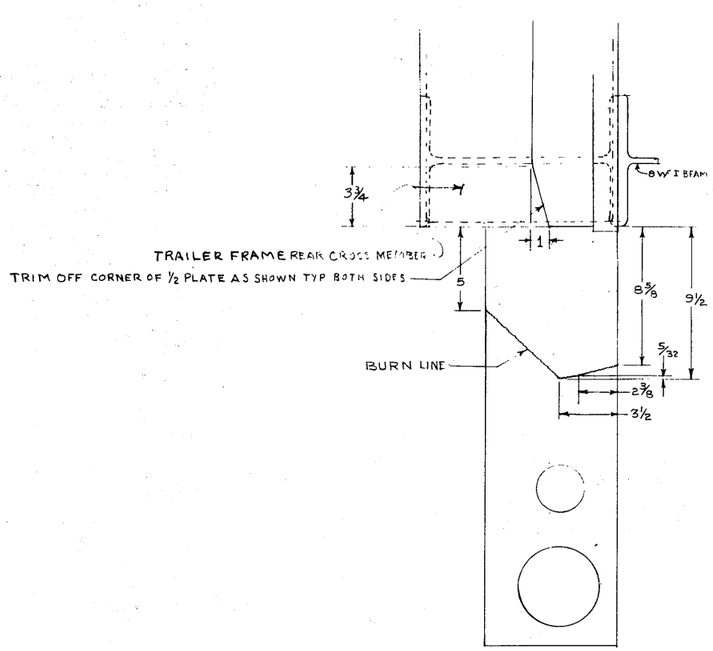

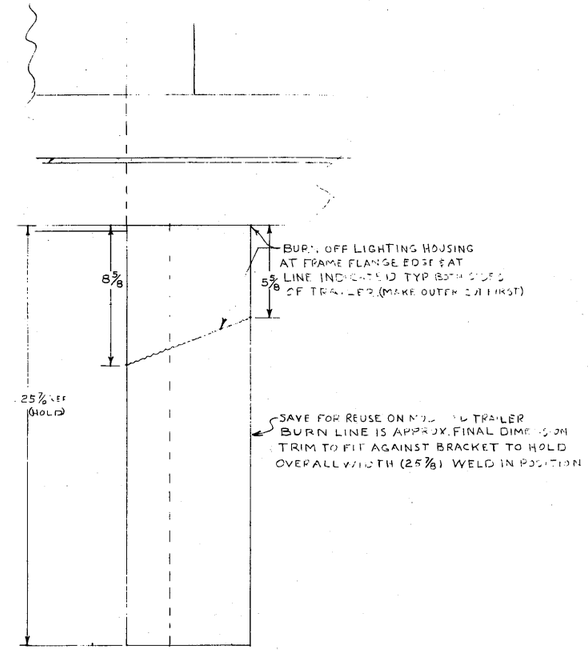

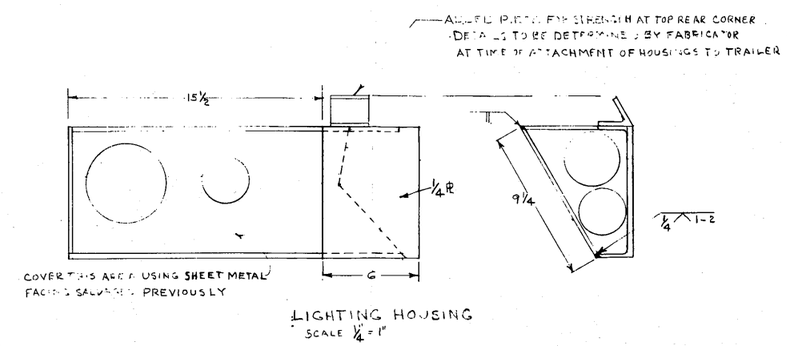

LIGHTING HOUSING
SCALE ¼" = 1"

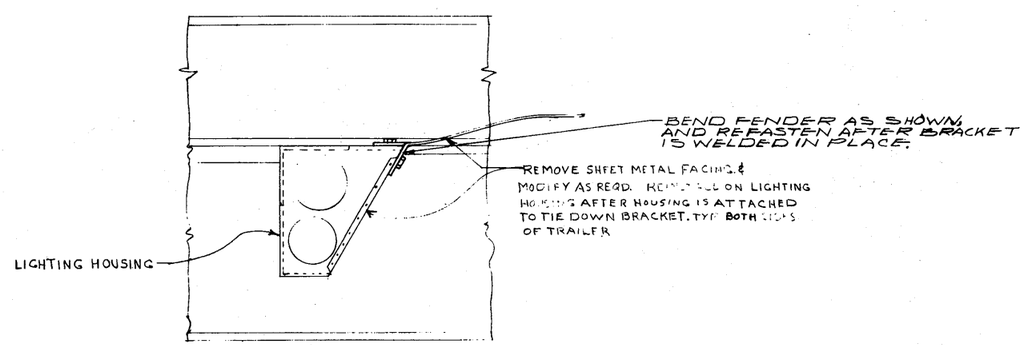

RIGHT SIDE ELEVATION

NO REPRESENTATION OR WARRANTY, EXPRESSED OR IMPLIED, IS MADE THAT THE USE OR DISCLOSURE OF ANY INFORMATION, APPARATUS, METHOD OR PROCESS DISCLOSED IN THESE DRAWINGS MAY NOT INFRINGE PRIVATE RIGHTS OF OTHERS. NO LIABILITY IS ASSUMED WITH RESPECT TO THE USE OF, OR FOR DAMAGES RESULTING FROM THE USE OF, ANY INFORMATION, APPARATUS, METHOD OR PROCESS DISCLOSED IN THESE DRAWINGS. THE DRAWINGS ARE BEING MADE AVAILABLE FOR INFORMATION TO BIDDER AND ARE NOT TO BE USED FOR OTHER PURPOSES, AND ARE TO BE RETURNED UPON REQUEST OF THE FORWARDING CONTRACTOR.

GENERAL SPECIFICATIONS

UNLESS OTHERWISE SPECIFIED:
1. BREAK ALL SHARP EDGES
2. TYPE, GRADE, OR FINISH OF MATERIAL MAY BE CHOSEN BY FABRICATOR.
3. MACHINED SURFACE FINISH SHALL NOT EXCEED: (ASA B46.1—1962) ✓

TOLERANCES UNLESS OTHERWISE SPECIFIED:
FRACTIONS ± 1/32
DECIMALS ± ——
ANGLES ± ——
SCALE: ¼" = 1"

NO.	REVISIONS	DATE	APPD	APPD

DRAWN	DATE	SUBMITTED	DATE	APPROVED	DATE
L.L. Eng. C	12 Jun 68				
DESIGNED S.O. Lewis	DATE 5-24-68	APPROVED	DATE	APPROVED	DATE
CHECKED S.O. Lewis	DATE 6-24-68	APPROVED	DATE	APPROVED L.B. Shippert	DATE

ASSY	EN-012-D
TRAILER FRAME MODIFICATION DETAILS	EN-013-D
REFERENCE DRAWINGS	NUMBER

OAK RIDGE NATIONAL LABORATORY
OPERATED BY
UNION CARBIDE CORPORATION
OAK RIDGE, TENNESSEE

TRU SHIPPING CARRIER — BLDG. NO. 7920

SHIPPING CARRIER TRAILER MODIFICATION
LIGHTING HOUSING DETAILS

SUBMITTED G.T. Zelinger — REVIEWED W.E. Mugge — APPROVED H.B. Duggan

M	11230	EN	016	D	REV.

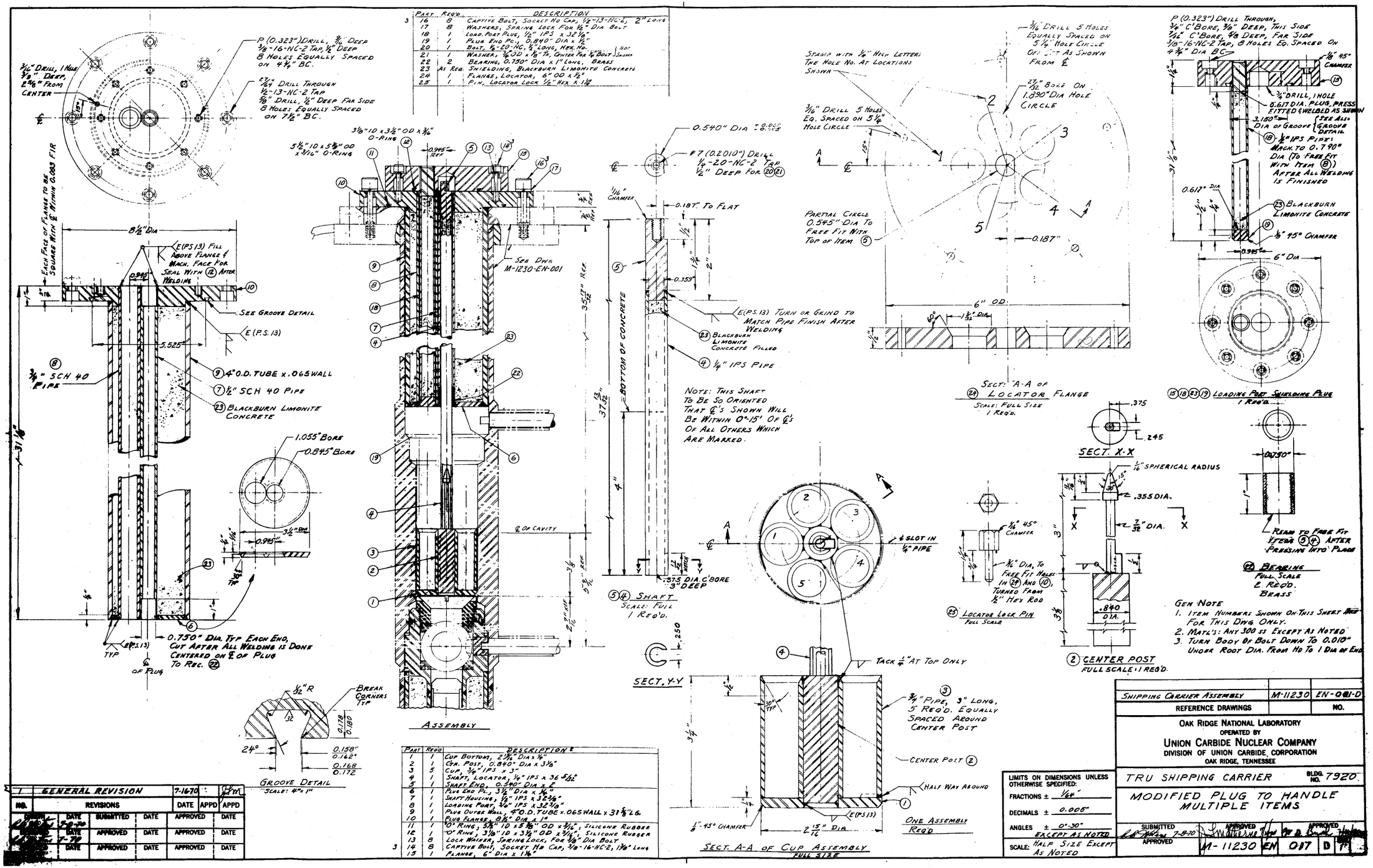

Part	Req'd	Description
16	8	Captive Bolt, Socket Hd Cap, 3/8-13-NC-2, 2" Long
17	8	Washers, Spring Lock For 1/2" Dia Bolt
18	1	Load. Port Plug, 1/2" IPS x 32 1/8"
19	1	Plug End Pc., 0.840" Dia x 1/2"
20	1	Bolt, 1/4-20-NC, 1/2" Long, Hex. Hd.
21	1	Washer, 3/8 OD x 1/8" Th. Center For 1/4" Bolt } Not Shown
22	2	Bearing, 0.790" Dia x 1" Long, Brass
23	As Req'd.	Shielding, Blackburn Limonite Concrete
24	1	Flange, Locator, 6" OD x 1/2"
25	1	Pin, Locator Lock 1/2" Hex x 1 1/4"

Part	Req'd	Description
1	1	Cup Bottom, 2 15/16" Dia x 1/4"
2	1	Ctr. Post, 0.840" Dia x 3 1/8"
3	5	Cup 3/4" IPS x 3"
4	1	Shaft, Locator, 1/4" IPS x 36 5/32"
5	1	Shaft End, 0.540" Dia x 2"
6	1	Plug End Pc., 3 1/2" Dia x 3/4"
7	1	Shaft Housing, 1/2" IPS x 32 3/8"
8	1	Loading Port, 3/4" IPS x 32 7/16"
9	1	Plug Outer Wall, 4" O.D. Tube x .065 Wall x 31 5/8" Lg.
10	1	Plug Flange, 8 1/2" Dia x 1"
11	1	"O" Ring, 5 3/8" ID x 5 5/16" OD x 3/16"; Silicone Rubber
12	1	"O" Ring, 3/8" ID x 3 1/2" OD x 3/16"; Silicone Rubber
13	8	Lock Washer, Spring Lock, For 3/8" Dia Bolt
14	8	Captive Bolt, Socket Hd Cap, 3/8-16-NC-2, 1 3/8" Long
15	1	Flange, 6" Dia x 1 1/8"

No.	Revisions	Date	Appd	Appd
1	General Revision	7-16-70		

Drawn	Date	Submitted	Date	Approved	Date	Approved	Date
	7-8-70						
	7-8-70						

Limits on Dimensions Unless Otherwise Specified:
Fractions ± 1/64"
Decimals ± 0.005"
Angles ± 0°-30'
Except As Noted
Scale: Half Size Except As Noted

Shipping Carrier Assembly	M-11230	EN-001-D
Reference Drawings		No.

Oak Ridge National Laboratory
Operated By
Union Carbide Nuclear Company
Division of Union Carbide Corporation
Oak Ridge, Tennessee

TRU Shipping Carrier — Bldg. No. 7920

Modified Plug To Handle Multiple Items

Submitted: 7-8-70 — Approved — Approved — Approved

M-11230 EM 017 D

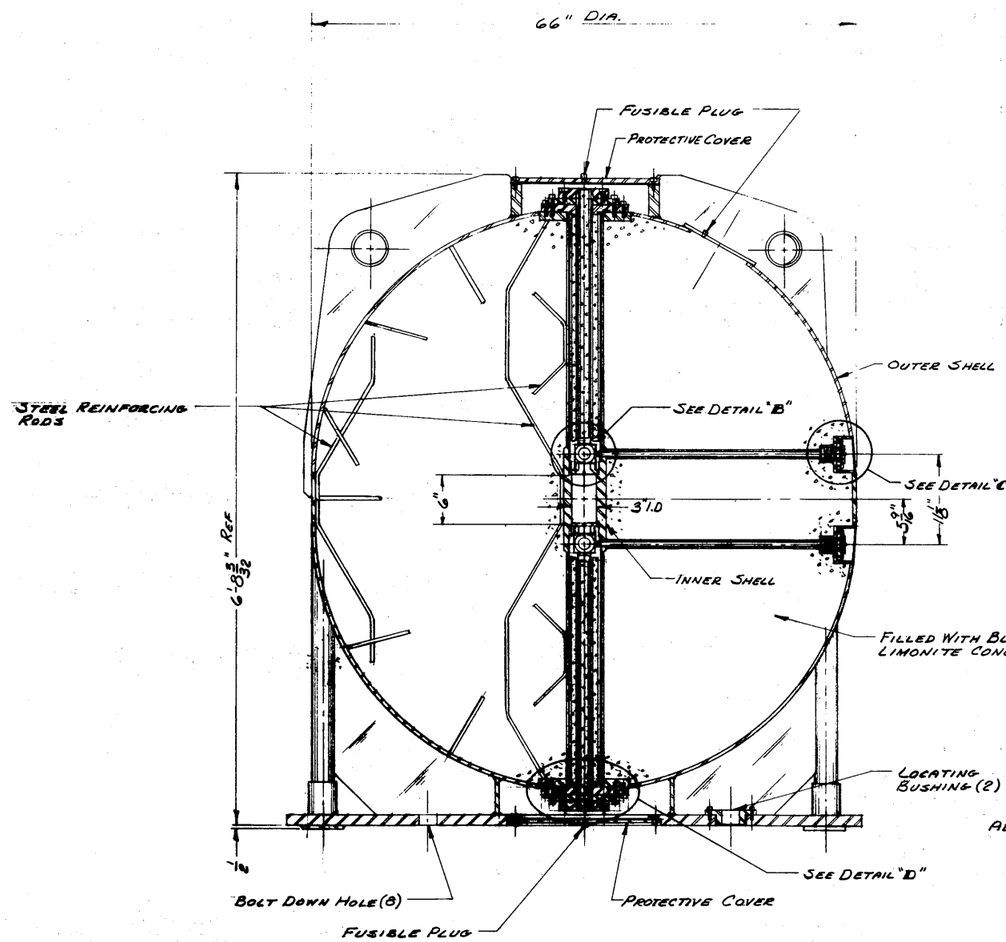

SECTION A-A
SCALE 1/8" = 1"

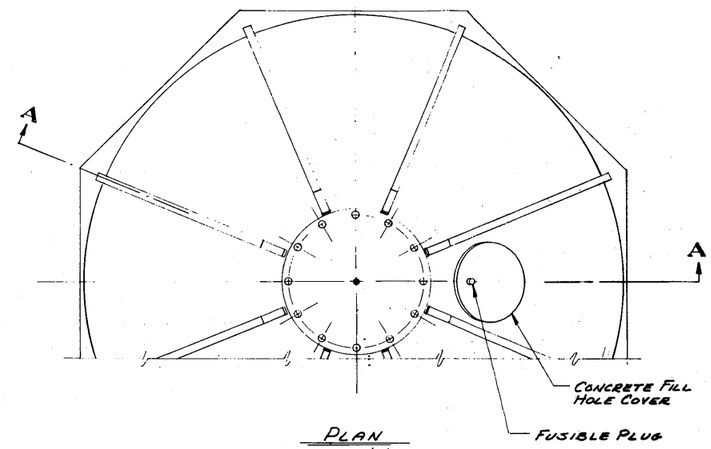

PLAN
SCALE 1/8" = 1"

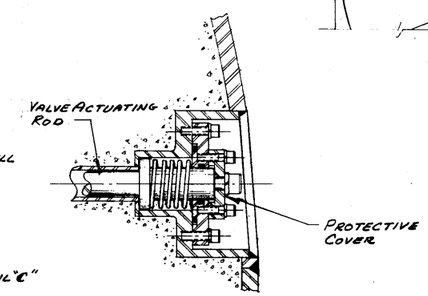

VALVE OPENING DEVICE DETAIL "C"
SCALE 1/2" = 1"

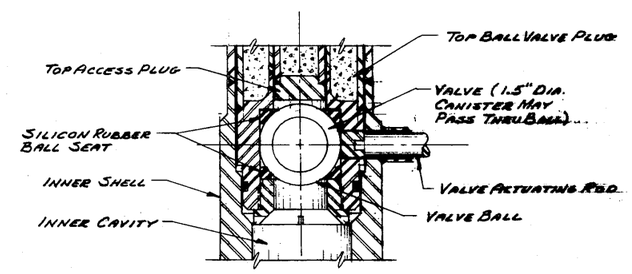

BALL VALVE DETAIL "B"
SCALE 1/2" = 1"

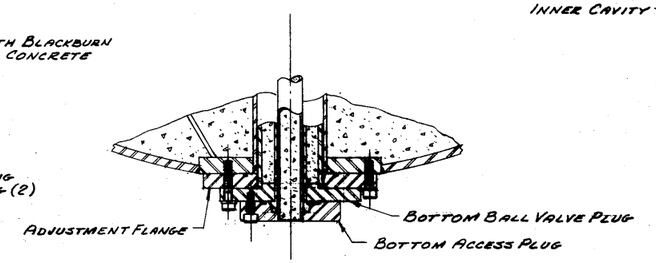

BOTTOM CLOSURE DETAIL "D"
SCALE 1/4" = 1"

NO REPRESENTATION OR WARRANTY, EXPRESSED OR IMPLIED, IS MADE THAT THE USE OR DISCLOSURE OF ANY INFORMATION, APPARATUS, METHOD OR PROCESS DISCLOSED IN THESE DRAWINGS MAY NOT INFRINGE PRIVATE RIGHTS OF OTHERS. NO LIABILITY IS ASSUMED WITH RESPECT TO THE USE OF, OR FOR DAMAGES RESULTING FROM THE USE OF, ANY INFORMATION, APPARATUS, METHOD OR PROCESS DISCLOSED IN THESE DRAWINGS. THE DRAWINGS ARE BEING MADE AVAILABLE FOR INFORMATION TO BIDDER AND ARE NOT TO BE USED FOR OTHER PURPOSES, AND ARE TO BE RETURNED UPON REQUEST OF THE FORWARDING CONTRACTOR.

TOLERANCES UNLESS OTHERWISE SPECIFIED:
FRACTIONS ± —
DECIMALS ± —
ANGLES ± —
SCALE: AS NOTED

NO.	REVISIONS	DATE	APPD	APPD
1	GENERAL REVISIONS	2-16-68	MAL	

DRAWN	DATE	SUBMITTED	DATE	APPROVED	DATE
R.P. Oliver	1-26-68				
DESIGNED	DATE	APPROVED	DATE	APPROVED	DATE
CHECKED	DATE	APPROVED	DATE	APPROVED	DATE

TRU SHIPPING CARRIER ASSEMBLY M-11250-EXFDGNB

REFERENCE DRAWINGS	NUMBER

OAK RIDGE NATIONAL LABORATORY
OPERATED BY
UNION CARBIDE CORPORATION
OAK RIDGE, TENNESSEE

TRU SHIPPING CARRIER — BLDG. NO. 7920

TRU-10.TON CALIFORNIUM SHIPPING CONTAINER

PREPARED	ACCEPTED	APPROVED
R.P. Oliver	L.B. Stuppert	Wm. E. Unger

M 12166 CD 019 D

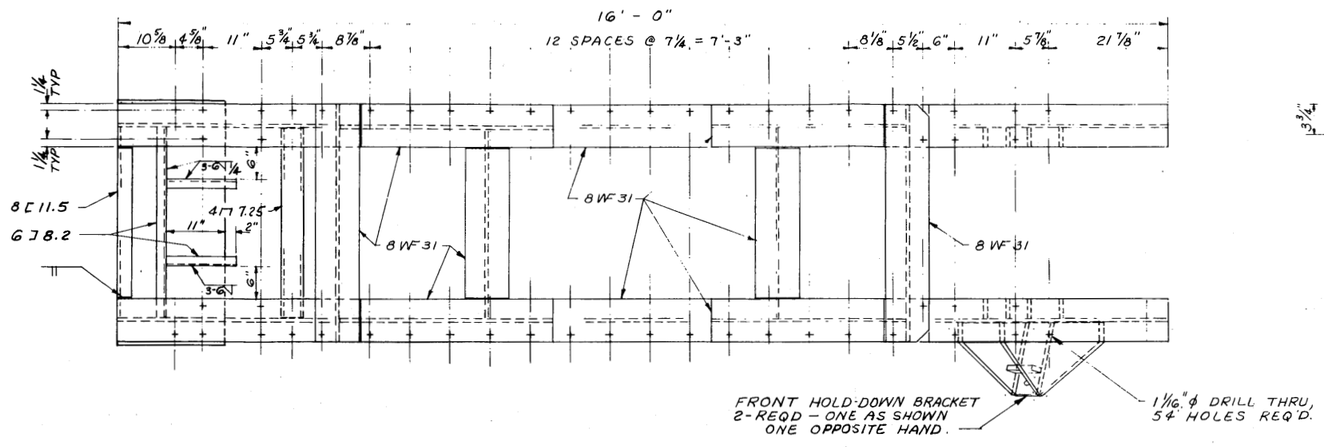

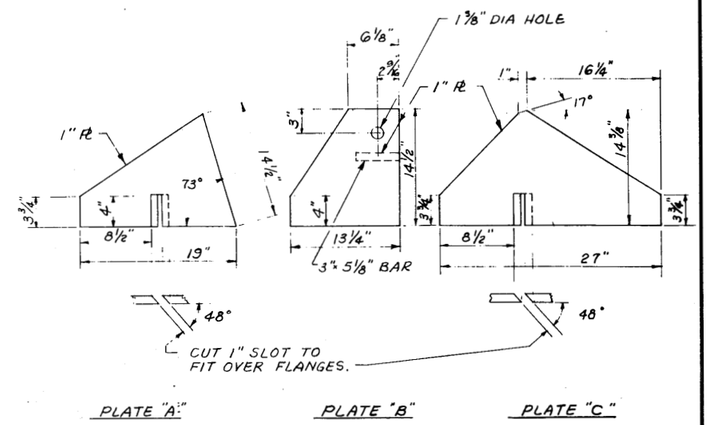

FRONT HOLD-DOWN BRACKET DETAILS
SCALE: 1½" = 1'-0"
NOTE: ONE BRACKET AS SHOWN
ONE BRACKET OPPOSITE HAND.

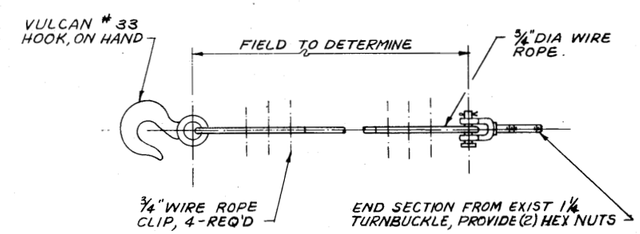

HOLD-DOWN CABLE DET
SCALE: 1" = 1'-0"

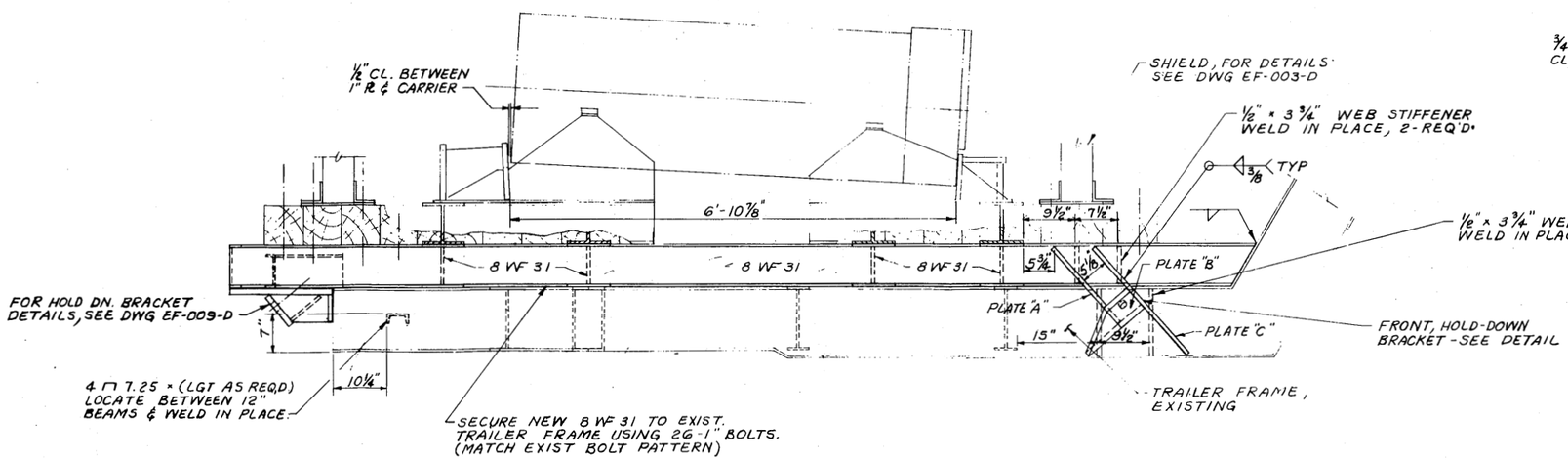

WELDING NOTES:

1. WELD IN ACCORDANCE WITH AWS WELDING SYMBOLS.
2. VISUALLY INSPECT AFTER WELDING. REPAIR DEFECTS.

NO REPRESENTATION OR WARRANTY, EXPRESSED OR IMPLIED, IS MADE THAT THE USE OR DISCLOSURE OF ANY INFORMATION, APPARATUS, METHOD OR PROCESS DISCLOSED IN THESE DRAWINGS MAY NOT INFRINGE PRIVATE RIGHTS OF OTHERS. NO LIABILITY IS ASSUMED WITH RESPECT TO THE USE OF, OR FOR DAMAGES RESULTING FROM THE USE OF, ANY INFORMATION, APPARATUS, METHOD OR PROCESS DISCLOSED IN THESE DRAWINGS. THE DRAWINGS ARE BEING MADE AVAILABLE FOR INFORMATION TO BIDDER AND ARE NOT TO BE USED FOR OTHER PURPOSES, AND ARE TO BE RETURNED UPON REQUEST OF THE FORWARDING CONTRACTOR.

TOLERANCES UNLESS OTHERWISE SPECIFIED:
FRACTIONS ± ____
DECIMALS ± ____
ANGLES ± ____
SCALE:

NO.	REVISIONS	DATE	APPD	APPD

DRAWN	LAWLESS	DATE 10/5/65	SUBMITTED	DATE	APPROVED	DATE	
DESIGNED	CHILD	DATE 10-65	APPROVED	DATE	APPROVED	DATE	
CHECKED	G. CHILD	DATE 10-8-65	APPROVED	DATE	APPROVED	DATE	

REFERENCE DRAWINGS | NO.

OAK RIDGE NATIONAL LABORATORY
OPERATED BY
UNION CARBIDE CORPORATION
OAK RIDGE, TENNESSEE

TRU MODIFICATION – CARRIER & SHIELDING | BLDG NO.

TRAILER FRAME MODIFICATION

SUBMITTED: W E Winsche, J B Pruitt RCO | ACCEPTED: W J McWaffee | APPROVED: J H Kalkhan

S-11147 EF 006 D REV.

UNITED STATES
ATOMIC ENERGY COMMISSION
OAK RIDGE OPERATIONS
P.O. BOX E
OAK RIDGE, TENNESSEE 37830

AREA CODE 615
TELEPHONE 483-8611

July 3, 1974

Union Carbide Corporation
Nuclear Division
Attn: Dr. Herman Postma, Director
Oak Ridge National Laboratory
Post Office Box X
Oak Ridge, Tennessee 37830

INTERIM CERTIFICATE OF COMPLIANCE AEC-OR USA/5740/BL

Gentlemen:

Enclosed are two (2) copies of the subject certificate (Form AEC-618) which replaces DOT Special Permit 5740.

The interim certificate issued in accordance with Section D of AECIAD 5201-1 will remain in effect pending final approval. Please arrange to:

1) Remark each package with the prescribed identification symbol and number (Part 1a, Form AEC-618).

2) Prepare a Safety Analysis Report for the packaging in accordance with the requirements set forth in AECIAD 5201-3 for review and issuance of the final approval by OR.

By copy of this letter, copies of the certificate are being forwarded to registered users.

Sincerely,

RLE

for Joseph A. Lenhard, Director
Research & Technical Support Division

AUT:LGB

Enclosure:
AEC-OR USA/5740/BL

cc: SRO, w/encl.
CHO, w/encl.
ALO, w/encl.
IDO, w/encl.
RLO, w/encl.
SFO, w/encl.
R. F. Hibbs, w/o encl.
J. H. Hill, w/o encl.

bcc: W. E. Terry, ORNL, w/encl.

9.2 Appendix B — Approval Documents

This appendix includes copies of the following:

	Page
Letter from J. A. Lenhard to Dr. Herman Postma, dated July 3, 1974	72
Interim Certificate of Compliance AEC-OR USA/5740/BL, Rev. 0 dated June 28, 1973	73
Nuclear Safety Review ORNL Criticality Committee NSR No. 750, dated Octover 25, 1974; expires November 1979	74
Letter of Approval of SARP by the ORNL Transportation Committee dated April 11, 1975	76

INTERIM

Form AEC-618
(9-72)
AECM 5201

U.S. ATOMIC ENERGY COMMISSION

CERTIFICATE OF COMPLIANCE

For Radioactive Materials Packages

1a. Number	1b. Revision No.	1c. Page No.	1d. Total No. Pages
AEC-OR USA/5740/BL	0	1	1

2. Authority

This certificate is issued pursuant to Sections 173.394, 173.395, and 173.396 of the Department of Transportation Hazardous Materials Regulations as amended (49 CFR 170-189 and 14 CFR 103), and AEC Manual Chapters 5201 and 0529.

3. CONDITIONS

3a. This certificate is issued on the basis of SAFETY ANALYSIS REPORT FOR PACKAGING (SARP)

(1) Prepared by Oak Ridge National Laboratory
P. O. Box X
Oak Ridge, Tennessee 37830

(2) Number

(3) Date Published

3b. The packaging described in the SARP and further described in item 4 below, when constructed and assembled as prescribed in the SARP, with the contents as authorized herein, meets the standards prescribed in DOT regulations.

3c. The outside of each package must be plainly and durably marked with the letters and number shown in item 1a. on this form in accordance with the standards for markings in paragraph 173.24(b) of 49 CFR 173.

3d. This certificate does not relieve the consignor from compliance with any requirements of the regulations of the U.S. Department of Transportation or other applicable regulatory agencies.

3e. Each user of packages approved under this certificate shall register his name and address with the issuing office.

4. Description of Packaging and Authorized Contents, Restrictions, and References:

a. The packaging consists of a 66" diameter spherical cask weldment with a 1/2" thick stainless steel outer shell and a 1" steel inner shell with the intervening cavity filled with a 32" thickness of Blackburn Limonite Concrete. The contents shall be contained within a DOT Specification 2R container of stainless steel, or other materials of equivalent physical strength and fire resistance. The inner cavity dimensions are 3" diameter by 6" long. The cask weight is 11-3/4 tons. The package is identified as the TRU Ten Ton Californium Shipping Container, Model ORNL 10-S-21-211, and is described on ORNL Drawing Numbers M-12166-CD-019-D-1, 67-9815R2, and M-11230-EN-017-D-1.

b. The contents of each package consist of large quantities of group I radionuclides in normal form, including any radioisotope of americium, curium, berkelium, californium, einsteinium, or fermium as a solid metal, oxide, or dried chloride or nitrate salt. The maximum quantity of any of the above radionuclides shall be 50 grams, except for the following, which are limited to 10 grams (combined)per container: americium-242, curium-245, curium-247, californium-249, and californium-251.

TO BE COMPLETED BY AEC

5a. Address (of AEC Approving Official)
U. S. Atomic Energy Commission
P. O. Box E
Oak Ridge, Tennessee 37830

5b. Signature (of AEC Approving Official)
William H. Travis

5c. Name and Title (of AEC Approving Official)
William H. Travis, Director
Safety & Environmental Control Division

6. Expiration Date (If appropriate)

7. Date JUN 26 1974

INTERIM

REQUEST FOR NUCLEAR SAFETY REVIEW

ORNL
CRITICALITY COMMITTEE

NSR 750

EXPIRATION DATE
November, 1979

This request covers operations with fissile material in a control area and/or fissile material transfers that originate within the control area. The control area supervisor shall complete the blocks below and describe the process and/or operations to be performed, emphasizing the provisions for nuclear criticality safety on the reverse side of this page. This request shall be approved by the Radiation Control Officers of the originating Division and the Division(s) to which fissile material will be transferred.

TITLE, CONTROL AREA, AND SUMMARY OF BASIC CONTROL PARAMETERS

(To be completed by the Control Area Supervisor)

TITLE (FOR REFERENCE PURPOSES)	TRU Ton-Ton Californium Shipping Container
DATE OF REQUEST	7/12/7[illegible]
DATE REVIEW REQUIRED	7/20/7[illegible]
CONTROL AREA	Not applicable
CODE NO.	[illegible]
BUILDING ROOM	
DIVISION	Chem. Tech.
TYPE AND FORM OF MATERIAL	Oxide, or salt containing primarily Cf (ORNL-TM-505)
ISOTOPIC ENRICHMENT (Wt. %)	up to 100% Cf.
QUANTITY OF FISSILE ISOTOPES — PER ISOLATED BATCH OR UNIT	Not applicable
QUANTITY OF FISSILE ISOTOPES — TOTAL IN CONTROL AREA	Not applicable
QUANTITY OF FISSILE ISOTOPES — TOTAL TO BE PROCESSED	Not applicable
Concentration or Density of Fissile Material	(see other side)
Spacing of Fissile Units	Not applicable
Proximity and Type of Neutron Reflectors or Adjacent Fissile Material	Not applicable
Limit on Moderation	Not applicable
Limit on Neutron Absorbers	Not applicable
Limit on Volume or Dimensions of Containers	Size of inner container (see ORNL-TM-505)
THIS REQUEST (MODIFIES, REPLACES) NSR(S) NO.	None

RECOMMENDATIONS

(To be completed by the Criticality Committee)

This endorsement is based on our present understanding of the operation (whether acquired verbally or in writing) and is subject to review and cancellation.

This request is approved subject to the following considerations:

1. The fissile mass limits are well below the estimated minimum critical masses of these actinide isotopes under conditions of optimal moderation and reflection.*
2. The fissile isotopes will be transported as salts, oxides, or metals, mixed, in some cases, with nonfissionable diluents. These conditions tend to further increase the minimum critical mass within this cask.
3. The massive neutron shield of the cask will preclude interaction with other fissile units

*A.H.Clark, "Critical Masses of Fissile Transplutonium Isotopes, ANS Transactions, Vol 12, No. 2 (Dec.1969)

R. G. Affel
for CHAIRMAN, CRITICALITY COMMITTEE

15-25-74
DATE

UCN-5917
(3 9-70)

PROVISIONS FOR NUCLEAR CRITICALITY SAFETY
(To be completed by the Control Area Supervisor)

Provisions for nuclear criticality safety shall be described below in accordance with Appendices II and III of the AEC Manual Chapter 0530. This shall include brief descriptions of the process and/or all operations to be performed, plans and procedures for the operations for nuclear criticality safety, and the basic control parameters. Please attach 11 copies of referenced drawings and documents.

The cask is a 6 ft. 6 in. stainless steel sphere shielded by 32 in. of Blackburn limonite concrete whose density is 175 lb/cu ft.

The inner cavity used for shipment of the material is 3 in. ID by 6 in. high and is described in ORNL-TM-3505. It is used to ship large quantities of Group I radionuclides in normal form including any radioisotope of Am, Cm, Bk, Cf, Es, and Fm as a solid metal, oxide, or dried chloride, nitrate or other salt, the maximum quantity of any of the above radionuclides limited to 3 grams.

ORNL
CRITICALITY COMMITTEE

NSR 750

EXPIRATION DATE
November, 1979

RADIATION CONTROL OFFICER	DIVISION	CONTROL AREA SUPERVISOR	BUILDING
		[illegible]	4500N
RADIATION CONTROL OFFICER	DIVISION	RADIATION CONTROL OFFICER	DIVISION
		John B Rush	CTD

INTRA-LABORATORY CORRESPONDENCE

OAK RIDGE NATIONAL LABORATORY

April 11, 1975

To: B. B. Klima
L. B. Shappert
M. C. Jurgensen

From: Transportation Committee

Subject: Approval of SARP of the ORNL TRU Californium Shipping Container

The ORNL Transportation Committee has reviewed your submission of the subject SARP to fulfill the requirements (internal review) of paragraph B of AEC Immediate Action Directive 5201-3. Particular attention was given the five areas of structural integrity, thermal resistance, radiation shielding, nuclear criticality safety, and quality assurance.

The results of the evaluation show that the container meets the requirements of AECM 0529 and the SARP is approved for submission to the ERDA for request of a Certificate of Compliance for approval of the cask for use for offsite shipments of fissile and radioactive materials.

E. M. King

E. M. King, Chairman
Transportation Committee

EMK:bb

cc: Transportation Committee

9.3 Computer Program for 30-ft Drop onto the Top and Bottom of the TRU Californium Shipping Container - Program 1014 Cask Derivation of Equations

The model shown in Fig. 9.1 illustrates the general case of a cask equipped with an energy absorber which deforms in pure compression. If the force-deformation curve for the absorber is taken as shown in Fig. 9.2, the expression

$$\Delta U_n = F_n(X_n - X_{n+1}) = F_n\delta_n \tag{9.1}$$

represents the energy expended as the cask moves from X_o to X_n and deforms the absorber an amount δ_n. It follows that

$$U_n = \sum_{n=0}^{n'=n} \Delta U = \sum_{n=0}^{n} \quad . \tag{9.2}$$

The summation may be simplified by taking δ constant and satisfying the expression,

$$N\delta = X_n. \tag{9.3}$$

The deformation X_n may be written

$$X_n \doteq \epsilon_n L = N\delta. \tag{9.4}$$

Solving for ϵ_n, we have

$$\epsilon_n = N\delta/L. \tag{9.5}$$

There is an expression, $\sigma_i = f(\epsilon_i)$, where σ = stress, psig, and ϵ = strain, in./in., for the material from which the energy absorber is constructed. The force F can then be determined from the following expression:

$$F = \sigma A, \tag{9.6}$$

where

A = original cross-sectional area of the energy absorber, in.^{2}.

These relationships form the basis for the attached computer program. The absorber deformation is increased in steps of constant magnitude. Strain, stress, and force are computed for value of deformation and the energy for the step determined. The energy is added to the sum of that from previous steps and compared with the cask potential energy. When the dissipated energy equals the potential energy, the computations are complete.

The program is currently supplied with stress-strain equations,

$$\sigma = f(\epsilon), \tag{9.7}$$

for stainless steel and mild steel. The program can be used for absorbers having any cross-sectional shape. It is equipped to compute the area for tubular absorbers (see Fig. 9.3a) and for rectangular absorbers having a constant thickness (see Figs. 9.3b and 9.3c). In the case

of the tubular absorber, the radius and thickness depth must be inserted in statement numbers 70, 71, and 72. For a rectangular absorber, the thickness, depth, and length must be inserted as statement numbers 71, 72, and 73. For absorbers of other geometry, the area must be computed by hand in input in statement 74. Those statements not applicable must be left as 0.0. In addition, the cask weight in pounds must be input in statement 80, the drop material height in inches in statement 81, and the material in statement 88. The material in input is SST for 300 annealed series stainless steel and STL for mild steel. If a finer or coarser mesh is desired, the value of DE in statement 60 may be decreased or increased. The 1000 format should be altered to identify the cask.

ORNL DWG 75-82

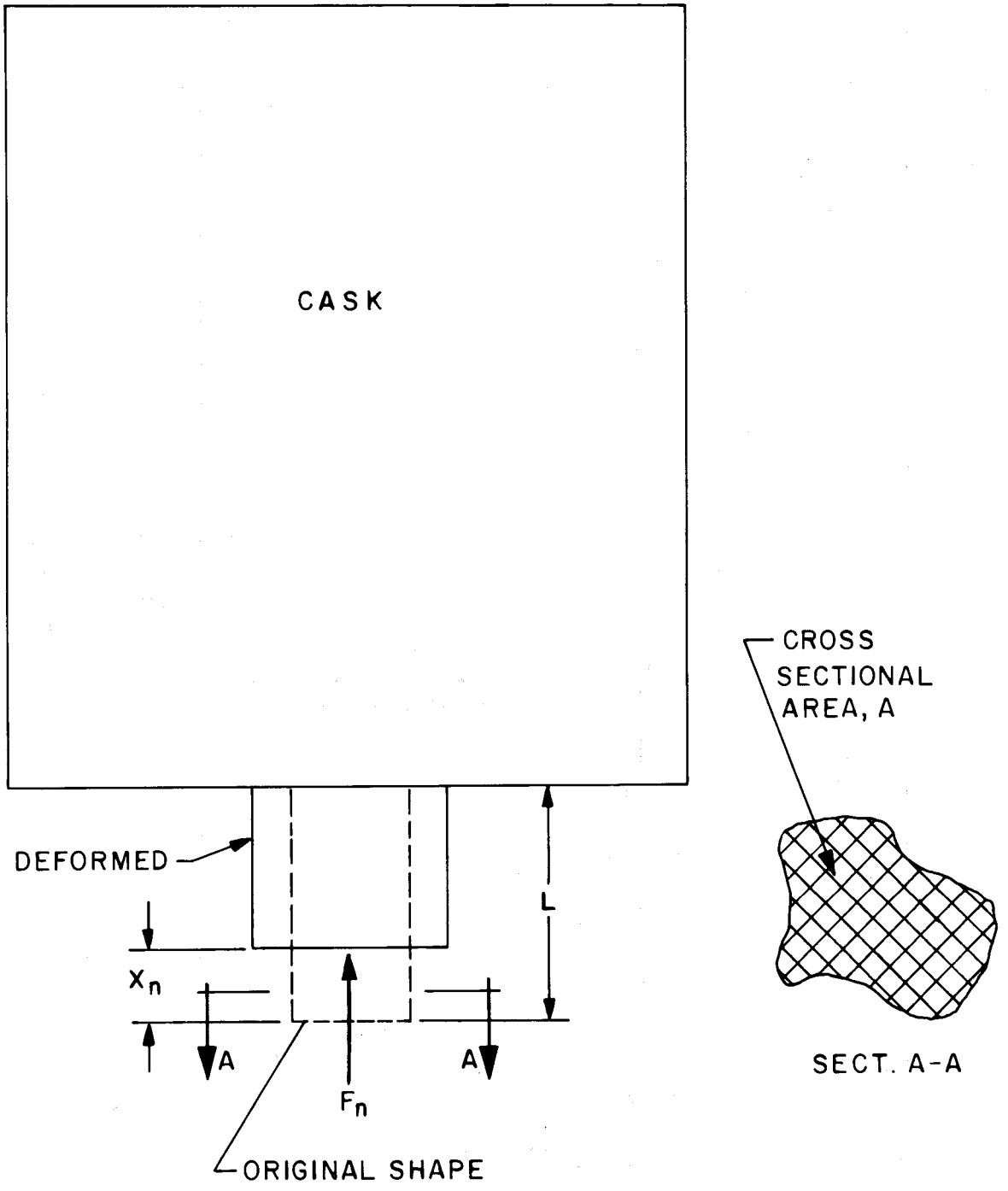

Fig. 9.1 Cask model.

ORNL DWG 75-83

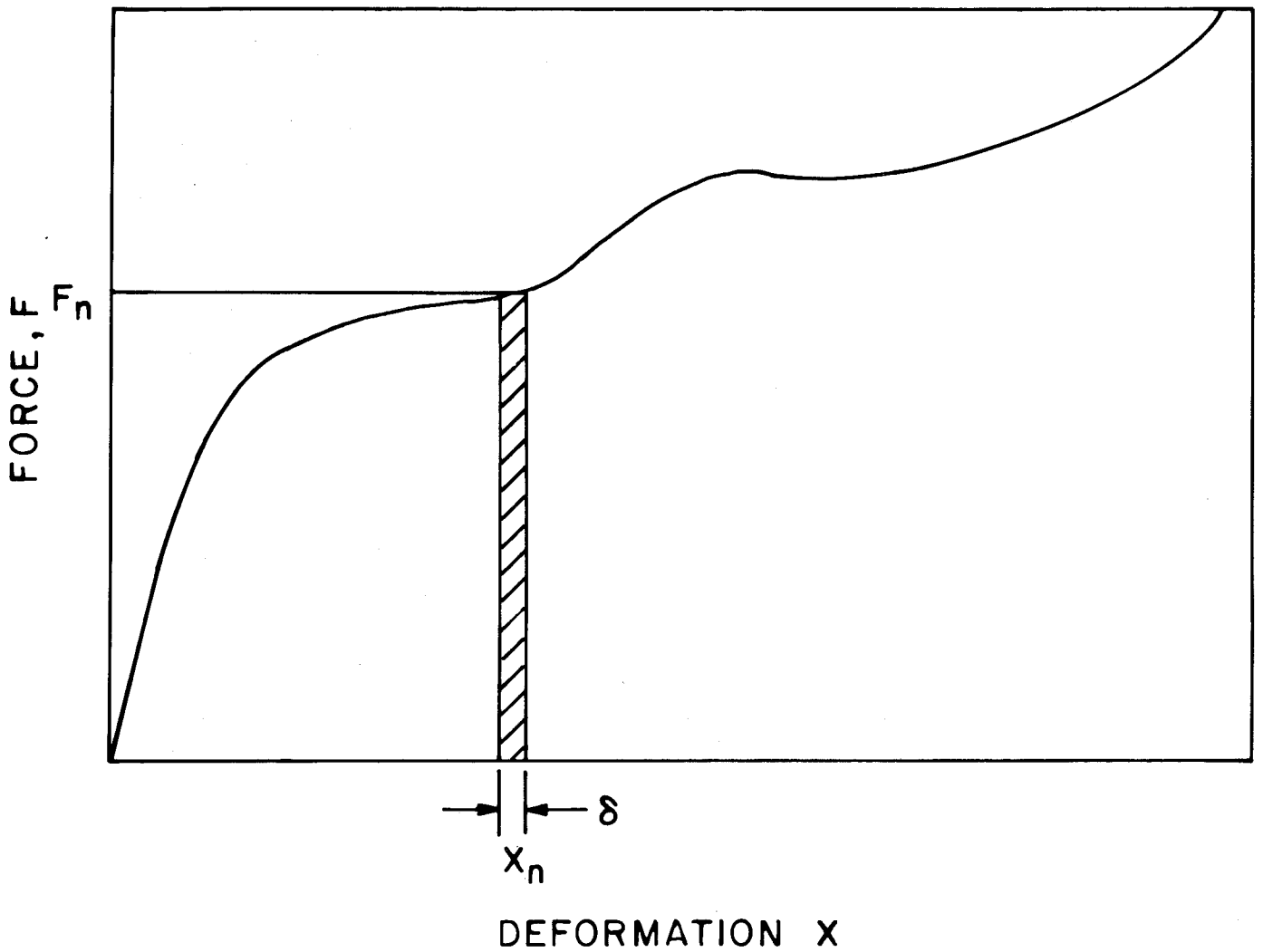

Fig. 9.2 General force deformation diagram.

ORNL DWG 75-77RI

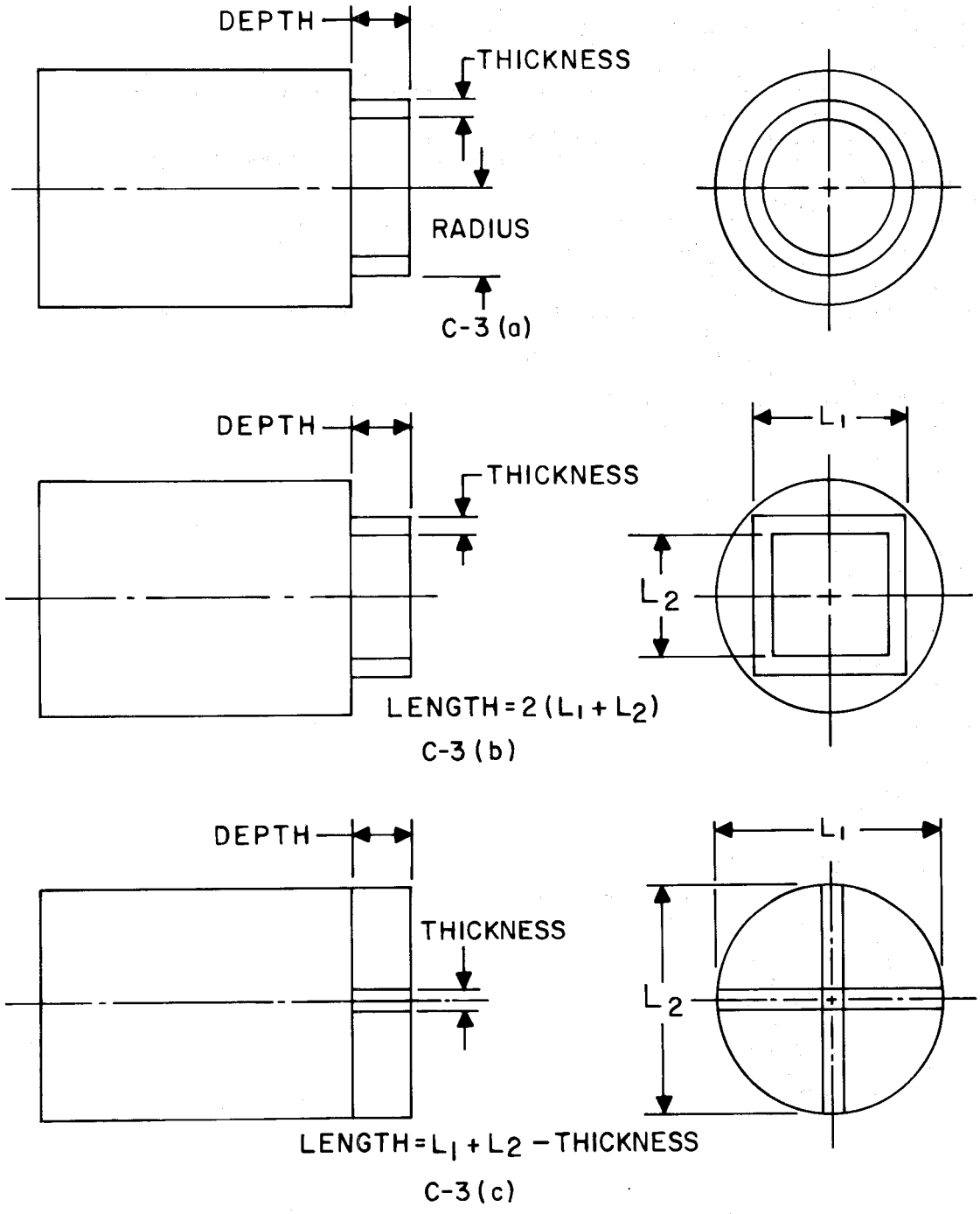

Fig. 9.3 Energy absorber configurations.

```
**FTN,L,M,E,G,A.
C                          PROGRAM 1014 CASK
C THIS PROGRAM COMPUTES THE RESPONSE OF A RIGID CASK EQUIPPED WITH AN ENERGY,
C ABSORBER WHICH DEFORMS IN PURE COMPRESSION CODED BY JOHN EVANS PE ,OAK RIDGE
C NATIONAL LABORATORY, JUNE 1974
      DIMENSION  DE(200),S(200),DEF(200),DU(200),FORC(200),ENER(200),
     2 ACC(200)
 1000 FORMAT(1H ,8X,'O. R. N. L. 10 TON SHIPPING CASK')
 1001 FORMAT (1H0)
 1002 FORMAT(1H ,1X,49H*************************************************,
     1       55H*********************************************************,
     2       14H**************)
 1003 FORMAT(1H ,23X,24HENERGY ABSORBER GEOMETRY)
 1004 FORMAT(1H ,12X,6HRADIUS,3X,9HTHICKNESS,3X,5HDEPTH,4X,6HLENGTH,5X,
     1    4HAREA)
 1005 FORMAT(1H ,F18.3,4F10.3)
 1006 FORMAT (1H ,16X,33HCASK GEOMETRY AND TEST CONDITIONS)
 1007 FORMAT(1H ,12X,11HCASK WEIGHT,3X,11HDROP HEIGHT,3X,9HPOTENTIAL,
     1       X, 6HENERGY)
 1008 FORMAT(1H ,F21.1,F14.1,F17.1)
 1009 FORMAT (1H , 1X,12HACCELERATION,2X,11HDEFORMATION,6X 5HFORCE,6X,
     1    6HSTRESS,6X,6HSTRAIN,8X,6HENERGY)
 1010 FORMAT (1H , 5X,3HX G,10X,6HINCHES, 9X,4HLBS.,7X,4HPSI., 9X,
     1    5HIN/IN,9X,5HLB-IN)
 1011 FORMAT (1H ,F10.1,F13.3,F16.1,F12.1,F11.3,F12.1)
      DO 7, I=1,200
      DE(I)=0.0
      S(I)=0.0
      DEF(I)=0.0
      DU(I)=0.0
      FORC(I)=0.0
      ENER(I)=0.0
    7 ACC(I)=0.0
      SST=1.0
      STL=2.0
      ALUM=3.0
   60 EE=.005
      DS=0.0
   88 AMATL=SST
   70 RAD=8.375
   73 TLEN=0.0
   74 AREA=0.0
   72 DEPH=4.
   71 THK=1.25
   80 WT=23200.
      DL=EE*DEPH
      PHI=3.14159265
      IF(RAD .GT. 0.) AREA=2.*RAD*PHI*THK
      IF(TLEN .GT. 0.) AREA=TLEN*THK
      IF(AMATL.NE.2.0) GO TO 6
C   MILD STEEL COEFFICIENTS
      A=-4.36337724E+02
      B=3.52674012E+06
      C=-5.84344912E+07
      D=8.44752080E+08
      E=-1.00790838E+10
      F=8.32241264E+10
```

```
      G=-4.42875864E+11
      H=1.50685484E+12
      O=-3.25535392E+12
      P=4.31754272E+12
      Q=-3.20487884E+12
      R=1.01910658E+12
      AA=0.5
      AB=345000.
      AC=73000.
    6 CONTINUE
      IF(AMATL.NE.1.0) GO TO 5
C   STAINLESS STEEL COEFICIENTS
      A=-6.60046824E+02
      B=3.27884020E+06
      C=-1.74360076E+08
      D=5.78280072E+09
      E=-9.29116096E+10
      F=8.46509048E+11
      G=-4.79173280E+12
      H=1.75760146E+13
      O=-4.20115552E+13
      P=6.33579656E+13
      Q=-5.48432768E+13
      R=2.07901540E+13
      AA=0.35
      AB=642000.
      AC=50300.
    5 CONTINUE
      IF(AMATL.NE.3.0) GO TO 12
      A=-2.37529992E+02
      B=8.77222216E+05
      C=-2.10395908E+07
      D=7.92526976E+08
      E=-1.19710816E+10
      F=9.28522728E+10
      G=-4.24976496E+11
      H=1.21919694E+12
      O=-2.22403424E+12
      P=2.51118460E+12
      Q=-1.60332062E+12
      R=4.43286884E+11
      AA=0.5
      AB=209100.
      AC=27900.
   12 CONTINUE
      DO 20 N=1,2
      HT=24.0
      IF(N .EQ. 2) HT=360.
      UT=WT*HT
      SUMU=0.0
      DS=0.
      DO 1 I=1,200
      DE(I)=DS
      DEF(I)=DE(I)*DEPH
      IF(DS.GT.AA) GO TO 21
      S(I)=A+(B*DS)+(C*DS*DS)+(D*(DS**3.))+(E*(DS**4.))+(F*(DS**5.))+
     1 (G*(DS**6.))+(H*(DS**7.))+(O*(DS**8.))+(P*(DS**9.))+
```

```
  2 (Q*(DS**10.))+(R*(DS**11.))
21 CONTINUE
   IF(DS.LE.AA) GO TO 22
   STRS=(AB*DS)+AC
22 CONTINUE
   FORC(I)=S(I)*AREA
   ACC(I)=FORC(I)/WT
   DU(I)=FORC(I)*DL
   SUMU=SUMU+DU(I)
   ENER(I)=SUMU
   DS=DS+EE
   IF(ENER(I).GE.UT) GO TO 2
 1 CONTINUE
 2 CONTINUE
   J=I
   WRITE (6,1002)
   WRITE (6,1002)
   WRITE (6,1001)
   WRITE (6,1000)
   WRITE (6,1001)
   WRITE (6,1002)
   WRITE (6,1002)
   WRITE (6,1001)
   WRITE  (6,1003)
   WRITE (6,1001)
   WRITE (6,1004)
   WRITE (6,1001)
   WRITE(6,1005),RAD,THK,DEPH,TLEN,AREA
   WRITE (6,1001)
   WRITE (6,1002)
   WRITE (6,1001)
   WRITE (6,1006)
   WRITE (6,1001)
   WRITE (6,1007)
   WRITE (6,1001)
   WRITE (6,1008)WT,HT,UT
   WRITE (6,1001)
   WRITE (6,1002)
   WRITE (6,1002)
   WRITE (6,1001)
   WRITE (6,1009)
   WRITE (6,1001)
   WRITE (6,1010)
   WRITE (6,1001)
   DO 10 I=1,200
   WRITE(6,1011),ACC(I),DEF(I),FORC(I),S(I),DE(I),ENER(I)
   IF(I.GE.J) GO TO 11
10 CONTINUE
11 CONTINUE
   WRITE (6,1001)
   WRITE (6,1001)
   WRITE (6,1002)
   WRITE (6,1002)
   WRITE (6,1002)
   WRITE (6,1002)
   WRITE (6,1002)
   WRITE (6,1002)
```

```
      WRITE (6,1001)
      WRITE (6,1001)
      CALL QWIKPL(DEF,ACC,J,'LINEAR','J.H.EVANS$')
      CALL QWIKPL(DEF,ENER,J,'LINEAR','J.H.EVANS$')
      CALL QWIKPL(ACC,ENER,J,'LINEAR','J.H.EVANS$')
   20 CONTINUE
      STOP
      END
```

9.4 Typical Operating and Inspection Procedures for TRU Californium Shipping Container

Form TRU-5740-1

SHIPMENT PREPARATION SUMMARY

AEC-OR USA/5740/BL

DATE: _____ TRU SHIPMENT No.: _____

The following elements of shipment preparation have been properly completed, copies of the indicated forms are attached.

_____ Loading Procedure (TRU-5740-)

_____ Trailer Inspection Report (TRU-5740-)

_____ Inspection Engineering Department Review

_____ Final H.P. Survey at TRU

_____ Form UCN-TX-4623 Prepared

FORM TRU-5740-5

Page 1 of 2

TRU CALIFORNIUM SHIPPING CONTAINER

UNLOADING PROCEDURE

INCOMING SHIPMENTS

MULTIPLE BASKET ITEMS OR
SINGLE SHIPMENT ITEMS

AEC-OR USA/5740/BL

Date: _____

Material Received: _____

No. Packages: _____

Type Packages: _____

Shipper: _____

Radiation Data: H.P. Representative: _____

	Contact	6 ft
Gamma, mrem/hr	_____	_____
Neutrons, mrem/hr	_____	_____
Total, mrem/hr	_____	_____
Contamination	_____	dpm, alpha
	_____	dpm, beta-gamma

	Date	By	
1.	_____	_____	Carrier moved from trailer into Bldg. 7920.

Items 2 through 13 require H.P. surveillance.

2.	_____	_____	Remove top cover plate.
3.	_____	_____	Remove bolts from top valve actuator rod assy. Pull assy. out 1 inch.
4.	_____	_____	Remove top plug — top loading port shield remains attached to top plug.

	Date	By	
5.	_____	_____	Complete pre-move check on TDF: A. Air, water, power disconnected: _____ B. Transfer line disconnected: _____ C. Slug chute closed - handle removed: _____ D. Valve in TDF closed: _____
6.	_____	_____	Move TDF to station above carrier.
7.	_____	_____	Open valve in bottom of TDF.
8.	_____	_____	Lower proper tool from TDF into carrier — engage basket or single item and lift into TDF.
9.	_____	_____	Close bottom valve on TDF.
10.	_____	_____	Move TDF back to upper station.
11.	_____	_____	H.P. survey carrier to determine that carrier is empty.
12.	_____	_____	Clean all carrier parts. Store in plastic bags.

13. Contamination levels after cleaning — dpm alpha

Top plug: _____

Carrier internals: _____

Spacers: _____

14.	_____	_____	Remove old shipping labels from carrier.
15.	_____	_____	Cover open top of carrier with plastic or blotter paper.
16.	_____	_____	Reinstall top valve actuator rod assy. and tighten bolts.

FORM TRU-5740-7
Page 1 of 3

MULTIPLE SHIPMENT LOADING PROCEDURE

TRU CALIFORNIUM CONTAINER

AEC-OR USA/5740/BL

Date: _____

Material to be Shipped: _____

TRU Shipment No.: _____

Number of Packages: _____

Type Packages: _____

	Date	By	
1.	_____	_____	Contamination levels after cleaning carrier components.

	dpm, alpha
Top loading port shield	_____
Top plug	_____
Basket	_____
Carrier internals	_____

2.	_____	_____	Transfer multiple shipping basket to decontamination facility (TDF).
3.	_____	_____	Load and record package positions:

		dpm alpha smear
Position No. 1	_____	_____
Position No. 2	_____	_____
Position No. 3	_____	_____
Position No. 4	_____	_____
Position No. 5	_____	_____

4.	_____	_____	Disconnect air, water, power, and transfer line from TDF.
5.	_____	_____	Check that valve in slug chute is closed.

	Date	By	
6.	_____	_____	Remove handle from slug chute valve.
7.	_____	_____	Check that valve in bottom of TDF is closed.
8.	_____	_____	Have riggers move TDF to load-out station.
9.	_____	_____	Open valve in bottom of TDF.
10.	_____	_____	With H.P. surveillance, lower loaded basket into carrier cavity.
11.	_____	_____	Move TDF back to Cell 1 position.
12.	_____	_____	Check condition of sealing surfaces and O-ring on top inner plug.
13.	_____	_____	Put top inner plug into carrier, being certain to orient shaft to engage basket.
14.	_____	_____	Torque top inner plug bolts to 100 in. lbs.
15.	_____	_____	Check sealing surfaces and O-ring on top loading port shielding plug.
16.	_____	_____	Install top loading port shield plug.
17.	_____	_____	Torque top loading port shield plug bolts to 80 in. lbs.
18.	_____	_____	Check condition of surfaces and gasket on outer cover plate. Comments: _____
19.	_____	_____	Install outer cover plate with lock washers in place. Torque bolts to 100 in. lb.
20.	_____	_____	1. General condition of carrier: _____ 2. Old shipping labels removed: _____

21. Radiation Data — Obtain and Record — H.P. Representative: _____

	Contact	6 ft	Driver
Gamma, mrem/hr	_____	_____	_____
Neutrons, n_i, mrem/hr	_____	_____	_____
n_f, mrem/hr	_____	_____	_____
Total, mrem/hr	_____	_____	_____
Contamination	_____	dpm, alpha	
	_____	dpm, beta-gamma	

	Date	By	
22.	_____	_____	Shipping letter included: _____ 1. Inside carrier top cover: _____ 2. Inside trailer tool box: _____
23.	_____	_____	Carrier moved to trailer.
24.	_____	_____	Install anchor bolts.
25.	_____	_____	Install anchor bolt safety wires.
26.	_____	_____	Install cables.
27.	_____	_____	H.P. transfer tag attached to carrier.

28. Trailer tool box check list:
    1. Source lifting tool: _____
    2. Index plate: _____
    3. Tool box locked: _____

FORM TRU-5740-8
Page 1 of 2

TRU TEN-TON CALIFORNIUM SHIPPING CONTAINER
BIENNIAL INSPECTION CHECK LIST

CONTAINER

1. Inspection of Welds (Visual):

Welds on spherical body: _____

Welds on top fins: _____

Welds on bottom fins: _____

Baseplate welds: _____

Welds needing more inspection: _____

_____

2. Fusible Plugs:

Top cover plate: _____

Bottom cover plate: _____

Concrete pour opening: _____

3. Pressure Check:

_____ Remove top cover plate.

_____ Remove bottom cover plate.

_____ Check that bolts on top inner plug are torqued to 100 in. lbs.

_____ Check that bolts on bottom inner plug are torqued to 100 in. lbs.

_____ Connect 15 psig air supply, gage, and exhaust valve and filter assembly to quick disconnects in top.

_____ Apply 15 psig pressure to cavity and close inlet valve.

_____ After 30 min observe pressure: _____ psig.

_____ If pressure has dropped, check test equipment for leaks using soap solution.

If test equipment is o.k., check top and bottom O-ring seals.

Top: _____ o.k., _____ leak

Bottom: _____ o.k., _____ leak

_____ Release air pressure from system.

_____ Obtain H.P. assistance.

_____ Remove top and/or bottom inner plug.

_____ Inspect O-ring and sealing surfaces. Comments: _____

_____

_____

After making needed repairs, obtain another copy of this form and repeat pressure test.

OAK RIDGE NATIONAL LABORATORY RADIOACTIVE MATERIALS PACKAGING INFORMATION

THIS FORM IS REQUIRED FOR ALL SHIPMENTS GREATER THAN 1 MILLICURIE ALPHA OR 5 CURIES BETA-GAMMA SOLID, LIQUID, OR GAS AND ALL EMPTY RETURNABLE CONTAINERS

General Information

1. Origin (Division _____ 2. Destination _____
3. Method of Transport _____ 4. Weight _____
5. Special Instructions _____
_____ Special Instructions Complied by _____

Radioactive Contents

1. All major activities in curies and/or grams _____
_____
2. Specify (a) Normal Form ☐ (b) Special Form ☐ Special Form No. _____
(c) Fissile ☐ (d) Non-Fissile ☐
3. Radioactive Material Form: Solid ☐ Liquid ☐ Gas ☐
4. Heat Load (watts): Calculated _____ Estimated _____ By _____

Shipping Container

1. AEC Certificate of Compliance No. AEC-OR-USA _____
2. DOT Specification No. _____ 3. Nuclear Safety Review No. _____
4. Container determined proper for contents by _____ Date _____

Internal Container

1. Internal Containment: Glass Bottle ☐ Plastic Bottle ☐ "2R" ☐ Conoseal ☐
Welded Capsule (specify capsule material) ☐ _____
Other (explain) ☐ _____
2. Contamination level on internal container: Estimated _____ Smeared _____
3. Radiation level from internal container: Measured _____ Calculated _____
4. Gaskets or seals (valves) properly installed _____ By _____
5. Leak tests of internal container _____ By _____

External Container

1. Moderator and neutron absorber present for fissile material? Yes ☐ ☐ By _____
2. External container examination _____ Yes ☐ ☐ By _____
3. Gaskets or seals properly installed _____ Yes ☐ ☐ By _____
4. Leak test _____ Yes ☐ ☐ By _____
5. Bolts torqued to _____ ft lbs By _____
6. Tie down to skid checked _____ Yes ☐ By _____
7. Tamper seal installed _____ Yes ☐ ☐ By _____
8. Lid eye bolt removed and wired to the outside of the carrier Yes ☐ By _____

Radiation Survey

1. Surface contamination level: Alpha _____ dpm, β-γ _____ dpm
2. External radiation level _____ mrem/hr @ contact
3. Domestic shipments _____ mrem/hr @ 3 ft from surface
4. Foreign shipments _____ mrem/hr @ 1 meter from center
5. Health Physics Surveyor _____ Date _____

Truck Tie-Down and Shoring

1. Tie-down and shoring checked by (Inspection Engineering) _____

Shipment Approved By _____

Date _____

TX-4623 (Revised 9/74)

10. REFERENCES

1. B. B. Klima and L. B. Shappert, *The TRU Ten-Ton Californium Shipping Container*, ORNL-3505 (November 1971).

2. *Code of Federal Regulations*, Title 10, Part 71.

3. *AEC Manual*, Chapeter 0529 (June 14, 1973).

4. *Code of Federal Regulations*, Title 49, Part 173.

5. *Code of Federal Regulations*, Title 49, Part 173, paragraph 173.389(b).

6. *Code of Federal Regulations*, Title 49, Part 173, paragraph 173.393(j).

7. F. B. Seely, *Resistance of Materials*, 3rd ed., p. 63, Wiley, New York, 1947.

8. R. J. Roark, *Formulas for Stress and Strain*, 4th ed., p. 164, McGraw-Hill, New York, 1965.

9. J. H. Evans, *Structural Analysis of Shipping Casks, Vol. 7: Cask Tie Down Manual*, ORNL/TM-1312, Vol. 7 (May 1969).

10. E. Oberg and F. D. Jones, *Machinery's Handbook*, 16th ed., p. 1110, The Industrial Press, New York, 1959.

11. *ASME Boiler and Presure Vessel Code*, Sect. VIII, "Rules for Construction of Pressure Vessels, "Division I, American Society of Mechanical Engineers, New York, 1974.

12. *1960 SAE Handbook*, Table 1, p. 105, Society of Automotive Engineers, New York, 1960.

13. W. D. Turner and M. Siman-Trov, *HEATING-3, An IBM 360 Heat Conduction* Program, ORNL/TM-3208 (February 1971).

14. *Code of Federal Regulations*, Title 49, Part 173, paragraph 173.393(e)(2).

15. S. Timoshenko, *Strength of Materials* - Part II, p. 124, Van Nostrand, New York, 1956.

16. S. G. Pearsall, S. Majeski, and L. Gemmell, "Design and Testing of a Shipping Container for Large Quantities of Radioactive Waste," pp. 634-36 in *Proceedings of the Second International Symposium on Packaging and Transportation of Radioactive Materials*, CONF-681001 (1968).

17. J. H. Evans, *Design and Analysis of the New Brunswick Laboratoey High-Level Waste*

Cask, ORNL/TM-4242 (June 1973), Appendix D.

18. *Code of Federal Regulations*, Title 10, Part 71, Appendix D.

19. Agent R. M. Grazianos' Tariff No. 29 *Hazardous Materials Regulations of the Department of Transportation Including Specifications for Shipping Containers* (issued Dec. 15, 1974; effective Jan. 14, 1975), paragraph 178.34.

20. E. D. Clayton, "The Nature of Fission and the Criticality Process (from Protactinium to Californium and Beyond), "*Proceedings of Short Course on Nuclear Criticality Safety, Taos, New Mexico, May 7-11, 1973*, USAEC TID-26286 (1974), p.1.

ORNL-TM-5409
Dist. Category UC-71

INTERNAL DISTRIBUTION

1. E. E. Beauchamp
2-6. W. D. Box
7-12. J. E. Bigelow
13. R. E. Brooksbank
14. K. B. Brown
15. K. K. Chipley
16. H. C. Claiborne
17. R. L. Clark
18. E. D. Collins
19. W. K. Crowley
20. J. H. Evans
21. D. E. Ferguson
22. J. D. Flynn
23. E. M. King
24. L. J. Ling
25. B. B. Klima
26. A. P. Malinauskas
27. G. E. Moore
28. J. G. Morgan
29. F. H. Neill
30. H. Postma
31. J. N. Robinson
32. J. B. Ruch
33. R. W. Schaich
34-38. R. D. Seagren
39. L. B. Shappert
40. W. E. Terry
41. D. B. Trauger
42. V. C. A. Vaughen
43. J. W. Wachter
44. C. D. Watson
45. L. C. Williams
46. L. V. Wilson
47. R. G. Wymer
48-49. Central Research Library
50. Document Reference Library
51-63. Laboratory Records Department
64. Laboratory Records, ORNL RC
65. ORNL Patent Office
66. G. R. Chopin (Consultant)
67. E. L. Gaden, Jr. (Consultant)
68. C. H. Ice (Consultant)
69. L. E. Swabb (Consultant)
70. K. D. Timmerhaus (Consultant)

EXTERNAL DISTRIBUTION

71. W. A. Brobst, US DOE, Division of Waste Management and Transportation, Washington, D.C. 20545

72. C. L. Brown, Pacific Northwest Laboratory, Post Office Box 999, Richland, Washington 99352

73. R. L. Chandler, US DOE, Savannah River Operations Office, Post Office Box A, Aiken, South Carolina 29801

74. D. C. Davis, US DOE, Oak Ridge Operations Office, Post Office Box E, Oak Ridge, Tennessee 37830

75. K. E. Elliott, US DOE, Albuquerque Operations Office, P. O. Box 54, Albuquerque, New Mexico 87115

76. A. W. Grella, U.S. Department of Transportation, 6th and D Street SW, Washington, D.C. 20590

77. P. G. Holsted, US DOE, Richland Operations Office, P. O. Box 550, Richland, Washington 99352

78. D. A. Hoover, Atlantic Richfield Hanford Company, Richland, Washington 99352

79. J. A. Lamb, US DOE, Oak Ridge Operations Office, P. O. Box E, Oak Ridge, Tennessee 37830

80. J. W. Langhaar, E. I. DuPont de Nemours & Company, Wilmington, Delaware 19898

81. Larry Laude, Bettic Atomic Power Laboratory, P. O. Box 79, West Mifflin, Pennsylvania 15122

82. W. C. McCluggage, US DOE, Division of Operational Safety, Washington, D.C. 20545

83. C. E. Oddis, Pittsburgh Naval Reactor Office, P. O. Box 109, West Mifflin, Pennsylvania 15122

84. W. A. Pryor, US DOE, Oak Ridge Operations Office, Post Office Box E, Oak Ridge, Tennessee 37830

85. J. A. Sisler, US DOE, Division of Waste Management and Transportation, Washington, D.C. 20545

86. D. R. Smith, Los Alamos Scientific Laboratory, Post Office Box 1663, Los Alamos, New Mexico 87544

87-99. Safety and Environmental Control Division, US DOE, Oak Ridge Operations Office, Post Office Box E, Oak Ridge, Tennessee 37830

100. Director, Research and Technical Support Division, US DOE, Oak Ridge Operations Office, Post Office Box E. Oak Ridge, Tennessee 37830

101-263. Given distribution as shown in TID-4500 under category UC-71 — Transportation of Property and Nuclear Materials (25 copies — NTIS)