OAK RIDGE NATIONAL LABORATORY LIBRARIES

3 4456 0551554 6

ORNL/TM-6581

Design and Operation of Equipment Used to Develop Remote Coating Capability for HTGR Fuel Particles

R. R. Suchomel
D. P. Stinton
M. K. Preston
J. L. Heck
B. J. Bolfing
W. J. Lackey

OAK RIDGE NATIONAL LABORATORY
CENTRAL RESEARCH LIBRARY
CIRCULATION SECTION
4500N ROOM 175
LIBRARY LOAN COPY
DO NOT TRANSFER TO ANOTHER PERSON
If you wish someone else to see this report, send in name with report and the library will arrange a loan.
UCN-7969 3 9-77

OAK RIDGE NATIONAL LABORATORY
OPERATED BY UNION CARBIDE CORPORATION · FOR THE DEPARTMENT OF ENERGY

Printed in the United States of America. Available from
National Technical Information Service
U.S. Department of Commerce
5285 Port Royal Road, Springfield, Virginia 22161
Price: Printed Copy $[illegible]; Microfiche $3.00

This report was prepared as an account of work sponsored by an agency of the United States Government. Neither the United States Government nor any agency thereof, nor any of their employees, contractors, subcontractors, or their employees, makes any warranty, express or implied, nor assumes any legal liability or responsibility for any third party's use or the results of such use of any information, apparatus, product or process disclosed in this report, nor is such information or use by such third party would not infringe privately owned rights.

ORNL/TM-6581
Dist. Category UC-77

Contract No. W-7405-eng-26

METALS AND CERAMICS DIVISION

HTGR Fuel Recycle Development Program (189a OH045)
Fuel Refabrication — Task 500

Commitment No. 3065

DESIGN AND OPERATION OF EQUIPMENT USED TO DEVELOP REMOTE COATING CAPABILITY FOR HTGR FUEL PARTICLES

R. R. Suchomel, D. P. Stinton, M. K. Preston,* J. L. Heck*
B. J. Bolfing,† W. J. Lackey

*UCC-ND Engineering Division
†Instrumentation and Controls Division

Date Published: December 1978

NOTICE This document contains information of a preliminary nature. It is subject to revision or correction and therefore does not represent a final report.

OAK RIDGE NATIONAL LABORATORY
Oak Ridge, Tennessee 37830
operated by
UNION CARBIDE CORPORATION
for the
DEPARTMENT OF ENERGY

OAK RIDGE NATIONAL LABORATORY LIBRARIES
3 4456 0551554 6

CONTENTS

Abstract 1

Introduction 1

Coating Furnace Description and Requirements 1

Particle Unloading System Concept and Requirements 6

Engineering-Scale Particle Handling System – Components 6

- Inert Atmosphere Enclosure 9
- Coating Chamber Elevator 9
- Coating Chamber Manipulator 10
- Particle Scalping Screen 11
- Coating Chamber Replacement Airlock 12
- Microsphere Batch Weigher 13
- Particle Sampler 14
- Additional Equipment 15

Engineering-Scale Particle Handling System – Instrumentation 15

Summary and Conclusions 18

Acknowledgments 18

Appendix 19

DESIGN AND OPERATION OF EQUIPMENT USED TO DEVELOP REMOTE COATING CAPABILITY FOR HTGR FUEL PARTICLES

R. R. Suchomel, D. P. Stinton, M. K. Preston, J. L. Heck,
B. J. Bolfing, and W. J. Lackey

ABSTRACT

Refabrication of HTGR fuels is a manufacturing process that consists of preparation of fuel kernels, application of multiple layers of pyrolytic carbon and silicon carbide, preparation of fuel rods, and assembly of fuel rods into fuel elements. All the equipment for refabrication of ^{233}U-containing fuel must be designed for completely remote operation and maintenance in hot-cell facilities. Equipment to remotely coat HTGR fuel particles has been designed and operated. Although not all of the equipment development needed for a fully remote coating system has been completed, significant progress has been made.

The most important component of the coating furnace is the gas distributor, which must be simple, reliable, and easily maintainable. Techniques for loading and unloading the coater and handling microspheres have been developed. An engineering-scale system, currently in operation, is being used to verify the workability of these concepts. Coating crucible handling components are used to remove the crucible from the furnace, remove coated particles, and exchange the crucible if necessary. After the batch of particles has been unloaded, it is transferred, weighed, and sampled. The components used in these processes have been tested to ensure that no particle breakage or holdup occurs. Tests of the particle handling system have been very encouraging because no major problems have been encountered. Instrumentation that controls the equipment performed very smoothly and reliably and can be operated remotely.

INTRODUCTION

High-Temperature Gas-Cooled Reactors (HTGRs) utilize the Th-^{233}U fuel cycle. Because of the inherent radiation hazard of ^{232}U-contaminated ^{233}U, fuel reprocessing and refabrication activities must be conducted in a fully remote recycle facility. One of the major refabrication processes involves the application of carbon and silicon carbide coatings to the fuel particles. These coatings provide containment of fission products. A fluidized-bed coating furnace is used to chemically vapor deposit the coatings. In addition, the same furnace is required for a preliminary processing step that involves partial conversion of the fuel kernels from UO_2 to UC_2. Typical parameters for the conversion and coating steps are shown in Table 1.

Work has been carried out for several years at Oak Ridge National Laboratory to develop the coating process and to develop it using equipment specifically designed for remote operation. This is a major development activity and one that is not yet finished; engineering-scale development is continuing, and a conceptual design study for a full-scale prototype coater has been completed.[1] This report summarizes the work to date, which is highlighted by the recent development of an automatic microsphere handling system.

COATING FURNACE DESCRIPTION AND REQUIREMENTS

The basic requirement of a remotely operable coating furnace is that it be precisely that—remotely operable. This requirement is shared by all other refabrication systems, and it necessitates equipment

1. R. R. Suchomel, R. J. Braatz, B. J. Bolfing, and J. L. Heck, *Design Study for a 24-cm HTGR Microsphere Coating Furnace*, ORNL/TM-6321 (May 1978).

Table 1. Fissile microsphere processing parameters

Process	Nominal final diameter (μm)	Process time (min)	Furnace process temperature (°C)	Probable coating and fluidizing gases
Kernel conversion	360	15–30	~1700	Argon
Buffer coating (low-density carbon)	460	2–5	~1300	Acetylene and helium
ILTI[a] coating (high-density carbon)	530	~10	~1300	Propylene and helium
Silicon carbide coating	590	60–180	~1600	Methyltrichlorosilane and hydrogen
OLTI[b] coating (high-density carbon)	660	~10	~1300	Propylene and helium

[a]ILTI—inner low-temperature isotropic.
[b]OLTI—outer low-temperature isotropic.

designed to provide essentially automatic operation and remote maintenance of the furnace itself. Installation, removal, and maintenance of equipment items must be accomplished using only very limited in-cell handling equipment. In the HTGR program, a modular approach to equipment development is being taken so that in the event of in-cell equipment failure, an equipment module can easily be removed and transferred to a special maintenance area for repair.

Equipment items chosen for hot-cell use are selected because of their high reliability, infrequent maintenance requirements, and general compatability with a hot-cell environment. For example, electrical or pneumatic drives are preferred over hydraulic devices because of the eventual radiation degradation of hydraulic fluids and the probability of a major leak or spill of fluid. Metals that can be more easily decontaminated, such as stainless steels, are used where possible.

A number of specific equipment restraints are placed on the coating system because of the nature of the coating process. The gas distributor—the most important component of the coating furnace—must be very reliable to ensure that particles can always be properly unloaded from the furnace. An improved gas distributor that meets this requirement has been developed at ORNL for microsphere coating.[2]

During portions of the coating process, the microspheres are pyrophoric and must be contained within an inert (argon) atmosphere. This presents an additional design challenge since many of the microsphere handling components must be made to operate within this sealed enclosure beyond the reach of in-cell manipulators. Materials for this application must be carefully selected based on resistance to radiation damage, argon degradation, and thermal failure.

A liquid coolant flow is maintained in the shell of the furnace during operation to cool the outer metal surfaces and to minimize the amount of heat released to the surroundings. The obvious choice for the coolant medium would be water except that water is a good neutron moderator. Thus, for criticality reasons the use of water for furnace cooling or for any other major in-cell application is precluded.[3,4]

2. W. J. Lackey, D. P. Stinton, and J. D. Sease, "Improved Gas Distributor for Coating HTGR Fuel Particles," *Nucl. Technol.* **35**(2), 227–37 (1977).

3. W. J. Lackey, J. D. Jenkins, F. J. Homan, R. S. Lowrie, *Assessment of Coater Size for the Fuel Fabrication Prototype Plant*, ORNL/TM-4567 (July 1974).

4. S. R. McNeany and J. D. Jenkins, *Criticality Considerations for ^{233}U Fuels in an HTGR Fuel Refabrication Facility*, ORNL/TM-6136 (January 1978).

Other liquids (e.g., perchloroethylene or Freon 113), having suitable heat transfer, nuclear, and material compatability properties must be substituted.

A representation of the major functional requirements for a remote coating furnace is depicted in Fig. 1. In addition to the furnace, support systems are required that would provide

1. electrical power to heat the furnace;
2. controlled flow of coating and fluidizing gases,
3. a partical handling system to unload the furnace and provide accountability information;
4. a supply of nonmoderating liquid coolant;
5. an effluent scrub to remove soot, tars, and other hydrocarbons and unreacted silane; and
6. an effluent scrub to remove gaseous HCl.

Some of these systems require considerable development prior to their introduction into a remote operation, whereas others are affected only slightly.

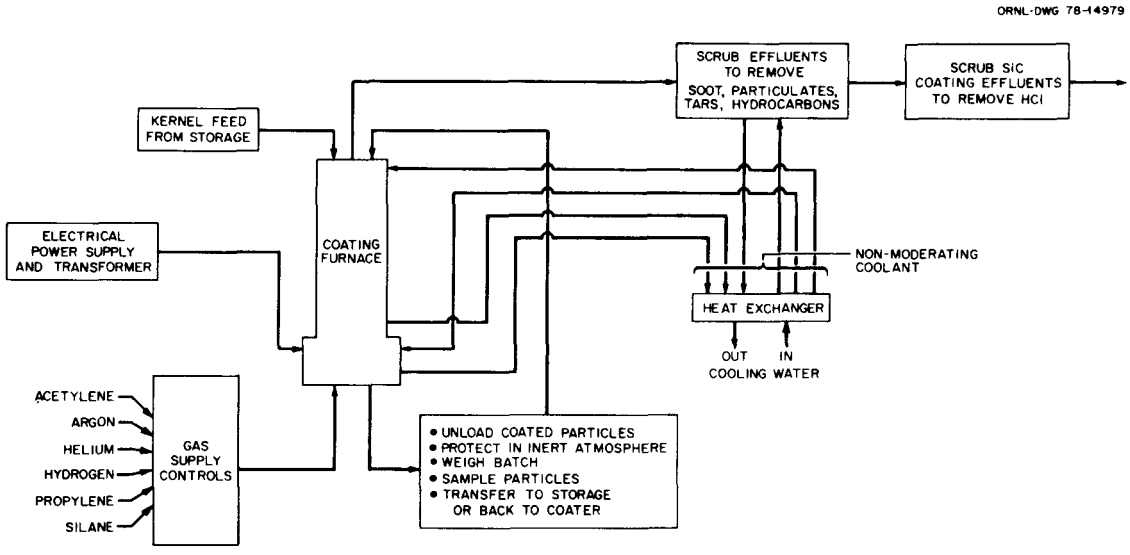

Fig. 1. Coating system functional diagram.

The coating furnace itself has been under development at ORNL for more than ten years, and the general construction of the furnace has been described.[5] A profile of the furnace interior is shown in Fig. 2. The internals of the furnace are made of graphite, which easily withstands the maximum design temperature of 2000° C in the nonoxidizing atmosphere. As shown in the figure, particles are contained during coating within a graphite crucible composed of a cylindrical chamber with a porous carbon bottom. The porous plate, which is held in place by a threaded retaining ring, allows coating gases to enter the reaction zones but prevents particles from accidently being drained from the furnace. The

5. Pratt et al., "Pyrolytic Carbon Coating in an Engineering-Scale System," *Nucl. Appl. Technol.* **6**, 241–55 (March 1969).

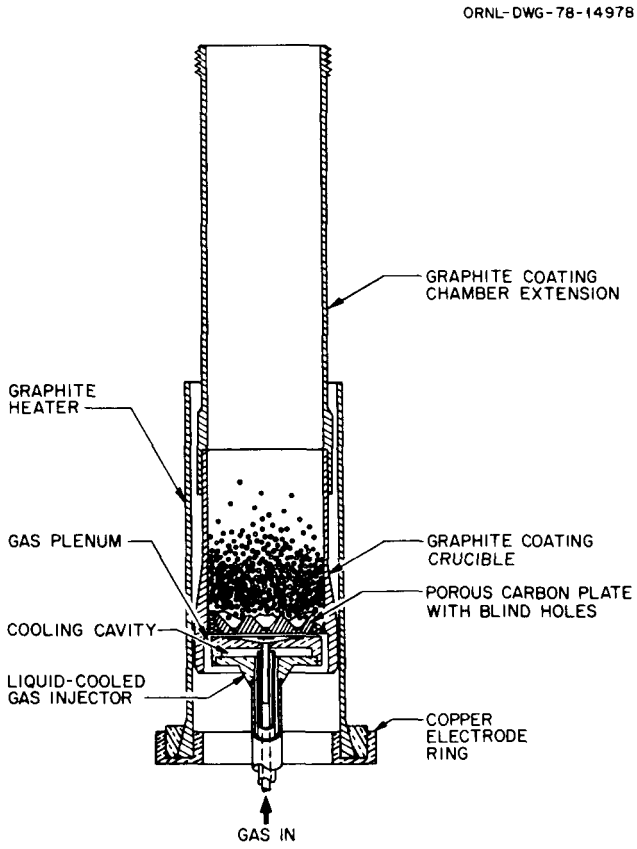

Fig. 2. Coating furnace profile.

chamber and porous plate form a conveniently sized crucible for the purpose of batch unloading. While in the furnace, the crucible is mated with a crucible extension liner to prevent particles from being blown out of the crucible. This liner is secured to and supported by the top of the furnace shell. Radially surrounding the crucible is a three-phase resistance heating element that is also made of graphite. Liquid-cooled copper electrodes are clamped to each of the legs of the element at the bottom. Not shown in Fig. 2 is the outer liquid-cooled metal shell and the graphite felt insulation ring, which is positioned between the heating element and the outer shell. A crucible with an internal diameter of 13 cm is used in the engineering-scale coating furnace; the full-size prototypic furnace will have a 24-cm-ID crucible.

The connecting pipe between the furnace and the scrubber, through which effluents exit the furnace, has traditionally been an area of concern. Soot deposits in this region can completely plug the pipe. A porous sintered metal insert has been successfully used on the 13-cm-ID coater to eliminate this concern. The porous sintered metal tube is used in conjunction with a larger but concentric stainless steel tube to form a double-walled passage. As effluents flow axially within the porous pipe to reach the scrubber, a constant argon flow is introduced between the two tubes, which are sealed at the ends. This argon flow, forced through the porous section in a radial direction, prevents soot deposition on the inner surface of the porous pipe and maintains unrestricted flow of the effluents.

The major design improvements needed to adapt the above design concepts to a remote coating process involve remote disassembly and maintenance of the furnace internals. The crucible can be conveniently replaced using the particle handling equipment to be discussed later, but other components must be replaced using only vertical access. Solutions to specific problems such as providing adequate support for the heating element and maintaining an adequate yet quick-release seal between the furnace shell and the effluent scrubber tank must be identified.

Electric power needed to heat the furnace is supplied by a commercially available saturable reactor-type transformer. The transformer input of 440 V, 3 phase is passed to the furnace as a controlled 0–30 V output. A 100-kVA unit is required for the 13-cm-ID engineering-scale furnace, whereas the prototype coater will require 400 kVA of power. These transformers are highly reliable and should require no special modifications for in-cell use.

The fluidizing, purge, and coating gases used in the coating process are helium, argon, hydrogen, acetylene, and propylene. The inert gases are used to fluidize the bed during heating and cooling and also to dilute the hydrocarbons, acetylene and propylene, during deposition of carbon coatings. Silicon carbide particle coatings are produced by the decomposition of methyltrichlorosilane (CH_3Cl_3Si), which is carried into the reaction chamber by evaporation into a flow of hydrogen carrier gas. Regulation and control of the gas flow rates are maintained by flow controls that are physically separate from the coating furnace; thus there is no need to place the control instruments inside the hot-cell environment.

Furnace cooling cannot be accomplished using water because of the danger of a criticality accident in the event of a major internal cooling passage rupture. Two liquids that do not contain hydrogen and thus have substantially less moderating capability are perchloroethylene (C_2Cl_4) and Freon 113 ($C_2Cl_3F_3$). Both of these liquids should be completely evaluated for coolant applications although perchloroethylene is probably preferable because of its higher boiling point (121°C vs 48°C) and its higher thermal conductivity (3.9×10^{-4} cal/cm·sec·°C vs 1.6×10^{-4} cal/cm·sec·°C). Both liquids have a specific heat of only about 20% that of water.

Perchloroethylene is currently being evaluated; it is being used to cool the gas distributor of the 13-cm-ID furnace. A previously used water flow of 0.27 liter/sec has been replaced by a perchloroethylene flow of 0.47 liter/sec. No noticeable changes in gas distributor temperature or furnace operation have been observed as a result of this increased flow rate, nor has there been any observable coolant degradation or piping corrosion. Long-term use of either liquid will require periodic sampling to ensure that its nonmoderating nature is maintained and that minimal corrosive or polymeric products are formed from either radiation damage or contaminants. No special equipment development is anticipated for the in-cell use of a nonmoderating coolant other than perhaps on-line monitors to detect hydrogen buildup in the coolant.

Directly downstream of the furnace is an effluent scrubber that uses perchloroethylene as a scrubbing medium. The perchloroethylene scrubber removes carbon particulates, heat, and condensible hydrocarbons generated by the coating process. Hot gases from the furnace pass first through a spray tower where they are cooled and scrubbed by a circulating stream of perchloroethylene. A surge vessel beneath this tower functions as a reservoir and gas disentraining section. The exit gas column contains an entrainment separator section of wire mesh, a gas-cooler and condenser section to reduce perchloroethylene vapor discharges in the off-gas, and a demister section of wire mesh. External to the scrubber is the circulation pump, a heat exchanger cooled by a closed loop of perchloroethylene from the furnace cooling system, and a packaged refrigeration unit for cooling the gas cooler and condenser with a closed intermediate loop of chilled perchloroethylene. A nonhydrogenous intermediate cooling loop is required to preclude a criticality accident.

The perchloroethylene will gradually undergo degradation from contact with hot gases and hydrochloric acid. Materials selection for the scrubber components will be the major activity required prior to use of this device in a remote facility. Sensors used to measure scrubbing liquid levels and accumulated degradation also must be tested.

PARTICLE UNLOADING SYSTEM CONCEPT AND REQUIREMENTS

The charge of particles is easily loaded into the coater by direct pneumatic transfer from the kernel preparation area or from a kernel storage container. Unfortunately, furnace unloading is not as simple. For this task, a more complex particle handling system must be used.

The particle handling system must fulfill several important operational criteria. First, the basic furnace design necessitates that the handling system operate beneath the furnace in an area that provides minimal maintenance access. Second, it must contain the particles within an inert gas atmosphere so that pyrophoric particles may be handled safely without product degradation. The furnace unloading mechanism must function reliably and without the possibility that a batch of particles, especially pyrophoric particles, might become stuck inside the furnace. To minimize processing times, the crucible should be unloaded from the furnace while still at a temperature of 600° C. Whenever a batch is unloaded from the furnace, a reasonably accurate weight (~0.1%) should be obtained for purposes of materials accountability, and a small representative particle sample should be extracted for analysis. After these operations have been performed, the particles must be transferred either back into the furnace for the application of additional coating layers or to a particle storage area if no further coatings are to be applied.

The particle unloading equipment will occupy space under the coating furnace, but it must not interfere with the maintenance operations that must be periodically performed on the crucible and gas distributor. The crucible must be periodically lowered from the furnace so that coating deposits can be removed. Provisions should also be made for the routine replacement of the gas distributor through the bottom of the furnace; this is expected to be the most frequent maintenance item.

Because both the particle unloading and furnace maintenance requirements necessitate certain equipment items beneath the furnace, it appears practical to have one set of components responsible for both functions. Figure 3 is a schematic representation of the components that might be required by the particle handling system.

A particle handling system with the processing capability just mentioned was recently added to an existing engineering-scale coating furnace. The furnace, with the installed handling system, is shown in Fig. 4.

ENGINEERING-SCALE PARTICLE HANDLING SYSTEM—COMPONENTS

Although the special connectors, lifting bales, and guide fixtures needed for a truly remote operation are not provided by the engineering-scale system, the particle handling equipment does meet all functional requirements. Through testing and operation of the equipment, a proven design with high reliability and low maintenance requirements will be available for future prototype or in-cell coating systems. This first generation system will allow evaluation of the effects of high temperature, dust, and inert atmosphere on the various components.

Figure 5 presents a three-dimensional view of the under-furnace portion of the handling equipment shown in Fig. 3. A photograph of most of these equipment items as assembled for preinstallation testing is shown in Fig. 6. This section of the report will focus on detailed descriptions of all particle handling components included in the engineering-scale system.

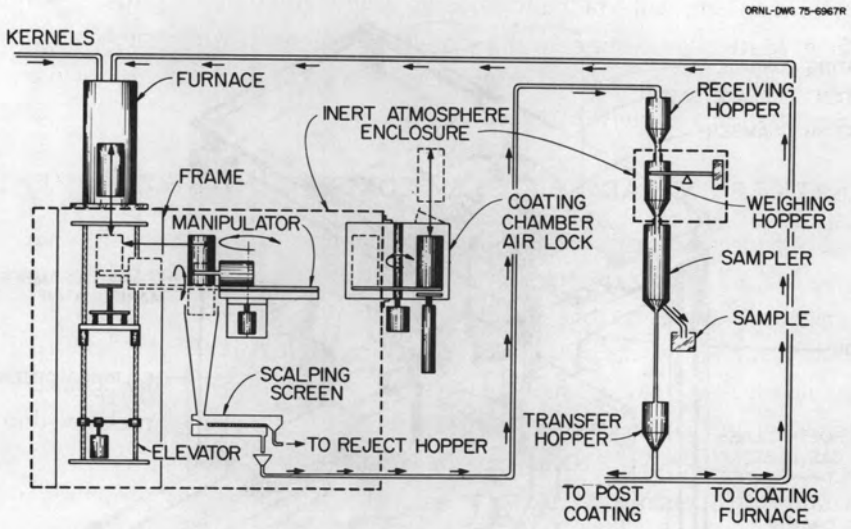

Fig. 3. Particle handling schematic.

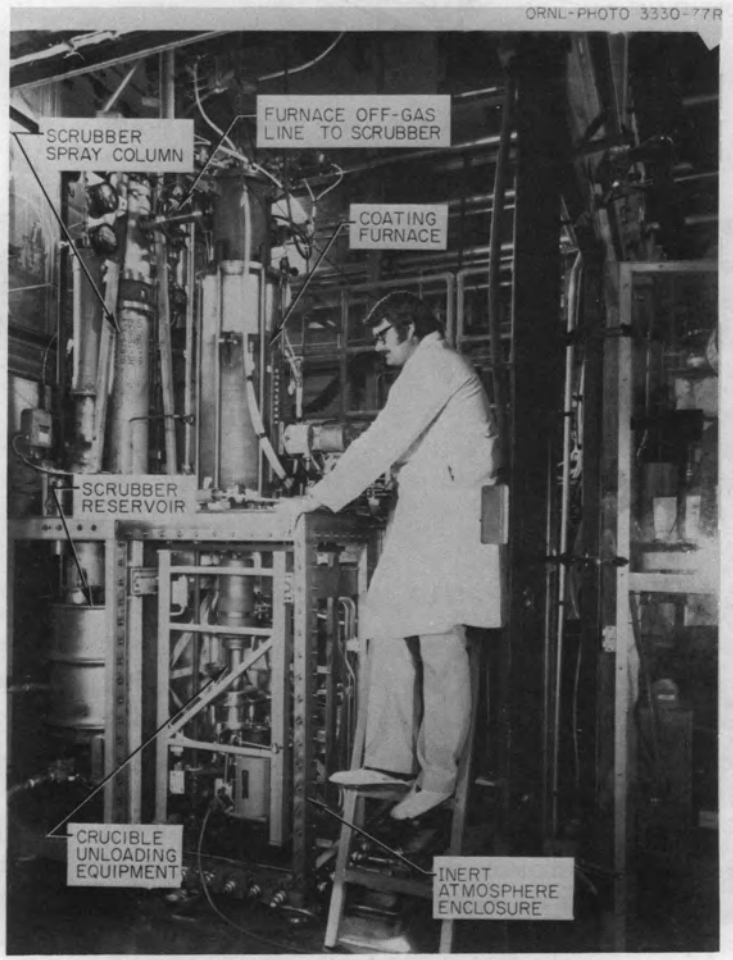

Fig. 4. The 13-cm-ID coater and handling components.

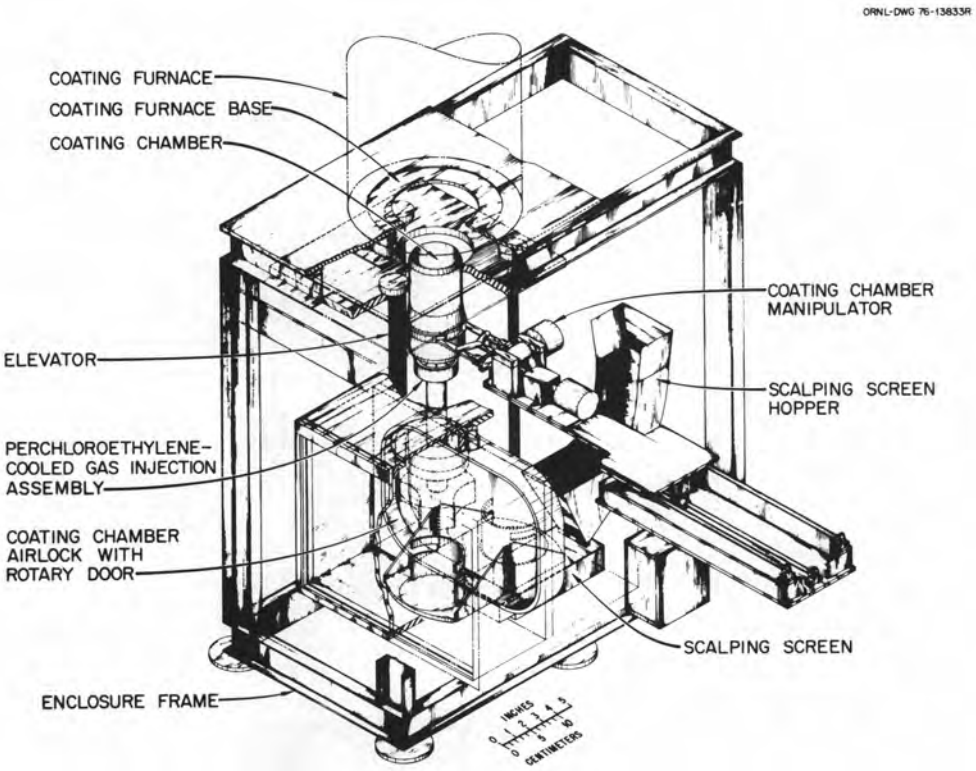

Fig. 5. Cold-engineering coater unloading equipment.

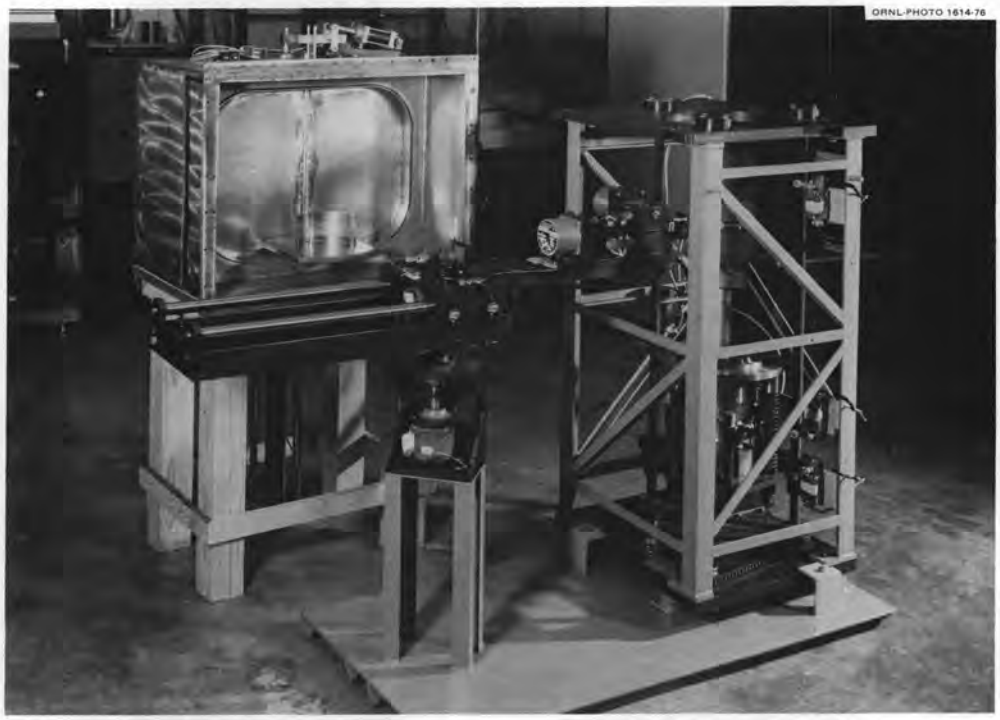

Fig 6. Crucible handling components.

Inert Atmosphere Enclosure

All of the particle handling system components that are positioned under the coating furnace are enclosed to provide inert atmosphere protection for the particles. Access to the working components is provided by removable panels. A fully remote system would most probably have vertical access, and equipment modules would be removable after cover plates were removed. Because the purpose of the enclosure is to provide atmospheric containment, a very low leak rate is desirable. The enclosure frame is of steel channel construction since it supports the coating furnace.

The enclosure contains purge flow lines to maintain the desired atmospheric purity (<100 ppm O_2) and a monitor to confirm this value. The particular off-gas arrangement used in purging this enclosure required that a combustible gas analyzer be positioned within the box to detect any combustible gas leak.

Coating Chamber Elevator

Positioned directly beneath the vertical centerline of the furnace is the coating chamber elevator. The elevator carries the gas injector, which in turn supports the coating crucible with the porous plate gas distributor. Also supported by the elevator is a seal plate which is positioned to form a seal at the bottom of the furnace when the crucible is raised by the elevator to the in-furnace position. As shown in Fig. 7, both the gas injector and seal plate are individually supported by the elevator on spring-loaded

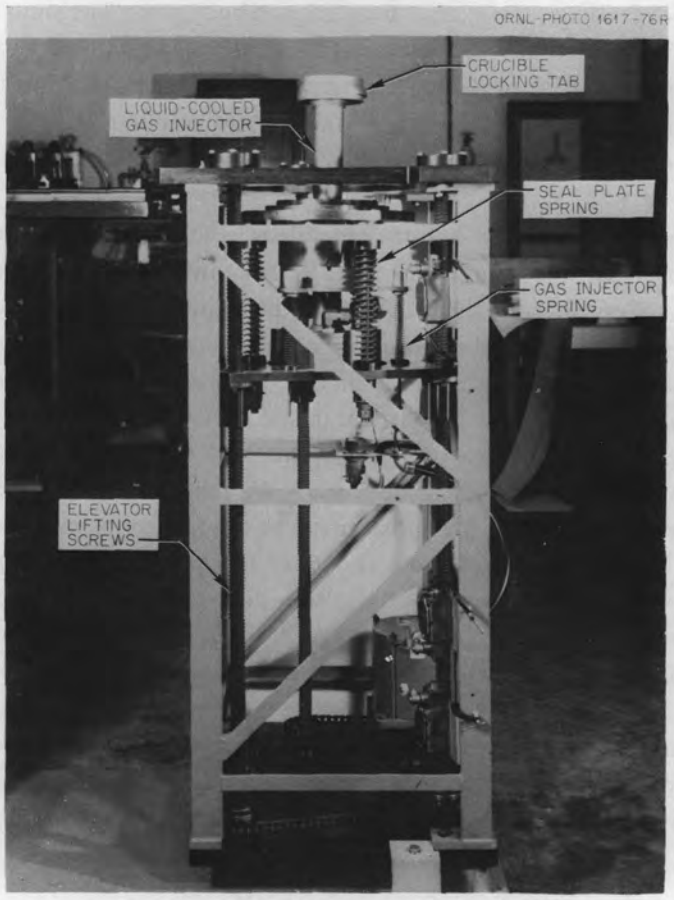

Fig. 7. Coating chamber elevator.

mounts so that separate seals can be made between the furnace shell and seal plate and between the coating crucible and upper liner. A total compressive load of 180 kg is applied to the seal plate while only 68 kg is needed to seal the graphite components. A fail-safe electric brake maintains these forces after the elevator drive motor is turned off.

Liquid coolant must be applied to the metallic gas injector during furnace operation. Because the injector has about 0.7 m of vertical travel, flexible coolant lines are required. A similar requirement is placed on the coating gas inlet line, which also passes through the gas injector. Convoluted Teflon hoses with stainless steel overbraid are currently being used for these applications because they have high flexibility and high burst pressure. Nylon or other more radiation-resistant flexible hoses were not commercially available during construction.

The elevator assembly requires careful alignment since the vertical centerlines of the gas injector and furnace must coincide. Figure 7 shows the locking tab on the gas injector, which ensures that the crucible remains in contact with the gas injector rather than sticking to the upper liner inside the furnace when the elevator is lowered. The head of the gas injector is intentionally offset from the centerline of the stem. A coating crucible, when it is centered on the injector stem, is firmly held in place because the gas injector tab catches into a groove on the inside of the coating chamber.

Coating Chamber Manipulator

The manipulator is used to remove the coating chamber from the gas injector to either empty particles from the crucible or to replace the crucible. To perform this function, the device has five distinct motions: hand grasp, wrist rotate, arm extend, body lift, and body pivot. The joints responsible for these actions are shown in Fig. 8. Initially, it was planned that all motions would be actuated electrically; however, the body rotate and lift motions were converted to pnuematic drive to provide improved positioning accuracy and arm rigidity. Each motion has limit switches to signal completed motions. Connections to the drive motors and limit switches in the arm are made by an umbilical cable to the connector shown in Fig. 8.

The operating procedure for removing the crucible is as follows: With the elevator in the down position and the hand open, the manipulator is extended toward the coating crucible. The arm is extended slightly past the crucible and then retracted to the loading position (this extra motion ensures that the limit switch is always approached from the same direction). After the hand has been closed to grasp the crucible, the arm is again extended to unlock the coating chamber from the gas injector by disengaging the tab lock on the injector. The arm of the manipulator is then raised vertically to clear the crucible from the injector. Gas pressure to the lifting cylinder is carefully regulated so that no motion will occur if the crucible is caught on the injector locking tab. With the crucible free, the elevator then lowers the injector out of the way so that the manipulator can be lowered to its normal elevation. (An easier procedure would be to simply lower the elevator after the manipulator has grasped the crucible; however, if the crucible and injector were not completely disengaged, severe equipment damage would be caused by the powerful electric elevator motor.) After the crucible has been freed from the injector, the manipulator arm is able to retract while holding the crucible and is ready to either exchange or empty the crucible.

The crucible can then be emptied of particles; it is simply inverted by the wrist action of the manipulator to gently dump the particles. The manipulator also aids in replacing the coating crucible; the entire manipulator arm is pivoted and then extended to release the crucible into an airlock, through which the crucible is exchanged for a replacement.

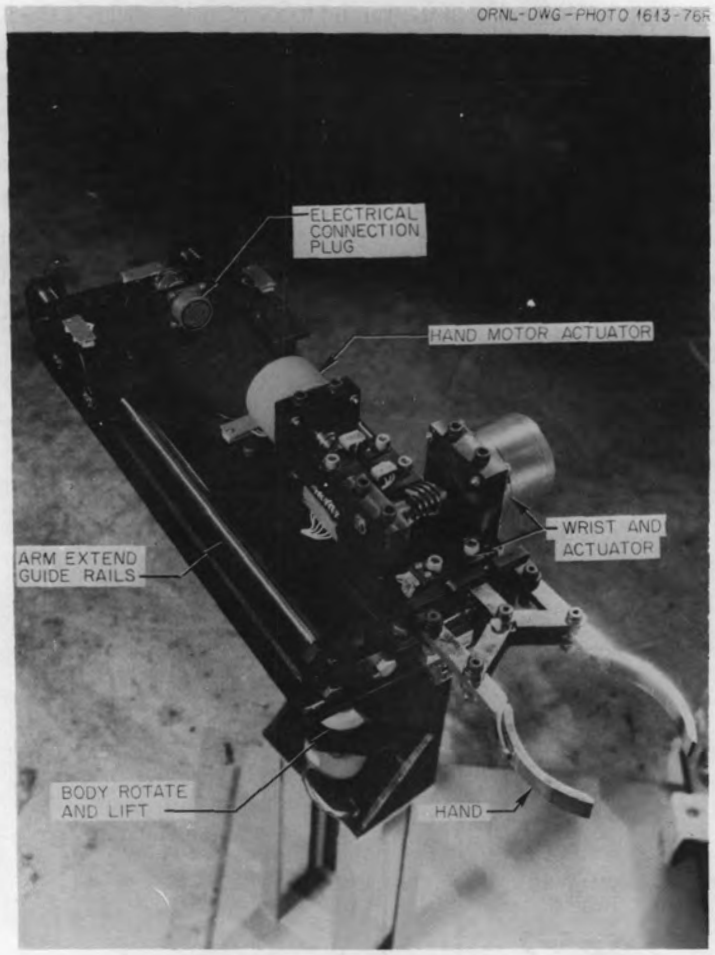

Fig. 8. Coating chamber manipulator.

As with the other equipment items, the various motions of the manipulator and the sequencing control of these motions are regulated by a programmable logic controller. Implementation of the controller is discussed in a subsequent section of this report.

Particle Scalping Screen

Because of limited space inside the inert atmosphere enclosure, the weigher and sampler are located externally. Particles are moved to the weighing and sampling devices by pneumatic transfer. Preparing a batch of particles for transfer requires screening to scalp off any soot flakes or coating debris that might interfere with the transfer. The scalping device consists of a screen with catch pan mounted to an electrically driven vibrator. The screen has a hole diameter of 1.14 mm with 35 holes per square centimeter, which results in an open area of 37%. Particles easily pass through the screen while flakes "walk" off the end of the screen and are collected in a separate hopper.

Particles are directed from the tilting crucible to the scalping screen by a tall rectangular funnel. This funnel contains the particles during pouring and feeds them onto the screen at a uniform rate. Considerable modification of the funnel design was necessary before acceptable performance was

achieved. Baffles were added to the inside of the funnel to slow the particles' velocity as they meet the screen. Prior to this modification, some particles bounced completely past the screened section or rebounded out of the device in a gap between the funnel and the screen. To minimize this latter difficulty, a heavy floating collar was positioned around the funnel to plug the gap. Since the collar is not attached to either the funnel or the screen, it does not interfere with the vibration of the screen.

As particles pass through the screen they are directed into the pneumatic transfer line. Operation of this vacuum transfer system is depicted in Fig. 9. This system operates in much the same manner as conventional positive pressure pneumatic transfer.[6] By placing the mechanical vacuum pump within the inert atmosphere enclosure, inleakage of air into the pump is prevented and pressure fluctuations within the enclosure are minimized.

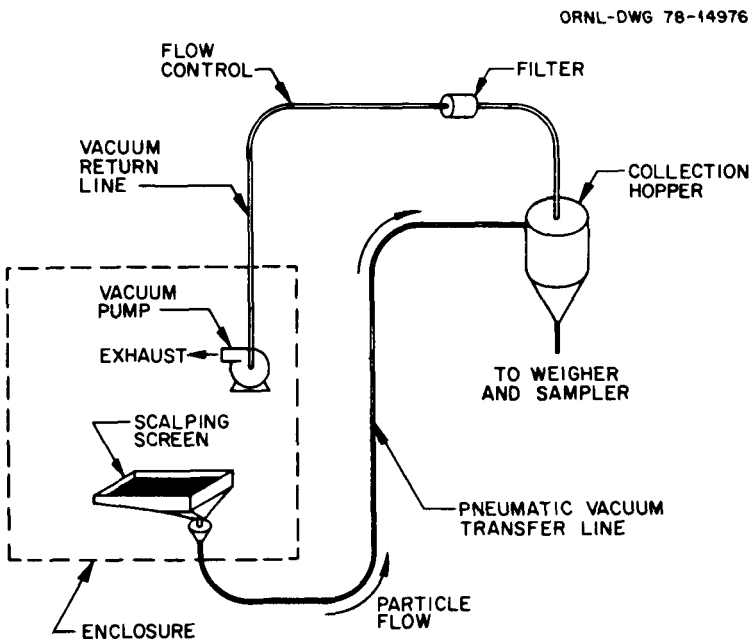

Fig. 9. Batch unloader pneumatic transfer diagram.

Coating Chamber Replacement Airlock

The coating chamber airlock provides passage into the inert atmosphere enclosure so that crucibles can be replaced. In the engineering-scale system the airlock is a horizontally mounted unit that has a rotary door through which crucibles are moved in and out. A preinstallation photograph shows a crucible being transferred by means of the rotary door. A seal, set into the rotary door frame, is inflated

6. J. E. Mack and D. R. Johnson, *Development of a Pneumatic Transfer System for HTGR Recycle Fuel Particles*, ORNL/TM-6169 (February 1978).

to seal against the band of the door after rotation is complete. The inflated seal provides atmospheric separation between the enclosure and the outer chamber so that the outer chamber can be opened to air without loss of the inert atmosphere within the enclosure (see top hatch in Fig. 10).

The use of the rotary door design was dictated by space limitations in the area of the coating furnace. In future systems the airlock probably will be mounted atop the inert atmosphere enclosure to provide better access for maintenance functions. In addition, a top-mounted unit could be easily integrated with a multiple-crucible storage device.

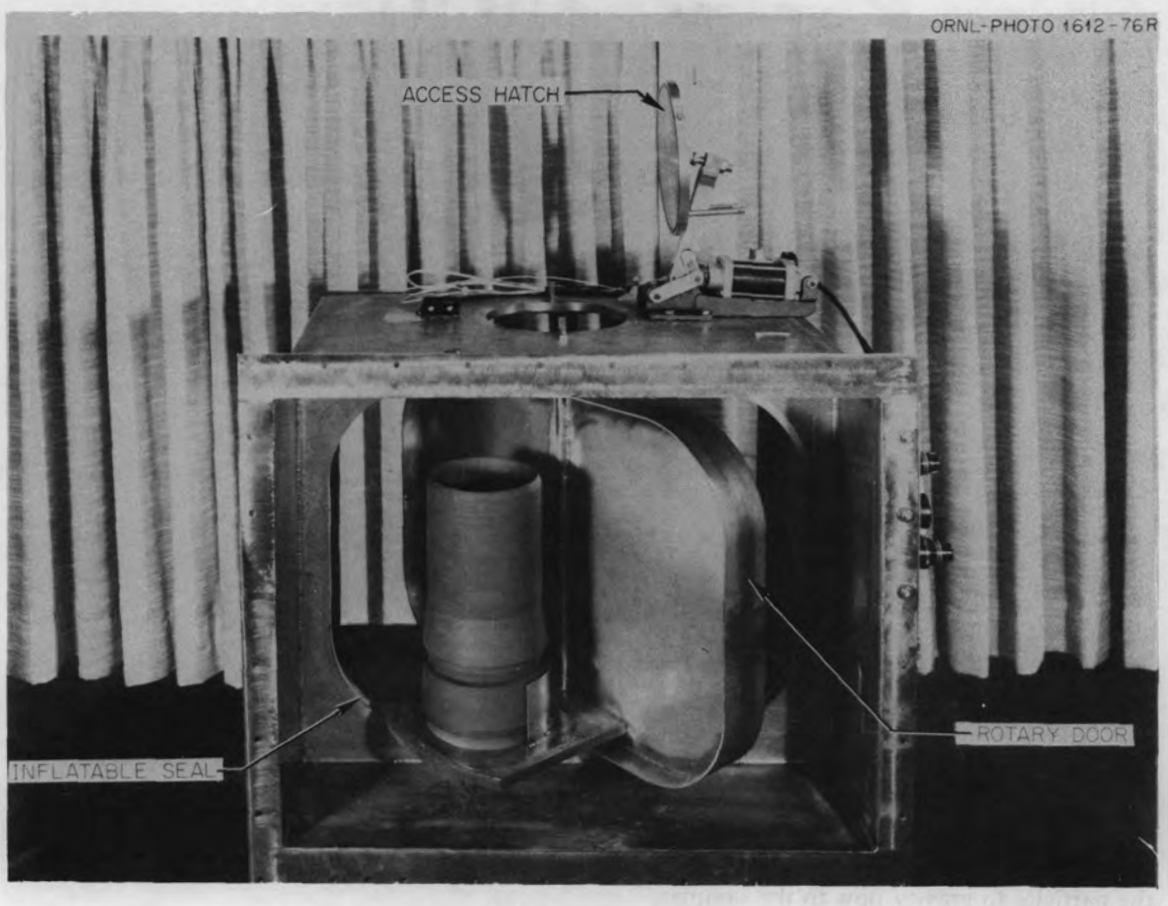

Fig. 10. Coating chamber replacement airlock.

Microsphere Batch Weigher

After a batch of particles has been unloaded from the furnace using the elevator, manipulator, and scalping screen, it is then weighed to obtain information for materials accountability. The weighing device is located directly beneath the pneumatic transfer collection hopper, which permits gravity feed into the weigher. The weigher, shown in Fig. 11, consists of a strain gage–type load cell that supports a freely hanging particle container. An inert atmosphere jacket is provided so that pyrophoric particles can be weighed. Also included is a remotely activated 2-kg weight which can be attached to the sensor to

Fig. 11. Precision batch weighing device.

check its calibration. The weighing operation is quite simple: Particles are fed into the tared particle container from the overhead hopper, and the weight is read on a digital display panel located remote from the load cell. After the reading is taken, a valve on the bottom of the container is opened, allowing the particles to gravity flow to the sampler.

The load cell is protected with a baffle plate from any thermal drift that may be induced by hot particles in the weigh container. A double-walled fill tube is used near the load cell to further reduce heat effects. The load cell is protected from overloading by a locking cam which is remotely activated using an air cylinder. Although the weigher has not undergone long-term testing, preinstallation tests have shown that the accuracy required for accountability, 0.1%, was achieved over the entire range of 1 to 10 kg.

Particle Sampler

The sampling device is positioned directly beneath the weigher so that once the batch weight is obtained, the batch can be drained directly into the sampler. The sampler, specifically designed for this installation, has no moving parts, occupies minimal space, and requires no maintenance. The sampler consists of a series of sequential conical splitters; each splitting stage diverts one-half of the particles out

of the sample stream while sending the remainder on to the succeeding stage. At each stage the sample size is reduced by half so the sample-to-batch ratio is controlled by the number of stages. For example, the five-stage sampler used in this system extracts 1/32 or about 3% of the batch. Particle passage through the device is by gravity flow. There are no gaps or projections to trap and retain particles. A more complete description of the operation of the sampler as well as results of preinstallation testing is available.[7]

Additional Equipment

The particle batch, except for those particles removed by the sampler, are collected in a hopper located beneath the sampler. From this hopper the batch can be pneumatically transferred either back into the furnace or to another work station for storage or further processing. The two possible transfer paths are shown schematically in Fig. 3.

The particles in the sample fall by gravity into an isolation valve. The valve is a ball valve that has been modified so that a pocket is formed within the ball. When the pocket is inverted by rotation of the ball, the particles pour out. From this valve the particles enter a pneumatic transfer line in which they are vacuum transferred to an inspection station.

ENGINEERING-SCALE PARTICLE HANDLING SYSTEM—INSTRUMENTATION

The large number of movements, actuators, and interlocks used in the particle handling system necessitates the use of an advanced control system. The control system is centered around a programmable controller (PC), Modicon model 284, manufactured by Modicon Corporation, Andover, Massachusetts.

The furnace operator can control and monitor the status of each component using the display panel shown in Fig. 12. The panel also houses the flow controls needed for the pneumatic transfer operations. Instrumentation purchased from Orbitran Company, Inc., of Lakeside, California computes and displays batch weight using the output of the load cell in the batch weigher; this equipment is also located in the panel. The oxygen analyzer from Applied Electrochemistry, Inc., of Sunnyvale, California, which ensures argon purity in the inert enclosures, is mounted in an adjacent panel not shown in Fig. 12.

Control of the handling system is provided by the PC, which is a solid state computer-based device used to control discrete process events as a function of process interlocks and sequences. These devices replace hardwired relay control panels and provide the flexibility of a software-based programmable control system. The program that controls the process events or cycle is stored in the controller's memory. The PC monitors the state of process sensors and actuators that are hardwired to the PC input/output modules. Process actuators are then energized at the proper time as a function of the input/output status and PC internal functions such as timer, counter, or sequencer states.

Any program to be stored in PC memory is entered in relay ladder diagram symbology using a programming panel. The particular PC used for this application restricts the programmer to a four-contact-per-line format as shown in the program listing in the Appendix. This program listing is divided into two parts: PC #1 contains the program that controls the pneumatic transfer, and the PC #2 program controls the manipulator-centered unloader mechanism.

7. R. R. Suchomel and W. J. Lackey, *Device for Sampling HTGR Recycle Fuel Particles*, ORNL/TM-5739 (March 1977).

Fig. 12. Control panel for particle handling system.

Each program provides three control modes: automatic, semiautomatic, and manual. These modes are implemented using the ladder diagram format shown in Fig. 13. In the manual mode an output (process actuator) is controlled only by a control panel hardswitch assigned to that particular actuator. When in the semiautomatic mode, the output is controlled not only by a control panel hardswitch but also by safety interlock conditions and stop conditions (lines C_1 and C_2 of Fig. 13). In the automatic mode the output is controlled by a sequencer or a timer or counter line and safety interlock conditions (line C_1 of Fig. 13).

The overall process is divided into major subfunctions as indicated by the process control panel shown in Figs. 12 and 14. For example, *load crucible into furnace* is classified as a major subfunction of the process. The individual steps that make up the *load crucible into furnace* subfunction are shown in Fig. 14. These steps are listed in the sequence required in the *load crucible into furnace* subfunction block. In the automatic mode, the sequencer energizes these steps one at a time until the subfunction

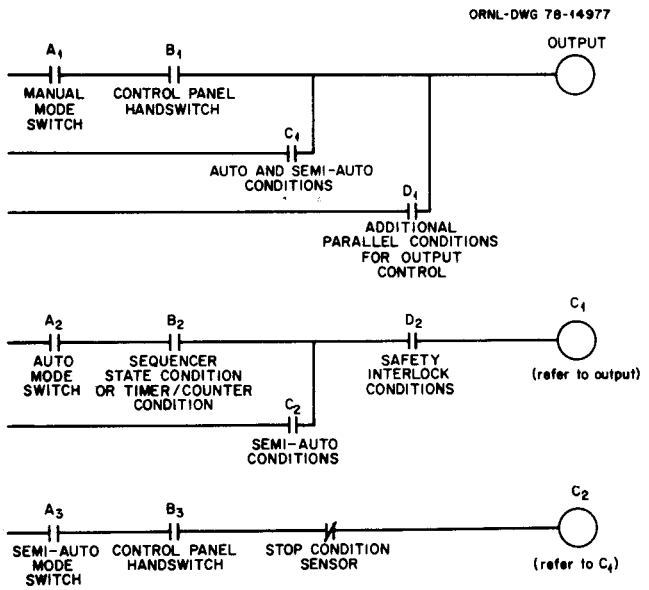

Fig. 13. Typical ladder diagram control format.

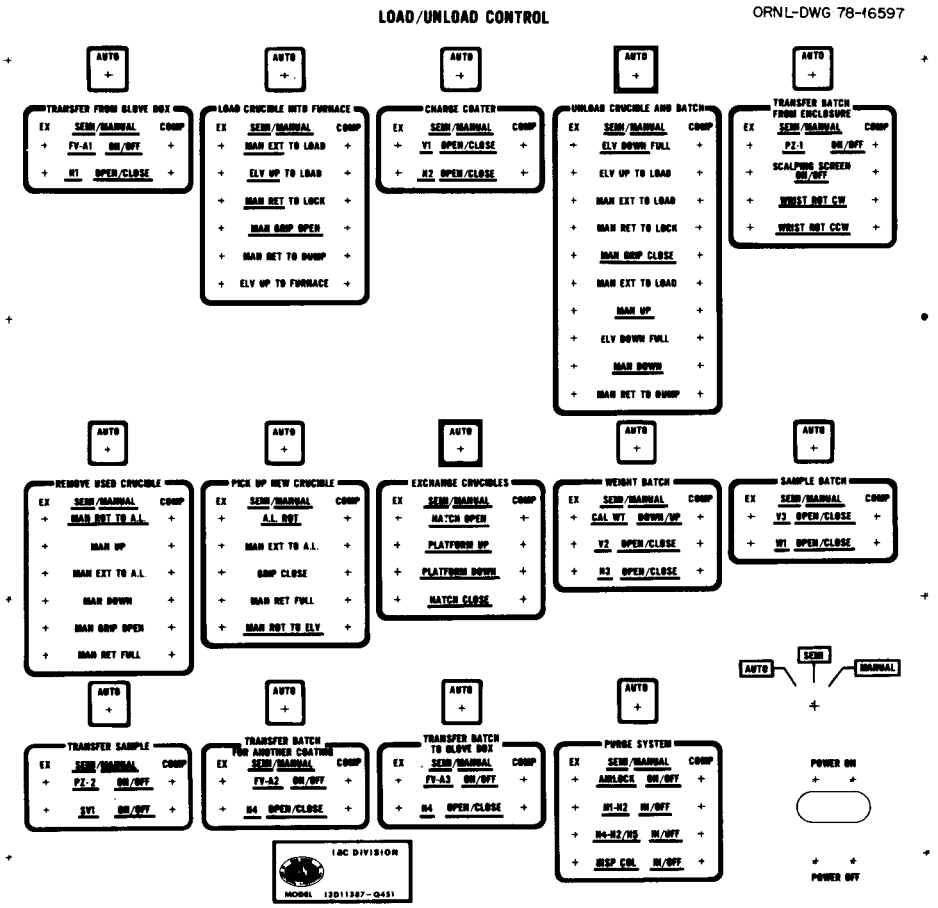

Fig. 14. Control switch panel.

action is complete. Then the operator can initiate the automatic sequence for the next process subfunction, which in this example would be *charge coater.*

It is apparent from Fig. 14 that some process steps within each process subfunction are repeated within a subfunction or within other subfunctions. Therefore, a given output or actuator is energized for different subfunctions at different times. This means that several parallel conditions can control an output during the overall coater unloading process, but only one of these conditions is enabled for a given mode and a given subfunction. These additional parallel conditions that control an output are illustrated in Fig. 13 by condition D_1.

To summarize, the control program listed in the Appendix can be interpreted by using the outline program format shown in Fig. 13. In addition, the sequence of event occurrence for a given subfunction is shown in Fig. 14. Thus each step in the process will have a set of logical conditions, similar in format to Fig. 13, for controlling the process action in the proper sequence and with sufficient safety interlocking.

SUMMARY AND CONCLUSIONS

Coating furnace equipment development has been carried out for several years. The basic design concept for a full-size remotely operable coating furnace has been formalized although many design details must be worked out. This can be done in the next planned development phase—the design and operation of a prototype coater.

Support systems for the furnace are essential for its operation and require various degrees of further development. In this respect, the particle handling system is most important because it will require the most development effort. The cold engineering particle handling system recently integrated with the 13-cm-ID coater will answer many of the questions surrounding its application in a remote hot-cell facility.

Long-term operation of this equipment will determine material lifetimes in the dusty, thermally hot, inert atmosphere. The dust and carbon soot may necessitate the use of substitute components or the addition of wipers and baffles in certain spots. The thermal environment that the elevator and manipulator components can withstand will fix the maximum furnace temperature at which the particles can be unloaded. This limit will affect processing times. The inert gas atmosphere may shorten too greatly the operating life of specific motors, sensors, or other components.

To date the operation of the particle handling system has been encouraging. No maintenance activity requiring removal of in-cell equipment from its operation area has been encountered. The control system has operated smoothly and is providing all the information that is required of a remotely operated system.

ACKNOWLEDGMENTS

Installation and testing of the components was ably executed with the assistance of D. Kiplinger, C. E. DeVore, W. H. Elliott, Jr., and L. J. Turner. The manuscript was composed by Edna Whittington and edited by Amy L. Harkey.

APPENDIX

A listing of the control program for the 13-cm-ID coating furnace unloader loop is contained in the following pages. The program is shown in the four-node format as it is entered into the programmable controller. The listing shows all process event interlocking and sequencing. All sensor inputs and actuator outputs are labeled. Some line numbers are used for daisy chaining many interlocks together. Usage cross referencing for each line number is shown adjacent to the line number.

The control conditions for a given actuator are given at the line number assigned to that actuator. The sensors or line numbers controlling that actuator are shown in the four-node format adjacent to the actuator line number. For example, line number 27 in PC #2 is assigned to the airlock latch open actuator. The condition controlling this actuator in Boolean algebra format is

$$27 = [(52 \text{ or } 27) \text{ and } \overline{51}] \text{ or } 53 \ .$$

Refer to lines 51, 52, and 53 for the actual sensor or actuator conditions controlling line 27. Line 27 is "ORED" with line 52 on the right side of the above expression for latching on line 27 even after condition 52 is no longer true.

The above example indicates how many conditions can be daisy chained together in the four-node format to control a single output. The example also demonstrates how the following control program listing can be interpreted.

COATER UNLOADER-PC#1

MODICON CONTROLLER # 495 DATE 07 SEP 78 28401C

```
  A NODE   B NODE   C NODE   D NODE    LINE #     CROSS REFERENCE LIST

I
I PC2-40   H2OPLS   FVV1-1   FVV1-1   FVV1-1   I (CHARGE COATER)
I  379      302      013      013             I V1 OPEN/CLOSE INTERLOCK
I--] [-----] [----------*--------*---(001)--I AUTO AND SEMIAUTO MODE
I-------------------] [-^        ^           I
I----------------------------] [-^            I NO 4,13
I                                             I
I
I
I HS-58    FVV1-1   AUTO     STPCNT   FVV1-1   I (CHARGE COATER)
I  365      002      102      210             I V1 OPEN/CLOSE AUTO MODE
I--] [----------*---] [------]\[------(002)--I LATCH
I-----------] [-^                             I
I                                             I NO 2,13
I                                             I
I
I
I HS-9     MANUAL   MANUAL   MANUAL   FVV1-1   I (CHARGE COATER)
I  325      100      100      100             I V1 OPEN/CLOSE MANUAL MODE
I--] [------] [------] [------] [------(003)--I
I                                             I NO 13
I                                             I
I
I
I HS-9     SEMI     FVV1-1   FVV1-1   FVV1-1   I (CHARGE COATER)
I  325      101      001      001             I V1 OPEN/CLOSE SEMIAUTO MODE
I--] [------] [------] [------] [------(004)--I
I                                             I NO 13
I                                             I
I
I
I FVV1-1   PC2-40   PC2-40   PC2-40   FVH2-1   I (CHARGE COATER)
I  013      379      379      379             I H2 OPEN/CLOSE INTERLOCK
I--] [-----] [------] [------] [------(005)--I AUTO AND SEMIAUTO,REQUIRES
I                                             I V1 OPEN AND ELEVATOR UP
I                                             I
I                                             I NO 6,7
I                                             I
I
I
I SEMI     FVH2-1   HS-10    HS-10    FVH2-1   I (CHARGE COATER)
I  101      005      326      326             I H2 OPEN CLOSE SEMIAUTO MODE
I--] [------] [------] [------] [------(006)--I
I                                             I NO 11
I                                             I
I
```

COATER UNLOADER-PC#1

MODICON CONTROLLER # 495 DATE 07 SEP 78 28401C

```
  A NODE   B NODE   C NODE   D NODE    LINE #     CROSS REFERENCE LIST

I
I AUTO     FVH2-1   STPCNT   STPCNT   FVH2-1   I (CHARGE COATER)
I  102      005      210      210              I H2 OPEN/CLOSE AUTO MODE
I--] [------] [------]\[------]\[------(007)--I
I                                              I NO 11
I                                              I
I
I
I HS-56    FVA-31   AUTO     STPCNT   FVA-31   I (TRANSFER FROM GLOVE BOX)
I  364      008      102      210              I H1 OVERPRESSURE AUTO MODE
I--] [----------*---] [------]\[------(008)--I
I-----------] [-^                              I NO 8,29,204,206
I                                              I
I
I
I H2OPLS   FVH2-1   FVH2-1   FVH2-1   FVA-31   I (TRANSFER FROM GLOVE BOX)
I  302      011      011      011              I H1 OVERPRESSURE INTERLOCK
I--] [------]\[------]\[------]\[------(009)--I AUTO OR SEMIAUTO MODE
I                                              I REQUIRES FV-H2-1 CLOSED
I                                              I
I                                              I NO 29
I                                              I
I
I
I HS-1     SEMI     SEMI     SEMI     FVA-31   I (TRANSFER FROM GLOVE BOX)
I  323      101      101      101              I H1 OVERPRESSURE SEMIAUTO
I--] [------] [------] [------] [------(010)--I
I                                              I NO 29
I                                              I
I
I
I FVH2-1   FVH2-1   V10PLS   FVH2-1   FVH2-1   I (CHARGE COATER)
I  007      006      303      118              I H2 OPEN/CLOSE
I--] [----------*---] [----------*---(011)--I
I-----------] [-^                 ^            I NC 9,63
I-----------------------------] [-^            I
I
I
I FVA-3    FVA-1    FVA-1    FVA-1    FVH2-2   I (TRANSFER FROM GLOVE BOX)
I  023      029      029      029              I (TRANSFER BATCH FOR ANOTHER
I--] [----------*--------*--------*---(012)--I COATING) H2 OFF-GAS VENT
I-----------] [-^        ^        ^            I ALL MODES
I--------------------] [-^        ^            I
I-----------------------------] [-^            I NO 48,71
I                                              I
I
```

COATER UNLOADER-PC#1

MODICON CONTROLLER # 495 DATE 07 SEP 78 28401C

```
  A NODE   B NODE   C NODE   D NODE    LINE #     CROSS REFERENCE LIST

I
I FVV1-1   FVV1-1   FVV1-1   FVV1-1   FVV1-1   I (CHARGE COATER)
I  002      001      003      004             I V1 OPEN/CLOSE
I--] [-----] [---------*-------*---(013)--I
I-------------------] [-^        ^            I NO 1,5
I----------------------------] [-^            I
I
I
I FVH3-1   FVH3-1   FVH3-1   FVH3-1   FVH2-1   I (SAMPLE BATCH)
I  119      120      120      120             I H3 OPEN/CLOSE
I--] [----------*-------*-------*---(014)--I
I-----------] [-^        ^        ^            I NC 52
I-------------------] [-^        ^            I
I----------------------------] [-^            I
I
I
I                                    DIS OFF I
I-                                  --(015)--I
I
I
I MV2-1    MV2-1    MV2-1    MV2-1    MV2-1    I (SAMPLE BATCH)
I  114      115      115      115             I V2 OPEN/CLOSE
I--] [---------*-------*-------*---(016)--I
I----------] [-^        ^        ^            I
I------------------] [-^        ^            I
I---------------------------] [-^            I
I
I
I                                    DIS OFF I
I-                                  --(017)--I
I
I
I                                    DIS OFF I
I-                                  --(018)--I
I
I
I MV3-1    MV3-1    MV3-1    MV3-1    MV3-1    I (SAMPLE BATCH)
I  103      104      104      104             I V3 OPEN/CLOSE
I--] [---------*-------*-------*---(019)--I
I----------] [-^        ^        ^            I NC 71,74,90,91
I------------------] [-^        ^            I
I---------------------------] [-^            I
I
I
I MSV1-1   MSV1-1   MSV1-1   MSV1-1   MSV1-1   I (TRANSFER SAMPLE)
I  059      060      060      060             I SAMPLE   VALVE NO. 1
I--] [-----]\[-----]\[-----]\[-----(020)--I
I                                            I NO 205
I                                            I
I
```

COATER UNLOADER-PC#1

MODICON CONTROLLER # 495 DATE 07 SEP 78 284010

```
  A NODE   B NODE   C NODE   D NODE    LINE #     CROSS REFERENCE LIST

I
I FVH4-1   FVH4-1   FVH4-1   FVH4-1   FVH4-1   I (TRANSFER BATCH TO GLOVE
I  089      090      090      090             I BOX)
I--] [----------*--------*--------*---(021)--I H4 OPEN CLOSE
I----------] [-^        ^        ^            I
I-------------------] [-^        ^            I NO 48
I----------------------------] [-^            I
I
I
I FVA-2    FVA-2    FVA-2    FVA-2    FVA-2   I (TRANSFER BATCH TO GLOVE
I  061      064      073      072             I BOX)
I--] [----------*---] [----------*---(022)--I H4 TO H5 TRANSFER GAS. 3
I----------] [-^                 ^            I
I----------------------------] [-^            I NO 25,45,51,74,209
I                                             I NC 67
I
I
I FVA-3    FVA-3    FVA-3    FVA-3    FVA-3   I (TRANSFER BATCH FOR ANOTHER
I  065      066      067      070             I COATING)
I--] [-----] [-----] [----------*---(023)--I FV-A3,H4 TRANSFER TO H2
I----------------------------] [-^            I
I                                             I NO 12,45,50,51,71,117,201,
I                                             I  202
I                                             I NC 62
I
I
I FVH5-1   FVH5-1   FVH5-1   FVH5-1   FVH5-1   I (UNLOAD BATCH)
I  085      084      086      086             I H5 OPEN/CLOSE
I--] [---------*--------*--------*---(024)--I
I----------] [-^        ^        ^            I NO 208
I-------------------] [-^        ^            I NC 62,66
I----------------------------] [-^            I
I
I
I FVA-2    FVA-2    FVA-2    FVA-2    FVH5-2   I (TRANSFER BATCH TO GLOVE
I  022      022      022      022             I BOX),H5 VENT TO OFF GAS
I--] [-----] [-----] [-----] [------(025)--I FV-H5-2
I                                             I
I                                             I NC 67
I
I
I MSV2-1   MSV2-1   MSV2-1   MSV2-1   MSV2-1   I (UNLOAD SAMPLE)
I  083      084      084      084             I SAMPLE VALVE H2 OPEN/CLOSE
I--] [-----]\[-----]\[-----]\[-----(026)--I
I                                             I NO 207,212
I                                             I
I
```

COATER UNLOADER-PC#1

MODICON CONTROLLER # 495 DATE 07 SEP 78 28401C

```
  A NODE   B NODE   C NODE   D NODE    LINE #     CROSS REFERENCE LIST

I
I PZ-2     PZ-2     PZ-2     PZ-2     PZ-2      I (TRANSFER SAMPLE)
I  055      087      054      056               I PZ-2  TRANSFER PUMP
I--] [------] [----------*--------*---(027)--I
I-------------------] [-^        ^             I NO 57,58
I---------------------------] [-^              I
I
I
I FVH1-1   FVH1-1   FVH1-1   FVH1-1   FVH1-1    I (TRANSFER FROM GLOVE BOX)
I  116      117      117      117               I H1 OPEN/CLOSE
I--] [----------*--------*--------*---(028)--I
I-----------] [-^        ^        ^             I NO 206
I-------------------] [-^        ^             I
I---------------------------] [-^              I
I
I
I FVA-31   FVA-31   FVA-31   FVA-31   FVA-1     I (TRANSFER FROM GLOVE BOX)
I  008      010      009      041               I FVA-1
I--] [----------*---] [----------*---(029)--I H1 TRANSFER TO H2
I-----------] [-^                 ^             I
I---------------------------] [-^              I NO 12,45,48,50,90,204
I                                               I NC 203
I
I
I                                   DIS OFF I
I-                                 --(030)--I
I
I
I                                   DIS OFF I
I-                                 --(031)--I
I
I
I                                   DIS OFF I
I-                                 --(032)--I
I
I
I                                   DIS OFF I
I-                                 --(033)--I
I
I
I                                   DIS OFF I
I-                                 --(034)--I
I
I
I                                   DIS OFF I
I-                                 --(035)--I
I
```

```
                                COATER UNLOADER-PC#1

MODICON CONTROLLER # 495      DATE 07 SEP 78            28401C

  A NODE   B NODE   C NODE   D NODE   LINE #    CROSS REFERENCE LIST


I
I                                    DIS OFF I
I-                                  --(036)--I
I
I
I                                    DIS OFF I
I-                                  --(037)--I
I
I
I                                    DIS OFF I
I-                                  --(038)--I
I
I
I                                    DIS OFF I
I-                                  --(039)--I
I
I
I                                    DIS OFF I
I-                                  --(040)--I
I
I
I HS-1     MANUAL   MANUAL   MANUAL   FVA-31   I (TRANSFER FROM GLOVE BOX)
I  323      100      100      100              I H1 OVERPRESSURE,MANUAL MODE
I--] [------] [------] [------] [------(041)--I
I                                               I NO 29
I                                               I
I
I
I AUTO     STPCNT   FVH1-1   FVH1-1   FVA1-1   I (TRANSFER FROM GLOVE BOX)
I  102      210      204      204              I H1 OPEN/CLOSE AUTO MODE
I--] [------]\[------] [------] [------(042)--I INTERLOCK
I                                               I
I                                               I NO 117
I                                               I
I
I
I                                    DIS OFF I
I-                                  --(043)--I
I
I
I                                    DIS OFF I
I-                                  --(044)--I
I
I
I FVA-1    FVA-2    FVA-3    FVA-3    FVA-41   I (TRANSFER FROM GLOVE BOX)
I  029      022      023      023              I FVA-41 VALVES IN FLOW
I--] [---------*--------*--------*---(045)--I TRANSMITTER FOR PRESSURE
I-----------] [-^        ^        ^            I TRANSFER
I-------------------] [-^        ^            I
I---------------------------] [-^             I
I
```

```
                              COATER UNLOADER-PC#1

MODICON CONTROLLER # 495      DATE 07 SEP 78          28401C

  A NODE   B NODE   C NODE   D NODE    LINE #     CROSS REFERENCE LIST


I
I                                      DIS OFF I
I-                                    --(046)--I
I
I
I                                      DIS OFF I
I-                                    --(047)--I
I
I
I FVA-31   FVH2-2   FVA-1    FVH4-1   FVH1-1    I (TRANSFER FROM GLOVE BOX)
I  050      012      029      021              I H1 OPEN AUTO MODE INTERLOCK
I--] [------] [------] [------] [------(048)--I
I                                              I NO 49,117
I                                              I
I
I
I SEMI     FVH1-1   FVH1-1   HS-2     FVH1-1    I (TRANSFER FROM GLOVE BOX)
I  101      048      204      324              I H1 OPEN/CLOSE SEMIAUTO MODE
I--] [------] [------] [------] [------(049)--I
I                                              I NO 117
I                                              I
I
I
I FVA-1    FVA-3    FVA-3    FVA-3    FVA-31    I (TRANSFER FROM GLOVE BOX)
I  029      023      023      023              I FVA-31 ON
I--] [----------*--------*--------*---(050)--I H1 OVERPRESSURE
I-----------] [-^        ^        ^            I
I-------------------] [-^        ^            I NO 48,78
I----------------------------] [-^            I
I
I
I FVA-2    FVA-3    FVH4-1   FVA-32   FVA-32    I (TRANSFER BATCH TO AND FROM
I  022      023      090      091              I GLOVE BOX)
I--] [----------*--------*---] [------(051)--I FVA-32 ON
I-----------] [-^        ^                     I H4 OVERPRESSURE
I-------------------] [-^                      I
I                                              I NO 74,78
I                                              I
I
I
I FVH2-1   H3CLLS   H3CLLS   H3CLLS            I
I  014      306      306      306              I
I--]\[------] [------] [------] [------(052)--I
I
I
I                                      DIS OFF I
I-                                    --(053)--I
I
```

```
                              COATER UNLOADER-PC#1

MODICON CONTROLLER # 495      DATE 07 SEP 78          28401C

  A NODE  B NODE  C NODE  D NODE   LINE #    CROSS REFERENCE LIST


I
I                                   DIS OFF I
I-                                 --(054)--I
I
I
I HS-66   PZ-2    AUTO    STPCNT  PZ-2     I (TRANSFER SAMPLE)
I  368     055     102     210             I SAMPLE TRANSFER PUMP AUTO
I--] [---------*---] [-----]\[-----(055)--I
I----------] [-^                           I NO 27,55
I                                          I
I
I
I SEMI    SV2-LS  MANUAL  HS-45   PZ-2     I (TRANSFER SAMPLE)
I  101     319     100     332             I SAMPLE TRANSFER PUMP
I--] [-----] [---------*---] [-----(056)--I SEMIAUTO OR MANUAL
I------------------] [-^                   I
I                                          I NO 27
I                                          I
I
I
I PZ-2    AUTO    STPCNT  STPCNT  MSV1-1   I (TRANSFER SAMPLE)
I  027     102     210     210             I SAMPLE VALVE #1 OPEN/CLOSE
I--] [-----] [-----]\[-----]\[-----(057)--I AUTO MODE
I                                          I
I                                          I NO 59
I                                          I
I
I
I SEMI    PZ-2    MANUAL  HS-46   MSV1-1   I (TRANSFER SAMPLE)
I  101     027     100     333             I SAMPLE VALVE #1 SEMI OR
I--] [-----] [---------*---] [-----(058)--I MANUAL
I------------------] [-^                   I
I                                          I NO 59
I                                          I
I
I
I MSV1-1  MSV1-1  MSV1-1  MSV1-1  MSV1-1   I (TRANSFER SAMPLE)
I  057     058     058     058             I SAMPLE VALVE #1 OPEN/CLOSE
I--] [---------*-------*-------*---(059)--I ALL MODES
I----------] [-^       ^       ^           I
I------------------] [-^       ^           I NO 20,205
I--------------------------] [-^           I
I
I
I SV1-LS  MSV-1   MSV-1   MSV-1   MSV1-1   I (TRANSFER SAMPLE)
I  315     205     205     205             I SAMPLE VALVE #1 OPERATE
I--] [-----] [-----] [-----] [-----(060)--I INTERLOCK
I                                          I
I                                          I NC 20
I
```

```
                              COATER UNLOADER-PC#1

MODICON CONTROLLER # 495      DATE 07 SEP 78            28401C

  A NODE   B NODE  C NODE  D NODE   LINE #     CROSS REFERENCE LIST

I
I HS-48    FVA-2   AUTO    STPCNT  FVA-2    I (TRANSFER BATCH TO GLOVE
I  370      061     102     210             I BOX) H4 TO H5 TRANSFER GAS
I--] [---------*---] [-----]\[-----(061)--] AUTO MODE
I----------] [-^                            I
I                                           I NO 22,61
I                                           I
I
I
I FVA-3    H5CLLS  FVH5-1  FVH5-1  FVA-2    I (TRANSFER BATCH TO GLOVE
I  023      318     024     024             I BOX) H4 TO H5 TRANSFER GAS
I--]\[-----] [-----]\[-----]\[-----(062)--I AUTO AND SEMIAUTO
I                                           I
I                                           I NO 73
I                                           I
I
I
I H2OPLS   FVH2-1  FVH2-1  FVH2-1  FVA-2    I (TRANSFER BATCH TO GLOVE
I  302      011     011     011             I BOX) H4 TO H5 TRANSFER GAS
I--] [-----]\[-----]\[-----]\[-----(063)--] INTERLOCK AUTO AND SEMIAUTO
I                                           I
I                                           I NO 73
I                                           I
I
I
I SEMI     HS-49   HS-49   HS-49   FVA-2    I (TRANSFER BATCH TO GLOVE
I  101      336     336     336             I BOX)
I--] [-----] [-----] [-----] [-----(064)--I H4 TO H5 TRANSFER GAS
I                                           I SEMIAUTO MODE
I                                           I
I                                           I NO 22
I                                           I
I
I
I HS-67    FVA-3   AUTO    STPCNT  FVA-3    I (TRANSFER BATCH FOR ANOTHER
I  369      065     102     210             I COATING)
I--] [---------*---] [-----]\[-----(065)--I H4 TO H2 TRANSFER GAS AUTO
I----------] [-^                            I MODE
I                                           I
I                                           I NO 23,65,201,202
I                                           I
I
I
I H5CLLS   FVH5-1  FVH5-1  FVH5-1  FVA-3    I (TRANSFER BATCH FOR ANOTHER
I  318      024     024     024             I COATING)
I--] [-----]\[-----]\[-----]\[-----(066)--I H4 TO H2 TRANSFER GAS
I                                           I INTERLOCK
I                                           I AUTO OR SEMIAUTO MODE
I                                           I
I                                           I NO 23,70
I                                           I
I
```

COATER UNLOADER-PC#1

MODICON CONTROLLER # 495 DATE 07 SEP 78 284010

```
  A NODE   B NODE   C NODE   D NODE    LINE #     CROSS REFERENCE LIST

I
I FVA-2    FVH5-2   FVH5-2   FVH5-2   FVA-3    I (TRANSFER BATCH FOR ANOTHER
I  022      025      025      025              I COATING)
I--]\[-----]\[-----]\[-----]\[-----(067)--I H4 TO H2 TRANSFER GAS
I                                           I INTERLOCK
I                                           I AUTO OR SEMIAUTO MODE
I                                           I
I                                           I NO 23,70
I                                           I
I
I
I SEM1     HS-47    HS-47    HS-47    FVA-3    I (TRANSFER BATCH FOR ANOTHER
I  101      334      334      334              I COATING)
I--] [-----] [-----] [-----] [-----(068)--I H4 TO H2 TRANSFER GAS
I                                           I SEMIAUTO MODE
I                                           I
I                                           I NO 70
I                                           I
I
I
I MANUAL   HS-47    HS-47    HS-47    FVA-3    I (TRANSFER BATCH FOR ANOTHER
I  100      334      334      334              I COATING)
I--] [-----] [-----] [-----] [-----(069)--I H4 TO H2 TRANSFER GAS
I                                           I MANUAL MODE
I                                           I
I                                           I NO 70
I                                           I
I
I
I FVA-3    FVA-3    FVA-3    FVA-3    FVA-3    I (TRANSFER BATCH FOR ANOTHER
I  068      066      067      069              I COATING)
I--] [-----] [-----] [---------*---(070)--I H4 TO H2 TRANSFER GAS
I-------------------------] [-^               I MANUAL OR SEMIAUTO MODE
I                                           I
I                                           I NO 23
I                                           I
I
I
I FVA-3    V3-LS    MV3-1    FVH2-2   FVH4-1   I (TRANSFER BATCH FOR ANOTHER
I  023      312      019      012              I COATING)
I--] [-----] [-----]\[-----] [-----(071)--I H4 OPEN/CLOSE INTERLOCK
I                                           I AUTO MODE
I                                           I
I                                           I NO 79
I                                           I
I
```

```
                    COATER UNLOADER-PC#1

MODICON CONTROLLER # 495      DATE 07 SEP 78          28401C

  A NODE   B NODE   C NODE   D NODE    LINE #     CROSS REFERENCE LIST

I
I MANUAL   HS-49    HS-49    HS-49    FVA-2    I (TRANSFER BATCH TO GLOVE
I  100      336      336      336              I BOX) H4 TO H5 TRANSFER GAS
I--] [------] [------] [------] [------(072)--I MANUAL MODE
I                                              I
I                                              I NO 22
I                                              I
I
I
I FVA-2    FVA-2    FVA-2    FVA-2    FVA-2    I (TRANSFER BATCH TO GLOVE
I  062      063      063      063              I BOX) H4 TO H5 TRANSFER GAS
I--] [------] [------] [------] [------(073)--I INTERLOCK AUTO AND SEMIAUTO
I                                              I
I                                              I NO 22
I                                              I
I
I
I FVA-2    V3-LS    MV3-1    FVA-32   FVH4-1   I (TRANSFER BATCH TO GLOVE
I  022      312      019      051              I BOX) H4 OPEN/CLOSE INTERLOCK
I--] [------] [------]\[------] [------(074)--I AUTO OR SEMIAUTO MODE
I                                              I
I                                              I NO 75,77
I                                              I
I
I
I SEMI     HS-50    FVH4-1   FVH4-1   FVH4-1   I (TRANSFER BATCH TO GLOVE
I  101      337      074      209              I BOX) H4 OPEN/CLOSE SEMIAUTO
I--] [------] [------] [------] [------(075)--I
I                                              I NO 89
I                                              I
I
I
I MANUAL   HS-50    HS-50    HS-50    FVH4-1   I (TRANSFER BATCH TO GLOVE
I  100      337      337      337              I BOX) H4 OPEN/CLOSE MANUAL
I--] [------] [------] [------] [------(076)--I
I                                              I NO 89
I                                              I
I
I
I AUTO     FVH4-1   FVH4-1   STPCNT   FVH4-1   I (TRANSFER BATCH TO GLOVE
I  102      074      209      210              I BOX) H4 OPEN/CLOSE AUTO MODE
I--] [------] [------] [------]\[------(077)--I
I                                              I NO 89
I                                              I
I
```

```
                              COATER UNLOADER-PC#1

MODICON CONTROLLER # 495      DATE 07 SEP 78            264017

  A NODE   B NODE   C NODE   D NODE    LINE #     CROSS REFERENCE LIST


I
I FVA-32   H2OPLS   FVA-31   H1OPLS   FVH4-1   I (TRANSFER BATCH FOR ANOTHER
I  051      302      050      320             I COATING)
I--] [-----] [-----] [-----] [-----(078)--]I H4 OPEN/CLOSE INTERLOCK
I                                            I AUTO MODE
I                                            I
I                                            I NO 79
I                                            I
I
I
I FVH4-1   FVH4-1   FVH4-1   FVH4-1   FVH4-1   I (TRANSFER BATCH FOR ANOTHER
I  071      078      078      078             I COATING) H4 OPEN CLOSE
I--] [-----] [-----] [-----] [-----(079)--]I INTERLOCK=INTERLOCK LINES
I                                            I 71 "AND" 78
I                                            I
I                                            I NO 88,122
I                                            I
I
I
I FVH4-1   FVH4-1   FVH4-1   FVH4-1   FVH4-1   I (TRANSFER BATCH FOR ANOTHER
I  122      121      121      121             I COATING) H4 OPEN/CLOSE
I--] [---------*-------*-------*---(080)--]I DRIVES OUTPUT 2)
I----------] [-^        ^        ^           I
I------------------] [-^        ^           I NO 89,90
I--------------------------] [-^            I
I
I
I HS-70    MSV2-1   AUTO     STPTIM   MSV2-1   I (UNLOAD SAMPLE)
I  372      081      102      212             I SAMPLE VALVE #2 OPEN/CLOSE
I--] [---------*---] [-----]\[-----(081)--]I AUTO MODE
I----------] [-^                             I
I                                            I NO 81,83,212
I                                            I
I
I
I SEMI     MANUAL   HS-72    HS-72    MSV2-1   I (UNLOAD SAMPLE)
I  101      100      374      374             I SAMPLE VALVE #2 OPEN/CLOSE
I--] [---------*---] [-----] [-----(082)--]I SEMIAUTO OR MANUAL MODE
I----------] [-^                             I
I                                            I NO 83
I                                            I
I
I
I MSV2-1   MSV2-1   MSV2-1   MSV2-1   MSV2-1   I (UNLOAD SAMPLE)
I  081      082      082      082             I SAMPLE VALVE #2 OPEN/CLOSE
I--] [---------*-------*-------*---(083)--]I ALL MODES
I----------] [-^        ^        ^           I
I------------------] [-^        ^           I NO 36,207
I--------------------------] [-^            I
I
```

```
                         COATER UNLOADER-PC#1

MODICON CONTROLLER # 495      DATE 07 SEP 78          28401C

  A NODE   B NODE   C NODE   D NODE    LINE #     CROSS REFERENCE LIST

I
I SV2-LS   MSV-2    MSV-2    MSV-2    MSV2-1   I (UNLOAD SAMPLE)
I  319      207      207      207              I SAMPLE VALVE #2 OPEN CLOSE
I--] [-----] [-----] [-----] [-----(084)---I INTERLOCK ALL MODES
I                                             I
I                                             I NO 26
I
I
I HS-71    FVH5-1   AUTO     STPCNT   FVH5-1   I (UNLOAD BATCH)
I  373      085      102      210              I H5 OPEN/CLOSE
I--] [----------*---] [-----]\[-----(085)---I AUTO MODE
I----------] [-^                              I
I                                             I NO 24,85,208
I                                             I
I
I
I SEMI     MANUAL   HS-73    HS-73    FVH5-1   I (UNLOAD BATCH)
I  101      100      375      375              I H5 OPEN/CLOSE MANUAL OR
I--] [----------*---] [-----] [-----(086)---I SEMIAUTO MODE
I----------] [-^                              I
I                                             I NO 24
I                                             I
I
I
I SV2-LS   SV2-LS   SV2-LS   SV2-LS   P7-2     I (TRANSFER SAMPLE)
I  319      319      319      319              I SAMPLE TRANSFER PUMP
I--] [-----] [-----] [-----] [-----(087)---I INTERLOCK AUTO MODE,OPERATED
I                                             I BY MSV2-1 LIMIT SWITCH 319
I                                             I
I                                             I NO 27
I                                             I
I
I
I SEMI     FVH4-1   HS-48    FVH4-1   FVH4-1   I (TRANSFER BATCH FOR ANOTHER
I  101      079      335      202              I COATING)
I--] [-----] [-----] [-----] [-----(088)---I H4 OPEN/CLOSE SEMIAUTO MODE
I                                             I
I                                             I NO 122
I                                             I
I
I
I FVH4-1   FVH4-1   FVH4-1   FVH4-1   FVH4-1   I (TRANSFER BATCH TO GLOVE
I  077      075      080      076              I BOX)
I--] [---------*--------*--------*---(089)---I H4 OPEN/CLOSE ALL MODES
I----------] [-^        ^        ^            I
I-------------------] [-^        ^            I NO 21
I-------------------------] [-^               I
I
```

```
                         COATER UNLOADER-PC#1

MODICON CONTROLLER # 495      DATE 07 SEP 78            284010

  A NODE   B NODE   C NODE   D NODE    LINE #     CROSS REFERENCE LIST

I
I FVA-1    V3-LS    MV3-1    FVH4-1   FVH4-1   I (TRANSFER FROM GLOVE BOX)
I  029      312      019      080             I H4 OPEN/CLOSE ALL MODES
I--] [------] [------]\[----------*----(090)--I
I-----------------------------] [-^           I NO 21.51
I                                             I
I
I
I MV3-1    V3-LS    V3-LS    V3-LS    FVA-32   I (TRANSFER BATCH TO GLOVE
I  019      312      312      312             I BOX)
I--]\[------] [------] [------] [------(091)--I H4 OVERPRESSURE INTERLOCK
I                                             I
I                                             I NO 51
I                                             I
I
I
I HS-1     HS-2     HS-9     HS-10    H S ON   I HAND SWITCH "OR"
I  323      324      325      326             I NO 93
I--] [----------*--------*--------*----(092)--I
I-----------] [-^        ^        ^           I
I-------------------] [-^        ^           I
I-----------------------------] [-^           I
I
I
I H S ON   HS-40    HS-41    HS-42    H S ON   I HAND SWITCH "OR"
I  092      327      328      329             I NO 94
I--] [----------*--------*--------*----(093)--I
I-----------] [-^        ^        ^           I
I-------------------] [-^        ^           I
I-----------------------------] [-^           I
I
I
I H S ON   HS-43    HS-44    HS-45    H S ON   I HAND SWITCH "OR"
I  093      330      331      332             I NO 95
I--] [----------*--------*--------*----(094)--I
I-----------] [-^        ^        ^           I
I-------------------] [-^        ^           I
I-----------------------------] [-^           I
I
I
I H S ON   HS-46    HS-47    HS-48    H S ON   I HAND SWITCH "OR"
I  094      333      334      335             I NO 96
I--] [----------*--------*--------*----(095)--I
I-----------] [-^        ^        ^           I
I-------------------] [-^        ^           I
I-----------------------------] [-^           I
I
```

```
                                  COOTER UNLOADER-RC#1

MODICON CONTROLLER # 495        DATE 07 SEP 78              284010

  A NODE   B NODE   C NODE   D NODE    LINE #     CROSS REFERENCE LIST


I
I H S ON   HS-49    HS-50              H S ON   I HAND SWITCH "OR"
I  095      336      337      338              I NO 97
I--] [-----------*---------*---------*----(096)--I
I-----------] [-^         ^         ^           I
I-----------------------] [-^         ^           I
I-----------------------------------] [-^         I
I
I
I H S ON                                H S ON   I HAND SWITCH "OR"
I  096      339      340      341              I NO 98
I--] [-----------*---------*---------*----(097)--I
I-----------] [-^         ^         ^           I
I-----------------------] [-^         ^           I
I-----------------------------------] [-^         I
I
I
I H S ON                                H S ON   I HAND SWITCH "OR"
I  097      342      343      344              I NO 99
I--] [-----------*---------*---------*----(098)--I
I-----------] [-^         ^         ^           I
I-----------------------] [-^         ^           I
I-----------------------------------] [-^         I
I
I
I H S ON   HS-72    HS-73    HS-73    H S ON   I HAND SWITCH CONTROLS
I  098      374      375      375              I AT LEAST ONE HAND SWITCH HAS
I--] [-----------*---------*---------*----(099)--I TO BE ON FOR ONE OF THE
I-----------] [-^         ^         ^           I LINES 92 THROUGH 99 FOR ANY
I-----------------------] [-^         ^           I MODE TO OPERATE
I-----------------------------------] [-^         I
I                                                I NC 100-102
I
I
I H S ON   MANUAL   HS-55C   HS-55C   MANUAL   I MANUAL MODE LATCH
I  099      100      363      363              I NO 3,41,56,58,69,72,76,82,
I--]\[-----------*----] [------] [------(100)--I  86,100,112,116,118,119,121
I-----------] [-^                                I
I
I
I H S ON   SEMI     HS-55B   HS-55B   SEMI     I SEMIAUTO MODE LATCH
I  099      101      362      362              I NO 4,6,10,49,56,58,64,68,75,
I--]\[-----------*----] [------] [------(101)--I  82,86,88,101,112,113
I-----------] [-^                                I
I
```

```
                    COATER UNLOADER-PC#1

MODICON CONTROLLER # 495      DATE 07 SEP 78            284010

  A NODE   B NODE   C NODE   D NODE    LINE #     CROSS REFERENCE LIST


I
I H S ON  AUTO     HS-55A   HS-55A   AUTO      I AUTO MODE LATCH
I  099     102      361      361               I NO 2,7,8,42,55,57,61,65,77,
I--]\[----------*---] [-----] [------(102)--I   81,85,102,105,107,120,122
I----------] [-^                               I
I
I
I MV3-1    V3-LS    V3-LS    V3-LS    MV3-1    I (SAMPLE BATCH)
I  109     312      312      312               I V3 OPEN/CLOSE ALL MODES
I--] [------] [------] [------] [------(103)--I
I                                              I NO 19
I                                              I
I
I
I MV3-1    V3-LS    V3-LS    V3-LS    MV3-1    I (SAMPLE BATCH)
I  109     312      312      312               I V3 OPEN/CLOSE ALL MODES
I--]\[------]\[------]\[------]\[------(104)--I
I                                              I NO 19
I                                              I
I
I
I          HS-6A    HS-71    AUTO              I STOP COUNTER INCREMENT AND
I  111     368      373      102               I RESET CONTROL
I--] [----------*--------*---] [------(105)--I
I----------] [-^        ^                      I NO 211
I-------------------] [-^                      I NC 210
I
I
I V2-LS    V3-LS    V3-LS    V3-LS    FVH3-1   I (SAMPLE BATCH)
I  307     312      312      312               I H3 OPEN/CLOSE INTERLOCK
I--]\[------]\[------]\[------]\[------(10A)--I AUTO AND SEMIAUTO MODE
I                                              I
I                                              I NO 120
I                                              I
I
I
I HS-45    MV3-1    AUTO     STPCNT   MV3-1    I (SAMPLE BATCH)
I  367     107      102      210               I V3 OPEN/CLOSE AUTO MODE
I--] [----------*---] [------]\[------(107)--I
I----------] [-^                               I NO 107,109
I                                              I
I
I
I H4CLLS   SV1-LS   SV1-LS   SV1-LS   MV3-1    I (SAMPLE BATCH)
I  314     315      315      315               I V3 OPEN/CLOSE INTERLOCK
I--] [------] [------] [------] [------(108)--I AUTO OR SEMIAUTO MODE
I                                              I
I                                              I NO 109,112,113
I                                              I
I
```

```
                         COATER UNLOADER-PC#1

MODICON CONTROLLER # 495      DATE 07 SEP 78          28401C

  A NODE   B NODE   C NODE   D NODE    LINE #     CROSS REFERENCE LIST

I
I MV3-1    MV3-1    MV3-1    MV3-1    MV3-1     I (SAMPLE BATCH)
I  107      108      112      112               I MV2-1V2,V3,OPEN/CLOSE INTERL
I--] [------] [----------*--------*----(109)---I OCK
I-------------------] [-^        ^              I
I-----------------------------] [-^             I NO 103,114,120
I                                               I NC 104,115
I
I
I HS-56    HS-58    HS-58                       I AUTO PUSHBUTTON "OR"
I  364      365      365      366               I NO 111
I--] [---------*--------*--------*----(110)---I
I----------] [-^        ^        ^              I
I-------------------] [-^        ^              I
I-----------------------------] [-^             I
I
I
I          HS-65    HS-67    HS-68              I AUTO PUSHBUTTON "OR"
I  110      367      369      370               I NO 105
I--] [---------*--------*--------*----(111)---I
I----------] [-^        ^        ^              I
I-------------------] [-^        ^              I
I-----------------------------] [-^             I
I
I
I SEMI     MV3-1    MANUAL   HS-43    MV3-1     I (SAMPLE BATCH)
I  101      108      100      330               I V3 OPEN/CLOSE MANUAL OR
I--] [------] [----------*----] [------(112)--I SEMIAUTO MODE
I-------------------] [-^                      I
I                                               I NO 109
I                                               I
I
I
I MV3-1    SEMI     HS-44    HS-44    FVH3-1    I (SAMPLE BATCH)
I  108      101      331      331               I H3 OPEN/CLOSE SEMIAUTO
I--] [------] [------] [------] [------(113)--I MODE
I                                               I
I                                               I NO 120
I                                               I
I
I
I MV3-1    V2-LS    V2-LS    V2-LS    MV2-1     I (SAMPLE BATCH)
I  109      307      307      307               I V2 OPEN/CLOSE ALL MODES
I--] [------] [------] [------] [------(114)--I
I                                               I NO 16
I                                               I
I
```

```
                                COATER (MODADER-PC#1)

MODICON CONTROLLER # 495        DATE 07 SEP 78              284010

  A MODE   B MODE   C MODE   D MODE    LINE #     CROSS REFERENCE LIST

I
I MVS-1    V2-1 A   V2-1 B   V2-1 C    MV2-1     I (SAMPLE BATCH)
I  109      307      307      307                I V2 OPEN/CLOSE ALL MODES
I--]\[------]\[------]\[------]\[------(115)---I
I                                                I NO 16
I                                                I
I
I
I MANUAL   HS-2     HS-2     HS-2     FVH1-1    I (TRANSFER FROM GLOVE BOX)
I  100      324      324      324                I H1 OPEN/CLOSE MANUAL MODE
I--] [------] [------] [------] [------(116)---I
I                                                I NO 28
I                                                I
I
I
I FVA1-1   FVH1-1   FVH1-1   FVA-3    FVH1-1    I (TRANSFER FROM GLOVE BOX)
I  047      048      049      023                I H1 OPEN/CLOSE AUTO AND
I--] [------] [-----------------------*---(117)---I SEMIAUTO MODES
I-------------------] [-^          ^             I
I-----------------------------------] [-^        I NO 28
I                                                I
I
I
I MANUAL   HS-10    HS-10    HS-10    FVH2-1    I (CHARGE COATER)
I  100      32A      32A      32A                I H2 OPEN/CLOSE MANUAL MODE
I--] [------] [------] [------] [------(118)---I
I                                                I NO 11
I                                                I
I
I
I MANUAL   HS-44    HS-44    HS-44    FVH3-1    I (SAMPLE BATCH)
I  100      331      331      331                I H3 OPEN/CLOSE MANUAL MODE
I--] [------] [------] [------] [------(119)---I
I                                                I NO 14
I                                                I
I
I
I AUTO     MVS-1    FVH3-1   FVH3-1   FVH3-1    I (SAMPLE BATCH)
I  102      109      113      106                I H3 OPEN/CLOSE AUTO OR
I--] [------] [----------*---] [------(120)---I SEMIAUTO
I-------------------] [-^                        I
I                                                I NO 14
I                                                I
I
I
I MANUAL   HS-48    HS-48    HS-48    FVH4-1    I (TRANSFER BATCH FOR ANOTHER
I  100      335      335      335                I COATING)
I--] [------] [------] [------] [------(121)---I H4 OPEN/CLOSE MANUAL MODE
I                                                I
I                                                I NO 80
I                                                I
I
```

COATER UNLOADER-PC#1

MODICON CONTROLLER # 495 DATE 07 SEP 78 28401C

```
  A NODE   B NODE   C NODE   D NODE    LINE #     CROSS REFERENCE LIST

I
I AUTO     FVH4-1   FVH4-1   FVH4-1   FVH4-1   I (TRANSFER BATCH FOR ANOTHER
I  102      202      079      088              I COATING)
I--] [------] [------] [----------*----(122)--I H4 OPEN/CLOSE AUTO OR
I-----------------------------] [-^            I SEMIAUTO MODE
I                                              I
I                                              I NO 80
I                                              I
I
I
I                                   DIS OFF I
I-                                 --(123)--I
I
I
I                                   DIS OFF I
I-                                 --(124)--I
I
I
I                                   DIS OFF I
I-                                 --(125)--I
I
I
I                                   DIS OFF I
I-                                 --(126)--I
I
I
I                                   DIS OFF I
I-                                 --(127)--I
I
I
I                                   DIS OFF I
I-                                 --(128)--I
I
I
I                                   DIS OFF I
I-                                 --(129)--I
I
I
I                                   DIS OFF I
I-                                 --(130)--I
I
I
I                                   DIS OFF I
I-                                 --(131)--I
I
```

COATER UNLOADER-PC#1

MODICON CONTROLLER # 495 DATE 07 SEP 78 28401C

A NODE	B NODE	C NODE	D NODE	LINE #	CROSS REFERENCE LIST
				DIS OFF	
				--(132)--	
				DIS OFF	
				--(133)--	
				DIS OFF	
				--(134)--	
				DIS OFF	
				--(135)--	
				DIS OFF	
				--(136)--	
				DIS OFF	
				--(137)--	
				DIS OFF	
				--(138)--	
				DIS OFF	
				--(139)--	
				DIS OFF	
				--(140)--	
				DIS OFF	
				--(141)--	
				DIS OFF	
				--(142)--	
				DIS OFF	
				--(143)--	

COATER UNLOADER-PC#1

MODICON CONTROLLER # 495 DATE 07 SEP 78 2S401C

A NODE	B NODE	C NODE	D NODE	LINE #	CROSS REFERENCE LIST
I					
I					DIS OFF I
I-					--(144)--I
I					
I					
I					DIS OFF I
I-					--(145)--I
I					
I					
I					DIS OFF I
I-					--(146)--I
I					
I					
I					DIS OFF I
I-					--(147)--I
I					
I					
I					DIS OFF I
I-					--(148)--I
I					

```
                         COATER UNLOADER-PC#1

MODICON CONTROLLER # 495      DATE 07 SEP 78          28401C

  A NODE   B NODE   C NODE   D NODE    LINE #     CROSS REFERENCE LIST

I
I FVA-3    FVA-3                                  I
I  023      065   I-CONST-I--------I              I
I--] [-----------I        I        I--(201)--I
I-----------] [--I-005 0-I--------I   TIMER     I
I
I
I FVA-3    FVA-3                        FVH4-1    I (TRANSFER BATCH FOR ANOTHER
I  023      065   I-CONST-I--------I              I COATING)
I--] [-----------I        I        I--(202)--I H4 OPEN/CLOSE TIME DELAY
I-----------] [--I-050 0-I--------I   TIMER     I SEMIAUTO MODE
I                                                I
I                                                I NO 88,122
I                                                I
I
I
I FVA-1    FVA-1                                  I
I  029      029   I-CONST-I--------I              I
I--]\[-----------I        I        I--(203)--I
I-----------]\[--I-025 0-I--------I   TIMER     I
I
I
I FVA-1    FVA-31                       FVH1-1    I (TRANSFER FROM GLOVE BOX)
I  029      008   I-CONST-I--------I              I H1 VALVE TIMER
I--] [-----------I        I        I--(204)--I SEMIAUTO MODE
I-----------] [--I-025 0-I--------I   TIMER     I
I                                                I NO 42,49
I                                                I
I
I
I MSV1-1   MSV1-1                       MSV-1     I (TRANSFER SAMPLE)
I  020      059   I-CONST-I--------I              I SAMPLE VALVE #1,TIMER
I--] [-----------I        I        I--(205)--I
I-----------] [--I-010 0-I--------I   TIMER     I NO 60
I                                                I
I
I
I FVH1-1   FVA-31                                I
I  028      008   I-CONST-I--------I              I
I--] [-----------I        I        I--(206)--I
I-----------] [--I-099 9-I--------I   TIMER     I
I
I
I MSV2-1   MSV2-1                       MSV-2     I (UNLOAD SAMPLE)
I  026      083   I-CONST-I--------I              I SAMPLE VALVE #2,TIMER
I--] [-----------I        I        I--(207)--I
I-----------] [--I-004.0-I--------I   TIMER     I NO 84
I                                                I
I
```

COATER UNLOADER-PC#1

MODICON CONTROLLER #.495 DATE 07 SEP 78 28401C

```
  A NODE   B NODE   C NODE   D NODE    LINE #     CROSS REFERENCE LIST

I
I FVH5-1   FVH5-1                                I
I  024      085   I-CONST-I--------I            I
I--] [-----------I         I         I--(208)--I
I-----------] [--I-075 0-I--------I   TIMER    I
I
I
I FVA-2    FVA-2                      FVH4-1    I (TRANSFER BATCH TO GLOVE
I  022      022   I-CONST-I--------I            I BOX) H4 VALVE TIMER
I--] [-----------I         I         I--(209)--I
I-----------] [--I-010 0-I--------I   TIMER    I NO 75,77
I                                                I
I
I
I           STPCNR                     STPCNT    I STOP COUNTER
I  105      211   I-CONST-I--------I            I NO 211
I--]\[-----------I         I         I--(210)--I NC 2,7,8,42,55,57,61,65,77,
I-----------]\[--I-0002--I--------I COUNTER I   85,107
I
I
I           STPCNT                     STPCNR    I STOP COUNTER RESET
I  105      210   I-CONST-I--------I            I NC 210
I--] [-----------I         I         I--(211)--I
I-----------] [--I-0001--I--------I COUNTER I
I
I
I MSV2-1   MSV2-1                     STPTIM    I (UNLOAD SAMPLE)
I  026      081   I-CONST-I--------I            I STOP TIMER
I--] [-----------I         I         I--(212)--I
I-----------] [--I-060 0-I--------I   TIMER    I NC 81
I
I
I                                     DIS OFF I
I-                                   --(213)--I
I
I
I                                     DIS OFF I
I-                                   --(214)--I
I
I
I                                     DIS OFF I
I-                                   --(215)--I
I
I
I                                     DIS OFF I
I-                                   --(216)--I
I
```

COATER UNLOADER-PC#1

MODICON CONTROLLER # 495 DATE 07 SEP 78 28401C

A NODE	B NODE	C NODE	D NODE	LINE #	CROSS REFERENCE LIST
I					
I				DIS OFF I	
I-				--(217)--I	
I					
I					
I				DIS OFF I	
I-				--(218)--I	
I					
I					
I				DIS OFF I	
I-				--(219)--I	
I					
I					
I				DIS OFF I	
I-				--(220)--I	
I					
I					
I				DIS OFF I	
I-				--(221)--I	
I					

COATER UNLOADER-PC#1

MODICON CONTROLLER # 495 DATE 07 SEP 78 284010

INPUT CROSS REFERENCE LIST

302 H2OPLS H2 CLOSED LIMIT SWITCH
NO 1,9,63,78

303 V1OPLS V1 OPEN LIMIT SWITCH
NO 11

306 H3CLLS H3 CLOSED LIMIT SWITCH
NO 52

307 V2-LS V2 OPEN/CLOSED LIMIT SWITCH
NO 114
NC 106,115

312 V3-LS V3 OPEN/CLOSED LIMIT SWITCH
NO 71,74,90,91,103
NC 104,106

314 H4CLLS H4 CLOSED LIMIT SWITCH
NO 108

315 SV1-LS SV1 OPEN/CLOSED LIMIT SWITCH
NO 60,108

318 H5CLLS H5 CLOSED LIMIT SWITCH
NO 62,66

319 SV2-LS SV2 OPEN/CLOSED LIMIT SWITCH
NO 56,84,87

320 H1OPLS H1 OPEN LIMIT SWITCH
NO 78

323 HS-1 H1 TO H2 TRANSFER GAS ON/OFF
NO 10,41,92

324 HS-2 HOPPER H1 OPEN/CLOSE
NO 49,92,116

325 HS-9 VALVE V1 OPEN/CLOSE
NO 3,4,92

COATER UNLOADER-PC#1

MODICON CONTROLLER # 495 DATE 07 SEP 78 Z8401C

INPUT CROSS REFERENCE LIST

326 HS-10 HOPPER H2 OPEN/CLOSE
NO 6,92,119

327 HS-40 CALIBRATE WT DOWN/UP
NO 93

328 HS-41 VALVE V2 OPEN/CLOSE
NO 93

329 HS-42 VALVE H3 OPEN/CLOSE
NO 93

330 HS-43 BLOCK VALVE V3 OPEN/CLOSE
NO 94,117

331 HS-44 HOPPER VALVE W1 OPEN/CLOSE
NO 94,113,119

332 HS-45 SAMPLE TRANSFER PUMP PZ-7 ON/OFF
NO 56,94

333 HS-46 SAMPLE VALVE #1 OPEN/CLOSE
NO 58,95

334 HS-47 OPERATE OVERPRESSURE #2-FV-A11 ON/OFF
NO 68,69,95

335 HS-48 HOPPER H4 VALVE OPEN/CLOSE
NO 88,95,121

336 HS-49 OPERATE HIGH PURGE #2 FV-A3 ON/OFF
NO 64,72,96

337 HS-50 HOPPER H4 VALVE OPEN/CLOSE
NO 75,76,96

338 NO 96

COATER UNLOADER-PC#1

MODICON CONTROLLER # 495 DATE 07 SEP 78 38401C

INPUT CROSS REFERENCE LIST

339 NO 97

340 NO 97

341 NO 97

342 NO 98

343 NO 98

344 NO 98

361 HS-55A AUTOMATIC MODE SWITCH
NO 102

362 HS-55B SEMIAUTOMATIC MODE SWITCH
NO 101

363 HS-55C MANUAL MODE SWITCH
NO 100

364 HS-56 AUTO: TRANSFER FROM GLOVE BOX
NO 8, 110

365 HS-58 AUTO: CHARGE COATER
NO 2, 110

366 NO 110

367 HS-65 AUTO: SAMPLE BATCH
NO 107, 111

368 HS-66 AUTO: TRANSFER SAMPLE
NO 55, 105

COATER UNLOADER-PC#1

MODICON CONTROLLER # 495 DATE 07 SEP 78 284010

INPUT CROSS REFERENCE LIST

369 HS-67 AUTO TRANSFER BATCH FOR ANOTHER COAT
NO 65.111

370 HS-68 AUTO TRANSFER BATCH TO GLOVE BOX
NO 61.111

372 HS-70 AUTO PURGE SYSTEM
NO 81

373 HS-71 AUTO UNLOAD BATCH
NO 85.105

374 HS-72 SAMPLE VALVE #2 ON/OFF
NO 82.99

375 HS-73 H5 OPEN/CLOSE
NO 86.99

379 PC2-40 PLC2-PLC1 READY
NO 1.5

COATER UNLOADER-PC#1

MODICOM CONTROLLER # 495 DATE 07 SEP 78 28401C

DISABLED LINES

015 OFF
017 OFF
018 OFF
030 OFF
031 OFF
032 OFF
033 OFF
034 OFF
035 OFF
036 OFF
037 OFF
038 OFF
039 OFF
040 OFF
043 OFF
044 OFF
046 OFF
047 OFF
053 OFF
054 OFF
123 OFF
124 OFF
125 OFF
126 OFF
127 OFF
128 OFF
129 OFF
130 OFF
131 OFF
132 OFF
133 OFF
134 OFF
135 OFF
136 OFF
137 OFF
138 OFF
139 OFF
140 OFF
141 OFF
142 OFF
143 OFF
144 OFF
145 OFF
146 OFF
147 OFF
148 OFF
213 OFF
214 OFF
215 OFF
216 OFF

COATER UNLOADER-PC#1

MODICON CONTROLLER # 495 DATE 07 SEP 78 28401C

DISABLED LINES

217 OFF
218 OFF
219 OFF
220 OFF
221 OFF

```
                              COATER UNLOADER-PC#2

MODICON CONTROLLER # 508      DATE 29 AUG 78            28401C

  A NODE   B NODE   C NODE   D NODE    LINE #     CROSS REFERENCE LIST


I
I           HS-57    HS-55A                      I LOAD CRUCIBLE INTO FURNANCE
I  001      362      359      707                I AUTO LATCH
I--] [----------*----] [------]\[------(001)--I
I------------] [-^                               I NO 1,6,8-10,48,66,67,142
I                                                I
I
I
I                    HS-55B   HS-55B              I PICKUP NEW CRUCIBLE SEQUENCE
I  10A      70A      360      360                I CLEAR CONDITION
I--] [------] [----------*--------*---(002)--I
I--------------------] [-^        ^               I NO 4,119
I-----------------------------] [-^               I
I
I
I                                                I MANIPULATOR EXTEND TO LOAD
I  057      703      080      076                I UNLOAD CRUCIBLE AND BATCH
I--] [------] [----------*---] [------(003)--I
I--------------------] [-^                       I NO 77
I                                                I
I
I
I                    HS-55B                      I REMOVE USED CRUCIBLE SEQ
I  078      707      360      002                I CLEAR CONDITION
I--] [------] [----------*--------*---(004)--I
I--------------------] [-^        ^               I NO 56,127
I-----------------------------] [-^               I
I
I
I ROT-EL   ELVDN    GRIPCL   WRSTUP               I MANIPULATOR EXTEND TO LOAD
I  313      303      307      304                I INTERLOCK(LOAD CRUCIBLE INTO
I--] [------] [------] [------] [------(005)--I FURNACE)
I                                                I
I                                                I NO 142
I                                                I
I
I
I                             MANEXT             I ELEVATOR UP TO LOAD
I  001      702      007      308                I (LOAD CRUCIBLE INTO FURNANCE
I--] [------] [----------*---] [------(006)--I )
I-------------------] [-^                        I
I                                                I NO 68
I                                                I
I
I
I HS-55B   ELVLD    HS-4     HS-4                I ELEVATOR UP TO LOAD,SEMI,
I  360      302      324      324                I AUTO(LOAD CRUCIBLE INTO
I--] [------]\[------] [------] [------(007)--I FURNACE)
I                                                I
I                                                I NO 6
I                                                I
I
```

COATER UNLOADER-PC#2

MODICON CONTROLLER # 508 DATE 29 AUG 78 28401C

```
  A NODE   B NODE   C NODE   D NODE    LINE #     CROSS REFERENCE LIST

I
I                            MANRET             I ELEVATOR UP TO FURNACE,SEMI,
I  001      706      058      311               I AUTO(LOAD CRUCIBLE INTO
I--] [------] [----------*---] [------(008)--I FURNACE)
I--------------------] [-^                      I
I                                               I NO 68
I                                               I
I
I
I                                               I MANIPULATOR RETRACT TO LOCK
I  001      703      041      042               I (LOAD CRUCIBLE INTO FURNACE)
I--] [------] [----------*---] [------(009)--I
I--------------------] [-^                      I NO 81
I                                               I
I
I
I                            GRIPOP             I MANIPULATOR RETRACT TO DUMP
I  001      705      107      306               I (LOAD CRUCIBLE INTO FURNACE)
I--] [------] [----------*---] [------(010)--I
I--------------------] [-^                      I NO 81
I                                               I
I
I
I HS-55C  HS-4                        ELV-UP    I ELEVATOR UP DRIVE
I  361      324      068      068               I NO 13
I--] [------] [----------*--------*---(011)--I NC 39
I--------------------] [-^        ^             I
I-----------------------------] [-^             I
I
I
I HS-55C  HS-11                       ELV-DN    I ELEVATOR DOWN DRIVE
I  361      329      073      075               I NO 13
I--] [------] [----------*--------*---(012)--I NC 39
I--------------------] [-^        ^             I
I-----------------------------] [-^             I
I
I
I ELV-UP  ELV-DN  ELV-DN  ELV-DN  ELVBRK         I ELEVATOR BRAKE
I  011      012      012      012               I
I--] [----------*--------*--------*---(013)--I
I-----------] [-^        ^        ^             I
I--------------------] [-^        ^             I
I----------------------------] [-^              I
I
I
I WRSTDN  WRSTDR  WRSTUP              WRSTDR    I WRIST DIRECTION (OFF=DUMP)
I  305      014      304      371               I NO 14,17
I--] [----------*---]\[----------*---(014)--I NC 16
I-----------] [-^                ^              I
I----------------------------]\[-^              I
I
```

COATER UNLOADER-PC#2

MODICON CONTROLLER # 508 DATE 29 AUG 78 28401C

```
  A NODE   B NODE   C NODE   D NODE    LINE #     CROSS REFERENCE LIST

I
I HS-24    WRSTUP   HS-23    WRSTMN   WRSTON   I WRIST ON/OFF
I  342      304      341      024              I
I--] [------]\[----------*--------*---(015)--I
I--------------------] [-^        ^            I
I-----------------------------] [-^            I
I
I
I WRSTDR   WRSTDR   WRSTDR   WRSTDR   WRSTSP   I WRIST SPEED "A"
I  014      014      014      014              I
I--]\[------]\[------]\[------]\[------(016)--I
I
I
I WRSTDR                                WRSTSP   I WRIST SPEED "B"
I  014      211      211      211              I
I--] [----------*--------*--------*---(017)--I
I-----------] [-^        ^        ^            I
I--------------------] [-^        ^            I
I-----------------------------] [-^            I
I
I
I HS-55C   HS-15                        GRIPCL   I CLOSE GRIP
I  361      333      084      085              I
I--] [------] [----------*--------*---(018)--I
I--------------------] [-^        ^            I
I-----------------------------] [-^            I
I
I
I HS-55C   HS-6                         GRIPOP   I OPEN GRIP
I  361      326      048      049              I
I--] [------] [----------*--------*---(019)--I
I--------------------] [-^        ^            I
I-----------------------------] [-^            I
I
I
I HS-55C   HS-3                         MANEXT   I MANIPULATOR EXTEND OUTPUT
I  361      323      077      135              I NO 109
I--] [------] [----------*--------*---(020)--I
I--------------------] [-^        ^            I
I-----------------------------] [-^            I
I
I
I HS-55C   HS-5                         MANRET   I MANIPULATOR RETRACT OUTPUT
I  361      325      081      116              I NO 42
I--] [------] [----------*--------*---(021)--I NC 90
I--------------------] [-^        ^            I
I-----------------------------] [-^            I
I
```

```
                         COATER UNLOADER-PC#2

MODICON CONTROLLER # 508      DATE 29 AUG 78          28401C

  A NODE   B NODE   C NODE   D NODE    LINE #     CROSS REFERENCE LIST

I
I HS-55C   HS-35                       MANROT   I MANIPULATOR ROTATE TO
I  361      353      140      140               I ELEVATOR OUTPUT
I--] [------] [----------*--------*---(022)--I
I-------------------] [-^        ^            I
I-------------------------------] [-^          I
I
I
I HS-55C   HS-17                       MAN-UP   I MANIPULATOR UP DRIVE
I  361      335      089      112               I NO 87,91,113,202
I--] [------] [----------*--------*---(023)--I
I-------------------] [-^        ^            I
I-------------------------------] [-^          I
I
I
I          HS-55C   ROT-EL   MANRET   WRSTMN   I WRIST ON/OFF NOT MANUAL
I  045      361      313      311               I NO 15
I--] [------]\[------] [------] [------(024)--I
I
I
I ALSEAL                               AL-ROT   I AIRLOCK ROTATE
I  028      209      209      209               I NO 207
I--] [------] [------] [------] [------(025)--I
I
I
I HS-55C   HS-37    HS-38              PLATUP   I AIRLOCK PLATFORM UP OUTPUT
I  361      356      357      054               I NO 33
I--] [------] [------]\[----------*---(026)--I
I-------------------------------] [-^          I
I
I
I          HATCH                       HATCH    I AIRLOCK HATCH OPEN OUTPUT
I  052      027      051      053               I NO 27
I--] [----------*---]\[----------*---(027)--I
I-----------] [-^                  ^            I
I-------------------------------] [-^          I
I
I
I HS-55C   HS-31                       ALSEAL   I AIRLOCK SEAL OUTPUT
I  361      349      132      132               I NO 25,209
I--] [------] [----------*--------*---(028)--I NC 52
I-------------------] [-^        ^            I
I-------------------------------] [-^          I
I
I
I                                      DIS OFF I
I-                                    --(029)--I
I
```

```
                              COATER UNLOADER-PC#2

MODICON CONTROLLER # 508      DATE 29 AUG 78            28401C

  A NODE   B NODE   C NODE   D NODE    LINE #     CROSS REFERENCE LIST


I
I                                      DIS OFF I
I-                                    --(030)--I
I
I
I                                      DPXFER  I VALVES IN DP TRANSMITTER FOR
I  047      047      047      047              I BATCH VACUUM TRANSFER FLOW
I--] [-----] [-----] [-----] [-----(031)--I
I                                              I
I
I
I HS-55B  HS-38            HTCHOP              I PLATFORM DOWN CONDITION
I  360      357      206      320              I NC 54
I--] [-----] [---------*-------*---(032)--I
I-----------------] [-^        ^               I
I--------------------------]\[-^               I
I
I
I          PLATUP  PLATUP  PLATUP              I AIRLOCK PLATFORM UP AUTO
I  205      026      026      026              I LATCH
I--] [---------*-------*-------*---(033)--I
I----------] [-^        ^        ^             I NO 54
I-------------------] [-^        ^             I
I--------------------------] [-^               I
I
I
I                                      DIS OFF I
I-                                    --(034)--I
I
I
I                                      DIS OFF I
I-                                    --(035)--I
I
I
I                                      DIS OFF I
I-                                    --(036)--I
I
I
I                                      DIS OFF I
I-                                    --(037)--I
I
I
I                                      DIS OFF I
I-                                    --(038)--I
I
```

```
                              COATER UNLOADER-PC#2

MODICON CONTROLLER # 508      DATE 29 AUG 78            28401C

  A NODE   B NODE   C NODE   D NODE    LINE #     CROSS REFERENCE LIST

I
I ELVUP    ELV-DN   ELV-UP   ELV-UP              I PLC1-PLC2 READY TO PLC1
I  301      012      011      011                I INPUT 379
I--] [------]\[------]\[------]\[------(039)--I
I                                               I
I
I
I HS-60             HS-55A                      I TRANSFER BATCH FROM
I  364      040      359      210                I ENCLOSURE AUTO LATCH
I--] [----------*---] [------]\[------(040)--I
I----------] [-^                                I NO 40,45,47,210
I                                               I
I
I
I HS-55B   HS-5     MANLCK   MANLCK              I MANIPULATOR RETRACT TO LOCK
I  360      325      309      309                I SEMI(LOAD CRUCIBLE INTO
I--] [------] [------]\[------]\[------(041)--I FURNACE)
I                                               I
I                                               I NO 9
I                                               I
I
I
I MANEXT   MANRET   ELVLD    ELVLD               I MANIPULATOR RETRACT TO LOCK
I  308      021      302      302                I INTERLOCK AUTO,SEMI
I--] [----------*---] [------] [------(042)--I (LOAD CRUCIBLE INTO FURNACE)
I----------] [-^                                I
I                                               I NO 9
I                                               I
I
I
I                                     DIS OFF I
I-                                  --(043)--I
I
I
I                                     DIS OFF I
I-                                  --(044)--I
I
I
I WRSTUP   WRSTDN   HS-60                       I WRIST ON CONDITION
I  304      305      364      040                I NO 24
I--]\[------]\[----------*---] [------(045)--I
I--------------------] [-^                      I
I
I
I HS-55C   HS-25                                I MANIPULATOR ROTATE TO
I  361      343      110      110                I AIRLOCK
I--] [------] [----------*--------*---(046)--I
I--------------------] [-^        ^             I
I----------------------------] [-^              I
I
```

```
                         COATER UNLOADER-PC#2

MODICON CONTROLLER # 508     DATE 29 AUG 78          28401C

  A NODE  B NODE  C NODE  D NODE   LINE #    CROSS REFERENCE LIST

I
I HS-21   HS-22   HS-55A                    I PZ1 PUMP AND SCALPING SCREEN
I  339     340     359     040              I NO 31,211
I--] [---------*---]\[---------*---(047)--I
I----------] [-^                 ^          I
I-------------------------] [-^             I
I
I
I                         MANLCK             I MANIPULATOR GRIP OPEN SEMI,
I  001     704     055     309               I NO 19
I--] [-----] [---------*---] [-----(048)--I
I-------------------] [-^                    I
I
I
I                                            I MANIPULATOR GRIP OPEN SEMI,
I  078     705     115     130               I AUTO(REMOVE USED CRUCIBLE)
I--] [-----] [---------*---] [-----(049)--I
I-------------------] [-^                    I NO 19
I                                            I
I
I
I HS-63                   HS-55A             I EXCHANGE CRUCIBLE AUTO LATCH
I  367     050     204     359               I NO 50,204-206
I--] [---------*---]\[-----] [-----(050)--I
I----------] [-^                             I
I
I
I HS-55B  HS-39           PLATDN             I AIRLOCK HATCH CLOSED
I  360     358     206     319               I CONDITION
I--] [-----] [---------*---] [-----(051)--I
I-------------------] [-^                    I NC 27
I
I
I HS-55B  HS-36           ALSEAL             I OPEN AIRLOCK HATCH SEMI,AUTO
I  360     355     205     028               I NO 27
I--] [-----] [---------*---]\[-----(052)--I
I-------------------] [-^                    I
I
I
I HS-55C  HS-36   HS-39   HS-39              I OPEN AIRLOCK HATCH MANUAL
I  361     355     358     358               I NO 27
I--] [-----] [-----]\[-----]\[-----(053)--I
I
I
I HS-55B  HS-37                              I AIRLOCK PLATFORM UP SEMI,
I  360     356     033     032               I AUTO
I--] [-----] [---------*---]\[-----(054)--I
I-------------------] [-^                    I NO 26
I                                            I
I
```

COATER UNLOADER-PC#2

MODICON CONTROLLER # 508 DATE 29 AUG 78 28401C

```
  A NODE   B NODE   C NODE   D NODE    LINE #     CROSS REFERENCE LIST

I
I HS-55B   HS-6     GRIPOP   GRIPOP            I MANIPULATOR GRIP OPEN,SEMI
I  360      326      306      306              I (LOAD CRUCIBLE INTO FURNACE)
I--] [------] [------]\[------]\[------(055)--I
I                                              I NO 48
I                                              I
I
I
I                   HS-55B                     I UNLOAD CRUCIBLE AND BATCH
I  057      711      360      004              I SEQUENCE CLEAR CONDITION
I--] [------] [----------*--------*---(056)--I
I--------------------] [-^        ^            I NO 67,105
I-----------------------------] [-^            I
I
I
I          HS-59    HS-55A                     I UNLOAD CRUCIBLE AND BATCH
I  057      363      359      711              I AUTO LATCH
I--] [----------*---] [------]\[------(057)--I
I----------] [-^                               I NO 3,56,57,69,73,75,79,82,
I                                              I  84,89,93,108,109
I                                              I
I
I
I HS-55B   HS-8     ELVUP    ELVUP             I ELEVATOR UP TO FURNACE SEMI
I  360      328      301      301              I (LOAD CRUCIBLE INTO FURNACE)
I--] [------] [------]\[------]\[------(058)--I
I                                              I NO 8
I                                              I
I
I
I HS-57                                        I INCREMENT SEQ STATE 700
I  362      700      700      060              I (LOAD CRUCIBLE INTO FURNACE)
I--] [------] [------] [----------*---(059)--I
I----------------------------] [-^             I NO 66
I                                              I
I
I
I MANEXT                                       I INCREMENT SEQ STATE 701
I  308      701      701      061              I (LOAD CRUCIBLE INTO FURNACE)
I--] [------] [------] [----------*---(060)--I
I----------------------------] [-^             I NO 59
I                                              I
I
I
I ELVLD                                        I INCREMENT SEQ STATE 702
I  302      702      702      062              I (LOAD CRUCIBLE INTO FURNACE)
I--] [------] [------] [----------*---(061)--I
I----------------------------] [-^             I NO 60
I                                              I
I
```

```
                         COATER UNLOADER-PC#2

MODICON CONTROLLER # 508     DATE 29 AUG 78          28401C

  A NODE  B NODE  C NODE  D NODE   LINE #    CROSS REFERENCE LIST

I
I MANLCK                                     I INCREMENT SEQ STATE 703
I  309     703     703     063               I (LOAD CRUCIBLE INTO FURNACE)
I--] [-----] [-----] [---------*---(062)--I
I---------------------------] [-^            I NO 61
I                                            I
I
I
I GRIPOP                                     I INCREMENT SEQ STATE 704
I  306     704     704     064               I (LOAD CRUCIBLE INTO FURNACE)
I--] [-----] [-----] [---------*---(063)--I
I---------------------------] [-^            I NO 62
I                                            I
I
I
I MANRET                                     I INCREMENT SEQ STATE 705
I  311     705     705     065               I (LOAD CRUCIBLE INTO FURNACE)
I--] [-----] [-----] [---------*---(064)--I
I---------------------------] [-^            I NO 63
I                                            I
I
I
I ELVUP                                      I INCREMENT SEQ STATE 706
I  301     706     706     067               I (LOAD CRUCIBLE INTO FURNACE)
I--] [-----] [-----] [---------*---(065)--I
I---------------------------] [-^            I NO 64
I                                            I
I
I
I                                            I SEQUENCER INCREMENT
I  059     001     108     121               I CONDITION ALL SUBROUTINES
I--] [-----] [---------*-------*---(066)--I
I------------------] [-^       ^             I NO 201
I---------------------------] [-^            I
I
I
I                  HS-55B                    I LOAD CRUCIBLE INTO FURNACE
I  001     707     360     056               I SEQUENCE CLEAR CONDITION
I--] [-----] [---------*-------*---(067)--I
I------------------] [-^       ^             I NO 65
I---------------------------] [-^            I NC 201
I
I
I                                            I ELEVATOR UP TO LOAD NOT
I  006     008     069     069               I MANUAL
I--] [---------*-------*-------*---(068)--I
I----------] [-^       ^       ^             I NO 11
I------------------] [-^       ^             I
I---------------------------] [-^            I
I
```

COATER UNLOADER-PC#2

MODICON CONTROLLER # 508 DATE 29 AUG 78 28401C

```
  A NODE   B NODE   C NODE   D NODE    LINE #     CROSS REFERENCE LIST

I
I
I  057      702      071      070                I ELEVATOR UP TO LOAD SEMI,
I--] [------] [----------*---] [------(069)--I AUTO (UNLOAD CRUCIBLE AND
I-------------------] [-^                       I BATCH)
I                                                I
I                                                I NO 68
I                                                I
I
I
I ELVUP    MANRET   MANRET   MANRET             I ELEVATOR UP TO LOAD
I  301      311      311      311                I INTERLOCK (UNLOAD CRUCIBLE
I--]\[------] [------] [------] [------(070)--I AND BATCH)
I                                                I
I                                                I NO 69
I                                                I
I
I
I HS-55B   HS-12    ELVLD    ELVLD               I ELEVATOR UP TO LOAD,SEMI
I  360      330      302      302                I (UNLOAD CRUCIBLE AND BATCH)
I--] [------] [------]\[------]\[------(071)--I
I                                                I NO 69
I                                                I
I
I
I ROT-EL   MANRET   GRIPOP   WRSTUP              I ELEVATOR DOWN INTERLOCK
I  313      311      306      304                I (UNLOAD CRUCIBLE AND BATCH
I--] [------] [------] [------] [------(072)--I (REMOVE CHAMBER FROM
I                                                I FURNACE))
I                                                I
I                                                I NO 73
I                                                I
I
I
I                                                I ELEVATOR DOWN SEMI,AUTO
I  057      701      074      072                I (UNLOAD CRUCIBLE AND BATCH
I--] [------] [----------*---] [------(073)--I (REMOVE CHAMBER FROM
I-------------------] [-^                       I FURNACE))
I                                                I
I                                                I NO 12
I                                                I
I
I
I HS-55B   HS-11    ELVDN    ELVDN               I ELEVATOR DOWN SEMI
I  360      329      303      303                I (UNLOAD CRUCIBLE AND BATCH
I--] [------] [------]\[------]\[------(074)--I (REMOVE CHAMBER FROM
I                                                I FURNACE))
I                                                I
I                                                I NO 73
I                                                I
I
```

COATER UNLOADER-PC#2

MODICON CONTROLLER # 508 DATE 29 AUG 78 28401C

```
  A NODE   B NODE   C NODE   D NODE    LINE #     CROSS REFERENCE LIST

I                                                I ELEVATOR DOWN,SEMI
I                                                I (UNLOAD CRUCIBLE AND BATCH
I  057      708      092      202                I (REMOVE CHAMBER FROM
I--] [-----] [---------*---] [-----(075)--I (REMOVE CHAMBER FROM
I-------------------] [-^                        I DISTRIBUTOR))
I                                                I
I                                                I NO 12
I                                                I
I
I
I ROT-EL   WRSTUP   GRIPOP   ELVLD               I MANIPULATOR EXTEND TO LOAD
I  313      304      306      302                I INTERLOCK
I--] [-----] [-----] [-----] [-----(076)--I (UNLOAD CRUCIBLE AND BATCH)
I                                                I
I                                                I NO 3
I                                                I
I
I
I                                                I MANIPULATOR EXTEND SEMI,AUTO
I  142      003      079      087                I NO 20
I--] [---------*-------*-------*---(077)--I
I----------] [-^        ^        ^               I
I-------------------] [-^        ^               I
I---------------------------] [-^                I
I
I
I          HS-61    HS-55A                       I REMOVE CRUCIBLE AUTO LATCH
I  078      365      359      707                I NO 4,49,78,87,110,112,117,
I--] [---------*---] [-----]\[-----(078)--I  121,129
I----------] [-^                                 I
I
I
I                            GRIPCL              I MANIPULATOR EXTEND TO LOAD
I  057      706      088      307                I SEMI,AUTO
I--] [-----] [---------*---] [-----(079)--I (UNLOAD CRUCIBLE AND BATCH)
I-----------------] [-^                          I
I                                                I NO 77
I                                                I
I
I
I HS-55B   HS-13    MANEXT   MANEXT              I MANIPULATOR EXTEND TO LOAD,
I  360      331      308      308                I SEMI
I--] [-----] [-----]\[-----]\[-----(080)--I (UNLOAD CRUCIBLE AND BATCH)
I                                                I
I                                                I NO 3
I                                                I
I
```

```
                              COATER UNLOADER-PC#2

MODICON CONTROLLER # 508      DATE 29 AUG 78            28401C

  A NODE  B NODE  C NODE  D NODE   LINE #    CROSS REFERENCE LIST


I
I                                                I MANIPULATOR RETRACT
I  009     010     082     093                   I NO 21
I--] [----------*--------*--------*---(081)--I
I-----------] [-^        ^        ^             I
I--------------------] [-^        ^             I
I-----------------------------] [-^             I
I
I
I                            ELVLD               I MANIPULATOR RETRACT TO LOCK
I  057     704     083     302                   I SEMI,AUTO
I--] [------] [----------*---] [------(082)--I (UNLOAD CRUCIBLE AND BATCH)
I--------------------] [-^                       I
I                                                I NO 81
I                                                I
I
I
I HS-55B  HS-14   MANRET  MANLCK                 I MANIPULATOR RETRACT TO LOCK,
I  360     332     311     309                   I SEMI
I--] [------] [------]\[------]\[------(083)--I (UNLOAD CRUCIBLE AND BATCH)
I                                                I
I                                                I NO 82
I                                                I
I
I
I                            MANLCK              I GRIP CLOSE,SEMI,AUTO
I  057     705     086     309                   I (UNLOAD CRUCIBLE AND BATCH)
I--] [------] [----------*---] [------(084)--I
I-------------------] [-^                        I NO 18
I                                                I
I
I
I                            MAN-AL              I GRIP CLOSE,SEMI,AUTO
I  106     703     138     310                   I NO 18
I--] [------] [----------*---] [------(085)--I
I-------------------] [-^                        I
I
I
I HS-55B  HS-15   GRIPCL  GRIPCL                 I GRIP CLOSE,SEMI
I  360     333     307     307                   I (UNLOAD CRUCIBLE AND BATCH)
I--] [------] [------]\[------]\[------(086)--I
I                                                I NO 84
I                                                I
I
I
I                            MAN-UP              I MANIPULATOR EXTEND TO
I  078     703     114     023                   I AIRLOCK,SEMI,AUTO
I--] [------] [----------*---] [------(087)--I (REMOVE USED CRUCIBLE)
I-------------------] [-^                        I
I                                                I NO 77
I                                                I
I
```

COATER UNLOADER-PC#2

MODICON CONTROLLER # 508 DATE 29 AUG 78 28401C

```
  A NODE   B NODE   C NODE   D NODE    LINE #     CROSS REFERENCE LIST

I
I HS-55B   HS-16    MANEXT   MANEXT            I MANIPULATOR EXTEND TO LOAD,
I  360      334      308      308              I SEMI
I--] [------] [------]\[------]\[-----(088)--I (UNLOAD CRUCIBLE AND BATCH)
I                                              I
I                                              I NO 79
I                                              I
I
I
I                                              I MANIPULATOR UP,SEMI,AUTO
I  057      707      091      090              I (UNLOAD CRUCIBLE AND BATCH)
I--] [-----] [---------*---] [-----(089)--I
I-------------------] [-^                      I NO 23
I                                              I
I
I
I MANEXT            MANRET                     I MANIPULATOR UP INTERLOCK
I  308      090      021      109              I (UNLOAD CRUCIBLE AND BATCH)
I--] [---------*---]\[-----]\[-----(090)--I
I-----------] [-^                              I NO 89,90
I                                              I
I
I
I HS-55B   HS-17    MAN-UP   MAN-UP            I MANIPULATOR UP,SEMI
I  360      335      023      023              I (UNLOAD CRUCIBLE AND BATCH)
I--] [-----] [---------*-------*---(091)--I
I-------------------] [-^        ^             I NO 89
I--------------------------] [-^               I
I
I
I HS-55B   HS-18    ELVDN    ELVDN             I ELEVATOR DOWN,SEMI
I  360      336      303      303              I (UNLOAD CRUCIBLE AND BATCH
I--] [-----] [-----]\[-----]\[-----(092)--I (REMOVE CHAMBER FROM
I                                              I DISTRIBUTOR))
I                                              I
I                                              I NO 75
I                                              I
I
I
I                            ELVDN             I MANIPULATOR RETRACT TO DUMP
I  057      710      094      303              I (UNLOAD CRUCIBLE AND BATCH)
I--] [-----] [---------*---] [-----(093)--I
I-------------------] [-^                      I NO 81
I                                              I
I
```

```
                                COATER UNLOADER-PC#2

MODICON CONTROLLER # 508      DATE 29 AUG 78            284010

  A NODE   B NODE   C NODE   D NODE    LINE #     CROSS REFERENCE LIST

I
I HS-55B   HS-20    MANRET   MANRET             I MANIPULATOR RETRACT TO DUMP.
I  340      338      311      311               I SEMI
I--] [------] [------]\[------]\[------(094)--I (UNLOAD CRUCIBLE AND BATCH)
I                                               I
I                                               I NO 93
I                                               I
I
I
I HS-59                                         I INCREMENT SEQ STATE 700
I  363      700      700      096               I (UNLOAD CRUCIBLE AND BATCH)
I--] [------] [------] [----------*---(095)--I
I-----------------------------] [-^             I NO 108
I                                               I
I
I
I ELVDN                                         I INCREMENT SEQ STATE 701
I  303      701      701      097               I (UNLOAD CRUCIBLE AND BATCH)
I--] [------] [------] [----------*---(096)--I
I-----------------------------] [-^             I NO 95,108
I                                               I
I
I
I ELVLD                                         I INCREMENT SEQ STATE 702
I  302      702      702      098               I (UNLOAD CRUCIBLE AND BATCH)
I--] [------] [------] [----------*---(097)--I
I-----------------------------] [-^             I NO 96
I                                               I
I
I
I MANEXT                                        I INCREMENT SEQ STATE 703
I  308      703      703      099               I (UNLOAD CRUCIBLE AND BATCH)
I--] [------] [------] [----------*---(098)--I
I-----------------------------] [-^             I NO 97
I                                               I
I
I
I MANLCK                                        I INCREMENT SEQ STATE 704
I  309      704      704      100               I (UNLOAD CRUCIBLE AND BATCH)
I--] [------] [------] [----------*---(099)--I
I-----------------------------] [-^             I NO 98
I                                               I
I
I
I GRIPCL                                        I INCREMENT SEQ STATE 705
I  307      705      705      101               I (UNLOAD CRUCIBLE AND BATCH)
I--] [------] [------] [----------*---(100)--I
I-----------------------------] [-^             I NO 99
I                                               I
I
```

```
                              COATER UNLOADER-PC#2

MODICON CONTROLLER # 508      DATE 29 AUG 78            28401C

  A NODE   B NODE   C NODE   D NODE    LINE #     CROSS REFERENCE LIST

I
I MANEXT                                          I INCREMENT SEQ STATE 706
I  308      706      706      102                 I (UNLOAD CRUCIBLE AND BATCH)
I--] [------] [------] [----------*---(101)--I
I-----------------------------] [-^               I NO 100
I                                                 I
I
I
I                                                 I INCREMENT SEQ STATE 707
I  202      707      707      103                 I (UNLOAD CRUCIBLE AND BATCH)
I--] [------] [------] [----------*---(102)--I
I-----------------------------] [-^               I NO 101
I                                                 I
I
I
I ELVDN                                           I INCREMENT SEQ STATE 708
I  303      708      708      104                 I (UNLOAD CRUCIBLE AND BATCH)
I--] [------] [------] [----------*---(103)--I
I-----------------------------] [-^               I NO 102
I                                                 I
I
I
I MAN DN                                          I INCREMENT SEQ STATE 709
I  315      709      709      105                 I (UNLOAD CRUCIBLE AND BATCH)
I--] [------] [------] [----------*---(104)--I
I-----------------------------] [-^               I NO 103
I                                                 I
I
I
I MANRET                                          I INCREMENT SEQ STATE 710
I  311      710      710      056                 I (UNLOAD CRUCIBLE AND BATCH)
I--] [------] [------] [----------*---(105)--I
I-----------------------------] [-^               I NO 104
I                                                 I
I
I
I          HS-62    HS-55A                        I PICKUP NEW CRUCIBLE
I  106      366      359      706                 I AUTO LATCH
I--] [----------*---] [------]\[------(106)--I
I-----------] [-^                                 I NO 2,85,106,120,132,135,140,
I                                                 I  144
I                                                 I
I
I
I HS-55B  HS-7     MANRET   MANRET                I MANIPULATOR RETRACT TO DUMP,
I  360      327      311      311                 I SEMI
I--] [------] [------]\[------]\[------(107)--I (LOAD CRUCIBLE INTO FURNACE)
I                                                 I
I                                                 I NO 10
I                                                 I
I
```

COATER UNLOADER-PC#2

MODICON CONTROLLER # 508 DATE 29 AUG 78 28401C

```
  A NODE   B NODE   C NODE   D NODE    LINE #     CROSS REFERENCE LIST

I
I                                                I INCREMENT SEQUENCER
I  095      096      057      057               I (UNLOAD CRUCIBLE AND BATCH)
I--] [----------*----] [------] [------(108)--I
I-----------] [-^                                I NO 66
I                                                I
I
I
I                   MANEXT   HS-19               I MANIPULATOR DOWN CONDITION
I  057      709      020      337               I (FOR ROTATE TO ELEVATOR)
I--] [------] [----------*--------*---(109)--I
I--------------------] [-^        ^              I NC 90
I-----------------------------] [-^              I
I
I
I                            MANRET              I MANIPULATOR ROTATE TO
I  078      701      111      311               I AIRLOCK,SEMI.AUTO
I--] [------] [----------*----] [------(110)--I
I--------------------] [-^                       I NO 46
I                                                I
I
I
I HS-55B  HS-25   ROT-AL   ROT-AL               I MANIPULATOR ROTATE TO
I  360      343      312      312               I AIRLOCK,SEMI
I--] [------] [------]\[------]\[------(111)--I
I                                                I NO 110
I                                                I
I
I
I                                                I MANIPULATOR UP,SEMI,AUTO
I  078      702      113      129               I (REMOVE USED CRUCIBLE)
I--] [------] [----------*----]\[------(112)--I
I--------------------] [-^                       I NO 23
I                                                I
I
I
I HS-55B  HS-26   MAN-UP   MAN-UP               I MANIPULATOR UP,SEMI
I  360      344      023      023               I (REMOVE USED CRUCIBLE)
I--] [------] [----------*--------*---(113)--I
I--------------------] [-^        ^              I NO 112
I-----------------------------] [-^              I
I
I
I HS-55B  HS-27   MAN-AL   MAN-AL               I MANIPULATOR EXTEND TO
I  360      345      310      310               I AIRLOCK,SEMI
I--] [------] [------]\[------]\[------(114)--I (REMOVE USED CRUCIBLE)
I                                                I
I                                                I NO 87
I                                                I
I
```

```
                              COATER UNLOADER-PC#2

MODICON CONTROLLER # 508      DATE 29 AUG 78            28401C

  A NODE   B NODE   C NODE   D NODE    LINE #     CROSS REFERENCE LIST

I
I HS-55B   HS-29    GRIPOP   GRIPOP            I MANIPULATOR GRIP OPEN,SEMI
I  340      347      306      306              I (REMOVE USED CRUCIBLE)
I--] [------] [------]\[------]\[-----(115)--I
I                                              I NO 49
I                                              I
I
I
I                                              I MANIPULATOR RETRACT
I  117      120      120      120              I NO 21
I--] [---------*--------*--------*---(116)--I
I----------] [-^        ^        ^             I
I------------------] [-^        ^              I
I----------------------------] [-^             I
I
I
I                            GRIPOP            I MANIPULATOR RETRACT TO DUMP
I  078      706      118      306              I (REMOVE USED CRUCIBLE)
I--] [-----] [----------*---] [-----(117)--I
I------------------] [-^                       I NO 116
I                                              I
I
I
I HS-55B   HS-30    MANRET   MANRET            I MANIPULATOR RETRACT TO DUMP,
I  340      348      311      311              I SEMI
I--] [-----] [-----]\[------]\[-----(118)--I (REMOVE USED CRUCIBLE)
I                                              I
I                                              I NO 117
I                                              I
I
I
I ROT-EL                                       I INCREMENT SEQ STATE 705
I  313      705      705      002              I (PICKUP NEW CRUCIBLE)
I--] [-----] [-----] [---------*---(119)--I
I--------------------------] [-^               I NO 148
I                                              I
I
I
I                            GRIPCL            I MANIPULATOR RETRACT
I  106      704      139      307              I (PICKUP NEW CRUCIBLE)
I--] [-----] [---------*---] [-----(120)--I
I------------------] [-^                       I NO 116
I                                              I
I
I
I                                              I INCREMENT SEQUENCER
I  143      122      078      144              I (REMOVE USED CRUCIBLE)OR
I--] [---------*---] [---------*---(121)--I (PICKUP NEW CRUCIBLE)
I----------] [-^                ^              I
I--------------------------] [-^               I NO 66
I                                              I
I
```

COATER UNLOADER-PC#2

MODICON CONTROLLER # 508 DATE 29 AUG 78 28401C

```
  A NODE   B NODE   C NODE   D NODE    LINE #     CROSS REFERENCE LIST

I
I ROT-AL                                          I INCREMENT SEQ STATE 701
I  312      701      701      123                I (REMOVE USED CRUCIBLE)
I--] [------] [------] [----------*---(122)--I
I----------------------------] [-^                I NO 121,143
I                                                 I
I
I
I                                                 I INCREMENT SEQ STATE 702
I  202      702      702      124                I (REMOVE USED CRUCIBLE)
I--] [------] [------] [----------*---(123)--I
I----------------------------] [-^                I NO 122
I                                                 I
I
I
I MAN-AL                                          I INCREMENT SEQ STATE 703
I  310      703      703      125                I (REMOVE USED CRUCIBLE)
I--] [------] [------] [----------*---(124)--I
I----------------------------] [-^                I NO 123
I                                                 I
I
I
I MAN DN                                          I INCREMENT SEQ STATE 704
I  315      704      704      126                I (REMOVE USED CRUCIBLE)
I--] [------] [------] [----------*---(125)--I
I----------------------------] [-^                I NO 124
I                                                 I
I
I
I GRIPOP                                          I INCREMENT SEQ STATE 705
I  306      705      705      127                I (REMOVE USED CRUCIBLE)
I--] [------] [------] [----------*---(126)--I
I----------------------------] [-^                I NO 125
I                                                 I
I
I
I MANRET                                          I INCREMENT SEQ STATE 706
I  311      706      706      004                I (REMOVE USED CRUCIBLE)
I--] [------] [------] [----------*---(127)--I
I----------------------------] [-^                I NO 126
I                                                 I
I
I
I HS-55B   HS-3     MANEXT   MANEXT               I MANIPULATOR EXTEND TO LOAD,
I  360      323      308      308                I SEMI
I--] [------] [------]\[------]\[------(128)--I (LOAD CRUCIBLE INTO FURNACE)
I                                                 I
I                                                 I NO 142
I                                                 I
I
```

COATER UNLOADER-PC#2

MODICON CONTROLLER # 508 DATE 29 AUG 78 28401C

```
  A NODE   B NODE   C NODE   D NODE    LINE #     CROSS REFERENCE LIST

I
I                    HS-28    ROT-AL            I MANIPULATOR DOWN CONDITION
I  078      704      346      312               I (FOR ROTATE TO ELEVATOR)
I--] [------] [----------*---------*----(129)--I
I---------------------] [-^        ^            I NC 112
I-----------------------------]\[-^             I
I
I
I MAN DN   MAN-AL   ROT-AL   ROT-AL             I MANIPULATOR GRIP INTERLOCK,
I  315      310      312      312               I SEMI,AUTO
I--] [------] [------] [------] [------(130)--I (REMOVE USED CRUCIBLE)
I                                               I
I                                               I NO 49
I                                               I
I
I
I                                   DIS OFF I
I-                                 --(131)--I
I
I
I                                               I AIRLOCK SEAL,SEMI,AUTO
I  106      701      134      133               I NO 28
I--] [------] [----------*----] [------(132)--I
I--------------------] [-^                      I
I
I
I PLATDN   HTCHCL   MANRET   MANRET             I AIRLOCK SEAL INTERLOCK,
I  319      321      311      311               I SEMI,AUTO
I--] [------] [------] [------] [------(133)--I
I                                               I NO 132
I                                               I
I
I
I AL-CW             HS-55B   HS-31               I AIRLOCK SEAL,SEMI
I  316      203      360      349               I NO 132
I--]\[----------*----] [------] [------(134)--I
I-----------]\[-^                               I
I
I
I                                               I MANIPULATOR EXTEND
I  106      702      137      136               I (PICKUP NEW CRUCIBLE)
I--] [------] [----------*----] [------(135)--I
I--------------------] [-^                      I NO 20
I                                               I
I
```

```
                              COATER UNLOADER-PC#2

MODICON CONTROLLER # 508      DATE 29 AUG 78            28401C

  A NODE  B NODE  C NODE  D NODE   LINE #    CROSS REFERENCE LIST


I
I AL-CW   MAN ON  ROT-AL  PLATON            I MANIPULATOR EXTEND TO PICKUP
I  316     315     312     319              I NEW CRUCIBLE INTERLOCK
I--] [------] [------] [------] [------(136)--I
I                                            I NO 135
I                                            I
I
I
I HS-55B  HS-32   MAN-AL  MAN-AL             I MANIPULATOR EXTEND,SEMI
I  340     350     310     310               I (PICKUP NEW CRUCIBLE)
I--] [------] [------]\[------]\[------(137)--I
I                                            I NO 135
I                                            I
I
I
I HS-55B  HS-33   GRIPCL  GRIPCL             I GRIP CLOSE,SEMI
I  340     351     307     307               I (PICKUP NEW CRUCIBLE)
I--] [------] [------]\[------]\[------(138)--I
I                                            I NO 85
I                                            I
I
I
I HS-55B  HS-34   MANRET  MANRET             I MANIPULATOR RETRACT TO DUMP,
I  340     352     311     311               I SEMI
I--] [------] [------]\[------]\[------(139)--I (PICKUP NEW CRUCIBLE)
I                                            I
I                                            I NO 120
I                                            I
I
I
I                         MANRET             I MANIPULATOR ROTATE TO
I  106     705     141     311               I ELEVATOR,SEMI,AUTO
I--] [------] [---------*---] [------(140)--I
I-------------------] [-^                    I NO 22
I                                            I
I
I
I HS-55B  HS-35   ROT-EL  ROT-EL             I MANIPULATOR ROTATE TO
I  340     353     313     313               I ELEVATOR,SEMI
I--] [------] [------]\[------]\[------(141)--I
I                                            I NO 140
I                                            I
I
I
I                                            I MANIPULATOR EXTEND TO LOAD,
I  001     701     128     005               I SEMI,AUTO
I--] [------] [---------*---] [------(142)--I (LOAD CRUCIBLE INTO FURNACE)
I-------------------] [-^                    I
I                                            I NO 77
I                                            I
I
```

COATER UNLOADER-PC#2

MOTION CONTROLLER # 508 DATE 29 AUG 78 28401C

```
  A NODE   B NODE   C NODE   D NODE    LINE #     CROSS REFERENCE LIST

I
I HS-A1                                          I INCREMENT SEQ STATE 700
I  365      700      700      122                I (REMOVE USED CRUCIBLE)
I--] [------] [------] [----------*---(143)--I
I-----------------------------] [-^              I NO 121
I                                                I
I
I
I HS-A2                                          I INCREMENT SEQ STATE 700
I  366      700      145      106                I (PICKUP NEW CRUCIBLE)
I--] [------] [----------*---] [------(144)--I
I-------------------] [-^                        I NO 121
I                                                I
I
I
I                                                I INCREMENT SEQ STATE 701
I  208      701      701      146                I (PICKUP NEW CRUCIBLE)
I--] [------] [------] [----------*---(145)--I
I-----------------------------] [-^              I NO 144
I                                                I
I
I
I MAN-AL                                         I INCREMENT SEQ STATE 702
I  [illegible]      702      702      [illegible]          I (PICKUP NEW CRUCIBLE)
I--] [------] [------] [----------(146)--I
I-----------------------------] [-^              I NO 145
I                                                I
I
I
I [illegible]                                    I INCREMENT SEQ STATE [illegible]
I  [illegible]      703      703      [illegible]          I (PICKUP NEW CRUCIBLE)
I--] [------] [------] [----------*---(147)--I
I-----------------------------] [-^              I NO [illegible]
I                                                I
I
I
I MANRET                                         I INCREMENT SEQ STATE [illegible]
I  [illegible]      704      704      [illegible]          I (PICKUP NEW CRUCIBLE)
I--] [------] [------] [----------*---(148)--I
I-----------------------------] [-^              I NO [illegible]
I                                                I
I
```

```
                                COATER UNLOADER-PC#2

MODICON CONTROLLER # 506      DATE 29 AUG 78            284010

  A NODE   B NODE   C NODE   D NODE    LINE #     CROSS REFERENCE LIST


I
I                                                 I SEQUENCES COUNTER
I  066      067   I-CONST-I--------I             I
I--] [----------I         I         I--(201)--I
I----------]\[--I-0020--I--------I COUNTER I
I
I
I MAN-UP   MAN-UP                                 I MANIP UP TIME DELAY
I  023      023   I-CONST-I--------I             I NO 75,102,123
I--] [----------I         I         I--(202)--I
I----------] [--I-010.0-I--------I  TIMER   I
I
I
I HS-31    HS-31                                  I ROTATE AIRLOCK LS TIMER SEMI
I  349      349   I-CONST-I--------I             I NO 134
I--] [----------I         I         I--(203)--I
I----------] [--I-010.0-I--------I  TIMER   I
I
I
I                                                 I UNLATCH TIMER
I  050      050   I-CONST-I--------I             I NO 50
I--] [----------I         I         I--(204)--I
I----------] [--I-005.0-I--------I  TIMER   I
I
I
I          PLATUP                                 I AUTO COUNTER NO  1
I  050      318   I-CONST-I--------I             I NO 33,52
I--] [----------I         I         I--(205)--I
I----------]\[--I-0001--I--------I COUNTER I
I
I
I          HTCHCL                                 I AUTO COUNTER NO  2
I  050      321   I-CONST-I--------I             I NO 32,51
I--] [----------I         I         I--(206)--I
I----------]\[--I-0001--I--------I COUNTER I
I
I
I AL-ROT   AL-ROT                                 I ROTATE AIRLOCK LS TIMER AUTO
I  025      025   I-CONST-I--------I             I NO 208
I--] [----------I         I         I--(207)--I
I----------] [--I-010.0-I--------I  TIMER   I
I
I
I AL-CW                                           I ROTATE AIRLOCK LS COUNTER
I  316      207   I-CONST-I--------I             I NO 145
I--] [----------I         I         I--(208)--I
I----------] [--I-0001--I--------I COUNTER I
I
```

COATER UNLOADER-PC#2

MODICON CONTROLLER # 508 DATE 29 AUG 78 28401C

```
  A NODE  B NODE  C NODE  D NODE   LINE #    CROSS REFERENCE LIST

I
I ALSEAL  ALSEAL                                I AIRLOCK SEAL TIMER
I  028     028  I-CONST-I-------I              I NO 25
I--] [----------I        I        I--(209)--I
I----------] [--I-005 0-I-------I  TIMER  I
I
I
I WRSTUP                                        I UNLATCH COUNTER
I  304     040  I-CONST-I-------I              I NC 40
I--] [----------I        I        I--(210)--I
I----------] [--I-0001--I-------I COUNTER I
I
I
I                                               I WRIST SPEED TIMER
I  047     047  I-CONST-I-------I              I NO 17
I--] [----------I        I        I--(211)--I
I----------] [--I-016.0-I-------I  TIMER  I
I
I
I                                 DIS OFF I
I-                               --(212)--I
I
I
I                                 DIS OFF I
I-                               --(213)--I
I
I
I                                 DIS OFF I
I-                               --(214)--I
I
I
I                                 DIS OFF I
I-                               --(215)--I
I
I
I                                 DIS OFF I
I-                               --(216)--I
I
I
I                                 DIS OFF I
I-                               --(217)--I
I
I
I                                 DIS OFF I
I-                               --(218)--I
I
```

COATER UNLOADER-PC#2

MODICON CONTROLLER # 508 DATE 29 AUG 78 28401C

A NODE	B NODE	C NODE	D NODE	LINE #	CROSS REFERENCE LIST
I					
I				DIS OFF I	
I-				--(219)--I	
I					
I					
I				DIS OFF I	
I-				--(220)--I	
I					
I					
I				DIS OFF I	
I-				--(221)--I	
I					

COATER UNLOADER-PC#2

MODICON CONTROLLER # 508 DATE 29 AUG 78 284010

INPUT CROSS REFERENCE LIST

301 ELVUP ELEVATOR TO FURNACE LIMIT SWITCH
NO 39,65
NC 58,70

302 ELVLD ELEVATOR UP TO LOAD LIMIT SWITCH
NO 42,61,76,82,97
NC 7,71

303 ELVDN ELEVATOR DOWN FULL LIMIT SWITCH
NO 5,93,96,103
NC 74,92

304 WRSTUP MANIPULATOR WRIST UP LIMIT SWITCH
NO 5,72,76,210
NC 14,15,45

305 WRSTDN MANIPULATOR WRIST DOWN LIMIT SWITCH
NO 14
NC 45

306 GRIPOP MANIPULATOR GRIP OPEN LIMIT SWITCH
NO 10,63,72,76,117,126
NC 55,115

307 GRIPCL MANIPULATOR GRIP CLOSE LIMIT SWITCH
NO 5,79,100,120,147
NC 86,138

308 MANEXT MANIPULATOR EXTEND TO LOAD LIMIT SWITCH
NO 6,42,60,90,98,101
NC 80,88,128

309 MANLCK MANIPULATOR LOCK LIMIT SWITCH
NO 48,62,84,99
NC 41,83

310 MAN-AL MANIPULATOR EXTEND TO AIRLOCK LIMIT SWITCH
NO 85,124,130,146
NC 114,137

311 MANRET MANIPULATOR RETRACT TO DUMP LIMIT SWITCH
NO 8,24,64,70,72,105,110,127,133,140,148
NC 83,94,107,118,139

312 ROT-AL MANIPULATOR ROTATE TO AIRLOCK LIMIT SWITCH
NO 122,130,136
NC 111,129

313 ROT-EL MANIPULATOR ROTATE TO ELEVATOR LIMIT SWITCH
NO 5,24,72,76,119
NC 141

COATER UNLOADER-PC#2

MODICON CONTROLLER # 508 DATE 29 AUG 78 28401C

INPUT CROSS REFERENCE LIST

315 MAN DN MANIPULATOR DOWN LIMIT SWITCH
NO 104,125,130,136

316 AL-CW AIRLOCK ROTATE CW LIMIT SWITCH
NO 136,208
NC 134

318 PLATUP AIRLOCK PLATFORM UP LIMIT SWITCH
NC 205

319 PLATDN AIRLOCK PLATFORM DOWN LIMIT SWITCH
NO 51,133,136

320 HTCHOP HATCH OPEN LIMIT SWITCH
NC 32

321 HTCHCL HATCH CLOSE LIMIT SWITCH
NO 133
NC 206

323 HS-3 MANIP EXTEND HAND SWITCH
NO 20,128

324 HS-4 ELEV UP TO LOAD HAND SWITCH
(LOAD CRUCIBLE INTO FURNACE)
NO 7,11

325 HS-5 MANIPULATOR RETRACT TO LOCK HANDSWITCH
(LOAD CRUCIBLE INTO FURNACE)
NO 21,41

326 HS-6 GRIP OPEN HAND SWITCH
(LOAD CRUCIBLE INTO FURNACE)
NO 19,55

327 HS-7 MANIPULATOR RETRACT TO DUMP HANDSWITCH
(LOAD CRUCIBLE INTO FURNACE)
NO 107

328 HS-8 ELEVATOR UP TO FURNACE HAND SWITCH
(LOAD CRUCIBLE INTO FURNACE)
NO 58

COATER UNLOADER-PC#2

MODICON CONTROLLER # 508 DATE 29 AUG 78 28401C

INPUT CROSS REFERENCE LIST

329 HS-11 ELEVATOR DOWN FULL HAND SWITCH
(REMOVE CHAMBER FROM FURNACE)
(UNLOAD CRUCIBLE AND BATCH)
NO 12,74

330 HS-12 ELEVATOR UP TO LOAD HAND SWITCH
(UNLOAD CRUCIBLE AND BATCH)
NO 71

331 HS-13 MANIPULATOR EXTEND TO LOAD HAND SWITCH
(UNLOAD CRUCIBLE AND BATCH)
NO 80

332 HS-14 MANIPULATOR RETRACT TO LOCK HAND SWITCH
(UNLOAD CRUCIBLE AND BATCH)
NO 83

333 HS-15 GRIP CLOSE HANDSWITCH
(UNLOAD CRUCIBLE AND BATCH)
NO 18,86

334 HS-16 MANIPULATOR EXTEND TO LOAD HANDSWITCH
(UNLOAD CRUCIBLE AND BATCH)
NO 88

335 HS-17 MANIPULATOR UP HAND SWITCH
(UNLOAD CRUCIBLE AND BATCH)
NO 23,91

336 HS-18 ELEVATOR DOWN HAND SWITCH
(UNLOAD CRUCIBLE AND BATCH(REMOVE CHAMBER FROM
FURNACE))
NO 92

337 HS-19 MANIPULATOR DOWN HAND SWITCH
(FOR ROTATION TO ELEVATOR)
NO 109

338 HS-20 MANIPULATOR RETRACT TO DUMP HAND SWITCH
(UNLOAD CRUCIBLE AND BATCH)
NO 94

COATER UNLOADER-PC#2

MODICON CONTROLLER # 508 DATE 29 AUG 78 28401C

INPUT CROSS REFERENCE LIST

339 HS-21 PUMP PZ1 HAND SWITCH
NO 47

340 HS-22 SCALPING SCREEN HAND SWITCH
NO 47

341 HS-23 WRIST ROTATE CW HAND SWITCH
NO 15

342 HS-24 WRIST ROTATE CCW HAND SWITCH
NO 15

343 HS-25 MANIPULATOR ROTATE TO AIRLOCK HAND SWITCH
NO 46,111

344 HS-26 MANIPULATOR UP HAND SWITCH (REMOVE USED CRUCIBLE)
NO 113

345 HS-27 MANIPULATOR EXTEND TO AIRLOCK HAND SWITCH
(REMOVE USED CRUCIBLE)
NO 114

346 HS-28 MANIPULATOR DOWN HAND SWITCH(FOR ROTATE TO AIRLOCK)
NO 129

347 HS-29 GRIP OPEN HAND SWITCH (REMOVE USED CRUCIBLE)
NO 115

348 HS-30 MANIPULATOR RETRACT TO DUMP HAND SWITCH
(REMOVE USED CRUCIBLE)
NO 118

349 HS-31 ROTATE AIRLOCK HAND SWITCH
NO 28,134,203

350 HS-32 MANIPULATOR EXTEND HAND SWITCH (PICKUP NEW CRUCIBLE)
NO 137

CASTER UNLOADER-PC#2

MODICON CONTROLLER # 508 DATE 19 AUG 79 224017

INPUT CROSS REFERENCE LIST

351 HS-33 MANIPULATOR GRIP CLOSE HAND SWITCH
(PICKUP NEW CRUCIBLE)
NO 138

352 HS-34 MANIPULATOR RETRACT TO DUMP HAND SWITCH
(PICKUP NEW CRUCIBLE)
NO 139

353 HS-35 MANIPULATOR ROTATE TO ELEVATOR HANDSWITCH
NO 22, 141

355 HS-36 AIRLOCK HATCH OPEN HAND SWITCH
NO 52, 53

356 HS-37 AIRLOCK PLATFORM UP HAND SWITCH
NO 26, 54

357 HS-38 AIRLOCK PLATFORM DOWN HAND SWITCH
NO 32
NC 26

358 HS-39 AIRLOCK HATCH CLOSE HAND SWITCH
NO 51
NC 53

359 HS-55A AUTO MODE HAND SWITCH
NO 1, 40, 50, 57, 78, 106
NC 47

360 HS-55B SEMIAUTO MODE HAND SWITCH
NO 2, 4, 7, 32, 41, 51, 52, 54-56, 58, 67, 71, 74, 80, 83, 86, 88, 91, 92, 94, 107,
111, 113-115, 118, 128, 134, 137-139, 141

361 HS-55C MANUAL MODE HAND SWITCH
NO 11, 12, 18-23, 26, 28, 46, 53
NC 24

362 HS-57 LOAD CRUCIBLE AND BATCH AUTO PUSH BUTTON
NO 1, 59

363 HS-59 UNLOAD CRUCIBLE AND BATCH AUTO PUSHBUTTON
NO 57, 95

COATER UNLOADER-PC#2

MODICON CONTROLLER # 508 DATE 29 AUG 78 28401C

INPUT CROSS REFERENCE LIST

364 HS-60 TRANSFER BATCH AUTO PUSHBUTTON
NO 40, 45

365 HS-61 REMOVE CRUCIBLE AUTO PUSHBUTTON
NO 78, 143

366 HS-62 PICKUP NEW CRUCIBLE AUTO PUSHBUTTON
NO 106, 144

367 HS-63 EXCHANGE CRUCIBLE AUTO LATCH
NO 50

371 PLC 1 READY
NC 14

700 SEQUENCER STATE
NO 59, 95, 143, 144

701 SEQUENCER STATE
NO 60, 73, 96, 110, 122, 132, 142, 145

702 SEQUENCER STATE
NO 6, 61, 69, 97, 112, 123, 135, 146

703 SEQUENCER STATE
NO 3, 9, 62, 85, 87, 98, 124, 147

704 SEQUENCER STATE
NO 48, 63, 82, 99, 120, 125, 129, 148

705 SEQUENCER STATE
NO 10, 49, 64, 84, 100, 119, 126, 140

706 SEQUENCER STATE
NO 2, 8, 65, 79, 101, 117, 127
NC 106

707 SEQUENCER STATE
NO 4, 67, 89, 102
NC 1, 78

COATER UNLOADER-PC#2

MODICON CONTROLLER # 508 DATE 29 AUG 78 28401C

INPUT CROSS REFERENCE LIST

708 SEQUENCER STATE
NO 75,103

709 SEQUENCER STATE
NO 104,109

710 SEQUENCER STATE
NO 93,105

711 SEQUENCER STATE
NO 56
NC 57

COATER UNLOADER-PC#2

MODICON CONTROLLER # 508 DATE 29 AUG 78 28401C

DISABLED LINES

029 OFF
030 OFF
034 OFF
035 OFF
036 OFF
037 OFF
038 OFF
043 OFF
044 OFF
131 OFF
212 OFF
213 OFF
214 OFF
215 OFF
216 OFF
217 OFF
218 OFF
219 OFF
220 OFF
221 OFF

INTERNAL DISTRIBUTION

1–2. Central Research Library
3. Document Reference Section
4–5. Laboratory Records Department
6. Laboratory Records, ORNL RC
7. ORNL Patent Office
8. E. J. Allen
9. W. J. Armento
10. D. E. Bartine
11. R. L. Beatty
12. B. J. Bolfing
13. R. A. Bradley
14. A. J. Caputo
15. J. A. Carpenter, Jr.
16. W. G. Cobb
17. G. L. Copeland
18. W. P. Eatherly
19. A. L. Harkey
20. F. E. Harrington
21. R. E. Helms
22–24. M. R. Hill
25. J. R. Horton
26. D. R. Johnson
27–37. P. R. Kaston
38. J. J. Kurtz
39. W. J. Lackey
40. C. E. Lamb
41. A. L. Lotts
42. R. J. Lauf
43. F. L. Layton
44. J. E. Mack
45. J. W. Moore
46. A. R. Olsen
47. A. E. Pasto
48. J. E. Selle
49. D. P. Stinton
50. R. R. Suchomel
51. V. J. Tennery
52. S. M. Tiegs
53. T. N. Tiegs
54. L. J. Turner
55. L. C. Williams
56. B. A. Worley
57. R. W. Balluffi (consultant)
58. P. M. Brister (consultant)
59. W. R. Hibbard, Jr. (consultant)
60. M. J. Mayfield (consultant)
61. N. E. Promisel (consultant)
62. J. T. Stringer (consultant)

EXTERNAL DISTRIBUTION

63–64. DOE DIVISION OF NUCLEAR POWER DEVELOPMENT, Washington, DC 20545
Director

65. SAN-DEVELOPMENT, SAN DIEGO AREA OFFICE, P.O. Box 81325, San Diego, CA 92138
Senior Program Coordinator

66. DOE SAN FRANCISCO OPERATIONS OFFICE, 1333 Broadway, Wells Fargo Building, Oakland, CA 94612
Manager

67. DOE OAK RIDGE OPERATIONS OFFICE, P.O. Box E, Oak Ridge, TN 37830
Assistant Manager, Energy Research and Development

68–244. DOE TECHNICAL INFORMATION CENTER, P.O. Box 62, Oak Ridge, TN 37830
For distribution as shown in TID-4500 Distribution Category, UC-77 (Gas-Cooled Reactor Technology)

U.S. GOVERNMENT PRINTING OFFICE: 1978-748-189/327