MARTIN MARIETTA ENERGY SYSTEMS LIBRARIES
3 4456 0060926 9

ORNL/TM-6640

ornl

OAK
RIDGE
NATIONAL
LABORATORY

UNION
CARBIDE

Nuclear Fuel Fabrication and Refabrication Cost Estimation Methodology

R. R. Judkins
A. R. Olsen

OAK RIDGE NATIONAL LABORATORY
CENTRAL RESEARCH LIBRARY
CIRCULATION SECTION
4500N ROOM 175
LIBRARY LOAN COPY
DO NOT TRANSFER TO ANOTHER PERSON
If you wish someone else to see this report, send in name with report and the library will arrange a loan.

OPERATED BY
UNION CARBIDE CORPORATION
FOR THE UNITED STATES
DEPARTMENT OF ENERGY

Printed in the United States of America. Available from
National Technical Information Service
U.S. Department of Commerce
5285 Port Royal Road, Springfield, Virginia 22161
NTIS price codes—Printed Copy: A04; Microfiche A01

This report was prepared as an account of work sponsored by an agency of the United States Government. Neither the United States nor any agency thereof, nor any of their employees, makes any warranty, expressed or implied, or assumes any legal liability or responsibility for any third party's use or the results of such use of any information, apparatus, product or process disclosed in this report, or represents that its use by such third party would not infringe privately owned rights.

ORNL/TM-6640
Distribution
Category UC-80

Contract No. W-7405-eng-26
Metals and Ceramics Division

HTGR Fuel Recycle Development Program (189a OHO45)
Studies and Analyses – Task 100
Studies and Evaluations (189a 01303)
Hanford Engineering Development Laboratory (PO Y9U-M44-671)

NUCLEAR FUEL FABRICATION AND REFABRICATION COST ESTIMATION METHODOLOGY

R. R. Judkins A. R. Olsen

Date Published - November 1979

NOTICE This document contains information of a preliminary nature. It is subject to revision or correction and therefore does not represent a final report.

OAK RIDGE NATIONAL LABORATORY
Oak Ridge, Tennessee 37830
operated by
UNION CARBIDE CORPORATION
for the
DEPARTMENT OF ENERGY

MARTIN MARIETTA ENERGY SYSTEMS LIBRARIES
3 4456 0060926 9

CONTENTS

ABSTRACT 1

1. INTRODUCTION 1

2. REFERENCE FUEL DESIGNS 2
   2.1 Pressurized Water Reactor Fuels 2
   2.2 Spectral-Shift Control Reactor Fuels 3
   2.3 Heavy-Water Reactor Fuels 3
   2.4 Liquid-Metal Cooled Fast Breeder Reactor Fuels 4
   2.5 High-Temperature Gas-Cooled Reactor Fuels 7

3. FABRICATION AND REFABRICATION PROCESSES 7
   3.1 Pressurized Water Reactor Fuels 10
   3.2 Heavy-Water Reactor Fuels 14
   3.3 Liquid-Metal-Cooled Fast Breeder Reactor Fuels 16
   3.4 High-Temperature Gas-Cooled Reactor Fuels 20

4. COST ESTIMATION PROCEDURES 26
   4.1 Cost Estimates for PWR (or SSCR) Fuel Fabrication 28
   4.2 Cost Estimates for HWR Fuel Fabrication 32
   4.3 Cost Estimates for LMFBR Fuel Fabrication 32
   4.4 Cost Estimates for HTGR Fuel Fabrication 33
   4.5 Scaling Factors for Fabrication and Refabrication Plants 35

5. SUMMARY AND CONCLUSIONS 37

REFERENCES 40

Appendix A. SUMMARY OF CAPITAL, OPERATING, AND MATERIALS COSTS ESTIMATES FOR METAL-CLAD FUELS 41

Appendix B. SUMMARY OF CAPITAL, OPERATING, AND MATERIALS COSTS ESTIMATES FOR HTGR FUELS 61

NUCLEAR FUEL FABRICATION AND REFABRICATION COST ESTIMATION METHODOLOGY

R. R. Judkins A. R. Olsen

ABSTRACT

The costs for construction and operation of nuclear fuel fabrication facilities for several reactor types and fuels were estimated, and the unit costs (prices) of the fuels were determined from these estimates. The techniques used in estimating the costs of building and operating these nuclear fuel fabrication facilities are described in this report.

Basically, the estimation techniques involve detailed comparisons of alternative and reference fuel fabrication plants. Increases or decreases in requirements for fabricating the alternative fuels are identified and assessed for their impact on the capital and operating costs.

The impact on costs due to facility size or capacity was also assessed, and scaling factors for the various capital and operating cost categories are presented. The method and rationale by which these scaling factors were obtained are also discussed.

By use of the techniques described herein, consistent cost information for a wide variety of fuel types can be obtained in a relatively short period of time. In this study, estimates for 52 fuel fabrication plants were obtained in approximately two months. These cost estimates were extensively reviewed by experts in the fabrication of the various fuels, and, in the opinion of the reviewers, the estimates were very consistent and sufficiently accurate for use in overall cycle assessments.

1. INTRODUCTION

One of the purposes of the Alternative Fuel Cycle Evaluation Program (AFCEP) is to identify nuclear systems and nuclear fuel cycles that have high proliferation resistance and at the same time have commercial potential.

An important factor with respect to the commercial potential of nuclear fuel cycles is the cost associated with the fabrication of a candidate fresh or recycle fuel.* In this study, 21 reactor and fuel-cycle combinations were identified for the purpose of determining fabrication costs. There were 52 variations of fuels and fuel types, and these included fuels for light-water reactors (specifically, pressurized water reactors – PWR), spectral-shift control reactors (SSCR), heavy-water reactors (HWR) of the CANDU type, liquid-metal cooled fast breeder reactors (LMFBR), and high-temperature gas-cooled reactors (HTGR).

To facilitate the preparation of this very large number of estimates, a methodology was developed that related all metal-clad fuels to a reference PWR case previously reported.[1] Fabrication costs for HTGR fuels were estimated by scaling costs based on a conceptual design performed for a Target Recycle Plant (TRP) for HTGR fuels.[2] The methods used are similar to those in an earlier nuclear fuel fabrication cost study.[3] The current study provides considerably more detail and improves the consistency and accuracy of the estimates while retaining the basic techniques for comparison of reference and alternative fuel fabrication facilities.

The purpose of this paper is to describe the techniques used in the estimation of capital, operating, and material costs associated with the fabrication of nuclear fuels. Unit costs, that is, prices, of the fuels were determined by an economic analysis of the basic cost estimates, and these unit costs were previously reported.[4]

*In this paper, fabrication of recycle fuels is referred to as refabrication.

The ultimate test of economic studies such as that described here is, of course, the agreement of the estimates with the actual costs of constructing and operating the facilities. At best, it will be many years before some of the fuels considered in this report are fabricated. Regulatory and other changes that were not anticipated in this study will probably be in effect at that time, and the actual costs may be quite different from those estimated here. However, it is our belief that for the purpose of determining relative costs of a large number of fuels, the methods described herein are quite good and represent a very useful tool for helping to establish the commercial potential of a particular nuclear fuel.

Details of the methodology developed in this study are presented in the following sections. We have also included some details of the fuel designs that were considered and details of the fuel fabrication processes. These details are necessary because of the dependence of costs on fuel element designs and method of fabrication.

2. REFERENCE FUEL DESIGNS

2.1 Pressurized Water Reactor Fuels

Two fuel assembly designs were considered for the pressurized water reactor fuels. One of these was a Westinghouse Electric Corporation 17- by 17-rod-array fuel assembly,[5] and the other was a Combustion Engineering 16- by 16-rod-array fuel assembly.[6]

Although there are similarities in design of these fuel assemblies, important differences do exist. Design descriptions of the two fuel assemblies are presented in the following paragraphs.

In the Westinghouse design, 264 fuel rods, 24 guide thimble tubes, and 1 instrumentation tube are arranged within a supporting structure to form a fuel assembly. Figure 1 shows a full-length view of this fuel assembly, and Table 1 provides a summary of the components of the assembly. The structural integrity of the fuel assembly is maintained by a skeleton that consists of 2 end fittings or nozzles, 8 grids, the 24 guide thimble tubes, and the instrument tube. The guide thimble tubes are joined to the grids by swaging the tubes to sleeves within the grid. The bottom nozzle is attached to the guide thimble tubes with

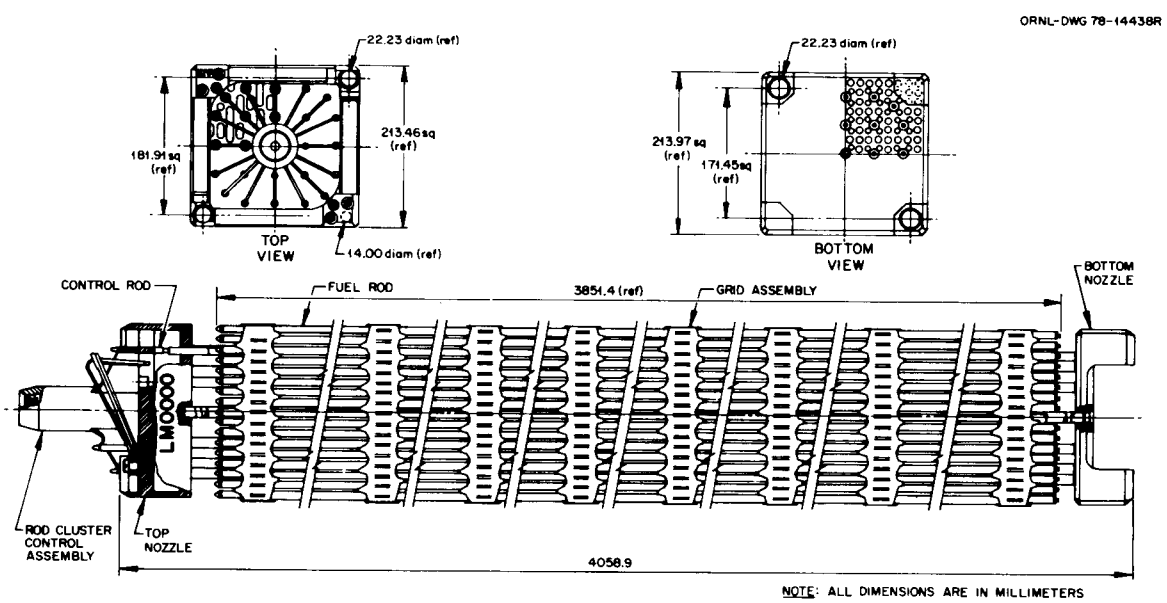

Fig. 1. Westinghouse 17 X 17 array PWR fuel assembly.

Table 1. Components of Combustion Engineering and Westinghouse PWR fuel assemblies

Component	Material		Number per fuel assembly	
	C-E	W	C-E	W
Guide tubes				
Instrument	Zircaloy-4	Zircaloy-4	1	1
Control rod	Zircaloy-4	Zircaloy-4	4	24
Spacer grids				
Top	Zircaloy-4	Inconel 718	1	1
Middle	Zircaloy-4	Inconel 718	10	6
Bottom	Inconel 625	Inconel 718	1	1
End fittings (nozzles)				
Top	304 SS/ Inconel 750 Springs	304 SS/ Inconel 718 Springs	1	1
Bottom	304 SS	304 SS	1	1
Fuel cladding	Zircaloy-4	Zircaloy-4	236	264
End plugs				
Top	Zircaloy-4	Zircaloy-4	236	264
Bottom	Zircaloy-4	Zircaloy-4	236	264
Plenum springs	302 SS	302 SS	236	264
Spacers	Al_2O_3		472	
Fuel loading (kg HM/fuel assembly)	UO_2, $(Pu,U)O_2$		427	461
	$(U,Th)O_2$ $(Pu,Th)O_2$		388	432

weld-locked screws threaded into the thimble end plugs. The top grid to top nozzle attachment is accomplished by welding the sleeves of the grid to the top nozzle adapter plate. Axial support of the fuel rods is provided by support springs and dimples in the grids.

The Combustion Engineering fuel assembly consists of 236 fuel rods, 4 control element guide tubes, 1 centrally located instrumentation guide tube, 12 fuel rod spacer grids, upper and lower end fittings, and a hold-down device. The guide tubes, spacer grids, and end fittings form the structural frame of the fuel assembly. The spacer grids and guide tubes are joined by welding, and the end fittings are mechanically attached to the four outer guide tubes. The bottom spacer grid is welded directly to the bottom end fitting. The spacer grids provide frictional axial restraint to fuel rod motion. Figure 2 shows a length view of this fuel assembly, and the components of the assembly are itemized in Table 1.

2.2 Spectral-Shift Control Reactor Fuels

Our assumption was that the fuel assembly designs for the SSCR were identical to the PWR fuel assembly designs.

2.3 Heavy-Water Reactor Fuels

The reference heavy-water reactor fuel is that used in the Canada deuterium-uranium (CANDU) pressurized heavy-water reactors.

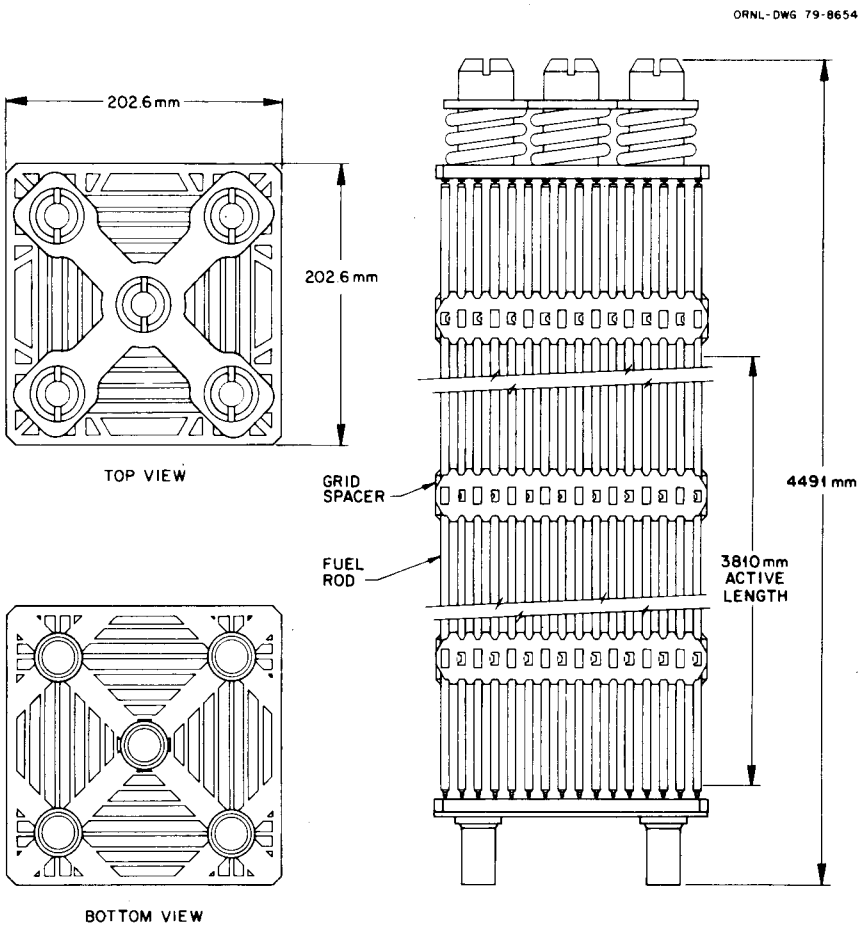

Fig. 2. Combustion Engineering system 80 – 16 X 16 array PWR fuel assembly.

The CANDU fuel assembly consists of 37 fuel rods welded to two end plates to form a cylindrical bundle. These end plates maintain separation of the fuel rods at the fuel assembly extremities. The separation of fuel rods at the fuel assembly mid-length is maintained by spacers brazed to the rods.[7]

Support of the fuel assembly within the reactor pressure tubes is provided by bearing pads brazed to the outer fuel rods near the ends of the rods and at their mid-length.

An isometric view of the CANDU fuel assembly is shown in Fig. 3, and the components of the fuel assembly are listed in Table 2.

2.4 Liquid-Metal Cooled Fast Breeder Reactor Fuels

Design parameters for the reference LMFBR fuels (and radial blankets) were provided by Argonne National Laboratory.[8] Three types of fuels were considered for the LMFBRs – oxides, carbides, and metals. The principal differences in the fuel assemblies are the number of fuel rods contained in each assembly and the heavy-metal content of each assembly.

A length view of a typical LMFBR fuel assembly is shown in Fig. 4, and the design parameters for the core and radial blanket assemblies are summarized in Tables 3 and 4 respectively.

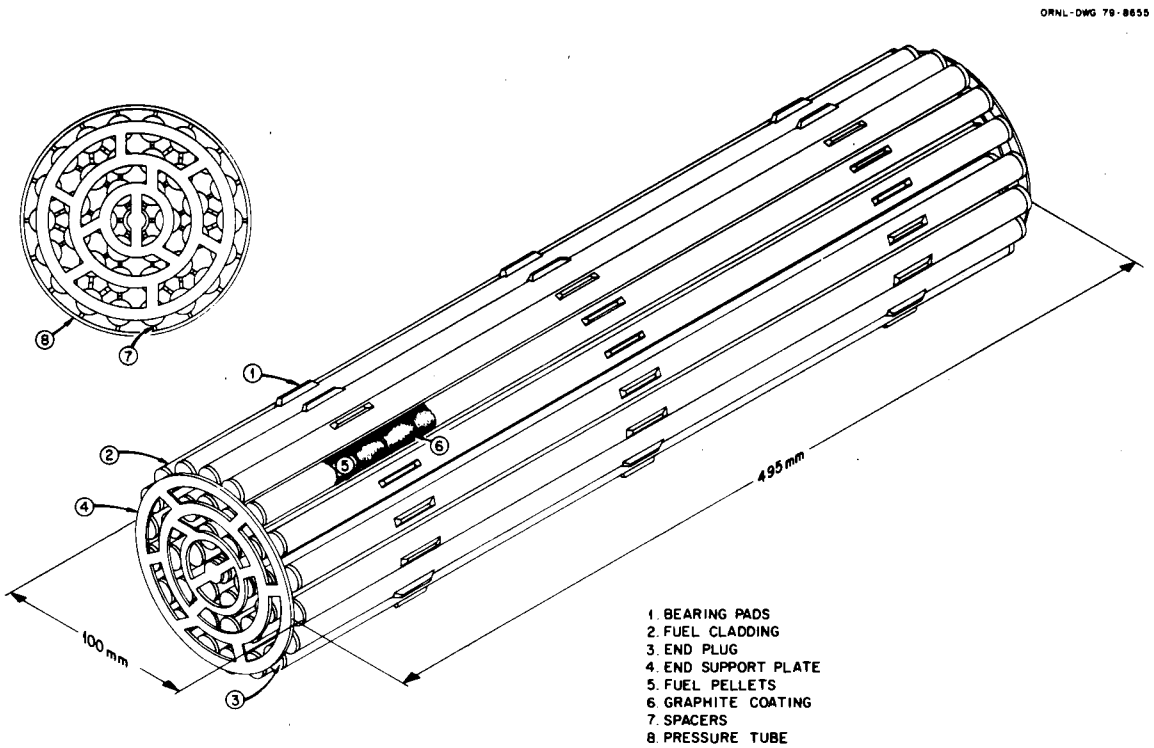

Fig. 3. 37-rod CANDU fuel assembly.

Table 2. Components of CANDU fuel assemblies

Component	Material	Number per fuel assembly
Fuel cladding	Zircaloy-4	37
End plugs		
Top	Zircaloy-4	37
Bottom	Zircaloy-4	37
Bearing pads	Zircaloy-4	54
Spacers	Zircaloy-4	84
End support plate		
Top	Zircaloy-4	1
Bottom	Zircaloy-4	1
Fuel loading (kg HM/fuel assembly)		
	UO_2, $(Pu,U)O_2$	18.7
	$(U,Th)O_2$, $(Pu,Th)O_2$	16.3

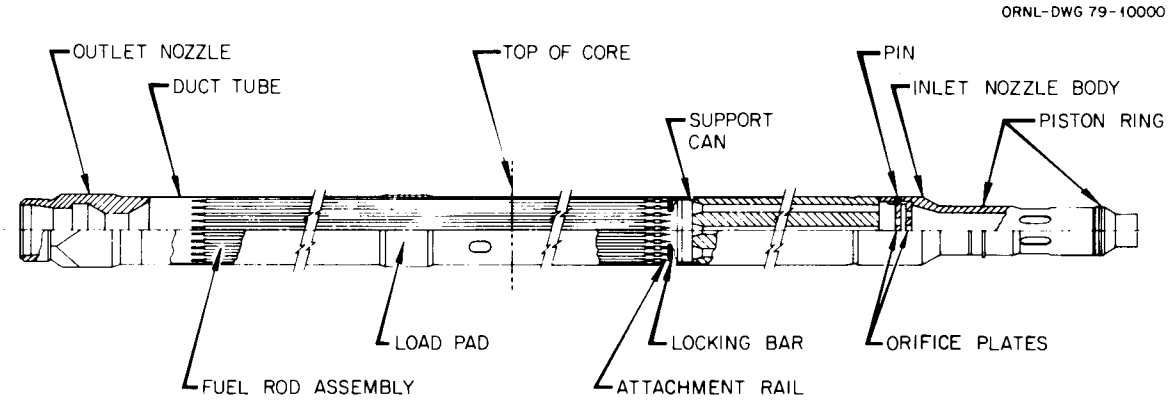

Fig. 4. LMFBR fuel assembly.

Table 3. Design characteristics of fuel used for cost estimations, liquid-metal cooled fast breeder reactors – core and axial blanket ANL NASAP data[a]

Characteristics	Oxides	Carbides	Metals
Reactor output, MW(e)	1000[b]	1000[b]	1000[b]
Fuel assemblies/core	357	258	303
Fuel assemblies/reload	178	129	151
Bonding	He	Na	Na
Fuel rods/assembly	271	169	169
Smear density, % TD	88	86	75 (U) 85 (Th)
Cladding material	316 SS	316 SS	316 SS
Cladding outside diameter, mm (in.)	7.37 (0.290)	8.89 (0.350)	8.89 (0.350)
Cladding inside diameter, mm (in.)	6.60 (0.260)	8.13 (0.320)	8.13 (0.320)
Pellet diameter, mm (in.)	6.35 (0.250)	7.75 (0.305)	7.04 (U) (0.277) (U) 7.49 (Th) (0.295) (Th)
Pellet length, mm (in.)	6.35 (0.250)	7.75 (0.305)	7.04 (U) (0.277) (U) 7.49 (Th) (0.295) (Th)
Pellet stack height, total, mm (in.)	1778 (70)	1778 (70)	1778 (70)
core, mm (in.)	1016 (40)	1016 (40)	1016 (40)

Fuel	Density[b] (% TD)	Heavy-metal content (kg)	
		Rod	Assembly
$(^{233}U,Th)O_2/ThO_2$	95	0.48[b]	128.9[b]
$(Pu,U)O_2/UO_2$	95	0.52	140.3
$(Pu,Th)O_2/ThO_2$	95	0.48	128.9
$(^{233}U,Th)C/ThC$	95	0.85[b]	143.1[b]
(Pu,U)C/UC	95	103	173.9
(Pu,Th)C/ThC	95	0.85	143.1
$^{233}U,Th/Th$	100	0.98[b]	164.9[b]
Pu,U,Zr/U	100	1.17	198.0
Pu,Th/Th	100	0.98	164.9

[a]Y. A. Chang, Argonne National Laboratory, personal communication to J. C. Cleveland, Oak Ridge National Laboratory (April–May 1978).

[b]Assumed values; data not available.

Table 4. Design characteristics of fuel used for cost estimations, liquid-metal cooled fast breeder reactors – radial blanket ANL INFCE data[a]

Characteristics	Oxides	Carbides	Metals
Reactor output, MW(e)	1000[b]	1000[b]	1000[b]
Fuel assemblies/core	234	186	204
Fuel assemblies/reload	47	37	41
Bonding	He	Na	Na
Fuel rods/assembly	127	127	127
Smear density, % TD	90	90	85[b]
Cladding material	316 SS	316 SS	316 SS
Cladding outside diameter, mm (in.)	11.94 (0.470)	11.99 (0.472)	11.71 (0.461)
Cladding inside diameter, mm (in.)	11.18 (0.440)	11.23 (0.442)	10.95 (0.431)
Pellet diameter, mm (in.)	10.87 (0.428)	10.92 (0.430)	10.08 (0.397)
Pellet length, mm (in.)	10.87 (0.428)	10.92 (0.430)	10.08 (0.397)
Pellet stack height, mm (in.)	1778 (70)	1778 (70)	1778 (70)

Blanket material	Density[b]		Heavy-metal content (kg)	
	(% TD)	(Mg/m^3)	Rod	Assembly
UO_2	95	10.41	1.51	192.22
ThO_2	95	9.50	1.38	174.85
UC	95	12.95	2.05	260.42
ThC	95	10.08	1.60	203.14
U	100	19.07	2.70	343.21
Th	100	11.66	1.76	223.24

[a]W. O. Harms, Oak Ridge National Laboratory, personal communication to P. R. Kasten, Oak Ridge National Laboratory (May 19, 1978).
[b]Assumed values; data not available.

2.5 High-Temperature Gas-Cooled Reactor Fuels

The reference HTGR fuel element is the General Atomic Company prismatic design.[9] Basically, the fuel element consists of a hexagonal prismatic graphite block loaded with particulate fuel contained within fuel rods of carbonized pitch.

An isometric view of the prismatic HTGR fuel element is shown in Fig. 5, and design characteristics of the fuel element are summarized in Table 5.

3. FABRICATION AND REFABRICATION PROCESSES

The fabrication processes considered for all metal-clad fuels were similar. All were based on forming pellets (or slugs in the case of metal fuels) of the fuel material and encasing them in the fuel cladding. There are, of course, important differences such as fuel composition, cladding and structural materials, fissile material content, and fuel rod pressurization or atmosphere requirements. Notwithstanding these differences, however, the basic requirements for fabrication of metal-clad fuels are the same – encase the fuel material in metal cladding to form fuel rods and then incorporate a group of these fuel rods into a mechanical assemblage to form the fuel element or assembly.

The fuel element for the HTGR is a hexagonal block of graphite about 79 cm (31 in.) long and 36 cm (14 in.) across the flats. The fuel consists of separate coated microspheres containing fissile and fertile material bonded into fuel rods, using a carbonaceous matrix; the fuel rods are then inserted into the

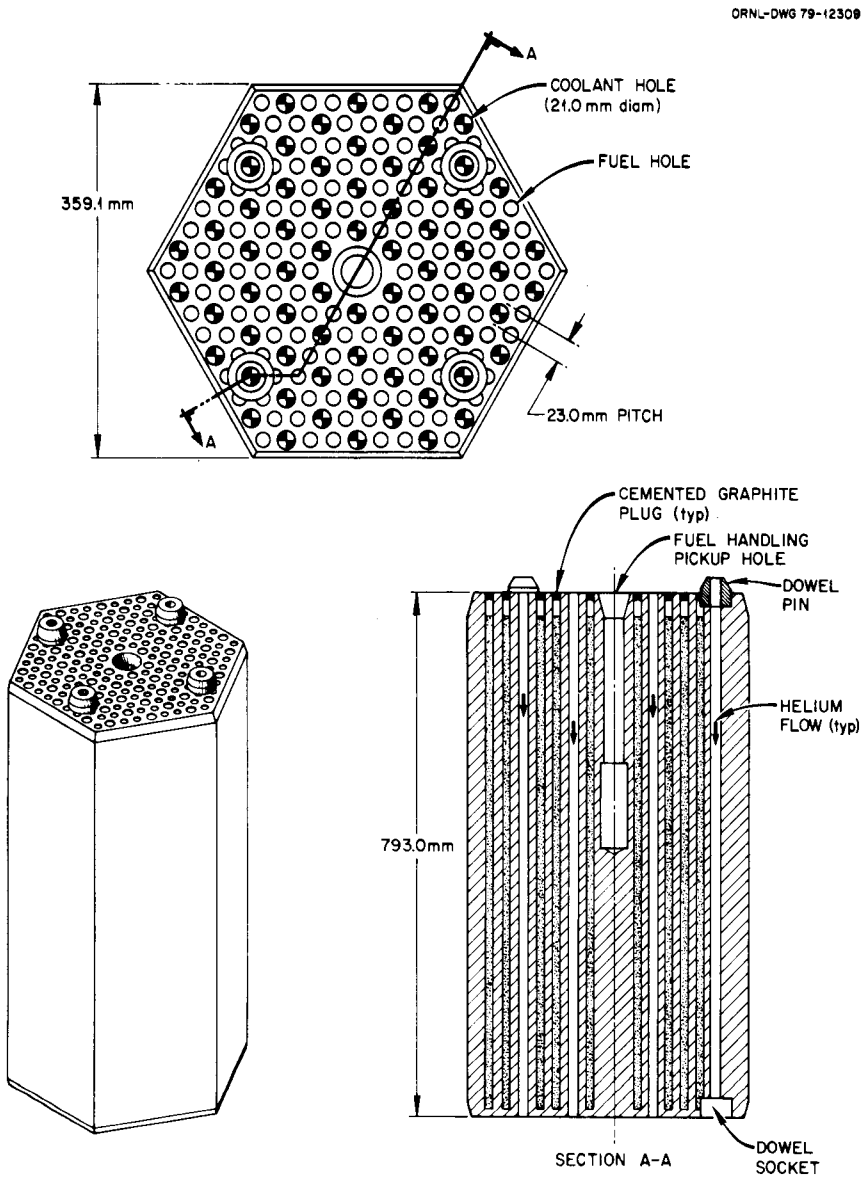

Fig. 5. HTGR standard fuel element.

graphite blocks to form the fuel elements. The fissile and fertile particles are ceramic kernels coated with layers of pyrocarbon with and without an intermediate layer of silicon carbide respectively. This fuel design permits variations in fissile and fertile particle composition and a wide range of fissile-to-fertile and moderator–to–heavy-metal atom ratios without modifying the basic fuel element design. Thus a large number of HTGR fuel cycles are possible without significantly affecting reactor-engineered features. For each reactor fuel concept and management scheme, there will be corresponding changes in the front and back end of the fuel cycle.

Summaries of the fabrication methods selected for this study are presented in the succeeding paragraphs, and these summaries are supplemented by functional flow diagrams that are descriptive of the requirements of the processes.

Table 5. Design characteristics of fuel used for cost estimations, high-temperature gas-cooled reactors[a]

	Standard elements[b]							
	OT-1	OT-2	OT-3	R-1 Fab-refab	R-2	R-3	R-4 Fab-refab	R-5
Reactor output, MW(e)	1332	1332	1332	1332	1332	1332	1332	1332
Fuel assemblies/core	5288	5288	5288	5288	5288	5288	5288	7548
Fuel assemblies/reload	1763	1322	661	1322	1763	1763	1322	1887
Reload frequency, years	1	1	0.5	1	1	1	1	1
Fueled holes/assembly	132	132	132	132	132	132	132	132
Fuel rod diameter, mm	8	11.7	11.1	11.7	15.9	15.9	15.9	15.9
Fuel rods/assembly	1493	1493	1493	1493	1493	1493	1493	1493
Coolant holes/assembly	72	72	72	72	72	72	72	72
Coolant hole diameter, mm	21	21	21	21	21	21	21	21

Cycle identity	Production rate[c] (elements/year)	Fuel	C:HM[d]	Fissile particle		Fertile particle		Heavy-metal content/assembly (kg)		
				Composition	Kernel diameter (μm)	Composition	Kernel diameter (μm)	Fissile particles	Fertile particles	Total
OT-1	106,560	LEU ^{235}U-OT	450	UC_2	500	None		4.88		4.88
OT-2	93,110	MEU ^{235}U/Th	385	UC_2	350	ThO_2	500	3.09	2.49	5.58
OT-3	84,970	MEU ^{235}U/Th	348	UC_2	350	ThO_2	500	2.62	3.5	6.12
R-1, fabrication	74,820	MEU ^{235}U/Th	295	UC_2	350	$(Th/U)O_2$	450	2.84	4.11	6.95
R-1, refabrication	56,080	MEU ^{233}U/Th	240	UCO	350	$(Th/U)O_2$	450	4.46	4.11	8.57
R-2	43.130	MEU ^{233}U/Th	195	UC_2	350	ThO_2	500	3.99	7.14	11.13
R-3	88,400	Pu/Th	375	$PuO_{1.8}$	200	ThO_2	500	0.84	4.59	5.43
R-4, fabrication	43,410	HEU ^{235}U/Th	169	UC_2	200	ThO_2	500	0.74	11.24	11.98
R-4, refabrication	40,370	HEU ^{233}U/Th	170	UCO	360	ThO_2	500	0.65	11.24	11.89
		MEU ^{235}U/Th	162	UCO	360			1.24	11.24	13.01
R-5	34,040	HEU ^{233}U/Th	143	UO_2	360	ThO_2	500	0.56	13.5	14.06

[a]Source is General Atomic data to NASAP, March and July, 1978. A. J. Neylan, General Atomic Company, personal communication to K. O. Laughon, Department of Energy (Mar. 3, 1978); R. K. Lane, General Atomic Company, personal communication to A. R. Olsen, Oak Ridge National Laboratory (July 17, 1978).

[b]Control elements contain fewer fuel holes/assembly and lower heavy-metal contents.

[c]Production rate based on HM output of 2 MT/d at effective full production.

[d]C:HM: Ratio of carbon/assembly to heavy metal/assembly.

3.1 Pressurized Water Reactor Fuels

Eight PWR fuels were considered in this study: $(^{235}U,U)O_2$, $(^{233}U,U)O_2$, $(^{235}U,Th)O_2$, $(^{233}U,Th)O_2$, $(Pu,U)O_2$, spiked $(Pu,U)O_2$, $(Pu,Th)O_2$, and spiked $(Pu,Th)O_2$. In this report the convention for designating fuels will be to identify the fissile material (e.g., ^{233}U or Pu), the fertile or diluent material (e.g., U or Th), and the form of the fuel (e.g., oxides for all PWR cases). Spiking refers to the addition of highly radioactive materials to the fuel.

As stated earlier, two PWR fuel assembly designs were used as references in this study. The Combustion Engineering design (see Fig. 2) was used for $(^{233}U,Th)O_2$ and $(Pu,Th)O_2$ fuels, and the Westinghouse design (see Fig. 1) was used for all other PWR fuels. The same basic fabrication process may be used for either fuel assembly design. Thus, generic descriptions of the processes are given here with the recognition that minor differences in operations, particularly in fuel assembly fabrication, may be necessary because of differences in design. A schematic summary of the functional operations is given in the flowsheet in Fig. 6.

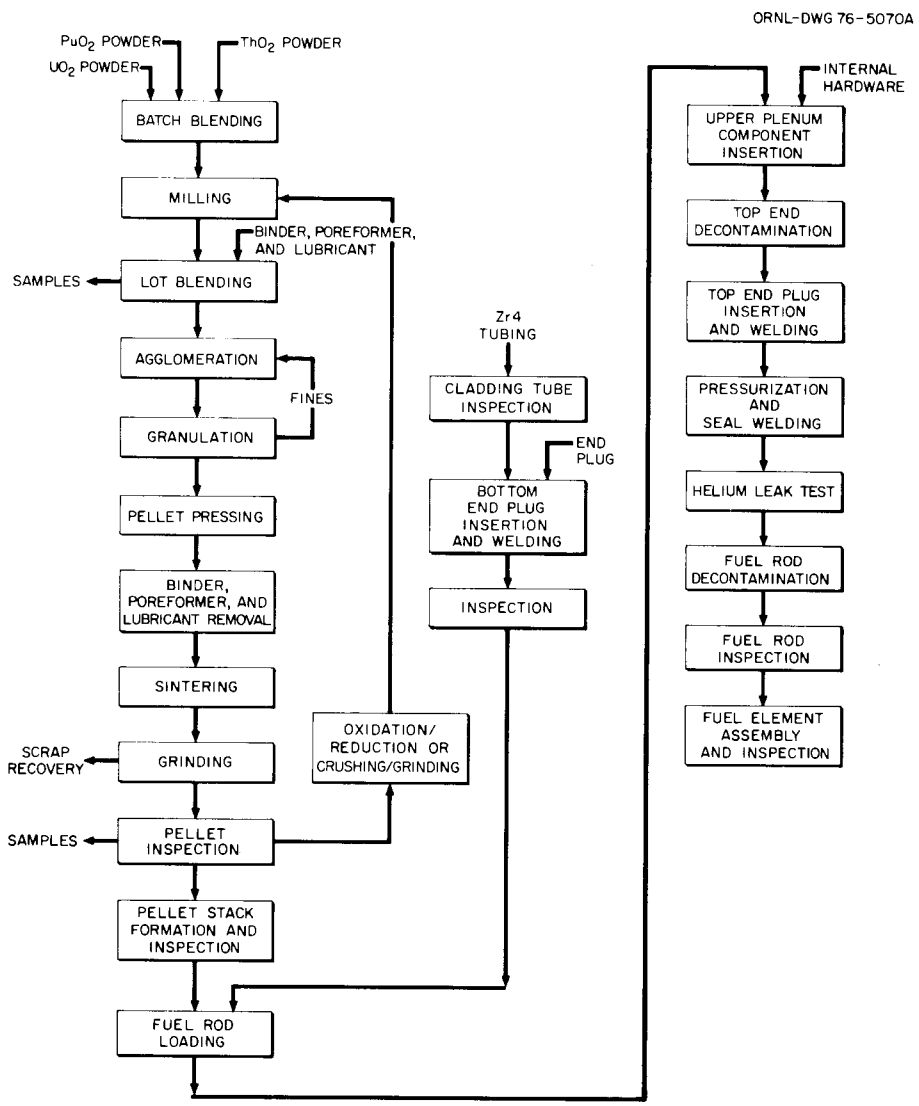

Fig. 6. PWR oxide recycle fuel element fabrication flowsheet.

3.1.1 Conversion

For the contact-operated and -maintained plants – the ^{235}U fuel plants – feed materials include enriched uranium as UF_6 and thorium as thorium nitrate tetrahydrate (TNT) crystals.

Conversion of UF_6 to UO_2 is accomplished by the ammonium diuranate route (see Fig. 7). UF_6 in 30-in. (2-ton) cylinders is placed in steam- or electrically heated chests, and the UF_6 is vaporized. The vaporized UF_6 is transferred to a hydrolysis tank where it is hydrolyzed to uranyl flouride (UO_2F_2). The concentration and pH of the solution are adjusted, and the uranium is precipitated with ammonia as ammonium diuranate (ADU). The ADU slurry is centrifuged and transferred to a rotary calciner for calcination in a reducing (H_2) atmosphere to UO_2. The UO_2 powder is blended and placed in interim storage for subsequent processing.

Conversion of TNT to ThO_2 is accomplished by the oxalate precipitation process (see Fig. 8). In this process the TNT is dissolved in water, the thorium and free-acid concentrations are adjusted, and the thorium is precipitated as thorium oxalate by addition of oxalic acid. The thorium oxalate slurry is filtered

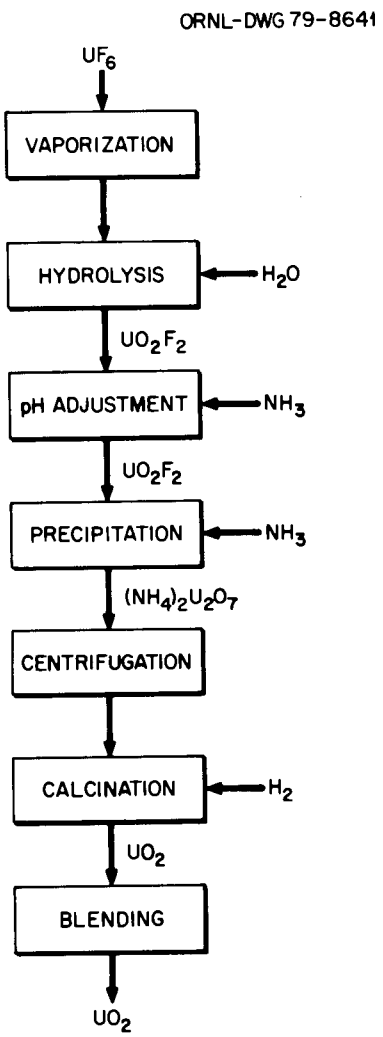

Fig. 7. UF_6 to UO_2 conversion flowsheet.

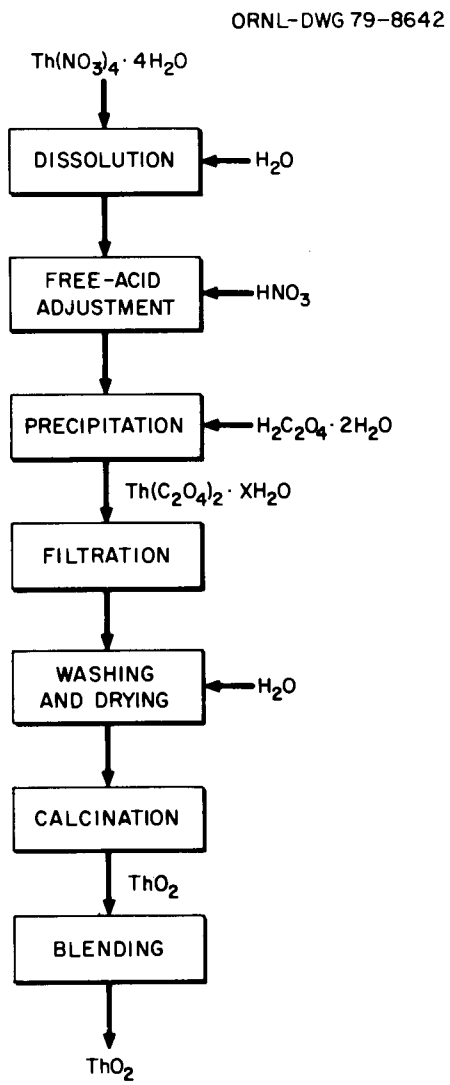

Fig. 8. $Th(NO_3)_4 \cdot 4H_2O$ to ThO_2 conversion flowsheet.

on a plate-and-frame filter press, washed, and air-dried in the press. The filter cake is removed from the press frames and placed in Inconel boats for calcination to ThO_2. This calcination is performed in an air atmosphere at a maximum temperature of 970°C.

The ThO_2 powder is blended to form batches, or lots, of powder, and portions of these lots are then blended with appropriate quantities of UO_2 to form the master blend of powder feed for subsequent pelletizing operations.

For the remotely operated plants – ^{233}U and Pu fuels – feed materials are heavy-metal-oxide powders. Thus, conversion operations are not treated as part of these fabrication processes.

3.1.2 Pelletization

The pelletization process includes powder preparation, slugging and granulating, lubricant addition, and pressing of the powder into compacts.

Powder preparation may include milling, binder and pore former additions, and drying; or it may simply consist of a milling operation. For our systems, we chose the milling-operation-only option for the powder preparation step.

In order to obtain a free-flowing feed for the pellet press and to obtain an essentially homogeneous feed, usual practice is to press the oxide powder into low-density compacts (the slugging operation) and then granulate the compacts by crushing and screening. The granulated powder is mixed with a solid die lubricant (Sterotex) and transferred to a feed hopper for the pellet press.

The MO_2 pellet press feed material is fed to the die cavities of a rotary pellet press and compacted to a green density of 55 to 65% of the theoretical density of the MO_2. These green (green refers to the unfired condition) pellets are placed in molybdenum boats for sintering in a reducing atmosphere in a sintering furnace.

3.1.3 Sintering and grinding

The green MO_2 pellets are fed into a sintering furnace in the molybdenum boats. The rate of feed and sintering temperatures are established for each batch of MO_2 powder by performing sintering (or pilot) tests on the individual batches of powder. The activity (sinterability) of the powder varies somewhat from batch to batch, and the sintering test is the most reliable method for establishing appropriate sintering conditions. Depending on the powder used, periods from 4 to 8 hr at temperatures of 1500 to 1800°C may be required to obtain acceptable pellets.

Subsequent to the sintering operation, the acceptability of the density of the pellets is established, and the pellets are ground to the proper diameter, using a centerless grinder. Either wet or dry grinders may be used, but if wet grinding is selected, a subsequent drying operation is required.

The sintered and ground MO_2 pellets are formed into stacks and are staged for loading into fuel rods.

3.1.4 Fuel rod loading

The pellet stacks are transferred to a vibratory loader, weighed, and loaded into fuel rods (the fuel rods at this point already have their bottom end plugs welded in place). The stack height and plenum gap of each rod are verified, the lip area of the upper end of the loaded rod is decontaminated, a plenum spring is inserted, and the top end plug is inserted and welded. The fuel rod is pressurized with helium to a prescribed level through a pressurization hole in the top end plug, and this hole is welded to seal the rod.

3.1.5 Fuel rod inspection

Fuel rod inspection operations include x-ray inspection of weld areas, fluoroscopic examination of the rods for pellet chips or voids, leak detection, rod assay, and dimensional inspections.

The loaded and welded rods are transferred to the fluoroscope station, where all rods are visually scanned to verify the integrity of the pellet stack. This includes checks for pellet chips or voids and proper plenum gap.

From the fluoroscope station, the fuel rods are transferred to the x-ray station, where the welded areas of the top and bottom end plugs are inspected. These inspections include radiographic examinations of the plug-to-tubing girth welds and the top end plug seal weld.

The leak detection system consists of several evacuation chambers that can accommodate 25 to 50 fuel rods each and a helium mass spectrometer system. After the fuel rods are loaded and the chambers are evacuated, the chambers are valved to the mass spectrometer system. Since the rods are pressurized with helium, an indication of helium by the mass spectrometer indicates a leak in at least one rod. If a leaking rod is detected, the rods are subdivided and retested until all leaking rods are positively identified and removed for rework or repair.

All fuel rods are assayed to verify proper fissile material content. For the unspiked fuels, the assay device is an active gamma scanner. The use of this device involves exposing the fuel rods to a time-controlled neutron flux (generally ^{252}Cf source) and then counting the fission product gamma radiation. For the spiked fuels, this method is not applicable because of the high levels of gamma radiation associated with the spiking material. For these fuels, an assay device that provides for counting of prompt and delayed fission neutrons is used.

Dimensional inspections include fuel rod length, straightness, and outside-diameter verification. These inspections are performed on automated equipment calibrated by use of standard acceptable rods.

In all inspection operations, automated transfer systems provide for segregation of acceptable and unacceptable fuel rods. Unacceptable fuel rods are reworked or repaired, as appropriate.

3.1.6 Fuel assembly fabrication

A prefabricated fuel assembly skeleton is positioned in the fuel assembly loading station. Acceptable fuel rods are pulled from a loading rack or magazine into the skeleton, to which the end fittings are attached. During the loading of fuel rods into the assembly skeleton, all components are in a horizontal position. Subsequent to securement of the end fittings to the loaded assembly, the assembly is rotated to a vertical position and transported to the fuel assembly inspection area. All subsequent operations are performed with the fuel assembly in a vertical position.

3.1.7 Fuel assembly inspection

Fuel assembly inspection operations include verification of acceptability of several dimensional characteristics that include length, fuel rod spacing, bow and twist, and tilt. All of these operations are amenable to the use of automated inspection equipment, and we envisioned the use of such equipment in these inspections.

Subsequent to verification of the dimensional characteristics of the fuel assemblies, they are washed and dried, inspected for cleanliness, checked to assure the ability to accept control elements, and finally packaged for shipment. For the unspiked fuels, fuel assembly shipping containers of the type currently in

use by the commercial fuel vendors are used. For the spiked fuels, modified spent fuel shipping casks are used. The fuel assemblies are placed in a support frame of the shipping container and rotated to a horizontal position in the container. The container is sealed and placed in interim storage for loading onto the shipping vehicle.

3.2 Heavy-Water Reactor Fuels

Nine HWR fuels were addressed in this study: UO_2 (natural), $(^{235}U,U)O_2$, $(^{233}U,U)O_2$, $(^{235}U,Th)O_2$, $(^{233}U,Th)O_2$, $(Pu,U)O_2$, spiked $(Pu,U)O_2$, $(Pu,Th)O_2$, and spiked $(Pu,Th)O_2$. The fuel assembly design was described earlier in this report, and it was assumed that the same design was appropriate for all the fuels considered. The fuel fabrication process is similar to that used for PWR fuels, and the reader will be referred to certain sections of the PWR fuel fabrication discussion. Reference is also made to the fabrication flowsheet presented in Fig. 9.

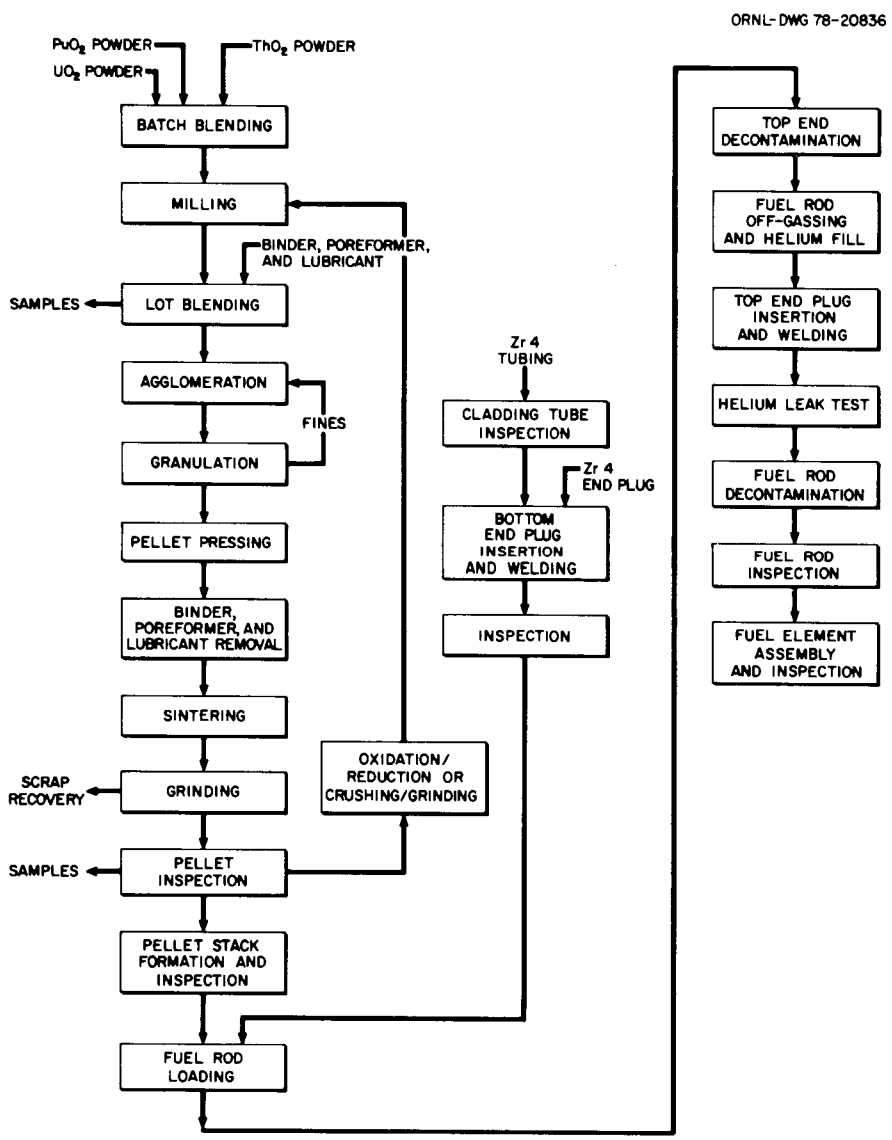

Fig. 9. HWR oxide recycle fuel element fabrication flowsheet.

3.2.1 Conversion

Conversion operations are applicable only to the contact operation facilities, and the methods for UF_6 to UO_2 and $Th(NO_3)_4 \cdot 4H_2O$ to ThO_2 conversions are identical to those described for the PWR fuels.

3.2.2 Pelletization

The pelletization process for HWR fuels is identical to that described for PWR fuels, even though the sizes of the pellets differ somewhat.

For the high-burnup HWR fuels, a slight variation in pellet design is necessary. Annular pellets in the upper ends of these fuel rods provide fission gas plenums. However, this variation does not impact appreciably on the pelletization operation. A modification of the punch and die system is made to form the annular pellets.

3.2.3 Sintering and grinding

Sintering and grinding of the HWR fuel pellets are identical to the operations described for PWR fuels.

3.2.4 Fuel rod loading

Loading of HWR fuel rods is quite similar to the technique described for PWR fuel rods. The HWR fuel rods are much shorter than the PWR rods and hence require fewer pellets per rod. The differences that exist are primarily related to handling of the rods; that is, many more smaller rods must be loaded. Thus, more fuel rod loading and welding stations are required, but more rods pass through the process operation per unit of time.

The HWR fuel rods do not require plenum hardware or pressurization (the rods are backfilled with helium to a very slight positive pressure). Thus these operations are not included in the fabrication lines.

3.2.5 Fuel rod inspection

The basic inspections for HWR fuel rods are the same as those for PWR fuel rods.

3.2.6 Fuel assembly fabrication

Fuel rods for the HWR are equipped with external spacers and bearing pads to provide rod-to-rod and fuel assembly–to–pressure tube spacing respectively. These appendages are brazed to the tubes prior to loading with pellets.

The fuel rods are collected and assembled in a welding fixture. End plates are attached to the bundle of rods by resistance welding of the end plates to the end plugs of the fuel rods. Fabrication of HWR fuel assemblies is very simple and straightforward compared with the fabrication of PWR fuel assemblies.

3.2.7 Fuel assembly inspection

Inspection of HWR fuel assemblies consists of verification of dimensional characteristics, inspection of end-plate welds, and verification of cleanliness. For those fuel assemblies that have fuel rods with plenums, an inspection of rod placement, that is, plenum position of individual rods within the assembly, is required.

Subsequent to the inspection operations, the fuel assemblies are cleaned and packaged for shipment. As was the case with spiked PWR fuels, spiked HWR fuels are shipped in modified spent-fuel shipping casks, and fresh fuels are shipped in the shipping containers used by the commercial vendors.

3.3 Liquid-Metal-Cooled Fast Breeder Reactor Fuels

Sixteen LMFBR fuels and nine radial blanket fuels were addressed in this study and included oxides, carbides, and metals. Flowsheets for the various fuel types are presented in Figs. 10–12. A general description of the fabrication process for each type of fuel is presented, and in those instances where identical operations are involved, the reader is referred to the appropriate sections.

The basic fuel assembly design was presented earlier in this report, and this basic design is applicable to all the fuel and radial blanket assemblies. There are, of course, important differences such as number of fuel rods in an assembly, but these differences are not relevant to the present discussion.

3.3.1 Oxide fuels

3.3.1.1 Conversion. Conversion is applicable to only one of the LMFBR core assembly fuels – $(^{235}U,Th)O_2/ThO_2$ – and to six of the radial blanket cases. In all other cases, feed material to the fabrication plant is the product of a conversion process performed at the reprocessing plant.

Two conversion processes are important to this discussion – the conversion of UF_6 to UO_2 and the conversion of $Th(NO_3)_4 \cdot 4H_2O$ to ThO_2. These conversion processes were described in the discussion of pressurized water reactor fuel fabrication.

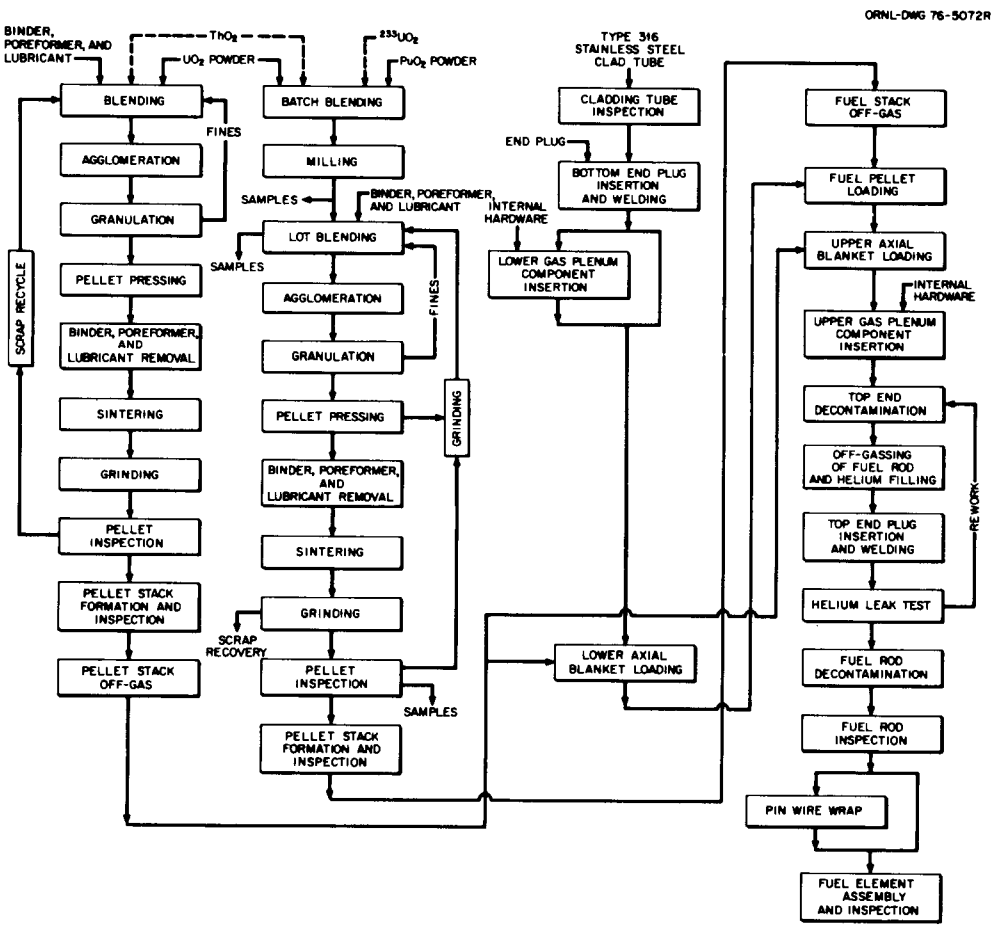

Fig. 10. FBR oxide fuel element fabrication flowsheet.

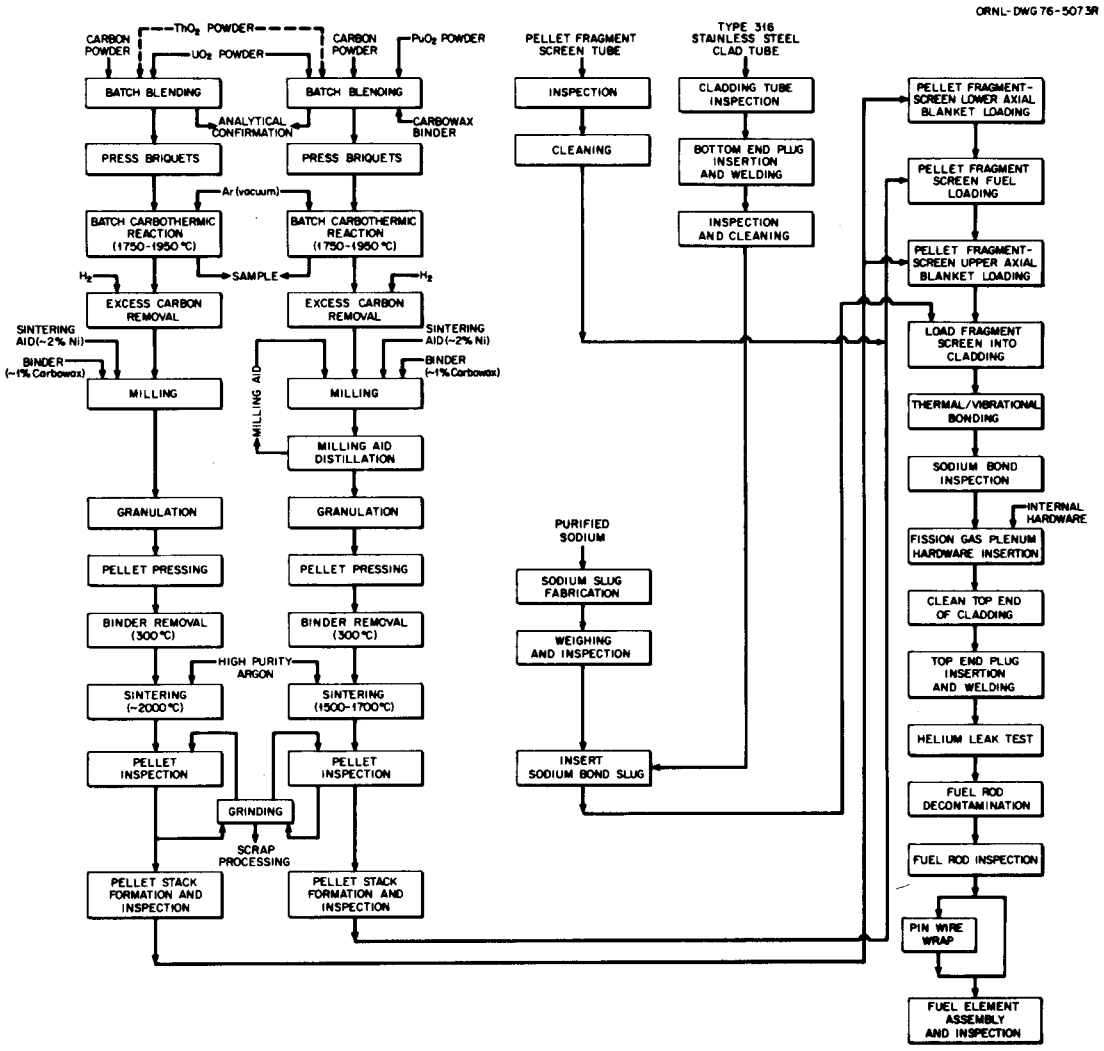

Fig. 11. FBR carbide fuel element fabrication flowsheet.

3.3.1.2 Powder receipt and preparation. Feed materials for the ^{233}U and Pu fuels are the heavy-metal oxides. These powders are received as master mixes from the reprocessing plant. For the ^{233}U and spiked Pu fuels, the powders are shipped in shielded casks. The oxide powders are transferred into the interim storage area of the fabrication plant and are weighed, sampled, and analyzed to verify that specification requirements are met. Typical analyses include isotopic distribution, homogeneity, particle size and/or surface area, impurities, moisture, and oxygen-to-metal ratios.

3.3.1.3 Pelletization. Acceptable powders are subdivided, blended, milled, and combined with necessary lubricants, binders, and pore formers. These well-blended mixtures are then slugged and granulated as described for PWR fuels. All pelletization operations are essentially identical to those discussed for PWR fuels.

3.3.1.4 Sintering and grinding. Sintering and grinding operations are the same as those described for PWR fuels.

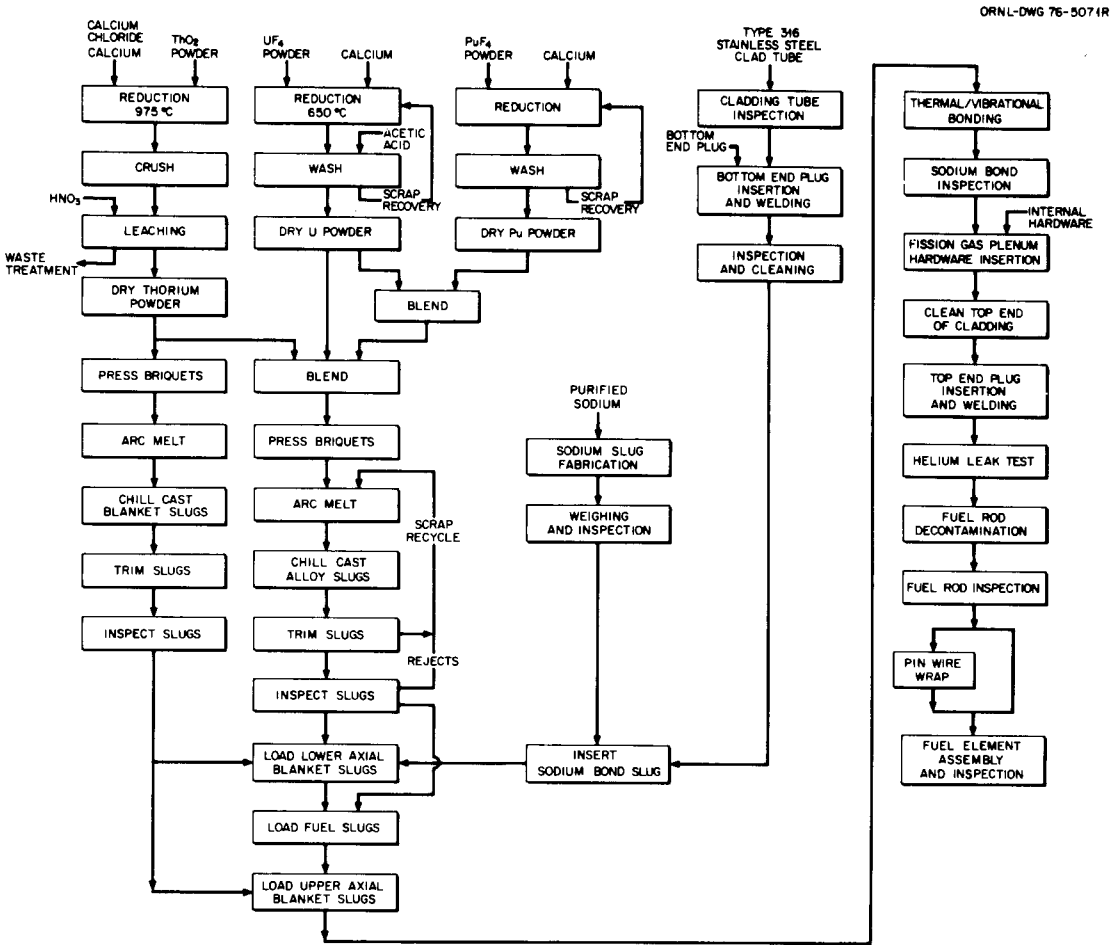

Fig. 12. FBR metal fuel element fabrication flowsheet.

3.3.1.5 Fuel rod loading. Loading of LMFBR fuel rods is quite similar to the loading of PWR fuel rods. However, there are some important differences.

The first end-plug welding and lower plenum hardware insertion are performed in the hardware fabrication portion of the facility and are inspected prior to transfer to the fuel rod loading area. Axial blanket pellets (natural or depleted UO_2 or ThO_2) are received from a vendor, inspected, placed in interim storage, and transferred, as needed, to the fuel rod loading area. The lower axial blanket pellets, fuel pellets, upper axial blanket pellets, and upper plenum hardware are loaded into fuel rods. The rods are evacuated and backfilled with helium, and the top end plug is inserted and welded. The fuel rods are inspected for weld integrity by x-ray techniques, leak tested, assayed, and inspected for dimensional characteristics.

Wrapping wire is applied to each fuel rod by inserting one end of the wire into an end plug hole and spot-welding the wire to the plug. The rod is rotated to wind the wire. The proper spiral is assured by a fixture that moves along the length of the rod as the rod is rotated. The end of the wire is clamped, cut to proper length, inserted into a hole in the second end plug, and spot-welded. These wire-wrapped fuel rods are inspected and placed in storage prior to fuel assembly.

3.3.1.6 Fuel assembly. Wire-wrapped fuel rods are assembled into layers (called strip layers), which are loaded in sequence into the lower shield and nozzle assembly and locked in place. The hexagonal duct or

shroud, with upper handling socket, is placed over the fuel rods, rested against the lower shield and nozzle assembly, and welded in place. The completed assembly is dimensionally inspected, weighed, and cleaned prior to transport to a storage area. Fuel assemblies are stored vertically and are transported on a stiff frame to the shipping container loading area. There, they are rotated to a horizontal position, and the shipping container is secured.

3.3.2 Carbide fuels

3.3.2.1 Conversion. For the fabrication of UC and ThC radial blanket assemblies, conversion processes include UF_6 to UO_2 to UC, and $Th(NO_3)_4$ to ThO_2 to ThC. The UF_6 to UO_2 and the $Th(NO_3)_4$ to ThO_2 conversion processes were described for the PWR fuels, and these processes are applicable here.

After conversion of the feed materials to UO_2 or ThO_2 [or receipt of oxide powders for the ^{233}U and plutonium fuels or radioactively contaminated (recycled) ThO_2], conversion to the carbides is accomplished by a batch carbothermic reaction in which the heavy-metal oxides are reacted with elemental carbon at 1750 to 1950°C. Excess carbon is removed by reaction with hydrogen.

3.3.2.2 Pelletization. The carbide powders are milled, and a binder and sintering aid are added. The powders are slugged, granulated, and then pressed into pellets.

3.3.2.3 Sintering and grinding. The pellets are heated in an argon atmosphere to remove the binder and are sintered in argon to high density. The pellets are visually inspected for structural defects and are ground to size on a centerless grinder. Acceptable pellets are accumulated for pellet stack formation and inspection.

3.3.2.4 Fuel rod loading. Because of the tendency of carbide pellets to chip or fragment, a metal screen or shroud is used as a liner for the fuel cladding. Axial blanket pellets are received from a vendor, inspected, and loaded into the fragment screen. Fuel pellets are loaded, and the upper axial blanket pellets are loaded into the fragment screen. Fuel cladding equipped with a lower end plug is transferred to the fuel rod loading area. A purified sodium metal slug and the loaded fragment screen are inserted into the cladding. The loaded rod is heated and vibrated to fill the void space in the fuel rod with sodium. This sodium bond is inspected to assure that all voids are filled. Fission-gas plenum hardware is inserted, the top end of the cladding is cleaned, and the top end plug is inserted and welded to the cladding. The finished fuel rod then proceeds through the same inspection processes as do the LMFBR oxide fuel rods.

It is especially important to note that because of the pyrophoricity of the heavy-metal carbides and the ease of oxidation of sodium, all operations involving the handling of these materials are performed in dry inert-gas atmospheres.

The heavy-metal carbide fuel rods are wire-wrapped in the same manner as are the oxide fuel rods.

3.3.2.5 Fuel assembly. Fuel assembly fabrication and inspection are the same as described for the LMFBR oxide fuels.

3.3.3 Metal fuels

3.3.3.1 Conversion. Conversion processes are applicable to all metal fuels. For the uranium (contact) radial blanket fabrication plants, UO_2 is prepared from UF_6 by the ADU process. The UO_2 is converted to UF_4 (green salt) by hydrofluorination. The UF_4 is the feed material for metal fabrication.

For thorium metal production, ThO_2 is prepared by the oxalate process, and this ThO_2 is used as the feed for metal production.

For plutonium metal production, PuO_2 is hydrofluorinated to PuF_4, which is the feed material for metal production.

3.3.3.2 Reduction and casting. The uranium and plutonium fluorides and thorium oxide may all be reduced by calcium to their elemental forms. The product in each instance is a metal powder that is pressed into briquets, melted in a vacuum induction furnace, cast into billets, scalped, and chill-casted into metal fuel slugs. All operations involved with the handling of the dry metal powders, molten metals, or hot metals are performed in inert atmospheres or in vacua.

3.3.3.3 Fuel rod loading. The metal slugs are formed into stacks for fuel rod loading. Axial blanket slugs are obtained from a vendor, inspected, and transferred to the rod loading station. A purified sodium metal slug is inserted. The lower axial blanket, core, and upper axial blanket fuel slugs are loaded into the cladding. Bonding is accomplished by the thermal-vibrational technique described for the carbide fuels. The sodium bond is inspected, and the upper plenum hardware and end plug are inserted. The upper end plug is welded and inspected, the wire wrap is applied and inspected, and the fuel rod is transferred to storage prior to fuel assembly fabrication and inspection.

3.3.3.4 Fuel assembly fabrication and inspection. Metal fuel assembly fabrication and inspection is performed in the same manner as for the carbide fuels.

3.4 High-Temperature Gas-Cooled Reactor Fuels

The specific cycles addressed in this study are those described in two other papers addressing the reactor characteristics. Three once-through cycles with stowaway of the spent fuel are:[10] (1) the HTGR once-through current MEU/Th cycle, (2) the HTGR once-through optimized MEU/Th cycle, and (3) the HTGR once-through LEU cycle. A second paper[11] discusses reactor characteristics for the HTGRs utilizing fuel with recycle options. Three primary cycles involving two with denatured uranium and a plutonium converter are supplemented with two cycles involving highly enriched uranium. The cycles are: (1) the MEU-^{235}U/Th with uranium recycle, (2) the MEU-^{233}U/Th with uranium recycle, (3) the Pu/Th converter with plutonium recycle and ^{233}U makeup, and (5) the HEU-^{233}U/Th cycle with highly enriched ^{233}U makeup from an external source.

A summary description of the fresh (unirradiated) fuel elements for each cycle is given in Table 6, and the reactor mass discharge data are given in Table 7. Both tables are based on the fuel requirements and reactor mass flow for the equilibrium cycle.

Both fabrication and refabrication involve essentially the same process steps as shown in Figs. 13 and 14. The essential differences are only in the operational modes. Fresh fuel can be processed with direct operator-equipment interfacing and hands-on equipment maintenance in a standard fuel manufacturing type of facility. Recycle fuel requires heavy shielding around the process equipment and remote operation and equipment maintenance.

A simplified functional flow diagram for both fabrication and refabrication is presented in Fig. 14 to assist in the description. The main functional areas have been numbered 1 through 7, while the typical interfaces for a refabrication plant are shown in the unnumbered boxes surrounded by dotted lines.

The following sections are brief descriptions of the processes in each of the functional areas.

3.4.1 Fuel receiving and storage

In a fabrication plant the principal inputs are uranium as enriched UF_6 and thorium as ThO_2 or $Th(NO_3)_4$. These are stored and used as the feed to the fuel kernel fabrication processes. In a refabrication plant the uranium is typically received from a colocated reprocessing plant as uranyl nitrate solution or as preformed oxide microspheres from a remote reprocessing plant. For some of the fuel cycles discussed in

Table 6. Average fresh fuel element description at equilibrium

Characteristics	Once-through cycles			Recycle cycles				
	LEU OT1	MEU-Th annual OT2	MEU-Th semiannual OT3	MEU-^{235}U/Th 3 yr R1	MEU-^{233}U/Th 3 yr R2	Pu/Th 3 yr R3	HEU Old. ref. R4	HEU-233 R5
Fuel elements (element/segment)								
Makeup element	1760	1322	661	980	1763	1763	500	245
23R element				342			733	1642
25R element							89	
Other								
Total	1760	1322	661	1322	1763	1763	1322	1887
Heavy-element loadings (kg/element)								
Makeup elements								
Total uranium	4.88	3.09	2.62	2.84	3.99		0.74	0.56
^{235}U	0.49	0.60	0.52	0.57			0.69	0.04
^{233}U					0.47			0.40
Total plutonium						0.84		
^{239}Pu + ^{241}Pu						0.58		
Total thorium		2.49	3.5	4.11	7.14	4.59	11.24	13.5
Total HM	4.88	5.58	6.12	6.95	11.13	5.43	11.98	14.06
23R elements								
Total uranium				4.46	3.99		0.65	0.63
^{233}U				0.40	0.47		0.49	0.40
^{235}U				0.27			0.03	0.05
Total thorium				4.11	7.14		11.24	13.5
Total HM				8.57	11.13		11.89	14.13
25R elements								
Total uranium							1.24	
^{235}U							0.53	
Total thorium							11.24	
Total HM							12.48	

Table 6. Average fresh fuel element description at equilibrium

Characteristics	Once-through cycles			Recycle cycles				
	LEU OT1	MEU-Th annual OT2	MEU-Th semiannual OT3	MEU-^{235}U/Th 3 yr R1	MEU-^{233}U/Th 3 yr R2	Pu/Th 3 yr R3	HEU Old. ref. R4	HEU-233 R5
Chemical composition-fuel kernels								
Fissile								
Makeup elements	UC_2 (E-9%-U5)	UC_2 (E-20%-U5)	UC_2 (E-20%-U5)	UC_2 (E-20%-U5)	UC_2 (E-12%-U3)	$PuO_{1.8}$ (E-70%-PF)[c]	UC_2 (E-93%-U5)	UC_2 (E-78%-UF)[b]
23R elements				UC_2 (E-60%-U3)	UC_2 (E-12%-U3)		UCO(E-80%-UF)[b]	UC_2 (E-72%-UF)
25R elements							UCO(E-43%-U5)	
Fertile								
Makeup elements		ThO_2	ThO_2	$(Th/U)O_2$ (E-20%-U5)[a]	ThO_2	ThO_2	ThO_2	ThO_2
23R elements				$(Th,U)O_2$ (E-20%-U5)	ThO_2	ThO_2	ThO_2	ThO_2
25R elements								
Carbon ratios (per element)								
Makeup elements								
C/Th		850	600	500	300	430	180	150
C/U (or C/Pu)	450	700	820	667	550	2500	2730	3250
C/heavy metal	450	385	348	295	195	375	169	144
23R elements								
C/Th				500	300		180	150
C/U				460	550		3110	3250
C/heavy metal				240	195		170	143
25R elements								
C/Th							180	
C/U							1630	
C/heavy metal							162	
Shipping requirements								
Initial fuel elements	Unshielded	Unshielded	Unshielded	Unshielded	Shielded	Shielded	Unshielded	Shielded
Makeup elements	Unshielded	Unshielded	Unshielded	Unshielded	Shielded	Shielded	Shielded	Shielded
23R elements				Shielded			Shielded	
25R elements							Shielded	

[a]Th/U ratio = 3.75.
[b]UF = fissile uranium (^{235}U + ^{233}U).
[c]PF = fissile plutonium (^{239}Pu + ^{241}Pu).

Table 7. HTGR fuel cycles – equilibrium discharge mass data

Fuel cycle discharge	Once through – stowaway cycles			Recycle cases				
	LEU (10% fissile) (^{235}U)	MEU/Th (20% fissile) ^{235}U (annual reload)	MEU/Th (9% fissile) ^{235}U (semiannual reload)	MEU/Th recycle all uranium denature in situ ^{235}U(20% fissile); ^{233}U(12% fissile)	MEU-233/Th ^{233}U makeup from breeder ^{233}U (12% fissile)	Pu/Th Pu recycle	HEU/Th recycle all ^{233}U recycle ^{235}U once	HEU-233/Th high conversion
Discharge interval	Annual	Annual	Semi-annual	Annual	Annual	Annual	Annual	Annual
Cycle years	3	4	4	4	3	3	4	4
No. of fuel elements in core	5288	5288	5288	5288	5288	5288	5288	7548
FEs/discharge	1763	1322	661	1322	1763	1763	1322	1887
Reactor Power, MW(e)	1360 (1332 net)	1360 (1332 net)	1360 (1332 net)	1360 (1332 net)	1360 (1332 net)	1360 (1332 net)	1360 (1332 net)	1360 (1332 net)
Total HM, kg	7539	6474	3628	8770	18,583		15,126	
Th, kg	0	3040	2115	5050	12,587	7898	14,370	24,512
U-233, kg		93	59	145	458	70.5	409	698
U-235, kg	88	79	21	66	24.4	5.3	112	111
Total U, kg	7439	3345	1475	3647	6427	102	826	1208
Fissile Pu, kg	41.1	47	18	38	30	268	1.8	0.4
Total Pu, kg	100.3	90	38	73	60	504	7.7	4.4
Enriched fissile production, kg								
Pu	100	90	38	73	60	504	7.7	4.4
	(41% E)	(53% E)	(46.7% E)	(52% E)	(50% E)	(53% E)	(23.8% E)	(10% E)
U	>439	3128	1475	3647	6427	102	692	1208
	(1.18% E)	(5.51% E)	(5.5% E)	(5.8% E)	(7.51% E)	(74.1% E)	(70% E)	(67% E)

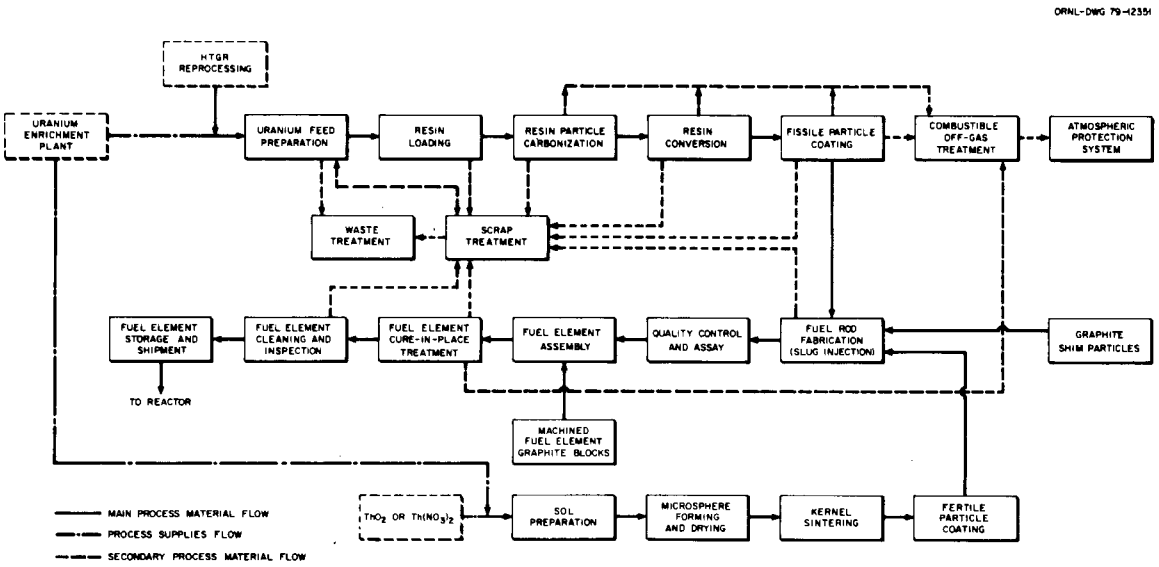

Fig. 13. Simplified HTGR fuel refabrication process flowsheet.

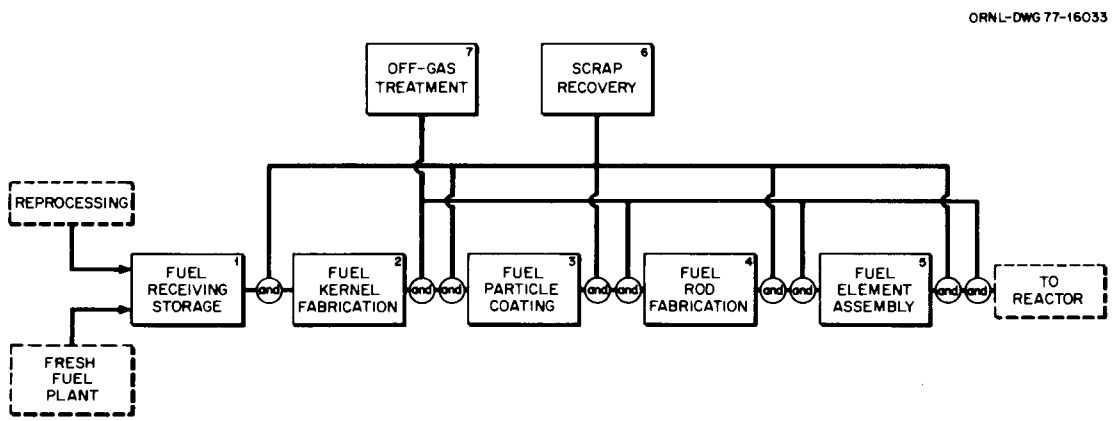

Fig. 14. Functional flow diagram for HTGR fuel element fabrication-refabrication.

this analysis, some uranium may be received as fully coated microspheres from a fabrication plant requiring no processing before the fuel rod fabrication step, or uranium may be received as medium-enriched UF_6 or as depleted UO_2. For the one case where plutonium is the fissile material, it would be received as PuO_2.

Thorium can be received in a variety of forms: as thorium nitrate solution from the reprocessing plant; as ThO_2 or $Th(NO_3)_4$ from commercial suppliers; or, in certain refabrication cases, as fully coated microspheres from a fabrication plant. These materials are stored in appropriate containers in a safeguarded manner and provide the feed to the fuel kernel fabrication processes.

3.4.2 Fuel kernel fabrication

The primary process variations in the fabrication and refabrication of the fuel for the various fuel cycles are concentrated in this functional area. Because of reactor physics considerations and fuel performance characteristics, different types of fissile particles are required for the various fuel cycles. The product of

fuel kernel fabrication is uniformly sized oxide particles or oxide containing some carbide. The two basic processes for making these kernels are the weak-acid resin process and the gel precipitation process. The first method involves the loading of uranium on presized ion exchange resin microspheres and their subsequent fluidized-bed conversion to a relatively low-density kernel containing UO_2 + UC_2 and some excess carbon. The gel precipitation process prepares solid-gel spherical particles directly from an aqueous solution of the metal nitrates to which a gelling agent has been added. The gel particles are sintered to form the high-density metal oxide or mixed metal oxide–carbide fissile kernel. This process is used for fissile kernels containing plutonium, denatured uranium, or blended uranium and thorium. Formation of the dried gel particle may be done at the conversion process in a reprocessing plant.

The fertile particles are also prepared by two processes, and the product is always a high-density microsphere of the metal oxide (ThO_2) or of the mixed metal oxide $(U,Th)O_2$. The $(U,Th)O_2$ particles contain 20% enrichment uranium; however, they are referred to as fertile particles because of the predominance of fertile thorium. Pure ThO_2 fertile kernels are typically prepared by the well-established sol-gel process in which a thorium nitrate solution is denitrated by steam to yield an aqueous sol containing suspended ThO_2. The resulting sol is transformed into microspheres by passing the sol through a vibrating nozzle into a drying solvent. These gel microspheres are sintered to produce the dense ThO_2 fertile kernels. When in situ denaturing of the ^{233}U bred from the thorium is required for the cycle, the solid gel microspheres are formed directly from a blend made by mixing a uranyl nitrate solution (20% enriched uranium) with a thorium nitrate solution to which a gelling agent has been added. Spheres are formed by passing the solution through a vibrating nozzle. The gellation is induced by the heated organic receiving bath. These gel microspheres are also washed and sintered to produce the dense $(U,Th)O_2$ fertile kernel microspheres.

All fuel kernels undergo a number of quality control inspections such as size, shape, and integrity. Reject material is sent to scrap recovery, and acceptable kernels are sent to fuel particle coating.

3.4.3 Fuel particle coating

The fuel kernels in both fabrication and refabrication are coated in fluidized-bed coaters. The appropriate hydrocarbon or silane gases are introduced into the fluidized gas stream and thermally decomposed to provide the appropriate coating material. Two types of coatings are applied. The fissile particles are provided with a TRISO coating which consists of an inner low-density carbon layer (buffer), a high-density isotropic carbon layer (inner low-temperature isotropic, ILTI), a high-density silicon carbide (SiC) layer, and an outermost layer of high-density carbon (outer low-temperature isotropic, OLTI). The fertile particles typically have only a two-layer BISO coating consisting of the low-density carbon buffer adjacent to the kernel covered with a relatively thick high-density isotropic carbon layer.

These coatings provide for fission product retention and so must be impermeable to the fission products. Thus, all coated particles experience a high level of quality control, and only acceptable coated particles are forwarded to the fuel rod fabrication process. Reject material is sent to scrap recovery.

3.4.4 Fuel rod fabrication

Individual fuel rods are made up by dispensing controlled quantities of fissile and fertile coated particles, together with inert graphite particles, used to permit loading variations to adjust for reactor zoning requirements, into a blender, and the homogeneous mixture is poured into a die to form a packed bed. The bed is intruded with a carbonaceous binder, and the resulting green fuel rod is ejected from the mold. Each fuel rod undergoes a series of quality control inspections, including dimensional verification, homogeneity

analysis, and a heavy-element assay. Acceptable rods are placed in protective racks for transfer to fuel element assembly, and reject rods are sent to scrap recovery.

3.4.5 Fuel element assembly

In fuel element assembly, the green fuel rods, together with appropriate burnable poison disks, are assembled into fuel columns and inserted into machined graphite blocks. Each fuel column is capped by a graphite plug. The entire assembly is then transferred to a high-temperature furnace and heated in a controlled time and temperature treatment cycle to remove the volatile components of the green fuel rod binder and convert the residue to carbon. The resulting integral fuel element is cleaned, inspected, and packaged for shipment to the reactor.

3.4.6 Off-gas treatment

Each of the major process steps, including scrap recovery, produces gaseous waste products which must be treated before release to the atmosphere. All gaseous streams receive high-efficiency filtration to prevent release of even minor quantities of particulate material. Chemical operations in the fuel kernel fabrication processes are vented through systems to remove the nitrogen oxides and, in the case of refabrication involving ^{233}U and recycle thorium, to trap the short-lived ^{220}Rn and other daughter products from the ^{232}U decay process. Special scrubbers are used in the off-gas streams from the fuel particle coating and fuel element assembly furnaces to remove the volatile components of the green fuel rod binder and convert the residue to carbon. The resulting integral fuel element is cleaned, inspected, and packaged for shipment to the reactor.

3.4.7 Scrap recovery

As indicated in the descriptions of the various fabrication processes, the high-quality control standards result in the rejection of significant quantities of off-specification material. Scrap recovery is, therefore, an integral part of both a fabrication and a refabrication process. The scrap recovery processes are subdivided to meet the requirements imposed by the form of the source material and include: controlled burning to remove the carbon, crushing for silicon carbide–coated particles, separation of fissile from fertile particles, dissolution of burner ash, and one stage of solvent extraction to remove any contaminants picked up in the processes from the recovered heavy-metal nitrate solutions before they are recycled. With scrap recovery, total fuel material losses in refabrication are anticipated to be less than 1%.

4. COST ESTIMATION PROCEDURES

The base case for metal-clad fuels was the study of a pressurized water reactor reported in ORNL/TM-6501.[1] That report provided a somewhat detailed analysis of the facility, equipment, and operating requirements for the fabrication of fuel for current-design PWRs. Capital and operating costs were estimated for a plant with a 2-MT HM/d capacity.

To relate other metal-clad fuels (including other PWR cases) to this base case, a direct comparison was made of fuel fabrication functions required for each fuel type. This was a systematic procedure in which the functional flowsheets for fabrication of the various fuels were compared with the reference PWR fuel fabrication flowsheet, and appropriate additions or deletions were made. Note that the determination of requirements for each case is based on fabrication of specific fuel assemblies previously described in this

report. Capacity requirements for the various functions were assessed based on the designs of the fuel assemblies (number of fuel rods in each assembly, number of pellets in a fuel rod, etc.) and used in the following cost categories:

1. capital cost of facility,
2. capital cost of equipment,
3. annual material costs,
4. annual operating costs.

The procedure for relating estimates of any fuel type to the reference PWR case was similar for each capital-cost category. As an example, consider the facility capital-cost category. In ORNL/TM-6501, estimates were made of area requirements for the various process functions, and the costs associated with these portions of the facility were determined by multiplying the area by a unit area cost of $\$200/ft^2$ (except the quality-control laboratories, for which a unit cost of $\$400/ft^2$ was used). The area requirements for other metal-clad fuels were estimated by comparing the area requirements for specific fuel fabrication functions with those of the reference case. This comparison was accomplished by the assignment of incremental multipliers to the areas. For example, if, in our estimation, approximately 30% more area than that required for pelleting PWR $(^{235}U,U)O_2$ fuel were required for one of the other candidate fuels, the incremental multiplier for the pelletization area would be 1.3. Impacts on area requirements of process complexity, atmosphere requirements, capacity requirements, remote operation, shielding, and maintenance were assessed to enable us to assign reasonable values to the incremental multipliers. After the estimates of functional area requirements were made, the total process area was determined by summation of individual process areas. Equations were developed to relate support areas to total process areas. Unit area costs were assigned to the process and support areas, and total costs were determined as the product of area times unit area cost. A summary of the factors used in the estimation of area costs and the equations that relate support areas to process areas are presented in Table 8. In those instances where similar functions did not exist in the base case (such as wire wrapping of FBR fuel rods), estimates of added space for these operations were made.

This procedure was repeated for the capital-cost (facility and equipment) categories for all metal-clad fuels. Consideration was given in all instances to effects due to such things as process complexity, criticality considerations, and personnel exposure limitations. We believe this approach provides consistency in the evaluation of the different fuels and also provides accuracy in the determination of relative costs of the different fuels. Hardware costs were based on independent estimates of costs by suppliers or buyers of the hardware. These hardware costs were independently estimated for each fuel type.

Since HTGR fuel elements are fabricated by distinctly different processes, it was necessary to establish a new reference for estimating the cost of fabricating these fuels. Fortunately, there were available specific estimates based on conceptual designs of fuel-cycle plants for HTGR fuels utilizing highly enriched uranium with self-generated recycle. General Atomic had developed a conceptual design and cost estimate with the assistance of the R. M. Parsons Company in 1975,[2] and this was reviewed, revised, and updated as part of the commercialization study done by the R. A. McCormick Company (RAMCO) for the DOE in 1977.[12] The reference case cost estimates were derived from this latter study.

To provide consistency and minimize variables in estimating costs, certain facility design assumptions were adopted; they are summarized in Table 9.

As may be noted by reference to Table 9, our assumption was that reference plant capacities were 2 MT HM/d. Because of the heavy-metal loading of different fuel assemblies and differences in fuel management

Table 8. Factors used for fuel fabrication cost estimates

Equations[a]	Unit area cost ($/ft²)					
	Contact		RO/CM		RO/RM	
	Oxides	Carbides or metals	Oxides	Carbides or metals	Oxides	Carbides or metals
$A_X = (f)(A_o)$ (contact facility)	200	300				
$A_X = (f)(A_o)(1.3)$ (RO/CM or RO/RM facility)			1000	1250	1200	1500
$A_Y = (0.5)(A_X)$	200	200	200	200	200	200
$A_{RM} = A_X$					1200	1200
$A_{CM/R} = (0.05)(A_{RM})$					400	400
$A_{CM} = (0.5)(A_X)$	200	200	400	400		
$A_{FS} = (0.2)(A_X + A_Y + A_{RM} + A_{CM})$	200	200	200	200	200	200
$A_{QC} = (f)(A_{QC_o})(1.3)$			1000	1000	1000	1000
$A_{QC} = (f)(A_{QC_o})$	400	400				
$A_{WH} = (1.3)(A_{WH_o})$			100	100	100	100
$A_{WH} = A_{WH_o}$	200	200				
$A_{CH} = (f)(A_{CH_o})$	200	200	200	200	200	200
$E_F = \Sigma E_o (f')$						

[a]Glossary:

A_o	Operations area in reference facility
A_X	Operations area in alternative facility
A_Y	Operations support area
A_{RM}	Remote maintenance area
$A_{CM/R}$	Contact maintenance area for remote facility
A_{CM}	Contact maintenance area for contact and remote operation and contact maintenance facilities
A_{FS}	Facility support area
A_{QC}	Quality control laboratories area
A_{CH}	Change room area
A_{WH}	Warehouse area
A_{Off}	Office area
f	Factor to relate facility area to reference facility area
f'	Factor to relate equipment cost to reference facility equipment cost
E_F	Facility equipment cost
o	Subscript refers to reference facility
RO/CM	Remote operation with contact maintenance
RO/RM	Remote operation with remote maintenance

schemes, the reference plants provide a wide range of electrical industry support. However, costs may be reduced to the basis of electrical power support by the use of scaling factors, which are subsequently presented in this report.

The following sections present tabular summaries of the cost estimates for the various fuels and reactor types.

4.1 Cost Estimates for PWR (or SSCR) Fuel Fabrication

The PWR fuels, and all metal-clad fuels, were based on a reference PWR case reported previously.[1] The basic processing and support operations were defined for this case and were extended to the other cases.

Table 9. Fuel fabrication and refabrication facility design assumptions

Fuel materials	U, Pu, and Th oxides, carbides, oxycarbides, and metals
Modes of operation	Contact (hooded); remote operation with contact maintenance (RO/CM); remote operation with remote maintenance (RO/RM)
Production capacities	520 MT HM/year (contact facilities);[a] 480 MT HM/year (RO/CM and RO/RM facilities)[a]
Design capacity[b]	243 MT HM/year per fuel rod production line; 730 MT HM/year fuel assembly operations
Plant efficiencies	72% (contact facilities); 67% (RO/CM and RO/RM facilities)
Plant operating factors, % of full-production capacity	First year 33 Second year 67 Third and subsequent years 100
Operating philosophy	24 hr/day, 7 days/week. Certain activities may be curtailed or reduced on some shifts, but operating personnel will be at plants 24 hr/day.
Principle of operation	Toll processing. Sufficient feed material provided by customer to fabricate fuel with a specified yield. All materials other than heavy-metal feed are provided by fuel fabricator.
Feed materials (from reprocessing as calcined powder or microspheres)	Oxide fuels – heavy-metal oxides; carbide fuels – heavy-metal oxides; oxycarbide fuels – heavy-metal oxides; metal fuels – heavy-metal fluorides
Hardware production	Basic hardware items or stock materials are purchased. Incorporation of items into finished units is performed at fuel fabrication facility. Axial blanket material for FBRs is purchased as sintered pellets; cost of axial blanket material is processing cost only, i.e., customer provides all feed material.
Waste treatment	All wastes are prepared and packaged for disposal as immobile solids. Transportation and ultimate disposal of wastes are not provided.
Scrap recycle	All clean and dirty scrap is recycled within the fuel fabrication plant.
Feed shipments	Feed materials are provided by customer, FOB the fabrication plant in customer-owned containers.
Product shipments	Finished fuel assemblies are packaged in plant operator-owned shipping containers or casks. Transportation of fuel assemblies to reactor sites is the responsibility of the customer.

[a]Capacities given in terms of total heavy metal as finished fuel assemblies. For FBR fuels, this includes core plus axial blanket material.

[b]Design capacity means the capability of the plant in MT HM/year when it operates as described under operating philosophy with each shift operating at 100% efficiency. Production capacities are determined by multiplying design capacity by efficiencies. Efficiencies account for unscheduled (maintenance problems, etc.) and scheduled (vacation, holidays, etc.) operating interruptions.

The detailed review of this reference case was the basis for definitions of processing and support functions presented in Table 8. We note that for the reference PWR case – $(^{235}U,U)O_2$ fuel – and for the $(^{235}U,Th)O_2$-fueled PWR, the equations presented in Table 6 were not used. That is, for these two cases an analysis of all processing and support functions was made to establish requirements and costs. Also, for the contact-operated and -maintained HWR cases and the $(^{235}U,Th)O_2$-ThO_2 LMFBR core case, fuel maintenance space requirements were based on estimates rather than the formula in Table 8. For all other

metal-clad cases, the equations presented in Table 8 were used. For the $(^{235}U,U)O_2$ and $(^{235}U,Th)O_2$ PWR cases, additions of 30% (for engineering and contingencies) were made to the estimated facility costs. This addition was not made for the other cases, because these costs were reflected in the incremental multipliers assigned and in the unit area costs.

4.1.1 Facility capital costs

As stated earlier, facility costs were determined by obtaining estimates of processing area requirements and then assigning unit area costs, depending on the nature of the process functions. The unit area costs are presented in Table 8 for the various processing modes – contact, remote operation with contact maintenance, and remote operation with remote maintenance. As may be observed from the entries in Table 8, the complexity of the processing mode and the requirements for special processing atmospheres (for carbide and metal fuels) reflect directly on the unit area costs.

In Table A-1* we have summarized our estimates of the area required for the various process functions for PWR fuel fabrication. Table A-2 presents the conversion of these area estimates to costs, and also includes the costs of the various support areas determined by application of the equations of Table 8.

4.1.2 Equipment capital costs

Equipment cost estimates for PWR fuel fabrication facilities are presented in Table A-3. For all cases except the $(^{235}U,U)O_2$ and $(^{235}U,Th)O_2$ fuels, the technique for determining equipment costs was the same – the process functions were compared with the reference case, incremental multipliers were assigned based on increased or decreased equipment requirements, and equipment costs were calculated for each process area.

4.1.3 Operating costs

Operating cost categories generally include labor and supervision, overhead, general and administrative, materials, and utilities. Because of the appreciable impact of hardware and material costs on overall fuel fabrication costs, we separated the costs of materials from operating costs and created an operating cost category and a materials cost category.

The organizational structure developed for the reference PWR case was considered appropriate for all facilities. In order to determine personnel costs, we made an assessment of increased, or decreased, personnel requirements for all plants when compared with the reference plant. This assessment was made for each organizational unit. The incremental cost increases, or decreases, were determined, and total personnel costs were determined by adding these incremental costs to the reference case. For clarification, the organization chart developed for the reference case is presented in Fig. 15. This chart identifies the various organizational units that we considered necessary to operate a fuel fabrication or refabrication facility.

The costs of utilities were estimated from requirements dictated by the number of personnel, the equipment used in the various fabrication operations, and the amount of material produced.

Overhead and general and administrative costs include management personnel costs, travel, telephone, office supplies, postage, professional and legal fees, and miscellaneous fees, assessments, contributions, memberships, and subscriptions. Most of this cost is directly related to the number of personnel required to operate the facility. Operating cost summaries for the PWR fuel cycles are presented in Table A-4.

---

*Tables A-1 to A-25 are presented in Appendix A.

ORNL-DWG 78-10930

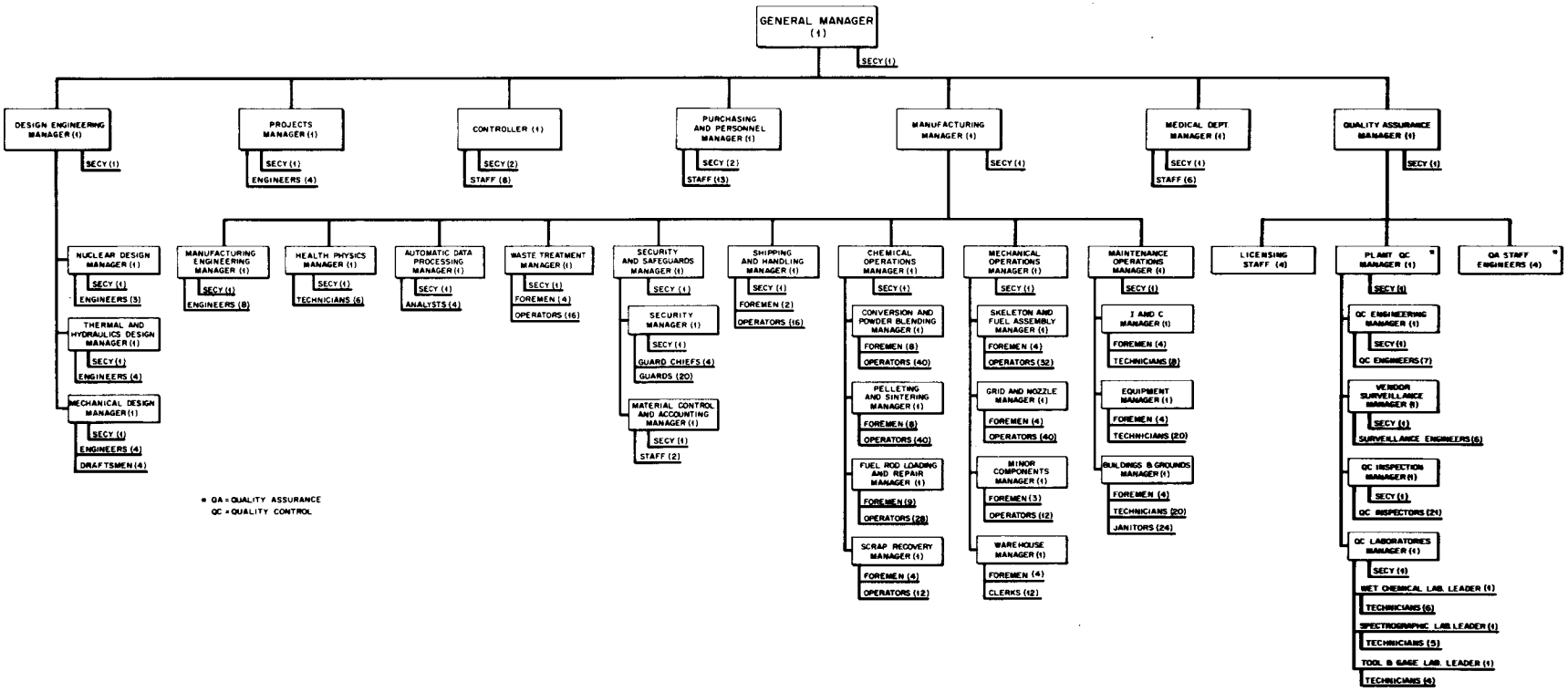

Fig. 15. Organization chart for a 2-MT HM/d PWR fuel fabrication plant.

4.1.4 Materials

The materials cost category includes direct materials – those materials actually used in processing the fuel, indirect materials such as waste-processing chemicals, supplies such as containers, and fuel assembly hardware. Of these, fuel assembly hardware makes the most significant impact on cost. Hardware costs and material costs are based on estimates by suppliers or on information contained in trade journals. Materials costs for PWR fuels are summarized in Table A-5.

4.2 Cost Estimates for HWR Fuel Fabrication

The basic operations for fabrication of HWR fuel are similar to those used for PWR fuel fabrication. The HWR fuel assembly design is somewhat simpler than that for the PWR, and this is reflected in lower costs of the fuel assembly fabrication operations.

4.2.1 Facility capital costs

The space requirements for the functional areas of the HWR fuel fabrication plant are presented in Table A-6, and the capital costs of the facility are summarized in Table A-7. These areas and costs were determined by the same technique used for the PWR fuel fabrication facilities.

4.2.2 Equipment capital costs

The capital costs for HWR fuel fabrication equipment are summarized in Table A-8.

4.2.3 Operating costs

The estimated costs of operating HWR fuel fabrication plants are presented in Table A-9.

4.2.4 Materials

Materials requirements, except for hardware, are about the same for HWR fuel fabrication as for PWR fuel fabrication. Due to the simplicity of the CANDU fuel assembly design, hardware does not represent as significant a contribution to material costs as it did for PWR fuels. Table A-10 presents the material cost estimates for HWR fuel fabrication.

4.3 Cost Estimates for LMFBR Fuel Fabrication

The cost estimation procedure for LMFBR fuel was the same as that described for the other metal-clad fuels. Some complications are introduced due to the increased complexity of the fuel assembly design, problems associated with handling the carbide and metal fuels, and the difficulty of handling metallic sodium. The impact of these complications on fuel fabrication costs is reflected by additional operations and increased unit area costs.

4.3.1 Facility capital costs

Area requirements and facility capital costs for LMFBR oxide fuel fabrication are presented in Tables A-11 and A-12 respectively. Similar information is provided for LMFBR carbide fuels by Tables A-16 and A-17, and for LMFBR metal fuels by Tables A-21 and A-22.

4.3.2 Equipment capital costs

Capital cost estimates for equipment for LMFBR oxide, carbide, and metal fuels are presented in Tables A-13, A-18, and A-23 respectively.

4.3.3 Operating costs

Operating cost summaries for LMFBR oxide, carbide, and metal fuels are shown in Tables A-14, A-19, and A-24 respectively.

4.3.4 Materials

Tables A-15, A-20, and A-25 provide material cost information for LMFBR oxide, carbide, and metal fuels respectively.

4.4 Cost Estimates for HTGR Fuel Fabrication

As stated earlier, the estimated costs for fabrication of HTGR fuels are primarily based on the commercialization study performed by RAMCO for the DOE in 1977. The following sections describe the techniques used to extend this information to the cases of interest.

4.4.1 Capital cost estimates

The reference case capital cost estimates were derived by making only moderate modifications to the data in the commercialization study. The modifications included a change in estimates to 1978 dollars, minor adjustments to the reference plant capacities defined for this study (see Table 7), and adjustments to define the refabrication plant as a stand-alone facility. This last adjustment was necessary because the commercialization study assumed the calculation of a reprocessing and refabrication plant, while this study assumed separate plants as with the metal-clad fuels discussed in Sect. 3.1.

The resulting reference case capital costs thus derived are summarized as follows in 1978 dollars:

Fabrication plant	*(520 MT HM/yr)*
Facility	51 million
Equipment	166 million
Refabrication plant	*(480 MT HM/yr)*
Facility	304 million
Equipment	498 million

The refabrication plant cost estimates include stand-alone additions of $14 million in the facility portion and $35 million in the equipment portion. Because of the conceptual design limitations for these facilities, a contingency of 35% was used. This provides consistent estimates with the metal-clad fuels estimates.

The alternative fuel-cycle capital cost estimates were derived, as with the metal-clad fuels, by evaluating each fuel element design, defining the process flowsheets, and evaluating the capacity requirements for the process functional areas. It should be noted that the HTGR fabrication costs are very sensitive to fuel element design characteristics. Consequently, a specific procedure was developed to scale the capital cost estimates from the reference design to the alternative cases.

First, an evaluation was made of the facility costs in terms of capacity requirements. It was found that the facility space was directly proportional to the number of fuel elements produced to achieve the required annual heavy-metal throughput. Thus the facility capacity ratio is readily defined:

$$\frac{x_u}{x_0} = \text{capacity ratio,}$$

where

x_u = fuel elements per year produced in the plant being evaluated,
x_0 = fuel elements per year produced in the reference plant.

On the other hand, the equipment capacity ratios are more complex and are derived differently for fabrication plants and refabrication plants. The complexity derives in part from the fact that the total heavy-metal fuel throughput is made up of two types of particles.

The fissile particles contain ^{235}U, ^{233}U, and/or Pu. Fissile particle processing is more complicated than the fertile particle processing, in part because the coating includes an intermediate layer of silicon carbide. Equipment capacities are smaller because of criticality restraints. Batch-type operations are required and batch sizes are small. This batch type of operation requires considerable inspection equipment, as well as blending and storage equipment to create practical production lot sizes.

The fertile particles in most cases contain only thoria. The coating is simpler and can be applied much more rapidly. There are no criticality restraints, so batch sizes are roughly three times as large as fissile particles in the coating furnaces. Other processing is adaptable to continuous rather than batch operation. In one of the cases included in this study (MEU/Th, designated R1) the fertile particles are a blend of uranium and thorium with fissile ^{235}U in the uranium. This necessitates an adjustment in the fissile and fertile distributions in the cost estimation procedure.

A second effect of the use of two particles defines a difference between fabrication and refabrication plants. Both fissile and fertile coated particles are produced in a fabrication plant, while only fissile particles are prepared and coated in a refabrication plant.

Once satisfactory coated fissile and fertile products are available, the equipment requirements for fabricating fuel rods and incorporating them into finished fuel elements are directly proportional to the number of fuel elements produced per year.

To assess the capacity ratios of equipment requirements for alternate fuel cycles, it was necessary to define the fraction of the equipment associated with particle preparation. This was done with a function-by-function cost analysis of the data available for the reference case. Analysis showed that approximately 20% of the total equipment cost was associated with coated particle preparation. With this information the following formulations were used to define equipment capacity ratios.

1. For fabrication plants

$$\frac{x_u}{x_0} = \frac{(\text{kgU} + \text{kgTh}/3)_u}{(\text{kgU} + \text{kgTh}/3)_0} \times 0.2 + \frac{(\text{fuel elements per year})_u}{(\text{fuel elements per year})_0} \times 0.8$$

2. For refabrication plants

$$\frac{x_u}{x_0} = \frac{(\text{kg of heavy metal in fissile})_u}{(\text{kg of heavy metal in fissile})_0} \times 0.2 + \frac{(\text{fuel elements per year})_u}{(\text{fuel elements per year})_0} \times 0.8$$

In both sets, x_0 is the capacity of the reference plant of the type being estimated, and x_u is the capacity of the alternative fuel-cycle plant. In the equations above, the capacities for the coated particle preparation equipment are about three times greater for thorium because of the lack of criticality restrictions. For refabrication, only fissile particles are fabricated remotely.

Having established capacity ratios for the two portions of the capital cost estimate increments (facility and equipment), it was necessary to determine the effect of the changes in capacity on cost estimates. This was done by application of plant capacity scaling factors. These capacity scaling factors apply to metal-clad fuels as well as to HTGR fuels, and their derivations are discussed in Sect. 4.3.

Utilizing these formulas and the fuel element descriptions, the capital cost estimates for each case in the study were calculated. These are given in Table B-1.*

4.4.2 Operating costs

As with the metal-clad fuels estimates, two operating cost increment categories were defined. One is called operating costs, which include labor, supervision, overhead, general and administrative, utilities, and miscellaneous supplies. The second category, materials costs, is predominately materials included in the finished assemblies (hardware costs), but also includes expendable materials such as those used in the process, chemicals for scrap and waste treatment, containers, etc.

The operating costs for the reference plants were derived by analysis of an organization chart, similar to the example given in Fig. 15 for the metal-clad fuels plant, to define the manpower requirements. This was supplemented with estimates of the utility and miscellaneous materials costs. Derivation of operating costs for the alternative fuels was made by scaling. Here we used the equipment capacity ratios and a scaling factor of 0.8 to determine operating costs for an alternative plant. The details of the operating costs are given in Table B-2.

The materials costs were derived from current cost experience, with rational modifications to increased production demands. These costs are directly proportional to the number of fuel elements produced for a given case. Details are presented in Table B-3.

As with the metal-clad fuels, the plant operational mode was assumed to be that of the toll processor. Thus, there are no costs included for the fissile uranium and plutonium or the fertile thorium materials. In Table B-3, for example, the ThO_2 fertile particles are considered a hardware item, but only the costs of processing and quality assurance are included. The "uranium penalty" in the fertile particles for the MEU/Th case is included to account for the added processing controls, materials accountability, and scrap and waste treatment required for this material.

4.5 Scaling Factors for Fabrication and Refabrication Plants

As stated earlier in this report, the unit costs of fuel fabrication and refabrication are derived from these cost estimates, and the unit costs are submitted to the NASAP and INFCE programs. These programs require unit costs for plants of different sizes. Since a standard plant size (2 MT HM/d) was used in this work, it was necessary to develop scaling factors to permit the determination of unit costs for plants differing only in size.

A standard equation for estimating costs as a function of capacity is

$$C_u = C_0(X_u/X_0)^Y ,$$

*Tables B-1 to B-3 are presented in Appendix B.

where

C_u = cost of a plant of any size in a given cost category,
C_0 = cost of the reference plant in a given cost category,
X_u = capacity of any plant,
X_0 = capacity of the reference plant,
Y = scaling factor exponent for the given cost category.

The cost estimates presented here were divided into four cost categories – capital cost of facility, capital cost of equipment, annual operating costs, and annual material costs. Each of these cost categories was examined to determine the appropriate value of the exponent Y. The values of Y that were determined to be appropriate were:

Cost category	Y
Capital cost of facility	0.6 (contact plants)
	0.8 (remote plants)
Capital cost of equipment	0.7
Material cost	1.0
Operating cost	0.8

Contact fabrication facilities are fairly similar to standard processing facilities with respect to added space requirements to allow increased production. Thus the standard "six-tenths factor"[13] was considered appropriate for this category. For remote fabrication facilities, we assumed a capacity limit of 1 MT/d for each process line due to space and shielding requirements. The result of this consideration was that in order to double production, the number of process lines had to be doubled. Space savings were realized in boundary areas and in some auxiliary areas, and the resulting area increase amounted to about 75% for a plant of two times the reference plant capacity. This 75% area increase amounts to an exponent Y value of 0.8. Our assumption was that unit building material costs were constant and that the exponent 0.8 is appropriate for facility capital cost as well as area.

Variations in equipment requirements with plant capacity are virtually independent of the mode of operation (contact or remote). Thus the same capacity scaling factor exponent (0.7) was used for both contact and remote-operation plants. Typical exponents for equipment cost as a function of capacity were obtained from the *Chemical Engineers' Handbook.*[14] These exponents were used for guidance in establishing the value of our exponent. As evidenced from the information contained in the handbook, exponents vary considerably with type of equipment, but by selecting exponents for equipment of reasonable similarity to that in the fabrication and refabrication plants, and by weighting individual exponents, we obtained a value of about 0.7 for the exponent applicable to our total equipment.

Material (direct materials, supplies, and hardware) requirements are directly proportional to the number of fuel assemblies fabricated. Since the fabrication plants considered in ORNL/TM-6522[4] were of sufficient size that cost savings due to quantity buying were not realized, an exponent of 1.0 was considered appropriate for the material cost category. We do recognize that indirect materials and supplies requirements such as those related to number of employees are not directly proportional to plant capacity. However, these indirect materials and supplies represent a very small fraction of total materials requirements and do not have an appreciable impact on the exponent value.

Operating cost variations are principally influenced by personnel costs. Savings in personnel costs with increased capacity are realized by a reduction in the percentage of personnel devoted to overhead duties. Our analysis of PWR fuel fabrication plants suggests that a doubling of the capacity of a plant would result in an increase of about 70% in personnel costs. When personnel cost increases were combined with utility and overhead (other than personnel) cost increases, total operating costs increased by about 75% with a doubling of capacity. An exponent of 0.8 provides this rate of increase.

5. SUMMARY AND CONCLUSIONS

In the preceding sections we have described in some detail the methodology used in estimating basic fuel fabrication cost increments. In essence the methodology required the use of a well-defined reference plant cost estimate as the basis. The alternative fuel cases are derived by a systematic function-by-function review with assignment of appropriate incremental multipliers to each function. The incremental multipliers are based on changes in fuel element design, process complexity, working environment requirements, material characteristics, and functional capacity requirements.

Capital (facility and equipment), operating, and material costs for all fuels considered in this study are presented in Table 10. These are the basic costs used as input for the economic analyses to determine prices for each of the fuels as presented in ORNL/TM-6522.[4] The unit price analysis formula used is given in Table 11. The basic cost estimates were used in this formula to provide values of C_D (capital expenditures for facility and equipment), O (annual operation cost), and M (annual material cost). In the formulation, O includes interest on working capital, where working capital requirements are equal to 90 days of receivables on all operating and materials costs. The working capital charges are not included in any of the estimates presented in this report.

The objectives of this study were to provide a consistent set of cost estimates for fabrication of reactor fuels for a large number of possible alternatives and to provide reasonably accurate price estimates (costs to the reactor), for each of the fuel cycles addressed, for use in a broader economic analysis of alternative reactor fuel cycles.

The methodology discussed in this report is an extension of that used in an earlier cost estimation study, which was reviewed by several industrial and government organizations. As a result of that review, the basic methodology was retained, but the level of detail was increased. This was done to increase both the consistency and the accuracy of the estimates. In terms of consistency, the results presented in ORNL/TM-6522 have been extensively reviewed by the similar groups, and general concurrence on the cost estimates and the cost differentials has been obtained. Throughout the study, emphasis was placed on identifying and quantifying cost differences; as a result, the relative costs (or cost differences) are considered to be significantly more valid than the individual cost estimates.

In terms of the accuracy of the costs, it must be recognized that, at best, they were based on concepts for the different fuels; consequently, a high contingency of 30 to 35% was included in all of the capital-cost estimates. More precise cost estimates can only be obtained with additional detailed design work on each process. However, where it was possible, the estimates and resulting prices were compared with existing plants or estimates made by others. These comparisons substantiate the estimates and provide reasonable assurance that the unit cost estimates are accurate to within ±25%. Thus they do provide a reasonable input to broad fuel-cycle economic analyses.

The methodology provides a means of producing consistent and reasonably accurate basic cost estimates for a wide range of fuel fabrication processes. When these estimated costs are subjected to uniform economic analyses, the resulting fuel fabrication prices are also consistent and reasonably accurate.

Table 10. Summary of estimated costs for fabrication and refabrication of LWR, SSCR, HWR, LMFBR, and HTGR fuels

Fuel cycle[a]	Estimated costs (10^6)			
	Facility	Equipment	Annual hardware and material	Annual operating[b]
LWR/SSCR				
$(^{235}U,U)O_2$	32.0	34.2	23.0	13.4
$(^{235}U,Th)O_2$	34.8	46.5	24.5	13.9
$(^{233}U,U)O_2$	470.5	249.2	27.2	24.4
$(^{233}U,Th)O_2$	509.8	265.7	27.4	24.9
$(Pu,U)O_2$	208.4	208.5	27.6	24.0
$(Pu,U)O_2$ *	512.7	267.7	27.8	24.9
$(Pu,Th)O_2$	224.8	211.3	28.2	24.1
$(Pu,Th)O_2$ *	519.4	265.7	28.6	24.9
HWR				
UO_2 – natural	17.9	27.4	10.8	9.5
$(^{235}U,U)O_2$	21.3	33.2	11.2	11.0
$(^{235}U,Th)O_2$	22.6	44.2	12.5	11.4
$(^{233}U,U)O_2$	414.5	227.0	16.3	17.7
$(^{233}U,Th)O_2$	453.0	247.3	17.7	17.8
$(Pu,U)O_2$	194.5	195.3	16.7	17.4
$(Pu,U)O_2$ *	454.1	246.3	16.8	17.8
$(Pu,Th)O_2$	207.0	196.3	18.1	17.4
$(Pu,Th)O_2$ *	463.5	246.3	18.5	17.8
LMFBR – oxides				
$(^{235}U,Th)O_2/ThO_2$	50.3	81.5	81.8	15.7
$(^{233}U,Th)O_2/ThO_2$	1000.8	291.5	82.7	26.4
$(Pu,U)O_2/UO_2$	357.5	231.9	76.8	25.1
$(Pu,U)O_2/UO_2$	938.3	274.4	76.8	26.6
$(Pu,Th)O_2/ThO_2$	357.5	231.9	82.7	25.7
$(Pu,Th)O_2/ThO_2$ *	1019.5	309.7	82.7	26.9
UO_2 (RB)[c]	24.3	33.6	33.1	13.4
ThO_2 (RB)	25.9	36.9	36.3	13.4
ThO_2 (RB)*	478.3	333.8	33.5	26.4
LMFBR – carbides				
$(^{233}U,Th)C/ThC$	948.7	294.4	70.4	27.1
(Pu,U)C/UC	361.6	245.2	63.2	25.5
(Pu,U)C/UC*	915.5	290.2	63.2	26.8
(Pu,Th)C/ThC	368.4	248.9	70.4	25.8
(Pu,Th)C/ThC	948.7	294.9	70.4	27.1
UC (RB)	35.3	56.5	30.6	13.4
ThC (RB)	36.5	61.1	38.0	13.4
ThC (RB)*	783.0	251.7	35.1	27.1
LMFBR – metals				
^{233}U,Th/Th	934.5	259.7	71.1	28.8
Pu,U,Zr/U	339.6	202.8	71.3	27.0
Pu,U,Zr/U*	841.5	235.7	71.3	28.4
Pu,Th/Th	379.2	219.6	71.1	27.7
Pu,Th/Th*	934.5	259.7	71.1	28.8
U (RB)	33.9	31.7	28.2	13.4
Th (RB)	38.2	37.8	38.1	13.4
Th (RB)*	763.3	212.7	35.2	28.8

Table 10 (continued)

Fuel cycle[a]	Estimated costs (10^6)			
	Facility	Equipment	Annual hardware and material	Annual operating[b]
HTGR				
OT-1 (LEU-stowaway)	87.0	266.0	184.0	22.5
OT-2 (MEU-stowaway)	81.0	260.0	168.0	20.2
OT-3 (MEU-stowaway)	76.0	244.0	157.0	18.9
R-1 (^{235}MEU/Th)	71.0	227.0	146.0	18.9
R-1 (MEU/Th)*	395.0	809.0	113.0	39.7
R-2 (^{233}MEU/Th)*	320.0	807.0	88.0	39.7
R-3 (Pu/Th)*	569.0	807.0	172.0	35.7
R-4 (HEU/Th)	51.0	166.0	94.0	13.4
R-4 (HEU/Th)*	304.0	498.0	89.0	23.6
R-5 (^{233}HEU/Th)*	265.0	450.0	78.4	23.0

[a]Fuel descriptions indicate fissile material, fertile material, and axial blanket (if applicable) material. All ^{235}U fuels are fabricated in contact-operated and -maintained facilities, ^{233}U fuels are fabricated in remotely operated and maintained facilities, and Pu fuels are fabricated in remotely operated and either contact or remotely maintained facilities. Recycled Th is fabricated in remotely operated and maintained facilities. The asterisks indicate the remotely operated and maintained Pu or Th facilities.

[b]Annual operating costs presented are exclusive of interest on working capital. Operating costs presented in ORNL/TM-6522 include this charge.

[c]RB refers to radial blanket material.

Table 11. Unit price analysis formula

$$\$/\text{kg} = [(C_D + C_O + C_C)R + O + M + E_R + D]/T\,,$$

where[a]

C_D = facility plus equipment costs, $C_F + C_E$

C_F = facility cost (excluding process equipment)

C_E = equipment cost

C_O = owner's cost during construction

C_C = charge on direct capital during construction, $I_O C_O + I_D C_D$

I_D = fractional charge on design and construction cost during construction

I_O = fractional charge on owner's cost during construction

R = annual fixed charge rate on capital, fraction per year

O = annual operating cost

M = annual hardware and expendable material cost

A_R = annual maintenance and replacement rate on equipment, fraction per year

E_R = annual maintenance and replacement cost, $A_R C_E$

D = annual payment to establish fund for decommissioning

T = annual throughput achieved, Gg/year, XF

X = design capacity of plant, Gg/year

F = average fraction of design capacity achieved

[a]All costs in millions of dollars.

REFERENCES

1. R. R. Judkins and A. R. Olsen, *Estimation of Costs for Fabrication of Pressurized-Water Reactor Fuel,* ORNL/TM-6501 (January 1979).

2. *Conceptual Design Summary and Design Qualifications for HTGR Target Recycle Plant,* General Atomic Company, GA-A13365 (Apr. 30, 1975).

3. A. R. Olsen, *Thorium Fuel Cycle Studies – Fuel Fabrication Process and Cost Estimation,* ORNL/TM-5961 (in press).

4. A. R. Olsen, R. R. Judkins, W. L. Carter, and J. G. Delene, *Fuel Cycle Cost Studies – Fabrication, Reprocessing, and Refabrication of LWR, SSCR, HWR, LMFBR, and HTGR Fuels,* ORNL/TM-6522 (March 1979).

5. *RESAR-3S. Reference Safety Analysis Report, Volume 2,* Docket STN 50545-2, Westinghouse Electric Corporation, Pittsburgh (July 1975).

6. *System 80 – Preliminary Safety Analysis Report – Combustion Engineering Standard Safety Analysis Report, Volume 4, Amendment 3,* Docket STN 50470, Combustion Engineering, Inc., Windsor, Connecticut (June 3, 1974).

7. *Data Base for a CANDU-PHWR Operating on a Once-Through Natural Uranium Cycle,* INFCE/WG.8/CAN/DOC, draft submission to INFCE working group 8: Advanced Fuel Cycle and Reactor Concepts (October 1978).

8. Y. A. Chang, Argonne National Laboratory, personal communication to J. M. Cleveland, Oak Ridge National Laboratory (April–May 1978).

9. A. J. Neylan, General Atomic Company, personal communication to K. O. Laughon, Department of Energy (Mar. 3, 1978); R. K. Lane, General Atomic Company, personal communication to A. R. Olsen, Oak Ridge National Laboratory (July 17, 1978).

10. *High-Temperature Gas-Cooled Reactors – Once-Through Cycles,* INFCE working group 8: Advanced Fuel Cycle and Reactor Concepts; subgroup A: Once-Through Cycles, draft report (July 1978).

11. *High-Temperature Gas-Cooled Reactors – Operating on Fuel Recycle,* INFCE working group 8: Advanced Fuel Cycle and Reactor Concepts: subgroup B: Alternate Recycle Cases, draft report (July 1978).

12. *Gas-Cooled Reactor Commercialization Study – Interim Report,* R. A. McCormick Company, prepared for Department of Energy (Oct. 31, 1977).

13. R. Williams, *Chem. Eng.* **S4(12)**, 124 (1947).

14. R. H. Perry, C. H. Chilton, and S. D. Kirkpatrick (eds.), *Chemical Engineers' Handbook,* 4th ed., McGraw-Hill, New York, 1963.

Appendix A

SUMMARY OF CAPITAL, OPERATING, AND MATERIALS COSTS ESTIMATES FOR METAL-CLAD FUELS

Note:

In the following tables these footnotes apply:

[a]Remote operation and contact maintenance.
[b]Remote operation and remote maintenance.
[c]RB – radial blanket.

Table A-1. Space Requirements for Process Functions in PWR Fuel Fabrication and Refabrication Plants

Functional Area	Space Requirements for Fuel Type, m^2 (ft^2)							
	$(^{235}U,U)O_2$	$(^{235}U,Th)O_2$	$(^{233}U,U)O_2$	$(^{233}U,Th)O_2$	$(Pu,U)O_2$[a]	$(Pu,U)O_2$[b]	$(Pu,Th)O_2$[a]	$(Pu,Th)O_2$[b]
UF_6 Receipt and Conversion	511 (5,500)	93 (1,000)						
Powder Receipt and Storage		158 (1,700)	411 (4,420)	411 (4,420)	411 (4,420)	411 (4,420)	411 (4,420)	411 (4,420)
Powder Preparation	437 (4,700)	497 (5,350)	628 (6,760)	628 (6,760)	628 (6,760)	628 (6,760)	628 (6,760)	628 (6,760)
Pelletization	177 (1,900)	232 (2,500)	302 (3,250)	302 (3,250)	302 (3,250)	302 (3,250)	302 (3,250)	302 (3,250)
Pellet Sintering, Grinding, and Inspection	543 (5,850)	776 (8,350)	1,479 (15,925)	1,649 (17,745)	1,714 (18,445)	1,750 (18,835)	1,950 (20,995)	1,987 (21,385)
Fuel Rod Loading and Welding	258 (2,780)	322 (3,470)	566 (6,095)	566 (6,095)	524 (5,645)	566 (6,095)	524 (5,645)	566 (6,095)
Fuel Rod Inspection and Storage	650 (7,000)	697 (7,500)	2,899 (31,200)	2,899 (31,200)	1,570 (16,900)	2,899 (31,200)	1,751 (18,850)	2,899 (31,200)
Fuel Assembly Fabrication	279 (3,000)	348 (3,750)	1,691 (18,200)	1,691 (18,200)	1,208 (13,000)	1,691 (18,200)	1,208 (13,000)	1,691 (18,200)
Fuel Assembly Inspection	316 (3,400)	347 (3,740)	1,232 (13,265)	1,232 (13,265)	862 (9,280)	1,232 (13,265)	945 (10,170)	1,232 (13,265)
Fuel Assembly Packaging, Storage, and Shipping	372 (4,000)	557 (6,000)	4,831 (52,000)	4,831 (52,000)	2,899 (31,200)	4,831 (52,000)	2,899 (31,200)	4,831 (52,000)
Scrap Recovery and Waste Processing	186 (2,000)	279 (3,000)	1,208 (13,000)	1,812 (19,500)	1,208 (13,000)	1,812 (19,500)	1,812 (19,500)	1,812 (19,500)
TOTALS	3,728 (40,130)	4,307 (46,360)	15,247 (164,115)	16,020 (172,435)	11,325 (121,900)	16,121 (173,525)	12,429 (133,790)	15,358 (176,075)

Table A-2. Facility Capital Costs for PWR Fuel Fabrication and Refabrication Plants

Category	Costs for Fuel Type ($,000)							
	$(^{235}U,U)O_2$	$(^{235}U,Th)O_2$	$(^{233}U,U)O_2$	$(^{233}U,Th)O_2$	$(Pu,U)O_2$[a]	$(Pu,U)O_2$[b]	$(Pu,Th)O_2$[a]	$(Pu,Th)O_2$[b]
Operations	8,026	9,272	196,938	206,922	121,900	208,230	133,790	211,290
Contact Maintenance	3,933	3,933	3,282	3,448	24,380	3,470	26,758	3,522
Remote Maintenance			196,938	206,922		208,230		211,290
Operations Support	4,013	4,936	16,412	17,244	12,190	17,352	13,379	17,608
Facility Support	1,827	1,827	16,740	17,588	9,752	17,700	10,703	17,960
Quality Control	2,800	2,800	35,000	52,500	35,000	52,500	35,000	52,500
Change Rooms	401	416	740	742	724	740	726	742
Warehouse	400	400	260	260	260	260	260	260
Land Acquisition and Site Preparation	1,000	1,000	1,000	1,000	1,000	1,000	1,000	1,000
Office Building	1,500	1,500	1,700	1,700	1,700	1,700	1,700	1,700
Licensing and Environmental	700	700	1,500	1,500	1,500	1,500	1,500	1,500
TOTALS	24,600 (31,980)	26,784 (34,819)	470,510	509,826	208,406	512,682	224,816	519,372

Table A-3. Equipment Capital Costs for PWR Fuel Fabrication and Refabrication Plants

Category	Costs for Fuel Type ($,000)							
	$(^{235}U,U)O_2$	$(^{235}U,Th)O_2$	$(^{233}U,U)O_2$	$(^{233}U,Th)O_2$	$(Pu,U)O_2$[a]	$(Pu,U)O_2$[b]	$(Pu,Th)O_2$[a]	$(Pu,Th)O_2$[b]
Operations	11,380	15,496	105,604	112,536	94,924	112,136	96,074	112,536
Contact Maintenance	11,380	15,496			74,924		76,074	
Remote Maintenance			95,604	102,536		102,136		102,536
Operations Support	4,268	5,811	5,811	5,811	5,811	5,811	5,811	5,811
Facility Support	5,690	7,748	35,852	38,451	28,097	38,301	28,528	38,451
Quality Control	1,423	1,937	6,272	6,272	4,704	6,272	4,704	6,272
Warehouse	60	60	78	78	78	78	78	78
TOTALS	34,201	46,548	249,221	265,684	208,538	264,734	211,269	265,684

Table A-4. Annual Operating Costs for PWR Fuel Fabrication and Refabrication Plants

Cost Category	Costs for Fuel Type ($,000)							
	$(^{235}U,U)O_2$	$(^{235}U,Th)O_2$	$(^{233}U,U)O_2$	$(^{233}U,Th)O_2$	$(Pu,U)O_2$[a]	$(Pu,U)O_2$[b]	$(Pu,Th)O_2$[a]	$(Pu,Th)O_2$[b]
Personnel (Variable)	10,164	10,499	18,223	18,488	18,490	18,489	18,117	18,488
Personnel (Fixed)	2,803	2,928	4,428	4,523	3,936	4,428	4,405	4,523
Overhead	177	177	177	177	177	177	177	177
Utilities	239	249	1,614	1,738	1,363	1,732	1,383	1,738
TOTALS	13,383	13,853	24,442	24,926	23,966	24,826	24,082	24,926

Table A-5. Annual Materials Costs for PWR Fuel Fabrication and Refabrication Plants

Cost Category	Costs for Fuel Type ($,000)							
	$(^{235}U,U)O_2$	$(^{235}U,Th)O_2$	$(^{233}U,U)O_2$	$(^{233}U,Th)O_2$	$(Pu,U)O_2$[a]	$(Pu,U)O_2$[b]	$(Pu,Th)O_2$[a]	$(Pu,Th)O_2$[b]
Hardware	20,899	22,302	19,291	19,426	19,291	19,291	19,426	19,426
Direct Materials	476	476	440	440	605	605	605	605
Indirect Materials	538	551	5,497	5,520	5,725	5,793	6,064	6,287
Supplies	1,128	1,128	1,974	1,974	1,974	2,074	2,074	2,274
TOTALS	23,041	24,457	27,202	27,360	27,595	27,763	28,169	28,592

Table A-6. Space Requirements for Process Functions in HWR Fuel Fabrication and Refabrication Plants

Functional Area	Space Requirements for Fuel Type, m^2 (ft^2)								
	UO_2 (Natural)	$(^{235}U,U)O_2$	$(^{235}U,Th)O_2$	$(^{233}U,U)O_2$	$(^{233}U,Th)O_2$	$(Pu,U)O_2$[a]	$(Pu,U)O_2$[b]	$(Pu,Th)O_2$[a]	$(Pu,Th)O_2$[b]
UF_6 Receipt and Conversion	218 (2,350)	511 (5,500)	255 (2,750)						
Powder Receipt and Storage			158 (1,700)	411 (4,420)	411 (4,420)	411 (4,420)	411 (4,420)	411 (4,420)	411 (4,420)
Powder Preparation	218 (2,350)	437 (4,700)	497 (5,350)	628 (6,760)	628 (6,760)	628 (6,760)	628 (6,760)	628 (6,760)	628 (6,760)
Pelletization	177 (1,900)	177 (1,900)	204 (2,200)	266 (2,860)	266 (2,860)	266 (2,860)	266 (2,860)	266 (2,860)	266 (2,860)
Pellet Sintering, Grinding, and Inspection	543 (5,850)	543 (5,850)	674 (7,250)	876 (9,425)	1,045 (11,245)	1,146 (12,335)	1,146 (12,335)	1,383 (14,885)	1,383 (14,885)
Fuel Rod Loading and Welding	234 (2,515)	338 (3,640)	338 (3,640)	1,003 (10,800)	1,003 (10,800)	837 (9,010)	1,003 (10,800)	837 (9,010)	1,003 (10,800)
Fuel Rod Inspection and Storage	719 (7,740)	883 (9,500)	883 (9,500)	1,993 (21,450)	1,993 (21,450)	1,389 (14,950)	1,993 (21,450)	1,389 (14,950)	1,993 (21,450)
Fuel Assembly Fabrication	643 (6,925)	790 (8,500)	790 (8,500)	1,389 (14,950)	1,389 (14,950)	1,027 (11,050)	1,389 (14,950)	1,027 (11,050)	1,389 (14,950)
Fuel Assembly Inspection	190 (2,040)	190 (2,040)	190 (2,040)	657 (7,070)	657 (7,070)	575 (6,190)	657 (7,070)	575 (6,190)	657 (7,070)
Fuel Assembly Packaging, Storage, and Shipping	186 (2,000)	186 (2,000)	186 (2,000)	4,831 (52,000)	4,831 (52,000)	2,899 (31,200)	4,831 (52,000)	2,899 (31,200)	4,831 (52,000)
Scrap Recovery and Waste Processing	139 (1,500)	186 (2,000)	279 (3,000)	1,208 (13,000)	1,812 (19,500)	1,208 (13,000)	1,812 (19,500)	1,812 (19,500)	1,812 (19,500)
TOTALS	3,267 (35,170)	4,239 (45,630)	4,453 (47,930)	13,261 (142,735)	14,033 (151,055)	10,384 (111,775)	14,135 (152,145)	11,225 (120,825)	14,372 (154,695)

Table A-7. Facility Capital Costs for HWR Fuel Fabrication and Refabrication Plants

Cost Category	Costs for Fuel Type ($,000)								
	UO_2 (Natural)	$(^{235}U,U)O_2$	$(^{235}U,Th)O_2$	$(^{233}U,U)O_2$	$(^{233}U,Th)O_2$	$(Pu,U)O_2$[a]	$(Pu,U)O_2$[b]	$(Pu,Th)O_2$[a]	$(Pu,Th)O_2$[b]
Operations	7,034	9,126	9,586	163,408	181,404	114,288	181,503	123,519	185,820
Contact Maintenance	3,204	3,933	4,778	2,723	3,023	22,858	3,025	24,704	3,097
Remote Maintenance				163,408	181,404		181,503		185,820
Operations Support	1,338	1,338	1,338	13,617	15,117	11,429	15,125	12,352	15,485
Facility Support	1,488	1,827	1,827	13,890	15,419	5,943	15,428	6,423	15,795
Quality Control	1,400	1,400	1,400	52,500	52,500	35,000	52,500	35,000	52,500
Change Rooms	283	331	340	534	535	524	534	526	535
Warehouse	400	400	400	260	260	260	260	260	260
Land Acquisition and Site Preparation	1,000	1,000	1,000	1,000	1,000	1,000	1,000	1,000	1,000
Office Building	1,057	1,237	1,227	1,700	1,700	1,700	1,700	1,700	1,700
Licensing and Environmental	700	700	700	1,500	1,500	1,500	1,500	1,500	1,500
TOTALS	17,904	21,292	22,596	414,540	453,862	194,502	454,078	206,984	463,512

Table A-8. Equipment Capital Costs for HWR Fuel Fabrication and Refabrication Plants

Cost Category	Costs for Fuel Type ($,000)								
	UO_2 (Natural)	$(^{235}U,U)O_2$	$(^{235}U,Th)O_2$	$(^{233}U,U)O_2$	$(^{233}U,Th)O_2$	$(Pu,U)O_2$[a]	$(Pu,U)O_2$[b]	$(Pu,Th)O_2$[a]	$(Pu,Th)O_2$[b]
Operations	9,093	11,012	14,678	96,495	105,040	88,955	104,640	89,355	104,640
Contact Maintenance	8,983	11,012	14,678			68,955		69,355	
Remote Maintenance				86,495	95,040		94,640		94,640
Operations Support	3,372	4,130	5,504	5,504	5,504	5,504	5,504	5,504	5,504
Facility Support	4,497	5,506	7,339	22,436	35,640	25,858	35,490	26,008	35,490
Quality Control	1,497	1,497	1,974	5,988	5,988	5,988	5,988	5,988	5,988
Warehouse	60	60	60	78	78	78	78	78	78
TOTALS	27,412	33,217	44,233	226,996	247,290	195,338	246,340	196,288	246,340

Table A-9. Annual Operating Costs for HWR Fuel Fabrication and Refabrication Plants

Cost Category	Costs for Fuel Type ($,000)								
	UO_2 (Natural)	$(^{235}U,U)O_2$	$(^{235}U,Th)O_2$	$(^{233}U,U)O_2$	$(^{233}U,Th)O_2$	$(Pu,U)O_2$[a]	$(Pu,U)O_2$[b]	$(Pu,Th)O_2$[a]	$(Pu,Th)O_2$[b]
Personnel (Variable)	6,466	7,941	8,214	11,910	11,947	11,800	11,935	11,822	11,953
Personnel (Fixed)	2,642	2,642	2,760	4,174	4,200	4,111	4,174	4,130	4,200
Overhead	177	177	177	177	177	177	177	177	177
Utilities	179	217	237	1,485	1,518	1,278	1,512	1,285	1,512
TOTALS	9,464	10,977	11,388	17,746	17,842	17,366	17,798	17,414	17,842

Table A-10. Annual Materials Costs for HWR Fuel Fabrication and Refabrication Plants

Cost Category	Costs for Fuel Type ($,000)								
	UO_2 (Natural)	$(^{235}U,U)O_2$	$(^{235}U,Th)O_2$	$(^{233}U,U)O_2$	$(^{233}U,Th)O_2$	$(Pu,U)O_2$[a]	$(Pu,U)O_2$[b]	$(Pu,Th)O_2$[a]	$(Pu,Th)O_2$[b]
Hardware	9,064	9,064	10,398	8,366	9,598	8,366	8,366	9,598	9,598
Direct Materials	476	476	476	440	440	605	605	605	605
Indirect Materials	538	538	538	5,497	5,655	5,725	5,793	5,793	6,064
Supplies	738	1,128	1,128	1,974	1,974	1,974	2,074	2,074	2,226
TOTALS	10,816	11,206	12,540	16,277	17,667	16,670	16,838	18,070	18,493

Table A-11. Space Requirements for Process Functions in LMFBR Oxide Fuel Fabrication and Refabrication Plants

Functional Area	Space Requirements for Fuel Type, m^2 (ft^2)								
	$(^{235}U,Th)O_2/ThO_2$	$(^{233}U,Th)O_2/ThO_2$	$(Pu,U)O_2/UO_2$[a]	$(Pu,U)O_2/UO_2$[b]	$(Pu,Th)O_2/ThO_2$[a]	$(Pu,Th)O_2/ThO_2$[b]	UO_2(RB)	ThO_2(RB)	ThO_2(RB)
Conversion	255 (2,750)						218 (2,350)	230 (2,475)	
Powder Receipt and Storage	316 (3,400)	821 (8,840)	493 (5,304)	493 (5,304)	493 (5,304)	821 (8,840)			471 (5,070)
Powder Preparation	557 (6,000)	2,126 (22,880)	870 (9,360)	1,058 (11,388)	870 (9,360)	1,763 (18,980)	218 (2,350)	230 (2,475)	688 (7,410)
Pelletization	325 (3,500)	1,135 (12,220)	457 (4,914)	681 (7,332)	457 (4,914)	1,135 (12,220)	177 (1,900)	177 (1,900)	302 (3,250)
Pellet Sintering, Grinding, and Inspection	1,236 (13,300)	4,831 (52,000)	2,996 (32,253)	4,464 (48,048)	2,996 (32,253)	5,845 (62,920)	543 (5,850)	543 (5,850)	1,649 (17,745)
Fuel Rod Loading and Welding	775 (8,340)	2,388 (25,701)	1,676 (18,044)	2,388 (25,701)	1,676 (18,044)	2,388 (25,701)	295 (3,170)	387 (4,170)	1,007 (10,842)
Fuel Rod Inspection and Storage	2,137 (23,000)	5,676 (61,100)	3,986 (42,900)	5,676 (61,100)	3,986 (42,900)	5,676 (61,100)	719 (7,740)	719 (7,740)	3,019 (32,500)
Fuel Assembly Fabrication	1,540 (16,580)	4,263 (45,890)	3,176 (34,190)	4,263 (45,890)	3,176 (34,190)	4,263 (45,890)	697 (7,500)	697 (7,500)	1,812 (19,500)
Fuel Assembly Inspection	379 (4,080)	657 (7,072)	616 (6,630)	657 (7,072)	616 (6,630)	657 (7,072)	232 (2,500)	255 (2,743)	1,232 (13,260)
Fuel Assembly Packaging, Storage and Shipping	1,115 (12,000)	9,662 (104,000)	5,797 (62,400)	9,662 (104,000)	5,797 (62,400)	9,662 (104,000)	226 (2,436)	262 (2,822)	4,831 (52,000)
Scrap Recovery and Waste Processing	557 (6,000)	1,812 (19,500)	1,208 (13,000)	1,812 (19,500)	1,208 (13,000)	1,812 (19,500)	139 (1,500)	279 (3,000)	725 (7,800)
TOTALS	9,193 (98,950)	33,371 (359,203)	21,274 (228,995)	31,154 (335,335)	21,274 (228,995)	34,023 (366,223)	3,465 (37,296)	3,771 (40,675)	15,736 (169,377)

Table A-12. Facility Capital Costs for LMFBR Oxide Fuel Fabrication and Refabrication Plants

Cost Category	Costs for Fuel Type, $ thousands								
	$(^{235}U,Th)O_2/ThO_2$	$(^{233}U,Th)O_2/ThO_2$	$(Pu,U)O_2/UO_2$[a]	$(Pu,U)O_2/UO_2$[b]	$(Pu,Th)O_2/ThO_2$[a]	$(Pu,Th)O_2/ThO_2$[b]	UO_2(RB)	ThO_2(RB)	ThO_2(RB)
Operations	19,790	431,044	228,995	402,402	228,995	439,468	7,459	8,135	203,252
Contact Maintenance	3,958	7,184	45,799	6,708	45,799	7,324	3,730	4,068	3,388
Remote Maintenance		431,044		402,402		439,468			203,252
Operations Support	9,895	35,920	22,900	33,534	22,900	36,622	3,730	4,068	16,938
Facility Support	6,729	36,639	18,320	34,204	18,320	37,354	2,984	3,254	17,277
Quality Control	5,850	53,727	36,227	53,792	36,235	53,983	2,800	2,800	29,227
Change Rooms	468	783	783	800	784	851	401	401	784
Warehouse	400	260	260	260	260	260	400	400	260
Land Acquisition and Site Preparation	1,000	1,000	1,000	1,000	1,000	1,000	1,000	1,000	1,000
Office Building	1,500	1,700	1,700	1,700	1,700	1,700	1,500	1,500	1,700
Licensing and Environmental	700	1,500	1,500	1,500	1,500	1,500	300	300	1,200
TOTALS	50,290	1,000,801	357,484	938,302	357,493	1,019,530	24,304	25,926	478,278

Table A-13. Equipment Capital Costs for LMFBR Oxide Fuel Fabrication and Refabrication Plants

Cost Category	Costs for Fuel Type, $ thousands								
	$(^{235}U,Th)O_2/ThO_2$	$(^{233}U,Th)O_2/ThO_2$	$(Pu,U)O_2/UO_2$[a]	$(Pu,U)O_2/UO_2$[b]	$(Pu,Th)O_2/ThO_2$[a]	$(Pu,Th)O_2/ThO_2$[b]	UO_2(RB)	ThO_2(RB)	ThO_2(RB)
Operations	28,492	121,446	102,739	114,231	102,739	129,111	11,159	12,076	147,216
Contact Maintenance	28,492		82,739		82,739		11,159	12,076	
Remote Maintenance		111,446		104,231		119,111			127,216
Operations Support	10,336	10,336	10,336	10,336	10,336	10,336	4,268	5,187	5,187
Facility Support	10,685	41,792	31,027	39,087	31,027	44,667	5,580	6,038	47,706
Quality Control	2,846	5,692	4,269	5,692	4,269	5,692	1,423	1,423	5,692
Warehouse	600	780	780	780	780	780	60	60	780
TOTALS	81,451	291,492	231,890	274,357	231,890	309,697	33,649	36,860	333,797

Table A-14. Annual Operating Costs for LMFBR Oxide Fuel Fabrication and Refabrication Plants

Cost Category	Annual Costs for Fuel Type, $ thousands								
	$(^{235}U,Th)O_2/ThO_2$	$(^{233}U,Th)O_2/ThO_2$	$(Pu,U)O_2/UO_2$[a]	$(Pu,U)O_2/UO_2$[b]	$(Pu,Th)O_2/ThO_2$[a]	$(Pu,Th)O_2/ThO_2$[b]	UO_2(RB)	ThO_2(RB)	ThO_2(RB)
Personnel (Variable)	12,354	18,873	18,257	19,196	18,462	19,308	10,355	10,355	19,081
Personnel (Fixed)	2,611	5,312	5,070	5,295	5,102	5,295	2,611	2,611	5,102
Overhead	177	177	177	177	177	177	177	177	177
Utilities	569	2,037	1,620	1,917	1,917	2,164	239	239	2,037
TOTALS	15,711	26,399	25,124	26,585	25,658	26,944	13,382	13,382	26,397

Table A-15. Annual Materials Costs for LMFBR Oxide Fuel Fabrication and Refabrication

Cost Category	Annual Costs for Fuel Type, $ thousands								
	$(^{235}U,Th)O_2/ThO_2$	$(^{233}U,Th)O_2/ThO_2$	$(Pu,U)O_2/UO_2$[a]	$(Pu,U)O_2/UO_2$[b]	$(Pu,Th)O_2/ThO_2$[a]	$(Pu,Th)O_2/ThO_2$[b]	UO_2(RB)	ThO_2(RB)	ThO_2(RB)
Hardware	70,709	65,270	59,962	59,962	65,270	65,270	30,914	34,101	31,478
Direct Materials	7,709	7,117	7,330	7,330	7,282	7,282	476	476	440
Indirect Materials	2,246	8,340	7,534	7,534	8,075	8,075	538	551	494
Supplies	1,128	1,974	1,974	1,974	2,074	2,074	1,128	1,128	1,128
TOTALS	81,792	82,701	76,800	76,800	82,701	82,701	33,056	36,256	33,540

Table A-16. Space Requirements for Process Functions in LMFBR Carbide Fuel Refabrication Plants

Functional Area	Space Requirements for Fuel Type, m^2 (ft^2)							
	(^{233}U,Th)C/ThC	(Pu,U)C/UC[a]	(Pu,U)C/UC[b]	(Pu,Th)C/ThC[a]	(Pu,Th)C/ThC[b]	UC(RB)	ThC(RB)	ThC(RB)
Conversion						251 (2,700)	251 (2,700)	
Powder Receipt and Storage	242 (2,600)	242 (2,600)	242 (2,600)	242 (2,600)	242 (2,600)			471 (5,070)
Powder Preparation	1,329 (14,300)	1,063 (11,440)	1,329 (14,300)	1,063 (11,440)	1,329 (14,300)	251 (2,700)	251 (2,700)	1,147 (12,350)
Pelletization	604 (6,500)	380 (4,095)	604 (6,500)	380 (4,095)	604 (6,500)	348 (3,750)	348 (3,750)	815 (8,775)
Pellet Sintering, Grinding, and Inspection	3,563 (38,350)	2,304 (24,798)	3,563 (38,350)	2,304 (24,798)	3,563 (38,350)	945 (10,175)	945 (10,175)	1,736 (18,688)
Fuel Rod Loading and Welding	2,541 (27,352)	1,580 (17,004)	2,332 (25,103)	1,789 (19,253)	2,541 (27,352)	338 (3,640)	338 (3,640)	1,209 (13,013)
Fuel Rod Inspection and Storage	3,623 (39,000)	2,355 (25,350)	3,019 (32,500)	2,415 (26,000)	3,623 (39,000)	557 (6,000)	557 (6,000)	4,710 (50,700)
Fuel Assembly Fabrication	3,780 (40,690)	2,693 (28,990)	3,539 (38,090)	2,814 (30,290)	3,780 (40,690)	810 (8,720)	903 (9,720)	4,394 (47,294)
Fuel Assembly Inspection	657 (7,072)	616 (6,630)	657 (7,072)	616 (6,630)	657 (7,072)	253 (2,720)	253 (2,720)	657 (7,072)
Fuel Assembly Packaging, Storage and Shipping	9,662 (104,000)	5,797 (62,400)	9,662 (104,000)	5,797 (62,400)	9,662 (104,000)	372 (4,000)	372 (4,000)	7,246 (78,000)
Scrap Recovery and Waste Processing	2,174 (23,400)	1,449 (15,600)	2,174 (23,400)	1,449 (15,600)	2,174 (23,400)	279 (3,000)	372 (4,000)	1,208 (13,000)
TOTALS	28,174 (303,264)	18,479 (198,907)	27,120 (291,915)	18,869 (203,106)	28,174 (303,264)	4,404 (47,405)	4,404 (47,405)	23,594 (253,962)

Table A-17. Facility Capital Costs for LMFBR Carbide Fuel Refabrication Plants

Cost Category	Costs for Fuel Type, $ thousands							
	(^{233}U,Th)C/ThC	(Pu,U)C/UC[a]	(Pu,U)C/UC[b]	(Pu,Th)C/ThC[a]	(Pu,Th)C/ThC[b]	UC(RB)	ThC(RB)	ThC(RB)
Operations	454,896	248,634	437,873	253,883	454,896	14,222	14,822	380,943
Contact Maintenance	6,066	39,783	5,840	40,622	6,066	4,740	4,940	5,080
Remote Maintenance	363,917		350,298		363,917			304,754
Operations Support	30,326	19,891	29,192	20,311	30,326	4,740	4,940	25,397
Facility Support	30,934	11,935	29,775	12,186	30,934	3,792	3,972	25,904
Quality Control	57,325	36,157	57,287	36,195	57,325	4,200	4,200	35,935
Change Rooms	809	764	799	774	809	401	401	809
Warehouse	260	260	260	260	260	400	400	260
Land Acquisition and Site Preparation	1,000	1,000	1,000	1,000	1,000	1,000	1,000	1,000
Office Building	1,700	1,700	1,700	1,700	1,700	1,500	1,500	1,700
Licensing and Environmental	1,500	1,500	1,500	1,500	1,500	300	300	1,200
TOTALS	948,733	361,624	915,524	368,431	948,733	35,295	36,475	782,982

Table A-18. Equipment Capital Costs for LMFBR Carbide Fuel Refabrication Plants

Cost Category	Costs for Fuel Type, $ thousands							
	(^{233}U,Th)C/ThC	(Pu,U)C/UC[a]	(Pu,U)C/UC[b]	(Pu,Th)C/ThC[a]	(Pu,Th)C/ThC[b]	UC(RB)	ThC(RB)	ThC(RB)
Operations	122,686	108,360	120,886	109,910	122,886	18,887	20,247	111,634
Contact Maintenance		88,360		89,910		18,887	20,247	
Remote Maintenance	112,686		110,886		112,886			91,634
Operations Support	10,336	10,336	10,336	10,336	10,336	7,083	7,593	7,593
Facility Support	42,257	33,135	41,582	33,716	42,332	9,444	10,124	34,363
Quality Control	5,692	4,269	5,692	4,269	5,692	2,135	2,846	5,692
Warehouse	780	780	780	780	780	60	60	780
TOTALS	294,437	245,240	290,162	248,921	294,912	56,496	61,117	251,696

Table A-19. Annual Operating Costs for LMFBR Carbide Fuel Refabrication Plants

Cost Category	Annual Costs for Fuel Type, $ thousands							
	$(^{233}U,Th)C/ThC$	$(Pu,U)C/UC^a$	$(Pu,U)C/UC^b$	$(Pu,Th)C/ThC^a$	$(Pu,Th)C/ThC^b$	UC(RB)	ThC(RB)	ThC(RB)
Personnel (Variable)	17,637	16,504	17,377	16,794	17,637	10,355	10,355	19,799
Personnel (Fixed)	7,264	7,086	7,229	7,086	7,264	2,611	2,611	5,102
Overhead	177	177	177	177	177	177	177	177
Utilities	2,058	1,713	2,028	1,739	2,061	239	239	2,058
TOTALS	27,136	25,480	26,811	25,796	27,139	13,382	13,382	27,136

Table A-20. Annual Materials Costs for LMFBR Carbide Fuel Refabrication

Cost Category	Annual Costs for Fuel Type, $ thousands							
	$(^{233}U,Th)C/ThC$	$(Pu,U)C/UC^a$	$(Pu,U)C/UC^b$	$(Pu,Th)C/ThC^a$	$(Pu,Th)C/ThC^b$	UC(RB)	ThC(RB)	ThC(RB)
Hardware	49,968	41,122	41,122	49,968	49,968	25,355	32,505	30,005
Direct Materials	9,818	11,254	11,254	9,818	9,818	2,718	2,718	2,509
Indirect Materials	8,666	8,832	8,832	8,666	8,666	1,359	1,659	1,478
Supplies	1,974	1,974	1,974	1,974	1,974	1,128	1,128	1,128
TOTALS	70,426	63,182	63,182	70,426	70,426	30,560	38,010	35,120

Table A-21. Space Requirements for Process Functions in LMFBR Metal Fuel Refabrication Plants

Functional Area	Space Requirements for Fuel Type, m^2 (ft^2)							
	^{233}U,Th/Th	Pu,U,Zr/U[a]	Pu,U,Zr/U[b]	Pu,Th/Th[a]	Pu,Th/Th[b]	U(RB)	Th(RB)	Th(RB)
Conversion						276 (2,975)	293 (3,150)	
Powder Receipt and Storage	725 (7,800)	386 (4,160)	580 (6,240)	483 (5,200)	725 (7,800)			471 (5,070)
Powder Preparation and Reduction	2,319 (24,960)	1,075 (11,570)	1,172 (12,610)	2,174 (23,400)	2,319 (24,960)	276 (2,975)	293 (3,150)	839 (9,035)
Slug Preparation	2,488 (26,780)	1,787 (19,240)	2,488 (26,780)	1,787 (19,240)	2,488 (26,780)	929 (10,000)	929 (10,000)	2,210 (23,790)
Fuel Rod Loading and Welding	2,041 (21,970)	1,330 (14,313)	1,915 (20,618)	1,455 (15,665)	2,041 (21,970)	338 (3,640)	338 (3,640)	1,209 (13,013)
Fuel Rod Inspection and Storage	3,623 (39,000)	2,114 (22,750)	3,019 (32,500)	2,415 (26,000)	3,623 (39,000)	557 (6,000)	557 (6,000)	4,710 (50,700)
Fuel Assembly Fabrication	3,780 (40,690)	2,184 (23,504)	2,848 (30,654)	2,814 (30,290)	3,780 (40,690)	810 (8,720)	903 (9,790)	4,394 (47,294)
Fuel Assembly Inspection	657 (7,072)	616 (6,630)	657 (7,072)	616 (6,630)	657 (7,072)	253 (2,720)	253 (2,720)	657 (7,072)
Fuel Assembly Packaging, Storage, and Shipping	9,662 (104,000)	5,797 (62,400)	9,662 (104,000)	5,797 (62,400)	9,662 (104,000)	372 (4,000)	743 (8,000)	7,246 (78,000)
Scrap Recovery and Waste Processing	2,415 (26,000)	1,691 (18,200)	2,415 (26,000)	1,691 (18,200)	2,415 (26,000)	372 (4,000)	557 (6,000)	1,208 (13,000)
TOTALS	27,710 (298,272)	17,441 (182,767)	24,756 (266,474)	19,233 (207,025)	27,710 (298,272)	4,183 (45,030)	4,866 (52,380)	22,945 (246,974)

Table A-22. Facility Capital Costs for LMFBR Metal Fuel Refabrication Plants

Cost Category	Costs for Fuel Type, $ thousands							
	^{233}U,Th/Th	Pu,U,Zr/U[a]	Pu,U,Zr/U[b]	Pu,Th/Th[a]	Pu,Th/Th[b]	U(RB)	Th(RB)	Th(RB)
Operations	447,408	228,459	399,711	258,781	447,408	13,509	15,714	370,461
Contact Maintenance	5,966	36,553	5,330	41,405	5,966	4,503	5,238	4,940
Remote Maintenance	357,926		319,769		357,926			296,369
Operations Support	29,827	18,277	26,647	20,703	29,827	4,503	5,238	24,697
Facility Support	30,424	14,621	27,180	16,562	30,424	3,602	4,190	25,191
Quality Control	57,570	36,398	57,545	36,463	57,570	4,200	4,200	36,570
Change Rooms	874	828	868	846	874	401	401	874
Warehouse	260	260	260	260	260	400	400	260
Land Acquisition and Site Preparation	1,000	1,000	1,000	1,000	1,000	1,000	1,000	1,000
Office Building	1,700	1,700	1,700	1,700	1,700	1,500	1,500	1,700
Licensing and Environmental	1,500	1,500	1,500	1,500	1,500	300	300	1,200
TOTALS	934,455	339,596	841,510	379,220	934,455	33,918	38,181	763,262

Table A-23. Equipment Capital Costs for LMFBR Metal Fuel Refabrication Plants

Cost Category	Costs for Fuel Type, $ thousands							
	^{233}U,Th/Th	Pu,U,Zr/U[a]	Pu,U,Zr/U[b]	Pu,Th/Th[a]	Pu,Th/Th[b]	U(RB)	Th(RB)	Th(RB)
Operations	108,070	90,500	97,960	97,580	108,070	10,260	12,140	96,510
Contact Maintenance		70,500		77,580		10,260	12,140	
Remote Maintenance	98,070		87,960		98,070			76,510
Operations Support	10,336	10,336	10,336	10,336	10,336	3,848	4,553	4,553
Facility Support	36,776	26,438	32,985	29,093	36,776	5,130	6,070	28,691
Quality Control	5,692	4,269	5,692	4,269	5,692	2,135	2,846	5,692
Warehouse	780	780	780	780	780	60	60	780
TOTALS	259,724	202,823	235,713	219,638	259,724	31,693	37,809	212,736

Table A-24. Annual Operating Costs for LMFBR Metal Fuel Refabrication Plants

Cost Category	Costs for Fuel Type, $ thousands							
	^{233}U,Th/Th	Pu,U,Zr/U[a]	Pu,U,Zr/U[b]	Pu,Th/Th[a]	Pu,Th/Th[b]	U(RB)	Th(RB)	Th(RB)
Personnel (Variable)	19,432	18,299	19,289	18,733	19,432	10,355	10,355	21,661
Personnel (Fixed)	7,331	7,153	7,299	7,219	7,331	2,611	2,611	5,102
Overhead	177	177	177	177	177	177	177	177
Utilities	1,815	1,417	1,647	1,535	1,815	239	239	1,819
TOTALS	28,755	27,046	28,412	27,664	28,755	13,382	13,382	28,759

Table A-25. Annual Materials Costs for LMFBR Metal Fuel Refabrication

Cost Category	Costs for Fuel Type, $ thousands							
	^{233}U,Th/Th	Pu,U,Zr/U[a]	Pu,U,Zr/U[b]	Pu,Th/Th[a]	Pu,Th/Th[b]	U(RB)	Th(RB)	Th(RB)
Hardware	40,483	33,849	33,849	40,483	40,483	17,441	26,811	24,749
Direct Materials	19,454	23,971	23,971	19,454	19,454	6,431	6,774	6,231
Indirect Materials	9,235	11,496	11,496	9,235	9,235	3,215	3,387	3,115
Supplies	1,974	1,974	1,974	1,974	1,974	1,128	1,128	1,128
TOTALS	71,146	71,290	71,290	71,146	71,146	28,215	38,100	35,223

Appendix B

SUMMARY OF CAPITAL, OPERATING, AND MATERIALS COSTS ESTIMATES FOR HTGR FUELS

Table B.1. July 1978 HTGR Capital Cost Increment Estimates for HTGR Fuels (2 MT/day HM plant)

Item	LEU Fab.	MEU Current Fab.	MEU Optimized Fab.	MEU/Th Fab.	MEU/Th Refab.	MEU-233/Th Refab.	Pu/Th Refab.	HEU/Th Reference Fab.	Reference Refab. 23R/25R	HEU-233/Th Refab.
U, Pu (kg/FE)	4.88	3.09	2.62	2.84	4.46	3.99	0.84	0.74	0.65/1.24	0.56/0.63
Th, U/Th (kg/FE)	—	2.49	3.5	4.11	4.11	7.14	4.59	11.24	11.24	13.5
Total HM (kg/FE)	4.88	5.58	6.12	6.95	8.57	11.13	5.43	11.98	11.89/13/01	14/06/14.13
C:HM	450	385	348	295	240	194	375	169	170/162	143
Plant capacity (FE/yr)	106,557	93,109	84,967	74,820	56,075	43,127	88,398	43,406	40,370	34,043
Adjusted Contents:[a]										
Fissile (kg/FE)				1.93	3.55					
Fertile (kg/FE)				5.02	5.02					
Capacity factors:[b]										
Fabrication										
$X_u(U+Th)/X_o(U+Th) = C_E$	1.088	0.874	0.844	0.939				1		
Refabrication										
$X_u(U)/X_o(U) = C_E$					4.44	5.7	1.2		1	0.873
$X_u(FE)/X_o(FE) = C_F$	2.455	2.147	1.957	1.724	1.389	1.068	2.190	1	1	0.843
Cost multipliers[b]										
Equipment										
Fabrication (R_E)	1.604	1.563	1.470	1.369				1		
Refabrication (R_E)					1.624	1.621	1.62		1	0.905
Facilities (R_F)	1.714	1.582	1.496	1.387	1.300	1.054	1.872	1	1	0.872
Capital estimates										
Facility										
Calculated	87	81	76	71	395	320	569			265
Adjustment	—	—	—	—	—	—	—			—
Final ($\$10^6$)	87	81	76	71	395	320	569	51	304	265
Equipment										
Calculated	266	260	244	227	809	807	807			450
Adjustment	—	—	—	—	—	—	—			—
Final ($\$10^6$)	266	260	244	227	809	807	807	166	498	450

[a] Adjusted for 3.5:1 = Th:U ratio in fertile particles. Applies only to cases in which fissile material is contained in fertile particles.

[b] Subscript E refers to equipment and subscript F refers to facility.

Table B.2. July 1978 HTGR Operating Cost Increment Estimates for HTGR Fuels (2 MT/day HM plant)

	Fuel Cycles									
	LEU	MEU Current	MEU Optimized	MEU/Th		MEU-233/Th Refab.	Pu/Th Refab.	HEU (Ref)		HEU-233 Refab.
				Fab.	Refab.			Fab.	Refab.	
Production rate at 2 MT/day (FE/yr)	106,560	93,190	84,970	74,820	56,070	48,130	88,400	43,410	40,370	34,040
Fixed labor — 24K/MY (MY)	160	150	140	150	180	180	170	140	160	160
Variable labor — 21K/MY (MY)	800	710	660	650	1,560	1,560	1,400	420	840	760
Total[a]	960	860	800	800	1,740	1,740	1,570	560	1,000	920
Utilities and miscellaneous supplies (10^6 \$/yr)	1.7	1.5	1.5	1.5	2.5	2.5	2.0	1.0	2.0	2.0
OH = 1000 \$/fixed MY	0.16	0.15	0.14	0.15	0.18	0.18	0.17	0.14	0.16	0.16
Fixed labor (10^6 \$/yr)	3.84	3.60	3.40	3.60	4.3	4.3	4.1	3.4	3.84	3.84
Variable labor (10^6 \$/hr)	16.8	14.9	13.85	13.65	32.76	32.76	29.4	8.82	17.64	15.96
Total labor and OH (10^6 \$/yr)	20.8	18.65	17.39	17.4	37.24	37.24	33.67	12.36	21.64	19.96
Total Operating (\$/yr)	22.5	20.2	18.9	18.9	39.7	39.7	35.7	13.4	23.6	23.0

[a]Manpower based on $(X_u/X_o)^{0.8}$ for equipment applied to total only; split is Eng. judgment.

Table B.3. July 1978 HTGR Hardware and Materials Cost Increment Estimates for HTGR Fuels (2 MT/day HM plant)

	Fuel Cycles									
	LEU	MEU Current	MEU Optimized	MEU/Th		MEU-233/Th Refab.	Pu/Th Refab.	HEU (Ref)		HEU-233 Refab.
				Fab.	Refab.			Fab.	Refab.	
U, Pu, (kg/FE)	4.88	3.09	2.62	1.93	3.55	3.99	0.84	0.74	0.65/1.24	0.6
Th, (kg/FE)		2.49	3.50	5.02	5.02	7.14	4.59	11.24	11.24	13.6
ThO_2 (processing and QA) (40 $/kg)	0	100	140	200	200	285	185	450	450	540
Uranium penalty				50	50					
Shim (17 $/kg)	190	170	170	170	170	170	170	170	170	170
Poison waters (60 $/FE)	60	60	60	60	60	60	60	60	60	60
Matrix (2)	25	25	25	25	25	25	25	25	25	25
Block and plug (1200/FE)	1,200	1,200	1,200	1,200	1,200	1,200	1,200	1,200	1,200	1,200
Expendables										
R (308 $/FE)					308	308	308		308	308
F (250 $/FE)	250	250	250	250				250		
Totals ($/FE)	1,725	1,805	1,845	1,955	2,013	2,048	1.948	2,155	2,213	2,303
kg HM/FE	4.88	5.58	6.12	6.95	8.57	11.13	5.43	11.98	11.89	14.1
C/HM	450	385	348	295	240	195	375	169	110/162	143
Material cost ($/kg HM)	353.5	323.5	301.5	281.3	234.9	184.0	358.7	189.9	186.1	163
Annual Materials (10^6 $/yr)	183.8	168.2	156.8	146.3	112.7	88.3	172.2	93.5	89.3	78.4

ORNL/TM-6640
Distribution
Category UC-80

INTERNAL DISTRIBUTION

1–2. Central Research
3. Document Reference Section
4–5. Laboratory Records Department
6. Laboratory Records, ORNL R.C.
7. ORNL Patent Section
8. T. D. Anderson
9. W. J. Armento
10. D. E. Bartine
11. R. L. Beatty
12. J. O. Blomeke
13. E. S. Bomar
14. H. I. Bowers
15. T. J. Burns
16. J. A. Carpenter, Jr.
17. A. J. Caputo
18. W. L. Carter
19. J. C. Cleveland
20. J. A. Conlin, Jr.
21. A. G. Croff
22. J. G. Delene
23. R. G. Donnelly
24. W. P. Eatherly
25. E. H. Gift
26. R. W. Glass
27. F. E. Harrington
28. M. R. Hayns
29. R. E. Helms
30–32. M. R. Hill
33. F. J. Homan
34. C. R. Hudson
35–44. R. R. Judkins
45–47. P. R. Kasten
48. M. A. Kuliasha
49. W. J. Lackey
50. R. E. Leuze
51. M. H. Lloyd
52. R. S. Lowrie
53. J. E. Mack
54. M. M. Martin
55. S. R. McNeany
56. R. E. Norman
57. K. J. Notz
58–67. A. R. Olsen
68. R. T. Primm
69. H. E. Reesor
70. J. P. Renier
71. T. F. Scanlan
72. J. E. Selle
73. G. R. Smolen
74. I. Spiewak
75. D. P. Stinton
76. V. J. Tennery
77. S. M. Tiegs
78. J. E. Vath
79. D. R. Vandy
80. H. J. Wallace
81. G. C. Wei
82. D. F. Williams
83. B. A. Worley
84. R. W. Balluffi (Consultant)
85. A. L. Bement, Jr. (Consultant)
86. W. R. Hibbard, Jr. (Consultant)
87. E. H. Kottcamp, Jr. (Consultant)
88. M. J. Mayfield (Consultant)
89. J. T. Stringer (Consultant)

EXTERNAL DISTRIBUTION

90–92. Hanford Engineering Development Laboratory, P.O. Box 1970, Richland, WA 99352
M. C. J. Carlson
J. P. Keenan
R. P. Omberg
93. Pacific Northwest Laboratory, P.O. Box 999, Richland, WA 99352
S. Goldsmith
94–96. DOE Division of Nuclear Power Development, Washington, DC 20545
A. J. Pressesky
W. W. Ballard
G. A. Newby

97–98. DOE Division of Plans and Analysis, Washington, DC 20545
S. T. Brewer
M. W. Koehlinger

99–102. DOE Nuclear Alternative Systems Assessment Division, Washington, DC 20545
E. J. Hanrahan C. Sege
D. E. Mathes S. Strauch

103–104. DOE Office of INFCE and International Nuclear Affairs, Washington, DC 20545
S. Rosen
C. Weber

105. DOE Office of Nuclear Energy Programs, Washington, DC 20545
R. L. Ferguson, Director

106. DOE San Francisco Operations Office, 1333 Broadway, Wells Fargo Building, Oakland, CA 94612
Manager

107–108. DOE Oak Ridge Operations Office, P.O. Box E, Oak Ridge, TN 37830
Assistant Manager, Energy Research and Development
S. W. Ahrends

109–245. DOE Technical Information Center, P.O. Box 62, Oak Ridge, TN 37830
For distribution as shown in TID-4500 Distribution Category,
UC-80 (General Reactor Technology)