MARTIN MARIETTA ENERGY SYSTEMS LIBRARIES

3 4456 0284944 3

ORNL-5220

Analysis and Computer Programs for Eddy Current Coils Concentric with Multiple Cylindrical Conductors

C. W. Nestor, Jr.
C. V. Dodd
W. E. Deeds

OAK RIDGE NATIONAL LABORATORY
CENTRAL RESEARCH LIBRARY
CIRCULATION SECTION
4500N ROOM 175
LIBRARY LOAN COPY
DO NOT TRANSFER TO ANOTHER PERSON
If you wish someone else to see this report, send in name with report and the library will arrange a loan.

OAK RIDGE NATIONAL LABORATORY
OPERATED BY UNION CARBIDE CORPORATION - FOR THE DEPARTMENT OF ENERGY

ORNL-5220
UC-32 – Mathematics and Computers

Contract No. W-7405-eng-26

COMPUTER SCIENCES DIVISION
METALS AND CERAMICS DIVISION

ANALYSIS AND COMPUTER PROGRAMS FOR EDDY CURRENT COILS CONCENTRIC WITH MULTIPLE CYLINDRICAL CONDUCTORS

C. W. Nestor, Jr., C. V. Dodd, and W. E. Deeds*

Sponsor: C. V. Dodd

Originator: C. W. Nestor, Jr.

Date Published: July 1979

*Consultant fromThe University of Tennessee, Knoxville, Tennessee

OAK RIDGE NATIONAL LABORATORY
Oak Ridge, Tennessee 37830
operated by
UNION CARBIDE CORPORATION
for the
DEPARTMENT OF ENERGY

MARTIN MARETTA ENERGY SYSTEMS LIBRARIES
3 4456 0284944 3

CONTENTS

List of Figures v

Acknowledgments vii

Abstract 1

Introduction 1

General Analysis 1

Calculation of Induction Phenomena 15

- Mutual Impedance 15
- Pickup Coils in Region C 18

Effect of Defects 21

Eddy Current Heating 23

References 25

Appendix - Computer Programs 27

- Interactive Computer Program 27
- Noninteractive Computer Program 47
- Subroutines for Multiconductor Problem 55
  - Subroutine ADAPT 56
  - Subroutine ADAP2 60
  - Subroutine GAUSS 64
  - Subroutine GAUS2 66
  - Subroutine CMDBES 69
  - Subroutine BESI 79
  - Subroutine BESK 81
  - Function XJJNT 83
  - Function XKKNT 88
  - Subroutine QIDF 91
  - Function CINT 94
  - Subroutine DJCO 96
  - Subroutine CITBLO 100
  - Subroutine DEFINT 102
  - Subroutine UVMAT 103
  - Subroutine COLAIR 112
- Index of Subroutine Definitions and Calls 131

LIST OF FIGURES

Fig. 1 Multiple cylindrical conductors encircling and encircled by a delta-function coil 3

Fig. 2 Top view of a typical boundary between two regions 5

Fig. 3 Single coil (or identical, intermeshed coils) with multiple cylindrical conductors 11

Fig. 4 Multiple cylindrical conductors encircling and encircled by two disjoint coils 16

Fig. 5 Multiple cylindrical conductors encircling and encircled by two coils in the same radial region 19

Fig. A1 Data file for input to noninteractive program 48

ACKNOWLEDGMENTS

The authors wish to express their thanks to R. B. Hofstra for assistance in programming earlier versions of some of the routines in this compendium, to D. L. Hetrick for programming the interactive input/output and property changing routines, and to Connie Ferry and Karen Barry for their expert help in the preparation of this report.

ANALYSIS AND COMPUTER PROGRAMS FOR EDDY CURRENT COILS CONCENTRIC WITH MULTIPLE CYLINDRICAL CONDUCTORS

C. W. Nestor, Jr.,* C. V. Dodd,** W. E. Deeds+

ABSTRACT

A general derivation is performed to determine the vector potential produced by eddy current coils concentric with multiple cylindrical conductors. The conductors may be inside the coils, encircling the coils, or both. From the vector potential certain physical phenomena, such as coil impedance, mutual coupling between coils, effect of defects, and ohmic heating, are calculated. The coils may be placed in electrical circuits and the voltages produced are calculated.

INTRODUCTION

There are a large number of electromagnetic induction devices in industry that consist of coils encircling multiple concentric conductors or coils inside of multiple concentric conductors. These induction devices include induction furnaces, induction probes for measuring the level of a molten metal, eddy current coils for materials testing purposes, and linear variable differential transformers. Analytical solutions have been derived[1] and computer programs written[2] for coils either inside or encircling concentric conductors consisting of two different conductivities. In the present work we shall extend the solutions to any arbitrary number of conductors in a manner that is easily programmable on a digital computer.[3]

The main goal of these derivations and the programs is to allow new and different problems to be attacked and solved immediately, without first having to derive the problem and then write a computer program. Computer programs to perform calculations for many of the problems analyzed are included in the Appendix, and instructions are given on modifications of the programs needed for other problems.

GENERAL ANALYSIS

The general configuration to be considered is an axially symmetric driving coil located concentrically with an arbitrary number of cylindrical conductors with arbitrary thickness, permeability, permittivity, and conductivity. For simplicity, we assume that all media are linear, isotropic and homogeneous, and the driving current is time-harmonic with frequency, ω. Then the current density $\bar{J}$ and vector potential $\bar{A}$ will have only azimuthal components in cylindrical coordinates:

---

*Computer Sciences Division.

**Metals and Ceramics Division.

+University of Tennessee.

$$\bar{J}(x) = J(r,z)\bar{e}_\theta \tag{1}$$

and

$$\bar{A}(x) = A(r,z)\bar{e}_\theta \ , \tag{2}$$

where $\bar{e}_\theta$ is an azimuthal unit vector. The vector potential at (r,z), produced by a driving coil with a current density J(r′,z′) at (r′,z′), can be expressed as

$$A(r,z) = \iint_{\substack{\text{Driving}\\ \text{Coil}}} G(r,z;r',z')J(r',z')dr'dz' \ , \tag{3}$$

where G(r,z;r′,z′) is the Green's function for a unit δ-function current at (r′,z′). In a linear, isotropic, homogeneous medium, the Green's function satisfies[1]

$$\left[\frac{\partial^2}{\partial r^2} + \frac{1}{r}\frac{\partial}{\partial r} - \frac{1}{r^2} + \frac{\partial^2}{\partial z^2} - j\omega\mu\sigma + \omega^2\mu\epsilon\right] G(r,z;r',z') = -\mu\delta(r-r')\delta(z-z') \ , \tag{4}$$

where μ, ϵ, and σ are the permeability, permittivity, and conductivity of the medium. The solution of Eq. (4) for each medium must also satisfy the proper boundary conditions.

We shall first consider a δ-function coil coaxial with k+k′−2 cylindrical conductors; k−1 of them inside the coil and k′−1 of them outside the coil, as shown in Fig. 1. The general solution of Eq. (4) in any region, n, may be obtained by separation of variables. Setting

$$G^{(n)}(r,z;r',z') = R(r)\ Z(z)$$

and dividing Eq. (4) by R(r) Z(z) gives:

$$\frac{1}{R(r)}\frac{\partial^2 R(r)}{\partial r^2} + \frac{1}{rR(r)}\frac{\partial R(r)}{\partial r} + \frac{1}{Z(z)}\frac{\partial^2 Z(z)}{\partial z^2} - \frac{1}{r^2} + \omega^2\mu_n\epsilon_n - j\omega\mu_n\sigma_n = 0 \ . \tag{5}$$

The subscripts n on the permeability, permittivity, and conductivity denote the values of these parameters in the region n. We shall choose the separation "constant," α^2, to be negative and define

$$\alpha_n^2 = \alpha^2 + j\omega\mu_n\sigma_n - \omega^2\mu_n\epsilon_n \ .$$

Then we can write for the z dependence

$$\frac{1}{Z(z)}\frac{d^2Z(z)}{dz^2} = -\alpha^2 \ . \tag{6}$$

Solving this differential equation gives:

$$Z(z) = A \sin \alpha(z-z_0) + B \cos \alpha(z-z_0) \ . \tag{7}$$

We can drop the sine term due to the symmetry about z = z′.

The radial term has the following dependence:

$$\frac{r^2 d^2R(r)}{dr^2} + \frac{r dR(r)}{dr} - (r^2\alpha_n^2 + 1)R(r) = 0 \ . \tag{8}$$

ORNL-DWG 72-3047

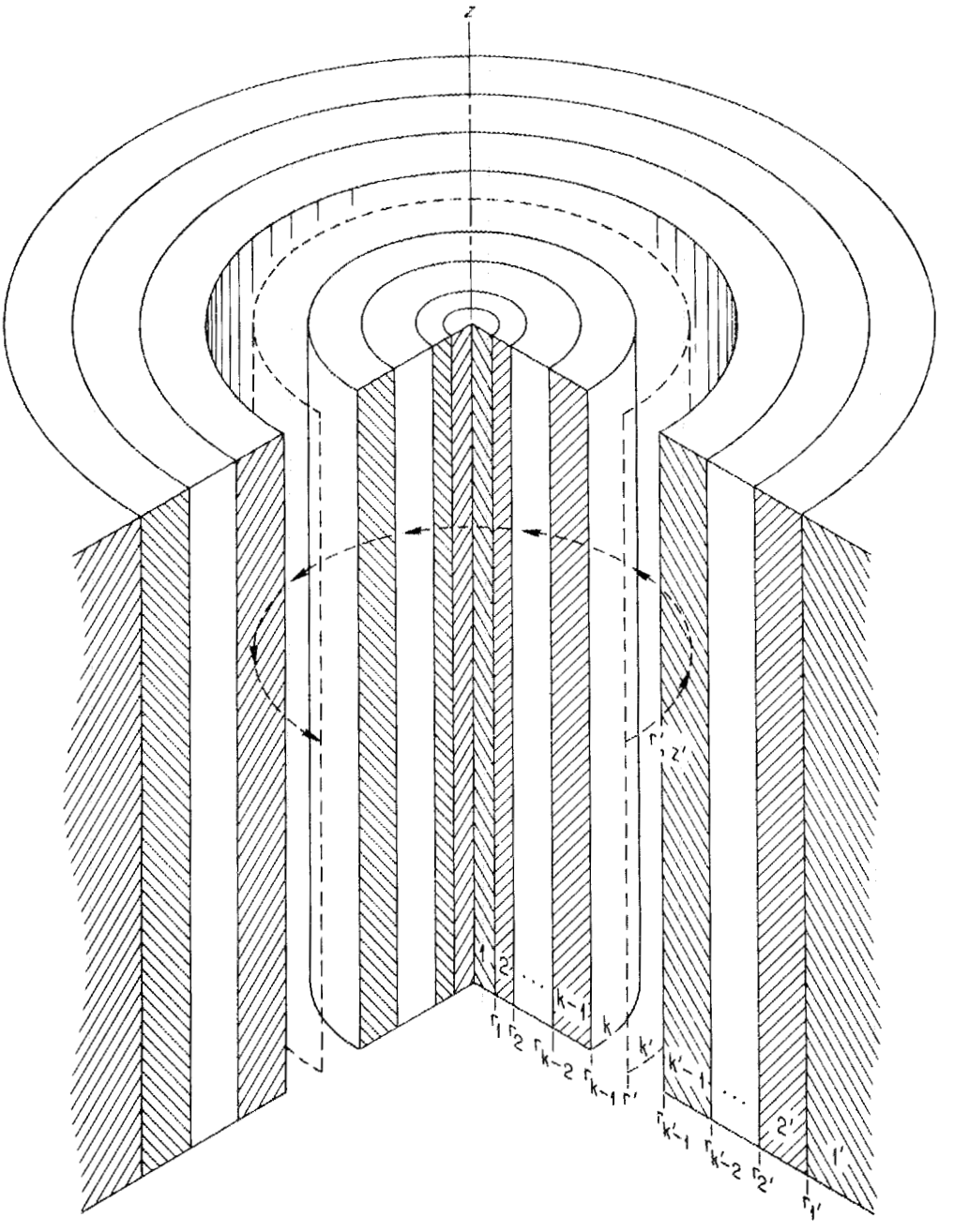

Fig. 1. Multiple cylindrical conductors encircling and encircled by a delta-function coil.

This differential equation has the following solution:

$$R(r) = C I_1(\alpha_n r) + D K_1(\alpha_n r) \ , \tag{9}$$

where $I_1(\alpha_n r)$ and $K_1(\alpha_n r)$ are modified Bessel functions of first order.

The complete solution for the Green's function in each region is an integral over the separation constant α:

$$G^{(n)}(r,z;r',z') = \int_0^\infty [C_n(\alpha) I_1(\alpha_n r) + D_n(\alpha) K_1(\alpha_n r)] \cos \alpha(z-z') d\alpha \ , \tag{10}$$

for n = 1,2, ... k; 1′,2′, ... k′. The unknown constants are functions of the separation constant α and different for each region. We shall use the boundary conditions to solve for these unknown constants. In order to obtain a very general solution for an arbitrary number of cylindrical conductors inside and outside the coil, we shall use a matrix technique.

In the innermost region the coefficient of $K_1(\alpha_1 r)$, $D_1(\alpha)$, must be zero, and in the outermost region C_1 must be zero in order for the solution to remain finite. (The outer radius of the outermost region is infinite.) We shall use the boundary conditions in order to determine the other constants. We have the following boundary conditions for the Green's function (which are the same as those for the vector potential) between regions n and n+1 shown in Fig. 2:

$$G^{(n)}(r_n,z;r',z') = G^{(n+1)}(r_n,z;r',z') \tag{11}$$

and

$$\frac{1}{\mu_n}\left[\frac{G^{(n)}}{r_n}(r_n,z;r',z') + \frac{\partial}{\partial r}\left[G^{(n)}(r,z;r',z')\right]_{r=r_n}\right]$$
$$= \frac{1}{\mu_{n+1}}\left[\frac{G^{(n+1)}}{r_n}(r_n,z;r',z') + \frac{\partial}{\partial r}\left[G^{(n+1)}(r,z;r',z')\right]_{r=r_n}\right] + \delta(z-z')\delta(r_n-r') \ . \tag{12}$$

Using the Green's functions from Eq. (10) in Eq. (12), we obtain:

$$\int_0^\infty C_n(\alpha)\frac{\alpha_n}{\mu_n}\left[\frac{I_1(\alpha_n r_n)}{\alpha_n r_n} + \frac{d}{d\alpha_n r_n} I_1(\alpha_n r_n)\right] + D_n(\alpha)\frac{\alpha_n}{\mu_n}\left[\frac{K_1(\alpha_n r_n)}{\alpha_n r_n} + \frac{d}{d\alpha_n r_n} K_1(\alpha_n r_n)\right] \cos \alpha(z-z') d\alpha$$
$$= \int_0^\infty C_{n+1}(\alpha)\frac{\alpha_{n+1}}{\mu_{n+1}}\left[\frac{I_1(\alpha_{n+1} r_n)}{\alpha_{n+1} r_n} + \frac{d}{d\alpha_{n+1} r_n} I_1(\alpha_{n+1} r_n)\right] + D_{n+1}(\alpha)\frac{\alpha_{n+1}}{\mu_{n+1}}\left[\frac{K_1(\alpha_{n+1} r_n)}{\alpha_{n+1} r_n}\right.$$
$$\left. + \frac{d}{d\alpha_{n+1} r_n} K_1(\alpha_{n+1} r_n)\right] \cos \alpha(z-z') d\alpha + \delta(z-z')\ \delta(r_n-r') \ . \tag{13}$$

We shall make use of the relations

$$\frac{1}{z} K_1(z) + \frac{d}{dz} K_1(z) = -K_0(z)$$

and

$$\frac{1}{z} I_1(z) + \frac{d}{dz} I_1(z) = I_0(z) \ , \tag{14}$$

and define

ORNL-DWG 72-3046

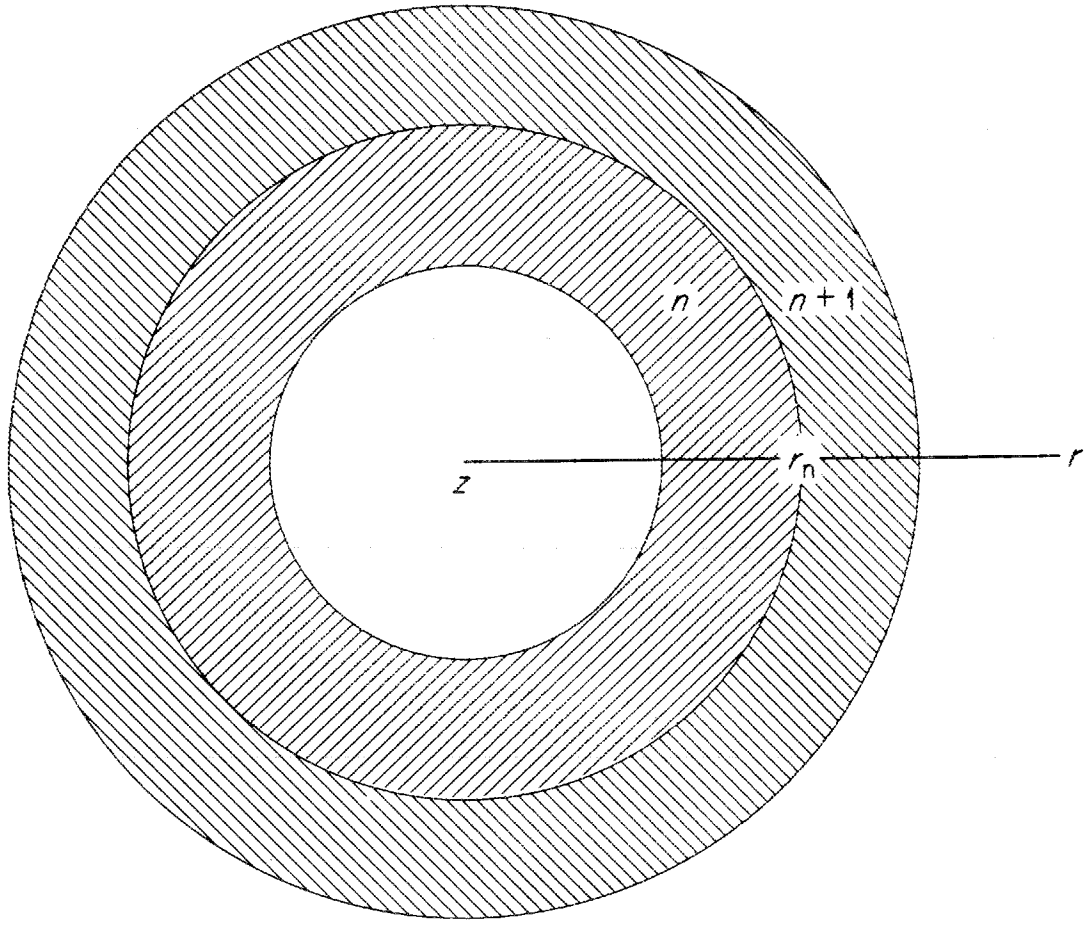

Fig. 2. Top view of a typical boundary between two regions.

$$\beta_n \equiv \left(\frac{\mu_0}{\mu_n}\right)\alpha_n = \frac{\mu_0}{\mu_n}\left(\alpha^2 + j\omega\mu_n\sigma_n - \omega^2\mu_n\epsilon_n\right)^{1/2} . \tag{15}$$

Making these simplifications and multiplying both sides of Eq. (13) by $\mu_0 \cos \alpha'(z-z')$ and integrating from minus to plus infinity gives:

$$\int_{-\infty}^{+\infty}\int_0^{\infty} \left\{C_n(\alpha)\beta_n I_0(\alpha_n r_n) - D_n(\alpha)\beta_n K_0(\alpha_n r_n)\right\} \cos \alpha(z-z') \cos \alpha'(z-z') d\alpha d(z-z')$$
$$= \int_{-\infty}^{+\infty}\int_0^{\infty} \left\{C_{n+1}(\alpha)\beta_{n+1} I_0(\alpha_{n+1} r_n) - D_{n+1}(\alpha)\beta_{n+1} K_0(\alpha_{n+1} r_n)\right\} \cos \alpha(z-z') \cos \alpha'(z-z') d\alpha d(z-z')$$
$$+ \mu_0 \int_{-\infty}^{\infty} \delta(z-z')\delta(r_n-r') \cos \alpha'(z-z') d(z-z') . \tag{16}$$

We can reverse the order of integration of the integrals containing Bessel functions and use the Fourier integral theorem:

$$\frac{1}{\pi}\int_0^{\infty} f(\alpha)\left\{\int_{-\infty}^{\infty} \cos \alpha(z-z') \cos \alpha'(z-z') d(z-z')\right\} d\alpha = f(\alpha') .$$

Equation (16) then becomes:

$$C_n\beta_n I_0(\alpha_n r_n) - D_n\beta_n K_0(\alpha_n r_n) = C_{n+1}\beta_{n+1} I_0(\alpha_{n+1} r_n) - D_{n+1}\beta_{n+1} K_0(\alpha_{n+1} r_n) + \frac{\mu_0}{\pi}\delta(r_n - r') . \tag{17}$$

A similar operation on Eq. (11) gives:

$$C_n I_1(\alpha_n r_n) + D_n K_1(\alpha_n r_n) = C_{n+1} I_1(\alpha_{n+1} r_n) + D_{n+1} K_1(\alpha_{n+1} r_n) . \tag{18}$$

Equations (17) and (18) represent the relations between the constants for any two regions inside the coil. We shall now solve for all the unknown constants in the following manner. Since the innermost region has only one unknown constant, C_1, we shall solve for the unknown constants in the second region in terms of it. Next we shall solve for the unknown constants in the third region in terms of C_1, then the fourth, until we reach the region containing the coil, k. We shall do the same thing for the regions outside the coil, starting with the outermost and working inward, solving for each region in terms of D_1', until we reach the region k′. We shall then use Eq. (17) and Eq. (18) for the coil regions k and k′. This will give two equations for the two unknowns, C_1 and D_1, and we can solve for them. This will then allow us to write the expression for the unknown constants in any region.

Solving Eqs. (17) and (18) for the unknown constants in any region, n+1, in terms of the unknown constants in region n, where the coil is not between the regions, gives:

$$C_{n+1} = \left(K_0(\alpha_{n+1} r_n) I_1(\alpha_n r_n) + \frac{\beta_n}{\beta_{n+1}} I_0(\alpha_n r_n) K_1(\alpha_{n+1} r_n)\right)\alpha_{n+1} r_n C_n$$
$$+ \left(K_0(\alpha_{n+1} r_n) K_1(\alpha_n r_n) - \frac{\beta_n}{\beta_{n+1}} K_0(\alpha_n r_n) K_1(\alpha_{n+1} r_n)\right)\alpha_{n+1} r_n D_n , \tag{19}$$

and

$$D_{n+1} = \left(I_0(\alpha_{n+1} r_n) I_1(\alpha_n r_n) - \frac{\beta_n}{\beta_{n+1}} I_0(\alpha_n r_n) I_1(\alpha_{n+1} r_n)\right)\alpha_{n+1} r_n C_n$$
$$+ \left(I_0(\alpha_{n+1} r_n) K_1(\alpha_n r_n) + \frac{\beta_n}{\beta_{n+1}} K_0(\alpha_n r_n) I_1(\alpha_{n+1} r_n)\right)\alpha_{n+1} r_n D_n . \tag{20}$$

The denominators have been simplified by use of the Wronskian relation:

$$\beta_{n+1}\left(I_0(\alpha_{n+1}r_n)K_1(\alpha_{n+1}) + I_1(\alpha_{n+1}r_n)K_0(\alpha_{n+1}r_n)\right) = \frac{\beta_{n+1}}{\alpha_{n+1}r_n} \quad .$$

We can write Eqs. (19) and (20) in matrix notation:

$$\underset{\sim}{a}_{n+1} = \underset{\sim}{T}_{n+1,n}\underset{\sim}{a}_n = \begin{bmatrix} C_{n+1} \\ D_{n+1} \end{bmatrix} = \begin{bmatrix} T_{11}(n+1,n) & T_{12}(n+1,n) \\ T_{21}(n+1,n) & T_{22}(n+1,n) \end{bmatrix} \begin{bmatrix} C_n \\ D_n \end{bmatrix} = \begin{bmatrix} T_{11}(n+1,n)C_n + T_{12}(n+1,n)D_n \\ T_{21}(n+1,n)C_n + T_{22}(n+1,n)D_n \end{bmatrix} . \quad (21)$$

The elements of the 2×2 transformation matrix, $T_{n+1,n}$, are simply the coefficients of C_n and D_n in Eqs. (19) and (20) and are

$$T_{11}(n+1,n) = \left(K_0(\alpha_{n+1}r_n)I_1(\alpha_n r_n) + \frac{\beta_n}{\beta_{n+1}} I_0(\alpha_n r_n)K_1(\alpha_{n+1}r_n)\right)\alpha_{n+1}r_n \ , \quad (22)$$

$$T_{12}(n+1,n) = \left(K_0(\alpha_{n+1}r_n)K_1(\alpha_n r_n) - \frac{\beta_n}{\beta_{n+1}} K_0(\alpha_n r_n)K_1(\alpha_{n+1}r_n)\right)\alpha_{n+1}r_n \ , \quad (23)$$

$$T_{21}(n+1,n) = \left(I_0(\alpha_{n+1}r_n)I_1(\alpha_n r_n) - \frac{\beta_n}{\beta_{n+1}} I_0(\alpha_n r_n)I_1(\alpha_{n+1}r_n)\right)\alpha_{n+1}r_n \ , \quad (24)$$

and

$$T_{22}(n+1,n) = \left(I_0(\alpha_{n+1}r_n)K_1(\alpha_n r_n) + \frac{\beta_n}{\beta_{n+1}} K_0(\alpha_n r_n)I_1(\alpha_{n+1}r_n)\right)\alpha_{n+1}r_n \ . \quad (25)$$

This transformation matrix gives the relation between the constants in any two regions not containing the coil between them. It is the same for regions inside and outside the coil, with the exception that n should be replaced by n′ for regions outside the coil to correspond to our notation.

Starting from the innermost region (n=1) and going to the second gives:

$$\underset{\sim}{a}_2 = \underset{\sim}{T}_{2,1}\underset{\sim}{a}_1 = \underset{\sim}{T}_{2,1}\begin{bmatrix} C_1 \\ 0 \end{bmatrix} . \quad (26)$$

The constants in the third region can be obtained by:

$$\underset{\sim}{a}_3 = \underset{\sim}{T}_{3,2}\underset{\sim}{a}_2 = \underset{\sim}{T}_{3,2}\underset{\sim}{T}_{2,1}\underset{\sim}{a}_1 \ , \quad (27)$$

and the constants in the fourth region by:

$$\underset{\sim}{a}_4 = \underset{\sim}{T}_{4,3}\underset{\sim}{a}_3 = \underset{\sim}{T}_{4,3}\underset{\sim}{T}_{3,2}\underset{\sim}{T}_{2,1}\underset{\sim}{a}_1 \ . \quad (28)$$

The general expression for the nth region is

$$\underset{\sim}{a}_n = \underset{\sim}{T}_{n,n-1}\underset{\sim}{T}_{n-1,n-2} \ \dots \ \underset{\sim}{T}_{3,2}\underset{\sim}{T}_{2,1}\underset{\sim}{a}_1 \ . \quad (29)$$

To make our expressions shorter, we shall define:

$$\underset{\sim}{V}(n) \equiv \underset{\sim}{T}_{n,n-1}\underset{\sim}{T}_{n-1,n-2} \ \dots \ \underset{\sim}{T}_{3,2}\underset{\sim}{T}_{2,1} \ , \quad (30)$$

and when n = k we shall drop the argument. Thus we have

$$\underset{\sim}{a}_n = \underset{\sim}{V}(n)\underset{\sim}{a}_1 \text{ and } \underset{\sim}{a}_k = \underset{\sim}{V}\underset{\sim}{a}_1 = \underset{\sim}{V}\begin{bmatrix} C_1 \\ 0 \end{bmatrix}. \tag{31}$$

We have very similar equations for the regions outside the coil:

$$\underset{\sim}{a}_{2'} = \underset{\sim}{T}_{2',1'}\underset{\sim}{a}_{1'} = \underset{\sim}{T}_{2',1'}\begin{bmatrix} 0 \\ D_{1'} \end{bmatrix} , \tag{32}$$

$$\underset{\sim}{a}_{n'} = \underset{\sim}{U}(n')\underset{\sim}{a}_{1'} \text{ and } \underset{\sim}{a}_{k'} = \underset{\sim}{U}\underset{\sim}{a}_{1'} = \underset{\sim}{U}\begin{bmatrix} 0 \\ D_{1'} \end{bmatrix} , \tag{33}$$

where we have made a similar definition:

$$\underset{\sim}{U}(n') \equiv \underset{\sim}{T}_{n',n'-1}\underset{\sim}{T}_{n'-1,n'-2} \ldots \underset{\sim}{T}_{3',2'}\underset{\sim}{T}_{2',1'} , \tag{34}$$

and we have dropped the argument when n′ = k′. Thus, we can now write the constants in any region in terms of the constant in the innermost region,

$$\underset{\sim}{a}_1 = \begin{bmatrix} C_1 \\ 0 \end{bmatrix} = \begin{bmatrix} 1 \\ 0 \end{bmatrix} C_1 ,$$

or the outermost region,

$$\underset{\sim}{a}_{1'} = \begin{bmatrix} 0 \\ D_{1'} \end{bmatrix} = \begin{bmatrix} 0 \\ 1 \end{bmatrix} D_{1'} ,$$

by means of the transformation matrices, $\underset{\sim}{V}(n)$ and $\underset{\sim}{U}(n)$. We shall write Eqs. (17) and (18) for the regions on either side of the coil, k and k′. Here we have $r_n = r'$, so that $\delta(r_n - r') = 1$. Also, $\alpha_k = \alpha_{k'} = \alpha_0$ and $\beta_k = \beta_{k'} = \beta_0$, so that the equations become:

$$C_k\beta_0 I_0(\alpha_0 r') - D_k\beta_0 K_0(\alpha_0 r') = C_{k'}\beta_0 I_0(\alpha_0 r') - D_{k'}\beta_0 K_0(\alpha_0 r') + \frac{\mu_0}{\pi} , \tag{35}$$

and

$$C_k I_1(\alpha_0 r') + D_k K_1(\alpha_0 r') = C_{k'} I_1(\alpha_0 r') + D_{k'} K_1(\alpha_0 r') . \tag{36}$$

Using our matrix notation, we can write

$$C_k = |\underset{\sim}{a}_k|_1 = \sum_{j=1}^{2} V_{1j}\, |\underset{\sim}{a}_1|_j = V_{11}C_1 , \tag{37}$$

$$D_k = V_{21}C_1 , \tag{38}$$

$$C_{k'} = U_{12}D_{l'} \ , \tag{39}$$

and

$$D_{k'} = U_{22}D_{l'} \ . \tag{40}$$

Thus, by writing the constants in Eqs. (35) and (36) in terms of C_1 and $D_{l'}$, we can get:

$$C_1\left[V_{11}I_0(\alpha_0 r') - V_{21}K_0(\alpha_0 r')\right] = D_{l'}\left[U_{12}I_0(\alpha_0 r') - U_{22}K_0(\alpha_0 r')\right] + \frac{\mu_0}{\beta_0 \pi} \tag{41}$$

and

$$C_1\left[V_{11}I_1(\alpha_0 r') + V_{21}K_1(\alpha_0 r')\right] = D_{l'}\left[U_{12}I_1(\alpha_0 r') + U_{22}K_1(\alpha_0 r')\right] \ . \tag{42}$$

We now have two equations and only two unknowns. Solving these gives

$$C_1 = \frac{\left[U_{12}I_1(\alpha_0 r') + U_{22}K_1(\alpha_0 r')\right]}{U_{22}V_{11} - U_{12}V_{21}} \ \frac{\mu_0 r'}{\pi} \tag{43}$$

and

$$D_{l'} = \frac{\left[V_{11}I_1(\alpha_0 r') + V_{21}K_1(\alpha_0 r')\right]}{U_{22}V_{11} - U_{12}V_{21}} \ \frac{\mu_0 r'}{\pi} \ , \tag{44}$$

where the denominator has again been simplified by use of the Wronskian and the fact that $\beta_0 = \alpha_0$. Now we can substitute the values of the constants in Eqs. (43) and (44) into Eqs. (31) and (33) to give the constants in any region. We can write the Green's function for any region inside the coil as

$$G^{(n)}(r,z;r',z') =$$

$$\frac{\mu_0 r'}{\pi}\int_0^\infty \frac{\left[V_{11}(n)I_1(\alpha_n r) + V_{21}(n)K_1(\alpha_n r)\right]\left[U_{12}I_1(\alpha_0 r') + U_{22}K_1(\alpha_0 r')\right]}{\left[U_{22}V_{11} - U_{12}V_{21}\right]} \cos\alpha(z-z')d\alpha \ . \tag{45}$$

The Green's function for any region outside the coil is

$$G^{(n')}(r,z;r',z') =$$

$$\frac{\mu_0 r'}{\pi}\int_0^\infty \frac{\left[U_{12}(n')I_1(\alpha_{n'} r) + U_{22}(n')K_1(\alpha_{n'} r)\right]\left[V_{11}I_1(\alpha_0 r') + V_{21}K_1(\alpha_0 r')\right]}{\left[U_{22}V_{11} - U_{12}V_{21}\right]} \cos\alpha(z-z')d\alpha \ . \tag{46}$$

Once we have the Green's function, we can get the vector potential by using Eq. (3). The most common type of coil is one of rectangular cross section, as shown in Fig. 3. We added another region, that contains the coil, and designated it region c. For a densely and uniformly wound coil, the current density $J(r'z')$ is approximately:

$$J(r',z') = n_c I \,, \tag{47}$$

where n_c is the number of turns per unit area, and I is the current per turn. Substituting Eqs. (47) and (45) into Eq. (3) gives the vector potential for any region inside the coil as

$$A^{(n)}(r,z) = n_c I \int_{l_1}^{l_2} \int_{r_1}^{r_2} G^{(n)}(r,z;r',z')dr'dz' \,. \tag{48}$$

Reversing the order of integration and integrating over the dimensions of the coil gives

$$A^{(n)}(r,z) = \frac{n_c I \mu_0}{\pi} \int_0^\infty \frac{\left[\sin\ \alpha(z-l_1) - \sin\ \alpha(z-l_2)\right]\left[V_{11}(n)I_1(\alpha_n r) + V_{21}(n)K_1(\alpha_n r)\right]}{\alpha\alpha_0^2(U_{22}V_{11} - U_{12}V_{21})}$$

$$\times \left[U_{12}I(r_2,r_1) + U_{22}K(r_2,r_1)\right]d\alpha \,, \tag{49}$$

where we have defined the functions

$$\int_{r'=r_1}^{r_2} r'I_1(\alpha_0 r')dr' = \frac{1}{\alpha_0^2}\int_{\alpha_0 r'=\alpha_0 r_1}^{\alpha_0 r_2} \alpha_0 r' I_1(\alpha_0 r')d\alpha_0 r' = \frac{1}{\alpha_0^2}\int_{x=\alpha_0 r_1}^{\alpha_0 r_2} xI_1(x)dx \equiv \frac{1}{\alpha_0^2} I(r_2,r_1) \tag{50}$$

and

$$\int_{r_1}^{r_2} r'K_1(\alpha_0 r')dr' \equiv \frac{1}{\alpha_0^2} K(r_2,r_1) \,, \tag{51}$$

where r_1 and r_2 are now taken as the coil inner and outer radii, and should not be confused with the outer radii of the first two regions. The vector potential for any region outside the coil is

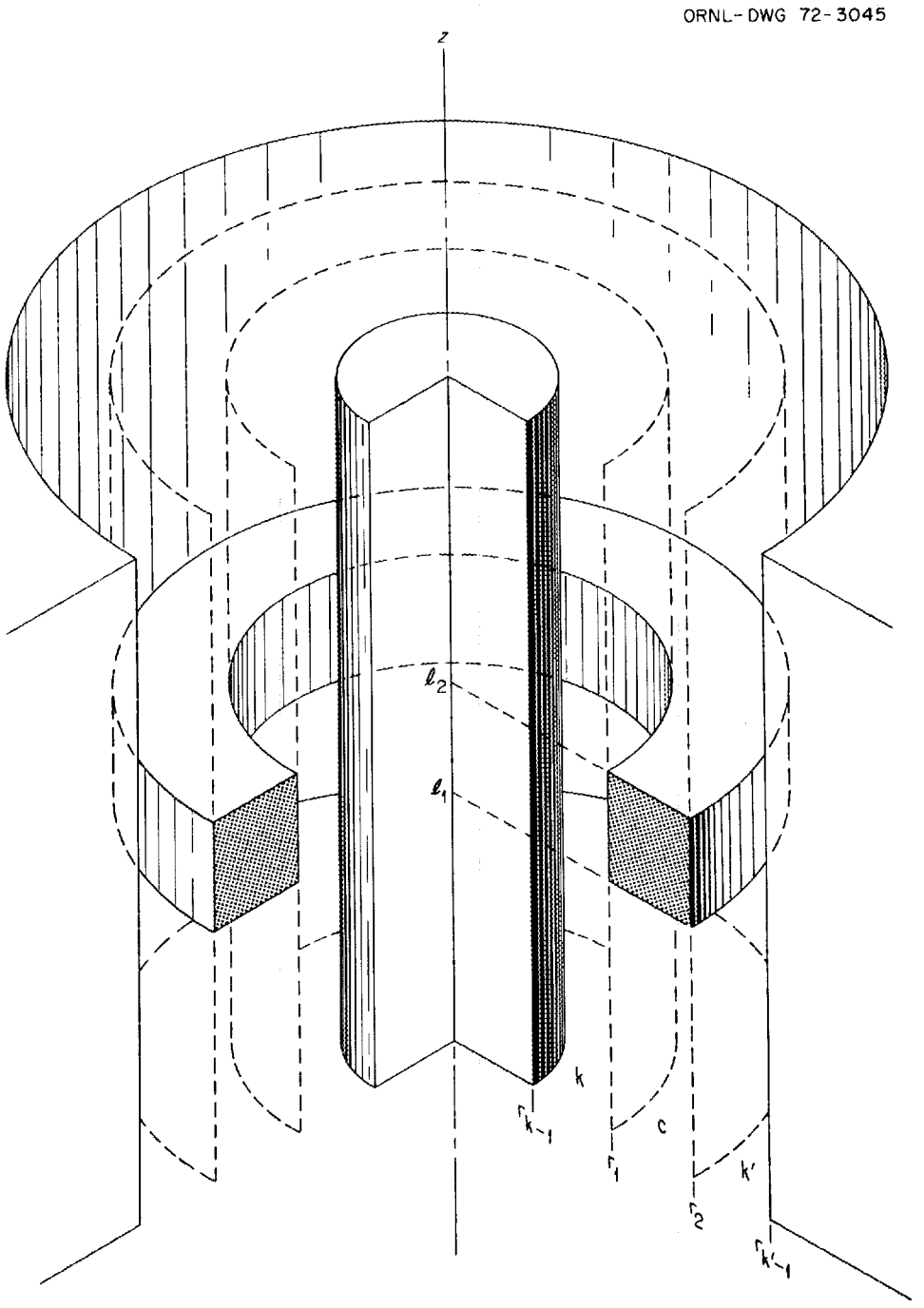

Fig. 3. Single coil (or identical, intermeshed coils) with multiple cylindrical conductors.

$$A^{(n')}(r,z) = \frac{n_c I \mu_0}{\pi} \int_0^\infty \frac{[\sin\alpha(z-l_1)-\sin\alpha(z-l_2)]\,[U_{12}(n')I_1(\alpha_{n'}r)+U_{22}(n')K_1(\alpha_{n'}r)]}{\alpha\alpha_0^2(U_{22}V_{11}-U_{12}V_{21})}$$

$$\times\ [V_{11}I(r_2,r_1) + V_{21}K(r_2,r_1)]d\alpha\ . \tag{52}$$

The region of the coil requires special treatment. To find the vector potential at a point in the coil region, r, we must add the solution of $A^{(k)}(r,z)$ for a coil going from r to r_2 to the solution of $A^{(k)}(r,z)$ for a coil going from r_1 to r. The results are

$$A(c) = \frac{n_c I \mu_0}{\pi} \int_0^\infty \frac{[\sin\alpha(z-l_1) - \sin\alpha(z-l_2)]}{\alpha(U_{22}V_{11} - U_{12}V_{21})}$$

$$\times \left\{ \int_{r_1}^{r} [U_{12}I_1(\alpha_0 r) + U_{22}K_1(\alpha_0 r)][V_{11}I_1(\alpha_0 r') + V_{21}K_1(\alpha_0 r')]\,r'dr' \right.$$

$$\left. + \int_{r}^{r_2} [V_{11}I_1(\alpha_0 r) + V_{21}K_1(\alpha_0 r)][U_{12}I_1(\alpha_0 r') + U_{22}K_1(\alpha_0 r')]\,r'dr' \right\} d\alpha$$

$$= \frac{n_c I \mu_0}{\pi} \int_0^\infty \frac{[\sin\alpha(z-l_1) - \sin\alpha(z-l_2)]}{\alpha(U_{22}V_{11} - U_{12}V_{21})}$$

$$\times \left\{ \int_{r_1}^{r_2} U_{12}V_{11}I_1(\alpha_0 r)I_1(\alpha_0 r')r'dr' + \int_{r_1}^{r_2} U_{22}V_{21}K_1(\alpha_0 r)K_1(\alpha_0 r')r'dr' \right.$$

$$+ U_{12}V_{21}\left[I_1(\alpha_0 r) \int_{r_1}^{r} K_1(\alpha_0 r')r'dr' + K_1(\alpha_0 r) \int_{r}^{r_2} I_1(\alpha_0 r')r'dr'\right]$$

$$\left. + U_{22}V_{11}\left[\int_{r_1}^{r} K_1(\alpha_0 r)I_1(\alpha_0 r')r'dr' + \int_{r}^{r_2} I_1(\alpha_0 r)K_1(\alpha_0 r')r'dr'\right]\right\} d\alpha\ . \tag{53}$$

We shall use the definitions given in Eqs. (50) and (51) for $I(r_2,r_1)$ and $K(r_2,r_1)$, and we shall use the relations

$$\int_{r_1}^{r} K_1(\alpha_0 r')r'dr' = \frac{1}{\alpha_0^2}\ K(r_2,r_1) - \int_{r}^{r_2} K_1(\alpha_0 r')r'dr'$$

and

$$\int_{r}^{r_2} I_1(\alpha_0 r)K_1(\alpha_0 r')r'dr' = \frac{1}{\alpha_0^2}\, I(r_2,r_1) - \int_{r_1}^{r} I_1(\alpha_0 r')r'dr' \ .$$

Equation (53) then becomes

$$A^{(c)}(r,z) = \frac{n_c I\mu_0}{\pi}\int_0^\infty \Bigg\{ \frac{[\sin\alpha(z-l_1) - \sin\alpha(z-l_2)]}{\alpha\alpha_0^2(U_{22}V_{11} - U_{12}V_{21})}$$

$$\times\ [U_{12}V_{11}I_1(\alpha_0 r)I(r_2,r_1) + U_{22}V_{21}K_1(\alpha_0 r)K(r_2,r_1)$$

$$+\ U_{12}V_{21}I_1(\alpha_0 r)K(r_2,r_1) + U_{12}V_{21}K_1(\alpha_0 r)I(r_2,r_1)]$$

$$+\ \Bigg[\frac{[\sin\alpha(z-l_1) - \sin\alpha(z-l_2)]}{\alpha}\Bigg[\int_{r_1}^{r} K_1(\alpha_0 r)I_1(\alpha_0 r')r'dr'$$

$$+\ \int_{r}^{r_2} I_1(\alpha_0 r)K_1(\alpha_0 r')r'dr'\Bigg]\Bigg]\Bigg\}\ d\alpha \ . \tag{54}$$

If we take the case of a coil in air with no metal present, we have $U = V = 1$, the unit matrix, so that $U_{ij} = V_{ij} = \delta_{ij}$. Then Eq. (54) reduces to

$$A^{(c)}(r,z) = \frac{n_c I\mu_0}{\pi}\int_0^\infty \Bigg\{\frac{[\sin\alpha(z-l_1) - \sin\alpha(z-l_2)]}{\alpha}\Bigg[\int_{r_1}^{r} K_1(\alpha_0 r)I_1(\alpha_0 r')r'dr'$$

$$+\ \int_{r}^{r_2} I_1(\alpha_0 r)K_1(\alpha_0 r')r'dr'\Bigg]\Bigg\}\ d\alpha \ . \tag{55}$$

In an earlier paper,[4] we have taken the separation "constant," α^2, to be positive and derived the following three expressions for the vector potential above, below and in a coil with no conductors present.

$$A^{(above)}(r,z) = \frac{n_c I \mu_0}{2} \int_0^\infty \frac{1}{\alpha_0^2 \alpha} J(r_2,r_1) J_1(\alpha r) \left[e^{-\alpha_0(z-l_2)} - e^{-\alpha_0(z-l_1)} \right] d\alpha \tag{56}$$

$$A^{(below)}(r,z) = \frac{n_c I \mu_0}{2} \int_0^\infty \frac{1}{\alpha_0^2 \alpha} J(r_2,r_1) J_1(\alpha r) \left[e^{-\alpha_0(l_1-z)} - e^{-\alpha_0(l_2-z)} \right] d\alpha \tag{57}$$

$$A^{(in)}(r,z) = \frac{n_c I \mu_0}{2} \int_0^\infty \frac{1}{\alpha_0^2 \alpha} J(r_2,r_1) J_1(\alpha r) \left[2 - e^{\alpha_0(z-l_2)} - e^{-\alpha_0(z-l_1)} \right] d\alpha \,, \tag{58}$$

where

$$\frac{1}{\alpha^2} J(r_2,r_1) \equiv \int_{r_1}^{r_2} r J_1(\alpha r) dr \,.$$

Since the vector potential does not depend on how we choose our separation constant, when in the coil region we can equate Eq. (55) to Eq. (56), (57) or (58), depending on the value of z.

The correct equation (56, 57 or 58) can be substituted in Eq. (54) for the term in the large square brackets. For instance, the vector potential inside the coil (that is, $l_1 < z < l_2$) and in the coil region is:

$$A^{(ci)}(r,z) = \frac{n_c I \mu_0}{\pi} \int_0^\infty \Bigg\{ \frac{[\sin \alpha(z-l_1) - \sin \alpha(z-l_2)]}{\alpha \alpha_0^2}$$

$$\times \frac{[U_{12}V_{11}I_1(\alpha_0 r)I(r_2,r_1) + U_{22}V_{21}K_1(\alpha_0 r)K(r_2,r_1) + U_{12}V_{21}(I_1(\alpha_0 r)K(r_2,r_1) + K_1(\alpha_0 r)I(r_2,r_1))]}{(U_{22}V_{11} - U_{12}V_{21})}$$

$$+ \frac{\pi}{2\alpha_0^2 \alpha} J(r_2,r_1) J_1(\alpha r) \left[2 - e^{\alpha_0(z-l_2)} - e^{-\alpha_0(z-l_1)} \right] \Bigg\} d\alpha \,. \tag{59}$$

The vector potential in the coil region above the coil is:

$$A^{(ca)}(r,z) = \frac{n_c I \mu_0}{\pi} \int_0^\infty \Bigg\{ \frac{[\sin \alpha(z-l_1) - \sin a(z-l_2)]}{\alpha \alpha_0^2}$$

$$\times \frac{[U_{12}V_{11}I_1(\alpha_0 r)I(r_2,r_1) + U_{22}V_{21}K_1(\alpha_0 r)K(r_2,r_1) + U_{12}V_{21}(I_1(\alpha_0 r)K(r_2,r_1) + K_1(\alpha_0 r)I(r_2,r_1))]}{(U_{22}V_{11} - U_{12}V_{21})}$$

$$+ \frac{\pi}{2\alpha \alpha_0^2} J(r_2,r_1) J_1(\alpha r) \left[e^{-\alpha_0(z-l_2)} - e^{-\alpha_0(z-l_1)} \right] \Bigg\} d\alpha \,. \tag{60}$$

The vector potential in the coil region below the coil is:

$$A^{(cb)}(r,z) = \frac{n_c I \mu_0}{\pi} \int_0^\infty \left\{ \frac{[\sin\alpha(z-l_1) - \sin\alpha(z-l_2)]}{\alpha\alpha_0^2} \right.$$

$$\times \frac{[U_{12}V_{11}I_1(\alpha_0 r)I(r_2,r_1)+U_{22}V_{21}K_1(\alpha_0 r)K(r_2,r_1)+U_{12}V_{21}(I_1(\alpha_0 r)K(r_2,r_1)+K_1(\alpha_0 r)I(r_2,r_1))]}{(U_{22}V_{11} - U_{12}V_{21})}$$

$$\left. + \frac{\pi}{2\alpha\alpha_0^2} J(r_2,r_1)J_1(\alpha r)\left[e^{-\alpha_0(l_1-z)} - e^{-\alpha_0(l_2-z)}\right] \right\} d\alpha \ . \tag{61}$$

We have now determined the vector potential for any region. Once the vector potential has been determined, we can calculate any physically observable electromagnetic induction phenomenon from it.

CALCULATION OF INDUCTION PHENOMENA

We shall now apply these equations for the vector potential to calculate some induction properties of single and multiple coils. These properties include mutual and self-impedance, the effects of defects and the induction heating inside a conductor. The coil and conductor configuration is shown in Fig. 4.

We have added a second coil in the region k, with inner and outer radii, r_3 and r_4, and with top and bottom at l_4 and l_3.

Mutual Impedance

We shall first calculate the mutual impedance between the two coils in the presence of the conductors. The mutual impedance between the two coils, 1 and 2, is the voltage induced in one coil by a unit current in the other.

$$j\omega M_{12} = \frac{V(2)}{I(1)} \text{ or } M_{12} = \frac{V(2)}{j\omega I(1)} = M_{21} \ , \tag{62}$$

where we can calculate V(2) by

$$V(2) = -\sum_{i=1}^{n_2} \vec{E}_t \cdot \vec{dl} = j\omega 2\pi \sum_{i=1}^{n_2} r_i A_i(1) \ , \tag{63}$$

where $A_i(1)$ is the vector potential at each turn in Coil 2 due to the current I(1) in Coil 1, and n_2 is the total number of turns in Coil 2.

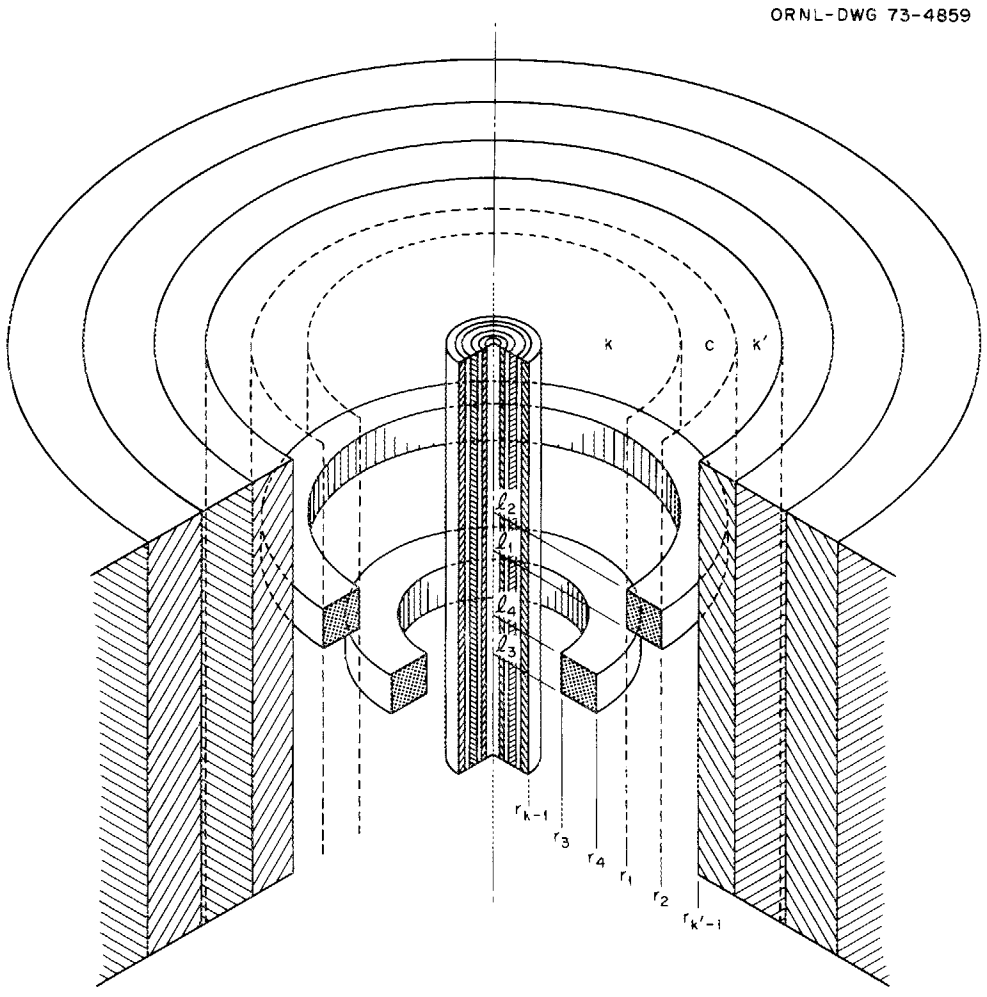

Fig. 4. Multiple cylindrical conductors encircling and encircled by two disjoint coils.

$$V(2) = j\omega 2\pi[r_1A_1 + r_2A_2 + r_3A_3 + \dots r_{n_2}A_{n_2}] = j\omega 2\pi n_2 \overline{rA} , \tag{64}$$

where $\overline{rA}$ is the average value of rA over the turns, or

$$\overline{rA} = \frac{1}{n_2} \sum_{i=1}^{n_2} r_iA_i .$$

If the turns are distributed uniformly over the cross section of the coil, then

$$\overline{rA} = \frac{1}{[\text{Coil Cross-sectional Area}]} \iint_{\text{Area}} rAdrdz .$$

Then we can write for the induced voltage

$$V(2) = j\omega 2\pi \frac{n_2}{(l_4-l_3)(r_4-r_3)} \int_{l_3}^{l_4}\int_{r_3}^{r_4} A(1)rdrdz , \tag{65}$$

and for the mutual impedance

$$j\omega M_{12} = \frac{j\omega 2\pi n_2}{I(1)(l_4-l_3)(r_4-r_3)} \int_{l_3}^{l_4}\int_{r_3}^{r_4} A(1)rdrdz . \tag{66}$$

Substituting in for the vector potential at Coil 2 by a current in Coil 1, as given by Eq. (49), and performing the integration over the dimensions of Coil 2 gives

$$j\omega M_{12} = \frac{j\omega 2n_1n_2\mu_0}{(l_4-l_3)(r_4-r_3)(l_2-l_1)(r_2-r_1)} \int_0^\infty \left\{ \frac{[\cos\alpha(l_4-l_2)+\cos\alpha(l_3-l_1)-\cos\alpha(l_4-l_1)-\cos\alpha(l_3-l_2)]}{\alpha^2\alpha_0^4} \right.$$

$$\left. \times \frac{[V_{11}I(r_4,r_3)+V_{21}K(r_4,r_3)][U_{12}I(r_2,r_1)+U_{22}K(r_2,r_1)]}{(U_{22}V_{11}-U_{12}V_{21})} \right\} d\alpha , \tag{67}$$

where n_1 is the total number of turns on Coil 1. We get an identical equation if we reverse the position of the coils; it is not important which is called Number 1 or 2.

When performing numerical integrations, it is frequently convenient and desirable to normalize dimensions. For our calculations, we have normalized by dividing all lengths by $\bar{r}$ and multiplying all α's and β's by $\bar{r}$, where $\bar{r}$ is the mean radius of the driver coil. This has the effect of making everything inside the integrand dimensionless. The parameter α_n becomes:

$$\begin{aligned}\alpha_n &= \left(\alpha^2\bar{r}^2 + j\omega\mu_n\sigma_n\bar{r}^2 - \omega^2\mu_n\epsilon_n\bar{r}^2\right)^{1/2} \\ &= \left(\alpha'^2 + j\omega\mu_n\sigma_n\bar{r}^2 - \omega^2\mu_n\epsilon_n\bar{r}^2\right)^{1/2} \quad .\end{aligned} \tag{68}$$

For purposes of calculation we shall drop the third term, which is very small, below optical frequencies. The term $\omega\mu_n\sigma_n\bar{r}^2$ and all other terms in the integrand of the equations are dimensionless. There is a slight modification in the constants in front of the integral equations upon normalization.

For all the mutual impedances we have the form:

$$j\omega M_{12} = \frac{j2\omega n_1 n_2 \mu_0 \bar{r}}{(l_4-l_3)(r_4-r_3)(l_2-l_1)(r_2-r_1)} \int_0^\infty \ldots d\alpha \ . \tag{69}$$

The integrand does not change in appearance, but we are now considering all length dimensions in the equation normalized (other than $\bar{r}$). If we consider the special case where no conductors are outside the coils, we have $\underset{\sim}{U} = \underline{1}$, the unit matrix. Then $U_{22} = 1$ and $U_{12} = 0$, so that Eq. (67) for the mutual impedance becomes

$$\begin{aligned} j\omega M_{12} = \frac{j\omega 2 n_1 n_2 \mu_0 \bar{r}}{(l_4-l_3)(r_4-r_3)(l_2-l_1)(r_2-r_1)} \int_0^\infty \Bigg\{ & \frac{[\cos\alpha(l_4-l_2)+\cos\alpha(l_3-l_1)-\cos\alpha(l_4-l_1)-\cos\alpha(l_3-l_2)]}{\alpha^2\alpha_0^4} \\ & \times \left[I(r_4,r_3) + \frac{V_{21}}{V_{11}} K(r_4,r_3)\right] K(r_2,r_1)\Bigg\} \, d\alpha \ . \end{aligned} \tag{70}$$

If we now consider the special case of no conductors inside the coil, $\underset{\sim}{V} = \underline{1}$, $V_{11} = 1$ and $V_{12} = 0$. Eq. (67) then reduces to:

$$\begin{aligned} j\omega M_{12} = \frac{j\omega 2 n_1 n_2 \mu_0 \bar{r}}{(l_4-l_3)(r_4-r_3)(l_2-l_1)(r_2-r_1)} \int_0^\infty & \frac{[\cos\alpha(l_4-l_2)+\cos\alpha(l_3-l_1)-\cos\alpha(l_4-l_1)-\cos\alpha(l_3-l_2)]}{\alpha^2\alpha_0^4} \\ & \times \left[\frac{U_{12}}{U_{22}} I(r_2,r_1) + K(r_2,r_1)\right] I(r_4,r_3)\, d\alpha \ . \end{aligned} \tag{71}$$

Pickup Coils in Region C

Thus far, we have been considering one coil in the coil region c, and the other coil in region k. The answers will also be the same if we place the second coil in region k′, and additional coils can also be added to the equation.

Now, however, consider the case where both coils are in the coil region c, as shown in Fig. 5. We shall take the coil with the greatest radial thickness as the No. 1 coil and the other coil as the No. 2 coil.

ORNL-DWG 73-4858

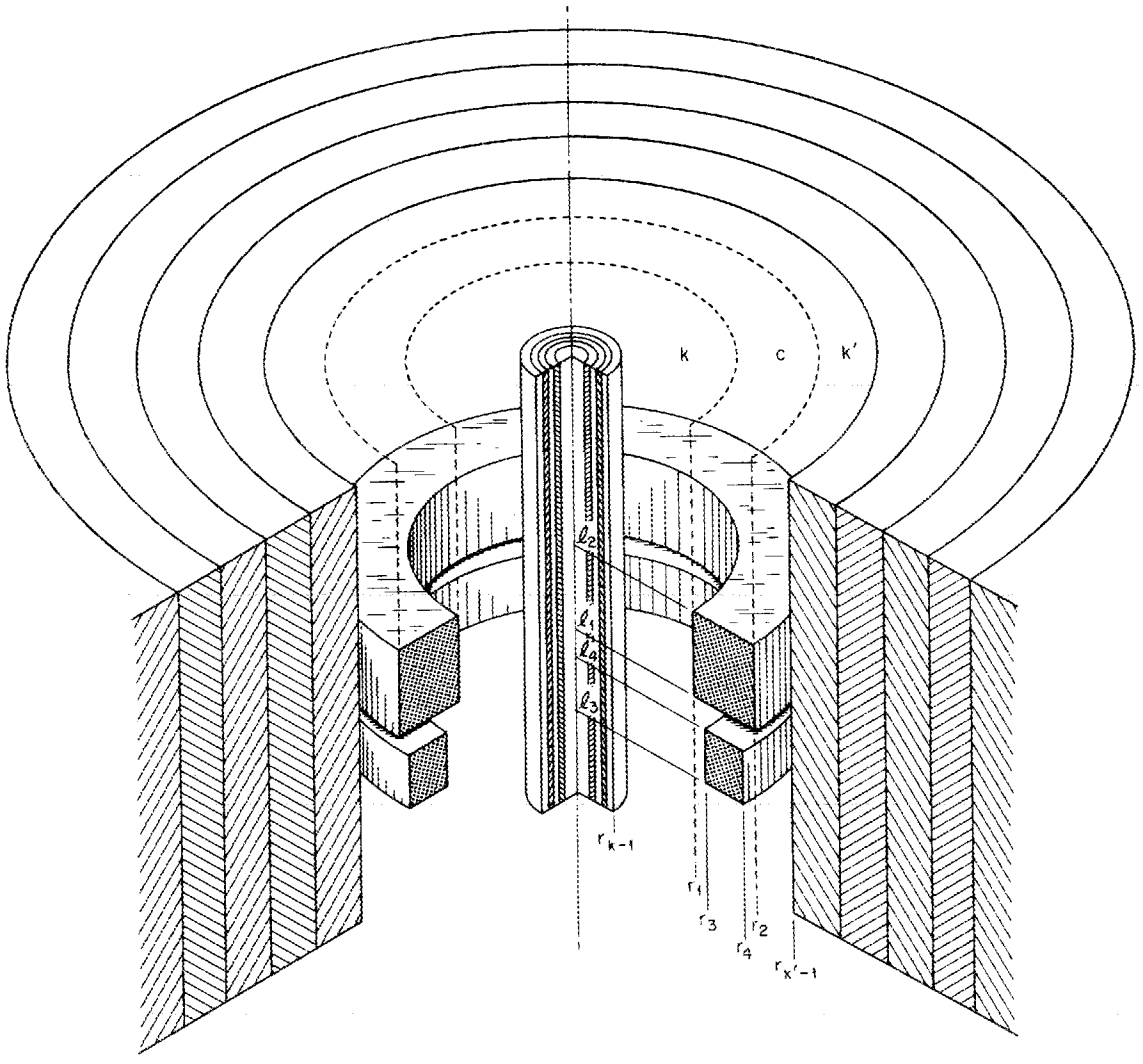

Fig. 5. Multiple cylindrical conductors encircling and encircled by two coils in the same radial region.

Substitution of Eq. (61) into (66) and performing the integration gives for the mutual impedance:

$$j\omega M_{12} = \frac{j\omega 2 n_1 n_2 \mu_0 \bar{r}}{(l_4-l_3)(r_4-r_3)(l_2-l_1)(r_2-r_1)} \int_0^\infty \left\{ \frac{[\cos\alpha(l_4-l_2)+\cos\alpha(l_3-l_1)-\cos\alpha(l_4-l_1)-\cos\alpha(l_3-l_2)]}{\alpha^2\alpha_0^4} \right.$$

$$\times \left[\frac{U_{12}V_{11}I(r_4,r_3)I(r_2,r_1)+U_{22}V_{21}K(r_4,r_3)K(r_2,r_1)+U_{12}V_{21}(I(r_4,r_3)K(r_2,r_1)+K(r_4,r_3)I(r_2,r_1))}{(U_{22}V_{11}-U_{12}V_{21})} \right]$$

$$\left. + \frac{\pi}{2\alpha_0^3\alpha^3} J(r_4,r_3)J(r_2,r_1)\left[e^{-\alpha_0(l_1-l_4)} + e^{-\alpha_0(l_2-l_3)} - e^{-\alpha_0(l_1-l_3)} - e^{-\alpha_0(l_2-l_4)}\right] \right\} d\alpha \quad . \tag{72}$$

The term containing the elements of the $\underset{\sim}{U}$ and $\underset{\sim}{V}$ matrices will reduce considerably if there are no conductors outside the coil. For no conductors outside, it becomes:

$$\left[\frac{V_{21}}{V_{11}} K(r_4,r_3)K(r_2,r_1) \right] \quad . \tag{73}$$

On the other hand, if there are no conductors inside the coil, it becomes:

$$\left[\frac{U_{12}}{U_{22}} I(r_4,r_3)I(r_2,r_1) \right] \quad . \tag{74}$$

If we move the second coil up so that it is inside the first coil (the windings are intermeshed), the equation is the same except that the last term in square brackets becomes:

$$\left[2\alpha_0(l_4-l_3) + e^{\alpha_0(l_3-l_2)} + e^{-\alpha_0(l_4-l_1)} - e^{\alpha_0(l_4-l_2)} - e^{-\alpha_0(l_3-l_1)} \right] \quad . \tag{75}$$

If we make the two coils identical in size, shape, and number of turns we have, both for the mutual impedance and the self-impedance:

$$Z = j\omega M_{12} = \frac{j2\omega n_1^2 \mu_0 \bar{r}}{(l_2-l_1)^2(r_2-r_1)^2} \int_0^\infty \left\{ \frac{2[1-\cos\alpha(l_2-l_1)]}{\alpha^2\alpha_0^4} \right.$$

$$\times \left[\frac{U_{12}V_{11}I^2(r_2,r_1)+U_{22}V_{21}K^2(r_2,r_1)+2U_{12}V_{21}I(r_2,r_1)K(r_2,r_1)}{(U_{22}V_{11}-U_{12}V_{21})} \right]$$

$$\left. + \frac{\pi}{\alpha_0^3\alpha^3} J^2(r_2,r_1)\left[\alpha_0(l_2-l_1) + e^{-\alpha_0(l_2-l_1)} - 1\right] \right\} d\alpha \ . \tag{76}$$

For no conductors outside the coil, the term in the large square brackets becomes:

$$\left[\frac{V_{21}}{V_{11}}\ K^2(r_2,r_1)\right] , \tag{77}$$

and for no conductors inside the coil the term becomes:

$$\left[\frac{U_{12}}{U_{22}}\ I^2(r_2,r_1)\right] . \tag{78}$$

Additional coils can also be added to the configuration.

We only calculate M_{ij} for two coils at a time, and the presence of other coils has no effect on the calculation, since we assume that only one coil is carrying current for any given calculation. Once the M_{ij} is determined for all the coils, we can allow all the coils to carry current and solve for the various voltages and currents as a circuit problem.

EFFECT OF DEFECTS

We shall now calculate the effect of defects in one of the inner conductors, n. The voltage induced by the presence of a defect in the nth conductor (the defect-produced voltage change) in a detector coil (Coil 2) by a current flowing in Coil 1 is[5]

$$V'(2) = \frac{3}{2}\ V_0\ \sigma_n\omega^2\alpha_{22}\ \frac{A(2)}{I(2)}\ \frac{A(1)}{I(1)}\ I(1) = j\omega M'_{12}I(1) , \tag{79}$$

where α_{22} is a shape and orientation factor that depends on the particular defect, and V_0 is its volume.

Substituting in Eq. (49) for the vector potential in region n gives the following equation for the change in the mutual impedance, $j\omega M'_{12}$, due to the presence of a defect localized in region n at r,z:

$$j\omega M'_{12} = \frac{3V_0\sigma_n\omega^2\alpha_{22}n_1n_2\mu_0^2}{2\pi^2(l_4-l_3)(r_4-r_3)(l_2-l_1)(r_2-r_1)} \left\{\int_0^\infty \frac{[\sin\alpha(z-l_3)-\sin\alpha(z-l_4)]}{\alpha\alpha_0^2}\right.$$

$$\left.\times\ \frac{[V_{11}(n)I_1(\alpha_n r)+V_{21}(n)K_1(\alpha_n r)][U_{12}I(r_4,r_3)+U_{22}K(r_4,r_3)]}{(U_{22}V_{11}-U_{12}V_{21})}\ d\alpha\right\}$$

$$\times\left\{\int_0^\infty \frac{[\sin\alpha(z-l_1)-\sin\alpha(z-l_2)]}{\alpha\alpha_0^2}\right.$$

$$\left.\times\ \frac{[V_{11}(n)I_1(\alpha_n r)+V_{21}(n)K_1(\alpha_n r)][U_{12}I(r_2,r_1)+U_{22}K(r_2,r_1)]d\alpha}{(U_{22}V_{11}-U_{12}V_{21})}\right\} \tag{80}$$

If we normalize by dividing lengths by $\bar{r}$, all the defect equations take the form:

$$j\omega M'_{12} = \frac{3V_0(\omega\mu_0\sigma_n\bar{r}^2)\omega\alpha_{22}n_1n_2\mu_0\bar{r}}{2\pi^2(l_4-l_3)(r_4-r_3)(l_2-l_1)(r_2-r_1)} \left\{\int_0^\infty \ldots d\alpha\right\}\left\{\int_0^\infty \ldots d\alpha\right\} . \tag{81}$$

If we assume the special case where there are no conductors outside the coil, Eq. (80) reduces to:

$$j\omega M'_{12} = \frac{3V_0(\omega\mu_0\sigma_n\bar{r}^2)\omega\alpha_{22}n_1n_2\mu_0\bar{r}}{2\pi^2(l_4-l_3)(r_4-r_3)(l_2-l_1)(r_2-r_1)}$$

$$\times \left\{\int_0^\infty \frac{[\sin\alpha(z-l_3)-\sin\alpha(z-l_4)]}{\alpha\alpha_0^2}\left[\frac{V_{11}(n)}{V_{11}} I_1(\alpha_n r) + \frac{V_{21}(n)}{V_{11}} K_1(\alpha_n r)\right] K(r_4,r_3)\right.$$

$$\left.\times \frac{[\sin\alpha(z-l_1)-\sin\alpha(z-l_2)]}{\alpha\alpha_0^2}\left[\frac{V_{11}(n)}{V_{11}} I_1(\alpha_n r) + \frac{V_{21}(n)}{V_{11}} K_1(\alpha_n r)\right] K(r_2,r_1)d\alpha\right\} . \tag{82}$$

Since the region in which the vector potential is calculated is in the metal, there is no restriction on the location of Coil 1 and Coil 2. If the two coils are identical and occupy the same volume, Eq. (80) reduces to

$$j\omega M'_{12} = \frac{3V_0(\omega\mu_0\sigma_n\bar{r}^2)\omega\alpha_{22}n_1n_2\mu_0\bar{r}}{2\pi^2(l_2-l_1)^2(r_2-r_1)^2} \left\{\int_0^\infty \frac{[\sin\alpha(z-l_1)-\sin\alpha(z-l_2)]}{\alpha\alpha_0^2}\right.$$

$$\left.\times \frac{[V_{11}(n)I_1(\alpha_n r)+V_{21}(n)K_1(\alpha_n r)][U_{12}I(r_2,r_1)+U_{22}K(r_2,r_1)]}{(U_{22}V_{11}-U_{12}V_{21})} d\alpha\right\}^2 . \tag{83}$$

We shall now calculate the effect of a defect in one of the outer conductors, n′ at r,z. Substituting Eq. (52) for the vector potential in an outer conductor into Eq. (79) and calculating the mutual impedance gives

$$j\omega M'_{12} = \frac{3V_0(\omega\mu_0\sigma_n,\bar{r}^2)\omega\alpha_{22}n_1n_2\mu_0\bar{r}}{2\pi^2(l_4-l_3)(r_4-r_3)(l_2-l_1)(r_2-r_1)} \left\{\int_0^\infty \frac{[\sin\alpha(z-l_3)-\sin\alpha(z-l_4)]}{\alpha\alpha_0^2}\right.$$

$$\left.\times \frac{[U_{12}(n')I_1(\alpha_{n'}r)+U_{22}(n')K_1(\alpha_{n'}r)][V_{11}I(r_4,r_3)+V_{21}K(r_4,r_3)]}{(U_{22}V_{11}-U_{12}V_{21})}\right\} d\alpha$$

$$\times \left\{\int_0^\infty \frac{[\sin\alpha(z-l_1)-\sin\alpha(z-l_2)]}{\alpha\alpha_0^2}\right.$$

$$\left.\times \frac{[U_{12}(n')I_1(\alpha_{n'}r)+U_{22}(n')K_1(\alpha_{n'}r)][V_{11}I(r_2,r_1)+V_{21}K(r_2,r_1)]}{(U_{22}V_{11}-U_{12}V_{21})}\right\} d\alpha . \tag{84}$$

If we assume that there are no conductors inside the coils, the change in mutual impedance due to defects becomes

$$j\omega M'_{12} = \frac{3V_0(\omega\mu_0\sigma_n\bar{r}^2)\omega\alpha_{22}n_1n_2\mu_0\bar{r}}{2\pi^2(l_4-l_3)(r_4-r_3)(l_2-l_1)(r_2-r_1)}$$

$$\times \left\{ \int_0^\infty [\sin\alpha(z-l_3)-\sin\alpha(z-l_4)] \left[\frac{U_{12}(n')}{U_{22}} I_1(\alpha_{n'}r) + \frac{U_{22}(n')}{U_{22}} K_1(\alpha_{n'}r) \right] I(r_4,r_3)\,d\alpha \right\}$$

$$\times \left\{ \int_0^\infty [\sin\alpha(z-l_1)-\sin\alpha(z-l_2)] \left[\frac{U_{12}(n')}{U_{22}} I_1(\alpha_{n'}r) + \frac{U_{22}(n')}{U_{22}} K_1(\alpha_{n'}r) \right] I(r_2,r_1)\,d\alpha \right\} . \tag{85}$$

EDDY CURRENT HEATING

The time-averaged power generated in a differential volume dv of the nth conductor is given by[5]

$$d\bar{P}_n = \frac{1}{2}\sigma_n\omega^2 |A_n|^2 dv = \frac{1}{2}\sigma_n\omega^2 A_n A_n^* dv , \tag{86}$$

where the asterisk represents the complex conjugate.

The form of the equation is similar to that for the effect of defects on a single coil. For the time-averaged power in an inner conductor we substitute Eq. (49) into Eq. (86) and get:

$$d\bar{P}_n(r,z) = \frac{\sigma_n\omega^2 n_1^2\mu_0^2 I^2}{2\pi^2(l_2-l_1)^2(r_2-r_1)^2} \left| \int_0^\infty \frac{[\sin\alpha(z-l_1)-\sin\alpha(z-l_2)]}{\alpha\alpha_0^2} \right.$$

$$\left. \times \frac{[V_{11}(n)I_1(\alpha_n r)+V_{21}(n)K_1(\alpha_n r)][U_{12}I(r_2,r_1)+U_{22}K(r_2,r_1)]}{(U_{22}V_{11}-U_{12}V_{21})}\, d\alpha \right|^2 dv . \tag{87}$$

The integrand of this equation is identical to that of Eq. (83) and, in general, the same computer program can be used for both calculations with only slight modifications.

If we normalize by dividing all lengths by $\bar{r}$, the power equations take the form:

$$d\bar{P} = \frac{(\omega\mu_0\sigma_n\bar{r}^2)\omega\mu_0 n_1^2 I^2\bar{r}}{2\pi^2(l_2-l_1)^2(r_2-r_1)^2} \left| \int_0^\infty \ldots d\alpha \right|^2 dv . \tag{88}$$

For the case of the time-averaged power in a differential volume in a conductor in a region, n′, outside the coil we have:

$$d\bar{P}(r,z) = \frac{(\omega\mu_0\sigma_n\bar{r}^2)\omega\mu_0 n_1^2 I^2 \bar{r}}{2\pi^2(l_2-l_1)^2(r_2-r_1)^2} \left| \int_0^\infty \frac{[\sin\alpha(z-l_1) - \sin\alpha(z-l_2)]}{\alpha\alpha_0^2} \right.$$

$$\left. \times \frac{[U_{12}(n')I_1(\alpha_{n'}r) + U_{22}(n')K_1(\alpha_n r)][V_{11}I(r_2,r_1) + V_{21}K(r_2,r_1)]}{(U_{22}V_{11} - U_{12}V_{21})} d\alpha \right|^2 dv \ . \tag{89}$$

The preceding equations give the expression for various induction phenomena. We shall now turn our attention to the numerical evaluation of one of the equations for a particular problem.

REFERENCES

1. C. V. Dodd and W. E. Deeds, J. Appl. Phys. *39*, 2829 (1968).

2. W. A. Simpson, C. V. Dodd, J. W. Luquire and W. G. Spoeri, *Computer Programs for Some Eddy Current Problems - 1970*, ORNL/TM-3295 (June 1971).

3. C. V. Dodd, C. C. Cheng, C. W. Nestor, Jr., and R. B. Hofstra, *Design of Induction Probes for Measurement of Level of Liquid Metals*, ORNL/TM-4175 (April 1973).

4. C. V. Dodd, W. E. Deeds, J. W. Luquire, and W. G. Spoeri, *Some Eddy-Current Problems and Their Integral Solutions*, ORNL-4384 (April 1969).

5. J. W. Luquire, W. E. Deeds and C. V. Dodd, "Axially Symmetric Eddy Currents in a Spherical Conductor," J. Appl. Phys. *41*, 3976 (1970).

6. F. W. J. Olver, "Bessel Functions of Integer Order," Chapter 9, *Handbook of Mathematical Functions*, Edited by M. Abramowitz and I. A. Stegun, National Bureau of Standards publication AMS 55, pp. 379-385 (June 1964); Andrew Young and Alan Kirk, "Bessel Functions, Part IV, Kelvin Functions," *Royal Society Mathematical Tables*, Vol. 10, University Press, Cambridge (1964).

7. J. M. Blair and C. A. Edwards, *Stable Rational Minimax Approximations to the Modified Bessel Functions $I_0(x)$ and $I_1(x)$*, Atomic Energy of Canada, Ltd., Report AECL-4928 (October 1974).

8. A. E. Russon and J. M. Blair, *Rational Function Minimax Approximation for the Bessel Functions $K_0(x)$ and $K_1(x)$*, Atomic Energy of Canada, Limited, Report AECL-3461 (October 1969).

9. C. V. Dodd, C. C. Cheng and W. E. Deeds, "Induction Coils Coaxial with an Arbitrary Number of Cylindrical Conductors," J. Appl. Phys. *45*, 638 (1974).

10. W. G. Bickley and J. Naylor, "A Short Table of the Functions $Ki_n(x)$, from n=1 to n=16," Phil. Mag. *7*, 20, 343-347 (935).

11. I. Gargantini and T. Pomentale, "Rational Chebyshev Approximations to the Bessel Function Integrals $Ki_s(x)$," Comm. ACM *7*, 727 (1964).

12. G. Eason, B. Noble and I. N. Sneddon, Phil. Trans. Roy. Soc. (London) *A247*, 529 (1955).

APPENDIX - COMPUTER PROGRAMS

We have written two programs for the PDP-10 computer for the calculation of multiple cylindrical conductor problems. The first program, discussed in the first section of the appendix, is designed for interactive use from a remote terminal and provides the user a large amount of instruction. The second program, discussed in the second section, is designed for noninteractive use; the user constructs a file containing the input data and then submits the job to the batch monitor for later execution, usually during the off-shift hours when the computer load is lightest. Both programs use the set of subroutines listed and described in the third section of this appendix. Since the set of subroutines is rather large, we have included an index of subroutine definitions and calls.

To use the interactive program, the user types

EXE MAIN.REL,SUBR.REL

in response to the monitor's period; to use the noninteractive program the user constructs a file containing the command

.EXE MLCCP,REL,SUBR.REL

(Further instructions about submitting batch jobs can be found in the DEC PDP-10 MPB Reference Manual, pp. 4-1, 4-20.)

Interactive Computer Program

To illustrate some of the features of this program we have reproduced below some of the output from a run using a remote terminal. The symbol ↓ means carriage return. All underlined material was typed by the user; all other material either by the program or the monitor. To begin, the user typed

EXE MAIN.REL,SUBR.REL ↓

in response to the monitor's period.

```
.EXE MAIN.REL,SUBR.REL ↓
LINK:    Loading
[LNKXCT MAIN Execution]
```

The first message from the program deals with the parameters of the circuit for an eddy-current liquid level probe[3]:

```
EACH OF THE PARAMETERS OF THE ATTENUATOR CIRCUIT
WILL BE LISTED WITH ITS CURRENT VALUE. TO RETAIN THIS
VALUE, HIT RETURN. TO INSERT A NEW VALUE, TYPE IT IN.

V0   3.23410E+00 ↓

R0   4.64000E+02 ↓

C6   3.83000E-09 ↓

R6   6.94000E+01 ↓

R7   6.94000E+01 ↓

C7   3.83000E-09 ↓

R9   4.64000E+02 ↓

TN   1.90750E+02   100 ↓
```

We observe that in the last line the number of turns in the coils, TN, was reduced from 190.75 to 100; all other parameters were kept the same.

The program next lists the dimensions of the coils, with radii and end positions both in inches and normalized form (divided by the radius of coil No. 1):

```
COIL PARAMETERS ARE :
        ACTUAL      NORM

R1        0.420     0.840
R2        0.580     1.160
L1        0.005     0.010
L2        0.160     0.320
R3        0.420     0.840
R4        0.580     1.160
L3        0.005     0.010
L4        0.160     0.320
N1      100.000
N2      100.000
```

and then gives directions for the user as to how to change any or all of the coil parameters:

```
TO CHANGE ALL COIL PARAMETERS, TYPE "ALL" FOLLOWED
BY A RETURN. TO CHANGE SELECTED COIL PARAMETERS,
TYPE "SELECT". TO SEE THE PARAMETER NAMES, TYPE "NAMES".
TO KEEP THE PRESENT COIL PARAMETERS, HIT RETURN.
```

In this case, the user wished to change the inner radii of the two coils, R_1 and R_3:

```
SELECT ↓

TYPE THE TWO-CHARACTER NAME, AT LEAST ONE SPACE, AND
THE NEW PARAMETER VALUE. END WITH A NAME OF "XX".

R1 .4 ↓
R3 .4 ↓
XX ↓
```

When the user has finished the changes, as indicated by the parameter name "XX", the program lists the coil parameters again:

```
COIL PARAMETERS ARE :
        ACTUAL      NORM

R1       0.400      0.816
R2       0.580      1.184
L1       0.005      0.010
L2       0.160      0.327
R3       0.400      0.816
R4       0.580      1.184
L3       0.005      0.010
L4       0.160      0.327
N1     100.000
N2     100.000
```

followed by a request for information about the air parameter, A_9 (see, for example, Reference 3, ORNL/TM-4175, p. 47). In this case, the user had no previously calculated value for A_9 and requested a new evaluation.

```
THE CURRENT VALUE OF THE AIR PARAMETER, A9 =   0.00000E+00
TO RETAIN THIS VALUE, HIT RETURN. TO INSERT A VALUE,
TYPE T, FOLLOWED BY A RETURN. TO COMPUTE
A NEW VALUE, TYPE ANY OTHER NON-BLANK CHARACTER,
FOLLOWED BY A RETURN.
P ↓

TYPE IN MAXIMUM ALPHA, STEP AND PRINT FREQUENCY
FOR INTEGRATION FOR A9. FOR DEFAULT VALUES, HIT RETURN.
200,20,1 ↓
```

```
      ALPHA          INTEGRAL         TERM

  2.0000000E+01  3.1401252E-01  3.1401252E-01
  4.0000000E+01  3.1459252E-01  5.7999293E-04
  6.0000000E+01  3.1465761E-01  6.5097393E-05
  8.0000000E+01  3.1467031E-01  1.2700724E-05
  1.0000000E+02  3.1467470E-01  4.3893389E-06
  1.2000000E+02  3.1467638E-01  1.6807778E-06
  1.4000000E+02  3.1467738E-01  1.0034218E-06
  1.6000000E+02  3.1467832E-01  9.3779536E-07
  1.8000000E+02  3.1467863E-01  3.0393566E-07
  2.0000000E+02  3.1467884E-01  2.1588050E-07
  2.2000000E+02  3.1467903E-01  1.8158001E-07

A9 =  1.3348786E-02
```

The program now prints the current values of the parameters describing the conductors, and requests further information:

```
INNER CONDUCTOR PROPERTIES:
 N  R,ACTUAL     R,NORM  M,NORM        MU(REL)        RHO

 1     0.300      0.612  3.4943E+01  1.0000E+00  3.5001E+00
 2     0.400      0.816  7.0616E+01  1.0000E+00  1.7320E+00

IF YOU WANT TO CHANGE THE COIL PARAMETERS, TYPE "COIL"
IF YOU WANT TO CHANGE THE CONDUCTORS, TYPE "COND"
IF YOU ARE READY TO RUN, TYPE "RUN"
AND IF YOU WANT TO RETURN TO MONITOR MODE, TYPE "QUIT"
FOLLOWED, IN EACH CASE, BY A RETURN.

COND ↓
```

In response to the query, the user has requested a change in the conductors. The user can retain any current value by typing a carriage return in response to the request for a new value, as shown in the following:

TO INSERT CONDUCTORS, TYPE "INSERT"
TO CHANGE CONDUCTORS, TYPE "CHANGE"
TO DELETE CONDUCTORS, TYPE "DELETE"
FOLLOWED BY A RETURN. TO RETURN TO THE MAIN PROGRAM,
HIT RETURN.

CHANGE ↓

FOR A CONDUCTOR INSIDE THE COILS, TYPE "INT"
FOR A CONDUCTOR OUTSIDE THE COILS, TYPE "EXT"
FOLLOWED BY A RETURN.

INT ↓

TYPE IN THE VALUE "I" CORRESPONDING TO THE INTERNAL REGION
WHOSE PARAMETERS YOU WANT CHANGED

I 1 ↓

TYPE IN THE NEW PARAMETER VALUES.

R .25 ↓

M ↓

MU ↓

RHO ↓

FOR MORE REGIONS, TYPE "YES";
IF NOT, TYPE "NO", FOLLOWED BY A RETURN.

YES ↓

In addition to reducing the outer radius of the first conductor to 0.25 inches, the user wishes to reduce the outer radius of the second conductor to 0.38 inches.

```
FOR A CONDUCTOR INSIDE THE COILS, TYPE "INT"
FOR A CONDUCTOR OUTSIDE THE COILS, TYPE "EXT"
FOLLOWED BY A RETURN.

INT ↓


TYPE IN THE VALUE "I" CORRESPONDING TO THE INTERNAL REGION
WHOSE PARAMETERS YOU WANT CHANGED

I    2 ↓

TYPE IN THE NEW PARAMETER VALUES.

R      .38 ↓

M       ↓

MU      ↓

RHO     ↓


FOR MORE REGIONS, TYPE "YES";
IF NOT, TYPE "NO", FOLLOWED BY A RETURN.

NO ↓
```

The program again requests further instructions:

```
TO INSERT CONDUCTORS, TYPE "INSERT"
TO CHANGE CONDUCTORS, TYPE "CHANGE"
TO DELETE CONDUCTORS, TYPE "DELETE"
FOLLOWED BY A RETURN. TO RETURN TO THE MAIN PROGRAM,
HIT RETURN.

↓
```

Since there are no further conductor changes to be made, as indicated by the carriage return, the program now lists the coil and conductor properties once more:

```
COIL PARAMETERS ARE :
      ACTUAL      NORM

R1      0.400     0.816
R2      0.580     1.184
L1      0.005     0.010
L2      0.160     0.327
R3      0.400     0.816
R4      0.580     1.184
L3      0.005     0.010
L4      0.160     0.327
N1    100.000
N2    100.000

THE CURRENT VALUE OF THE AIR PARAMETER, A9 =   1.33488E-02
TO RETAIN THIS VALUE, HIT RETURN. TO INSERT A VALUE,
TYPE T, FOLLOWED BY A RETURN. TO COMPUTE
A NEW VALUE, TYPE ANY OTHER NON-BLANK CHARACTER,
FOLLOWED BY A RETURN.

↓

INNER CONDUCTOR PROPERTIES:
 N  R,ACTUAL    R,NORM  M,NORM        MU(REL)        RHO

 1     0.250     0.510  3.4943E+01  1.0000E+00  3.5001E+00
 2     0.380     0.776  7.0616E+01  1.0000E+00  1.7320E+00

IF YOU WANT TO CHANGE THE COIL PARAMETERS, TYPE "COIL"
IF YOU WANT TO CHANGE THE CONDUCTORS, TYPE "COND"
IF YOU ARE READY TO RUN, TYPE "RUN"
AND IF YOU WANT TO RETURN TO MONITOR MODE, TYPE "QUIT"
FOLLOWED, IN EACH CASE, BY A RETURN.

RUN ↓
```

The program now requests the frequency range and step for the calculations (for a single frequency, use equal first and last frequencies, and a step of 1.0).

```
FIRST FREQUENCY (KHZ) = 1.25 ↓

LAST FREQUENCY (KHZ) = 1.4 ↓

FREQUENCY STEP (KHZ) = .05 ↓
```

The input data and results can be saved in a file for later analysis:

```
IF YOU WANT TO WRITE THE RESULTS OF THIS CALCULATION
ON FILE NO. 1, TYPE 1. IF NOT, HIT RETURN.
1 ↓
```

The program now calculates and prints the results for each of the requested frequencies (to save space, we show only the first):

```
FREQUENCY (KHZ) =    1.250

FOR COIL IN AIR :

ATTENUATOR OUTPUT VOLTAGE
REAL =  1.63195E-04 IMAG =  1.28101E-02
MAGN =  1.28112E-02 PHASE=  1.55806E+00 RADIANS
                            8.92701E+01 DEGREES

ALPHA        Z1                Z2

  1.0  -1.8688785E-01  -4.3957077E-02 +
  2.0  -2.6910521E-01  -7.0336639E-02
  3.0  -3.0212513E-01  -8.5038655E-02
  4.0  -3.1542202E-01  -9.3013400E-02
  5.0  -3.2083531E-01  -9.7255419E-02
  6.0  -3.2305368E-01  -9.9472404E-02
  7.0  -3.2396529E-01  -1.0061267E-01
  8.0  -3.2434059E-01  -1.0119134E-01
  9.0  -3.2449551E-01  -1.0148190E-01
 10.0  -3.2455966E-01  -1.0162652E-01
 11.0  -3.2458628E-01  -1.0169786E-01
 12.0  -3.2459731E-01  -1.0173265E-01
 13.0  -3.2460185E-01  -1.0174932E-01
 14.0  -3.2460369E-01  -1.0175711E-01
 15.0  -3.2460441E-01  -1.0176061E-01
 16.0  -3.2460468E-01  -1.0176209E-01
 17.0  -3.2460477E-01  -1.0176266E-01
 18.0  -3.2460480E-01  -1.0176285E-01

NORMALIZED IMPEDANCE   REAL =   1.02937E-01 IMAG =   6.71650E-01

FOR COIL PLUS CONDUCTORS:

ATTENUATOR OUTPUT VOLTAGE
REAL =  1.40130E-03 IMAG =  8.58299E-03
MAGN =  8.69662E-03 PHASE=  1.40896E+00 RADIANS
                            8.07274E+01 DEGREES
              PHASE SHIFT = -8.54267E+00 DEGREES
```

When the calculations are finished, the program requests further instructions:

```
FOR A NEW SET OF ATTENUATOR PARAMETERS,
TYPE T. FOR NEW COIL OR CONDUCTOR PROPERTIES, TYPE C.
TO RETURN TO MONITOR MODE, TYPE "QUIT".

T ↓
```

Since the user has requested new circuit parameters, the program lists the current values and accepts new values, where typed in:

```
EACH OF THE PARAMETERS OF THE ATTENUATOR CIRCUIT
WILL BE LISTED WITH ITS CURRENT VALUE. TO RETAIN THIS
VALUE, HIT RETURN. TO INSERT A NEW VALUE, TYPE IT IN.

V0   3.23410E+00 ↓

R0   4.64000E+02  325. ↓

C6   3.83000E-09 ↓

R6   6.94000E+01 ↓

R7   6.94000E+01 ↓

C7   3.83000E-09 ↓

R9   4.64000E+02  325. ↓

TN   1.00000E+02 ↓
```

The output voltage calculations are repeated for each of the frequencies used in the previous calculations, with appropriate output to the user's terminal and to the data file, if requested. When these calculations are complete, the program again asks for instructions:

```
FOR A NEW SET OF ATTENUATOR PARAMETERS,
TYPE T. FOR NEW COIL OR CONDUCTOR PROPERTIES, TYPE C.
TO RETURN TO MONITOR MODE, TYPE "QUIT".

QUIT↓

STOP

END OF EXECUTION
CPU TIME: 40.64 ELAPSED TIME: 25:34.48
EXIT
```

The data file containing the output from the program can be listed on the user's terminal, if desired:

```
TY FOR01.DAT
  4.0000000E-01  5.8000000E-01  5.0000000E-03  1.6000000E-01
  4.0000000E-01  5.8000000E-01  5.0000000E-03  1.6000000E-01
  1.0000000E+02  1.0000000E+02  1.3348786E-02
  3.2341000E+00  4.6400000E+02  3.8300000E-09  6.9400000E+01
  6.9400000E+01  3.8300000E-09  4.6400000E+02  1.0000000E+02
    2
  2.5000000E-01  1.4553603E+02  1.0000000E+00  3.5001500E+00
  3.8000000E-01  2.9411135E+02  1.0000000E+00  1.7319900E+00
    0
  1.2500000E+00  1.2811181E-02  1.5580575E+00  8.9270118E+01
  8.6966242E-03  1.4089598E+00  8.0727448E+01 -8.5426693E+00
  1.3000000E+00  1.3323745E-02  1.5575479E+00  8.9240921E+01
  9.0097901E-03  1.4098785E+00  8.0780087E+01 -8.4608335E+00
  1.3500000E+00  1.3836323E-02  1.5570383E+00  8.9211724E+01
  9.3220370E-03  1.4107460E+00  8.0829791E+01 -8.3819332E+00
  1.4000000E+00  1.4348915E-02  1.5565287E+00  8.9182527E+01
  9.6334037E-03  1.4115674E+00  8.0876853E+01 -8.3056736E+00
  4.0000000E-01  5.8000000E-01  5.0000000E-03  1.6000000E-01
  4.0000000E-01  5.8000000E-01  5.0000000E-03  1.6000000E-01
  1.0000000E+02  1.0000000E+02  1.3348786E-02
  3.2341000E+00  3.2500000E+02  3.8300000E-09  6.9400000E+01
  6.9400000E+01  3.8300000E-09  3.2500000E+02  1.0000000E+02
    2
  2.5000000E-01  1.4553603E+02  1.0000000E+00  3.5001500E+00
  3.8000000E-01  2.9411135E+02  1.0000000E+00  1.7319900E+00
    0
  1.2500000E+00  1.6412774E-02  1.5550393E+00  8.9097190E+01
  1.1137857E-02  1.4069967E+00  8.0614975E+01 -8.4822149E+00
  1.3000000E+00  1.7069419E-02  1.5544090E+00  8.9061075E+01
  1.1538821E-02  1.4078451E+00  8.0663582E+01 -8.3974934E+00
  1.3500000E+00  1.7726080E-02  1.5537787E+00  8.9024960E+01
  1.1938601E-02  1.4086424E+00  8.0709266E+01 -8.3156939E+00
  1.4000000E+00  1.8382757E-02  1.5531483E+00  8.8988845E+01
  1.2337249E-02  1.4093938E+00  8.0752319E+01 -8.2365255E+00
```

The first three lines contain the coil dimensions and the air parameter, A_9; the next two lines contain the attenuator parameters. The next line contains the number of inner conductors (2) and the next lines contain the parameters for the inner conductors, one line per conductor. Since there are no external conductors in this example, the number of external conductors is zero. The following lines contain the frequency, the magnitude and phase of the output voltage for the coil in air and the coil plus conductors, and the phase shift (in degrees) due to the conductors, two lines per frequency value.

```
C
C        MAIN.FOR
C
C        THIS IS THE MAIN PROGRAM FOR CALCULATIONS WITH
C        COILS ENCIRCLING OR ENCIRCLED BY CYLINDRICAL
C        CONDUCTORS.
C
      EXTERNAL QIDF, DJCO, GAUS2, CINT, CITBLO
      COMMON /INTCON/XRIN(10),XMIN(10),XMUI(10),XRHI(10),NCIN
      COMMON /EXTCON/XREX(10),XMEX(10),XMUX(10),XRHX(10),NCEX
C
C        THE COMMON BLOCKS INTCON AND EXTCON CONTAIN THE INPUT
C        PARAMETERS FOR THE INTERNAL AND EXTERNAL CONDUCTORS,
C        RESPECTIVELY. THE RADII (XREX AND XRIN) ARE IN INCHES
C        AND THE RESISTIVITIES (XRHI AND XRHX) ARE IN
C        MICRO-OHM CENTIMETERS.
C
      COMMON /REGINT/RIN(10),EMIN(10),PERMIN(10),NRIN
      COMMON /REGEXT/REX(10),EMEX(10),PERMEX(10),NREX
C
C        THE COMMON BLOCKS REGINT AND REGEXT CONTAIN THE NORMALIZED
C        PROPERTIES FOR THE INTERNAL AND EXTERNAL CONDUCTORS,
C        RESPECTIVELY. ALL DISTANCES ARE NORMALIZED BY DIVIDING THEM
C        BY THE MEAN RADIUS OF COIL NUMBER 1.
C
      COMMON /COILIN/ CSIZE(10)
C
C        THE COMMON BLOCK COILIN CONTAINS THE INPUT COIL PARAMETERS
C        WITH ALL DISTANCES IN INCHES. THE PARAMETERS ARE
C          CSIZE(1) - R1
C          CSIZE(2) - R2
C          CSIZE(3) - L1
C          CSIZE(4) - L2
C          CSIZE(5) - R3
C          CSIZE(6) - R4
C          CSIZE(7) - L3
C          CSIZE(8) - L4
C          CSIZE(9) - N1
C          CSIZE(10) - N2
C
C        WHERE THE R'S ARE RADII, THE L'S ARE DISTANCES FROM THE Z = 0
C        PLANE, AND THE N'S ARE NUMBERS OF TURNS. ON THE R'S AND L'S,
C        SUFFIXES 1 AND 2 REFER TO COIL NO. 1, AND SUFFIXES 3 AND 4
C        TO COIL NO. 2. SEE DODD, CHENG AND DEEDS,
C        J. APPL. PHYS. 45, 638 (1974), FIGS. 4 AND 5, P. 639.
C
      COMMON /COILS/ CZNORM(8)
C
C        THE COMMON BLOCK COILS CONTAINS THE NORMALIZED COIL DIMENSIONS
C        IN THE SAME ORDER AS THE INPUT DIMENSIONS ARE STORED IN THE
C        COMMON BLOCK COILIN.
C
C        ALL DISTANCES ARE NORMALIZED BY DIVIDING THEM BY THE MEAN
C        RADIUS OF COIL NO. 1.
C
```

MULTIPLE CYLINDRICAL CONDUCTORS
INTERACTIVE MAIN PROGRAM

```
      COMMON /CIRCT/ V0, R0, C6, R6, ZDRL, ZDIM, ZPURL, ZPUIM,
     1               R7, C7, R9, TN
      COMMON /INNML/ OMEGA, XLNTH, R1, R2, AIR9, ZRE, ZIM, RBAR
C
C        THE COMMON BLOCKS CIRCT AND INNML CONTAIN THE PARAMETERS NEEDED
C        TO COMPUTE THE ATTENUATOR CIRCUIT PROPERTIES, AS DESCRIBED IN
C        ORNL-TM-4175, PP. 108-111.
C
      COMMON /FACT/RRB
C
C        RRB IS THE RECIPROCAL OF THE AVERAGE RADIUS OF
C        COIL NO. 1, AS CALCULATED IN SUBROUTINE NORMCO.
C
      COMMON /INTPAR/ ALMAX, STEP, IP
      DIMENSION JUDGE(4)
      DIMENSION FREQ(20), ANGF(20), ZNRMRE(20), ZNRMIM(20)
      EQUIVALENCE (LOOK, XLOOK)
      DATA JUDGE/4HCOIL, 4HCOND, 3HRUN, 4HQUIT/
      DATA DEGPRA /57.2957795/
      DATA ITY, A9, BLANK /5, 0., 5H     /
      DATA HT, HC, FTHPI /5HT    , 5HC    ,  12.5663706E3/
      DATA CONV /.0254/
      DATA THRESH, TOL /1.E-3, 5.E-7/
C
C        OPEN FILE 1 FOR OUTPUT
C
      CALL OFILE (1, 'FOR01')
C
C        ATTENUATOR CIRCUIT PROPERTIES
C
      CALL ATTEN (ITY)
C
C        COIL PROPERTIES
C
      IF (CSIZE(1) .NE. 0.) CALL NORMCO
      CALL CDISP (ITY)
C
 90   CALL CCHAN
C
 95   CALL CDISP (ITY)
      RBAR = .5*(CSIZE(1) + CSIZE(2))
      RB2 = RBAR**2
      TQ = ((CSIZE(2) - CSIZE(1))*(CSIZE(4) - CSIZE(3))/RB2)*
     1     ((CSIZE(6) - CSIZE(5))*(CSIZE(8) - CSIZE(7))/RB2)
C
C        SEE IF THE AIR PARAMETER, A9, HAS A VALUE
C
      WRITE (ITY,1) A9
 1    FORMAT ('0THE CURRENT VALUE OF THE AIR PARAMETER, A9 =',1PE14.5/
     1 ' TO RETAIN THIS VALUE, HIT RETURN. TO INSERT A VALUE,'/
     2 ' TYPE T, FOLLOWED BY A RETURN. TO COMPUTE'/
     3 ' A NEW VALUE, TYPE ANY OTHER NON-BLANK CHARACTER,'/
     4 ' FOLLOWED BY A RETURN.')
      READ (ITY,125) XLOOK
      IF (XLOOK .NE. HT) GO TO 96
```

MULTIPLE CYLINDRICAL CONDUCTORS
INTERACTIVE MAIN PROGRAM

```
      WRITE (ITY,2)
 2    FORMAT ('0A9 =',$)
      READ (ITY,5) A9
      GO TO 97
 96   IF (XLOOK .EQ. BLANK) GO TO 97
      WRITE (ITY,44)
 44   FORMAT ('0TYPE IN MAXIMUM ALPHA, STEP AND PRINT FREQUENCY'/
     1 ' FOR INTEGRATION FOR A9. FOR DEFAULT VALUES, HIT RETURN.')
      READ (ITY,45) ALMAX, STEP, IP
 45   FORMAT (2E, I)
      IF (CSIZE(8) .EQ. CSIZE(4)) CALL COLAIR (Q9, ITY, CINT)
      IF (CSIZE(8) .NE. CSIZE(4)) CALL COLAIR (Q9, ITY, CITBLO)
      A9 = Q9*TQ
      WRITE (ITY,3) A9
 3    FORMAT ('0A9 =', 1PE15.7)
C
C        SET COIL PROPERTIES IN COMMON BLOCKS /INNML/ AND
C        /CIRCT/ FOR USE BY ATTENUATOR CALCULATIONS
C
 97   RBAR = RBAR*CONV
      R1 = CZNORM(1)
      R2 = CZNORM(2)
      XLNTH = CZNORM(4) - CZNORM(3)
      AIR9 = A9
      TN = CSIZE(9)
C
C        NORMALIZE CONDUCTOR PROPERTIES
C
C        DO INTERNAL CONDUCTORS, IF ANY
C
      NRIN = NCIN
      IF (NCIN .EQ. 0) GO TO 105
      DO 100 N=1,NCIN
        RIN(N) = XRIN(N)*RRB
        IF (XMIN(N) .EQ. 0.) XMIN(N) = 509.39792*XMUI(N)/XRHI(N)
C
C        THE FACTOR 509.39792 IS THE CONVERSION FACTOR NEEDED TO
C        ACCOUNT FOR DISTANCES IN INCHES, FREQUENCIES IN KILOHERTZ
C        AND RESISTIVITIES IN MICRO-OHM CENTIMETERS.
C
        EMIN(N) = XMIN(N)*RB2
        PERMIN(N) = XMUI(N)
 100  CONTINUE
C
C        NORMALIZE PROPERTIES FOR EXTERNAL CONDUCTORS (IF ANY)
C
 105  NREX = NCEX
      IF (NREX .EQ. 0) GO TO 115
      DO 110 N = 1,NCEX
        REX(N) = XREX(N)*RRB
        IF (XMEX(N) .EQ. 0.) XMEX(N) = 509.39792*XMUX(N)/XRHX(N)
        EMEX(N) = XMEX(N)*RB2
        PERMEX(N) = XMUX(N)
 110  CONTINUE
C
```

MULTIPLE CYLINDRICAL CONDUCTORS
INTERACTIVE MAIN PROGRAM

```
 115  IF (NRIN .GT. 0) CALL CNDDSP(1,ITY)
      IF (NREX .GT. 0) CALL CNDDSP(2,ITY)
      WRITE (ITY,120)
 120  FORMAT('0IF YOU WANT TO CHANGE THE COIL PARAMETERS, TYPE "COIL"'/
     1 ' IF YOU WANT TO CHANGE THE CONDUCTORS, TYPE "COND"'/
     2 ' IF YOU ARE READY TO RUN, TYPE "RUN"'/
     3 ' AND IF YOU WANT TO RETURN TO MONITOR MODE, TYPE "QUIT"'/
     4 ' FOLLOWED, IN EACH CASE, BY A RETURN.'/1X)
 123  READ (ITY,125) LOOK
 125  FORMAT (A4)
      CALL MATCH (LOOK,JUDGE,4,KMAT)
      IF (KMAT .NE. 0) GO TO 140
      WRITE (ITY,130) LOOK
 130  FORMAT (1X,A4,'? TRY AGAIN!   ',$)
      GO TO 123
 140  GO TO (90,150,160,900), KMAT
C
C        CONDUCTOR PROPERTIES
C
 150  CALL CNDCHA(ITY)
      GO TO 95
C
C        RUN A CALCULATION WITH THE CURRENT PARAMETERS
C
 160  WRITE (ITY,4)
C
C        REQUEST FREQUENCY RANGE AND STEP
C
 4    FORMAT ('0FIRST FREQUENCY (KHZ) = ',$)
      READ (ITY,5) F1
 5    FORMAT (E)
      WRITE (ITY,6)
 6    FORMAT (' LAST FREQUENCY (KHZ) = ',$)
      READ (ITY,5) F2
      WRITE (ITY,7)
 7    FORMAT (' FREQUENCY STEP (KHZ) = ',$)
      READ (ITY,5) DF
      NF = IFIX ((F2 - F1)/DF + 1.05)
C
C        ASK IF READY TO WRITE RESULTS ON FILE
C
      IWRT = 0
      WRITE (ITY,22)
 22   FORMAT ('0IF YOU WANT TO WRITE THE RESULTS OF THIS CALCULATION'/
     1 ' ON FILE NO. 1, TYPE 1. IF NOT, HIT RETURN.')
      READ (ITY,23) IWRT
 23   FORMAT (I)
      IF (IWRT .EQ. 0) GO TO 55
C
C        WRITE COIL PARAMETERS ON FILE 1
C
      WRITE (1,21) CSIZE, A9
C
C        WRITE ATTENUATOR PARAMETERS
C
```

MULTIPLE CYLINDRICAL CONDUCTORS
INTERACTIVE MAIN PROGRAM

```
      WRITE (1,21) V0, R0, C6, R6, R7, C7, R9, TN
C
C        WRITE MATERIALS PROPERTIES ON FILE NO. 1
C
      WRITE (1,20) NCIN
 20   FORMAT (1X, I5)
      IF (NCIN .NE. 0)
     1   WRITE (1,21) (XRIN(N), XMIN(N), XMUI(N), XRHI(N), N=1,NCIN)
 21   FORMAT (1X, 1P4E15.7)
      WRITE (1,20) NCEX
      IF (NCEX .NE. 0)
     1   WRITE (1,21) (XREX(N), XMEX(N), XMUX(N), XRHX(N), N=1,NCEX)
C
 55   CONTINUE
C
C         SET OLD FREQUENCY TO 1 KHZ AND THE ANGULAR FREQUENCY
C         TO 2 PI TIMES 1 KHZ
C
      FOLD = 1.0
      OMEGA = 6283.18531
      F = F1
      NF = MIN0(NF,20)
C
C         BEGIN LOOP OVER FREQUENCIES
C
      DO 300 N=1,NF
        RATIO = F/FOLD
        IF (NRIN .EQ. 0) GO TO 170
C
C         ADJUST M VALUES FOR INTERNAL REGIONS (IF ANY) TO THE
C         NEW FREQUENCY
C
        DO 165 I=1,NRIN
 165    EMIN(I) = EMIN(I)*RATIO
C
C         AND THE SAME FOR THE EXTERNAL REGIONS (IF ANY)
C
 170    IF (NREX .EQ. 0) GO TO 180
        DO 175 I=1,NREX
 175    EMEX(I) = EMEX(I)*RATIO
C
C         INITIALIZE FOR INTEGRATION OVER ALPHA
C
 180    A2 = 1.
        A1 = 0.
        Z1 = 0.
        Z2 = 0.
C
C         COMPUTE OUTPUT VOLTAGE FOR COIL IN AIR
C
        WRITE (ITY, 8) F
 8      FORMAT ('0FREQUENCY (KHZ) =',F8.3)
        OMEGA = OMEGA*RATIO
        ZRE = 0.
        ZIM = 1.
```

MULTIPLE CYLINDRICAL CONDUCTORS
INTERACTIVE MAIN PROGRAM

```
      CALL VOUT (VORL, VOIM, VOABS, VOARG)
      PHIAIR = DEGPRA*VOARG
      WRITE (ITY,12)
 12   FORMAT ('0FOR COIL IN AIR :')
      WRITE (ITY,11) VORL, VOIM, VOABS, VOARG, PHIAIR
      WRITE (ITY,18)
 18   FORMAT ('0ALPHA',7X,'Z1',14X,'Z2'/1X)
C
C      WRITE OUTPUT FOR COIL IN AIR ON FILE 1
C
      IF (IWRT .NE. 0) WRITE (1,21) F, VOABS, VOARG, PHIAIR
C
C        PICK CORRECT INTEGRAND AND INTEGRATE FROM A1 TO A2
C
 185  IF (CSIZE(8) .EQ. CSIZE(4))
     1 CALL ADAP2 (A1, A2, GAUS2, QIDF, THRESH, TOL, S1, S2, CHAR)
      IF (CSIZE(8) .NE. CSIZE(4))
     1 CALL ADAP2 (A1, A2, GAUS2, DJCO, THRESH, TOL, S1, S2, CHAR)
C
C        ADD CONTRIBUTIONS TO TOTALS
C
      Z1 = Z1 + S1
      Z2 = Z2 + S2
      WRITE (ITY,9) A2, Z1, Z2, CHAR
 9    FORMAT (1X, F5.1, 1P2E16.7, 1X, A1)
C
C        TEST FOR CONVERGENCE
C
      IF (ABS(S1/Z1) + ABS(S2/Z2) .LT. 5.E-7) GO TO 250
      A1 = A2
      A2 = A2 + 1.
      IF (A2 .LE. 30.) GO TO 185
C
C        IF ALPHA IS GREATER THAN THE MAXIMUM ALLOWED,
C        GIVE UP.
C
 250  ZRE = -Z2/Q9
      ZIM = (Z1 + Q9)/Q9
      FREQ(N) = F
      ANGF(N) = OMEGA
      ZNRMRE(N) = ZRE
      ZNRMIM(N) = ZIM
      WRITE (ITY,10) ZRE, ZIM
 10   FORMAT ('0NORMALIZED IMPEDANCE REAL =',1PE14.5,
     1 ' IMAG =', E14.5)
C
C      CALCULATE ATTENUATOR OUTPUT VOLTAGE
C
      CALL VOUT (VORL, VOIM, VOABS, VOARG)
      DEGR = DEGPRA*VOARG
      WRITE (ITY,13)
 13   FORMAT ('0FOR COIL PLUS CONDUCTORS:')
      WRITE (ITY,11) VORL, VOIM, VOABS, VOARG, DEGR
 11   FORMAT ('0ATTENUATOR OUTPUT VOLTAGE'/
     1 ' REAL =', 1PE13.5, ' IMAG =', E13.5/
```

MULTIPLE CYLINDRICAL CONDUCTORS
INTERACTIVE MAIN PROGRAM

```
     2  ' MAGN =', E13.5, ' PHASE=', E13.5, ' RADIANS'/
     3  27X, E13.5, ' DEGREES')
        DPHI = DEGR - PHIAIR
        WRITE (ITY,16) DPHI
 16     FORMAT (14X, 'PHASE SHIFT =',1PE13.5, ' DEGREES')
C
C        WRITE OUTPUT VOLTAGE MAG, PHASE AND PHASE SHIFT ON FILE NO. 1
C
        IF (IWRT .NE. 0) WRITE (1,21) VOABS, VOARG, DEGR, DPHI
        FOLD = F
 300  F = F + DF
C
C        FINISHED WITH THIS SET OF FREQUENCIES.
C        ASK FOR NEW ATTENUATOR PARAMETERS.
C
 400  WRITE (ITY,33)
 33   FORMAT ('0FOR A NEW SET OF ATTENUATOR PARAMETERS,'/
     1 ' TYPE T. FOR NEW COIL OR CONDUCTOR PROPERTIES, TYPE C.'/
     2 ' TO RETURN TO MONITOR MODE, TYPE "QUIT".'/1X)
C
 401  READ (ITY,125) XLOOK
      IF (XLOOK .NE. HT) GO TO 410
      CALL ATTEN (ITY)
      IF (IWRT .EQ. 0) GO TO 402
C
C        WRITE COIL PARAMETERS ON FILE 1
C
      WRITE (1,21) CSIZE, A9
C
C        WRITE ATTENUATOR PARAMETERS
C
      WRITE (1,21) V0, R0, C6, R6, R7, C7, R9, TN
C
C        WRITE MATERIALS PROPERTIES ON FILE NO. 1
C
      WRITE (1,20) NCIN
      IF (NCIN .NE. 0)
     1   WRITE (1,21) (XRIN(N), XMIN(N), XMUI(N), XRHI(N), N=1,NCIN)
      WRITE (1,20) NCEX
      IF (NCEX .NE. 0)
     1   WRITE (1,21) (XREX(N), XMEX(N), XMUX(N), XRHX(N), N=1,NCEX)
C
C        COMPUTE ATTENUATOR CIRCUIT OUTPUT VOLTAGE FOR EACH
C        OF THE SET OF NF FREQUENCIES WITH THE NEW CIRCUIT
C        PARAMETERS.
C
 402  DO 405 N=1,NF
        F = FREQ(N)
        WRITE (ITY,8) F
        OMEGA = ANGF(N)
        ZRE = 0.
        ZIM = 1.
        CALL VOUT (VORL, VOIM, VOABS, VOARG)
        PHIAIR = DEGPRA*VOARG
```

MULTIPLE CYLINDRICAL CONDUCTORS
INTERACTIVE MAIN PROGRAM

```
C         WRITE OUTPUT FOR COIL IN AIR ON FILE 1
C
        IF (IWRT .NE. 0) WRITE (1,21) F, VOABS, VOARG, PHIAIR
        WRITE (ITY,12)
        WRITE (ITY,11) VORL, VOIM, VOABS, VOARG, PHIAIR
        ZRE = ZNRMRE(N)
        ZIM = ZNRMIM(N)
        CALL VOUT (VORL, VOIM, VOABS, VOARG)
        DEGR = VOARG*DEGPRA
        WRITE (ITY,13)
        WRITE (ITY,11) VORL, VOIM, VOABS, VOARG, DEGR
        DPHI = DEGR - PHIAIR
        WRITE (ITY,16) DPHI
C
C         WRITE OUTPUT VOLTAGE MAG, PHASE AND PHASE SHIFT ON FILE NO. 1
C
        IF (IWRT .NE. 0) WRITE (1,21) VOABS, VOARG, DEGR, DPHI
 405  CONTINUE
      GO TO 400
C
C         XLOOK IS NOT "T". TEST FOR "C" OR "QUIT".
C
 410  IF (XLOOK .EQ. HC) GO TO 95
      IF (LOOK .EQ. JUDGE(4)) GO TO 900
C
C         XLOOK IS NOT RECOGNIZED - TYPE IT OUT, AND ASK FOR
C         ANOTHER TRY.
C
      WRITE (ITY,130) XLOOK
      GO TO 401
C
C         "QUIT" WAS TYPED IN - CLOSE THE FILE AND GO HOME.
C
 900  CALL RELEAS (1)
      STOP
      END
```

MULTIPLE CYLINDRICAL CONDUCTORS
INTERACTIVE MAIN PROGRAM

```
      BLOCK DATA
      COMMON /COILIN/ CSIZE(10)
      COMMON /CNAME/ NMCP(11) /INOUT/ WORD(2)
      COMMON /INTCON/ XRIN(10), XMIN(10), XMUI(10),
     1                XRHI(10), NCIN
      COMMON /EXTCON/ XREX(10), XMEX(10), XMUX(10),
     1                XRHX(10), NCEX
      DATA CSIZE /.42,.58,.005,.16,.42,.58,.005,.16,
     1 100., 100./
      DATA NMCP /5HR1    ,5HR2    ,5HL1    ,5HL2    ,5HR3    ,
     1   5HR4    ,5HL3    ,5HL4    ,5HN1    ,5HN2    ,5HXX    /
      DATA WORD /5HINNER, 5HOUTER/
      DATA XRIN /.3, .4, 8*0./
      DATA XMIN /10*0./
      DATA XMUI /2*1., 8*0./
      DATA XRHI /3.50015, 1.73199, 8*0./
      DATA NCIN, NCEX /2, 0/
      DATA XREX /.6, .7, 8*0./
      DATA XMEX /10*0./
      DATA XMUX /2*1., 8*0./
      DATA XRHX /10*1.E6/
      END
```

Noninteractive Program

This program will compute the normalized impedance and output voltage for identical, intermeshed coils in the presence of multiple cylindrical conductors. To use the program, a data file named MLCCP.DAT must be created, containing the necessary input data. This can be done with any of the editing programs now available; if the line editor is used, the line numbers must be stripped from the file before execution of the program. A convenient way to do this is to type:

COPY/N = MLCCP.DAT

in response to the monitor's period.

The format of the data file is as follows:

line 1: V0,R0,C6,R6,R7,C7,R9 (attenuator circuit parameters as defined in Reference 3)

line 2: NCIN (No. of internal conductors)

line 3: R(1), M(1), MU(1), RHO(1)

line 4: R(2), M(2), MU(2), RHO(2)

.

.

.

line NCIN + 2

where R, M, MU, and RHO are the outer radius, M-value (if known), relative permeability and resistivity for each internal conductor. The order is from the innermost conductor outward. If there are no internal conductors, enter a zero for NCIN.

line NCIN + 3: NCEX (No. of external conductors) followed by NCEX lines of data in the same format as for the internal conductors, except that R is the inner radius of each conductor, and that the order is from the outermost conductor inward.

If there are no external conductors, enter a zero for NCEX. The next two lines contain the coil parameters in the form

R1, R2, L1, L2, N1

R3, R4, L3, L4, N2

where R1 and R2 are the inner and outer radii of the first coil, L1 and L2 are the lower and upper axial positions of the ends of the first coil, and N1 is the number of turns. R3 through N2 are the analogous parameters for coil no. 2.

The next line contains the value of the air parameter, A_9. If a zero is entered here, the following line must contain either

a) the maximum alpha, the step size and print frequency for the numerical integration for A_9; or

b) zeroes or blanks, in which case the default values of 50, 1 and 10 will be used.

The next line contains the first frequency (F1), the last frequency (F2) and the frequency step (DF), all in kHz. The calculation will be done for a maximum of 20 frequencies, starting with F1 and increasing in steps of DF.

The next line contains the control integer NEXT to specify what is wanted for the next case. A value of 1 means to read new frequency data, 2 means read new coil data, 4 means to read new conductor data, and 8 means to read new attenuator parameters. Combinations of the above can be used by entering the sum of the appropriate values of NEXT; for example, to use new frequency data and new conductors, enter 1 + 4 = 5 as NEXT. To stop the program, enter zero.

A listing of the data file for a sample problem is shown in Fig. A1. The output of the noninteractive program is similar to that of the interactive program but does not include any of the prompting. In this example, there are two internal and no external conductors; a value of A_9 is given and calculations are requested at a frequency of 1.25 kHz. The value of NEXT is 5, indicating new conductors and new frequency data; the radius of the inner conductor is reduced to 0.2 inches and calculations are requested at 1.30 and 1.35 kHz. Finally, with NEXT = 8, the attenuator properties are altered.

```
3.2341,464,3.83E-9,69.4,69.4,3.83E-9,464
2
.3,0,1.,3.5001
.4,0,1.,1.732
0
.42,.58,.005,.605,190.75
.42,.58,.005,.605,190.75
.092737839
1.25,1.25,.1
 5
 2
.2,0,1.,3.5001
.4,0,1.,1.732
0
1.3,1.35,.05
8
3.2341,928,3.83E-9,69.4,69.4,3.83E-9,928
0
```

Fig. A1. Data file for input to noninteractive program

MULTIPLE CYLINDRICAL CONDUCTORS
NONINTERACTIVE MAIN PROGRAM

```
C
C         MLCCP.FOR
C
      EXTERNAL GAUS2, QIDF, DJCO
      COMMON /INTCON/ XRIN(10), XMIN(10), XMUI(10), XRHI(10), NCIN
     1       /EXTCON/ XREX(10), XMEX(10), XMUX(10), XRHX(10), NCEX
     2       /REGINT/ RIN(10), EMIN(10), PERMIN(10), NRIN
     3       /REGEXT/ REX(10), EMEX(10), PERMEX(10), NREX
     4       /COILIN/ R1, R2, XL1, XL2, R3, R4, XL3, XL4, XN1, XN2
     5       /INTPAR/ ALMAX, STEP, IP
     6       /FACT/ RRB
      COMMON /COILS/ CZNORM(8)
     1       /CIRCT/ V0, R0, C6, R6, ZZ(4), R7, C7, R9, TN
     2       /INNML/ OMEGA, XLEN, RC1, RC2, A9, ZRE, ZIM, RBAR
      DIMENSION FREQ(20), ANGF(20), ZNRMRE(20), ZNRMIM(20)
      DATA THRESH, TOL /1.E-3, 5.E-7/
      DATA DEGRRA, CONV /57.2957795, .0254/
      TYPE 1
 1    FORMAT ('1OUTPUT TO LINE PRINTER (6) OR TELETYPE (5)?',1X, $)
      ACCEPT 2, LOU
 2    FORMAT (I)
      NEXT = 15
      CALL IFILE (10,'MLCCP')
C
 100  IF (NEXT .LT. 8) GO TO 102
      READ (10,10) V0, R0, C6, R6, R7, C7, R9
 10   FORMAT (7E)
      NEXT = NEXT - 8
C
 102  IF (NEXT .LT. 4) GO TO 125
      READ (10,2) NCIN
      IF (NCIN .EQ. 0) GO TO 110
      DO 105 N=1,NCIN
        READ (10,3) XRIN(N), XMIN(N), XMUI(N), XRHI(N)
 3      FORMAT (4E)
 105  CONTINUE
C
 110  READ (10,2) NCEX
      IF (NCEX .EQ. 0) GO TO 120
      DO 115 N=1,NCEX
        READ (10,3) XREX(N), XMEX(N), XMUX(N), XRHX(N)
 115  CONTINUE
C
 120  NEXT = NEXT - 4
C
 125  IF (NEXT .LT. 2) GO TO 130
      READ (10,4) R1, R2, XL1, XL2, XN1, R3, R4, XL3, XL4, XN2
 4    FORMAT (5E)
      RB2 = (.5*(R1 + R2))**2
      CALL NORMCO
      NEXT = NEXT - 2
      Q9 = 0.
      READ (10,5) A9
 5    FORMAT (E)
      IF (A9 .NE. 0.) GO TO 130
```

MULTIPLE CYLINDRICAL CONDUCTORS
NONINTERACTIVE MAIN PROGRAM

```
      READ (10,66) ALMAX, STEP, IP
 66   FORMAT (2E, I)
      IF (XL4 .EQ. XL2) CALL COLAIR (Q9, LOU, CINT)
      IF (XL4 .NE. XL2) CALL COLAIR (Q9, LOU, CITBLO)
      A9 = Q9*((R2 - R1)*(XL2 - XL1)/RB2)*
     1        ((R4 - R3)*(XL4 - XL3)/RB2)
C
 130  WRITE (LOU,22) A9
 22   FORMAT ('0A9 =', 1PE14.5)
      IF (Q9 .EQ. 0.) Q9 = A9*RB2**2/((R2 - R1)*(XL2 - XL1)*
     1                                (R4 - R3)*(XL4 - XL3))
      IF (NEXT .LT. 1) GO TO 135
      READ (10,6) F1, F2, DF
 6    FORMAT (3E)
      WRITE (LOU,33) F1, F2, DF
 33   FORMAT ('0FIRST FREQUENCY (KHZ) =', F8.3/
     1 '  LAST FREQUENCY (KHZ) =', F8.3/
     2 '  FREQUENCY STEP (KHZ) =', F8.3/1X)
C
 135  CALL CDISP (LOU)
      RBAR = .5*(R1 + R2)
      RB2 = RBAR**2
      RBAR = RBAR*CONV
      RC1 = CZNORM(1)
      RC2 = CZNORM(2)
      XLEN = CZNORM(4) - CZNORM(3)
      TN = XN1
      WRITE (LOU,44) V0, R0, C6, R6, R7, C7, R9
 44   FORMAT ('0ATTENUATOR PROPERTIES ARE :'/
     1 '0V0 =', 1PE13.5, ' R0 =', E13.5, ' C6 =', E13.5, ' R6 =',
     2 E13.5/18X, ' R7 =', E13.5, ' C7 =', E13.5, ' R9 =', E13.5)
      Q9 = A9*(RB2/((R2 - R1)*(XL2 - XL1)))**2
      NRIN = NCIN
      IF (NRIN .EQ. 0) GO TO 145
      DO 140 N=1,NRIN
        RIN(N) = XRIN(N)*RRB
        IF (XMIN(N) .EQ. 0.) XMIN(N) = 509.39792*XMUI(N)/XRHI(N)
        EMIN(N) = XMIN(N)*RB2
        PERMIN(N) = XMUI(N)
 140  CONTINUE
C
 145  NREX = NCEX
      IF (NREX .EQ. 0) GO TO 151
      DO 150 N=1,NREX
        REX(N) = XREX(N)*RRB
        IF (XMEX(N) .EQ. 0.) XMEX(N) = 509.39792*XMUX(N)/XRHX(N)
        EMEX(N) = XMEX(N)*RB2
        PERMEX(N) = XMUX(N)
 150  CONTINUE
C
 151  IF (NRIN .GT. 0) CALL CNDDSP (1, LOU)
      IF (NREX .GT. 0) CALL CNDDSP (2, LOU)
      NF = IFIX ((F2 - F1)/DF + 1.05)
      FOLD = 1.
      OMEGA = 6283.18531
```

MULTIPLE CYLINDRICAL CONDUCTORS
NONINTERACTIVE MAIN PROGRAM

```
      F = F1
      NF = MINO (NF, 20)
      DO 180 N=1,NF
        RATIO = F/FOLD
        IF (NRIN .EQ. 0) GO TO 160
        DO 155 I=1,NRIN
          EMIN(I) = EMIN(I)*RATIO
 155    CONTINUE
C
 160    IF (NREX .EQ. 0) GO TO 170
        DO 165 I=1,NREX
          EMEX(N) = EMEX(N)*RATIO
 165    CONTINUE
C
 170    WRITE (LOU,14) F
 7      FORMAT ('0ALPHA', 7X, 'Z1', 14X, 'Z2'/1X)
        OMEGA = OMEGA*RATIO
        ANGF(N) = OMEGA
        FREQ(N) = F
        ZRE = 0.
        ZIM = 1.
        CALL VOUT (VORL, VOIM, VOABS, VOARG)
        PHIAIR = VOARG*DEGPRA
        WRITE (LOU,12)
 12     FORMAT ('0FOR COIL IN AIR :')
        WRITE (LOU,11) VORL, VOIM, VOABS, VOARG, PHIAIR
 11     FORMAT ('0ATTENUATOR OUTPUT VOLTAGE'/' REAL =', 1PE13.5,
     1  ' IMAG =', E13.5/' MAGN =', E13.5, ' PHASE=', E13.5,
     2  ' RADIANS'/27X, E13.5, ' DEGREES')
        A2 = 1.
        A1 = 0.
        Z1 = 0.
        Z2 = 0.
        WRITE (LOU,7)
C
 172    IF (XL4 .EQ. XL2)
     1  CALL ADAP2 (A1, A2, GAUS2, QIDF, THRESH, TOL, S1, S2, CHAR)
        IF (XL4 .NE. XL2)
     1  CALL ADAP2 (A1, A2, GAUS2, DJCO, THRESH, TOL, S1, S2, CHAR)
        Z1 = Z1 + S1
        Z2 = Z2 + S2
        WRITE (LOU,8) A2, Z1, Z2, CHAR
 8      FORMAT (1X, F5.1, 1P2E16.7, 1X, A1)
        IF (ABS(S1/Z1) + ABS(S2/Z2) .LE. 5.E-7) GO TO 175
        A1 = A2
        A2 = A2 + 1.
        IF (A2 .LE. 30.) GO TO 172
C
 175    ZRE = -Z2/Q9
        ZNRMRE(N) = ZRE
        ZIM = (Z1 + Q9)/Q9
        ZNRMIM(N) = ZIM
        WRITE (LOU,9) ZRE, ZIM
 9      FORMAT ('0NORMALIZED IMPEDANCE  REAL =', 1PE14.5,
     1   ' IMAG =', E14.5)
```

MULTIPLE CYLINDRICAL CONDUCTORS
NONINTERACTIVE MAIN PROGRAM

```
        CALL VOUT (VORL, VOIM, VOABS, VOARG)
        DEGR = VOARG*DEGPRA
        DPHI = DEGR - PHIAIR
        WRITE (LOU,13)
 13     FORMAT ('0FOR COIL PLUS CONDUCTORS :')
        WRITE (LOU,11) VORL, VOIM, VOABS, VOARG, DEGR
        WRITE (LOU,16) DPHI
 16     FORMAT (14X, 'PHASE SHIFT =', 1PE13.5, ' DEGREES')
        FOLD = F
        F = F + DF
 180  CONTINUE
C
C          READ IN INFO FOR NEXT CASE
C
 190  READ (10,2) NEXT
      IF (NEXT .EQ. 0) STOP
      IF (NEXT .NE. 8) GO TO 100
      READ (10,10) V0, R0, C6, R6, R7, C7, R9
      WRITE (LOU,44) V0, R0, C6, R6, R7, C7, R9
      DO 200 N=1,NF
        F = FREQ(N)
        WRITE (LOU,14) F
 14     FORMAT ('0FREQUENCY (KHZ) =',F8.3)
        OMEGA = ANGF(N)
        ZRE = 0.
        ZIM = 1.
        CALL VOUT (VORL, VOIM, VOABS, VOARG)
        PHIAIR = VOARG*DEGPRA
        WRITE (LOU,12)
        WRITE (LOU,11) VORL, VOIM, VOABS, VOARG, PHIAIR
        ZRE = ZNRMRE(N)
        ZIM = ZNRMIM(N)
        CALL VOUT (VORL, VOIM, VOABS, VOARG)
        DEGR = VOARG*DEGPRA
        WRITE (LOU,13)
        WRITE (LOU,11) VORL, VOIM, VOABS, VOARG, DEGR
        DPHI = DEGR - PHIAIR
        WRITE (LOU,16) DPHI
 200  CONTINUE
      GO TO 190
      END
```

MULTIPLE CYLINDRICAL CONDUCTORS
NONINTERACTIVE MAIN PROGRAM

```
 BLOCK DATA
 COMMON /CNAME/ NMCP(11)
 DATA NMCP /2HR1, 2HR2, 2HL1, 2HL2, 2HR3, 2HR4, 2HL3, 2HL4,
1          2HN1, 2HN2, 2HXX/
 END
```

Subroutines for Multiconductor Problem

A. Numerical integration

ADAPT ADAP2	Adaptive integration routines
GAUSS GAUS2	Gaussian integration with 2, 4, 6, 8, or 10 points (same for simultaneous calculation of two integrals)

B. Special functions

CMDBES COMKB CMI	Modified Bessel Functions $I_0(z)$, $I_1(z)$, $K_0(z)$ and $K_1(z)$ of complex argument z.
BESI	Modified Bessel Functions $I_0(x)$ and $I_1(x)$ of real argument x
BESK	Modified Bessel Functions $K_0(x)$ and $K_1(x)$ of real argument x
XJJNT XIINT XKKNT	Integrals of first-order Bessel Functions $\int_{x_1}^{x_2} t \begin{matrix} J_1(t) \\ I_1(t) \\ K_1(t) \end{matrix} dt$, resp.

C. Calculation of required integrands

QIDF	Identical intermeshed coils in presence of internal and external conductors [this report, p. 20]
CINT	Identical intermeshed coils in air [this report, p. 20]
DJCO	Disjoint coils in the presence of multiple conductors [p. 20]
CITBLO	Disjoint coils in air [p. 20]
DEFINT	Defect and heat generation integrand [pp. 21-24]
UVMAT	Elements of the matrices U and V [Dodd, Cheng, and Deeds, J. Appl. Phys. *45*, 638 (1974); this report, pp. 6-8]
GCALC	Bessel function combinations for thin region [cf. Reference 3, pp. 69-76]

D. Calculation of coil and external circuit characteristics

COLAIR	Calculation of A_9, air normalization value
ATTEN	Interactive input of attenuator circuit parameters
VOUT	Calculation of attenuator output voltage [cf. Reference 3, pp. 108-111]

E. Input/Output

CDISP	Display coil parameters

CCHAN	Change coil parameters
CNDDSP	Display conductor parameters
CNDCHA	Change conductor parameters

F. Miscellaneous

MATCH	Search array for first occurrence of a given word
NORMCO	Normalize coil dimensions by dividing by mean radius of coil no. 1

Subroutine ADAPT

This subroutine computes an approximation to the integral

$$\int_{a_1}^{a_2} f(a)da$$

using an adaptive procedure. The basic numerical integration method is specified in the calling sequence; this method is used to generate a set of estimates of the integral until either convergence (as specified in the calling sequence) is reached, or until the maximum allowed number of estimates has been calculated. In the latter case, the interval is divided in half and the procedure repeated for each half. If convergence is not reached, the interval is further subdivided, until 10 such subdivisions have been done or until the interval size is made smaller than an allowed minimum ($S(a_2 - a_1)$, where S has the built-in value in this version of 1/512).

The output shown below is for the test problem

$$I = \int_0^5 \cos x dx = \sin (5)$$

with a convergence criterion of 5×10^{-8}; when the current estimate of the integral over a subinterval is smaller than 10^{-4}, the absolute value of the difference in successive estimates is examined; if larger, the relative change is used. In our test case, the estimates are computed with Gaussian integration with 2, 4, 6, 8 and 10 points. The requested convergence was not achieved for the entire interval, but one splitting was sufficient. The result labelled "EXACT" is the value of sin (5) computed in single-precision arithmetic on the PDP-10, and the result labelled "EXACT-APPROX" is the difference between the "EXACT" value and the result returned by ADAPT.

The calling sequence is shown in the following program fragment:

```
EXTERNAL COS, GAUSS
DATA THRESH /1.E - 4/, TOL /5.E - 8/
  .
  .
  .

CALL ADAPT (0., 5., GAUSS, COS, THRESH, TOL, ANS, CHAR)
  .
  .
  .
```

MULTIPLE CYLINDRICAL CONDUCTORS
SUBROUTINES

```
      SUBROUTINE ADAPT (A1, A2, METHD, FINT, THRESH, TOL,
     1 ANS, CHAR)
      EXTERNAL METHD, FINT
C
C        ADAPTIVE INTEGRATION OF FUNCTION FROM A1 TO A2, WITH THE
C        FUNCTION SPECIFIED BY THE FUNCTION SUBPROGRAM FINT AND THE
C        METHOD OF NUMERICAL INTEGRATION SPECIFIED BY THE SUBROUTINE
C        METHD. AN EXAMPLE OF THE USE OF ADAPT IS IN SUBROUTINE
C        COLAIR.
C
      DIMENSION AL(10), AR(10), NP(5)
      DATA SMULT /1.953125E-3/
      DATA NP /2, 4, 6, 8, 10/
      DATA KLIM /5/
      DATA PLUS, BLANK /1H+, 1H /
C
C        INITIALIZE CONVERGENCE FLAG, INTEGRATION LIMITS, LEVEL
C        INDEX AND TOTAL, AND COMPUTE MINIMUM ALLOWED STEP SIZE.
C
      CHAR = BLANK
      AL(1) = A1
      AR(1) = A2
      SMIN = SMULT*(A2 - A1)
      L = 1
      Q1 = 0.
C
C        COMPUTE FIRST ESTIMATE FOR CURRENT LEVEL
C
  100 CALL METHD (AL(L), AR(L), FINT, NP(1), T1)
C
C        COMPUTE ADDITIONAL ESTIMATES FOR THIS LEVEL, AND TEST
C        CONVERGENCE ON
C          (A) THE ABSOLUTE ERROR, IF THE NEWEST ESTIMATE IS
C              LESS THAN THRESH, OR
C          (B) THE RELATIVE ERROR.
C
      DO 105 K=2,KLIM
        KP = NP(K)
        CALL METHD (AL(L), AR(L), FINT, KP, S1)
        DS = ABS (S1 - T1)
        IF (ABS(S1) .GT. THRESH) DS = DS/ABS(S1)
        IF (DS .LT. TOL) GO TO 120
        T1 = S1
  105 CONTINUE
C
C        NO CONVERGENCE AT THIS LEVEL. SEE IF THERE ARE MORE.
C
      IF (L .EQ. 10) GO TO 130
C
C        SEE IF THE STEP SIZE IS BIGGER THAN THE MINIMUM ALLOWED.
C
      IF (AR(L) - AL(L) .LT. SMIN) GO TO 130
C
C        INCREASE LEVEL INDEX, ADJUST LIMITS
C
```

MULTIPLE CYLINDRICAL CONDUCTORS
SUBROUTINES

```
      L = L + 1
      AL(L) = AL(L-1)
      AR(L) = .5*(AL(L-1) + AR(L-1))
      GO TO 100
C
C        CONVERGED FOR LEVEL L. ADD CONTRIBUTION TO TOTAL, SEE IF
C        MORE LEVELS NEED TO BE DONE.
C
 120  Q1 = Q1 + S1
      IF (L .EQ. 1) GO TO 140
C
C        MORE LEVELS LEFT. DECREASE LEVEL INDEX, ADJUST LIMITS, AND
C        GO BACK FOR MORE.
C
      L = L - 1
      AL(L) = AR(L+1)
      GO TO 100
C
C        SET NONCONVERGENCE SIGNAL
C
 130  CHAR = PLUS
      GO TO 120
C
 140  ANS = Q1
      RETURN
      END
```

```
L = 1     AL(L) =  0.000000E+00     AR(L) =  5.000000E+00

 N        T1

 2 -5.0903112E-01
 4 -9.5817090E-01
 6 -9.5892414E-01
 8 -9.5892433E-01
10 -9.5892426E-01

L = 2     AL(L) =  0.000000E+00     AR(L) =  2.500000E+00

 N        T1

 2  5.9177476E-01
 4  5.9847154E-01
 6  5.9847213E-01
 8  5.9847217E-01
10  5.9847216E-01

L = 1     AL(L) =  2.500000E+00     AR(L) =  5.000000E+00

 N        T1

 2 -1.5399678E+00
 4 -1.5573948E+00
 6 -1.5573965E+00
 8 -1.5573964E+00

      EXACT       EXACT - APPROX

 -9.5892428E-01       7.451E-09
```

Subroutine ADAP2

This subroutine computes estimates of the integrals of two functions

$$S_i = \int_a^b f_i(x)dx \quad , \; i = 1,2$$

using an integration method specified in the calling sequence and the same adaptive method used for single integrands in subroutine ADAPT.

In the examples shown below

$a = 0, \quad b = 5$

$f_1(x) = \sin x, \quad f_2 = \cos x$

so that

$S_1 = 1 - \cos (5)$

$S_2 = \sin (5) \quad .$

The last line of the output shows the values of S_1 and S_2 as calculated in single-precision arithmetic on the PDP-10 and the relative differences between these values and the approximations to them.

The calling sequence is shown in the following program fragment:

```
EXTERNAL  GAUS2, FTRIG
DATA THRESH /1.E - 4/, TOL /5.E - 8/
  .
  .
  .

CALL ADAP2 (0., 5., GAUS2, FTRIG, THRESH, TOL, S1, S2, CHAR)
  .
  .
  .
END

SUBROUTINE FTRIG (F1,F2)
COMMON /ALPO/ ALFA, ALSQ, ALFO
F1 = SIN(ALFA)
F2 = COS(ALFA)
RETURN
END
```

MULTIPLE CYLINDRICAL CONDUCTORS
SUBROUTINES

```
      SUBROUTINE ADAP2 (A1, A2, METHD, FINT, THRESH, TOL,
     1 ANS1, ANS2, CHAR)
      EXTERNAL METHD, FINT
C
C         ADAPTIVE INTEGRATION OF TWO FUNCTIONS USING A METHOD
C         SPECIFIED BY SUBROUTINE METHD AND INTEGRANDS CALCULATED
C         BY SUBROUTINE FINT. FOR DETAILS OF THESE SUBROUTINES,
C         SEE SUBROUTINE GAUS2 AND QIDF, FOR EXAMPLE.
C
C         A MAXIMUM OF TEN LEVELS IS PERMITTED. CONVERGENCE WILL
C         BE TESTED ON
C           A) THE ABSOLUTE ERROR, IF THE ESTIMATE IS LESS THAN
C              THE INPUT VARIABLE THRESH, OR
C           B) THE RELATIVE ERROR, IF THE ESTIMATE IS GREATER THAN
C              THRESH. IN EITHER CASE, THE TWO MEASURES OF CHANGE
C           ARE ADDED TOGETHER AND THE SUM TESTED AGAINST THE
C           INPUT VARIABLE TOL.
C
C         WHEN THE SPECIFIED CONVERGENCE IS NOT REACHED, THE VARIABLE
C         CHAR WILL BE SET TO A PLUS SIGN; IF SATISFACTORY
C         CONVERGENCE IS REACHED, CHAR WILL CONTAIN A BLANK.
C
      DIMENSION AL(10), AR(10), NP(5)
      DATA SMULT /1.953125E-3/
      DATA NP /2, 4, 6, 8, 10/
      DATA KLIM /5/
      DATA PLUS, BLANK /1H+, 1H /
      CHAR = BLANK
      AL(1) = A1
      AR(1) = A2
      SMIN = SMULT*(A2 - A1)
C
C         INITIALIZE LEVEL COUNTER L AND TOTALS Q1 AND Q2
C
      L = 1
      Q1 = 0.
      Q2 = 0.
C
C         EVALUATE FIRST ESTIMATE FOR THIS LEVEL
C
  100 CALL METHD (AL(L), AR(L), FINT, NP(1), T1, T2)
C
C         GET REFINED ESTIMATES
C
      DO 105 K=2,KLIM
        KP = NP(K)
        CALL METHD (AL(L), AR(L), FINT, KP, S1, S2)
        DS1 = ABS (S1 - T1)
        IF (ABS(S1) .GT. THRESH) DS1 = DS1/ABS(S1)
        DS2 = ABS (S2 - T2)
        IF (ABS(S2) .GT. THRESH) DS2 = DS2/ABS(S2)
        IF (DS1 + DS2 .LT. TOL) GO TO 120
        T1 = S1
        T2 = S2
  105 CONTINUE
```

MULTIPLE CYLINDRICAL CONDUCTORS
SUBROUTINES

```
C
C         CONVERGENCE NOT REACHED. TEST FOR MORE LEVELS.
C
      IF (L .EQ. 10) GO TO 130
C
C         MORE LEVELS AVAILABLE. SEE IF THE STEP IS STILL LARGE ENOUGH.
C
      IF (AR(L) - AL(L) .LT. SMIN) GO TO 130
C
C         INCREASE LEVEL COUNTER AND SET NEW LIMITS
C
      L = L + 1
      AL(L) = AL(L-1)
      AR(L) = .5*(AL(L-1) + AR(L-1))
      GO TO 100
C
C         CONVERGENCE REACHED - ADD CONTRIBUTIONS TO TOTALS
C
 120  Q1 = Q1 + S1
      Q2 = Q2 + S2
C
C         SEE IF WE HAVE FINISHED
C
      IF (L .EQ. 1) GO TO 140
C
C         MORE LEVELS TO DO - REDUCE COUNTER AND RESET LIMITS
C
      L = L - 1
      AL(L) = AR(L+1)
      GO TO 100
C
C         NO CONVERGENCE FOUND - SET THE FLAG TO INDICATE THIS
C
 130  CHAR = PLUS
      GO TO 120
C
 140  ANS1 = Q1
      ANS2 = Q2
      RETURN
      END
```

```
L = 1     AL(L) =  0.000000E+00     AR(L) =  5.000000E+00

 N        T1              T2

  2  3.8025768E-01 -5.0903112E-01
  4  7.1577505E-01 -9.5817090E-01
  6  7.1633770E-01 -9.5892414E-01
  8  7.1633785E-01 -9.5892433E-01
 10  7.1633781E-01 -9.5892426E-01

L = 2     AL(L) =  0.000000E+00     AR(L) =  2.500000E+00

 N        T1              T2

  2  1.7809873E+00  5.9177476E-01
  4  1.8011416E+00  5.9847154E-01
  6  1.8011436E+00  5.9847213E-01
  8  1.8011436E+00  5.9847217E-01
 10  1.8011436E+00  5.9847216E-01

L = 1     AL(L) =  2.500000E+00     AR(L) =  5.000000E+00

 N        T1              T2

  2 -1.0726658E+00 -1.5399678E+00
  4 -1.0848046E+00 -1.5573948E+00
  6 -1.0848058E+00 -1.5573965E+00
  8 -1.0848058E+00 -1.5573964E+00

      A1              R1              A2              R2

  7.1633783E-01 -1.4901161E-08 -9.5892428E-01  7.4505806E-09


STOP

END OF EXECUTION
CPU TIME: 0.20  ELAPSED TIME: 1:10.03
EXIT
```

Subroutine GAUSS

The abscissas u_i and weights w_i for N-point Gaussian integration are stored (for N = 2,4,6,8 and 10) in the FORTRAN arrays U and W. We compute

$$\int_a^b F(x)dx = \frac{b-a}{2}\int_{-1}^{1} f(u)du \cong \frac{b-a}{2}\sum_{i=1}^{N} w_i f(u_i) = \frac{b-a}{2}\sum_{i=1}^{N/2} w_i[f(u_i) + f(-u_i)]$$

where

$$x = \frac{b-a}{2}u + \frac{b+a}{2}$$

$$f(u) = F(x(u)) \ ; \ x(-u) = b + a - x(u) \quad .$$

Rounding the abscissas and weights to nine figures gives results correct to eight significant figures for the integrals

$$I_k = \int_0^1 x^k dx = \frac{1}{k+1} \quad .$$

Let the N-point Gaussian approximation to I_k be $G_N(k)$; the relative error is then

$$\frac{G_N(k) - I_k}{I_k} = (k+1)G_N(k) - 1 \quad .$$

The attached results are for N = 2, 4, 6, 8 and 10, with k = 2N−1.

N	RELATIVE ERROR
2	−7.45E-09
4	−7.45E-09
6	−3.73E-08
8	−7.45E-09
10	−2.24E-08

Values of the integrand function F(x) are calculated by a FORTRAN function subprogram, which must be defined in the calling program as an external function. A calling program using the library function COS is shown in the discussion of ADAPT.

MULTIPLE CYLINDRICAL CONDUCTORS
SUBROUTINES

```
      SUBROUTINE GAUSS (A, B, F, N, ANS)
C
C        N-POINT GAUSSIAN INTEGRATION FROM A TO B OF
C        INTEGRAND CALCULATED BY FUNCTION SUBPROGRAM F.
C        N = 2, 4, 6, 8, OR 10. RESULT RETURNED IN ANS.
C
      DIMENSION U(15), W(15)
      DATA U/ .577350269, .339981044, .861136312, .238619186,
     1        .661209386, .932469514, .183434642, .525532410,
     2        .796666477, .960289856, .148874339, .433395394,
     3        .679409568, .865063367, .973906529/
      DATA W/ 1.,         .652145155, .347854845, .467913935,
     1        .360761573, .171324492, .362683783, .313706646,
     2        .222381034, .101228536, .295524225, .269266719,
     3        .219086363, .149451349, .0666713443/
      IT = N/2
      I1 = (IT*(IT - 1))/2
      I2 = I1 + IT
      I1 = I1 + 1
      BPLA = B + A
      ADD = BPLA*.5
      BMAO2 = (B - A)*.5
      SUM = 0.
      DO 100 I=I1,I2
        ALFA = ADD + BMAO2*U(I)
        SUM = SUM + W(I)*(F(ALFA) + F(BPLA - ALFA))
  100 CONTINUE
      ANS = SUM*BMAO2
      RETURN
      END
```

Subroutine GAUS2

This subroutine is a modification of subroutine GAUSS to allow simultaneous calculation of the Gaussian quadrature approximations to the integrals of two functions:

$$S_1 = \int_a^b f_1(x)dx$$

$$S_2 = \int_a^b f_2(x)dx$$

The integrands f_1 and f_2 are calculated by a subroutine which must be declared EXTERNAL in the calling program. An example of the use of GAUS2 is shown in the discussion of ADAP2.

The named COMMON block /ALPO/ contains values of α, α^2 and α^4 used in the computation of the integrands.

MULTIPLE CYLINDRICAL CONDUCTORS
SUBROUTINES

```
      SUBROUTINE GAUS2 (A, B, F, N, ANS1, ANS2)
C
C         SIMULTANEOUS N-POINT GAUSSIAN INTEGRATION OF
C         TWO INTEGRANDS COMPUTED BY SUBROUTINE F. N=2,4,6,8
C         OR 10, LIMITS OF INTEGRATION FROM A TO B.
C         RESULTS RETURNED IN ANS1 AND ANS2.
C
C         THE COMMON BLOCK /ALPO/ CONTAINS THE POWERS OF ALPHA
C         NECESSARY IN THE CALCULATION OF THE INTEGRANDS.
C
      COMMON /ALPO/ ALFA,ALSQ,ALFO
      DIMENSION U(15), W(15)
C
C        ABCISSAS
C
      DATA U /.577350269, .339981044, .861136312,
     1        .238619186, .661209386, .932469514,
     2        .183434642, .525532410, .796666477,
     3        .960289856, .148874339, .433395394,
     4        .679409568, .865063367, .973906529/
C
C        WEIGHTS
C
      DATA W /1.,         .652145155, .347854845,
     1        .467913935, .360761573, .171324492,
     2        .362683783, .313706646, .222381034,
     3        .101228536, .295524225, .269266719,
     4        .219086363, .149451349, .0666713443/
C
C        INITIALIZE COUNTERS AND TRANSFORMATION PARAMETERS
C
      IT = N/2
      I1 = (IT*(IT - 1))/2
      I2 = I1 + IT
      I1 = I1 + 1
      BPLA = B + A
      ADD = BPLA*.5
      BMAO2 = (B - A)*.5
      SUM1 = 0.0
      SUM2 = 0.0
C
C        SUM OF WEIGHTS TIMES FUNCTION VALUES
C
      DO 100 I=I1,I2
        ALFA = ADD + BMAO2*U(I)
        ALSQ = ALFA**2
        ALFO = ALSQ**2
        CALL F (S1,S2)
        ALFA = BPLA - ALFA
        ALSQ = ALFA**2
        ALFO = ALSQ**2
        CALL F (T1,T2)
        SUM1 = W(I)*(T1 + S1) + SUM1
        SUM2 = W(I)*(T2 + S2) + SUM2
  100 CONTINUE
```

MULTIPLE CYLINDRICAL CONDUCTORS
SUBROUTINES

```
C
C         NORMALIZE ANSWERS
C
      ANS1 = SUM1*BMAO2
      ANS2 = SUM2*BMAO2
      RETURN
      END
```

Subroutine CMDBES

We have adapted the subroutines described elsewhere[3] for the calculation of the modified Bessel functions of the first and second kinds of complex argument, $I_0(z)$, $I_1(z)$, $K_0(z)$ and $K_1(z)$. In our calculations the complex arguments are confined to the region $0 \leqslant \arg(z) \leqslant \pi/4$. We have compared the values computed with our subroutines for $\arg(z) = \pi/4$ with tabulated values of the Kelvin functions[6] and find good agreement.

MULTIPLE CYLINDRICAL CONDUCTORS
SUBROUTINES

```
      SUBROUTINE CMDBES(X,Y,F)
C
C          COMPUTES F(1) + J * F(2) = Z * I0(Z)
C           F(3) + J * F(4) = Z * K0(Z)
C           F(5) + J * F(6) = I1(Z)
C           F(7) + J * F(8) = K1(Z)
C          OF THE COMPLEX ARGUMENT Z = X + J * Y
C          WHERE J = SQRT(-1)
C
C         (ORNL-TM-4175, P. 82)
C
      DIMENSION F(8)
      R = SQRT(X*X + Y*Y)
      C1 = X/R
      S1 = Y/R
      PHI = ATAN(S1/C1)
      IF (R .GT. 8.0) GO TO 100
C
C          FOR R.LE.8 USE RATIONAL APPROXIMATION FOR K0(Z) AND K1(Z)
C          AND BACKWARD RECURRENCE FOR I0(Z) AND I1(Z)
C
      CALL COMKB (X,Y,BKZR,BKZI,BKOR,BKOI)
      F(3) = BKZR
      F(4) = BKZI
      F(7) = BKOR
      F(8) = BKOI
      CALL CMI (X,Y,BIZR,BIZI,BIOR,BIOI)
      F(1) = BIZR
      F(2) = BIZI
      F(5) = BIOR
      F(6) = BIOI
      GO TO 125
C
C          ASYMPTOTIC SERIES FOR R.GT.8
C
 100  F(2) = 0.
      F(4) = 0.
      F(6) = 0.
      F(8) = 0.
      F(1) = 1.
      F(3) = 1.
      F(5) = 1.
      F(7) = 1.
      ODD = 1.
      T = 1.
      U = 1.
      P = 1.
      SIGN = -1.
      V = .125/R
      C = C1
      S = S1
      L5 = 3 + 20./R
      DO 110 N=1,L5
        S6 = -ODD*ODD
        S7 = V/P
```

MULTIPLE CYLINDRICAL CONDUCTORS
SUBROUTINES

```
        T = S7*S6*T
        U = U*(4. + S6)*S7
        T1 = C*T
        F(1) = T1*SIGN + F(1)
        F(3) = T1 + F(3)
        T1 = -S*T
        F(2) = T1*SIGN + F(2)
        F(4) = T1 + F(4)
        T1 = C*U
        F(5) = T1*SIGN + F(5)
        F(7) = T1 + F(7)
        T1 = -S*U
        F(6) = T1*SIGN + F(6)
        F(8) = T1 + F(8)
        SIGN = -SIGN
        P = P + 1.
        ODD = ODD + 2.
        C2 = C*C1 - S*S1
        S = S*C1 + C*S1
        C = C2
 110  CONTINUE
      S6 = EXP(X)
      S7 = 1./S6
      T1 = SQRT(R)
      S6 = .39894228*S6/T1
      S7 = 1.25331413*S7/T1
C
C         THE ABOVE FACTORS ARE 1/SQRT(2*PI) AND SQRT(PI/2)
C
      ARG = .5*PHI
      C = COS(ARG)
      S = SIN(ARG)
C
C      MULTIPLY BY COS(PHI/2) - J * SIN(PHI/2) FROM 1/SQRT(Z)
C
      DO 115 N=2,8,2
        T = F(N-1)*C + F(N)*S
        F(N) = F(N)*C - F(N-1)*S
        F(N-1) = T
 115  CONTINUE
      C = COS(Y)
      S = SIN(Y)
C
C          MULTIPLY I FNS. BY S6*EXP(J*Y) AND K FNS. BY S7*EXP(-J*Y)
C
      DO 120 N=1,5,4
        T = F(N)*C - F(N+1)*S
        F(N+1) = S6*(F(N+1)*C + F(N)*S)
        F(N) = T*S6
        T = F(N+2)*C + F(N+3)*S
        F(N+3) = S7*(F(N+3)*C - F(N+2)*S)
        F(N+2) = T*S7
 120  CONTINUE
C
C         MULTIPLY ZERO-ORDER FUNCTIONS BY Z
```

MULTIPLE CYLINDRICAL CONDUCTORS
SUBROUTINES

```
C
 125  T = X*F(1) - Y*F(2)
      F(2) = F(1)*Y + F(2)*X
      F(1) = T
      T = X*F(3) - Y*F(4)
      F(4) = F(3)*Y + F(4)*X
      F(3) = T
      RETURN
      END
```

MULTIPLE CYLINDRICAL CONDUCTORS
SUBROUTINES

```
      SUBROUTINE COMKB (X, Y, BKZR, BKZI, BKOR, BKOI)
C
C        COMPUTES THE REAL AND IMAGINARY PARTS OF THE MODIFIED
C        BESSEL FUNCTIONS K0(Z) AND K1(Z), WHERE Z = X + I*Y,
C        BY THE METHOD OF Y.L. LUKE, THE SPECIAL FUNCTIONS
C        AND THEIR APPROXIMATIONS, VOL. 2, P. 229.
C
C        (ORNL-TM-4175, P. 85)
C
      DIMENSION P1ZE(16), P2ZE(16), P3ZE(16), Q1ZE(16)
      DIMENSION P1ON(16), P2ON(16), P3ON(16), Q1ON(16)
      DIMENSION RTEST(5), NTEST(5)
      DATA P1ZE /3*0.0
     1        ,-1.59863946,-1.91851852,-2.11452184
     2        ,-2.24917817,-2.34787879,-2.42347618
     3        ,-2.48328717,-2.53181273,-2.57198289
     4        ,-2.60579048,-2.63463947,-2.65954816
     5        ,-2.68127340/
      DATA P2ZE /3*0.0
     1        , .632653061, 1.07407407, 1.38016529
     2        , 1.6035503, 1.77333333, 1.90657439
     3        , 2.01385042, 2.10204082, 2.17580340
     4        , 2.2384, 2.29218107, 2.33888228
     5        , 2.3798127/
      DATA P3ZE /3*0.0
     1        ,-3.40136054E-02,-1.55555556E-01,-2.65643447E-01
     2        ,-3.54372124E-01,-4.25454545E-01,-4.83098217E-01
     3        ,-5.3056325E-01,-5.70228091E-01,-6.03820515E-01
     4        ,-6.32609524E-01,-6.575416E-01,-6.79334126E-01
     5        ,-6.9853933E-01/
      DATA Q1ZE /3*0.0
     1        , 1.63265306, 1.38271605, 1.19008264
     2        , 1.04142012, 9.24444444E-01, 8.30449827E-01
     3        , 7.53462604E-01, 6.89342404E-01, 6.35160631E-01
     4        , 5.888E-01, 5.48696845E-01, 5.13674197E-01
     5        , 4.82830385E-01/
      DATA P1ON /3*0.0
     1        ,-1.888888889,-2.09090909,-2.23076923
     2        ,-2.33333333,-2.41176471,-2.47368421
     3        ,-2.52380952,-2.56521739,-2.6
     4        ,-2.62962963,-2.65517241,-2.67741935
     5        ,-2.6969697/
      DATA P2ON /3*0.0
     1        , 7.77777778E-01, 1.18181818, 1.46153846
     2        , 1.66666667, 1.82352941, 1.94736842
     3        , 2.04761905, 2.13043478, 2.2
     4        , 2.25925926, 2.31034483, 2.35483871
     5        , 2.39393939/
      DATA P3ON /3*0.0
     1        , 1.11111111E-01,-9.09090909E-02,-2.30769231E-01
     2        ,-3.33333333E-01,-4.11764706E-01,-4.73684211E-01
     3        ,-5.23809524E-01,-5.65217391E-01,-.6
     4        ,-6.29629630E-01,-6.55172414E-01,-6.77419355E-01
     5        ,-6.96969697E-01/
      DATA Q1ON /3*0.0
```

MULTIPLE CYLINDRICAL CONDUCTORS
SUBROUTINES

```
     1        , 1.77777778, 1.45454545, 1.23076923
     2        , 1.06666667E 00, 9.41176471E-01, 8.42105263E-01
     3        , 7.61904762E-01, 6.95652174E-01, .64
     4        , 5.92592593E-01, 5.51724138E-01, 5.16129032E-01
     5        , 4.84848485E-01/
      DATA C/1.25331414/
      DATA RTEST/ 1., 4., 16., 36., 64./
      DATA NTEST/ 15, 10, 10, 6, 6/
C
C        FIND NTERM, THE NUMBER OF TERMS
C        WE ASSUME THE ARGUMENT HAS BEEN CHECKED TO INSURE THAT R.LE.8
C
      RSQ = X**2 + Y**2
      DO 100 I=2,5
        IT = I - 1
        IF (RSQ .LT. RTEST(I)) GO TO 105
 100  CONTINUE
C
 105  NTERM = NTEST(IT)
C
C        INITIALIZE FK-1, FK-2, AND FK-3 FOR N=0 AND N=1
C
      FKM3RZ = 1.
      FKM3RO = 1.
      PKM3RZ = 1.
      PKM3RO = 1.
      FKM3IZ = 0.
      FKM3IO = 0.
      PKM3IZ = 0.
      PKM3IO = 0.
      HX = X*16.
      FKM2RZ = (HX + 9.)/9.
      PKM2RZ = (HX + 7.)/9.
      FX = X* 3.20
      FKM2RO = FX + 1.
      PKM2RO = FKM2RO + 1.20
      FKM2IO = Y*3.20
      PKM2IO = FKM2IO
      HY = Y* 16.
      FKM2IZ = HY/9.
      PKM2IZ = FKM2IZ
      HYS = HY**2
      T = HX + 25.
      FKM1RZ = (HX*T + 75. - HYS)/75.
      PKM1IZ = HY*(HX + T)/75.
      T = HX + 23.
      PKM1RZ = (HX*T + 43. - HYS)/75.
      PKM1IZ = HY*(HX + T)/75.
      T = HX + 21.
      FKM1RO = (HX*T + 35. - HYS)/35.
      FKM1IO = HY*(HX + T)/35.
      T = HX + 27.
      PKM1RO = (HX*T + 131. - HYS)/35.
      PKM1IO = HY*(HX + T)/35.
C
```

MULTIPLE CYLINDRICAL CONDUCTORS
SUBROUTINES

```
C         BEGIN RECURRENCE
C
      DO 110 K = 3, NTERM
        KP1 = K + 1
C
C         CALCULATIONS OF FKRZ, FKIZ, PKRZ, AND PKIZ FOR N = 0
C
        P1 = P1ZE(KP1)
        P2 = P2ZE(KP1)
        P3 = P3ZE(KP1)
        Q1 = Q1ZE(KP1)
        HX = Q1*X
        HY = Q1*Y
        T1 = FKM1RZ + FKM2RZ
        T2 = FKM1IZ + FKM2IZ
        FKRZ = HX*T1 - P1*FKM1RZ - P2*FKM2RZ - HY*T2 - P3*FKM3RZ
        FKIZ = HX*T2 - P1*FKM1IZ - P2*FKM2IZ + HY*T1 - P3*FKM3IZ
        FKM3RZ = FKM2RZ
        FKM2RZ = FKM1RZ
        FKM1RZ = FKRZ
        FKM3IZ = FKM2IZ
        FKM2IZ = FKM1IZ
        FKM1IZ = FKIZ
        T1 = PKM1RZ + PKM2RZ
        T2 = PKM1IZ + PKM2IZ
        PKRZ = HX*T1 - P1*PKM1RZ - P2*PKM2RZ - HY*T2 - P3*PKM3RZ
        PKIZ = HX*T2 - P1*PKM1IZ - P2*PKM2IZ + HY*T1 - P3*PKM3IZ
        PKM3RZ = PKM2RZ
        PKM2RZ = PKM1RZ
        PKM1RZ = PKRZ
        PKM3IZ = PKM2IZ
        PKM2IZ = PKM1IZ
        PKM1IZ = PKIZ
C
C         CALCULATIONS OF FKRO, FKIO, PKRO, AND PKIO FOR N = 1
C
        P1 = P1ON(KP1)
        P2 = P2ON(KP1)
        P3 = P3ON(KP1)
        Q1 = Q1ON(KP1)
        HX = Q1*X
        HY = Q1*Y
        T1 = FKM1RO + FKM2RO
        T2 = FKM1IO + FKM2IO
        FKRO = HX*T1 - P1*FKM1RO - P2*FKM2RO - HY*T2 - P3*FKM3RO
        FKIO = HX*T2 - P1*FKM1IO - P2*FKM2IO + HY*T1 - P3*FKM3IO
        FKM3RO = FKM2RO
        FKM2RO = FKM1RO
        FKM1RO = FKRO
        FKM3IO = FKM2IO
        FKM2IO = FKM1IO
        FKM1IO = FKIO
        T1 = PKM1RO + PKM2RO
        T2 = PKM1IO + PKM2IO
        PKRO = HX*T1 - P1*PKM1RO - P2*PKM2RO - HY*T2 - P3*PKM3RO
```

```
      PKIO = HX*T2 - P1*PKM1IO - P2*PKM2IO + HY*T1 - P3*PKM3IO
      PKM3RO = PKM2RO
      PKM2RO = PKM1RO
      PKM1RO = PKRO
      PKM3IO = PKM2IO
      PKM2IO = PKM1IO
      PKM1IO = PKIO
 110  CONTINUE
C
C        EVALUATE CONSTANT TERM FOR K0(Z) AND K1(Z)
C        C IS SQUARE ROOT OF PI/2
C
      X2 = -X
      EMX = EXP(X2)
      D = SQRT(RSQ)
      C2 = EMX*C/D
      SR = COS(Y)
      TI = -SIN(Y)
      IF (Y .NE. 0.) GO TO 120
      IF (X .GE. 0.) GO TO 115
      HI = SQRT(X2)
      GR = 0.0
      GO TO 125
C
 115  GR = SQRT(X)
      HI = 0.
      GO TO 125
C
 120  GR = SQRT((X + D)*.5)
      HI = SQRT((X2 + D)*.5)
      IF (Y .GT. 0.) HI = -HI
C
 125  AR = C2*(GR*SR - HI*TI)
      BI = C2*(HI*SR + GR*TI)
C
C        CALCULATE K0(Z) = BKZR + BKZI*I
C
      DEN = FKRZ**2 + FKIZ**2
      UR = (PKRZ*FKRZ + PKIZ*FKIZ)/DEN
      VI = (PKIZ*FKRZ - PKRZ*FKIZ)/DEN
      BKZR = AR*UR - BI*VI
      BKZI = BI*UR + AR*VI
C
C        CALCULATE K1(Z) = BKOR + BKOI*I
C
      DEN = FKRO**2 + FKIO**2
      UR = (PKRO*FKRO + PKIO*FKIO)/DEN
      VI = (PKIO*FKRO - PKRO*FKIO)/DEN
      BKOR = AR*UR - BI*VI
      BKOI = BI*UR + AR*VI
      RETURN
      END
```

MULTIPLE CYLINDRICAL CONDUCTORS
SUBROUTINES

```
      SUBROUTINE CMI(X,Y,BIZR,BIZI,BIOR,BIOI)
C
C        COMPUTES THE REAL AND IMAGINARY PARTS OF THE MODIFIED BESSEL
C        FUNCTIONS OF THE FIRST KIND, I0(Z) AND I1(Z), Z = X + I*Y, BY
C        BACKWARD RECURRENCE
C
C        (ORNL-TM-4175, P. 90)
C
      DIMENSION FRE(52),FIM(52)
      DATA A,B/1.E-18,1.E-18/
C
C        CALCULATE N,THE NUMBER OF TERMS
C
      R = SQRT(X**2 + Y**2)
      N = 1.3*R + 9.
C
C        COMPUTE U AND V, REAL AND IMAG PARTS OF 2/Z
C
      T = Y/X
      U = 2./(T*Y + X)
      V = -U*T
C
C        INITIALIZE
C
      FRE(N+2) = 0.
      FIM(N+2) = 0.
      SRE = A
      FRE(N+1) = A
      SIM = B
      FIM(N+1) = B
      XN = FLOAT(N)
      TNUOZR = XN*U
      TNUOZI = XN*V
      NU = N + 1
C
C        BACKWARD RECURRENCE
C
      DO 135 K=1,N
        FRE(NU-1) = FRE(NU+1) + TNUOZR*FRE(NU) - TNUOZI*FIM(NU)
        SRE = FRE(NU-1) + SRE
        FIM(NU-1) = FIM(NU+1) + TNUOZR*FIM(NU) + TNUOZI*FRE(NU)
        SIM = FIM(NU-1) + SIM
        NU = NU - 1
        TNUOZR = TNUOZR - U
        TNUOZI = TNUOZI - V
 135  CONTINUE
C
C        ADJUST SUM
C
      SRE = SRE + SRE - FRE(1)
      SIM = SIM + SIM - FIM(1)
      T1 = SIM/SRE
      U1 = 1./(T1*SIM + SRE)
      V1 = -U1*T1
C
```

MULTIPLE CYLINDRICAL CONDUCTORS
SUBROUTINES

```
C         NORMALIZE
C
      EX = EXP(X)
      SY = SIN(Y)
      CY = COS(Y)
      FANRE = EX*(CY*U1 - SY*V1)
      FANIM = EX*(CY*V1 + SY*U1)
      BIZR = FANRE*FRE(1) - FANIM*FIM(1)
      BIZI = FANRE*FIM(1) + FANIM*FRE(1)
      BIOR = FANRE*FRE(2) - FANIM*FIM(2)
      BIOI = FANRE*FIM(2) + FANIM*FRE(2)
      RETURN
      END
```

Subroutine BESI

We have used the rational approximations developed by Blair and Edwards[7] to compute the modified Bessel functions of the first kind of real argument, $I_0(x)$ and $I_1(x)$.

MULTIPLE CYLINDRICAL CONDUCTORS
SUBROUTINES

```
      SUBROUTINE BESI (X, XIZRO, XIONE)
C
C        COMPUTES THE MODIFIED BESSEL FUNCTIONS I0(X) AND I1(X)
C        OF REAL ARGUMENT X, USING RATIONAL APPROXIMATIONS.
C           (J. M. BLAIR, AECL-4928, OCT. 1974)
C
C           TABLE 13, P.12 (I0(X), X .LE. 15)
C
      DATA P0, P1, P2, P3, P4, P5, P6, P7, P8, P9/
     1 .137394871E12, .335834006E11, .195725233E10, .481197766E08,
     2 .627000932E06, .487113418E04, .240359483E02, .773737707E-1,
     3 .157463530E-3, .193496966E-6/
      DATA Q0, Q1, Q2, Q3/
     1 .346485713E11,-.229970736E09, .693700416E06,-.115950647E04/
C
C           TABLE 29, P. 22 (I1(X), X .LE. 15)
C
      DATA R0, R1, R2, R3, R4, R5, R6, R7, R8, R9/
     1-.130304539E09,-.157394690E08,-.610953810E06,-.113886320E05,
     2-.121620389E03,-.819523728E00,-.367341959E-2,-.113297426E-4,
     3-.226143979E-7,-.340950565E-10/
      DATA S0, S1, S2/
     1-.893665937E08, .475582653E06,-.104386692E04/
C
C           TABLE 43, P.32 (I0(X), X .GT. 15)
C
      DATA T0, T1, T2/
     1 .468486946E00,-.117012345E01, .278005347E00/
      DATA U0, U1/
     1 .116422863E01,-.306426483E01/
C
C           TABLE 61, P. 43 (I1(X), X .GT. 15)
C
      DATA V0, V1, V2/
     1 .106280324E01,-.267327163E01, .113698557E01/
      DATA W0, W1/
     1 .273391652E01,-.577627341E01/
      IF (X .GT. 15.) GO TO 100
      Z = X**2
      Q = Z - 225.
      XIZRO = (P0 + Z*(P1 + Z*(P2 + Z*(P3 + Z*(P4 + Z*(P5 + Z*(P6 +
     1 Z*(P7 + Z*(P8 + Z*P9)))))))))/(Q0 + Q*(Q1 + Q*(Q2 + Q*(Q3 + Q))))
      XIONE = X*(R0 + Z*(R1 + Z*(R2 + Z*(R3 + Z*(R4 + Z*(R5 + Z*(R6 +
     1 Z*(R7 + Z*(R8 + Z*R9)))))))))/(S0 + Q*(S1 + Q*(S2 + Q)))
      RETURN
C
  100 Z = 1./X
      Q = SQRT(Z)*EXP(X)
      Z = Z - .0666666667
      XIZRO = Q*(T0 + Z*(T1 + Z*T2))/(U0 + Z*(U1 + Z))
      XIONE = Q*(V0 + Z*(V1 + Z*V2))/(W0 + Z*(W1 + Z))
      RETURN
      END
```

Subroutine BESK

We use the rational approximations developed by Russon and Blair[8] to compute the modified Bessel functions of the second kind of real argument, $K_0(x)$ and $K_1(x)$, and subroutine BESI to compute needed values of $I_0(x)$ and $I_1(x)$ for arguments in the range $0 \leqslant x \leqslant 1$. The user must test the argument before calling the subroutine; we make no test for negative or zero argument.

MULTIPLE CYLINDRICAL CONDUCTORS
SUBROUTINES

```
      SUBROUTINE BESK (X, XKZRO, XKONE)
C
C        MODIFIED BESSEL FUNCTIONS K0(X) AND K1(X) OF
C        REAL ARGUMENT X, USING RATIONAL APPROXIMATIONS.
C        (A. E. RUSSON AND J. M. BLAIR, AECL-3461, OCT. 1969)

C
      DATA Q0 /-4.21100684E1/
      DATA P0, P1, P2, P3, P4 /1.15931516E-1,  2.78982863E-1,
     1  2.52490595E-2, 3.45673143E-4,  1.53265946E-5/
      DATA R0, R1, R2       /1.29684595E+1,  3.28693873E00,
     1  1.10173127E-1/
      DATA V0, V1, V2, V3      /1.16185714E+2,  3.92399581E+2,
     1  3.09123840E+2, 4.78236536E+1/
      DATA S0, S1, S2, S3      /9.27027874E+1,  3.24677382E+2,
     1  2.80713014E+2, 5.71852878E+1/
      DATA T0, T1, T2, T3, T4 /4.35972688E00,  1.50242580E+1,
     1  1.38870631E+1, 3.64579096E00,  1.31176117E-1/
      DATA U0, U1, U2       /3.47855876E00,  1.06831663E+1,
     1  7.48153646E00/
      IF (X .GT. 1.) GO TO 100
      CALL BESI (X, XIZRO, XIONE)
      ZLOG = ALOG (X)
      Z = X*X
      XKZRO = P0 + Z*(P1 + Z*(P2 + Z*(P3 + Z*P4))) - ZLOG*XIZRO
      XKONE = ((R0 + Z*(R1 + Z*R2))/(Q0 + Z))*X + ZLOG*XIONE + 1./X
      RETURN
C
  100 Z = 1./X
      SXEX = SQRT(Z)*EXP(-X)
      XKZRO = SXEX*(V0 + Z*(V1 + Z*(V2 + Z*V3)))/
     1 (S0 + Z*(S1 + Z*(S2 + Z*(S3 + Z))))
      XKONE = SXEX*(T0 + Z*(T1 + Z*(T2 + Z*(T3 + Z*T4))))/
     1 (U0 + Z*(U1 + Z*(U2 + Z)))
      RETURN
      END
```

Function XJJNT

We have described elsewhere[2,3] our procedure for computing the function

$$J(r_2,r_1) = \int_{\alpha r_1}^{\alpha r_2} tJ_1(t)dt \quad .$$

We use the same procedure here with appropriate changes for the use of single-precision arithmetic on the PDP-10.

MULTIPLE CYLINDRICAL CONDUCTORS
SUBROUTINES

```
      FUNCTION XJJNT (X1, X2)
C
C        INTEGRAL OF X*J1(X) FROM X1 TO X2, DIVIDED BY
C        X2 - X1. USES POWER SERIES SUMMATION FOR X .LE. 5,
C        AND AN ASYMPTOTIC EXPANSION FOR X .GT. 5.
C
      DATA PIO4, EPS, KK /7.8539816E-1, 2.E-8, 50/, ITY /5/
      IF (X2 .GT. 5.) GO TO 300
      IFLAG = 0
C
C        POWER SERIES SUMMATION
C        (ORNL-TM-4175, PP. 51-54)
C
90    A = X1*.5
      A2 = A*A
      B = X2*.5
      B2 = B*B
      P1 = B - A
      C = B + A
      P2 = C*P1
      D = B*A
      QOLD = C*P2 - D*P1
      P4 = C*QOLD - D*P2
      Q = .5*(C*P4 - D*QOLD)
      C = B2 + A2
      D = B2*A2
      SUM = QOLD*.33333333
      RD = .5
      D2 = 6.
      E = D2
      SIGN = -1.
      TNP3 = 5.
      T = -Q/TNP3
      DO 100 K=1,KK
        SUM = T + SUM
        RD2 = 1./D2
        QNEW = (C*Q - D*QOLD*RD)*RD2
        SIGN = -SIGN
        TNP3 = TNP3 + 2.
        T = SIGN*QNEW/TNP3
        IF (ABS(T/SUM) .LT. EPS) GO TO 105
        QOLD = Q
        Q = QNEW
        RD = RD2
        D2 = D2 + E
        E = E + 2.
100   CONTINUE
      WRITE (ITY,1) KK, X1, X2, T, SUM
1     FORMAT ('0XJJNT DID NOT CONVERGE IN', I3, ' TERMS'/
     1 ' X =', 1PE14.5, 'X2 =', E14.5, ' T =', E14.5, ' SUM =', E14.5)
      STOP
C
105   XJJNT = 4.*(SUM + T)/(X2 - X1)
      IF (IFLAG .EQ. 0) RETURN
      GO TO 320
```

MULTIPLE CYLINDRICAL CONDUCTORS
SUBROUTINES

```
C
300   IGO = 1
      XX = X2
C
C        ASYMPTOTIC SERIES
C        (ORNL-TM-3295, P. 259)
C
305   RX = 1./XX
      ARG = XX - PIO4
      Q1 = ((((-188.1357*RX + 109.1142)*RX - 23.79333)*RX + 2.050931)
     1 *RX - .1730503)*RX + .7034845)*RX - 6.4109E-5
      Q2 = ((((-5.817517*RX + 2.105874)*RX - .6896196)*RX +
     1 .4952024)*RX - 1.87344E-3)*RX + .7979095
      P3 = 1. - SQRT(XX)*(Q2*COS(ARG) - Q1*SIN(ARG))
      IF (IGO .EQ. 2) GO TO 315
      IF (X1 .NE. 0.) GO TO 311
      XJJNT = P3/X2
      RETURN
C
311   XX = X1
      W = P3
      IGO = 2
      IF (XX .GT. 5.) GO TO 305
      IFLAG = 1
      TT = X2
      T1 = X1
      X2 = T1
      X1 = 0.
      GO TO 90
C
320   P3 = XJJNT*T1
      X1 = T1
      X2 = TT
C
315   XJJNT = (W - P3)/(X2 - X1)
      RETURN
      END
```

MULTIPLE CYLINDRICAL CONDUCTORS
SUBROUTINES

```
      FUNCTION XIINT (X1,X2,KK)
C
C        COMPUTES INTEGRAL FROM X1 TO X2 OF X*I1(X).
C        FOR X2.LE.5, METHOD USED IS
C        BY SUMMING A POWER SERIES EXPRESSION UNTIL THE
C        LAST INCLUDED TERM IS LESS THAN 2.E-8 TIMES THE SUM.
C        IF THIS LIMIT IS NOT REACHED AFTER KK TERMS,
C        A MESSAGE WILL BE PRINTED AND THE PROGRAM STOPPED.
C
C        (ORNL-TM-4175, PP. 51-56)
C
      DATA X5 / 1.0435068E2/
      DATA ITY /5/
C
C        X5 IS THE INTEGRAL FROM 0 TO 5.
C
C        CHECK SIZE OF X2
C
      IF (X2 .GT. 5.) GO TO 300
C
C        INITIALIZE TERMS IN SUM,DENOMINATORS,ETC.
C
      IFLAG = 0
C
 90   A = X1*.5
      A2 = A**2
      B = X2*.5
      B2 = B**2
      P1 = B - A
      C = B + A
      P2 = C*P1
      D = B*A
      QOLD = C*P2 - D*P1
      P4 = C*QOLD - D*P2
      Q = .5*(C*P4 - D*QOLD)
      C = B2 + A2
      D = B2*A2
      SUM = QOLD/3.
      RD1 = .5
      D2 = 6.
      E = D2
      TNP3 = 5.
      T = Q/TNP3
C
C        BEGIN SUM
C
      DO 105 K=1,KK
        SUM = T + SUM
        RD2 = 1./D2
        QNEW = (C*Q - D*QOLD*RD1)*RD2
        TNP3 = TNP3 + 2.
        T = QNEW/TNP3
C
C        TEST CONVERGENCE
C
```

```
      IF (T/SUM .LT. 2.E-8) GO TO 110
      QOLD = Q
      Q = QNEW
      RD1 = RD2
      D2 = D2 + E
      E = E + 2.
 105  CONTINUE
C
C        PRINT NON - CONVERGENCE MESSAGE
C
      WRITE (ITY,1) KK,X1,X2,T,SUM
 1    FORMAT ('0XIINT DID NOT CONVERGE IN',I3,' TERMS'/
     1' X1 =',1PE14.5,' X2 =',E14.5,' T=',E14.5,' SUM =',E14.5)
      STOP
C
 110  XIINT = 4.*(SUM + T)
      IF (IFLAG .EQ. 0) RETURN
      GO TO 320
C
C        ASYMPTOTIC SERIES FOR X2.GT.5
C        (ORNL TM - 3295, P.262)
C
 300  XX = X2
      IGO = 1
C
 305  RX = 1./XX
      P3 = ((((((1660.794*RX - 1737.556)*RX + 543.6694)*RX
     1 + 11.31804)*RX - 33.78366)*RX+5.108402)*RX-0.6130935)*RX
     2- 0.3360836)*RX + 0.3987795
      P3 = P3*EXP(XX)*SQRT(XX)
      GO TO (310, 315), IGO
C
 310  IF (X1 .NE. 0.) GO TO 311
      XIINT = P3
      RETURN
C
 311  XX = X1
      W = P3
      IGO = 2
      IF (XX .GT. 5) GO TO 305
      IFLAG = 1
      TT = X2
      X2 = 5.
      GO TO 90
C
 320  P3 = X5 - XIINT
      X2 = TT
C
 315  XIINT = W - P3
      RETURN
      END
```

Function XKKNT

The function $K(r_2,r_1)$ is[9]

$$K(r_2,r_1) = \int_{\alpha r_1}^{\alpha r_2} tK_1(t)dt = \int_{\alpha r_1}^{\infty} tK_1(t)dt - \int_{\alpha r_2}^{\infty} tK_1(t)dt \ .$$

We integrate by parts to obtain

$$\int_{x}^{\infty} tK_1(t)dt = xK_0(x) + \int_{x}^{\infty} K_0(t)dt \ .$$

The function

$$Ki_1(x) = \int_{x}^{\infty} K_0(t)dt$$

was first tabulated by Bickley and Nayler;[10] rational approximations have been obtained by Gargantini and Pomentale.[11] In addition, we use the rational approximations for the modified Bessel functions $K_0(x)$ and $I_0(x)$ given by Russon and Blair.[8]

MULTIPLE CYLINDRICAL CONDUCTORS
SUBROUTINES

```
      FUNCTION XKKNT (X1,X2)
C
C        COMPUTES INTEGRAL FROM X1 TO X2 OF X*K1(X)
C        USES FUNCTION KI1(X) DEFINED BY BICKLEY,
C        W.G. BICKLEY AND J. NAYLER, PHIL. MAG. V7, 343(1935).
C        RATIONAL APPROXIMATIONS USED FOR THIS FUNCTION, KI1(X),
C        I. GARGANTINI AND T. POMENTALE, COMM. ACM V7, 727(1964).
C
      IT = 1
      X = X1
C
 100  CONTINUE
      IF (X .EQ. 0.) GO TO 115
      EMX = EXP(-X)
      P6X = ((((((1.21483775E1*X + 4.1441359E1)*X + 2.42826912E1)*X +
     1 2.8385012)*X + 0.573686783E-1)*X + 0.14675888E-3)*X +
     2 0.243799709E-7
      Q7X = (((((((9.69335495*X + 4.39529819E1)*X + 5.257424655E1)*X
     1 + 1.97122604E1)*X + 1.93009367)*X + 0.369690054E-1)*X +
     2 0.935368997E-4)*X + 0.155208395E-7
      CONST = SQRT(1.0 + X)*P6X/Q7X
      IF (X .GT. 1.) GO TO 105
C
C        FOR X.LE.1, USE RATIONAL APPROXIMATION IN XSQ,
C        APPROX. 20, P.17 (AECL-3461) AND APPROX. 64, P.26 (AECL-3461)
C
      XX = X*X
      PNXSQ =  (-4.99050794E-1*XX -8.47504734)*XX - 3.57003303
      QMXSQ =  XX - 3.0794299E1
      PRXSQ =  (-3.26458559E-1*XX - 8.21942355)*XX - 3.6877891E1
      QSXSQ = XX - 3.68778895E1
      BK0 = PNXSQ/QMXSQ - (PRXSQ/QSXSQ)*ALOG(X)
      S = X*BK0 + EMX*CONST
      GO TO 110
C
C        FOR X.GT.1, USE RATIONAL APPROXIMATION IN 1/X,
C        APPROX. 101, P.33  (AECL-3461)
C
 105  CONTINUE
      ONX = 1./X
      PNONX = (3.65317216E1*ONX + 1.36255105E2)*ONX +7.56334204E1
      QMONX = ((ONX + 3.94576473E1)*ONX + 1.16258716E2)*ONX +
     1 6.03507352E1
      CONS2 = SQRT(X)*PNONX/QMONX
      S = EMX*(CONS2 + CONST)
C
 110  CONTINUE
      F = S
      GO TO 120
C
 115  F = 1.57079633
C
 120  CONTINUE
      IF (IT .EQ. 2) GO TO 125
      IT = 2
```

MULTIPLE CYLINDRICAL CONDUCTORS
SUBROUTINES

```
      X = X2
      F1 = F
      GO TO 100
C
  125 XKKNT = F1 - F
      RETURN
      END
```

Subroutine QIDF

This subroutine calculates the frequency-dependent part of the integrand for identical, intermeshed coils in the presence of multiple internal and external conductors.

We define (cf. Eq. 76, p. 20)

$$Q(\alpha) = \frac{2[1 - \cos \alpha(l_2 - l_1)]}{\alpha^2(l_2 - l_1)^2} \cdot$$

$$\frac{U_{12}V_{11}I^2(r_2,r_1) + U_{22}V_{21}K^2(r_2,r_1) + 2U_{12}V_{21}I(r_2,r_1)K(r_2,r_1)}{\alpha^2(r_2 - r_1)^2[U_{22}V_{11} - U_{12}V_{21}]} \quad .$$

Let

$$x = \alpha(l_2 - l_1) \ ;$$

the first factor is

$$\frac{2(1 - \cos x)}{x^2} = \left[\frac{\sin \frac{x}{2}}{\frac{x}{2}}\right]^2 \quad .$$

The numerator of the second factor is

$$U_{12}V_{11}I^2(r_2,r_1) + U_{22}V_{21}K^2(r_2,r_1) + 2U_{12}V_{21}I(r_2,r_1)K(r_2,r_1)$$

$$= U_{12}I(r_2,r_1)[V_{11}I(r_2,r_1) + V_{21}K(r_2,r_1)]$$

$$+ V_{21}K(r_2,r_1)[U_{22}K(r_2,r_1) + U_{12}I(r_2,r_1)] \quad .$$

The FORTRAN arrays UCOL and VCOL contain the real and imaginary parts of the matrix elements:

UCOL(1) = ReU_{12}	VCOL(1) = ReV_{11}
UCOL(2) = ImU_{12}	VCOL(2) = ImV_{11}
UCOL(3) = ReU_{22}	VCOL(3) = ReV_{21}
UCOL(4) = ImU_{22}	VCOL(4) = ImV_{21}

The matrix elements are calculated in subroutine UVMAT, called for the U and V matrices.

The remainder of the subroutine computes the real and imaginary parts of the integrand and returns them as BZ1 and BZ2.

MULTIPLE CYLINDRICAL CONDUCTORS
SUBROUTINES

```
      SUBROUTINE QIDF (BZ1, BZ2)
C
C        COMPUTES FREQUENCY-DEPENDENT INTEGRAND FOR INTERMESHED
C        IDENTICAL COILS (EQ. 72, P. 645)
C        (DODD, CHENG AND DEEDS, J. APPL. PHYS. 45,638(1974))
C
      COMMON /ALPO/ ALFA, ALSQ, ALFO
      COMMON /REGION/ R(10), EM(11), PERM(11), KLIM
      COMMON /REGINT/ RIN(10), EMIN(10), PERMIN(10), NRIN
      COMMON /REGEXT/ REX(10), EMEX(10), PERMEX(10), NREX
      COMMON /TEMPS/ A(40)
      REAL L1,L2
      COMMON /COILS/ R1,R2,L1,L2,OTHER(4)
      EQUIVALENCE (X1,A(1)), (X2,A(2)), (X,A(3)), (XH,A(4)),
     1 (X3,A(5)), (C1,A(6)), (C2,A(7)), (Z1,A(8)),
     2 (Z2,A(9)), (X4,A(10))
      DIMENSION UCOL(4), VCOL(4)
      RALS = 1./ALSQ
      X1 = ALFA*R1
      X2 = ALFA*R2
      RDX = 1./(X2 - X1)
      XI = RDX*XIINT(X1,X2,50)
      XK = RDX*XKKNT(X1,X2)
      X = ALFA*(L2 - L1)
      XH = X*.5
      SAL = (SIN(XH)/XH)**2
C
C        SET UP U MATRIX FOR NO EXTERNAL CONDUCTORS
C
      UCOL(3) = 1.
      UCOL(1) = 0.
      UCOL(2) = 0.
      UCOL(4) = 0.
C
C        CALCULATE U MATRIX FOR EXTERNAL CONDUCTORS (IF ANY)
C        (FLAG INN FOR UVMAT = 1)
C
      IF (NREX .NE. 0) CALL UVMAT (1, UCOL)
C
C        SET UP V MATRIX FOR NO INTERNAL CONDUCTORS
C
      VCOL(1) = 1.
      VCOL(2) = 0.
      VCOL(3) = 0.
      VCOL(4) = 0.
C
C        CALCULATE V MATRIX FOR INTERNAL CONDUCTORS (IF ANY)
C        (FLAG INN FOR UVMAT = 0)
C
      IF (NRIN .NE. 0) CALL UVMAT (0, VCOL)
C
C        COMPUTE BZ1 AND BZ2, THE REAL AND IMAGINARY PARTS
C        OF THE INTEGRAND.
C
      X1 = VCOL(3)*XK
```

```
      X2 = VCOL(4)*XK
      C1 = VCOL(1)*XI + X1
      C2 = VCOL(2)*XI + X2
      X3 = UCOL(1)*XI
      X4 = UCOL(2)*XI
      Z1 = X3*C1 - X4*C2
      Z2 = X3*C2 + X4*C1
      C1 = UCOL(3)*XK + X3
      C2 = UCOL(4)*XK + X4
      Z1 = Z1 + X1*C1 - X2*C2
      Z2 = Z2 + X1*C2 + X2*C1
C
C        EVALUATE DENOMINATOR U(2,2)V(1,1) - U(2,1)V(1,2)
C
      C1 = UCOL(3)*VCOL(1) - UCOL(4)*VCOL(2) - UCOL(1)*VCOL(3)
     1   + UCOL(2)*VCOL(4)
      C2 = UCOL(3)*VCOL(2) + UCOL(4)*VCOL(1) - UCOL(1)*VCOL(4)
     1   - UCOL(2)*VCOL(3)
      X = C2/C1
      X1 = 1./(C1 + X*C2)
      X2 = -X1*X
      C1 = SAL*RALS
      BZ2 = C1*(X1*Z2 + X2*Z1)
      BZ1 = C1*(X1*Z1 - X2*Z2)
      RETURN
      END
```

Function CINT

The integrand function for two identical, intermeshed coils in air is (cf. Eq. 76, p. 20).

$$\left[\frac{J(r_2,r_1)}{\alpha(r_2-r_1)}\right]^2 \frac{\alpha(l_2-l_1)+e^{-\alpha(l_2-l_1)}-1}{[\alpha(l_2-l_1)]^2} \frac{d\alpha}{\alpha^2} .$$

We let

$$x = \alpha(l_2-l_1)$$

and write the second factor as

$$v(x) = \frac{x+e^{-x}-1}{x^2} .$$

To avoid loss of significant figures for small x, we use the rational approximation

$$v(x) \cong \tfrac{1}{2} \frac{1260-60x+15x^2-x^3}{1260+360x+30x^2} ,$$

for values of x less than 0.4. Since e^{-x} is less than 10^{-9} for x greater than 20, we compute the exponential only for $0.4 \leqslant x \leqslant 20$, since in single-precision arithmetic on the PDP-10,

$$1-a = 1$$

for $a \leqslant 10^{-9}$. We compute the function

$$\frac{J(r_2,r_1)}{\alpha(r_2-r_1)} = \frac{1}{\alpha(r_2-r_1)} \int_{\alpha r_1}^{\alpha r_2} tJ_1(t)dt$$

in the function subprogram XJJNT.

MULTIPLE CYLINDRICAL CONDUCTORS
SUBROUTINES

```
      FUNCTION CINT (ALFA)
C
C        AIR PARAMETER, A9,
C        INTEGRAND FOR IDENTICAL INTERMESHED COILS IN AIR.
C        SEE DODD, DEEDS AND CHENG, J. APPL. PHYS 45,645(1974),
C        EQ. 72.
C
      COMMON /COILS/ R1, R2, L1, L2, OTHER(4)
      REAL L1, L2
      X = ALFA*(L2 - L1)
      IF (X .LT. .4) GO TO 100
      VAL = 1./X
      T = 1.
      IF (X .LE. 20.) T = T - EXP(-X)
      VAL = VAL*(1. - VAL*T)
      GO TO 200
C
100   VAL = (630. - X*(30. - X*(7.5 - X*.5)))/
     1      (1260. + X*(360. + X*30.))
C
200   X1 = ALFA*R1
      X2 = ALFA*R2
      CINT = VAL*(XJJNT(X1, X2)/ALFA)**2
      RETURN
      END
```

Subroutine DJCO

For coil 2 below coil 1 and in a different radial region (Fig. 4, p. 16) the mutual impedance is (Eq. 67, p. 17)

$$j\omega M_{12} = j\omega 2 n_1 n_2 \mu_0 \int_0^\infty \frac{\cos\alpha(l_4 - l_2) + \cos\alpha(l_3 - l_1) - \cos\alpha(l_4 - l_1) - \cos\alpha(l_3 - l_2)}{\alpha^2(l_4 - l_3)(l_2 - l_1)}$$

$$\times \frac{[V_{11}I(r_4,r_3) + V_{21}K(r_4,r_3)][U_{12}I(r_2,r_1) + U_{22}K(r_2,r_1)]}{\alpha^2(r_4 - r_3)(r_2 - r_1)(U_{22}V_{11} - U_{12}V_{21})} \frac{d\alpha}{\alpha^2} .$$

(We have assumed that $\alpha_0 = \alpha$.)

When there are no conductors present, the matrices U and V are unit matrices, and the mutual impedance is

$$j\omega M_{12}^{(air)} = j\omega 2 n_1 n_2 \mu_0 \int_0^\infty v(\alpha) \frac{I(r_4,r_3)K(r_2,r_1)}{\alpha^2(r_4 - r_3)(r_2 - r_1)} \frac{d\alpha}{\alpha^2}$$

where $v(\alpha)$ is the term with the four cosines in the numerator. For the conductors, the contribution to the mutual impedance is obtained by subtracting the air part from the total:

$$j\omega M_{12}^{(cond)} = j\omega 2 n_1 n_2 \mu_0 \int_0^\infty v(\alpha) G(\alpha) \frac{d\alpha}{\alpha^2}$$

with

$$G(\alpha) = \frac{U_{12}I(r_4,r_3)[V_{11}I(r_2,r_1) + V_{21}K(r_2,r_1)] + V_{21}K(r_4,r_3)[U_{12}I(r_2,r_1) + U_{22}K(r_2,r_1)]}{\alpha^2(r_4 - r_3)(r_2 - r_1)(U_{22}V_{11} - U_{12}V_{21})} .$$

When the coils are in the same radial region (Fig. 5, p. 19), the integrand for the contribution from the conductors is (Eq. 72, p. 20) the same. Thus, we can use one subroutine for calculating the integrand, whether the coils are in the same radial region or not.

The function $v(\alpha)$ is

$$v(\alpha) = \frac{\cos\alpha(l_4 - l_2) + \cos\alpha(l_4 - l_1) - \cos\alpha(l_4 - l_1) - \cos\alpha(l_3 - l_2)}{\alpha^2(l_4 - l_3)(l_2 - l_1)} .$$

Using trigonometric identities for sums and differences of sines and cosines, we can write $v(\alpha)$ in a somewhat more convenient form:

$$v(\alpha) = \frac{\sin \alpha t_2/2}{\alpha t_2/2} \frac{\sin \alpha t_1/2}{\alpha t_1/2} \cos \alpha d_{12}$$

where

$t_1 = l_2 - l_1$, the normalized thickness of coil 1;

$t_2 = l_4 - l_3$, the normalized thickness of coil 2;

and

$$d_{12} = \frac{l_1 + l_2}{2} - \frac{l_3 + l_4}{2} \quad ,$$

the normalized distance from the midplane of coil 1 to the midplane of coil 2.

In the subroutine we use the rational approximation

$$\frac{\sin x}{x} \cong 1 - \frac{x^2}{6} \; \frac{70 - 11\left(\frac{x^2}{6}\right)}{70 + 10\left(\frac{x^2}{6}\right)}$$

which provides about 8-figure accuracy for $x \leqslant 0.46$.

MULTIPLE CYLINDRICAL CONDUCTORS
SUBROUTINES

```
      SUBROUTINE DJCO (BZ1, BZ2)
C
C         COMPUTES THE INTEGRAND FOR DISJOINT COILS (EQ. 65, P. 644)
C         (DODD, DEEDS AND CHENG, J. APPL. PHYS. 45, 638 (1974))
C
      COMMON /ALPO/ ALFA, ALSQ, ALFO
      COMMON /REGION/ R(10), EM(11), PERM(11), KLIM
      COMMON /REGINT/ RIN(10), EMIN(10), PERMIN(10), NRIN
      COMMON /REGEXT/ REX(10), EMEX(10), PERMEX(10), NREX
      COMMON /TEMPS/ A(40)
      COMMON /COILS/ R1, R2, XL1, XL2, R3, R4, XL3, XL4
      DIMENSION UCOL(4), VCOL(4)
C
C         U AND V MATRIX ELEMENTS ARE STORED AS FOLLOWS:
C         UCOL(1) = RE (U(1,2)), VCOL(1) = RE (V(1,1))
C         UCOL(2) = IM (U(1,2)), VCOL(2) = IM (V(1,1))
C         UCOL(3) = RE (U(2,2)), VCOL(3) = IM (V(2,1))
C         UCOL(4) = IM (U(2,2)), VCOL(4) = IM (V(2,1))
C
C         (EQS. 37-40, P. 641, DODD, DEEDS AND CHENG, LOC. CIT.)
C
      EQUIVALENCE (A(1), X), (A(2), T), (A(3), HALF), (A(4), RDX),
     1 (A(5), X1), (A(6), X2), (A(7), Z1), (A(8), Z2),
     2 (A(9), Z1), (A(10),Z2)
C
C         COMPUTE THE COMBINATION OF TRIG FUNCTIONS V AND THE
C         BESSEL FUNCTION INTEGRALS
C
      HALF = ALFA*.5
      X = HALF*(XL2 - XL1)
      IF (X .GT. .46) GO TO 100
      T = X*X*.166666667
      V = 1. - T*(70. - 11.*T)/(70. + 10.*T)
      GO TO 105
C
 100  V = SIN(X)/X
C
 105  X = HALF*(XL4 - XL3)
      IF (X .GT. .46) GO TO 110
      T = X*X*.166666667
      V = (1. - T*(70. - 11.*T)/(70. + 10.*T))*V
      GO TO 115
C
 110  V = (SIN(X)/X)*V
C
 115  V = V*COS(HALF*(XL4 + XL3 - XL2 - XL1))/ALSQ
      X = ALFA*R1
      T = ALFA*R2
      RDX = 1./(T - X)
      XK21 = RDX*XKKNT(X,T)
      XI21 = RDX*XIINT(X,T,50)
      X = ALFA*R3
      T = ALFA*R4
      RDX = 1./(T - X)
      XK43 = RDX*XKKNT(X,T)
```

MULTIPLE CYLINDRICAL CONDUCTORS
SUBROUTINES

```
      XI43 = RDX*XIINT(X,T,50)
C
C         CALCULATION OF U AND V MATRICES
C
C         SET UP U MATRIX FOR NO EXTERNAL CONDUCTORS
C
      UCOL(3) = 1.
      UCOL(1) = 0.
      UCOL(2) = 0.
      UCOL(4) = 0.
C
C        CALCULATE U MATRIX FOR EXTERNAL CONDUCTORS (IF ANY).
C
      IF (NREX .NE. 0) CALL UVMAT (1, UCOL)
C
C         SET UP V MATRIX FOR NO INTERNAL CONDUCTORS
C
 125  VCOL(1) = 1.
      VCOL(2) = 0.
      VCOL(3) = 0.
      VCOL(4) = 0.
C
C        CALCULATE V MATRIX FOR INTERNAL CONDUCTORS (IF ANY).
C
      IF (NRIN .NE. 0) CALL UVMAT (0, VCOL)
C
C         COMPUTE BZ1 AND BZ2, THE REAL AND IMAGINARY PARTS
C         OF THE INTEGRAND. START WITH THE NUMERATOR.
C
 135  X1 = VCOL(1)*XI21 + VCOL(3)*XK21
      X2 = VCOL(2)*XI21 + VCOL(4)*XK21
      Z1 = XI43*(UCOL(1)*X1 - UCOL(2)*X2)
      Z2 = XI43*(UCOL(1)*X2 + UCOL(2)*X1)
      X1 = UCOL(1)*XI21 + UCOL(3)*XK21
      X2 = UCOL(2)*XI21 + UCOL(4)*XK21
      Z1 = Z1 + XK43*(VCOL(3)*X1 - VCOL(4)*X2)
      Z2 = Z2 + XK43*(VCOL(3)*X2 + VCOL(4)*X1)
C
C        NOW COMPUTE DENOMINATOR (U22*V11 - U12*V21)
C
      C1 = UCOL(3)*VCOL(1) - UCOL(4)*VCOL(2) - UCOL(1)*VCOL(3)
     1   + UCOL(2)*VCOL(4)
      C2 = UCOL(3)*VCOL(2) + UCOL(4)*VCOL(1) - UCOL(1)*VCOL(4)
     1   - UCOL(2)*VCOL(3)
      X = C2/C1
      X1 = 1./(C1 + X*C2)
      X2 = -X*X1
      BZ1 = V*(X1*Z1 - X2*Z2)
      BZ2 = V*(X1*Z2 + X2*Z1)
      RETURN
      END
```

Subroutine CITBLO

When coil 2 is below coil 1 and the coils are in the same radial region (Fig. 5, p. 19), the mutual impedance of the coils with no conductors present is (Eq. 72, p. 20)

$$j\omega M_{12}^{(air)} =$$

$$j\omega 2 n_1 n_2 \mu_0 \frac{\pi}{2} \int_0^\infty \frac{J(r_4,r_3)J(r_2,r_1)}{\alpha^2(r_4-r_3)(r_2-r_1)} \frac{[e^{-\alpha(l_1-l_4)} + e^{-\alpha(l_2-l_3)} - e^{-\alpha(l_1-l_3)} - e^{-\alpha(l_2-l_4)}]}{\alpha^2(l_4-l_3)(l_2-l_1)} \frac{d\alpha}{\alpha^2} .$$

The integral for the air part when the coils are not in the same radial region (see discussion of subroutine DJCO) can be transformed into the above form by the transformation[12] given by

$$\int_0^\infty (\cos c\alpha)\ I_1(\alpha r)\ K_1(\alpha r') \frac{d\alpha}{\alpha^2} = -\frac{\pi}{2} \int_0^\infty e^{-c\alpha} J_1(\alpha r)\ J_1(\alpha r') \frac{d\alpha}{\alpha^2} .$$

Thus, we can use one subroutine for calculating the integrand for the coils in air, whether the coils are in the same region or not.

The term with exponential functions can be written in a somewhat more convenient form:

$$\omega(\alpha) = e^{-\alpha d_{12}} \frac{\sinh \alpha t_1/2}{\alpha t_1/2} \frac{\sinh \alpha t_2/2}{\alpha t_2/2}$$

where

$t_1 = l_2 - l_1$, the normalized thickness of coil 1;

$t_2 = l_4 - l_3$, the normalized thickness of coil 2;

and

$$d_{12} = \frac{l_1+l_2}{2} - \frac{l_3+l_4}{2} ,$$

the normalized distance from the midplane of coil 1 to the midplane of coil 2. In the subroutine we use the rational approximation

$$\frac{\sinh x}{x} \cong 1 + \frac{x^2}{6} \frac{210 + 58(\frac{x^2}{6})}{210 - 5(\frac{x^2}{6})}$$

which provides about 8-figure accuracy for $x \leqslant 0.25$.

MULTIPLE CYLINDRICAL CONDUCTORS
SUBROUTINES

```
      FUNCTION CITBLO (ALFA)
C
C         COMPUTES THE COIL INTEGRAND FOR THE CASE OF COIL
C         NO. 2 BELOW COIL NO. 1. SEE
C         DODD, DEEDS AND CHENG, J. APPL. PHYS. 45, 638 (1974),
C         FIG. 4, P. 639 AND EQ. 68, PP. 644-645.
C
      COMMON /COILS/ R1, R2, XL1, XL2, R3, R4, XL3, XL4
      DATA XLIM /.25/
      RALSQ = 1./ALFA**2
      X1 = ALFA*R1
      X2 = ALFA*R2
      X3 = ALFA*R3
      X4 = ALFA*R4
      T1 = XL2 - XL1
      T2 = XL4 - XL3
      D12 = .5*(XL1 + XL2 - XL3 - XL4)
      TEST = ALFA*(D12 - .5*(T1 + T2))
      IF (TEST .GT. 10.) GO TO 120
      HALF = .5*ALFA
      X = HALF*T1
      IF (X .GT. XLIM) GO TO 100
      T = X*X*.166666667
      V = 1. + T*(210. + 58.*T)/(210. - 5.*T)
      GO TO 105
C
 100  V = SINH(X)/X
C
 105  X = HALF*T2
      IF (X .GT. XLIM) GO TO 110
      T = X*X*.166666667
      V = V*(1. + T*(210. + 58.*T)/(210. - 5.*T))
      GO TO 115
C
 110  V = V*SINH(X)/X
C
 115  VAL = V*EXP(-ALFA*D12)
      GO TO 900
C
 120  VAL = EXP (-TEST)*RALSQ/(T1*T2)
C
 900  CITBLO = VAL*XJJNT(X1, X2)*XJJNT(X3, X4)*RALSQ
      RETURN
      END
```

Subroutine DEFINT

The integrands of the expressions for the change in the mutual impedance due to a defect are for coil 2 (we assume, as elsewhere, that $\alpha_0 = \alpha$):

$$\frac{\sin \alpha(z-l_3) - \sin \alpha(z-l_4)}{\alpha(l_4-l_3)} \frac{[V_{11}(n)I_1(\alpha_n r) + V_{21}(n)K_1(\alpha_n r)][U_{12}I(r_4,r_3) + U_{22}K(r_4,r_3)]}{(U_{22}V_{11} - U_{12}V_{21})\,\alpha(r_4-r_3)} \frac{d\alpha}{\alpha}$$

for a defect in the n-th internal conductor (Eq. 80, p. 21), and

$$\frac{\sin \alpha(z-l_3) - \sin \alpha(z-l_4)}{\alpha(l_4-l_3)} \frac{U_{12}(n^1)I_1(\alpha_n^1 r) + U_{22}(n^1)K_1(\alpha_n^1 r)}{U_{22}V_{11} - U_{12}V_{21}} \frac{V_{11}I(r_4,r_3) + V_{21}K(r_4,r_3)}{\alpha(r_4-r_3)} \frac{d\alpha}{\alpha}$$

for a defect in the n^1-th external conductor (Eq. 84, p.22). The integrands for coil number 1 are of the same form, with l_2, l_1, r_2 and r_1 appearing in place of l_4, l_3, r_4 and r_3. We use the subroutine UVMAT to calculate the matrix elements required in the above expressions, with the additional entry point UVPRT to calculate the partial products $U(n^1)$ or $V(n)$. The term involving the sine functions can be transformed into

$$\frac{\sin \alpha(z-l_3) - \sin \alpha(z-l_4)}{\alpha(l_4-l_3)} = \frac{\sin \alpha t_2/2}{\alpha t_2/2} \cos \alpha\left(z - \frac{l_4+l_3}{2}\right)$$

where $t_2 = l_4 - l_3$, the normalized thickness of coil 2. We use the same rational approximation as the one used in subroutine DJCO:

$$\frac{\sin x}{x} \cong 1 - \frac{x^2}{6} \frac{70 - 11(\frac{x^2}{6})}{70 + 10(\frac{x^2}{6})}$$

We use the subroutines BESI, BESK or CMDBES to calculate the Bessel functions.

The version of the main program discussed in this report does not include a calculation of either the effect of defects or of eddy current heating. These features will be added to a future version of the program, and detailed listings published in a future report.

Subroutine UVMAT

The matrices U and V are products of the transformation matrices T. We have described elsewhere[3] our procedure for calculating these matrices in REAL*8 arithmetic on the IBM 360/91; we have used the same subroutines here, with appropriate changes for single-precision arithmetic on the PDP-10.

MULTIPLE CYLINDRICAL CONDUCTORS
SUBROUTINES

```
      SUBROUTINE UVMAT (INN, VEC)
C
C        COMPUTES THE REAL AND IMAGINARY PARTS OF
C        U(1,2) AND U(2,2) FOR CONDUCTORS OUTSIDE COILS
C        V(1,1) AND V(2,1) FOR CONDUCTORS INSIDE COILS
C        SEE DODD, DEEDS AND CHENG, J. APPL. PHYS. 45,641(1974),
C        EQS. 30, 31, 33, AND 34.
C
      DIMENSION T(8), U(4), V(3), F(8), G(8), Z(8), VEC(4)
      COMMON /REGION/ R(10), EM(11), PERM(11), KLIM
      COMMON /REGEXT/ REX(10), EMEX(10), PERMEX(10), NREX
      COMMON /REGINT/ RIN(10), EMIN(10), PERMIN(10), NRIN
      COMMON /TEMPS/ A(40)
C
C        THE FOLLOWING EQUIVALENCE CONSERVES STORAGE.
C        THE ARRAY A IS USED FOR TEMPORARY STORAGE IN
C        SUBROUTINES CNDDSP, UVMAT, QIDF, AND DJCO.
C
      EQUIVALENCE (T(1),A(1)), (F(1),A(9)), (G(1),A(17)),
     1 (Z(1),A(25)), (U(1),A(33)), (V(1),A(37))
      COMMON /ALPO/ ALFA,ALSQ,ALFO
C
C         NREG     NUMBER OF CONDUCTORS
C         KLIM     ONE MORE THAN NREG
C         R(K)     INNER RADIUS OF OUTER CONDUCTOR, OR
C                  OUTER RADIUS OF INNER CONDUCTOR
C         EM(K)    OMEGA*MU(K)*SIGMA(K)*RBAR**2
C         PERM(K)  PERMEABILITY (MU)
C         K        REGION INDEX
C         ALFA     ALPHA, VARIABLE OF INTEGRATION
C         ALSQ      ALFA**2
C         ALFO      ALFA**4
C
C         INN=1 IS A FLAG INDICATING CONDUCTORS OUTSIDE COIL;
C         OTHERWISE CONDUCTORS ARE INSIDE COIL.
C
      ILRK = 0
C
C        ILRK = 0 TO PUT AIR INTO EXTRA REGION FOR FULL
C        MATRIX CALCULATION FOR ALL REGIONS.
C        ILRK = 1 TO USE ACTUAL PARAMETERS FOR PARTIAL MATRIX
C        CALCULATION ASSOCIATED WITH DEFECT IN A CONDUCTOR.
C        (ENTRY UVPRT)
C
C        INITIALIZE U FROM VEC.
C
 50   U(1) = VEC(1)
      U(2) = VEC(2)
      U(3) = VEC(3)
      U(4) = VEC(4)
C
C        REGION SELECTION
C
      IF (INN .NE. 1) GO TO 85
      DO 80 K=1,NREX
```

MULTIPLE CYLINDRICAL CONDUCTORS
SUBROUTINES

```
        R(K) = REX(K)
        EM(K) = EMEX(K)
        PERM(K) = PERMEX(K)
 80   CONTINUE
      KLIM = NREX + 1
      IF (ILRK .EQ. 1) GO TO 95
      EM(KLIM) = 0.
      PERM(KLIM) = 1.0
C
 85   IF (INN .NE. 0) GO TO 95
      DO 90 K=1,NRIN
        R(K) = RIN(K)
        EM(K) = EMIN(K)
        PERM(K) = PERMIN(K)
 90   CONTINUE
      KLIM = NRIN + 1
      IF (ILRK .EQ. 1) GO TO 95
      EM(KLIM) = 0.
      PERM(KLIM) = 1.0
C
 95   A1 = ALFA
      IF (EM(1) .NE. 0.) A1 = SQRT(.5*(ALSQ+SQRT(ALFO+EM(1)**2)))
      A2 = EM(1)/(A1 + A1)
C
C         A1 = RE(ALFA(1)), A2 = IM(ALFA(1))
C
      K = 2
C
C         BEGIN LOOP ON REGIONS
C
 100  B1 = A1*R(K-1)
      B2 = A2*R(K-1)
      IF (B2.NE.0.) GO TO 110
      CALL BEST (B1, Z(1), Z(5))
      CALL BESK (B1, Z(3), Z(7))
      Z(1) = Z(1)*B1
      Z(3) = Z(3)*B1
      Z(2) = 0.
      Z(4) = 0.
      Z(6) = 0.
      Z(8) = 0.
      GO TO 115
C
 110  CALL CMDBES (B1,B2,Z)
C
 115  A3 = ALFA
      IF (EM(K) .NE. 0.) A3 = SQRT(.5*(ALSQ+SQRT(ALFO+EM(K)**2)))
      A4 = EM(K)/(A3 + A3)
      IF (INN .NE. 1) GO TO 140
      IF (K .EQ. KLIM) GO TO 140
C
C         CHECK FOR THIN REGION, CONDUCTORS OUTSIDE COILS
C
      TREL = (R(K-1) - R(K))/R(K-1)
      IF (TREL .GT. .1) GO TO 140
```

MULTIPLE CYLINDRICAL CONDUCTORS
SUBROUTINES

```
C
C          THIN REGION - EVALUATE BESSEL FNS OF ALFA(K+1)*R(K)
C
      A5 = ALFA
      IF (EM(K+1) .NE. 0.) A5 = SQRT(.5*(ALSQ+SQRT(ALFO+EM(K+1)**2)))
      A6 = EM(K+1)/(A5 + A5)
      B5 = A5*R(K)
      B6 = A6*R(K)
      IF (B6 .NE. 0.) GO TO 130
      CALL BESI (B5, F(1), F(5))
      CALL BESK (B5, F(3), F(7))
      F(1) = F(1)*B5
      F(3) = F(3)*B5
      F(2) = 0.
      F(4) = 0.
      F(6) = 0.
      F(8) = 0.
      GO TO 135
C
 130  CALL CMDBES (B5,B6,F)
C
C          CALCULATE G FUNCTIONS
C
 135  CALL GCALC (A3,A4,K,G)
C
C          CALCULATE ELEMENTS OF T MATRIX AT R(K)
C
      C1 = PERM(K+1)/PERM(K)
      C2 = PERM(K)/PERM(K-1)
      C3 = C2*C1
      Z1 = Z(5)*G(1) - Z(6)*G(2)
      Z2 = Z(5)*G(2) + Z(6)*G(1)
      T(1) = Z1*F(3) - Z2*F(4)
      T(2) = Z1*F(4) + Z2*F(3)
      T(5) = Z1*F(1) - Z2*F(2)
      T(6) = Z1*F(2) + Z2*F(1)
      Z1 = Z(7)*G(1) - Z(8)*G(2)
      Z2 = Z(7)*G(2) + Z(8)*G(1)
      T(3) = Z1*F(3) - Z2*F(4)
      T(4) = Z1*F(4) + Z2*F(3)
      T(7) = Z1*F(1) - Z2*F(2)
      T(8) = Z1*F(2) + Z2*F(1)
      G(3) = G(3)*C1
      G(4) = G(4)*C1
      Z1 = Z(5)*G(3) - Z(6)*G(4)
      Z2 = Z(5)*G(4) + Z(6)*G(3)
      T(1) = T(1) + Z1*F(7) - Z2*F(8)
      T(2) = T(2) + Z1*F(8) + Z2*F(7)
      T(5) = T(5) - Z1*F(5) + Z2*F(6)
      T(6) = T(6) - Z1*F(6) - Z2*F(5)
      Z1 = Z(7)*G(3) - Z(8)*G(4)
      Z2 = Z(7)*G(4) + Z(8)*G(3)
      T(3) = T(3) + Z1*F(7) - Z2*F(8)
      T(4) = T(4) + Z1*F(8) + Z2*F(7)
      T(7) = T(7) - Z1*F(5) + Z2*F(6)
```

```
      T(8)  = T(8)  - Z1*F(6)  - Z2*F(5)
      G(5)  = G(5)*C2
      G(6)  = G(6)*C2
      Z1 = Z(1)*G(5)  - Z(2)*G(6)
      Z2 = Z(1)*G(6)  + Z(2)*G(5)
      T(1)  = T(1)  + Z1*F(3)  - Z2*F(4)
      T(2)  = T(2)  + Z1*F(4)  + Z2*F(3)
      T(5)  = T(5)  + Z1*F(1)  - Z2*F(2)
      T(6)  = T(6)  + Z1*F(2)  + Z2*F(1)
      Z1 = Z(3)*G(5)  - Z(4)*G(6)
      Z2 = Z(4)*G(5)  + Z(3)*G(6)
      T(3)  = T(3)  - Z1*F(3)  + Z2*F(4)
      T(4)  = T(4)  - Z1*F(4)  - Z2*F(3)
      T(7)  = T(7)  - Z1*F(1)  + Z2*F(2)
      T(8)  = T(8)  - Z1*F(2)  - Z2*F(1)
      G(7)  = G(7)*C3
      G(8)  = G(8)*C3
      Z1 = Z(1)*G(7)  - Z(2)*G(8)
      Z2 = Z(1)*G(8)  + Z(2)*G(7)
      T(1)  = T(1)  + Z1*F(7)  - Z2*F(8)
      T(2)  = T(2)  + Z1*F(8)  + Z2*F(7)
      T(5)  = T(5)  - Z1*F(5)  + Z2*F(6)
      T(6)  = T(6)  - Z1*F(6)  - Z2*F(5)
      Z1 = Z(3)*G(7)  - Z(4)*G(8)
      Z2 = Z(3)*G(8)  + Z(4)*G(7)
      T(3)  = T(3)  - Z1*F(7)  + Z2*F(8)
      T(4)  = T(4)  - Z1*F(8)  - Z2*F(7)
      T(7)  = T(7)  + Z1*F(5)  - Z2*F(6)
      T(8)  = T(8)  + Z1*F(6)  + Z2*F(5)
C
C         UPDATE K AND ALPHA
C
      K = K + 2
      A1 = A5
      A2 = A6
      GO TO 160
C
C         THICK REGION - CALCULATE BESSEL FNS OF ALFA(K)*R(K-1)
C
 140  CONTINUE
      B3 = A3*R(K-1)
      B4 = A4*R(K-1)
      IF (B4 .NE. 0.) GO TO 150
      CALL BESI (B3,F(1),F(5))
      CALL BESK (B3,F(3),F(7))
      F(1)  = F(1)*B3
      F(3)  = F(3)*B3
      F(2)  = 0.
      F(4)  = 0.
      F(6)  = 0.
      F(8)  = 0.
      GO TO 155
C
 150  CALL CMDBES (B3,B4,F)
C
```

MULTIPLE CYLINDRICAL CONDUCTORS
SUBROUTINES

```
C          CALCULATE ELEMENTS OF T-MATRIX AT R(K-1)
C
 155   P = PERM(K)/PERM(K-1)
       Z(1)  = P*Z(1)
       Z(2)  = P*Z(2)
       Z(3)  = P*Z(3)
       Z(4)  = P*Z(4)
       T(1)  = F(3)*Z(5)  - F(4)*Z(6)  + F(7)*Z(1)  - F(8)*Z(2)
       T(2)  = F(3)*Z(6)  + F(4)*Z(5)  + F(7)*Z(2)  + F(8)*Z(1)
       T(3)  = F(3)*Z(7)  - F(4)*Z(8)  - F(7)*Z(3)  + F(8)*Z(4)
       T(4)  = F(3)*Z(8)  + F(4)*Z(7)  - F(7)*Z(4)  - F(8)*Z(3)
       T(5)  = F(1)*Z(5)  - F(2)*Z(6)  - F(5)*Z(1)  + F(6)*Z(2)
       T(6)  = F(1)*Z(6)  + F(2)*Z(5)  - F(5)*Z(2)  - F(6)*Z(1)
       T(7)  = F(1)*Z(7)  - F(2)*Z(8)  + F(5)*Z(3)  - F(6)*Z(4)
       T(8)  = F(1)*Z(8)  + F(2)*Z(7)  + F(5)*Z(4)  + F(6)*Z(3)
       K = K + 1
       A1 = A3
       A2 = A4
C
C          MULTIPLY TU = V, STORE V INTO U
C
 160   CONTINUE
       V(1)  = T(1)*U(1)  - T(2)*U(2)  + T(3)*U(3)  - T(4)*U(4)
       V(2)  = T(1)*U(2)  + T(2)*U(1)  + T(3)*U(4)  + T(4)*U(3)
       V(3)  = T(5)*U(1)  - T(6)*U(2)  + T(7)*U(3)  - T(8)*U(4)
       U(4)  = T(5)*U(2)  + T(6)*U(1)  + T(7)*U(4)  + T(8)*U(3)
       U(3)  = V(3)
       U(2)  = V(2)
       U(1)  = V(1)
C
C          CHECK FOR MORE REGIONS
C
       IF (K .LE. KLIM) GO TO 100
C
C          STORE FINAL COMPONENTS OF U INTO VEC
C
       VEC(1)  = U(1)
       VEC(2)  = U(2)
       VEC(3)  = U(3)
       VEC(4)  = U(4)
       RETURN
       ENTRY UVPRT (INN, VEC)
       ILRK = 1
       GO TO 50
       END
```

MULTIPLE CYLINDRICAL CONDUCTORS
SUBROUTINES

```
      SUBROUTINE GCALC (A, B, N, BIGG)
C
C         COMPUTES THE G FUNCTIONS FOR A THIN REGION,
C         AS DESCRIBED IN ORNL-TM-4175, PP. 69-73.
C        THE INPUT PARAMETERS ARE
C          A = RE(ALPHA(N))
C          B = IM(ALPHA(N))
C          N = REGION INDEX
C        THE OUTPUT PARAMETERS ARE STORED IN THE EIGHT-ELEMENT ARRAY
C        BIGG, WITH BIGG(1) = RE(G(1)), BIGG(2) = IM(G(1)),
C           BIGG(3) = RE(G(2)), ET C.
C
      COMMON/REGION/R(10),EM(10),PERM(10),KLIM
      DIMENSION BIGG(8)
      X = A*R(N-1)
      Y = B*R(N-1)
      T = R(N) - R(N-1)
      XI = T*A
      XPXI = XI + X
      ETA = T*B
      YPET = ETA + Y
      HOZ = T/R(N-1)
      BIGG(1) = 1. - HOZ
      BIGG(7) = 1.
      BIGG(3) = XI
      BIGG(5) = BIGG(3)
      BIGG(4) = ETA
      BIGG(6) = BIGG(4)
      BIGG(2) = 0.
      BIGG(8) = 0.
      XK = 2.
      HKORE = .5*(XI - ETA)*(XI + ETA)
      HKOIM = XI*ETA
      T = Y/X
      U = 1./(T*Y + X)
      V = -U*T
      FMMIM = V
      TIM = -FMMIM
      FMMRE = U
      TRE = -FMMRE
      SM2RE = 1.
      SRE = 1.
      TM1RE = 1.
      SM2IM = 0.
      SM1RE = 0.
      SM1IM = 0.
      SIM = 0.
      TM2RE = 0.
      TM2IM = 0.
      TM1IM = 0.
C
C         BEGIN LOOP ON K, THE SUMMATION INDEX
C
      DO 140 K=1,30
        TQ = 0.
```

MULTIPLE CYLINDRICAL CONDUCTORS
SUBROUTINES

```
      T = TRE*HKORE - TIM*HKOIM
      IF (BIGG(3) .NE. 0.) TQ = TQ + ABS(T/BIGG(3))
      BIGG(3) = BIGG(3) + T
      T = TRE*HKOIM + TIM*HKORE
      IF (BIGG(4) .NE. 0.) TQ = TQ + ABS(T/BIGG(4))
      BIGG(4) = BIGG(4) + T
      T = SRE*HKORE - SIM*HKOIM
      IF (BIGG(7) .NE. 0.) TQ = TQ + ABS(T/BIGG(7))
      BIGG(7) = BIGG(7) + T
      T = SRE*HKOIM + SIM*HKORE
      IF (BIGG(8) .NE. 0.) TQ = TQ + ABS(T/BIGG(8))
      BIGG(8) = BIGG(8) + T
      FMRE = FMMRE + U
      FMIM = FMMIM + V
C
C        FOUR-TERM RECURRENCE RELATION FOR S AND T
C
      SPRE = FMMRE*SM2RE - FMMIM*SM2IM + SM1RE + FMIM*SIM - FMRE*SRE
      SPIM = FMMRE*SM2IM + FMMIM*SM2RE + SM1IM - FMIM*SRE - FMRE*SIM
      TPRE = FMMRE*TM2RE - FMMIM*TM2IM + TM1RE + FMIM*TIM - FMRE*TRE
      TPIM = FMMRE*TM2IM + FMMIM*TM2RE + TM1IM - FMIM*TRE - FMRE*TIM
      T = TPRE*HKORE - TPIM*HKOIM
      IF (BIGG(1) .NE. 0.) TQ = TQ + ABS(T/BIGG(1))
      BIGG(1) = BIGG(1) + T
      T = TPRE*HKOIM + TPIM*HKORE
      IF (BIGG(2) .NE. 0.) TQ = TQ + ABS(T/BIGG(2))
      BIGG(2) = BIGG(2) + T
      T = SPRE*HKORE - SPIM*HKOIM
      IF (BIGG(5) .NE. 0.) TQ = TQ + ABS(T/BIGG(5))
      BIGG(5) = BIGG(5) + T
      T = SPRE*HKOIM + SPIM*HKORE
      IF (BIGG(6) .NE. 0.) TQ = TQ + ABS(T/BIGG(6))
      BIGG(6) = BIGG(6) + T
C
C       TEST CONVERGENCE
C
      IF (TQ .LT. 1.E-7) GO TO 145
C
C       UPDATE FOR NEXT PASS
C
      FMMRE = FMRE
      FMMIM = FMIM
      SM2RE = SM1RE
      SM1RE = SRE
      SRE = SPRE
      SM2IM = SM1IM
      SM1IM = SIM
      SIM = SPIM
      TM2RE = TM1RE
      TM1RE = TRE
      TRE = TPRE
      TM2IM = TM1IM
      TM1IM = TIM
      TIM = TPIM
      XK = XK + 1.
```

```
        T = (HKORE*XI - HKOIM*ETA)/XK
        HKOIM = (HKORE*ETA + HKOIM*XI)/XK
        HKORE = T
 140  CONTINUE
C
C        SUMMATION FINISHED. IF A NORMAL EXIT IS MADE FROM
C        THE ABOVE LOOP, CONVERGENCE WAS NOT REACHED.
C         TYPE OUT THE NON-CONVERGENCE ALARM.
C
      TYPE 1,TQ
 1    FORMAT ('1 GCALC NOT CONVERGED AFTER 30 TERMS-TQ=',1PE15.6)
      STOP
C
C        CONVERGENCE REACHED.
C         MULTIPLY BY APPROPRIATE FACTORS.
C
 145  CONTINUE
      T = BIGG(3)*XPXI - BIGG(4)*YPET
      BIGG(4) = BIGG(3)*YPET + BIGG(4)*XPXI
      BIGG(3) = T
      T = BIGG(5)*U - BIGG(6)*V
      BIGG(6) = BIGG(5)*V + BIGG(6)*U
      BIGG(5) = T
      T  =  1. + HOZ
      BIGG(7) = T*BIGG(7)
      BIGG(8) = BIGG(8)*T
      RETURN
      END
```

Subroutine COLAIR

This subroutine computes the value of the air parameter A_9, which, for identical intermeshed coils, is given by the expression

$$A_9 = \pi(r_2 - r_1)^2(l_2 - l_1)^2 \int_0^\infty \left[\frac{J(r_2,r_1)}{\alpha(r_2 - r_1)}\right]^2 \frac{\alpha(l_2 - l_1) + e^{-\alpha(l_2 - l_1)} - 1}{\alpha^2(l_2 - l_1)^2} \frac{d\alpha}{\alpha^2} .$$

The infinite integral is approximated by the sum

$$\int_0^\infty f(\alpha)d\alpha \cong \sum_{n=1}^{N} \int_{\alpha_{n-1}}^{\alpha_n} f(\alpha)d\alpha ,$$

with $\alpha_0 = 0$ and with the stepsize $\alpha_n - \alpha_{n-1}$ and the last upper limit α_N requested from the user's input terminal. The contributions from each step are computed with subroutine ADAPT, using Gaussian integration. Values of the sum can be printed as frequently as desired. The output shown below is from a run on the PDP-10 with

$$\alpha_n - \alpha_{n-1} = 0.25$$

$$\alpha_N = 200 ,$$

and printing every 40th step; the column headed "TERM" shows values of the integral over the last interval before printing; that is, for $\alpha_n = 10$, the entry in the "INTEGRAL" column is

$$\int_0^{10} f(\alpha)d\alpha ,$$

and the entry in the "TERM" column is

$$\int_{9.75}^{10} f(\alpha)d\alpha .$$

TYPE IN MAXIMUM ALPHA, STEP AND PRINT FREQUENCY
FOR INTEGRATION FOR A9. FOR DEFAULT VALUES, HIT RETURN.
200,.25,40 ↓

ALPHA	INTEGRAL	TERM
1.0000000E+01	3.2086329E-01	9.5676977E-05
2.0000000E+01	3.2668920E-01	4.8552126E-07
3.0000000E+01	3.2706258E-01	1.2545491E-05
4.0000000E+01	3.2722630E-01	4.7799420E-08
5.0000000E+01	3.2727536E-01	2.4598147E-06
6.0000000E+01	3.2729297E-01	3.2716575E-08
7.0000000E+01	3.2730489E-01	4.1123364E-09
8.0000000E+01	3.2731018E-01	1.2096378E-09
9.0000000E+01	3.2731456E-01	2.3128475E-07
1.0000000E+02	3.2731653E-01	1.4647092E-08
1.1000000E+02	3.2731871E-01	6.6399984E-08
1.2000000E+02	3.2731934E-01	2.5078999E-09
1.3000000E+02	3.2732039E-01	6.2076782E-09
1.4000000E+02	3.2732077E-01	2.9641923E-09
1.5000000E+02	3.2732141E-01	3.1878876E-08
1.6000000E+02	3.2732159E-01	5.2585881E-09
1.7000000E+02	3.2732200E-01	4.4921533E-09
1.8000000E+02	3.2732209E-01	8.6923681E-11
1.9000000E+02	3.2732232E-01	4.0632505E-09
2.0000000E+02	3.2732239E-01	2.6673168E-09

A9 = 1.0119264E-02

MULTIPLE CYLINDRICAL CONDUCTORS
SUBROUTINES

```
      SUBROUTINE COLAIR (Q9, LOU, CINT)
C
C        COMPUTES THE AIR PARAMETER, Q9, USING GAUSSIAN INTEGRATION.
C        Q9 IS A NORMALIZED VALUE OF A9, THE AIR PARAMETER USED IN
C        ORNL-TM-3295, P. 149
C
      EXTERNAL CINT, GAUSS
      COMMON /COILS/ R1, R2, XL1, XL2, R3, R4, XL3, XL4
      COMMON /INTPAR/ ALMAX, STEP, IP
      DATA BLANK /5H     /
      DATA PLUS /5H+    /
      DATA PI/ 3.14159265 /
      A1 = 0.
      CONT = 0.
      SUM = 0.
      NP = 0
      WRITE (LOU,7)
 7    FORMAT ('0',6X,'ALPHA',7X,'INTEGRAL',7X,'TERM'/1X)
C
 100  A2 = A1 + STEP
      CALL ADAPT (A1, A2, GAUSS, CINT, 1.E-4, 5.E-8, CONT, CHAR)
      SUM = SUM + CONT
      NP = NP + 1
      IF (NP .LT. IP) GO TO 121
      NP = 0
      WRITE (LOU,4) A2, SUM, CONT, CHAR
 4    FORMAT (1X, 1P3E15.7, 5XA1)
C
 121  A1 = A2
      IF (A1 .LE. ALMAX) GO TO 100
C
 125  Q9 = PI*SUM
      IF (XL2 .NE. XL4) Q9 = .5*Q9
      RETURN
      END
```

MULTIPLE CYLINDRICAL CONDUCTORS
SUBROUTINES

```
      BLOCK DATA
C
C        VALUES FOR ATTENUATOR CIRCUIT PARAMETERS
C
      COMMON /CIRCT/ V0, R0, C6, R6, ZZ(4), R7, C7, R9, TN
      DATA V0, R0, C6, R6 /3.2341, 464., 3.83E-9, 59.4/
      DATA R7, C7, R9 /69.4, 3.83E-9, 464./
      DATA TN /190.75/
      END
```

MULTIPLE CYLINDRICAL CONDUCTORS
SUBROUTINES

```
      SUBROUTINE ATTEN (ITY)
C
C        DISPLAY AND ALTER ATTENUATOR CIRCUIT PARAMETERS
C        (SEE P. 21, ORNL-TM-4175)
C
      COMMON /CIRCT/ V0, R0, C6, R6, ZZ(4), R7, C7, R9, TN
      COMMON /COILIN/ CSIZE(10)
      DIMENSION PARAM(8), NAME(8)
      DATA NAME /2HV0, 2HR0, 2HC6, 2HR6, 2HR7, 2HC7, 2HR9, 2HTN/
      WRITE (ITY,1)
 1    FORMAT ('1EACH OF THE PARAMETERS OF THE ATTENUATOR CIRCUIT'/
     1 ' WILL BE LISTED WITH ITS CURRENT VALUE. TO RETAIN THIS'/
     2 ' VALUE, HIT RETURN. TO INSERT A NEW VALUE, TYPE IT IN.'/1X)
      PARAM(1) = V0
      PARAM(2) = R0
      PARAM(3) = C6
      PARAM(4) = R6
      PARAM(5) = R7
      PARAM(6) = C7
      PARAM(7) = R9
      PARAM(8) = TN
      DO 100 I=1,8
        WRITE (ITY,2) NAME(I), PARAM(I)
 2      FORMAT (1X, A2, 1PE13.5, 2X, $)
        READ (ITY,3) TEMP
 3      FORMAT (E)
        IF (TEMP .GT. 0.) PARAM(I) = TEMP
 100  CONTINUE
      V0 = PARAM(1)
      R0 = PARAM(2)
      C6 = PARAM(3)
      R6 = PARAM(4)
      R7 = PARAM(5)
      C7 = PARAM(6)
      R9 = PARAM(7)
      TN = PARAM(8)
      CSIZE(9) = TN
      CSIZE(10) = TN
      RETURN
      END
```

MULTIPLE CYLINDRICAL CONDUCTORS
SUBROUTINES

```
      SUBROUTINE VOUT (VORL, VOIM, VOABS, VOARG)
C
C        CALCULATE ATTENUATOR OUTPUT VOLTAGE
C          VORL  = REAL PART
C          VOIM  = IMAG PART
C          VOABS = MAGNITUDE
C          VOARG = PHASE IN RADIANS
C
C        (SEE PP. 108-111, ORNL-TM-4175)
C
      REAL MU, L
      COMMON /CIRCT/ V0, R0, C6, R6, ZDRL, ZDIM, ZPURL, ZPUIM,
     1 R7, C7, R9, TN
      COMMON /INNML/ OMEGA, L, R1, R2, A9, ZRL, ZIM, RBAR
      DATA G /1./, MU /1.256637061E-6/
      R = R2 - R1
      A = (OMEGA + OMEGA)*TN*TN*MU*RBAR*A9/(L*L*R*R)
      ZMRL = A*ZRL
      ZDRL = ZMRL
      ZPURL = ZMRL
      ZMIM = A*ZIM
      ZDIM = ZMIM
      ZPUIM = ZMIM
      B = -V0*R9*G
      VNUMRL = B*ZMRL
      VNUMIM = B*ZMIM
      P = C6*R0
      Q = C7*R9
      OMEGSQ = OMEGA*OMEGA
      X = OMEGSQ*P*Q - 1.
      Y = -OMEGA*(P + Q)
      S = ZMRL*ZMRL - ZMIM*ZMIM
      T = (ZMRL + ZMRL)*ZMIM
      U = X*S - Y*T
      W = Y*S + X*T
      A = OMEGA*P
      B = ZDRL + R6
      E = A*B + ZDIM
      F = A*ZDIM - (B + R0)
      A = OMEGA*Q
      B = ZPURL + R7
      C = A*B + ZPUIM
      D = A*ZPUIM - (B + R9)
      A = C*E - D*F
      B = D*E + C*F
      VDENRL = A + U
      VDENIM = B + W
      DENSQ = VDENRL*VDENRL + VDENIM*VDENIM
      VORL = (VNUMRL*VDENRL + VNUMIM*VDENIM)/DENSQ
      VOIM = (VNUMIM*VDENRL - VNUMRL*VDENIM)/DENSQ
      VOABS = SQRT (VORL*VORL + VOIM*VOIM)
      VOARG = MU*.125E7
      IF (VORL .NE. 0.) VOARG = ATAN (VOIM/VORL)
      RETURN
      END
```

MULTIPLE CYLINDRICAL CONDUCTORS
SUBROUTINES

```
      SUBROUTINE CDISP (IUN)
C
C         DISPLAYS COIL PARAMETERS ON LOGICAL UNIT IUN
C
      COMMON /COILIN/ CSIZE(10)
      COMMON /COILS/ CZNORM(8)
      COMMON /CNAME/ NMCP(11)
      WRITE (IUN,1)
 1    FORMAT ('0COIL PARAMETERS ARE :'/7X, 'ACTUAL', 5X, 'NORM'/1X)
      DO 100 I=1,8
        WRITE (IUN,2) NMCP(I), CSIZE(I), CZNORM(I)
 2      FORMAT (1X, A2, 2F10.3)
 100  CONTINUE
      WRITE (IUN,3) CSIZE(9), CSIZE(10)
 3    FORMAT (' N1', F10.3/' N2', F10.3)
      RETURN
      END
```

MULTIPLE CYLINDRICAL CONDUCTORS
SUBROUTINES

```
      SUBROUTINE CCHAN
C
C         CHANGE COIL PARAMETERS
C
      COMMON /COILIN/ CSIZE(10)
      COMMON /COILS/ CZNORM(8)
      COMMON /CNAME/ NMCP(11)
      DIMENSION LIST(4)
      DATA LIST /5HALL  , 5HSELEC, 5HNAMES, 5H     /, ITTY /5/
C
 90   WRITE (ITTY,1)
 1    FORMAT ('0TO CHANGE ALL COIL PARAMETERS, TYPE "ALL" FOLLOWED'/
     1 ' BY A RETURN. TO CHANGE SELECTED COIL PARAMETERS,'/
     2 ' TYPE "SELECT". TO SEE THE PARAMETER NAMES, TYPE "NAMES".'/
     3 ' TO KEEP THE PRESENT COIL PARAMETERS, HIT RETURN.'/1X)
C
 100  READ (ITTY,2) ITEM
 2    FORMAT (A5)
      CALL MATCH (ITEM, LIST, 4, KMAT)
      IF (KMAT .NE. 0) GO TO 105
      WRITE (ITTY,3) ITEM
 3    FORMAT (1X, A5, '? TRY AGAIN]', $)
      GO TO 100
C
 105  GO TO (110, 140, 160, 135), KMAT
C
C         CHANGE ALL COIL PARAMETERS
C
 110  WRITE (ITTY,4)
 4    FORMAT (' TYPE THE COIL PARAMETER VALUES'/1X)
      DO 115 N=1,10
        WRITE (ITTY,5) NMCP(N)
 5      FORMAT (1X, A2, 1X, $)
        READ (ITTY,6) CSIZE(N)
 6      FORMAT (E)
 115  CONTINUE
C
C         DONE - NORMALIZE COIL PARAMETERS AND RETURN
C
 135  CALL NORMCO
      RETURN
C
C         CHANGE SELECTED COIL PARAMETERS
C
 140  WRITE (ITTY,9)
 9    FORMAT (' TYPE THE TWO-CHARACTER NAME, AT LEAST ONE SPACE, AND'/
     1 ' THE NEW PARAMETER VALUE. END WITH A NAME OF "XX".'/1X)
C
 145  READ (ITTY,10) ITEM, VAL
 10   FORMAT (A2, E)
      CALL MATCH (ITEM, NMCP, 11, KMAT)
      IF (KMAT .GT. 0) GO TO 150
C
 146  WRITE (ITTY,11) ITEM
 11   FORMAT (' THERE IS NO PARAMETER NAMED ', A2, '. TRY AGAIN]'/1X)
```

```
      GO TO 145
C
 150  IF (KMAT .GT. 10) GO TO 155
      CSIZE(KMAT) = VAL
      GO TO 145
C
 155  IF (KMAT .EQ. 11) GO TO 135
      GO TO 146
C
C          DISPLAY PARAMETER NAMES
C
 160  WRITE (ITTY,12) NMCP
 12   FORMAT (' THE PARAMETER NAMES ARE'/1X, 11A5/1X)
      GO TO 90
      END
```

MULTIPLE CYLINDRICAL CONDUCTORS
SUBROUTINES

```
      SUBROUTINE CNDDSP (IOPT,IUN)
C
C         DISPLAYS CONDUCTOR PROPERTIES ON UNIT IUN
C         IOPT  1 = INNER, 2 = OUTER
C
      COMMON /INOUT/ WORD(2)
      COMMON /INTCON/ XRIN(10), XMIN(10), XMUI(10), XRHI(10), NCIN
      COMMON /EXTCON/ XREX(10), XMEX(10), XMUX(10), XRHX(10), NCEX
      COMMON /REGINT/ RIN(10), EMIN(10), PERMIN(10), NRIN
      COMMON /REGEXT/ REX(10), EMEX(10), PERMEX(10), NREX
      COMMON /REGION/ R(10), EM(11), PERM(11), NREG
      COMMON /TEMPS/ A(40)
      DIMENSION XR(10), XM(10), RHO(10), OUT(5)
      EQUIVALENCE (XR(1),A(1)), (XM(1),A(11)),
     1 (RHO(1),A(21)), (OUT(1),A(31))
      IF (IOPT .EQ. 2) GO TO 110
      NREG = NRIN
      DO 105 N=1,NREG
        R(N) = RIN(N)
        XR(N) = XRIN(N)
        EM(N) = EMIN(N)
        XM(N) = XMIN(N)
        PERM(N) = PERMIN(N)
        RHO(N) = XRHI(N)
 105  CONTINUE
      GO TO 120
C
 110  NREG = NREX
      DO 115 N=1,NREG
        R(N) = REX(N)
        XR(N) = XREX(N)
        EM(N) = EMEX(N)
        XM(N) = XMEX(N)
        PERM(N) = PERMEX(N)
        RHO(N) = XRHX(N)
 115  CONTINUE
C
 120  WRITE (IUN,1) WORD(IOPT)
 1    FORMAT ('0', A5, ' CONDUCTOR PROPERTIES:'/
     1 '   N  R,ACTUAL R,NORM  M,NORM        MU(REL)', 7X,
     2 'RHO'/1X)
      DO 125 N=1,NREG
        OUT(1) = XR(N)
        OUT(2) = R(N)
        OUT(3) = EM(N)
        OUT(4) = PERM(N)
        OUT(5) = RHO(N)
        WRITE (IUN,2) N, OUT
 2      FORMAT (1X, I2, 2F10.3, 1P3E12.4)
 125  CONTINUE
      RETURN
      END
```

MULTIPLE CYLINDRICAL CONDUCTORS
SUBROUTINES

```
      SUBROUTINE CNDCHA (ITTY)
C
C-----      07/12/74
C-----     THIS SUBROUTINE WILL, UPON REQUEST, INSERT, CHANGE, OR
C-----     DELETE SELECTED CONDUCTOR PARAMETERS IN EITHER THE
C-----     INTERNAL OR EXTERNAL REGIONS.
C-----
      COMMON /EXTCON/ XREX(10),XMEX(10),XMUX(10),XRHX(10),NCEX
      COMMON /INTCON/ XRIN(10),XMIN(10),XMUI(10),XRHI(10),NCIN
      COMMON /REGINT/ RIN(10),EMIN(10),PERMIN(10),NRIN
      COMMON /REGEXT/ REX(10),EMEX(10),PERMEX(10),NREX
      COMMON /COILIN/ CSIZE(10)
      DIMENSION NAMCOP(4),DECIS(4),CON(2),CODRI(4),CODRE(4)
      EQUIVALENCE (CODRE(1),CODRI(1))
      DIMENSION JUDGE(2)
      DATA JUDGE / 5HYES  ,5HNO   /
      DATA NAMCOP /5HR    , 5HM    , 5HMU   , 5HRHO  /
      DATA DECIS /5HINSER, 5HDELET, 5HCHANG, 5H     /
      DATA CON /3HINT,3HEXT/
      DATA  BIG, SMALL /5HLARGE, 5HSMALL/
C
 1    WRITE(ITTY,5)
 5    FORMAT ('0TO INSERT CONDUCTORS, TYPE "INSERT"'/
     1 ' TO CHANGE CONDUCTORS, TYPE "CHANGE"'/
     2 ' TO DELETE CONDUCTORS, TYPE "DELETE"'/
     3 ' FOLLOWED BY A RETURN. TO RETURN TO THE MAIN PROGRAM,'/
     4 ' HIT RETURN.'/1X)
C
 10   READ (ITTY,15) PICK
 15   FORMAT (A5)
      CALL MATCH (PICK,DECIS,4,KMAT)
      IF (KMAT .NE. 0) GO TO 25
      WRITE (ITTY,20) PICK
 20   FORMAT (1X,A6,'? TRY AGAIN]',$)
      GO TO 10
C
 25   GO TO (30,215,375,525),KMAT
C
C         INSERT ADDITIONAL CONDUCTORS
C
 30   WRITE (ITTY,35)
 35   FORMAT ('0FOR A CONDUCTOR INSIDE THE COILS, TYPE "INT"'/
     1 ' FOR A CONDUCTOR OUTSIDE THE COILS, TYPE "EXT"'/
     1 ' FOLLOWED BY A RETURN.'/1X)
C
 37   READ (ITTY,40) CHOICE
 40   FORMAT (A3)
      CALL MATCH (CHOICE,CON,2,KMAT)
      IF (KMAT .NE. 0) GO TO 50
      WRITE (ITTY,20) CHOICE
      GO TO 37
C
 50   IF (KMAT .EQ. 2) GO TO 125
C
C          INSERT INTERNAL CONDUCTOR, IF POSSIBLE.
```

MULTIPLE CYLINDRICAL CONDUCTORS
SUBROUTINES

```
C
      N = NCIN
      IF (N .LT. 10) GO TO 65
      WRITE (ITTY,60) CON(1)
 60   FORMAT ('0ALREADY HAVE THE MAXIMUM NUMBER OF ',
     1 A3,'ERNAL CONDUCTORS.'/1X)
      GO TO 185
C
 65   WRITE (ITTY,130) CON(1)
C
 73   DO 85 M=1,4
        WRITE (ITTY,75) NAMCOP(M)
 75     FORMAT (1X,A5,1X,$)
        READ (ITTY,80) CODRI(M)
 80     FORMAT (E)
 85   CONTINUE
C
C          TEST CONDUCTOR RADIUS AGAINST MINIMUM COIL INNER RADIUS
C
      IF (CODRI(1) .LT. AMIN1(CSIZE(1),CSIZE(5))) GO TO 95
      WRITE (ITTY,90) BIG, CON(1)
 90   FORMAT (' R IS TOO ',A5,' FOR THE ',A3,'ERNAL REGION.'/
     1 ' TRY AGAIN.'/1X)
      GO TO 73
C
 95   IF (N .EQ. 0) GO TO 115
      IF (CODRI(1) .GT. XRIN(N)) GO TO 115
C
C          NEW CONDUCTOR RADIUS .LE. OLD LAST CONDUCTOR RADIUS.
C          FIND I SUCH THAT NEW CONDUCTOR RADIUS IS .LT. R(I),
C          THEN MOVE PARAMETERS FOR OLD ITH THRU NTH REGIONS
C          OUT 1 SLOT.
C
      DO 100 I=1,N
        IF (CODRI(1) .LT. XRIN(I)) GO TO 105
 100  CONTINUE
C
 105  J = I + 1
      N = N + 1
      K = N
      DO 110 L=J,N
        XRIN(K) = XRIN(K-1)
        XMIN(K) = XMIN(K-1)
        XMUI(K) = XMUI(K-1)
        XRHI(K) = XRHI(K-1)
        K = K - 1
 110  CONTINUE
C
C          NEW PARAMETERS IN ITH REGION - USE NONZERO INPUT
C          VALUES ONLY.
C
      IF (CODRI(1) .NE. 0.) XRIN(I) = CODRI(1)
      XMIN(I) = CODRI(2)
      IF (CODRI(3) .NE. 0.) XMUI(I) = CODRI(3)
      IF (CODRI(4) .NE. 0.) XRHI(I) = CODRI(4)
```

MULTIPLE CYLINDRICAL CONDUCTORS
SUBROUTINES

```
      GO TO 120
C
C          NEW CONDUCTOR IS OUTERMOST INTERNAL CONDUCTOR
C
 115  N = N + 1
      IF (CODRI(1) .NE. 0.) XRIN(N) = CODRI(1)
      XMIN(N) = CODRI(2)
      IF (CODRI(3) .NE. 0.) XMUI(N) = CODRI(3)
      IF (CODRI(4) .NE. 0.) XRHI(N) = CODRI(4)
C
 120  NCIN = N
      GO TO 185
C
C          INSERT EXTERNAL CONDUCTOR
C
 125  NN = NCEX
      IF (NN .LT. 10) GO TO 126
      WRITE (ITTY,60) CON(2)
      GO TO 185
C
 126  WRITE (ITTY,130) CON(2)
 130  FORMAT (' TYPE IN THE NEW CONDUCTOR PARAMETER VALUES'/
     1 ' FOR THE ',A3,'ERNAL REGION.'/1X)
C
 133  DO 145 M=1,4
        WRITE (ITTY,75) NAMCOP(M)
        READ (ITTY,80) CODRE(M)
 145  CONTINUE
      IF (CODRE(1) .GT. AMAX1(CSIZE(2),CSIZE(6))) GO TO 155
      WRITE (ITTY,90) SMALL, CON(2)
      GO TO 133
C
 155  IF (NN .EQ. 0) GO TO 175
      IF (CODRE(1) .LT. XREX(NN)) GO TO 175
      DO 160 I=1,NN
        IF (CODRE(1) .GT. XREX(I)) GO TO 165
 160  CONTINUE
C
 165  J = I + 1
      NN = NN + 1
      K = NN
      DO 170 L=J,NN
        XREX(K) = XREX(K-1)
        XMEX(K) = XMEX(K-1)
        XMUX(K) = XMUX(K-1)
        XRHX(K) = XRHX(K-1)
        K = K - 1
 170  CONTINUE
      IF (CODRE(1) .NE. 0.) XREX(I) = CODRE(1)
      XMEX(I) = CODRE(2)
      IF (CODRE(3) .NE. 0.) XMUX(I) = CODRE(3)
      IF (CODRE(4) .NE. 0.) XRHX(I) = CODRE(4)
      GO TO 180
C
```

MULTIPLE CYLINDRICAL CONDUCTORS
SUBROUTINES

```
 175  NN = NN + 1
      IF (CODRE(1) .NE. 0.) XREX(NN) = CODRE(1)
      XMEX(NN) = CODRE(2)
      IF (CODRE(3) .NE. 0.) XMUX(NN) = CODRE(3)
      IF (CODRE(4) .NE. 0.) XRHX(NN) = CODRE(4)
C
 180  NCEX = NN
C
C        QUERY FOR MORE REGIONS
C
 185  WRITE (ITTY,190)
 190  FORMAT ('0FOR MORE REGIONS, TYPE "YES";'/
     1 ' IF NOT, TYPE "NO", FOLLOWED BY A RETURN.'/1X)
C
 195  READ (ITTY,200) LOOK
 200  FORMAT (A4)
      CALL MATCH (LOOK,JUDGE,2,KMAT)
      IF (KMAT .NE. 0) GO TO 210
      WRITE (ITTY,20) LOOK
      GO TO 195
C
 210  GO TO (30,1), KMAT
C
C        DELETE AN EXISTING CONDUCTOR
C
 215  WRITE (ITTY,35)
C
 225  READ (ITTY,40) CHOICE
      CALL MATCH (CHOICE,CON,2,KMAT)
      IF (KMAT .NE. 0) GO TO 240
      WRITE (ITTY,20) CHOICE
      GO TO 225
C
 240  IF (KMAT .EQ. 2) GO TO 300
C
C        DELETE AN INTERNAL CONDUCTOR.
C
      WRITE (ITTY,250) CON(1), DECIS(2)
 250  FORMAT ('0TYPE IN THE VALUE "I" CORRESPONDING TO THE'/
     1  1X,A3,'ERNAL REGION WHOSE PARAMETERS YOU WANT '/1X,
     2  A5, 'ED'/1X)
      WRITE (ITTY,275)
 275  FORMAT (' I    ',$)
      READ (ITTY,280) I
 280  FORMAT (I2)
      N = NCIN - 1
      IF (I .EQ. NCIN) GO TO 290
C
C        MOVE ALL PARAMETERS IN ONE SLOT, IF REGION DELETED
C        WAS NOT THE OLD LAST REGION.
C
      DO 285 L=I,N
        XRIN(L) = XRIN(L+1)
        XMIN(L) = XMIN(L+1)
        XMUI(L) = XMUI(L+1)
```

MULTIPLE CYLINDRICAL CONDUCTORS
SUBROUTINES

```
        XRHI(L)  = XRHI(L+1)
 285  CONTINUE
C
 290  NCIN = N
      GO TO 330
C
C        DELETE AN EXTERNAL CONDUCTOR
C
 300  WRITE (ITTY,250) CON(2), DECIS(2)
      WRITE (ITTY,275)
      READ (ITTY,280) I
      N = NCEX - 1
      IF (I .EQ. NCEX) GO TO 325
      DO 320 L=I,N
        XREX(L)  = XREX(L+1)
        XMEX(L)  = XMEX(L+1)
        XMUX(L)  = XMUX(L+1)
        XRHX(L)  = XRHX(L+1)
 320  CONTINUE
C
 325  NCEX = N
C
C        QUERY FOR MORE REGIONS
C
 330  WRITE (ITTY,190)
C
 337  READ (ITTY,200) LOOK
      CALL MATCH (LOOK,JUDGE,2,KMAT)
      IF (KMAT .NE. 0) GO TO 350
      WRITE (ITTY,20) LOOK
      GO TO 337
C
 350  GO TO (215,1), KMAT
C
C        CHANGE AN EXISTING CONDUCTOR
C
 375  WRITE (ITTY,35)
C
 385  READ (ITTY,40) CHOICE
      CALL MATCH (CHOICE,CON,2,KMAT)
      IF (KMAT .NE. 0) GO TO 400
      WRITE (ITTY,20) CHOICE
      GO TO 385
C
 400  IF (KMAT .EQ. 2) GO TO 445
C
C        CHANGE PROPERTIES OF AN EXISTING CONDUCTOR
C
      WRITE (ITTY,250) CON(1), DECIS(3)
      WRITE (ITTY,275)
      READ (ITTY,280) I
      WRITE (ITTY,425)
 425  FORMAT('0TYPE IN THE NEW PARAMETER VALUES.'/1X)
      DO 440 M=1,4
        WRITE (ITTY,75) NAMCOP(M)
```

MULTIPLE CYLINDRICAL CONDUCTORS
SUBROUTINES

```
        READ (ITTY,80) CODRI(M)
 440  CONTINUE
C
C         REPLACE OLD PARAMETER VALUES BY NONZERO INPUT VALUES
C
      IF (CODRI(1) .NE. 0.) XRIN(I) = CODRI(1)
      XMIN(I) = CODRI(2)
      IF (CODRI(3) .NE. 0.) XMUI(I) = CODRI(3)
      IF (CODRI(4) .NE. 0.) XRHI(I) = CODRI(4)
      GO TO 485
C
C         CHANGE EXTERNAL REGION
C
 445  WRITE (ITTY,250) CON(2), DECIS(3)
      WRITE (ITTY,275)
      READ (ITTY,280) I
      WRITE (ITTY,425)
      DO 480 M=1,4
        WRITE (ITTY,75) NAMCOP(M)
        READ (ITTY,80) CODRE(M)
 480  CONTINUE
      IF (CODRE(1) .NE. 0.) XREX(I) = CODRE(1)
      XMEX(I) = CODRE(2)
      IF (CODRE(3) .NE. 0.) XMUX(I) = CODRE(3)
      IF (CODRE(4) .NE. 0.) XRHX(I) = CODRE(4)
C
C         QUERY FOR MORE REGIONS
C
 485  WRITE (ITTY,190)
C
 500  READ (ITTY,200) LOOK
      CALL MATCH (LOOK,JUDGE,2,KMAT)
      IF (KMAT .NE. 0) GO TO 520
      WRITE (ITTY,20) LOOK
      GO TO 500
C
 520  GO TO (375,1), KMAT
C
C         BLANK - RETURN TO CALLING PROGRAM
C
 525  RETURN
      END
```

MULTIPLE CYLINDRICAL CONDUCTORS
SUBROUTINES

```
      SUBROUTINE NORMCO
C
C         NORMALIZE COIL DIMENSIONS BY MULTIPLYING BY THE
C         RECIPROCAL OF THE MEAN RADIUS OF COIL NO. 1
C
      COMMON /COILIN/ CSIZE(10)
      COMMON /COILS/ CZNORM(8)  /FACT/ RRB
      RRB = 2./(CSIZE(1) + CSIZE(2))
      DO 100 N=1,8
        CZNORM(N) = CSIZE(N)*RRB
  100 CONTINUE
      RETURN
      END
```

MULTIPLE CYLINDRICAL CONDUCTORS
SUBROUTINES

```
      SUBROUTINE MATCH (ITEM, ITBL, NENT, KMAT)
C
C         SEARCHES THE TABLE ITBL WITH NENT ENTRIES FOR KMAT, THE
C         INDEX OF THE FIRST ENTRY WHICH IS EQUAL TO ITEM. IF NO
C         MATCH IS FOUND, KMAT IS ZERO
C
      DIMENSION ITBL(1)
      KMAT = 0
      DO 100 N=1,NENT
        IF (ITEM .NE. ITBL(N)) GO TO 100
        KMAT = N
        RETURN
  100 CONTINUE
      RETURN
      END
```

INDEX OF SUBROUTINE DEFINITIONS AND CALLS

MULTIPLE CYLINDRICAL CONDUCTORS SUBROUTINES

ADAP2 61
ADAP2 (CALL) 42, 51
ADAPT 57
ADAPT (CALL) 114
ATTEN 116
ATTEN (CALL) 38, 43

BESI 80
BESI (CALL) 82, 105-107
BESK 82
BESK (CALL) 105-107
BLOCK DATA (ATTENUATOR) 115
BLOCK DATA (COIL PARAMETER NAMES) 53
BLOCK DATA (TEST CASE PARAMETERS) 45

CCHAN 119
CCHAN (CALL) 38
CDISP 118
CDISP (CALL) 38, 50
CINT 95
CINT (CALL) 39, 50, 114
CITBLO 101
CITBLO (CALL) 39, 50
CMDBES 70
CMDBES (CALL) 105-107
CMI 77
CMI (CALL) 70
CNDCHA 122
CNDCHA (CALL) 40
CNDDSP 19
CNDDSP (CALL) 40, 50
COLAIR 114
COLAIR (CALL) 39, 50
COMKB 73
COMKB (CALL) 70

DJCO 98
DJCO (CALL) 42, 51

F (CALL) 65, 67
FINT (CALL) 57, 61

GAUS2 67
GAUS2 (CALL) 42, 51
GAUSS 65
GAUSS (CALL) 114
GCALC 109
GCALC (CALL) 106

MATCH 129
MATCH (CALL) 40, 119, 122, 125-127
METHD 57, 61

NONINTERACTIVE MAIN PROGRAM 49
NORMCO 128
NORMCO (CALL) 38, 49, 119

QIDF 92
QIDF (CALL) 42, 51

UVMAT 104
UVMAT (CALL) 92, 99
UVPRT 108

VOUT 117
VOUT (CALL) 42-44, 51-52

XIINT 86
XIINT (CALL) 92, 98
XJJNT 84
XJJNT (CALL) 95, 101
XKKNT 89
XKKNT (CALL) 92, 98

ORNL-5220
UC-32 - Mathematics and Computers

INTERNAL DISTRIBUTION

1. H. P. Carter/A. A. Brooks CSD Library
2. J. S. Crowell
3-27. C. V. Dodd
28. R. W. McClung
29. G. S. McNeilly
30. B. D. Murphy
31-35. C. W. Nestor, Jr.
36. S. K. Penny
37-38. Central Research Library
39. Document Reference Section - Y-12
40-41. Laboratory Records
42. Laboratory Records - RC
43. ORNL Patent Office

EXTERNAL DISTRIBUTION

44. Chief, Mathematics and Geoscience Branch, Department of Energy, Washington, DC 20545
45. W. E. Deeds, Physics Bldg., Room 401, The University of Tennessee, Knoxville, TN 37916
46. Office of Assistant Manager for Energy Research and Development, DOE/ORO, P. O. Box E, Oak Ridge, TN 37830
47. J. N. Rogers, Division 8324, Sandia Laboratories, Livermore, CA 94550
48-252. Given distribution as shown in TID-4500 under Mathematics and Computers category (25 copies-NTIS)

☆U.S. GOVERNMENT PRINTING OFFICE: 1979-640-079-92

CRC

Central Research Library

JUL 12 1979