LOCKHEED MARTIN ENERGY RESEARCH LIBRARIES

3 4456 0515148 4

ORNL-5406/R1

# Safety Analysis Report for Packaging (SARP) of the Oak Ridge National Laboratory Shipping Cask D-38 Revision 1

W. D. Box
L. B. Shappert
R. D. Seagren
C. D. Watson
C. R. Hammond
B. B. Klima

OAK RIDGE NATIONAL LABORATORY
CENTRAL RESEARCH LIBRARY
CIRCULATION SECTION
4500N ROOM 175
LIBRARY LOAN COPY
DO NOT TRANSFER TO ANOTHER PERSON
If you wish someone else to see this report, send in name with report and the library will arrange a loan.
UCN-7969 (3 9-77)

OAK RIDGE NATIONAL LABORATORY
OPERATED BY UNION CARBIDE CORPORATION · FOR THE DEPARTMENT OF ENERGY

Printed in the United States of America. Available from
National Technical Information Service
U.S. Department of Commerce
5285 Port Royal Road, Springfield, Virginia 22161
Price: Printed Copy $7.25; Microfiche $3.00

This report was prepared as an account of work sponsored by an agency of the United States Government. Neither the United States Government nor any agency thereof, nor any of their employees, contractors, subcontractors, or their employees, makes any warranty, express or implied, nor assumes any legal liability or responsibility for any third party's use or the results of such use of any information, apparatus, product or process disclosed in this report, nor represents that its use by such third party would not infringe privately owned rights.

LOCKHEED MARTIN ENERGY RESEARCH LIBRARIES

3 4456 0515148 4

ORNL-5406/R1
Dist. Category UC-71

Contract No. W-7405-eng-26

CHEMICAL TECHNOLOGY DIVISION

# SAFETY ANALYSIS REPORT FOR PACKAGING (SARP) OF THE OAK RIDGE NATIONAL LABORATORY SHIPPING CASK D-38

Revision 1

W. D. Box
L. B. Shappert
R. D. Seagren
C. D. Watson
C. R. Hammond**
B. B. Klima*

*Retired. Current address: Roane State Community College, Harriman, Tennessee.

**UCC-ND Engineering.

Date Published: September 1979

OAK RIDGE NATIONAL LABORATORY
Oak Ridge, Tennessee 37830
operated by
UNION CARBIDE CORPORATION
for the
DEPARTMENT OF ENERGY

# TABLE OF CONTENTS


| | Page |
|---|---|
| ABSTRACT | 1 |
| 1. INTRODUCTION | 1 |
| 1.1 Description of the Package | 2 |
| 1.2 Contents of the Package | 2 |
| 2. STRUCTURAL EVALUATION | 2 |
| 2.1 Structural Design | 5 |
| 2.1.1 Discussion | 5 |
| 2.1.2 Fabrication procedure | 5 |
| 2.1.3 Eutectic formation | 5 |
| 2.1.4 Thermal cycling growth | 6 |
| 2.2 Cask Weight | 6 |
| 2.3 Mechanical Properties of Materials | 6 |
| 2.3.1 Dynamic properties of uranium | 8 |
| 2.3.2 Shear strength of uranium | 11 |
| 3. GENERAL STANDARDS FOR ALL PACKAGES | 11 |
| 3.1 Chemical and Galvanic Reactions | 11 |
| 3.2 Package Closure | 12 |
| 3.3 Package Lifting Devices | 12 |
| 3.3.1 Cask lifting trunnions | 12 |
| 3.3.2 Skid tie-down rings used for lifting | 19 |
| 3.4 Closure-Plug Lifting Device | 23 |
| 3.5 Tie-Down Device | 27 |
| 3.5.1 Tie-down bolts | 28 |
| 3.5.2 Tie down of cask to vehicle | 33 |
| 4. STANDARDS FOR TYPE B AND LARGE QUANTITY PACKAGING | 38 |
| 4.1 Load Resistance | 38 |
| 4.2 External Pressure | 40 |
| 5. COMPLIANCE WITH STANDARDS FOR NORMAL CONDITIONS OF TRANSPORT | 41 |
| 5.1 Heat | 41 |
| 5.1.1 Heat transfer tests | 41 |
| 5.2 Cold | 43 |
| 5.3 Pressure | 43 |
| 5.4 Vibration | 44 |

5.5 Water Spray ..... 44
5.6 Free Drop ..... 44
5.7 Penetration ..... 44
5.8 Compression ..... 44

6. COMPLIANCE WITH STANDARDS FOR HYPOTHETICAL ACCIDENT CONDITIONS ..... 45
6.1 Free Drop ..... 46
6.1.1 Impact on top corner ..... 46
6.1.2 Impact on top end ..... 46
6.1.3 Impact on side ..... 51
6.2 Puncture ..... 55
6.3 Thermal Evaluation ..... 57
6.3.1 Hypothetical thermal accident condition discussion ..... 57
6.3.2 Thermal properties of materials ..... 58
6.3.3 Thermal accident analysis ..... 58
6.4 Water Immersion ..... 58

7. CONTAINMENT ..... 62
7.1 Containment Boundaries ..... 62
7.2 Requirements for Normal Conditions of Transport ..... 62
7.3 Containment Requirement During the Hypothetical Accident ..... 62
7.4 2R Container Design[21] ..... 63

8. CRITICALITY ..... 70
8.1 Evaluation of a Single Package ..... 70

9. SHIELDING EVALUATION ..... 70
9.1 Discussion and Results ..... 70

10. QUALITY ASSURANCE ..... 70
10.1 Fabrication, Inspection, and Acceptance Tests ..... 70

11. APPENDICES ..... 71
11.1 Appendix A: Drawings ..... 73
11.2 Appendix B: Approval Documents ..... 79
11.3 Appendix C: Computer Program to Calculate Corner Drop Negative Acceleration Forces ..... 89
11.4 Appendix D: Computer Program to Calculate Side Drop Negative Acceleration Forces ..... 101
11.5 Appendix E: Inspection of ORNL Shipping Cask D-38 to Verify Integrity of Fabrication ..... 105
11.6 Appendix F: Operating and Inspection Procedures ..... 109
11.7 Appendix G: The Evaluation of Stress in a Curved Beam ..... 117

12. REFERENCES ..... 121

# SAFETY ANALYSIS REPORT FOR PACKAGING (SARP) OF THE OAK RIDGE NATIONAL LABORATORY SHIPPING CASK D-38

W. D. Box, L. B. Shappert, R. D. Seagren, B. B. Klima*,
C. R. Hammond**, and C. D. Watson

## ABSTRACT

An analytical evaluation of the Oak Ridge National Laboratory Shipping Cask D-38 (solids shipments) was made to demonstrate its compliance with the regulations governing off-site radioactive material shipping packages. The evaluation encompassed five primary categories: structural integrity, thermal resistance, radiation shielding, nuclear criticality safety, and quality assurance. The results of the evaluation show that the cask complies with the applicable regulations.

## 1. INTRODUCTION

The ORNL Shipping Cask D-38 was developed at the Oak Ridge National Laboratory. The design was analyzed in 1968[1] and reevaluated in 1974 to demonstrate compliance with the regulations. The results of the analyses are presented in Sects. 2 through 10 of this report. The package was inspected to ensure that it was built in accordance with the drawings presented in Appendix A (Sect. 11.1).

The primary use of the container is to provide shielding, impact resistance, and thermal resistance for its contents during both normal transport and hypothetical accident conditions. The package is designed to ship fissile and large quantities of radioactive materials as solids. The package is authorized to be shipped by vessel and motor vehicle. It complies with the Nuclear Regulatory Commission (NRC) regulations contained in the *Code of Federal Regulations,* Title 10, Part 71,[2] *DOE Manual* Chapter 0529,[3] and DOE Immediate Action Directives (IAD) in effect as of this report date. The cask also complies with U.S. Department of Transportation regulations published in the *Code of Federal Regulations,* Title 49, Part 173.[4]

The package is also certified by the Department of Transportation as meeting the specific requirements of the International Atomic Energy Agency's (IAEA) "Regulations for the Safe Transport of Radioactive Material," Safety Series No. 6, 1967 Edition.

Calculations, engineering logic, and all related documents which demonstrate compliance with specifications are presented in subsequent sections of this report. Copies of the approval documents are reproduced in Appendix B (Sect. 11.2).

The shipping container was fabricated and originally assigned ORNL No. 4S1-148. Later, the Department of Transportation assigned Special Permit No. 5787 to the container. An interim certificate of compliance has been issued by the DOE-ORO.

*Retired. Current address: Roane State Community College, Harriman, Tennessee.

**UCC-ND Engineering Division.

## 1.1 Description of the Package

The ORNL Shipping Cask D-38 (see Appendix A) is illustrated in Fig. 1.1. The cask, weighing 1350 lbs, consists of a 22-5/8-in.-tall cylinder that has an outside diameter of 12-3/4 in. and a cavity measuring 6-1/16 in. in diameter by 13-13/16 in. deep. It is shielded by 2-3/4 in. of depleted uranium. The outside shell is 0.41-in.-thick (nominal) stainless steel, and the cavity wall is 0.28-in.-thick (nominal) stainless steel. The cask has a depleted uranium-filled closure plug that bolts into the top of the cask. This plug is sealed to the cask body by a neoprene gasket. The top of the cask is protected during shipment by a bolted-down shroud to prevent using the closure-plug lifting ears as tie-down points. The shroud is labeled, "Do Not Remove This Cover During Shipping." The shroud nuts are secured by lockwires and seals.

The cavity has a drain to permit water removal should the cask be loaded or unloaded underwater.

The cask has two 1-in.-diam lifting trunnions, each of which has a 3/8-in.-thick by 2-in.-wide outer support strap. The support strap is welded to the body and is given additional support by a triangular 1/2-in.-thick gusset plate.

Figure 1.2 shows the ORNL Shipping Cask D-38 disassembled on its skid with all of its components marked. The cask, when loaded and assembled, is shipped attached to the skid by four 1-in.-diam stainless steel bolts.

## 1.2 Contents of the Package

The cask is intended to be used to transport fissile and large quantities of radioactive material in the form of solids, including mixed fission products, fuel elements, and waste products. The solids will be shipped in metal capsules that have been sealed by welding, brazing, or swagging. These capsules will then be placed in a spec. 2R container (see Sect. 7). "Special Form" solids and "Special Form Containers" may be shipped in the inner cavity. The quantities of fissile materials carried are limited to 500 g of $^{235}U$, 350 g of $^{233}U$, or $^{239}Pu$, or 350 g of any combination.

The radioactive material shall not exceed a maximum thermal decay energy of 80 W. Quantities greater than 20 W may be carried only if the package is transported in a vehicle reserved for the sole use of the consignor. The maximum quantities shipped will be limited by external dose rates[5] and/or internal heat loads.

# 2. STRUCTURAL EVALUATION

The package complies with the structural requirements of the regulations (see Sects. 2-6). The calculations, test results, and engineering logic presented in the following sections demonstrate compliance with these performance criteria. The effects of both normal transport and specified accident conditions on the structural integrity of the package are considered.

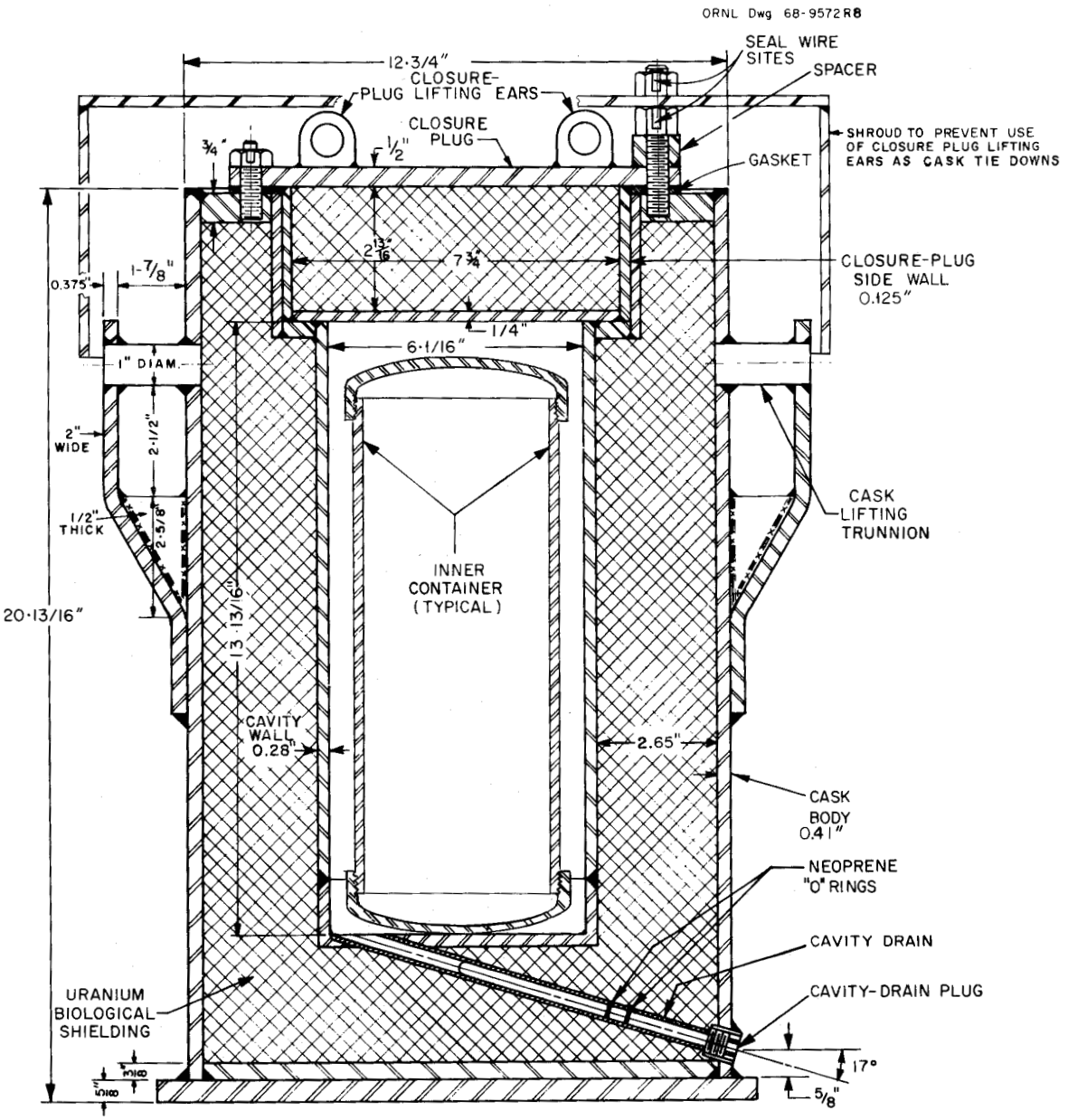


Fig. 1.1 Cross section of the ORNL Shipping Cask D-38.

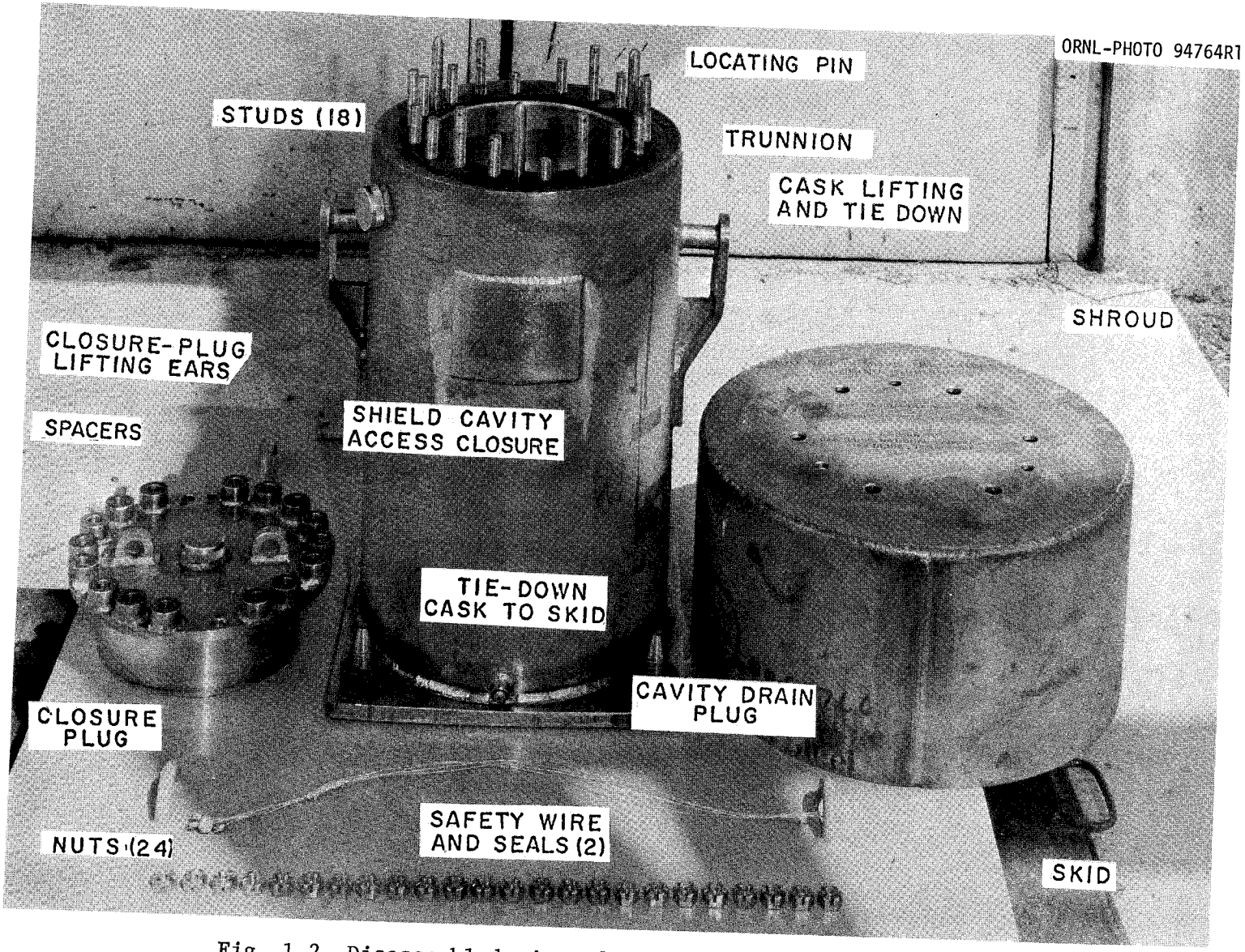


Fig. 1.2 Disassembled view of the ORNL Shipping Cask D-38 and identification of its components.

## 2.1 Structural Design

### 2.1.1 *Discussion*

The as-built drawing for the D-38 cask is shown, and all other applicable drawings are listed in Sect. 11.1. The principal structural members of the cask are: (1) the cylinder of cast uranium, which forms the cask body and its stainless steel cladding; and (2) the closure plug, which consists of one piece of uranium also clad with stainless steel plate.

The uranium used to fabricate the shielding for this cask was depleted to 0.2% $^{235}U$.

### 2.1.2 *Fabrication procedure*

*Cask body.* The 300-series stainless steel outer shell of the cask was fabricated using 12-in. sched 30 pipe to which was welded the 3/8-in.-thick bottom plate and the lifting trunnions. After assembly of this weldment, the interior of the outer shell was machined to ensure a 10-mil-diam clearance between it and the outer diameter of the uranium casting.

The 300-series stainless steel inner shell and top were welded as a unit; the outer diameter of the shell was then machined to ensure a 10-mil-diam clearance between it and the inside diameter of the uranium casting.

The hole for the drain tube was machined into the uranium casting; the entire casting was inspected for flaws, cracks, and other discontinuities and was found to be suitable for the shield of the D-38 cask.

The uranium casting was assembled inside the outer shell; the inner shell was then inserted into place. The drain tube was inserted into its prepared hole, and a seal weld was made to join the inner shell and the drain tube. After inspection of the weld, the exterior of the drain tube was seal welded to the outside of the cask. After inspection of the second weld, the final seal weld was run between the top of the outer shell and the top plate of the inner shell; this weld was not a full-penetration weld.*

*Cask cover.* The closure plug was constructed in the same manner as the body. The top plate and outer shell were machined after fabrication to provide a 10-mil-diam clearance, between the uranium casting and the plug assembly. After assembly of the uranium in the plug, the bottom closure plate was seal welded to the plug; this was not a full-penetration weld.

### 2.1.3 *Eutectic formation*

At an interface of stainless steel and uranium, an alloy with a melting point of about 1340°F can be formed under certain conditions. In the D-38 cask, this possibility is minimized because of the gap designed into the cask between the stainless steel weldment and the uranium shield. Helium was used to fill the gaps between the uranium shield and the stainless steel

*These welds were not full-penetration because of the differences in thickness of the two pieces of metal being joined. However, the welds are sound.

weldment. The helium atmosphere prevents oxidation of the uranium metal.

Tests have shown that after a sample sandwich of 304 stainless steel and uranium was heated to 1475°F for 1 hr, a small amount of eutectic was formed.[6] It should be noted that in this test sandwich, the surfaces of the stainless steel and the uranium were honed for intimate contact. In the D-38 cask there is a 10-mil gap between the component parts; since stainless steel has a greater thermal coefficient of expansion, this gap will increase slightly between the outer shell and the uranium shield (see Table 2.1 in Sect. 2.3).

The fire in the "hypothetical accident" (discussed in Sect. 6.3) is of only a 30-min duration, and it is possible that some eutectic will be formed; however, (1) the removal of metal due to the eutectic formation is expected to be less than 1/4 in., and the cask shielding would still be adequate to shield the source without exceeding the requirements of NRC Manual, 0529; and (2) the tests[6] indicate that insufficient eutectic would be formed under ideal conditions in a 30-min fire to erode through the sched 30 outer stainless steel shell.

### 2.1.4 *Thermal cycling growth*

The uranium metal, as cast, probably has radially orientated columnar crystals. Under adverse thermal cycling conditions, this type of crystal orientation could produce some alterations in the dimensions of the uranium castings.[7] It has been noted that if the top temperature of cycling never exceeds 300 to 350°C (572 to 662°F), growth by thermal cycling is neglible.[7] The temperatures experienced in normal transport are well below that range. The temperatures associated with the hypothetical accident thermal test are above that range, and a change in the size of the uranium castings can be expected. Should an actual fire befall the cask, the change in uranium casting size will depend on the rate of temperature rise, the duration and top temperature reached, and the rate of cooling. In any case, one cycle in which thermal ratcheting occurs will produce no effect on the integrity of the cask since the thermal expansion stresses will be at a minimum due to the slighter greater coefficient of stainless steel (see Table 2.1).

## 2.2 Cask Weight

The weight of the package, its parts, and the contents are shown in Table 2.2.

## 2.3 Mechanical Properties of Materials

The mechanical properties of uranium and stainless steel are summarized in Table 2.1.

Table 2.1. Mechanical properties of uranium and stainless steel

| Properties | Symbol | Stainless steel 300 series | Uranium[a] |
|---|---|---|---|
| **Static properties** | | | |
| Tensile yield stress, psi | $\sigma_y$ | $30 \times 10^3$[b] | $25 \times 10^3$[c] |
| Allowable shear stress, psi | $\tau_a$ | $15 \times 10^3$[d] | |
| Ultimate shear strength, psi | $\tau_u$ | $61 \times 10^3$[b] | $35 \times 10^3$[e] |
| Young's modulus, psi | E | $30 \times 10^6$[b] | $24.7 \times 10^6$[c] |
| Poisson's ratio | $\upsilon$ | 0.3[b] | 0.23[c] |
| Weight density, lb/in.$^3$ | $\gamma$ | 0.283[b] | 0.69[f] |
| Thermal expansion coefficient, $^oF$ | $\alpha$ | $9.6 \times 10^{-6}$[b] | $8.04 \times 10^{-6}$[g] |
| **Dynamic properties** | | | |
| Specific energy, in.-lb/in.$^3$ | S min | $10 \times 10^4$[e] | $4 \times 10^4$[e] |
| | S max | $26 \times 10^4$[e] | $12 \times 10^4$[e] |

[a]Beta heat treated and oil quenched.

[b]The International Nickel Company, Inc., Mechanical and Physical Properties of Austenitic Chromium-Nickel Stainless Steel at Ambient Temperatures, 1963.

[c]A. N. Holden, Physical Metallurgy of Uranium, Addison-Wesley, Reading, Mass., 1958.

[d]Fifty percent of tensile stress.

[e]J. A. Boutlet, J. H. Evans, and K. K. Chipley, Safety Analysis Report for Packaging: The ORNL Uranium-Shielded Shipping Cask, ORNL/ENG/TM-4 (1977).

[f]Handbook of Chemistry and Physics, 45th ed., Chemical Rubber Co., Cleveland, 1964.

[g]C. R. Herrington and A. E. Ruehle, Uranium Production Technology, Van Nostrand, New York, 1959.

Table 2.2. Weights of cask and contents

| Component | Weight (lb) |
|---|---|
| Shroud | 50 |
| Cask body (without closure plug) | 1100 |
| Closure plug | 150 |
| Total cask weight | 1300 |
| Approximate weight of contents | 50 |
| Total weight | 1350 |
| Skid | 175 |
| Total shipping weight | 1525 |

### 2.3.1 *Dynamic properties of uranium*

The literature contained little data concerning the dynamic compressive properties of uranium; however, tensile strength data were found in refs. 7-10. The uranium in the D-38 shipping containers was cast in a graphite mold, and the grains in the casting are probably aligned. Tensile strength data for this material are plotted in Fig. 2.1. Conservative approximations for these data are shown in Figs. 2.1 (dashed line) and 2.2. Figure 2.2 also shows compressive curves obtained by multiplying the tensile stresses by $(1 + \epsilon)/(1 - \epsilon)$. It is assumed that the true stress-strain properties of the material are the same for tension and compression.

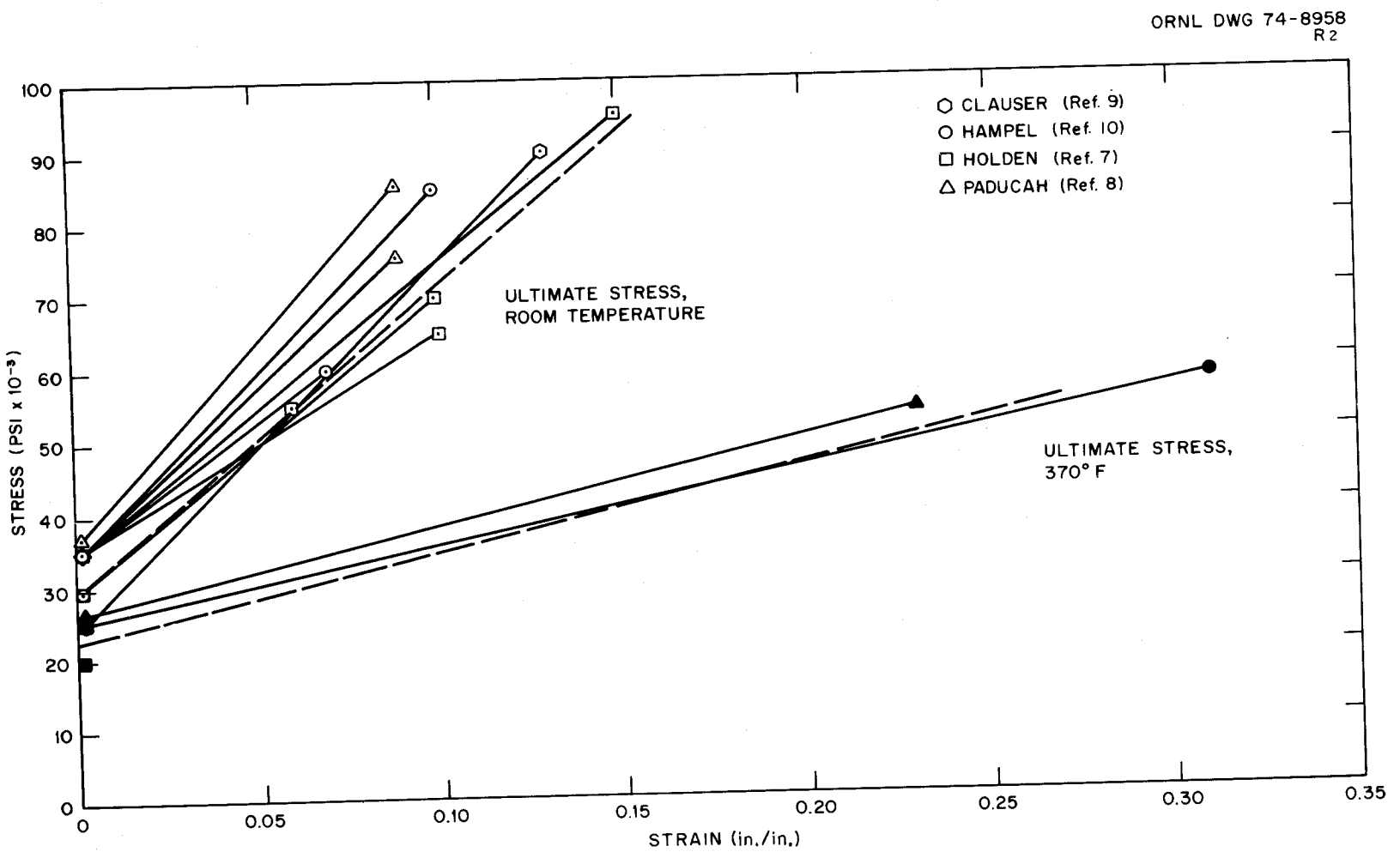


Fig. 2.1 Tensile strength data for uranium.

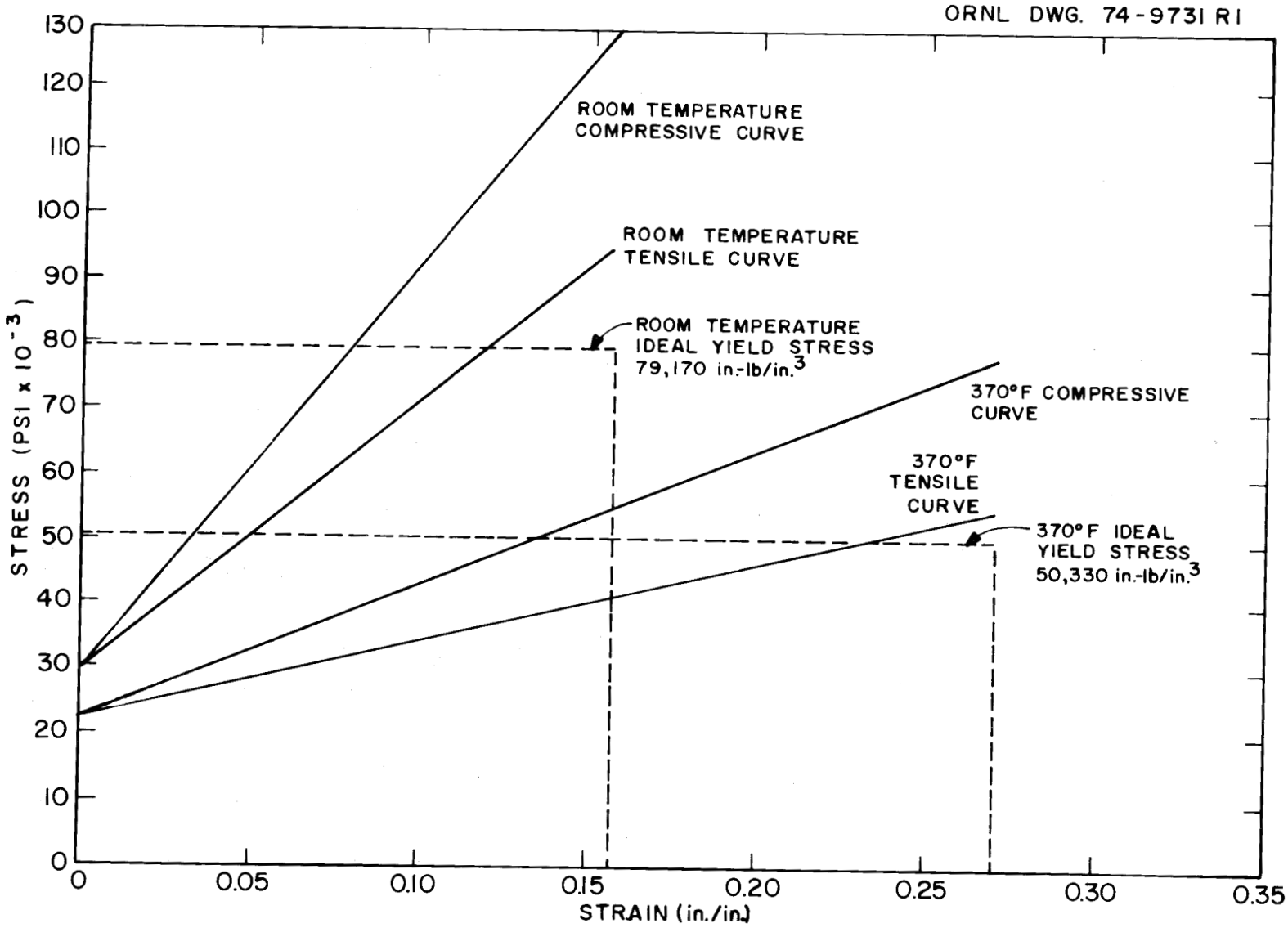


Fig. 2.2 Uranium stress-strain curves.

2.3.2 *Shear strength of uranium*

Information on the direct measurement of the ultimate shear strength of uranium was unavailable in the literature; however, ref. 11 indicates that, in general, ultimate shear strength is approximately 70% of ultimate tensile strength. Furthermore, since tensile specimens generally fail along a plane inclined 45° from the specimen axis, the ultimate shear strength ($\tau_u$) is found as follows:

$$\tau_u = \sigma_u \cos 45° = (50{,}000)(0.7) = 35{,}000 \text{ psi}, \tag{1}$$

where

$\sigma_u$ = ultimate tensile strength, 50,000 psi.

## 3. GENERAL STANDARDS FOR ALL PACKAGES

The general standards for all packaging cover the chemical and galvanic reaction of the materials of the package, closure of the package, and the lifting and tie-down devices for the package.

### 3.1 Chemical and Galvanic Reactions

The package is fabricated from stainless steel and depleted uranium. The oxidation of uranium in air at elevated temperatures was recognized in the design; therefore, the atmosphere that is used to envelop the uranium is helium. The uranium is completely clad with stainless steel plate. The cask was built using full penetration welds; the exception was the final closure weld in which penetration was about 0.5 in. Recently, the shielding cavity was evacuated to determine that no weld had failed during previous operations with the cask and to backfill with helium to prevent oxidation of the uranium. Thus, no oxide film should form on the uranium.

When uranium is in contact with stainless steel, it exhibits a tendency to alloy at the interface at a temperature of about 1340°F (see Sect. 2.1.3). Under normal conditions of transport, cask temperatures should not exceed 300°F. Therefore, no reaction between the uranium and the stainless steel is possible.

The fissile and radioactive contents of the package are in solid form and are contained in inner containers (see Sect. 8). "Special Form" material may also be shipped in this package as well as material in "Special Form containment." These containers and material will be in contact with the stainless steel cladding and will not react with the cladding.

Experience and inspection have indicated no chemical, galvanic, or other reaction between the cladding and the containers, or between the containers and their solid contents.

## 3.2 Package Closure

The standards specify that the package shall be equipped with a positive closure that will prevent inadvertent opening. The package closure is held in place by eighteen 1/2 in. by 13-NC studs. Two of the studs are short and the nuts rest directly on the top flange of the closure plug. The other 16 studs have a 3/4-in. tall by 1-1/8-in.-OD spacer between the plug top flange and the nut to provide an increased energy absorption capacity. Six of the taller studs are extra long to allow space for the protective shroud and the additional nuts that will hold this shroud in place. All of the studs are drilled and the nuts are slotted so that each nut can be equipped with a seal wire. The cask closure is sealed with a 1/8-in.-thick neoprene gasket. Thus, with the nuts of the cover and the shroud safety wired, this package is equipped with a positive closure that will prevent inadvertent opening.

## 3.3 Package Lifting Devices

If there is a system of lifting devices that is a structural part of the package, the regulations require that this system shall be capable of supporting three times the weight of the loaded package without generating stress in any material of the package in excess of its yield strength.

### 3.3.1 *Cask lifting trunnions*

Two cask lifting devices are provided in the form of radial trunnions, each fitted into holes in the cask outer shell and supported outboard by a 2-in.-wide, 3/8-in.-thick strap. It is assumed that only one of these devices will be used to lift the loaded cask. Figure 3.1 shows two views of a trunnion and support. The load required to support the cask will be on-line through the center-of-mass of the cask, and the trunnion as shown in Fig. 3.2. The center-of-mass was assumed to be midway between the top plate of the shielded plug and the bottom of the base plate on the central axis of the cask. This point is ~10.75 in. above the base. The lifting force is oriented 36° to the plane of the base plate, which is taken to be the horizontal datum. This force can be resolved into two components, $F_H = 3\underline{W} \cos 36°$ in the reference horizontal plane and $F_V = 3\underline{W} \cos 36°$ perpendicular to the reference plane, where $\underline{W}$ is the weight of the loaded package.

The component $F_V$ is resisted by both the outboard strap and the cask wall at the trunnion. Since the load is applied near the strap, the strap absorbs all of the load. Suppose further that the entire load, $F_V$, is distributed uniformly over the trunnion-bearing area, as shown in Fig. 3.3. The magnitude of the distributed load, w, is

$$w = 3\underline{W} \sin 36° / L = 3(1350 \text{ lb}) \sin 36° / 1 \text{ in.} = 2380 \text{ lb-in.}, \qquad (2)$$

ORNL DWG 78-17799R

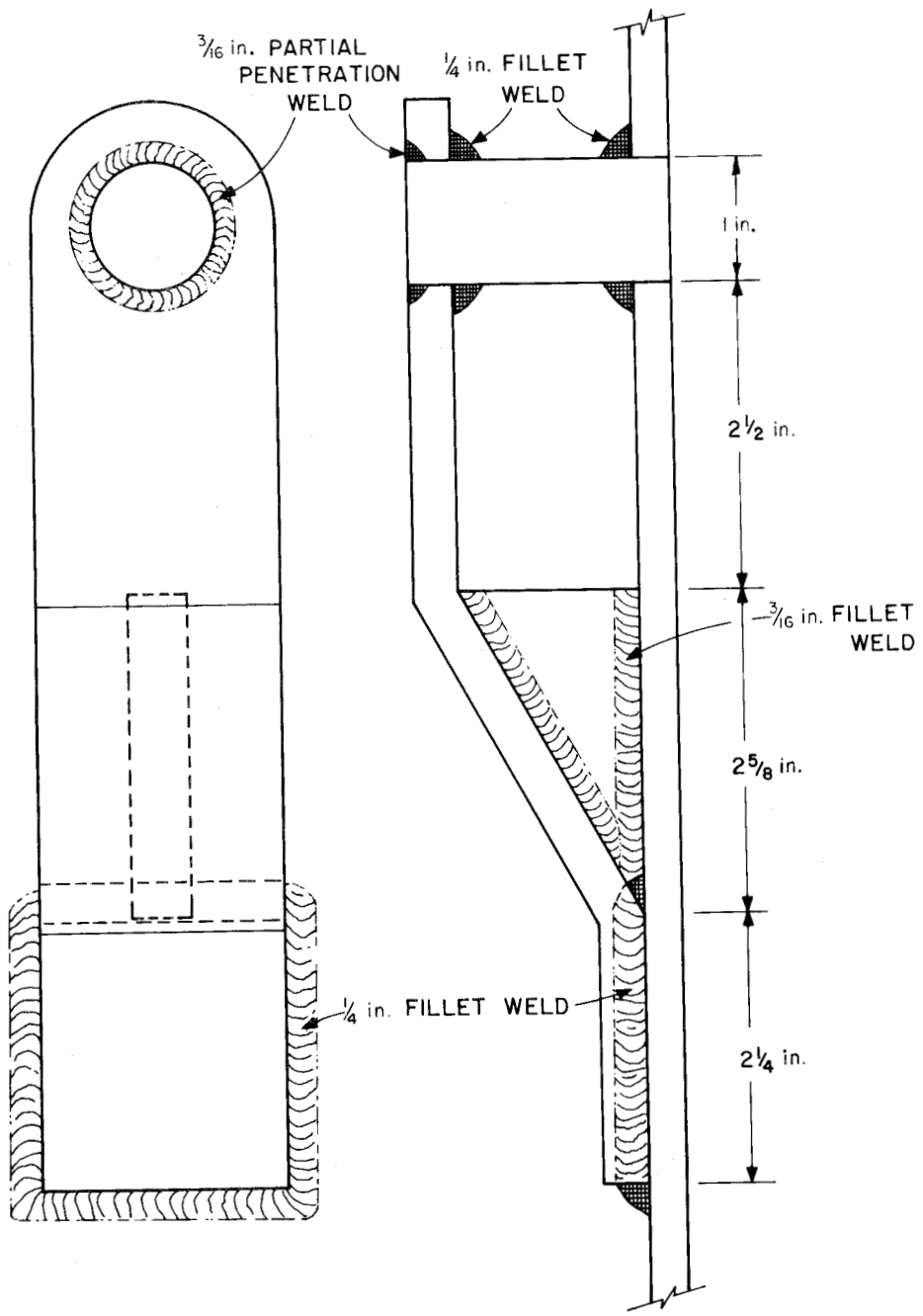


Fig. 3.1 Cask trunnion and support.

ORNL DWG 78-17800

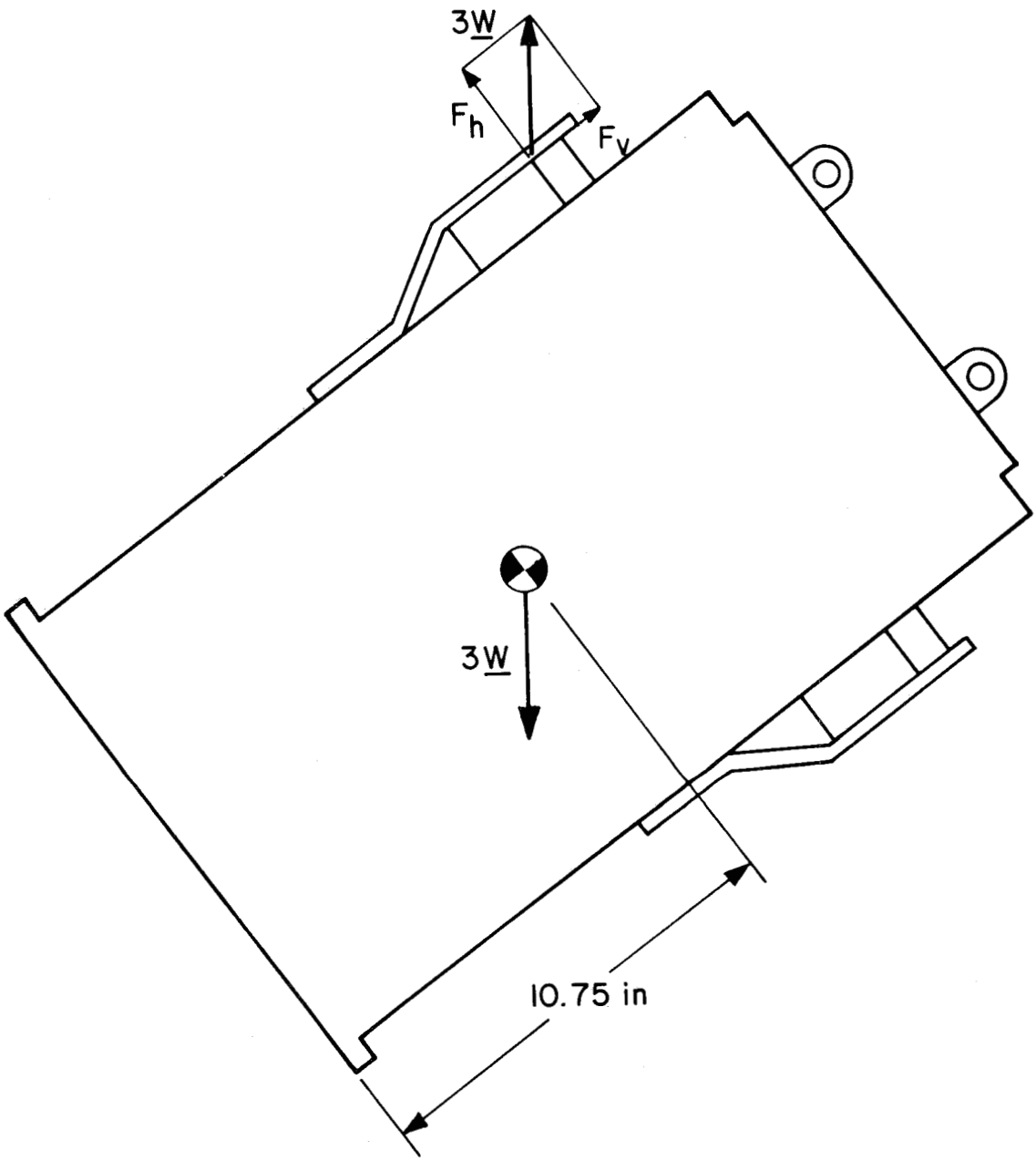


Fig. 3.2 Lifting configuration for analysis.

ORNL DWG 78-17801

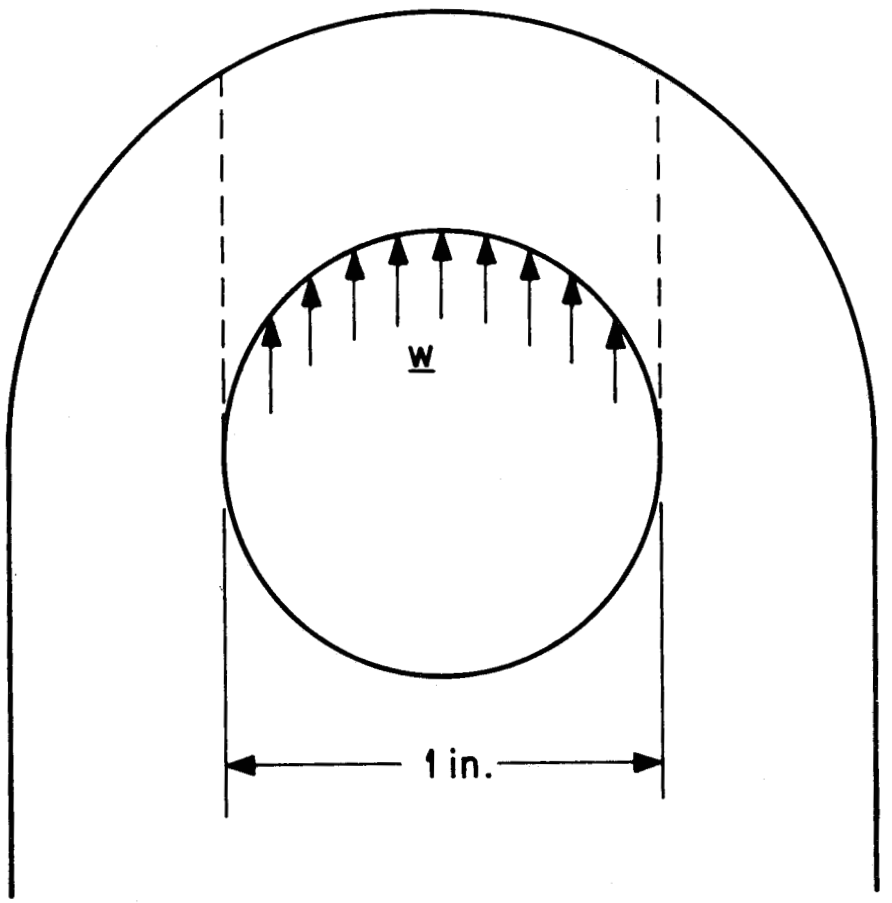


Fig. 3.3 Trunnion outer support strap.

This load is resisted essentially by a curved beam spanning the hole into which the trunnion is fixed. It follows that the most severe moment is given by $wL^2/12$; the most severe shear is expressed by $-wL/2$. The critical locations on the beam are at the fixed ends.

Stresses in the curved beam are calculated using equations obtained from J. T. Oden.[12] For convenience, these equations have been included in Appendix G. The maximum stress normal to a cross section of the beam occurs at the lower face where

$$\sigma_n = 82.4\left(\frac{wL^2}{12}\right) = 82.4\left(\frac{2380(1)^2}{12}\right) \tag{3}$$

$$= 16{,}300 \text{ psi.}$$

Other stresses are zero at this location; consequently, the maximum shear stress from Mohr's circle is simply

$$(16{,}300 \text{ psi}/2) \cong 8200 \text{ psi.} \tag{3a}$$

In a curved beam, the point where the shear stress on a cross section is greatest is not known *a priori.* It was necessary to calculate stresses at many points using the program described in Appendix G to find the greatest shear stress; the numerical coefficients used in Eqs. (4), (5), and (6) were calculated using this program. The greatest stress in this case was located 0.707 in. below the centroid of the cross section. There, the shear stress was

$$\tau = 8.58\left(\frac{-wL}{2}\right) = 8.58\left(\frac{-2380(1)}{2}\right) \tag{4}$$

$$= -10{,}200 \text{ psi.}$$

This shear was accompanied by a normal stress of

$$\sigma_n = 11.46\left(\frac{wL^2}{12}\right) \tag{5}$$

$$= 2300 \text{ psi.}$$

and a radial stress of

$$\sigma_r = 11.44\left(\frac{wL^2}{12}\right) \tag{6}$$

$$= 2300 \text{ psi.}$$

From Eqs. (4), (5), and (6) and using Mohr's circle indicates that the maximum shear stress is

$$\tau_{max} = 10{,}200 \text{ psi.} \tag{6a}$$

All of the stresses in the trunnion support strap are below the allowable shear stress, 15,000 psi, from Table 2.1.

As shown in Fig. 3.1, the strap is connected to the cask through 1/4-in. fillet welds and to a gusset plate through 3/16-in. fillet welds. Bending deformation of the welds is minimized by the constraint provided by the trunnion and gusset, so pure shear in welds is assumed. The total area of weld roots is therefore:

$$\begin{aligned} A &= 2\left(\frac{3\cos 45^\circ}{10}\right)(2.625) + 2\left(\frac{1\cos 45^\circ}{4}\right)(2.25) \\ &\quad + 2\left(\frac{1\cos 45^\circ}{4}\right)(1.50) \\ &= 2.02 \text{ in}^2. \end{aligned} \tag{7}$$

The average shear stress at the weld root is then

$$\begin{aligned} \tau &= \frac{3W}{A} = \frac{3(1350)}{2.02} \\ &= 2000 \text{ psi,} \end{aligned} \tag{8}$$

which is well below the allowable limit.

The welds between the trunnion and the cask must resist pull-out from the force $F_H$ (see Fig. 3.2). From Fig. 3.1, the root area of the weld is

$$\begin{aligned} A &= \pi\left[(0.5 + 0.25\cos 45^\circ)^2 - (0.5)^2\right] \\ &= 0.654 \text{ in}^2. \end{aligned} \tag{9}$$

The shear stress generated in the weld is

$$\tau = \frac{3\underline{W}\cos 36^\circ}{A} = \frac{3(1350)\cos 36^\circ}{0.654} \tag{10}$$

$$= 5000 \text{ psi},$$

which is below the allowable limit.

If the entire $3\underline{W}$ load were applied at the midpoint of the trunnion and no credit were given to supports to resist moments, then the maximum moment in the trunnion would be

$$M = \frac{3\underline{W}L}{4}, \tag{11}$$

where

$L$ = unsupported length.

The maximum normal stress, also a principal stress, would be

$$\sigma = \frac{Mc}{I} = \left[\frac{(3\underline{W}L/4)(1/2)}{\pi/4\,(1/2)^4} = \frac{3(1350)}{\pi(1/2)^3}\right. \tag{12}$$

$$= 10{,}300 \text{ psi},$$

where

c = distance from neutral axis to the extreme fiber,

$I$ = is moment of inertia of the trunnion.

Other principal stresses at that point would be zero, and the maximum shear stress would be

$$\tau_{max} = 10{,}300/2 \cong 5200 \text{ psi}. \tag{13}$$

According to Roark and Young[13], the highest shear stress on any cross-sectional surface in a solid circular cylinder is $4/3(V/A)$, where V is the shear force and A is the area of the section. For the $3\underline{W}$ load on the trunnion,

$$\tau = \left(\frac{4}{3}\right)\left(\frac{3\underline{W}}{2}\right)\left(\frac{1}{0.654}\right) \tag{14}$$

$$= 4100 \text{ psi}.$$

Since this shear occurs at the centroid of the section, normal stresses are zero and it follows that

$$\tau_{max} = \tau = 4100 \text{ psi.} \tag{14a}$$

### 3.3.2 *Skid tie-down rings used for lifting*

The tie-down rings on the skid or pallet are exposed during shipping; hence, it is conceivable that they be used to lift the cask and skid assembly. Since the rings are well below the center of gravity of the assembly, it would be necessary to use all four rings to lift the cask. It is assumed that lifting cables will be essentially vertical, as shown in Fig. 3.4. If the ring is represented as a curved beam with fixed ends, the most critical moment in each ring is

$$M = \frac{3\underline{W}_T}{4L/8} = \frac{3(1525)(25/4)}{8} \tag{15}$$

$$= 360 \text{ in. lb,}$$

where

$\underline{W}_T$ = weight of the loaded container plus skid,

$L$ = mean radius of the ring.

The largest stress normal to the cross section of the ring, $\sigma_n$, caused by bending is

$$\sigma_n = 19{,}600 \text{ psi,} \tag{16}$$

where the stress was determined by using the program described in Appendix G. This stress occurs at the extreme inside fiber near either fixed end of the ring. A stress, $\sigma_a$, is also developed to resist the axial force in the ring at this location. We have

$$\sigma_a = \frac{3\underline{W}_T}{8A} = \frac{3(1525)}{8\pi(5/16)^2} \tag{17}$$

$$= 1900 \text{ psi.}$$

Total stress at the inside fiber is the sum of these two stresses, or

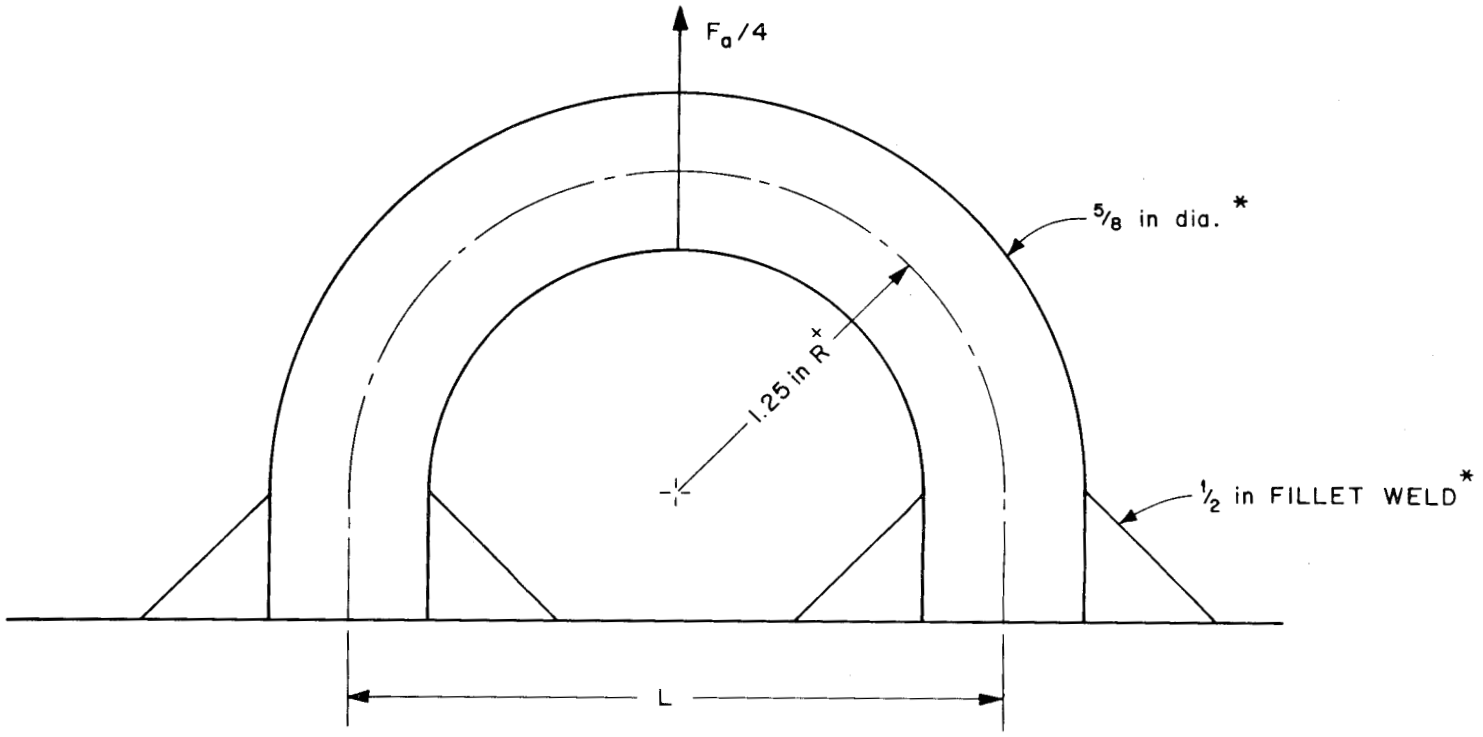


*DIMENSION MEASURED ON ONE SAMPLE
+DIMENSION SCALE FROM AS-BUILT DRAWING

Fig. 3.4 Tie-down ring.

$$\sigma = \sigma_n + \sigma_a = 19{,}600 + 1900 \tag{18}$$

$$= 21{,}500 \text{ psi.}$$

The maximum shear stress at this location is simply

$$\tau = \frac{\sigma}{2} = \frac{21{,}500}{2} \tag{19}$$

$$\simeq 10{,}800 \text{ psi,}$$

which is below the allowable limit for mild steel.

Maximum shear force on each weld of the four rings is:

$$V = \frac{3W_T}{4(2)} = \frac{3(1525)}{8} \tag{20}$$

$$= 570 \text{ lb.}$$

The largest shear stress on the cross section was found to be 5300 psi using the program (see Appendix G), and since the cross section was the plane of maximum shear stress,

$$\tau = 5300 \text{ psi,} \tag{21}$$

which is well below the allowable limit.

A shear force does not act on the weld fastening the ring to the skid, but the weld must resist the lifting forces in shear across the throat of the weld. The throat is assumed to be on a cone inclined at an angle of 45° to the skid top. From Fig. 3.4, the moment of inertia of the weld throat is

$$I = \frac{\pi}{4}\left[(0.3125 + 0.5\cos 45°)^4 - (0.3125)^4\right] \tag{22}$$

$$= 0.147 \text{ in}^4.$$

The area of a weld is

$$A = \pi\,[(0.3125 + 0.5 \cos 45^\circ)^2 - (0.3125)^2] \tag{23}$$

$$= 1.087 \text{ in}^2.$$

Hence, the maximum stress, which occurs in an extreme fiber of the weld is

$$\tau = \frac{3W_T}{A} + \frac{Mc}{I} = \frac{3(3125)}{8} + \frac{360(0.3125)}{0.147} \tag{24}$$

$$= 1300 \text{ psi},$$

where

c = outside radius of the weld.

Finally, the tear-out shear developed in the top plate of the skid must now be evaluated. The shear area in the 1/4-in.-thick plate is

$$A_p = t\pi D = 0.25\pi(1.625) \tag{25}$$

$$= 1.276 \text{ in}^2.$$

where

D = diameter of plug,

t = plate thickness.

The average shear stress is only

$$\tau = \frac{3W_T}{A_p} = \frac{3(1525)}{8(1.276)} \tag{26}$$

$$= 450 \text{ psi},$$

and thus, the plate and the rest of the tie-down system are capable of withstanding the lifting load.

### 3.4 Closure-Plug Lifting Device

If there is a system of lifting devices that is a structural part of the closure plug only, the regulations require that this system be capable of supporting three times the weight of the closure plug without generating stress in any material of the plug in excess of its yield strength. These closure-plug lifting lugs are quite small in nature and the hole in the center of each will accept neither a cask-lifting cable nor a hook of any size used in lifting the cask. Therefore only the weight of the closure-plug is used in this evaluation. As an added precaution, the cask is shipped with its shroud in place, which prevents the use of these lugs for lifting or tie-down purposes.

The cask has two closure-plug lifting lugs, one of which is shown in Fig. 3.5. One lug will be used to support the plug, as shown in Fig. 3.6. The center-of-mass of the plug is assumed to be midway between the top and bottom plates, or 1.97 in. below the top plate surface. The angle between the lifting load and the top plate surface is determined to be 41° as shown in Fig. 3.6.

The entire load, three times the weight of the plug, is resisted by the top part of the lug acting as a curved beam. Stresses are calculated by assuming that the lug is acting as a curved beam spanning the hole in the lug and having fixed ends. The largest moment, M, produced in such a beam by a point load is

$$M = \frac{3W_p L}{8} = \frac{3(150)(0.75)}{8} \tag{27}$$

$$= 42 \text{ in. lb.}$$

The largest shear force is

$$V = \frac{3W_p}{2} = \frac{3(150)}{2} \tag{28}$$

$$= 225 \text{ lb.}$$

Stresses are calculated at many points across the 0.5-in.-wide and 0.25-in.-deep cross section of the beam using the program described in Appendix G. The largest stress normal to the cross section was found to be

$$\tau_{max} = \frac{9720}{2} \cong 4900 \text{ psi.} \tag{29}$$

ORNL DWG 78-17803R

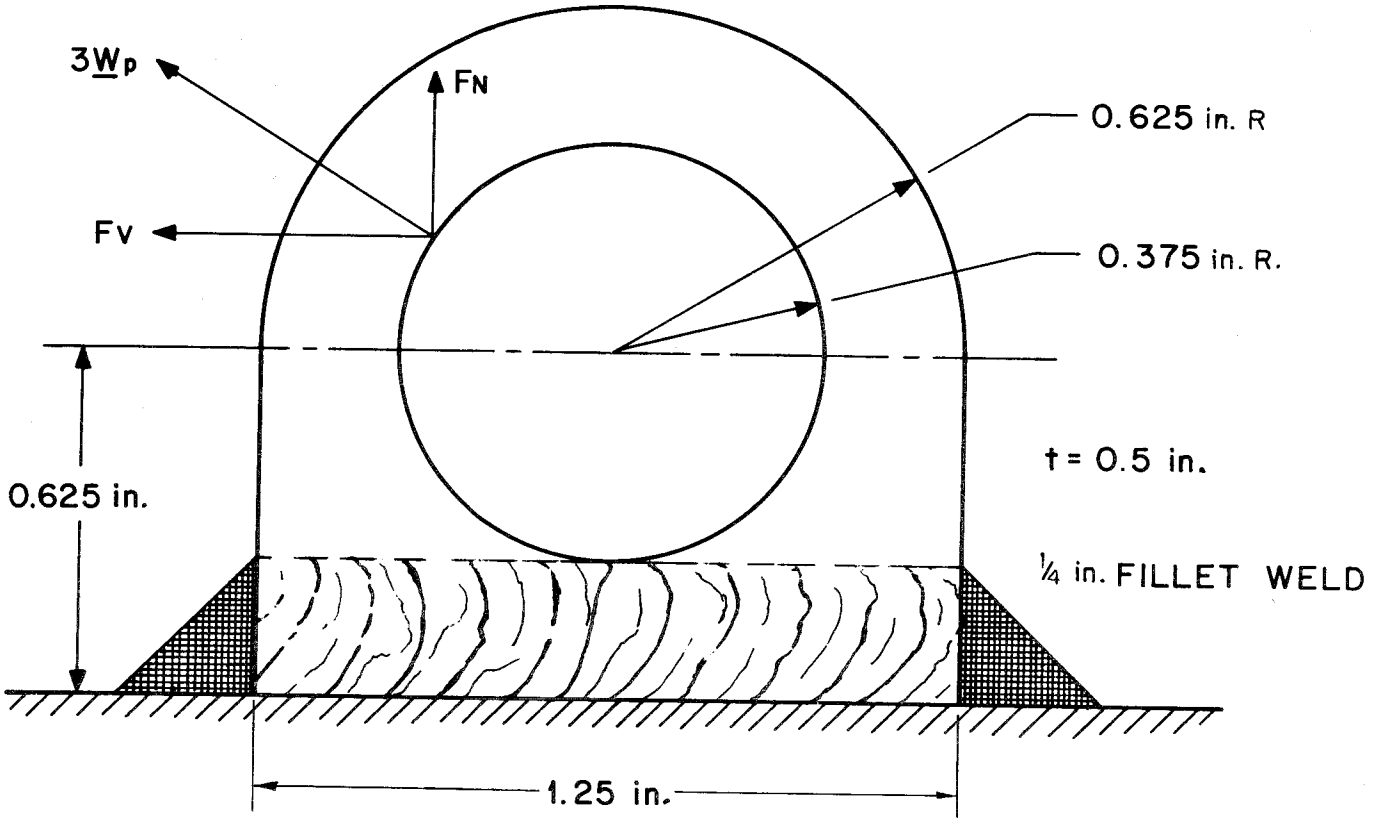


Fig. 3.5 Closure plug lifting lug.

ORNL DWG 78-17804

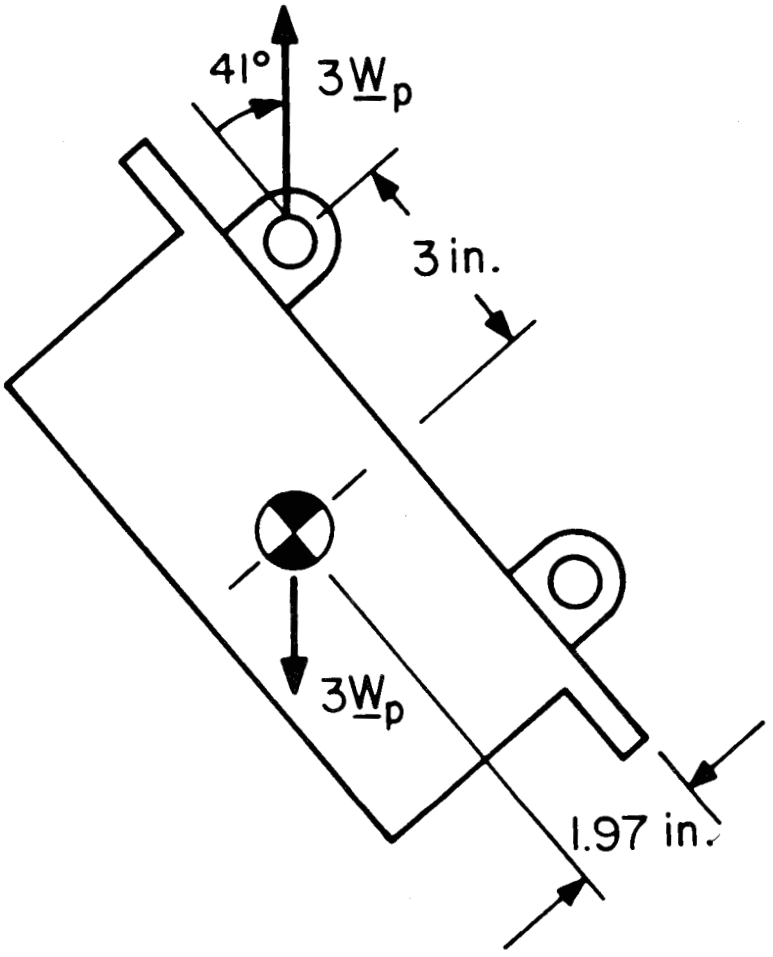


Fig. 3.6 Closure plug lifting configuration for analysis.

at the inside surface of the beam. This stress is a principal stress and is located at the inside surface; other stresses at that surface are zero. From Mohr's circle

$$\tau_{max} = 9720 \text{ psi}/2 \cong 4900 \text{ psi}. \tag{30}$$

The largest shear stress on the cross section was found to be

$$\tau = 4860 \text{ psi}, \tag{30a}$$

and this stress was accompanied by a normal stress of

$$\sigma_n = 1050 \text{ psi} \tag{30b}$$

and a radial stress of

$$\sigma_r = 1050 \text{ psi}. \tag{30c}$$

In this case, at the point of greatest shear, the maximum shear stress is

$$\tau_{max} = 4900 \text{ psi}. \tag{31}$$

The $\tau_{max}$ at both locations are well below the allowable limit.

The lifting force can be broken into two components: $F_v$, parallel to the top plate, and $F_n$, normal to the top plate. These force components have magnitudes of

$$\left.\begin{aligned} F_v &= 3\underline{W}_p \cos 41° = 2.27\ \underline{W}_p, \\ F_n &= 3\underline{W}_p \sin 41° = 1.96\ \underline{W}_p, \end{aligned}\right] \tag{32}$$

and are pictured in Fig. 3.5. The weld connecting the lifting lug to the top plate must carry a normal force of 1.96 $\underline{W}_p$, a direct shear of 2.27 $\underline{W}_p$, and a moment of

$$M = F_v(0.625 + 0.625 \sin 41°) - F_n(0.625 \cos 41°) = 1.43\ \underline{W}_p. \tag{33}$$

From Fig. 3.5, the weld is 0.25 in. No credit will be taken for any additional partial penetration weld that cannot be observed directly. The moment of inertia of the weld root is

$$I = \frac{1}{12}\,[(0.5) + 2(0.25)\cos 45°]\,[(1.25) + 2(0.25)\cos 45°)^3] - (0.5)(1.25)^3 \tag{34}$$

$$= 0.212 \text{ in}^4.$$

From Fig. 3.5, the area of the weld root is

$$A = [(0.5) + 2(0.25)\cos 45^\circ)]\,[(1.25) + 2(0.25)\cos 45^\circ)] - (0.5)(1.25) \tag{35}$$

$$= 0.744 \text{ in}^2.$$

The peak vertical stress, $\tau$, assumed to occur in shear across the weld root, is

$$\tau = \frac{F_n}{A} + \frac{Mc}{I} = \frac{1.96\,\underline{W}_p}{0.744} + \frac{[1.43\,\underline{W}_p(1.25) + 2(0.25)(\cos 45^\circ)]}{2(0.212)} \tag{36}$$

$$= 1210 \text{ psi},$$

where

c = distance from the centroid of the extreme fiber.

The direct shear is assumed to be distributed uniformly over the area of the weld. We have

$$\tau = \frac{F_v}{A} = \frac{2.27\,\underline{W}_p}{0.744} = 3.05\,\underline{W}_p \tag{37}$$

$$= 460 \text{ psi}.$$

All stress are below the allowable limit, and the closure-plug lifting device is acceptable.

### 3.5 Tie-down Device

Regulations require that a system of tie-down devices that are a structural part of the package be capable of withstanding: (1) a static force applied to the center of gravity of the package with a vertical component equal to two times the weight of the package and its contents, (2) a horizontal component along the direction of travel equal to ten times the weight of the package and its contents, and (3) a horizontal component in the transverse direction equal to five times the weight of package plus contents. No stresses in any material of the package generated by these loads shall exceed the yield stress of that material. Further, the failure of any tie-down device may not impair the ability of the package to meet other requirements.

The ORNL Shipping Cask D-38 is normally shipped bolted to its skid, as shown in Fig. 1.2. The plan for tying the cask to the vehicle is shown in Fig. 3.7. Four wire ropes tie the skid to the vehicle. In addition, four wire ropes are attached to the trunnions and tie the cask directly to the vehicle. A shroud denies the use of the closure plug as a tie-down device.

Both the set of bolts and the wire ropes meet the tie-down requirements independently and both are examined below.

### 3.5.1 *Tie-down bolts*

The cask is attached to the skid by four 1-in. 8-NC bolts. The effect of the two horizontal forces will be determined first and then combined with the effect of the vertical force. Figure 3.8 shows the two horizontal forces superimposed on the plane between the cask and skid. The horizontal forces are combined in a vector sum:

$$R = [(10\underline{W})^2 + (5\underline{W})^2]^{1/2} = 11.2\underline{W} , \tag{38}$$

where

$\underline{W}$ = the weight of the cask plus contents.

It is assumed that the cask acts as a beam cantilevered about its base. The moment produced by the horizontal static forces at the center of mass of the cask, 10.75 in. above the base plane, is resisted by the bolts in tension and some part of the base plate in compression. As for a beam in bending, a neutral axis can be identified on which normal stresses are zero and which separates a zone of tensile stresses from one of compressive stresses. The axis is shown in Fig. 3.8 as line n-n and is perpendicular to the force R. Distances of the bolts, the neutral axis, and the x-x axis (which passes through the corner of the base plate) are identified on Fig. 3.8. The specific bolt distances are listed in Table 3.1. When only the horizontal applied forces are considered, the sum of forces in the vertical direction at the base must equal zero. The neutral axis is located by balancing tensile with compressive forces at the base plane. Stresses are assumed to vary linearly with distance from the neutral axis, but stresses are assumed to be uniform across each bolt. We have

$$4EA_b\,(d_c - a) - \tfrac{1}{2}E\,(2b)(b)(a/3) = 0, \tag{39}$$

where

$E$ = Young's modulus of the bolt or base plate,

$A_b$ = the cross-sectional area of one bolt = 0.5510 in.$^2$,[14]

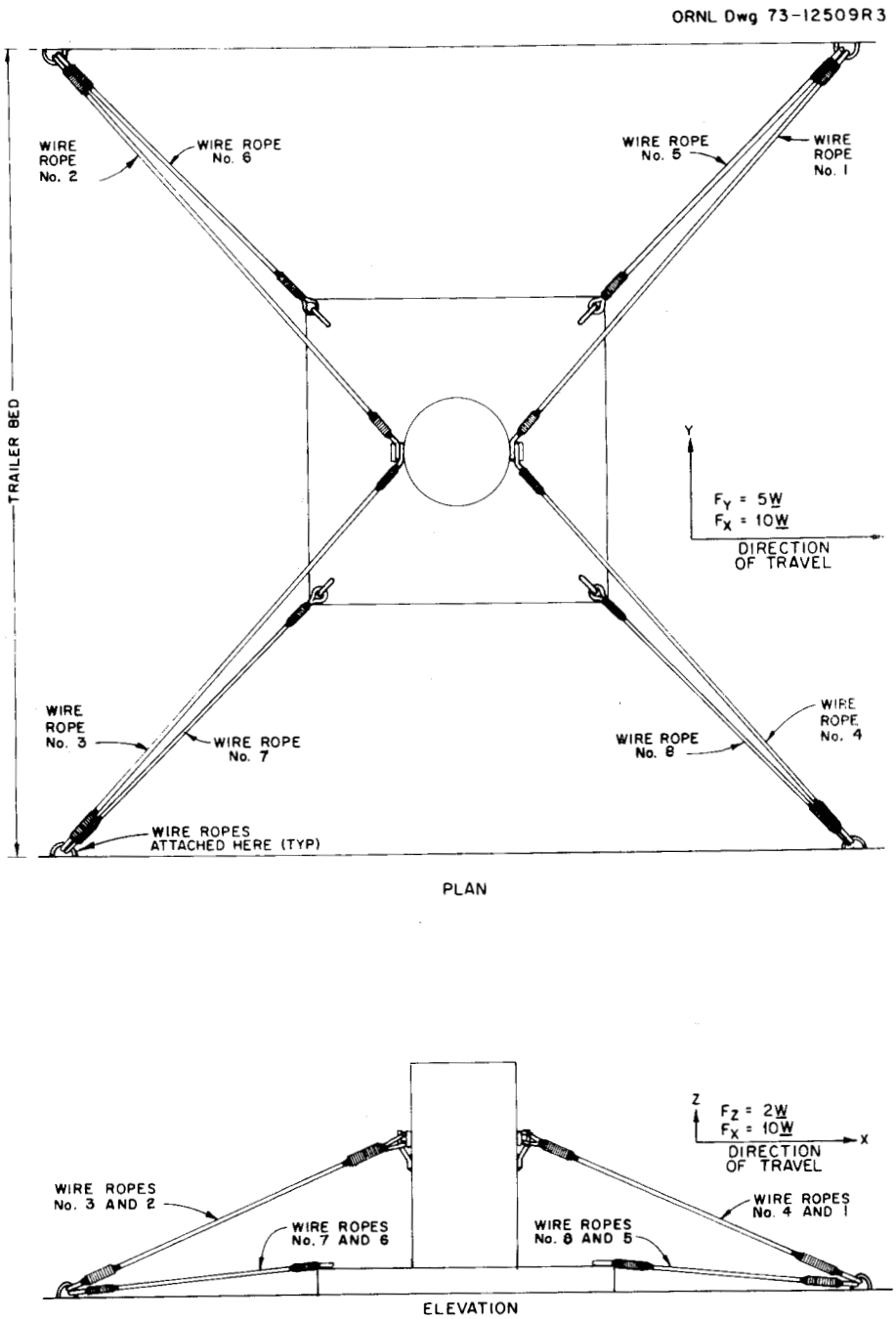


Fig. 3.7 Tie down of cask to vehicle.

ORNL Dwg 79-20R

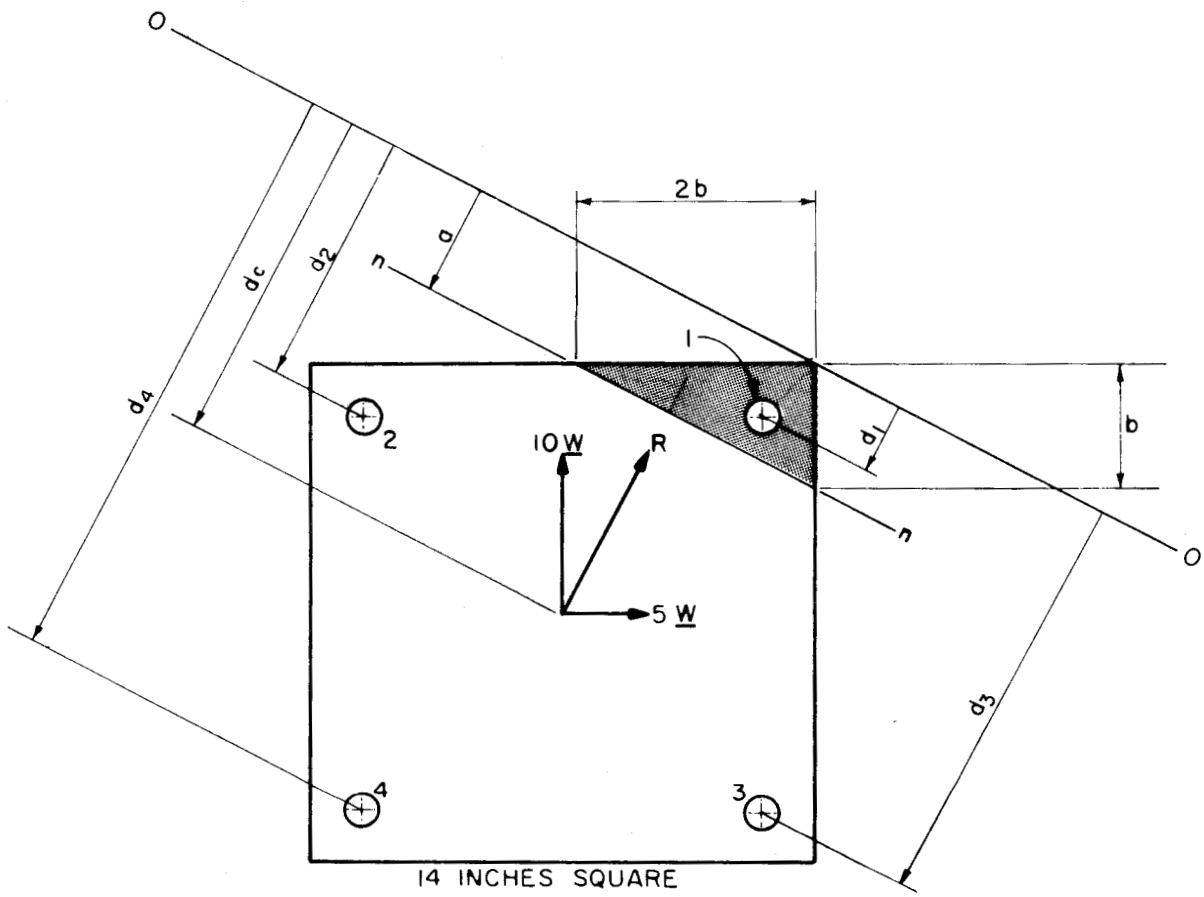


Fig. 3.8 Cask base plane.

Table 3.1. Distance of bolts from the X-X axis

(refer to Fig. 3.8 for definitions)

| Bolt | Distance to 0-0 axis |
|---|---|
| 1 | $7\sqrt{2}\cos(45° - 26.57°) - 5.75\sqrt{2}\cos(45° - 26.57°) = 1.6771$ in. |
| 2 | " $- 5.75\sqrt{2}\cos(26.57° + 45°) = 6.8200$ |
| 3 | " $- 5.75\sqrt{2}\cos(135° - 26.57°) = 11.9630$ |
| 4 | " $- 5.75\sqrt{2}\cos(26.57° + 135°) = 17.1059$ |

$d_c$ = the distance of the centroid of the bolt pattern from the x-x axis,

a = the distance of the neutral axis from the x-x axis,

b = the length of the short side of the triangular area.

From Fig. 3.8,

$$b = \frac{a}{\cos\ 26.57°} = \frac{\sqrt{5}a}{2} \tag{40}$$

Thus, from the force balance equation,

$$4A_b(d_c - a) = 1/3(5/4)a^3. \tag{41}$$

The single real root of this equation is

$$a = 3.1995 \text{ in.}$$

The neutral axis places one bolt in the compression region where it is ineffective. The moment of inertia of (a) the remaining three bolts and (b) the area of compression, is

$$I = A_b \sum_{i=2}^{4} (d_i - a)^2 + \frac{\sqrt{5}}{12} a^3 b \tag{42}$$

$$= 0.551 \text{ in.}^2 \sum_{i=2}^{4} (d_i - a)^2 + \frac{2.5}{12} a^4$$

$$= 178 \text{ in.}^4 \quad .$$

The $2\underline{W}$ vertical force can now be included in determining the stress in the extreme bolt. If the $2\underline{W}$ force is distributed uniformly over the four bolts, the bolt furthest from the neutral axis is the most stressed. This stress is

$$\sigma = \frac{2\underline{W}}{4A_b} + \frac{Mc}{I} \tag{43}$$

$$= \frac{2\underline{W}}{4(0.5510)} + \frac{11.2\underline{W}(10.75)(17.1059 - 3.1995)}{178} \quad .$$

$$= 13{,}900 \text{ psi.}$$

where

$c$ = the distance of the furthest bolt from the neutral axis,

$M = Rz_c$,

$R$ = horizontal static force, 11.2 $\underline{W}$,

$z_c$ = center of mass of the cask above its base plate, 10.75 in.,

If, in addition, the shear produced by the horizontal forces is uniform over all four bolts, the shear on the most stressed bolt is

$$\tau = \frac{11.2\underline{W}}{4A_b} = \frac{11.2(1350)}{4(0.5510)} \tag{44}$$

$$= 6800 \text{ psi.}$$

From Mohr's circle, the maximum shear stress in the critical bolt is

$$\tau_{MAX} = \left[\left(\frac{13900}{2}\right)^2 + (6800)^2\right]^{1/2} \tag{45}$$

$$= 9700 \text{ psi.}$$

Hence, any commercial grade steel bolt is acceptable.

### 3.5.2 *Tie-down of cask to vehicle*

Four individual wire ropes, each attached to the cask at a steel restraining strap, restrain the cask and tie it down to the truck bed. This set of four cables is considered to resist the three static load components alone.

Figure 3.7 shows a plan view of the cask and the restraining cables. A coordinate system is established with x and y axes on the truck bed and the z axis placed in a vertical direction through the center of the cask and shown on this drawing. A single force with Cartesian components of 10$\underline{W}$, 5$\underline{W}$, and 2$\underline{W}$ is applied at the center of mass of the cask and skid assembly. This force will produce a displacement with components u, v, w. The cask and skid are assumed to move rigidly without rotation. There is no significant pretension in the cables. The cables act only in tension and initially it is assumed that all four cables are active.

From the geometry of the cable system, the extensions produced in each cable can be written in terms of the cask displacement as follows:

$$e_1 = -\left[\frac{x - 7.875}{L}\right] u - \frac{y}{L} v + \frac{18.3125}{L} w \tag{46}$$

$$e_2 = \frac{x - 7.875}{L} u - \frac{y}{L} v + \frac{18.3125}{L} w \tag{47}$$

$$e_3 = \frac{x - 7.875}{L} u + \frac{y}{L} v + \frac{18.3125}{L} w \tag{48}$$

$$e_4 = -\left[\frac{x - 7.875}{L}\right] u + \frac{y}{L} v + \frac{18.3125}{L} w, \tag{49}$$

where

$L$ = the length of each cable, and

$$L = [(x - 7.875)^2 + y^2 + (18.3125)^2]^{1/2} \tag{50}$$

The subscripts in equations 46-49 refer to the cables identified in Fig. 3.7.

The total strain energy of the system is

$$U = \frac{AE}{2L}(e_1{}^2 + e_2{}^2 + e_3{}^2 + e_4{}^2), \tag{51}$$

where

A = the cross-sectional area of each cable (in.$^2$)

E = the elastic modulus of the cables (psi).

In addition to the applied force, there is a reaction with the truck bed. This reaction is conservatively assumed to be frictionless and consequently does no work during the assumed displacement. The total work done by all external forces is then

$$\underline{W}_T = 10\,\underline{W}u + 5\,\underline{W}v + 2\underline{W}w\,. \tag{52}$$

The total potential energy, V, of the system is

$$V = U - \underline{W}_T\,, \tag{53}$$

where

V and $\underline{W}_T$ are given by equations 51 and 52.

Total potential energy must be stationary at a point of equilibrium so

$$\frac{\delta V}{\delta u} = \frac{\delta V}{\delta v} = \frac{\delta V}{\delta w} = 0\,. \tag{54}$$

If we write

$$\frac{\delta V}{\delta u} = \frac{\delta V}{\delta e_1}\frac{\delta e_1}{\delta u} + \frac{\delta V}{\delta e_2}\frac{\delta e_2}{\delta u} + \frac{\delta V}{\delta e_3}\frac{\delta e_3}{\delta u} + \frac{\delta V}{\delta e_4}\frac{\delta e_4}{\delta u}\,, \tag{55}$$

and

$$\frac{\delta V}{\delta u} = \frac{AE}{2L}\left[2e_1\left(x - \frac{x-7.875}{L} + 2e_2\left(\frac{x-7.875}{L}\right)\right.\right. \tag{56}$$
$$\left. + 2e_3\left(\frac{x-7.875}{L}\right) + 2e_4\left(-\frac{x-7.875}{L}\right)\right] - 10\,\underline{W}$$

$$\frac{\delta V}{\delta v} = \frac{AE}{2L}\left[2e_1\left(\frac{-y}{L}\right) + 2e_2\left(\frac{-y}{L}\right)\right. \tag{57}$$
$$\left. + 2e_3\left(\frac{y}{L}\right) + 2e_4\left(\frac{y}{L}\right)\right] - 5\,\underline{W}$$

$$\frac{\delta V}{\delta w} = \frac{AE}{2L}\left[ 2e_1\left(\frac{18.3125}{L}\right) + 2e_2\left(\frac{18.3125}{L}\right) + 2e_3\left(\frac{18.3125}{L}\right) + 2e_4\left(\frac{18.3125}{L}\right)\right] - 2\,\underline{W}\,. \tag{58}$$

Substituting Eqs. 46-49 into Eqs. 56-58 reduces the number of unknowns to three and yields:

$$\frac{x-7.875}{L}\left[(+1+1+1+1)\frac{x-7.875}{L}u + (+1-1+1-1)\frac{y}{L}v + (-1+1+1-1)\frac{18.3125}{L}w\right] = \frac{10\,\underline{W}L}{AE} \tag{59}$$

$$\frac{y}{L}\left[(+1-1+1-1)\frac{x-7.875}{L}u + (+1+1+1+1)\frac{y}{L}v + (-1-1+1+1)\frac{18.3125}{L}w\right] = \frac{5\,\underline{W}L}{AE} \tag{60}$$

$$18.3125\left[(-1+1+1-1)\frac{x-7.875}{L}u + (-1-1+1+1)\frac{y}{L}v + (+1+1+1+1)\frac{18.3125}{L}w\right] = \frac{2\,\underline{W}L}{AE}\,. \tag{61}$$

Solving these three equations for the three displacement components gives:

$$u = \frac{10\,\underline{W}L}{AE}\,\frac{L^2}{4\,(x-7.875)^2} \tag{62}$$

$$v = \frac{5\,\underline{W}L}{AE}\,\frac{L^2}{4y^2} \tag{63}$$

$$w = \frac{2\,\underline{W}L}{AE}\,\frac{L^2}{4(18.3125)^2}\,. \tag{64}$$

Substituting Eqs. 62-64 into Eqs. 46-49 gives the following displacements in terms of attachment points x and y.

$$e_1 = \frac{\underline{W}L^2}{4AE}\left[-\frac{10}{x-7.875}-\frac{5}{y}+\frac{2}{18.3125}\right] \tag{65}$$

$$e_2 = \frac{\underline{W}L^2}{4AE}\left[\frac{10}{x-7.875}-\frac{5}{y}+\frac{2}{18.3125}\right] \tag{66}$$

$$e_3 = \frac{\underline{W}L^2}{4AE}\left[\frac{10}{x-7.875}+\frac{5}{y}+\frac{2}{18.3125}\right] \tag{67}$$

$$e_4 = \frac{\underline{W}L^2}{AE}\left[-\frac{10}{x-7.875}+\frac{5}{y}+\frac{2}{18.3125}\right] . \tag{68}$$

Since wire cables cannot compress, negative values of Eqs. 65-68 are not allowed. To investigate this restriction, it is assumed that the cables attach to the truck bed on lines that pass through the center line of the cask and from angles of 45° from the axis of the truck bed; hence, x = y.

By finding the roots of Eqs. 65-68, it was determined that only cables 2 and 3 are effective in restraining the $10\underline{W}$, $5\underline{W}$, and $2\underline{W}$ forces for all possible tie down points.

Tensions in cables 2 and 3 can be determined from static equilibrium. Since the sum of forces in the x-direction and y-direction must each vanish,

$$-\left(\frac{x-7.875}{L}\right)T_2 - \left(\frac{x-7.875}{L}\right)T_3 + 10\,\underline{W} = 0 \tag{69}$$

and

$$\frac{x}{L}T_2 - \frac{x}{L}T_3 + 5\,\underline{W} = 0 , \tag{70}$$

where $T_2$ and $T_3$ are the tensions in the cables.

Solving for $T_2$ and $T_3$, we obtain

$$T_2 = \frac{10\,\underline{W}\frac{x}{L} - 5\,\underline{W}\left(\frac{x-7.875}{L}\right)}{2\left(\frac{x-7.875}{L}\right)\left(\frac{x}{L}\right)} \tag{71}$$

$$T_3 = \frac{5\,\underline{W}\left(\frac{x-7.875}{L}\right) + 10\,\underline{W}\left(\frac{x}{L}\right)}{2\left(\frac{x-7.875}{L}\right)\left(\frac{x}{L}\right)} . \tag{72}$$

The distance x can range from near the edge of the skid (about 22 inches) to the edge of a truck bed (48 inches). The worst case (22 inches) yields

$$T_2 = 7.67\ \underline{W} = 7.67\ (1525\ \text{lb}) = 11{,}700\ \text{lb}. \tag{73}$$

$$T_3 = 14.9\ \underline{W} = 14.9\ (1525\ \text{lb}) = 22{,}700\ \text{lb}. \tag{74}$$

For this case, the force components on the tie-down strap to which cables 2 and 3 are attached are:

$$F_x = 10\ \underline{W} = -15{,}200 = -\left(\frac{x - 7.875}{L}\right) T_2 - \left(\frac{x - 7.875}{L}\right) T_3 \tag{75}$$

$$F_y = 5\ \underline{W} = -7{,}600 = \frac{x}{L} T_2 - \frac{x}{L} T_3 \tag{76}$$

$$F_z = -19{,}700 = -\frac{18.3125}{L} T_2 - \frac{18.3125}{L} T_3 . \tag{77}$$

The x and y components equal the components of the applied force while the z component was increased by the reaction with the truck bed.

The resultant load on the tie down end of the lifting fixture is:

$$R = [(15.2)^2 + (7.6)^2 + (19.7)^2]^{1/2} \tag{78}$$
$$= 26{,}000\ \text{lb}.$$

If this is resisted solely by the welds between the lower part of the strap and the cask, then the average shear stress across the root of the welds is

$$\bar{\tau} = \frac{26{,}000}{2.02}, \tag{79}$$
$$= 12{,}900\ \text{psi}.$$

(See Eq. 7 for the determination of the weld area).

This stress is below the allowable limit of 15,000 psi and the tie-down system meets requirements.

# 4. STANDARDS FOR TYPE B AND LARGE QUANTITY PACKAGING

The structural standards for large quantity packaging include load resistance of the packaging and the external pressure which the package must withstand. Compliance of the ORNL Shipping Cask D-38 with these requirements is discussed in the following subsections.

## 4.1 Load Resistance

When regarded as a simple beam supported at its ends along any major axis, the container must be capable of withstanding a static load normal to and uniformly distributed along its length that is equal to five times its fully loaded weight; it should not generate stress in any material of the cask in excess of the yield strength of that material.

The equivalent cross section of the cask analyzed in this study is illustrated in Fig. 4.1.

The maximum bending moment (M) is at $L/2$.

$$M_{max} = R_1 \frac{L}{2} - \frac{wL^2}{8} \quad , \tag{80}$$

$$= 3380\left(\frac{20}{2}\right) - \frac{338\,(20)^2}{8} \quad ,$$

$$= 16{,}900 \text{ in.} - \text{lb},$$

where

w = unit bending load in lb per linear in.

The moment of inertia, $I$, of the cross section,

$$I = \frac{\pi}{4}\,(r_0{}^4 - r_1{}^4) \quad , \tag{81}$$

$$= \frac{\pi}{4}\,(6.375^4 - 3.063^4) \quad ,$$

$$= 1228 \text{ in}^4.$$

The maximum bending stress, $S_B$, is

$$S_B = \frac{M_{r0}}{I} = \frac{16{,}900(6.375)}{1228} = 88 \text{ psi} \quad . \tag{82}$$

ORNL-DWG 75-5280R1

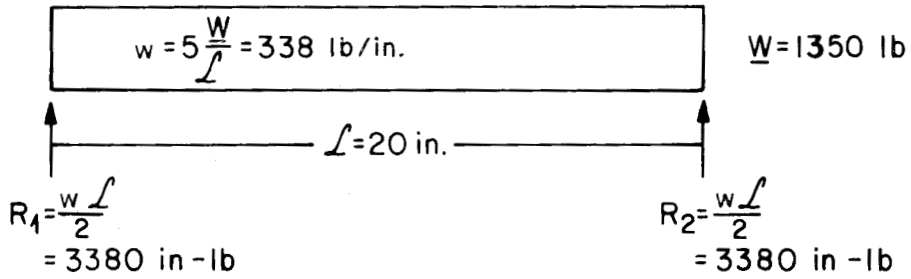


(a) CASK AS SIMPLE BEAM

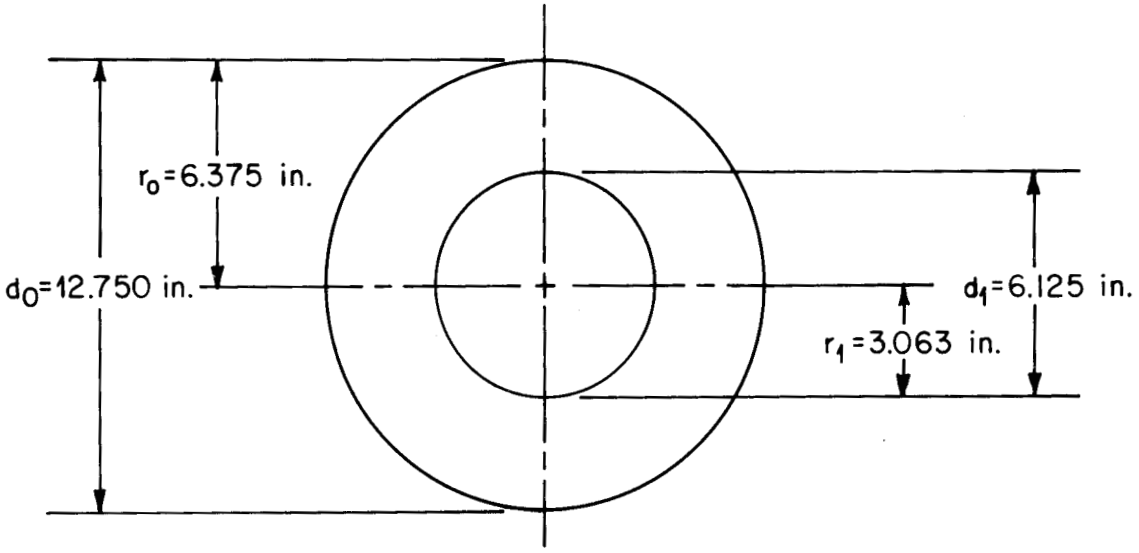


(b) EQUIVALENT CROSS SECTION OF CASK

Fig. 4.1 Analytical model to determine load resistance of ORNL Shipping Cask D-38.

The maximum horizontal shear, $S_s$, occurs at each end of the neutral axis.

$$S_S = \frac{4}{3}\frac{R_1}{\pi(r_0{}^2 - r_1{}^2)} = \frac{4}{3}\frac{3380}{\pi(6.375^2 - 3.063^2)} = 46 \text{ psi.} \tag{83}$$

The cask exceeds the requirements of the regulations from the standpoint of load resistance.

## 4.2 External Pressure

The regulations require that the design of the shipping package be adequate to ensure that the containment vessel will suffer no loss of contents if subjected to an external pressure of 25 psig.

The shell of the containment vessel is evaluated from the standpoint of withstanding external pressure with reference to Paragraph UG-28 of the ASME Boiler and Pressure Vessel Code,[15]

$$\frac{L}{d_0} = \frac{12}{4.75} = 2.52 \ , \tag{84}$$

$$\frac{d_0}{t} = \frac{4.75}{0.125} = 39.5 \ , \tag{85}$$

and the maximum allowable working pressure at 25°C

$$Pa = \frac{B}{\frac{d_0}{t}} = \frac{9500}{39.5} = 240.5 \text{ psig} \ . \tag{86}$$

where B = 9500 (from Fig. UNF-28.8 on p. 232 of Appendix V[15]). Since the maximum allowable working pressure on the shell of the containment vessel exceeds 25 psig, it is concluded that the cask exceeds the regulation requirements of the structural standards for external pressure.

External pressure would load the flat ends of the stainless steel cladding. The maximum thickness required for the end plates is calculated from the formula in Paragraph UG 34 of the ASME Boiler and Pressure Vessel Code,[15] since the minimum thickness of either end plate is 0.500 in., the external container structure and the massive uranium shields provide sufficient support to prohibit significant deflection of the flat ends due to external pressure.

Gaskets have been used at differential pressures significantly greater than 25 psig and have been found to satisfy the requirements. Hence, the regulations are met.

# 5. COMPLIANCE WITH STANDARDS FOR NORMAL CONDITIONS OF TRANSPORT

The regulations stipulate that a single package must be able to withstand the normal conditions of transport without substantially reducing the effectiveness of the package and without releasing radioactive material from the containment vessel. The contents of the container are limited so that the package will contain no gases or vapors that could reduce the effectiveness of the packaging. No circulating coolant other than atmospheric air is used, and no mechanical cooling device is required or provided. The ORNL Shipping Cask D-38 and its inner containers are designed so that the contents will not be vented to the atmosphere under normal conditions of transport. These normal conditions include the effects of heat, cold, pressure, free drop, and penetration.

## 5.1 Heat

The cask must be so designed and constructed that if it were subjected to direct sunlight at an ambient temperature of 130°F in still air, its effectiveness would not be reduced. In addition, the temperature of the accessible external surfaces of the cask shall not exceed 122°F in the shade when fully loaded, assuming still air at ambient temperatures. If the cask is transported in a vehicle assigned for the sole use of the consignor, the maximum accessible external surface temperature shall be 180°F.

### 5.1.1 *Heat transfer tests*

To evaluate the adequacy of the D-38 shipping cask under normal operating conditions, heat transfer tests were run on it, both in the sun and in the shade. The tests were performed in an asphalt-paved area at the Oak Ridge National Laboratory.

A test was run in which a heat source of 80W was suspended at the centerline of the internal cavity of the cask, turned on and left on for several days until a periodic heating (daytime) and cooling (nightime) cycle repeated itself. Temperatures were measured with chromel-alumel thermocouples (1) attached to the top surface of the cask, (2) located at the centerline of the internal cavity of the cask, and (3) placed in the ambient air about 3 feet from the external surface of the casks. The top surface of the cask was chosen as a temperature measuring point because its position relative to the sun was expected to produce the maximum external surface temperature on the cask. The highest temperatures recorded with the cask in the shade are given in Table 5.1.

The cask temperatures shown in Table 5.2 indicate the approximate maximum operating temperatures of the gaskets on the cask and on the 2R container inside the cavity, assuming a 130° ambient temperature. Since the maximum operating temperature of neoprene, the gasket material for the cask, is 300°F and the maximum operating temperature of silastic, the gasket material for the 2R inner container, is 450°F. The package will operate properly under normal temperature conditions required by the regulations.

Table 5.1. Cask temperatures determined in the shade

| Measurement location | Measured temperature (°F) | Extrapolated temperature (°F)[a] |
|---|---|---|
| Top of cask surface | 90 | 113 |
| Centerline inside cavity[b] | 142 | 165 |
| Ambient | 77 | 100 |

[a]Extrapolated to 100°F ambient temperature.
[b]Internal heat load was 80W.

Table 5.2. Cask temperatures determined in the sun

| Measurement location | Measured temperature (°F) | Extrapolated temperature (°F)[a] |
|---|---|---|
| Top of cask surface | 107 | 144 |
| Centerline inside cavity[b] | 156 | 193 |
| Ambient | 93 | 130 |

[a]Extrapolated to 130°F ambient temperature.
[b]Internal heat load was 80W.

## 5.2 Cold

The shipping package must be able to withstand an ambient temperature of -40°F in still air and shade.

If $T_1$ = -40°F (420°R), and assuming no internal heat load, the final or maximum pressure ($P_2$) in any cavity sealed at a pressure of 14.7 psia and a temperature of 70°F (530°R) is:

$$P_2 = \frac{P_1 T_2}{T_1} = 11.65 \text{ psig} \tag{87}$$

The resulting pressure differential is less than the 25-psig differential pressure investigated in Sect. 4.2. A temperature of -40°F is within the operating temperature range of the seals and the stainless steel cladding, structural components, and fasteners. Brittle fracture of these components under the stipulated cold condition is not likely because the temperatures of these components are above their ductile-to-brittle transition temperatures.

The preceding considerations indicate that the stipulated cold conditions will not reduce the effectiveness of the packaging, and that the container conforms to the requirements for the cold condition of normal transport.

## 5.3 Pressure

The regulations for normal conditions of transport specify that the package should be able to withstand an atmospheric pressure of 0.5 times the standard atmospheric pressure, with the resulting pressure being 7.35 psia.

When the model is under full heat load, trapped air in the cavity will expand and exert internal pressures. Assuming assembly at 70°F and 14.7 psia, the resulting pressure of any trapped air is:

$$P_2 = \frac{P_1 T_2}{P_1} = \frac{(14.7)(750)}{530} = 20.8 \text{ psia. } (13.4 \text{ psig}) \quad , \tag{88}$$

where

$P_1$ = assembly pressure, 14.7 psia,

$T_2$ = temperature under heat load, 750°R (290°F),

$T_1$ = assembly temperature, 530°R (70°F).

The cask and its gasketed seals will be able to withstand this pressure without damage or reduction in effectiveness of the packaging, and the container conforms to the requirement for the reduced pressure condition of normal transport, see Sect. 4.2.

## 5.4 Vibration

The container is of welded construction and, therefore, vibrations received in transit are not expected to affect the integrity of the cask. In addition, the cask, which was built several years ago, has operated in the transportation environment and has suffered no ill effects as a result of the vibrations that were encountered.

## 5.5 Water Spray

The containment capabilities of the ORNL Shipping Cask D-38 are not compromised by water spray, since all external surfaces are of stainless steel. The closure seal is impervious to water.

## 5.6 Free Drop

The regulations for normal conditions of transport require that a package weighing less than 10,000 lb shall be capable of withstanding a free drop through a distance of 4 ft onto a flat, essentially unyielding, horizontal surface, striking the surface in a position in which maximum damage is expected to result. A free drop of the ORNL Shipping Cask D-38 through a distance of 4 ft is expected to produce only minor denting of the outside steel shell. If the package were dropped flat on its top, repairable external damage would occur; however, the effectiveness of the package would not be reduced. (See the analysis of the 30-ft free fall, Sect. 6.1).

## 5.7 Penetration

The regulations for normal conditions of transport stipulate that the package must be capable of withstanding the impact of the hemispherical end of a vertical steel cylinder that weighs 13 lb, has a 1-1/4 in. diam, and is dropped from a height of 40 in. onto the exposed surface of the package that is expected to be the most vulnerable to puncture.

This condition would result in no more than a very superficial dent in the thinnest part (0.41 in. side wall) of the D-38 cask and would not reduce its effectiveness.

## 5.8 Compression

The package must be able to withstand the greater of two compressive loads equal to either five times the weight of the package or 2 lb/in.$^2$ multiplied by the maximum horizontal cross section of the package. The load shall be applied uniformly against the top and bottom of the package for 24 hr in the position in which the package would normally be transported.

The stress, $S_w$, is created in the steel shell by a weight imposed on the head of five times the weight of the package. This is determined:

$$S_w = \frac{5\underline{W}}{\pi dT} = \frac{5(1350)}{\pi(12)(0.38)} = 470 \text{ psia } (<15{,}000 \text{ psi}) \quad , \tag{89}$$

where

$\underline{W}$ = weight of fully loaded container, 1350 lb,

d = diameter of container, 12 in.,

T = thickness of container shell, 0.38 in.

The stress, $S_p$, created in the steel shell by a pressure of 2 psi on the head is determined:

$$S_p = \frac{2\pi d^2}{4\pi dT} = \frac{2\pi(12)^2}{4\pi(12)(0.38)} = 16 \text{ psi } (<15{,}000 \text{ psi}) \quad . \tag{90}$$

The stress developed in the shell by the imposed weight of five times the package weight of 470 psi was greater than the potential stress, and it did not exceed the strength of the shell of the container. No credit for the additional strength resulting from the uranium cask filling was taken.

## 6. COMPLIANCE WITH STANDARDS FOR HYPOTHETICAL ACCIDENT CONDITIONS

The standards for the hypothetical accident conditions stipulate that a container used for the shipment of fissile or large quantities of radioactive material shall be designed and constructed in such a manner and its contents limited so that, if it is subjected to the specified free drop, puncture, thermal, and water immersion conditions, the following conditions would be met:

1. The reduction in shielding would not be sufficient to increase the external radiation dose rate to more than 1000mR/hr at a distance of 3 ft from the outside surface of the package.
2. No radioactive material would be released from the package except for gases containing total radioactivity not to exceed 0.1% of the total radioactivity of the contents of the package.
3. The contents would remain subcritical.

## 6.1 Free Drop

The first in the sequence of hypothetical accident conditions to which the cask must be subjected is a free drop of 30 ft onto a flat, essentially unyielding, horizontal surface, striking the surface in a position in which the maximum damage is expected to occur.

Damage to the ORNL Shipping Cask D-38 was evaluated by assuming the cask struck the unyielding surface in one of three different orientations. These included impact on: (1) the top corner, (2) the top end, and (3) the side.

### 6.1.1 *Impact on top corner*

A computational analysis (see Appendix 11.3) was applied to a simplified cylindrical cask model to estimate the deformation resulting from a 30-ft corner drop (see Fig. 6.1) with its line of action through the center of gravity. Results shown in Table 6.1 indicate that by using specific energies for stainless steel that vary from 100,000 to 260,000 in.-lb/in.$^3$, the deformation would vary from 1.0 to 0.7 in.; this deformation would occur primarily in the steel because of the large bearing area between the steel and the uranium.

When the cask impacts on its top corner with its line of action through the center of gravity, the studs holding the inner cavity plug, the corner of the inner cavity plug flange, and the corner of the cask will all contact the unyielding surface at essentially the same instant, assuming that the steel shroud is neglected. Neglecting the strength of the steel shroud is justified because it is thin, will readily collapse, and is not designed to resist impact forces. As a result, the flange, and, therefore, the inner cavity closure plug will be jammed back into its cask cavity before motion of the plug relative to the cask body can impose a significant load on the studs in tension. In addition, the studs cannot be loaded in shear because of the small clearance that exists between the cask body cavity and the plug. Deformation of the corner of the cask is expected to displace the top steel plate of the cask to further lock the closure plug in place. Because of these combination of effects, the total deformation of the top corner of the cask is expected to be less than that shown in Table 6.1.

It is concluded that the inner cavity plug will remain in place if the cask were to drop on its top corner when the line of action is through the center of gravity.

### 6.1.2 *Impact on top end*

The effect of a 30-ft free fall onto the flat top of the cask was investigated to determine whether the cast uranium would fracture.

A computational model of the top end-impact orientation of the cask and idealized stress-strain curves for the two materials, stainless steel and uranium, that are involved are shown in Fig. 6.2. Equations are written for the idealized curves in the slope intercept form of a straight line.

ORNL Dwg 74-8017 R 2

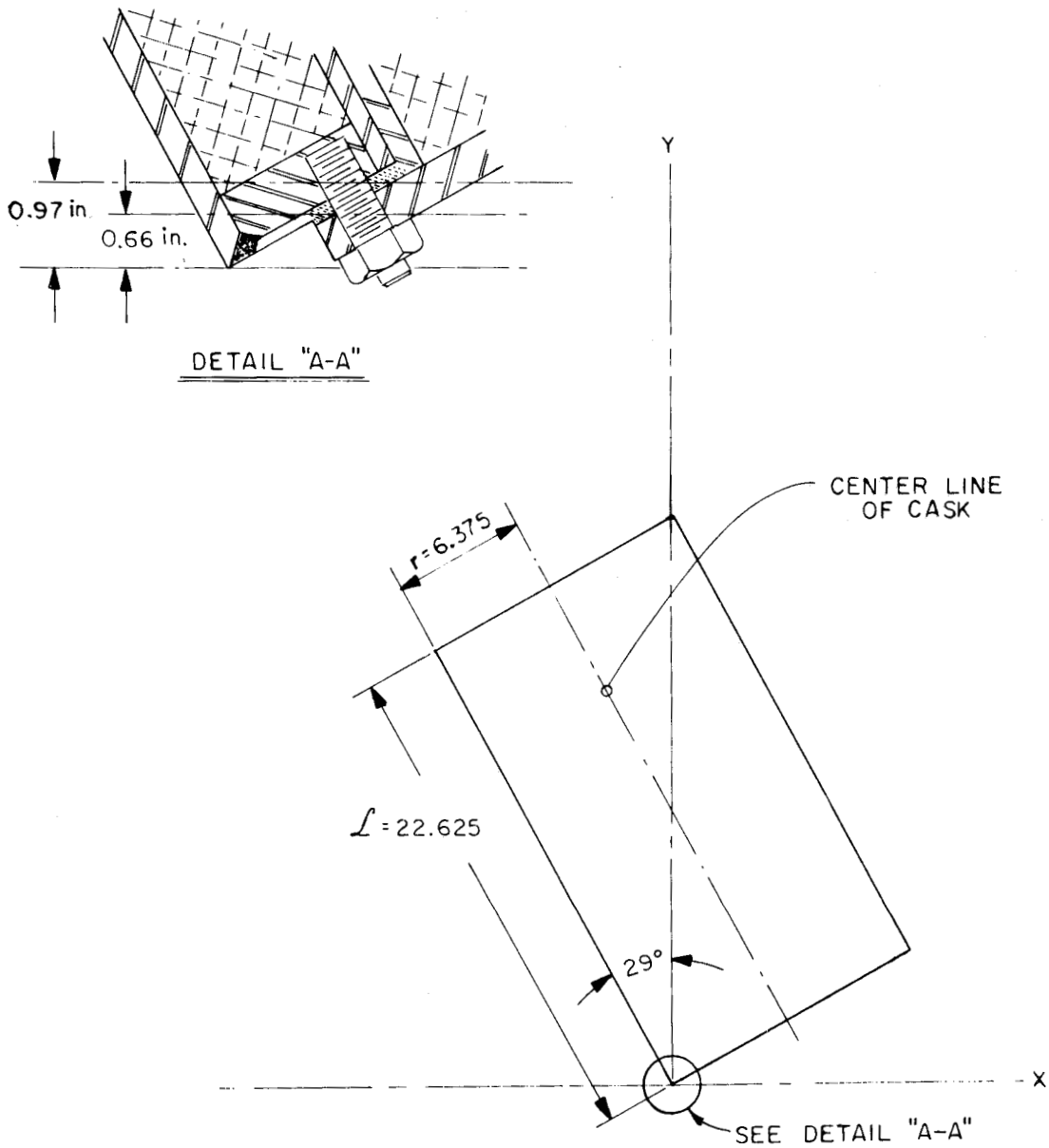


Fig. 6.1 Deformation geometry for corner impact orientation of cask.

Table 6.1. Impact on top corner - maximum acceleration and deformation resulting from high and low values of specific energy in stainless steel

| Specific energy[25] (in.-lb/in.$^3$) | Maximum deformation corner drop[a] (in.) | Residual shielding on corner[b] (in.) | Maximum negative acceleration (g) |
|---|---|---|---|
| 100,000 | 0.97 | 3.50 | 941 |
| 260,000 | 0.66 | 3.81 | 1380 |

[a]Measured along diagonal through center of gravity.

[b]Measured from corner to closest proximity to inner cavity; 4.47 in. before drop. This may be compared to a shielding distance of 3.31 in. at the side of the cask.

$$S = m\epsilon + S_0 \quad . \tag{91}$$

$$\epsilon = \frac{S - S_0}{m} \quad ,$$

where

$S_o$ = the S intercept (approximate yield stress) of the line, and

m = the slope of (S ultimate -$S_o$)/$\epsilon$ ultimate,

$\epsilon$ = strain.

For the stainless steel cladding or outer shell,

$$\epsilon = \frac{\dfrac{S - 40{,}000}{80{,}000 - 40{,}000}}{0.50} = 1.25 \times 10^{-5}\, S - 0.50 \quad . \tag{92}$$

For the uranium biological shielding,

$$\epsilon = \frac{\dfrac{S - 25{,}000}{90{,}000 - 25{,}000}}{0.13} = 2 \times 10^{-6}\, S - 0.05 \quad . \tag{93}$$

ORNL Dwg 68-9581 R2

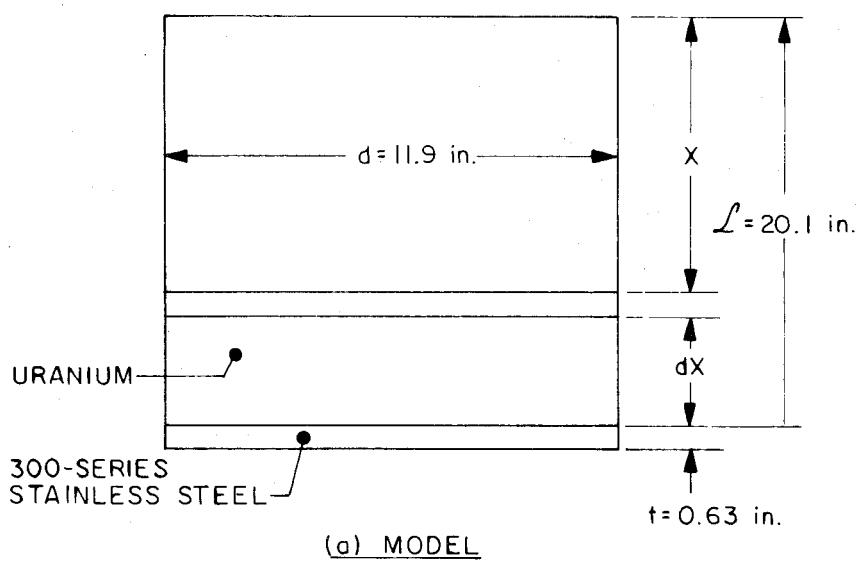


(a) MODEL

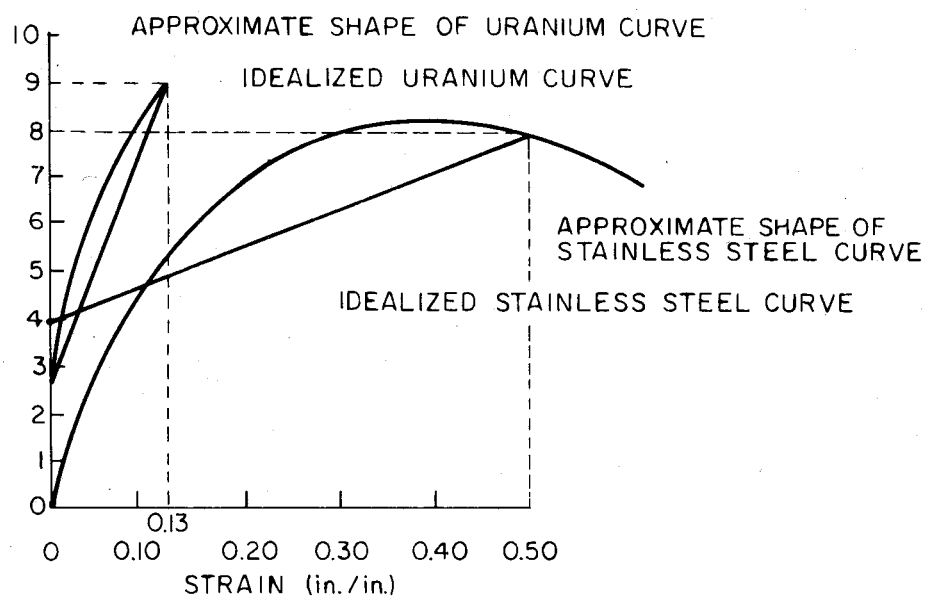


b STRESS-STRAIN CURVE

Fig. 6.2 Computational model of the top-end impact orientation of cask and idealized stress-strain curves for uranium and stainless steel.[23]

It was assumed that stress in the column of uranium varies only with time and position, or stated mathematically, S = f(TX). It was further assumed that the stress in the 0.63-in.-thick stainless-steel-bottom plate varies only with time; that is, the stainless steel was assumed to be weightless and S = f(T). With this assumption, the compressive stress in the stainless steel, $S_{sst}$, is equal to the stress in the uranium at X = $L$, the point of maximum stress, $S_m$, in the uranium. To simplify the mathematics without affecting the accuracy, the area, A, was assumed to be unity. The kinetic energy of the cask must be stored in the uranium body and the stainless-steel-top plate in the form of strain energy.

$$U = \tfrac{1}{2}MU^2 = \underline{W}h = A\rho Lh = \int F_U d\Delta_U + F_{sst}\Delta \tag{94}$$

$$= \int_{L=0}^{L=20.1} S_U\, A(\epsilon dx) + S_{sst}\, A(\epsilon t) \quad ,$$

where

$$S/X = S_m/L, \tag{95}$$

$$S = S_m X/L.$$

Substituting for S and $\epsilon$ and dropping A = 1 and t = 1, the strain energy

$$U = \int_{X=L=0}^{X=L=20.1} \left\{\frac{S_m X}{L}\left[\frac{2S_m X}{L}(10^{-6}) - 0.05\right]\right\} dX + S_m\,[1.25S_m\,(10^{-5}) - 0.50] \tag{96}$$

$$= \int_{X=L=0}^{X=L=20.1} \left[\frac{2S_m^2 X^2}{L^2}(10^{-6}) - 0.05\,\frac{S_m X}{L}\right] dX + 1.25S_m^2(10^{-5}) - 0.5S_m\,.$$

Integrating,

$$U = \left[\frac{2S_m^2 X^3}{3L^2}(10^{-6}) - \frac{0.05S_m X^2}{2L}\right]_{X=L=0}^{X=L=20.1} + 1.25S_m^{\,2}\,(10^{-5}) - 0.5S_m \quad . \tag{97}$$

Substituting values

$$1(20.1)(0.61)360 = \frac{2}{3}\,S_m^2\,(20.1)10^{-6} - \frac{0.05}{2}\,S_m(20.1) + 1.25 \times 10^{-5}\,S_m^2 - 0.5S_m. \tag{98}$$

Simplifying,

$$S_m^2 - (3.87 \times 10^4)S_m - 1.74 \times 10^8 = 0, \tag{99}$$

$$S_m = 42{,}800 \text{ psi.} \tag{100}$$

Since the maximum stress, $S_m$, is less than the ultimate stress for uranium (see Fig. 6.2) it is concluded that the uranium biological shield will not fracture as a result of the cask impacting on either of its flat ends nor will there be any damage to the shield that could be considered hazardous.

### 6.1.3 *Impact on side*

Impact on the side of the cask such that the edge of the skid and the top cover of the cask hit the unyielding surface simultaneously (Fig. 6.3) will allow most of the studs to be loaded in tension. The impact forces will be dissipated in bending the skid and deforming the steel corner of the cask. Neglecting the energy absorbed in bending and deforming the skid and assuming all energy is dissipated by deforming the stainless steel in the corner of the cask, a computer analysis was made (see Appendix 11.4) to determine the negative acceleration rates and resultant deformations. Results shown in Table 6.2 indicate that by using specific energies of stainless steel which vary from 100,000 to 260,000 in.-lb/in.$^3$ (see Table 2.1), the deformation would vary from 1.1 to 0.7 in.; from Detail A-A it can be seen that this deformation would occur principally in the steel, thus tending to confirm the original assumption.

It will be assumed that the larger calculated negative accelerations will act on the inner cavity plug. The following calculations demonstrate that the bolts are sufficiently strong to hold the plug.

Using the largest deceleration in Table 6.2 and applying it to the weight of the cask lid and contents, the force, $F_p$, on the eighteen 1/2-in. studs holding the shielding plug is determined as follows:

$$F_p = \underline{W}_s\, g = 200\,(1262) = 252{,}400 \text{ lb.} \tag{101}$$

where

$\underline{W}_s$ = weight of plug plus contents of inner cavity, 200 lb,

g = deceleration, 1262.

The force, $F_p$, is applied to the cask in the direction of the drop. The component, $F_B$, of that force applied along the axis of the bolts and the plugs is found as follows:

$$F_B = F_p \sin\theta = 252{,}000\,(0.457) = 115{,}000 \text{ lb}, \tag{102}$$

where

$\theta$ = angle between line of studs and impact surface, 27°.

Sixteen of the studs have an unengaged length of 1-3/8 in. and the other two have an unengaged length of 5/8 in. Each of the 16 long studs has a 3/4-in. washer that has a cross-sectional area of 0.142 in.$^2$, [17] which is the same area as that of the stud. From an energy

ORNL Dwg. 75-801

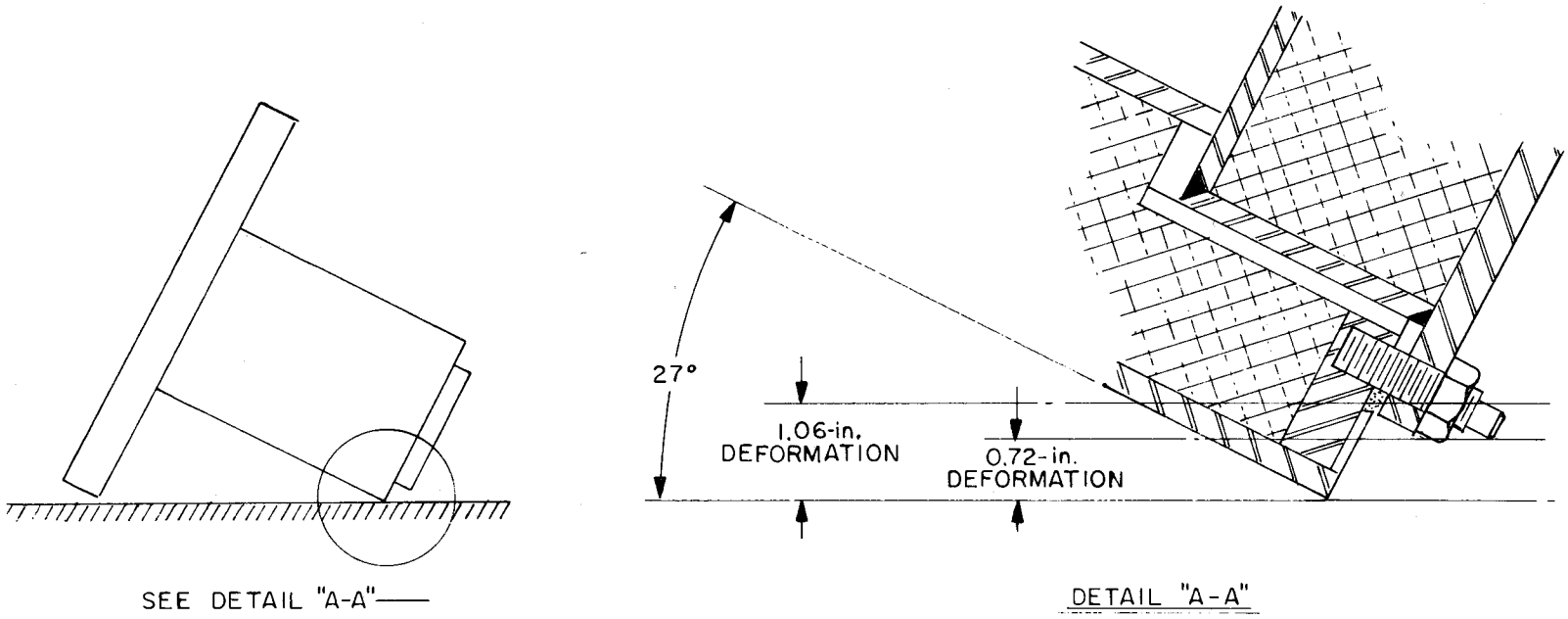


Fig. 6.3 Deformation geometry for side impact orientation of cask.

Table 6.2. Impact on side - maximum acceleration and deformation resulting from high and low values of specific energy in stainless steel

| Specific energy (in.-lb/min.$^3$) | Maximum deformation side drop (in.) | Residual shielding on corner[a] (in.) | Maximum negative acceleration (g) |
|---|---|---|---|
| 100,000 | 1.06 | 3.37 | 852 |
| 260,000 | 0.72 | 3.72 | 1262 |

[a]Measured from corner to closest proximity to inner cavity, 4.47 in. before drop. This may be compared to a shielding distance of 3.31 in. at the side of the cask.

storage standpoint, this additional area increases the effective length of the long studs to 2-1/8 in. The studs are made from annealed 4140-series steel that has the idealized stress-strain curve shown in Fig. 6.4.[18] It is assumed that the two short studs will fail in tension.

The force, $F_s$, that is required in the short studs to cause failure is found:

$$F_s = 2(Su)A = 2(90,00)(0.142) = 25,600 \text{ lb.} \tag{103}$$

The elongation, $\Delta$, of the short studs at failure is found:

$$\Delta = \epsilon L = 0.27(0.625) = 0.169 \text{ in.} \tag{104}$$

At that time the long studs have elongated by the same length and the strain is determined by

$$\epsilon = \frac{\Delta}{L} = \frac{0.169}{2.125} = 0.080 \text{ in./in.} \tag{105}$$

The idealized curve of the slope intercept form for the 4140 steel is

ORNL Dwg 68-9580

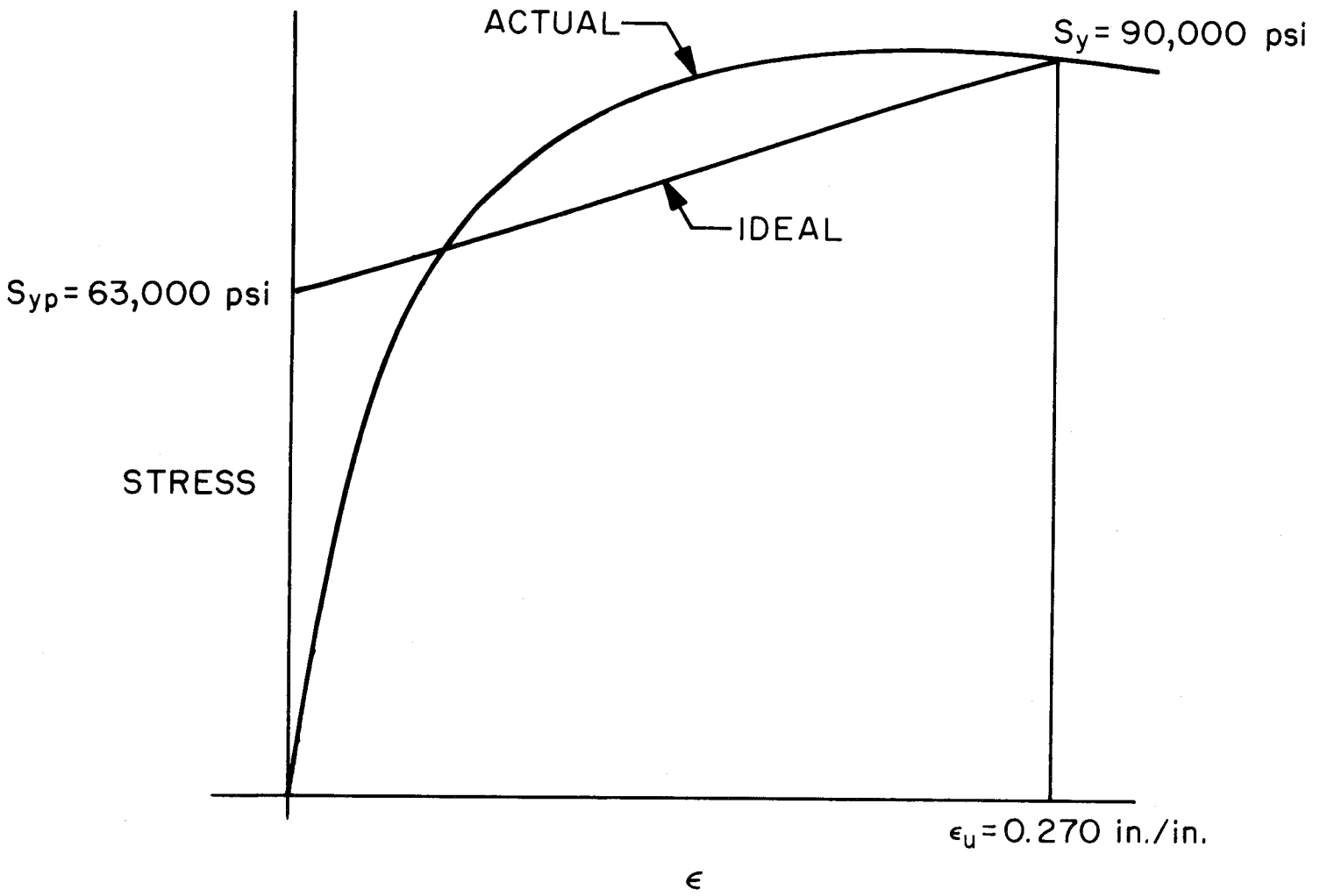


Fig. 6.4 Stress-strain curve for annealed 4140-series steel.

$$S = m\epsilon + Syp. \tag{106}$$

$$= \frac{90{,}000 - 63{,}000}{0.27}\ \epsilon + 63{,}000\ ,$$

$$= 100{,}000\,\epsilon + 63{,}000\ .$$

The stress in the remaining long studs is

$$S = 100{,}000\,(0.08) + 63{,}000 = 71{,}000 \text{ psi.} \tag{107}$$

The force, $F_L$, which the long studs will resist without further elongation is found

$$F_L = 16\,(71{,}000)(0.142) = 161{,}300 \text{ lb}, \tag{108}$$

$$F_L + F_S = 161{,}300 + 25{,}600 = 186{,}900 \text{ lb } (>115{,}000 \text{ lb})\ . \tag{109}$$

Since the sum of the force required to break the two short studs plus the force which can be carried by the long studs is less than the force applied to the studs [see Eq. (65).], it is concluded that the inner cavity plug will remain fastened to the cask in the side drop.

## 6.2 Puncture

The second in the sequence of hypothetical accident conditions to which the cask must be subjected is a free drop of 40 in. to strike, in a position in which maximum damage is expected, the top end of a vertical mild steel bar mounted on an essentially unyielding horizontal surface. The mild steel bar shall have a diameter of 6 in., with the top horizontal and its edge rounded to a radius of not more than 1/4 in.; the bar shall be of such length that it will cause maximum damage to the cask, but not less than 8-in. long. The long axis of this bar shall be normal to the surface of the cask upon impact.

To analyze the puncture accident, a rather conservative model can be used that assumes all the energy absorbed by the cask is absorbed by the outer stainless steel shell with no consideration being given to the uranium shielding.

The energy of impact will be absorbed by the 0.41-in.-thick cask stainless steel outer shell. Figure 6.5 illustrates the configuration for this computational model. The absorbed energy, U, is found:

$$U = \underline{W}h = 1525\,(40) = 61{,}000 \text{ in.-lb.} \tag{110}$$

where

$\underline{W}$ = weight of cask, 1525 lb,

h = drop height, 40 in.

ORNL Dwg 74-12656 R 2

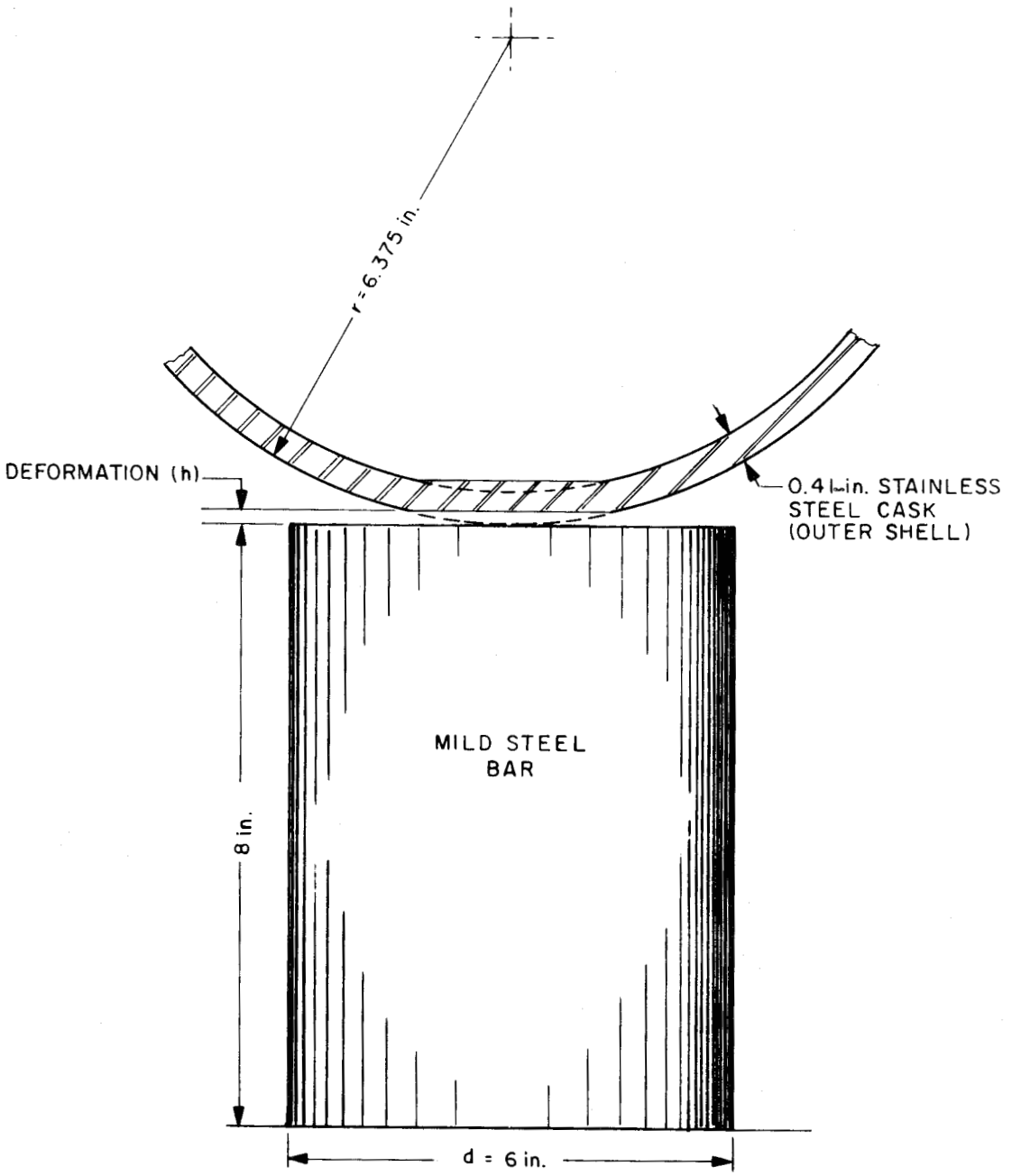


Fig. 6.5 Model used for puncture analysis.

The maximum energy imparted to the cask is 61,000 in.-lb. Conservatively, 100,000 in.-lb is required to deform 1 in.$^3$ of stainless steel (see Table 2.1); therefore, the energy of impact would deform about 0.61 in.$^3$ of material. When the cask strikes the bar, the depth of penetration of the stainless steel shell would not exceed the depth of a sector having a volume of 0.61 in.$^3$ The area, A, of the displaced segment of the stainless steel shell is given by:

$$A = \frac{V}{d} = \frac{0.61}{6} = 0.102 \text{ in.}^2, \tag{111}$$

where

d = diameter of bar, 6 in.

The height of the displaced segment of the stainless steel may be found by solving the following equation for h.

$$A = r^2 \cos^{-1}\left(\frac{r-h}{r}\right) - (r-h)(2+h-h^2)^{1/2}, \tag{112}$$

where

h = height of segment (or depth of penetration), in.,

$r$ = radius of cylinder, 6.375 in.

The depth of penetration is found to be 0.019 in. Damage of this magnitude would not reduce the effectiveness of the cask.

## 6.3 Thermal Evaluation

### 6.3.1 *Hypothetical thermal accident condition discussion*

The third in the sequence of hypothetical accident conditions specified by the regulations to which the cask must be subjected is exposure for 30 min within a source of radiant heat having a temperature of 1475°F and an emissivity coefficient of 0.9, or equivalent. For calculational purposes, it shall be assumed that the package has an absorption coefficient of 0.8. The package shall not be cooled artificially until after the 30-min test period and the temperature at the center of the package has begun to fall, or until 3 hr following the test period.

A modified version of the computer program, HEATING-3,[19] was used to determine the temperature distribution of the cask when it is exposed to these thermal environments. The computational model representing the ORNL Shipping Cask D-38 is illustrated in Fig. 6.6.

It was assumed that the container was loaded with the maximum permissible decay heat load of 80 W and that natural convection was a singnificant mode of heat transfer in the large interior air gaps. Natural convection was neglected in the small internal gaps, leaving radiation and conduction as the only modes of heat transfer across them. The temperature distribution, based on a 100°F ambient condition, was used as input for the starting temperatures in the hypothetical thermal accident (fire) calculation.

The damage from the free drop and puncture portions of the hypothetical accident would not adversely affect the performance of the container in the hypothetical thermal accident. Hence, the undamaged configuration was assumed. The shroud, which would help reduce heat input to the cask in a fire (see Figs. 1.1 and 1.2), was neglected.

### 6.3.2 *Thermal properties of materials*

The thermal properties of materials used to compute the temperature distribution under steady state and transient conditions are listed in Table 6.3.

### 6.3.3 *Thermal accident analysis*

Cask temperatures were followed for 3 hr after the conclusion of the fire; no artificial cooling was assumed.

The stainless steel uranium-shielded cask is an excellent conductor of heat with few air gaps to act as insulation. The cask heats and cools quickly. The neoprene gaskets on the closure plug and the O-rings (maximum temperature 350°) on the inner-cavity drain plug will be destroyed in the hypothetical thermal accident.[20] The temperature of the inner container (see Fig. 6.7) reaches a maximum of 741°F at 96 min after the start of the test, or 66 min after the end of the "fire."

At that temperature, the seal of the 2R container may be damaged. However, since all radioactive material is contained in capsules that are sealed by welding, brazing, or swagging inside the inner container, there will be no release of activity to the cavity or to the environment. Consequently, the cask meets this part of the regulations.

## 6.4 Water Immersion

The fourth in the sequence of hypothetical accident conditions to which the cask must be subjected is immersion in water in such a manner that all portions of the package are under at least 3 ft of water for a period of not less than 8 hr.

It is assumed that all rubber gaskets will be destroyed in the fire. However, since the solid radioactive material is contained in sealed capsules whose integrity has remained intact throughout the accident sequence, no material will be lost. In addition, the moderation afforded by the water (see Sect. 7) is not detrimental. Therefore the cask will meet the water immersion requirements.

ORNL DWG 74-10901 R1

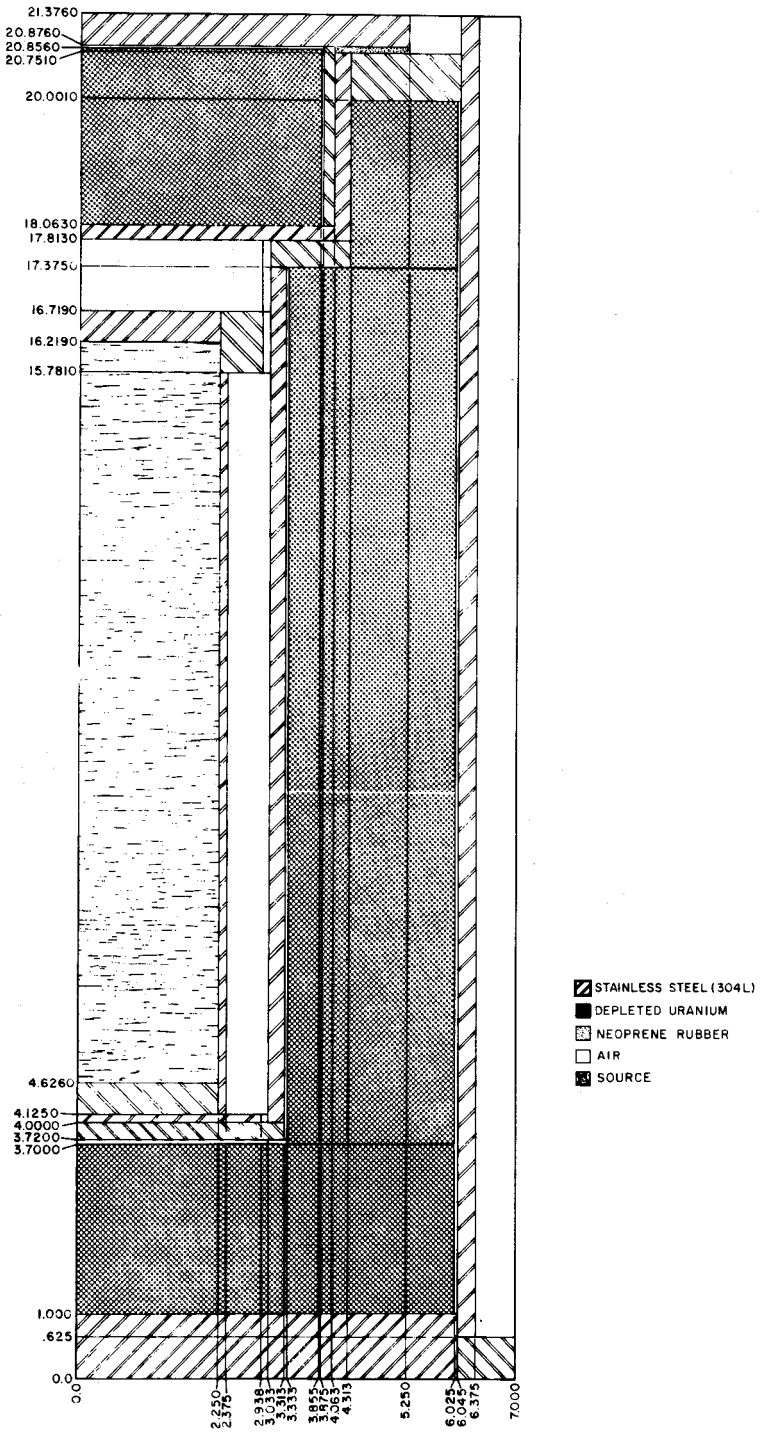


Fig. 6.6 Computational model to determine the effect of thermal tests on the ORNL Shipping Cask D-38.

Table 6.3. Thermal properties of materials of construction

| Material | Temperature (°F)[a] | Thermal conductivity [Btu $hr^{-1}$ $ft^{-1}$ $(°F)^{-1}$] | Density (lb $in.^{-3}$) | Heat capacity [Btu $lb^{-1}$ $(°F)^{-1}$] |
|---|---|---|---|---|
| SS-304 | NTD | 9.4 | 0.29 | 0.12 |
| Uranium | NTD | 19.0 | 0.683 | 0.028 |
| Neoprene | NTD | 0.11 | 0.05 | 0.471 |
| Air[b] | 0.0 | 0.013 | $4.97 \times 10^{-5}$ | 0.239 |
| | 200.0 | 0.017 | $3.47 \times 10^{-5}$ | |
| | 400.0 | 0.021 | $2.66 \times 10^{-5}$ | |
| | 600.0 | 0.025 | $2.16 \times 10^{-5}$ | |
| | 800.0 | 0.029 | $8.17 \times 10^{-6}$ | 0.256 |
| Source | NTD | 31.8 | 0.0361 | 1.0 |

[a]Temperatures denoted as NTD indicate nontemperature dependent constants.

[b]Air fills the large voids in the cavity, and its values are used as a substitute for helium in the internal gaps.

ORNL DWG 74-11705

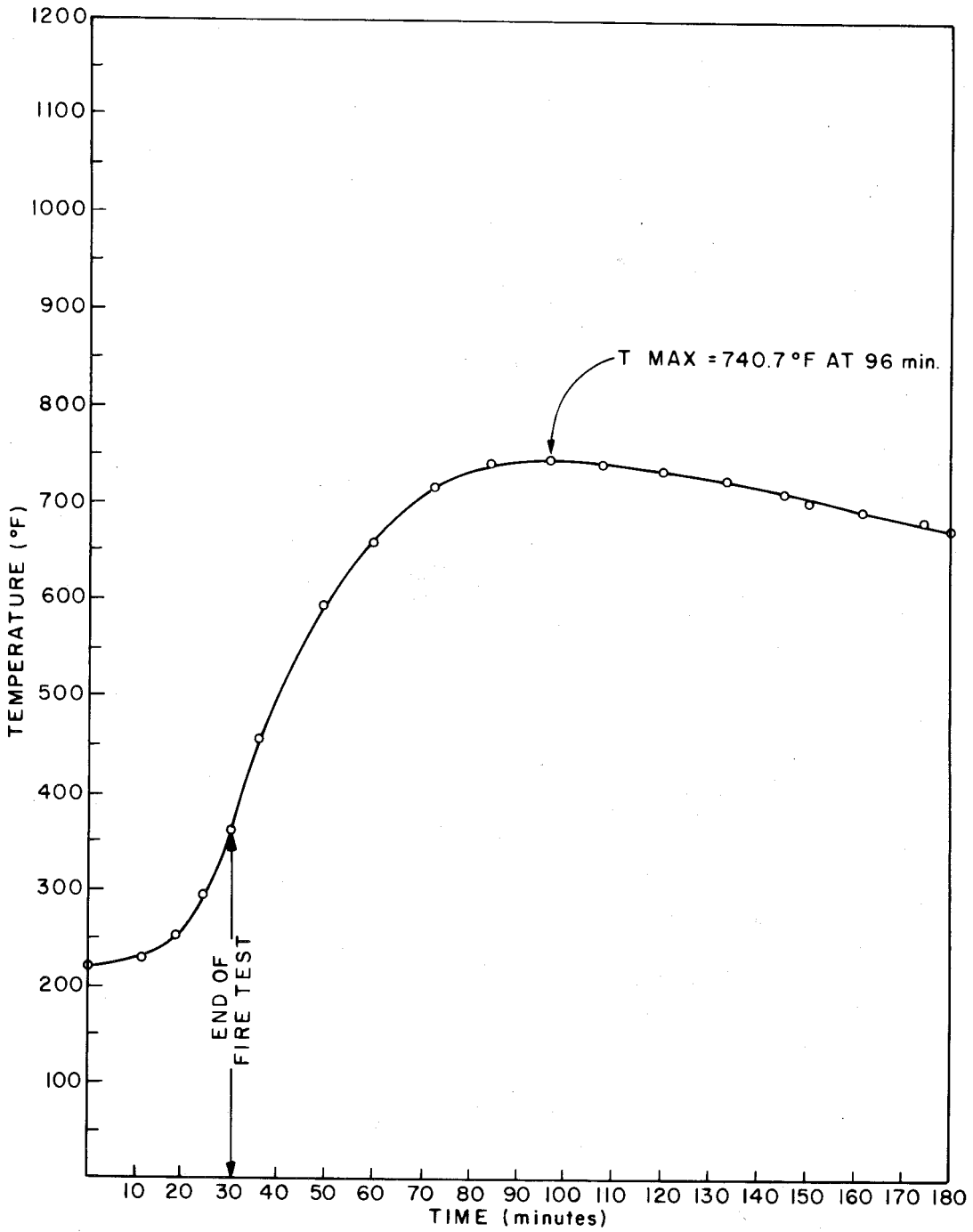


Fig. 6.7 Time vs temperature plot for inner-container seals as determined by HEATING-3 analysis of ORNL Shipping Cask D-38.

# 7. CONTAINMENT

The regulations[2,4] require that packages in which fissile or large quantities of radioactive materials are shipped must maintain containment of radioactive contents under the stipulated normal and accident conditions of transport. The containment boundaries and capabilities of the ORNL D-38 cask are discussed in this section.

## 7.1 Containment Boundaries

The containment boundaries for the shipping options available with the ORNL D-38 cask are (a) the cask cavity sealed by its gaskets, (b) the Spec. 2R container sealed by its gasket, and finally (c) the metal capsules containing the solid radioactive material, sealed by welding, brazing, or swagging. In the case of plutonium, there will be two welded or brazed seals between the source and cask cavity. This latter line of containment is considered the primary barrier.

## 7.2 Requirements for Normal Conditions of Transport

The sealed metal capsules contained inside the Specification 2R containers will withstand temperatures and pressures in excess of those encountered during normal trnsport. Thus, no release of radioactive material and no loss or contamination of coolant will result from exposure of these containers to the normal conditions of transport. The test sequence for special form materials is more severe than the normal conditions of transport, and no release of radioactive materials is expected to result from exposure of those containment vessels to the normal conditions of transport. Any pressure increases will be less than those experienced in the accident sequence, and consequently there will be no loss or contamination of coolant (air).

Exposure of the ORNL D-38 cask to the normal conditions of transport will not result in a loss of secondary containment and the temperatures encountered will be within the operating limits of the materials forming the boundary of the secondary containment.

## 7.3 Containment Requirement During the Hypothetical Accident

It has been concluded that secondary containment will be lost as a result of exposure of the ORNL D-38 cask to the hypothetical accident conditions. The free-drop condition of the hypothetical accident would result in failure of mechanical seals and possibly in the rupture of welds in the secondary containment. Exposure of the cask to the thermal condition of the hypothetical accident would result in decomposition of closure gaskets. Despite the loss of secondary containment, it has been concluded that primary containment of radioactive materials will be maintained during and after exposure of the cask to the hypothetical accident conditions.

## 7.4 2R Container Design[21]

Typical inner 2R containers used at ORNL for shipment of solid radioactive material are illustrated in Figs. 7.1 through 7.4. The materials of construction and bolting for these containers are limited to austenitic stainless steels or other materials which maintain their ductility at temperatures as low as -40°F. These materials are purchased in accordance with ASME or ASTM specifications. The design temperature for the 2R container is taken as 193°F, which is the maximum temperature computed for the inner container under normal conditions of transport. When it is assumed that the 2R container and contents are assembled at an ambient temperature of 70°F and air pressure of 14.7 psia, a temperature of 193°F will produce a pressure inside the container of

$$P_2 = P_1T_2/T_1 = [14.7(193 + 460)]/(70 + 460) = 18 \text{ psia.} \tag{113}$$

When it is assumed that the least external pressure experienced by the contaier will be 0.5 times the standard atmospheric pressure, the greatest gauge pressure experienced will be 18 - 7.35 = 10.8 psig. The design pressure for the 2R container was therefore established conservatively as 20 psig. The design stress is 10,300 psi, which is the minimum listed in Sect. VIII[16] tables for a temperature of 500°F.

The 2R containers used in the D-38 cask will have the minimum head and wall thicknesses given in Table 7.1. These dimensions are based on the requirements of Specification 2R[22] and Sect. VIII of the ASME Boiler and Pressure Vessel Code. The equations used to determine these thicknesses are the applicable equations for sizing pressure vessel shells and heads given in Sect. VIII of the ASME code. The applicable equation for determining the shell thickness if Eq. (1) in paragraph UG 27:

$$t = \frac{Pr}{SE} - 0.6P, \tag{114}$$

where

$t$ = wall thickness (in.),

$r$ = radius of container (in.),

$S$ = allowable stress = 10,300 psi,

$E$ = joint efficiency = 1 for 2R containers.

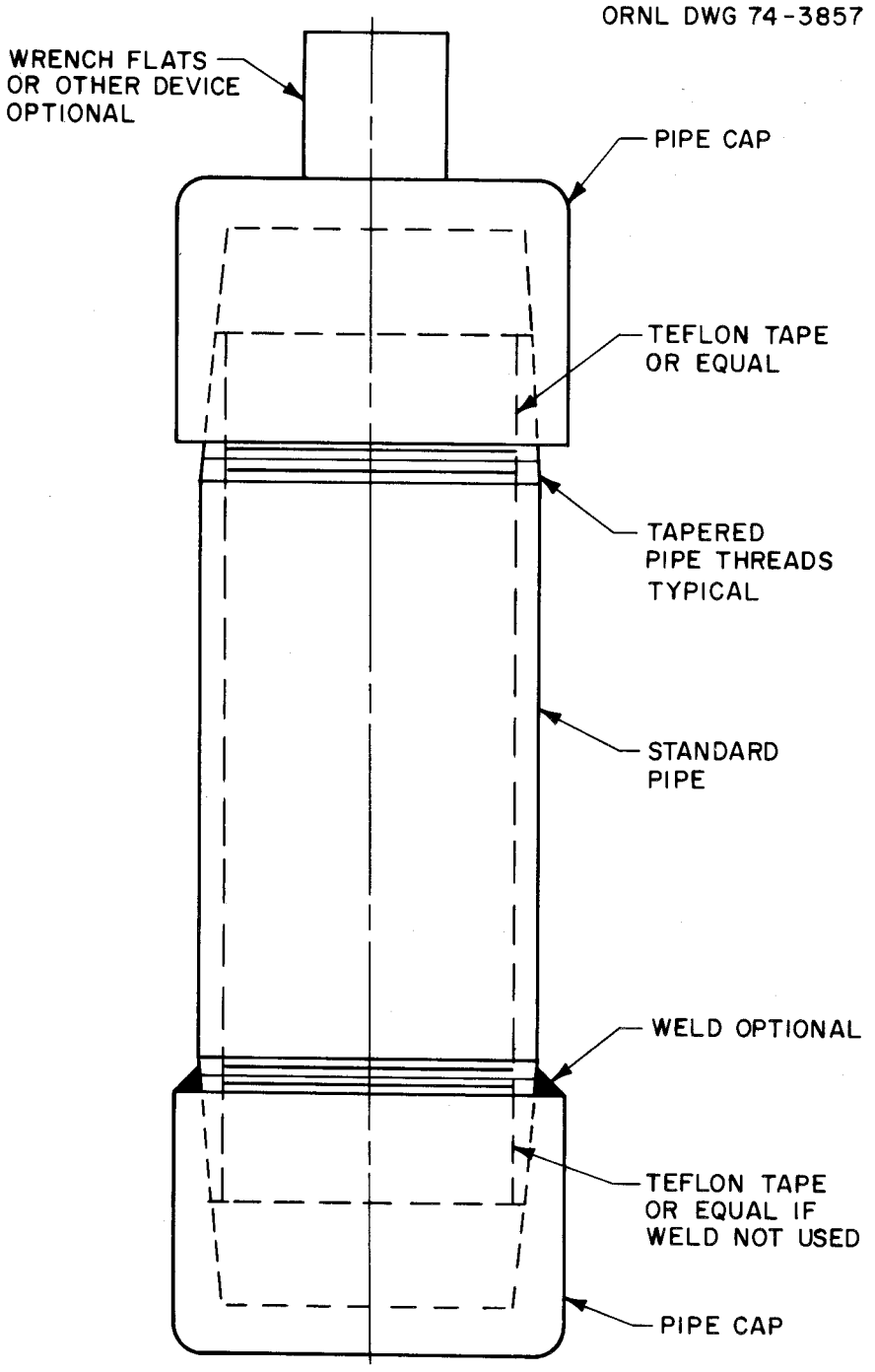


Fig. 7.1 Pipe element 2R container.

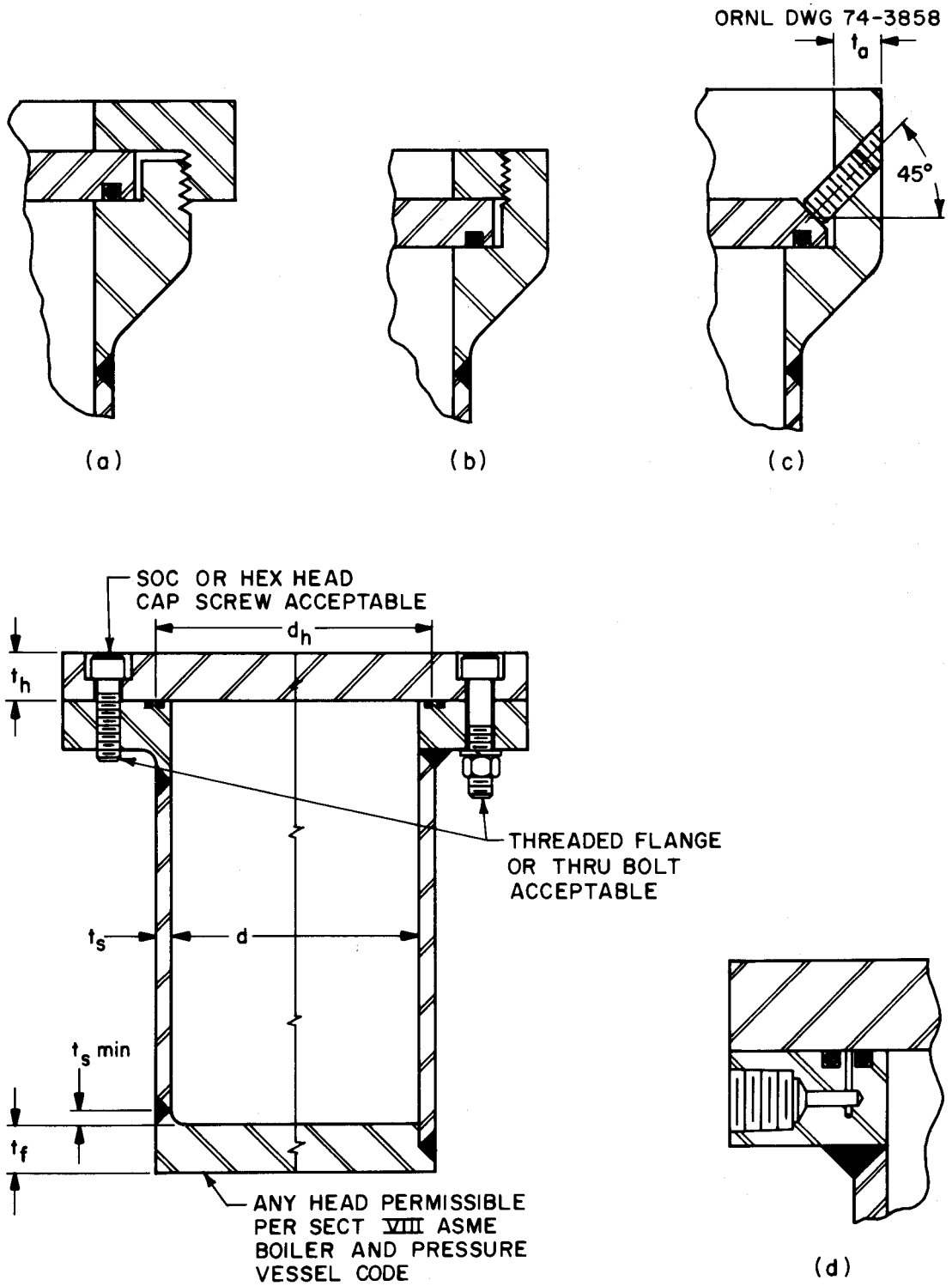


Fig. 7.2 Details of typical flanged 2R container.

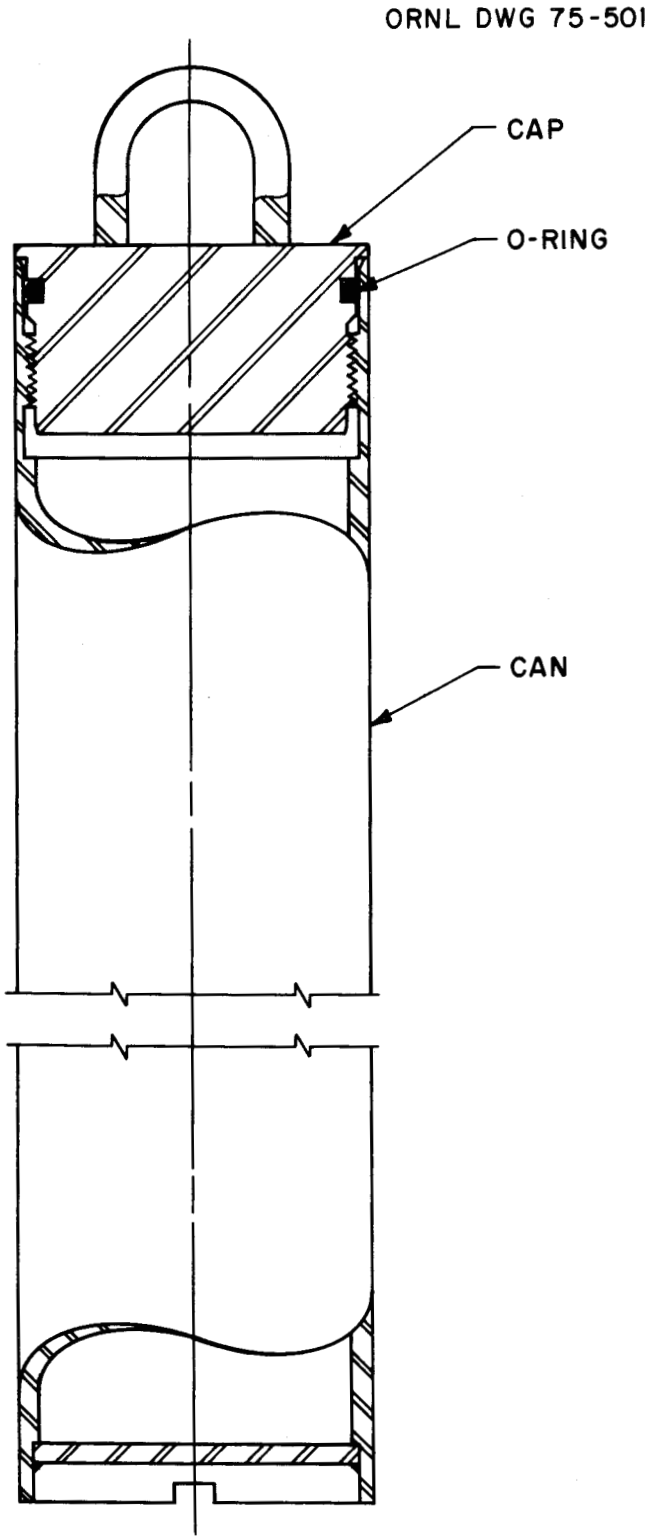


Fig. 7.3 Typical threaded 2R container.

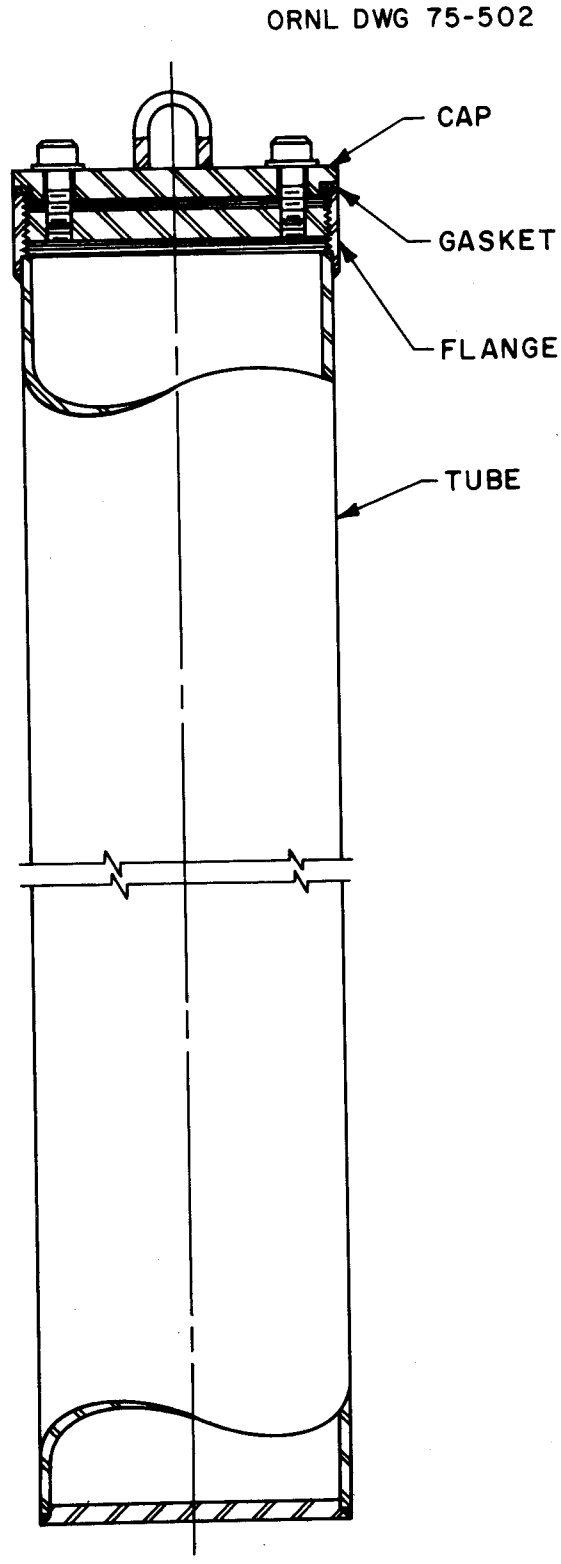


Fig. 7.4 Typical bolted 2R container.

Table 7.1. Dimension schedule for Specification 2R containers

| | Dimensions (in.) for symbols shown in Fig. 7.2 | | | | Bolt | |
|---|---|---|---|---|---|---|
| d | $t_s$ | $t_f$ | $t_h$ | $t_a$ | No. | Size |
| 2 | 3/32 | 3/16 | 3/16 | 3/8 | 4 | 1/4-20 |
| 3 | 1/8 | 1/4 | 1/4 | 3/8 | 6 | 1/4-20 |
| 4 | 1/8 | 1/4 | 1/4 | 3/8 | 6 | 1/4-20 |
| 5 | 1/8 | 1/4 | 1/4 | 3/8 | 6 | 5/16-18 |
| 5 3/4 | 1/8 | 3/8 | 1/4 | 3/8 | 6 | 5/16-18 |

The applicable equation for determining the thickness of the top and bottom heads is Eq. (1) in paragraph UG 34:

$$t = d\left(\frac{CP}{S}\right)^{1/2}, \tag{115}$$

where

d = diameter of head (in.),

C = factor dependent upon method of attachment used for head.

The stress in the bolts of bolted 2R containers resulting from internal pressure is given by the equation

$$\sigma_t = (pA)/(nA_S) = (p\pi d^2)/(4nA_S), \tag{116}$$

where

p = internal gauge pressure (psi),

A = area of container lid exposed to internal pressure (in.$^2$),

n = number of bolts,

$A_S$ = stress area of one bolt (in.$^2$),

d = diameter of container lid (in.).

The greatest stress on the 5/16-18 bolts (Table 7.1) will occur for the greatest value of $d^2/nA_S$. As indicated in Table 7.1, this will be when the diameter of the container lid is 5.75 in., the number of bolts is six, and the stress area of one 5/16-18 bolt is 0.0524 in.$^2$.[17] The resulting stress is

$$\sigma_t = 20\pi(5.75)^2/4(6)(0.0524) = 1652 \text{ psi}. \tag{117}$$

The Specification 2R containers shipped in the ORNL D-38 cask are fabricated in accordance with ORNL Quality Assurance Procedures. Applicable approved ORNL procedures are used for welding, and all welds are inspected in accordance with approved ORNL weld inspection procedures. The bolting for the Specificaton 2R container is increased beyond that required for pressure tightness under the hypothetical accident conditions. Some dimensions of these containers are increased beyond the calculated values or those required by Specification 2R to facilitate fabrications. Silicone rubber gaskets or metallic gaskets made from metals with melting points higher than 800°F are used in 2R containers shipped in the ORNL D-38 cask.

# 8. CRITICALITY

The analysis for the single cask given below is adequate for an infinite array of similar containers.

## 8.1 Evaluation of a Single Package

A criticality analysis has been made (see Nuclear Safety Review 758 in Appendix 11.2).

Since the quantity of fissile isotopes carried is below all minimum critical masses for these isotopes under optimum moderation and reflection; since the cask effectively isolates the contents from neutron interaction with packages of similar design, unlimited numbers could be stacked with no criticality problem occurring. Thus, the package is adequate for Fissile Class I Shipments.

# 9. SHIELDING EVALUATION

## 9.1 Discussion and Results

The cavity in the ORNL Shipping Cask D-38 is surrounded by a 0.28-in.-thick stainless steel inner shell and a 0.41-in.-thick outer stainless steel shell. The shielding cavity between the two is filled with depleted uranium that is 2-3/4-in. thick. In addition, the cask contents are limited to a source of the DOT regulations.[5] Actual measurements made with a 20 ci $^{60}Co$ source in the cask gave a reading of approximately 20 mrem/hr at the outer surface.

The shielding effectiveness will not be reduced by the conditions of normal transport or by the hypothetical accident.

# 10. QUALITY ASSURANCE

## 10.1 Fabrication, Inspection, and Acceptance Tests

The D-38 container was built prior to the adoption of a formal quality assurance program by the DOE and ORNL. A formal quality assurance program has now been prepared (ORNL/TM-6471), and future shipping containers will be constructed in accordance with the provisions set forth in this program.

# 11. APPENDICES

## 11.1. Appendix A: Drawings

Page

ORNL Shipping Cask D-38 Assembly and Details 75
M-12133-CD-126-E

Other Associated Drawings

ORNL Shipping Cask D-38 77
M-12166-CD-022-D

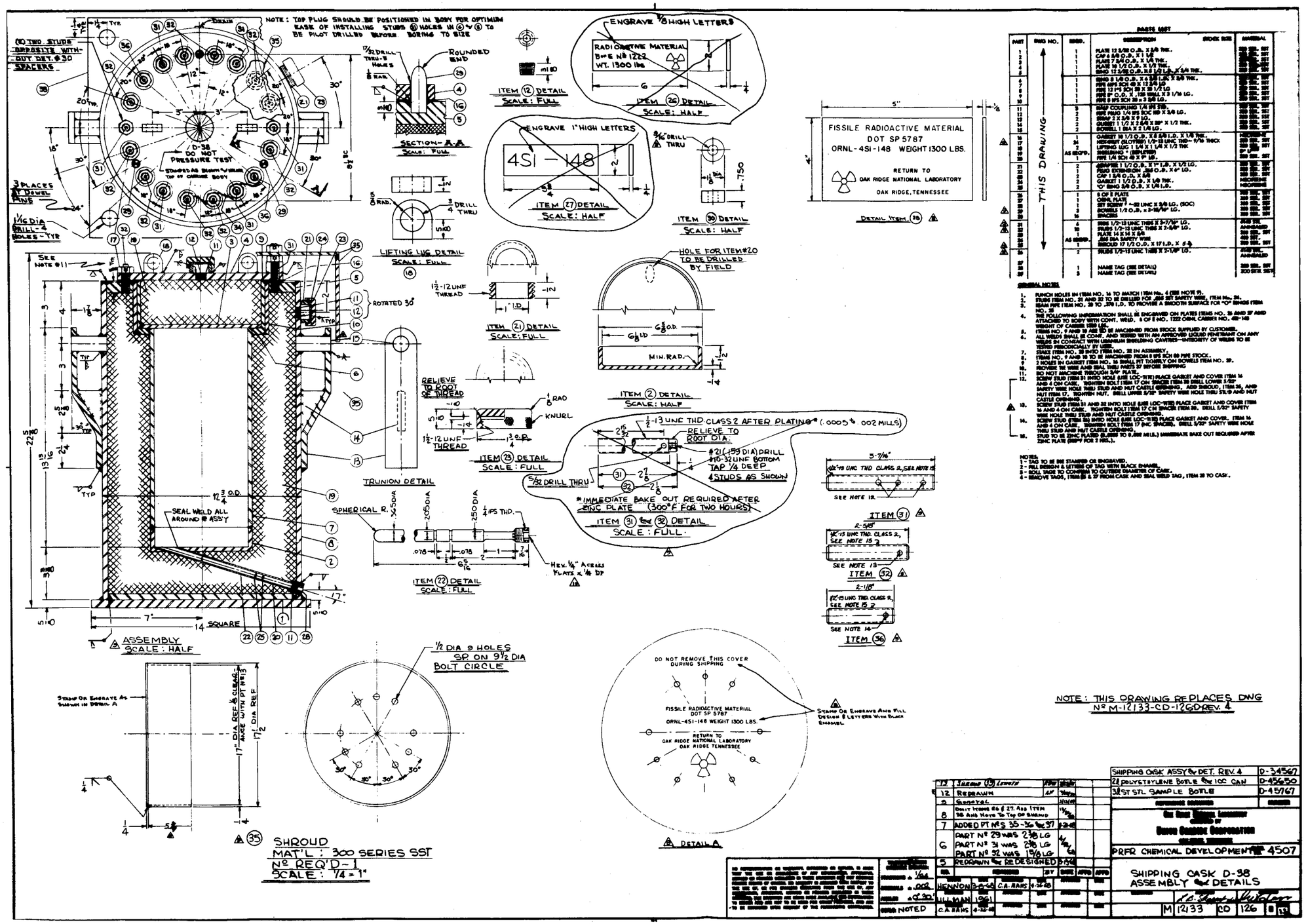
NOTE: TOP PLUG SHOULD BE POSITIONED IN BODY FOR OPTIMUM EASE OF INSTALLING STUDS & HOLES IN 5 & 6 TO BE PILOT DRILLED BEFORE BORING TO SIZE
(10) TWO STUDS OPPOSITE WITHOUT DET. #30 SPACERS
3 PLACES DOWEL PINS
1/16 DIA DRILL-4 HOLES-TYP
D-38 DO NOT PRESSURE TEST
SEAL WELD ALL AROUND ASSY
ASSEMBLY SCALE: HALF
SECTION-A-A SCALE: FULL
LIFTING LUG DETAIL SCALE: FULL
TRUNION DETAIL
ITEM (12) DETAIL SCALE: FULL
ITEM (26) DETAIL SCALE: HALF
ENGRAVE 1" HIGH LETTERS
4SI-148
ITEM (27) DETAIL SCALE: HALF
ITEM (30) DETAIL SCALE: HALF
ITEM (21) DETAIL SCALE: FULL
ITEM (23) DETAIL SCALE: FULL
ITEM (22) DETAIL SCALE: FULL
HOLE FOR ITEM #20 TO BE DRILLED BY FIELD
ITEM (2) DETAIL SCALE: HALF
1/2-13 UNC THD CLASS 2 AFTER PLATING (.0005 .002 MILS)
RELIEVE TO ROOT DIA.
#21 (.159 DIA) DRILL #10-32 UNF BOTTOM TAP 1/4 DEEP
4 STUDS AS SHOWN
5/32 DRILL THRU
IMMEDIATE BAKE OUT REQUIRED AFTER ZINC PLATE (300°F FOR TWO HOURS)
ITEM (31) & (32) DETAIL SCALE: FULL
FISSILE RADIOACTIVE MATERIAL
DOT SP 5787
ORNL-4SI-148 WEIGHT 1300 LBS.
RETURN TO
OAK RIDGE NATIONAL LABORATORY
OAK RIDGE, TENNESSEE
DETAIL ITEM (28)
ITEM (31)
ITEM (32)
ITEM (36)
SHROUD
MAT'L: 300 SERIES SST
Nº REQ'D-1
SCALE: 1/4 = 1"
1/2 DIA 9 HOLES SP ON 9 1/2 DIA BOLT CIRCLE
DO NOT REMOVE THIS COVER DURING SHIPPING
FISSILE RADIOACTIVE MATERIAL
DOT SP 5787
ORNL-4SI-148 WEIGHT 1300 LBS.
RETURN TO
OAK RIDGE NATIONAL LABORATORY
OAK RIDGE TENNESSEE
STAMP OR ENGRAVE AND FILL DESIGN & LETTERS WITH BLACK ENAMEL
DETAIL A
NOTE: THIS DRAWING REPLACES DWG Nº M-12133-CD-126 DREV. 4
SHIPPING CASK ASSY & DET. REV. 4 D-34567
22 POLYETHYLENE BOTTLE & 100 CAN D-45650
31 ST STL SAMPLE BOTTLE D-45767
PRFR CHEMICAL DEVELOPMENT 4507
SHIPPING CASK D-38 ASSEMBLY & DETAILS
M 12133 CD 126 0 13

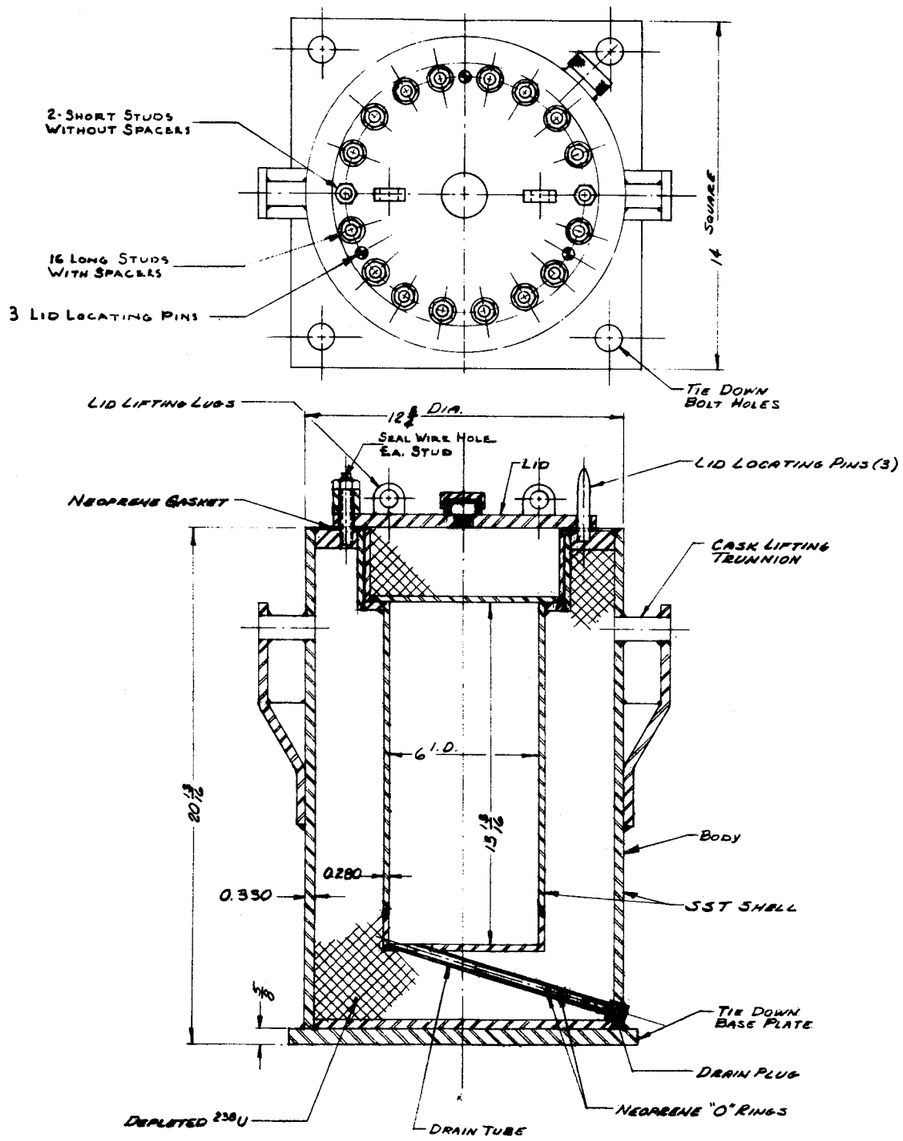


Uranium Shielded Cask
Scale 1/8"=1"

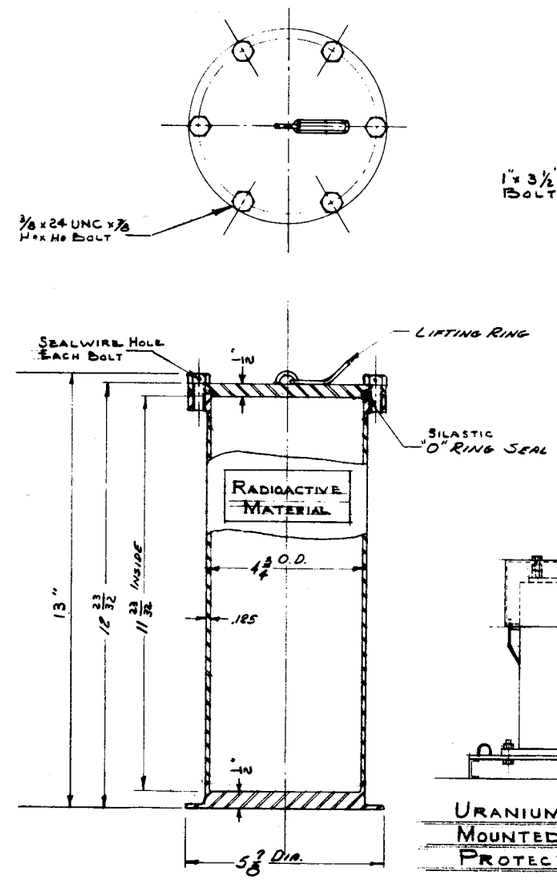


Inner Container
Scale 1/8"=1"
Stainless Steel

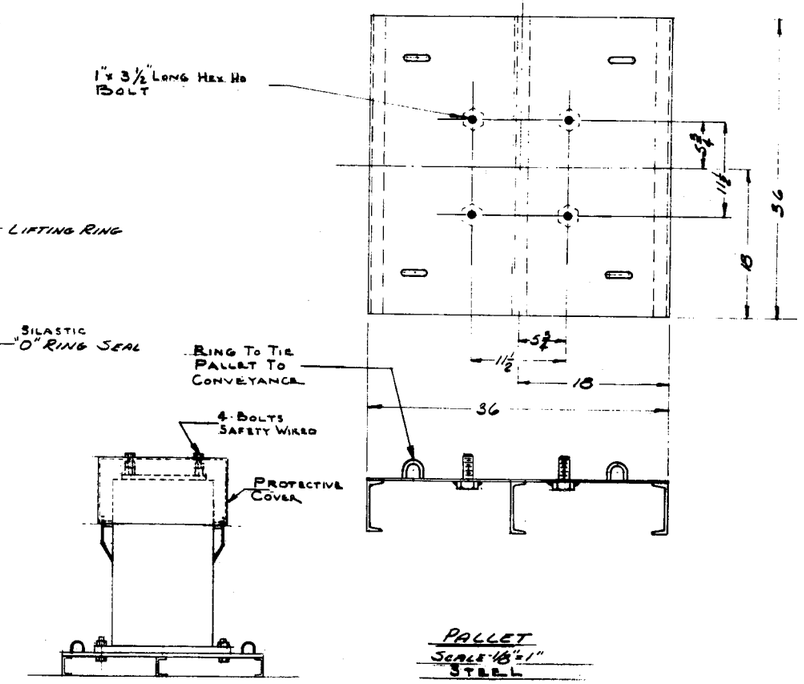


Uranium Shielded Cask
Mounted On Pallet
Protected As Shipped

Pallet
Scale 1/8"=1"
Steel

NO REPRESENTATION OR WARRANTY, EXPRESSED OR IMPLIED, IS MADE THAT THE USE OR DISCLOSURE OF ANY INFORMATION, APPARATUS, METHOD OR PROCESS DISCLOSED IN THESE DRAWINGS MAY NOT INFRINGE PRIVATE RIGHTS OF OTHERS. NO LIABILITY IS ASSUMED WITH RESPECT TO THE USE OF, OR FOR DAMAGES RESULTING FROM THE USE OF, ANY INFORMATION, APPARATUS, METHOD OR PROCESS DISCLOSED IN THESE DRAWINGS. THE DRAWINGS ARE BEING MADE AVAILABLE FOR INFORMATION TO BIDDER AND ARE NOT TO BE USED FOR OTHER PURPOSES, AND ARE TO BE RETURNED UPON REQUEST OF THE FORWARDING CONTRACTOR.

| Tolerances Unless Otherwise Specified: | | | | | |
|---|---|---|---|---|---|
| Fractions ± | | | | | |
| Decimals ± | | | | | |
| Angles ± | | | | | |
| Scale: As Noted | | | | | |

| NO. | REVISIONS | BY | DATE | APPD | APPD |
|---|---|---|---|---|---|
| 1 | Protective Cover Ht. | KDM | 7/17/68 | 0.208 | 7/17/68 |

| Designed | Date | Submitted | Date | Approved | Date |
|---|---|---|---|---|---|
| R. P. Ohver | 4-23-68 | | | | |
| Designed | Date | Approved | Date | Approved | Date |
| Checked | Date | Approved | Date | Approved | Date |

| Reference Drawings | Number |
|---|---|
| | |

Oak Ridge National Laboratory
Operated by
Union Carbide Corporation
Oak Ridge, Tennessee

Bldg. No.

Uranium Shielded Cask
D-3A (Box E 1227)

| Approved | Approved | Approved |
|---|---|---|
| B. T. Rhoades | L. B. Shappert | Lou. E. Unger |

| M | 18766 | CD | 022 | D | Sheet 2 |
|---|---|---|---|---|---|

## 11.2 Appendix B: Approval Documents


| | Date | Page |
|---|---|---|
| Second Revised Special Permit No. 5787 | Oct. 1, 1969 | 80 |
| Interim Certificate of Compliance AEC OR USA 5787/BLF | July 24, 1981 | 84 |
| ORNL Criticality Committee Nuclear Safety Review Request No. 777 | May 23, 1975 | 86 |
| Letter ORNL Transportation Committee of Approval of Internal Review of SARP | Nov.4,1977 | 88 |

DEPARTMENT OF TRANSPORTATION
HAZARDOUS MATERIALS REGULATIONS BOARD
WASHINGTON, D.C. 20590

SECOND REVISED SPECIAL PERMIT NO. 5787
(COMPLETE REVISION)

This special permit is revised pursuant to 46 CFR 146.02-25 of the U. S. Coast Guard (USCG) Dangerous Cargo Regulations and 49 CFR 170.15 of the Department of Transportation (DOT) Hazardous Materials Regulations, as amended, and on the basis of the August 19, 1969, petition by the Oak Ridge National Laboratory and their original petition dated September 17, 1968.

1. Shipments of fissile and large quantities of radioactive materials, n.o.s., are hereby authorized in the packaging as described in this special permit. This packaging, when constructed and assembled as prescribed herein, with the contents as authorized herein meets the standards prescribed in the DOT regulations, Sections 173.395(c)(2), 173.396(c)(3), and 173.398(c). Shipments must be in accordance with the provisions of the U. S. Atomic Energy Commission (USAEC), Oak Ridge Operations Office approval dated August 29, 1968, and as further provided for herein.

2. Each shipper, under this permit, other than the petitioner named above, and the other previously identified petitioner: USAEC, Oak Ridge, Tennessee, shall register his identity with this Board prior to his first shipment, and shall have a copy of this permit in his possession before making any shipment.

3. The packaging authorized by this permit consists of a stainless-steel clad, depleted uranium-shielded cask, which is a right cylinder, 12 3/4" O.D. by 22 5/8" high with a 6" diameter by 13 13/16" deep central cavity. The uranium shielding thickness is 2 3/4". Cask closure is by means of a plug-type uranium-shielded top lid, with bolted, gasketed closure. The cask weight is about 1300 pounds. Contents must be loaded within DOT Specification 2R or equivalent, primary inner containment, with liquids to be additionally contained in polyethylene or stainless steel bottles. The package is identified as the Model No. D-38 Uranium Shielded Shipping Cask, and is described on Oak Ridge National Laboratory's drawing numbers M-12166-CD-022-D and 68-4126.

4. The contents of each package authorized by this permit consist of fissile and large quantities of radioactive material n.o.s., in the form of solid and liquid mixed fission products, fuel elements, or waste products. The maximum thermal decay energy of the contents shall not exceed 80 watts and the total radioactivity shall not exceed 500 curies. The fissile radioactive material contents shall not exceed 500 grams of uranium-235, 350 grams of uranium-233 or plutonium-239, or 350 grams of any combination thereof.

5. The authorized packaging meets the requirements for shipment as Fissile Class I. The transport index must be assigned based on external radiation levels.

6. The authorized package described herein is hereby certified as meeting the specific requirements of the International Atomic Energy Agency's (IAEA) "Regulations for the Safe Transport of Radioactive Material", Safety Series No. 6, 1967 edition, as follows:

a. Marginal C-6.2.2 - The package design meets the requirements for Type B packaging for radioactive materials.

b. Marginal C-6.2.3 - The package design meets the requirements for Type B packaging for large quantity (source) radioactive materials. Specifically, the packaging design meets the requirements of Marginal C-6.2.3.1(a) for unilateral approval.

c. Marginal C-6.2.4 - The package design meets the requirements for Fissile Class I shipments.

d. Marginal C-2.4.3 - The packaging design is based on the ambient conditions.

e. Marginal C-6.5 - No special transport controls are necessary during carriage and no special arrangements have been prescribed, except as specified herein.

7. The outside of each package must be plainly and durably marked "USA DOT SP 5787" and "TYPE B", in connection with and in addition to the other markings and labels prescribed by the DOT regulations. Each shipping paper issued in connection with shipments made under this permit must bear the notation "DOT SPECIAL PERMIT NO. 5787", in connection with the commodity description thereon.

8. Each package must have its gross weight plainly and durably marked on the outside of the package.

9. This permit authorizes shipments only by vessel and motor vehicle.

10. For shipments by water:

a. A copy of this permit must be carried aboard any vessel transporting radioactive material under these terms.

b. The shipper or agent shall notify the USCG Captain of the Port in the port area through which the shipment is to be made, of the name of the vessel on which the shipment is to be made, and of the time, date, and place of loading or unloading. When the initial notification is given in a port area, it must be accompanied by a copy of this permit, addressed to the attention of that Captain of the Port.

c. Packages shall not be overstowed with any other cargo. If stowed below decks, the hold or compartment in which stowed must be ventilated.

11. The shipper is required to furnish an experience report to this Board before expiration of the permit and when any amendment is requested. This report must include the approximate number of packages shipped, and the number of packages involved in any loss of contents. The modes of transportation used for these shipments must also be shown.

12. Prior to each shipment authorized by this permit, the shipper shall notify the consignee and, for export shipments, the competent authority of any country into or through which the package will pass, of the dates of shipment and expected arrival. The shipper shall notify each consignee of any special loading/unloading instructions prior to his first shipment.

13. Any incident involving loss of contents of the package must be reported to this Board at the earliest feasible moment following the incident.

14. This permit does not relieve the shipper or carrier from compliance with any requirement of either the DOT regulations, including 46 CFR Parts 146 to 149 of the USCG Regulations, except as specifically provided for herein, or the regulations of any foreign goverment into or through which the package will be carried.

15. This permit expires September 30, 1971, and may be revoked for cause at any time.

Issued at Washington, D.C.:

E. G. Grundy, Capt.
For the Commandant
U. S. Coast Guard

1 October 1969
(Date)

W. R. Fiste
For the Administrator
Federal Highway Administration

25 September 1969
(Date)

Address all inquiries to: Secretary, Hazardous Materials Regulations Board, U.S. Department of Transportation, Washington, D.C. 20590. Attention: Special Permits.

Dist: a, b, d, h, i
USAEC, Oak Ridge, Tennessee

DOE Form EV-618
(11-77)
10 CFR 71

U.S. DEPARTMENT OF ENERGY

# CERTIFICATE OF COMPLIANCE

For Radioactive Materials Packages

| 1a. Certificate Number | 1b. Revision No. | 1c. Package Identification No. | 1d. Page No. | 1e. Total No. Pages. |
|---|---|---|---|---|
| 5787 | 1 | USA/5787/BLF(DOE-OR) | 1 | 2 |

2. PREAMBLE

2a. This certificate is issued to satisfy Sections 173.393a, 173.394, 173.395, and 173.396 of the Department of Transportation Hazardous Materials Regulations (49 CFR 170-189).

2b. The packaging and contents described in item 5 below, meets the safety standards set forth in Subpart C of Title 10, Code of Federal Regulations, Part 71, "Packaging of Radioactive Material for Transport and Transportation of Radioactive Material Under Certain Conditions."

2c. This certificate does not relieve the consignor from compliance with any requirement of the regulations of the U.S. Department of Transportation or other applicable regulatory agencies, including the government of any country through or into which the package will be transported.

3. This certificate is issued on the basis of a safety analysis report of the package design or application--

| (1) Prepared by *(Name and address)*: | (2) Title and Identification of report or application: | (3) Date: |
|---|---|---|
| Oak Ridge National Laboratory<br>Post Office Box X<br>Oak Ridge, Tennessee 37830 | Safety Analysis Report for Packaging (SARP) of the Oak Ridge National Laboratory Shipping Cask D-38<br>Report ORNL-5406 | April 1978 |

4. CONDITIONS

This certificate is conditional upon the fulfilling of the requirements of Subpart D of 10 CFR 71, as applicable, and the conditions specified in item 5 below.

5. Description of Packaging and Authorized Contents, Model Number, Fissile Class, Other Conditions, and References:

(a) Packaging:

(1) Model: D-38 Shipping Cask

(2) Description:

Packaging for transport of fissile and large quantities of radioactive material as solids including mixed fission products, fuel elements, and waste, which are contained within inner DOT Special Form Containers or meet Special Form encapsulation. Plutonium is doubly contained.

The inner cavity of the cask is a 300 Series Stainless Steel Schedule 40 pipe with inside dimensions 6-1/16 in. diameter x 13-13/16 in. high. The outer shell is a 300 Series Stainless Steel Schedule 30 pipe 20-1/2 in. high. Shielding consists of depleted uranium metal with a thickness of 2-3/4 in. The top opening plug is held in place by eighteen 1/3-in. studs equipped with nuts. The plug is sealed with a neoprene gasket. The cask is mounted on a 14-in. square x 5/8-in. thick base plate. Six of the studs are extra long so that a protective shroud may be utilized during transport. The cask is bolted with four 1-in. bolts to a 3-ft. square pallett.

The gross weight of the package is 1525 lb.

| 6a. Date of Issuance: July 24, 1981 | 6b. Expiration Date: |
|---|---|
| FOR THE U.S. DEPARTMENT OF ENERGY | |
| 7a. Address *(of DOE Issuing Office)*<br>U.S. Department of Energy<br>Post Office Box E<br>Oak Ridge, Tennessee 37830 | 7b. Signature, Name, and Title *(of DOE Approving Official)*<br>HW Hillis<br>for William H. Travis, Director<br>Safety & Environmental Control Division |

(3) Drawings

The cask is described and fabricated in accordance with Union Carbide Corporation, Nuclear Division, Oak Ridge National Laboratory drawings:

M-12133-CD-126E. Rev. 12 and M-12166-CD-022 Rev. 1.

(b) Contents:

Type and form of material:

(1) Solid, large quantity of radioactive materials, fissile and nonfissile, packaged in DOT Specification 2R inner Container(s) or meeting Special Form. Plutonium will be doubly contained inside the cask. Dry heat load does not exceed 80 watts. Heat loads in excess of 20 watts are shipped "exclusive-use" of vehicle.

(2) External radiation levels will be within the levels prescribed by DOT Regulations, Title 49 CFR 173.393.

(3) Specific limits of contents:

(i) 500 g of $^{235}U$,

(ii) 350 g of $^{233}U$ or $^{239}Pu$,

(iii) 350 g of any combination of (i) or (ii) above.

(c) Fissile Class: I

# REQUEST FOR NUCLEAR SAFETY REVIEW

This request covers operations with fissile material in a control area and/or fissile material transfers that originate within the control area. The control area supervisor shall complete the blocks below and describe the process and/or operations to be performed, emphasizing the provisions for nuclear criticality safety on the reverse side of this page. This request shall be approved by the Radiation Control Officers of the originating Division and of Division(s) having active NSRs in the Control Area.

ORNL
CRITICALITY COMMITTEE
NSR NO. 887
EXPIRATION DATE
July, 1985

## TITLE, CONTROL AREA, AND SUMMARY OF BASIC CONTROL PARAMETERS

(To be completed by the Control Area Supervisor)

| | | | |
|---|---|---|---|
| TITLE (FOR REFERENCE PURPOSES) Uranium Shielded Cask D-38 AEC or USA Permit No. 5787/BLF | | DATE OF REQUEST 8/3/81 | DATE REVIEW REQUIRED |
| CONTROL AREA | BALANCE AREA / BUILDING ROOM | DIVISION Chem. Tech. | |

| | |
|---|---|
| TYPE AND FORM OF MATERIAL | Solids, as mixed fission products, fuel elements or waste products |
| ACTIVE NSRs IN THE CONTROL AREA | |
| QUANTITY OF FISSILE ISOTOPES — PER ISOLATED BATCH OR UNIT – MASS AND ISOTOPIC PERCENTAGE | 500 grams $^{235}U$ or 350 grams of $^{233}U$ or $^{239}Pu$ or 350 grams of any combination mixed fission product activity <500 curies |
| TOTAL TO BE PROCESSED | Not applicable |
| TOTAL FISSILE ISOTOPES IN CONTROL AREA | Not applicable |
| Concentration or Density of Fissile Material | Not limited |
| Spacing of Fissile Units | DOT Transportation Index 0 |
| Proximity and Type of Neutron Reflectors or Adjacent Fissile Material | Not applicable |
| Limit on Moderation | Not applicable |
| Limit on Neutron Absorbers | Not applicable |
| Limit on Volume or Dimensions of Containers | Cavity 6 in. diam x 13-13/16 in. deep |

THIS REQUEST: ☐ Modifies ☒ Replaces NSR No. 777 ☐ New NSR

## RECOMMENDATIONS

(To be completed by the Criticality Committee)

This endorsement is based on our present understanding of the operation (whether acquired verbally or in writing) and is subject to review and cancellation.

| | |
|---|---|
| Recommended maximum per isolated batch or unit | |
| Recommended maximum for the Control Area | |

The request is approved.

J. T. Thomas — CHAIRMAN, CRITICALITY COMMITTEE — 8/3/81 DATE

UCN-5917
(3 8-78)

**PROVISIONS FOR NUCLEAR CRITICALITY SAFETY**
(To be completed by the Control Area Supervisor)

Provisions for nuclear criticality safety shall be described below in accordance with Appendices II and III of the DOE Manual Chapter 0530. This shall include brief descriptions of the process and/or all operations to be performed, plans and procedures for the operations for nuclear criticality safety, and the basic control parameters. Please attach 11 copies of referenced drawings and documents.

Subject to the mass limitations specified for each container (500 g $^{235}U$, 350 g $^{233}U$, or $^{239}Pu$, or 350 g of any combination of these isotopes) the cask meets the requirements for DOT Transportation Index 0. This designation is based on the Keno Monte Carlo calculation programmed by J. T. Thomas (see attached memo). These calculations showed that the multiplication factor for an infinite array of casks containing aqueous solutions of $^{235}U$ at hydrogen to uranium ratios corresponding to minimum mass and minimum volume concentrations was less than 0.85.

| ORNL CRITICALITY COMMITTEE | |
|---|---|
| NSR. NO. | 887 |
| EXPIRATION DATE | July, 1985 |

Orig.signed by Rex E. Leuze

| RADIATION CONTROL OFFICER | DIVISION | CONTROL AREA SUPERVISOR Ray E. Leuze 5/4/81 | BUILDING 3019 |
|---|---|---|---|
| RADIATION CONTROL OFFICER | DIVISION | RADIATION CONTROL OFFICER J B Rich | DIVISION CTD |

# INTRA-LABORATORY CORRESPONDENCE

OAK RIDGE NATIONAL LABORATORY

November 4, 1977

To: R. D. Seagren

From: Transportation Committee

Subject: SARP - ORNL Shipping Cask D-38

The Committee has reviewed your Draft dated October 17, 1977, for the subject cask. The SARP is approved for technical content and approach in performing the analysis.

Attached are comments from some individuals of the Committee for changes needed or suggested.

E. M. King

E. M. King

cc: Transportation Committee
H. G. Burger
J. A. Cox

## 11.3 Appendix C: Computer Program to Calculate Corner Drop Negative Acceleration Forces

### Program 1001 Cask
### Derivation of Equations

When a cask constructed of single ideally plastic material impacts on its top corner, the major portion of the kinetic energy will be dissipated through displacement of material in the impact area. An ideally plastic material is a material that has a constant stress for all values of strain.

The expression

$$dU = S\,dV, \tag{11.1}$$

where

S = the quantity of energy required to displace a unit volume of material;

V = the displaced volume of material and can be used as a basis for determining the effect of the top-corner impact. The lack of an accurate numerical value of S necessitates a conservative estimation of its value.

With reference to the computational diagram illustrated in Fig. 11.1, it may be said that

$$dU = 1/2\,XY\,dZ. \tag{11-2}$$

By trigonometry,

$$X = r(\cos B - \cos A), \tag{11-3}$$

$$Y = X \tan \alpha = \tan \alpha\, r(\cos B - \cos A), \tag{11-4}$$

$$dZ = r \cos B dB. \tag{11-5}$$

It follows that,

$$dU = \frac{SXYdZ}{2} \tag{11-6}$$

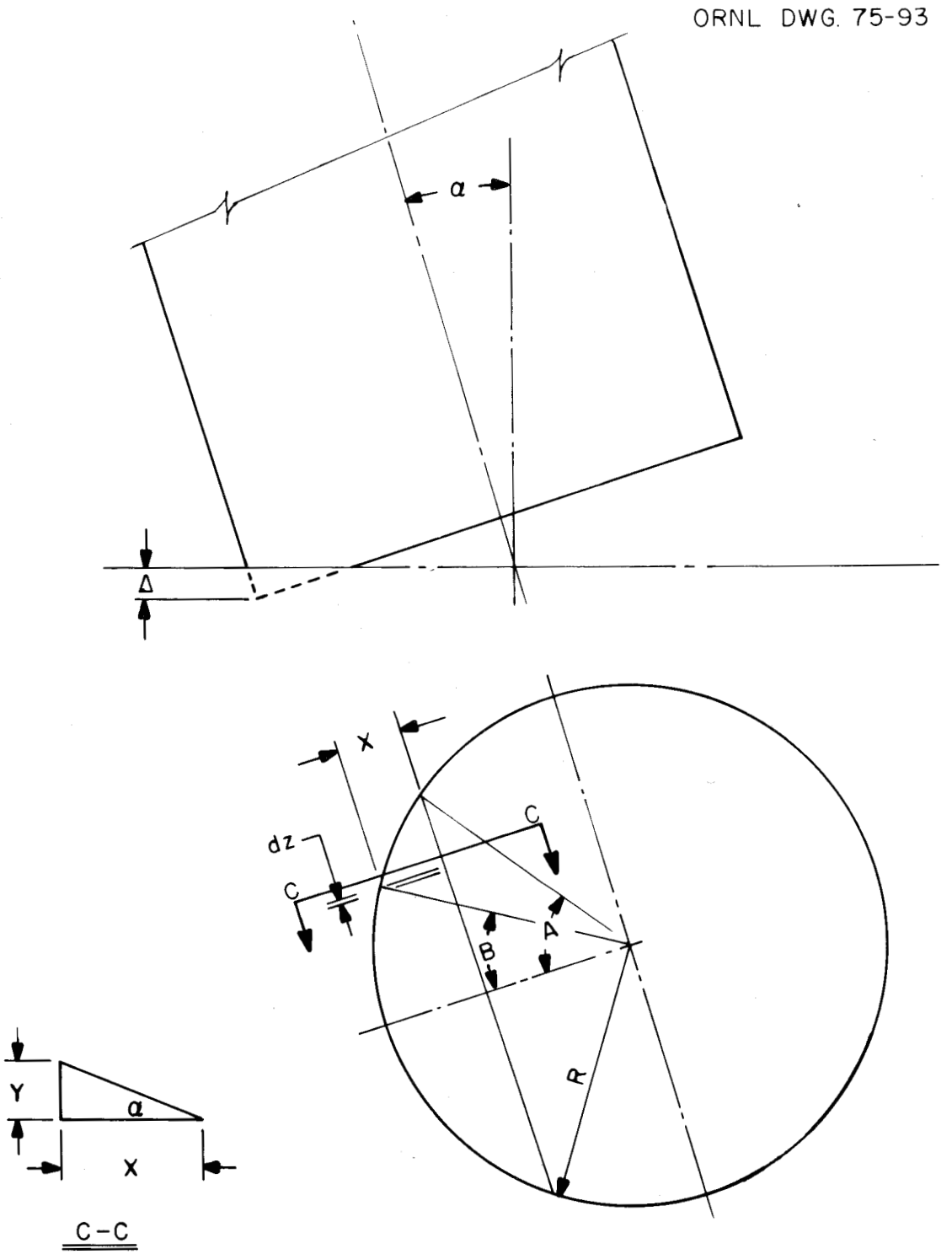


Fig. 11.1 Model for corner drop calculations.

and

$$U = \Sigma dU = \Sigma \frac{SXYdZ}{2} \tag{11-7}$$

This expression can be readily solved using the computer. The value for the angle A can be assumed, and B can be incremented from -A to A or from 0 to A if the result is multiplied by 2 and the energy required for the assumed deformation is computed. A is started small, incremented, and the energy required is compared with the cask's potential energy. In this manner a calculated impact history is produced. The program also computes other variables using the expressions below: The maximum deformation, $\Delta$,

$$\Delta = \sin \alpha \, (1 - \cos A) \, (r). \tag{11-8}$$

The applied force, F, $F = dU/d\Delta$, and the acceleration, a, was computed from the equation

$$a = \frac{F}{\underline{W}g} \tag{11-9}$$

The velocity at any increment is found from the kinetic energy principle

$$\Delta KE = U = \left(\frac{M}{2}\right)\left(V_0{}^2 - V^2\right) \tag{11-10}$$

or

$$V = \left(V_0{}^2 - \frac{2U}{M}\right)^{1/2} = \left[\left(\frac{2g}{\underline{W}}\right) \underline{W}h - U\right)\right]^{1/2} \tag{11-10a}$$

where

$V_o$ = initial velocity,

M = cask mass,

$\underline{W}$ = weight,

h = drop height,

g = gravitational constant.

The time is computed from the relationship

$$a = dV/dt \tag{11-11}$$

or

$$dt = dV/a \tag{11-11a}$$

and summary techniques.

The computer program is given and the results for specific energies of 100,000 and 260,000 in.-lb/in.$^3$ are given. The plots of the negative accelerations vs deformation are given in Figs. 11.2 and 11.3.

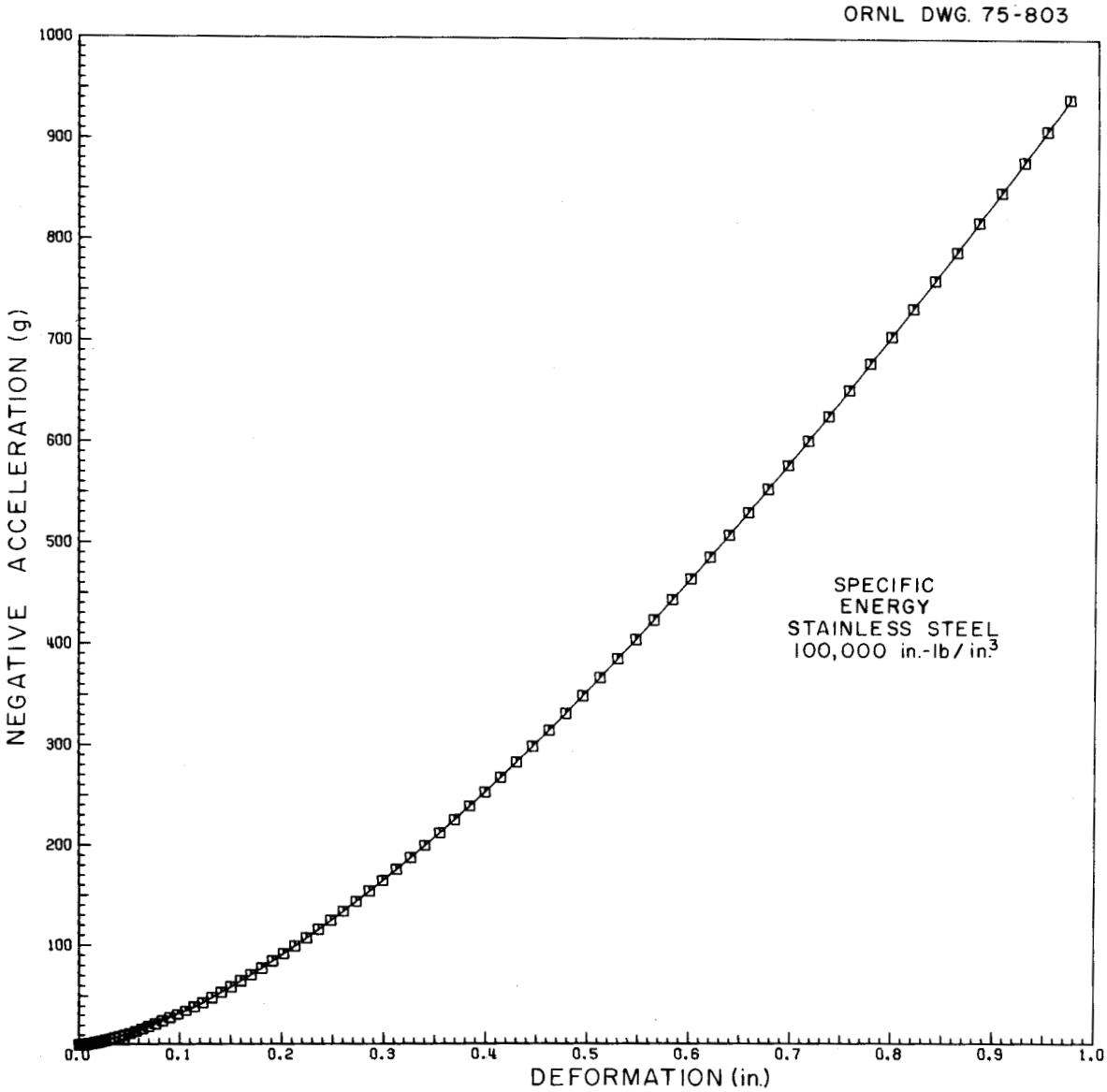


Fig. 11.2 Plot of negative acceleration vs deformation at specific energy of 100,000 in.-lb/in.$^3$ for stainless steel shipping container during a 30-ft corner drop.

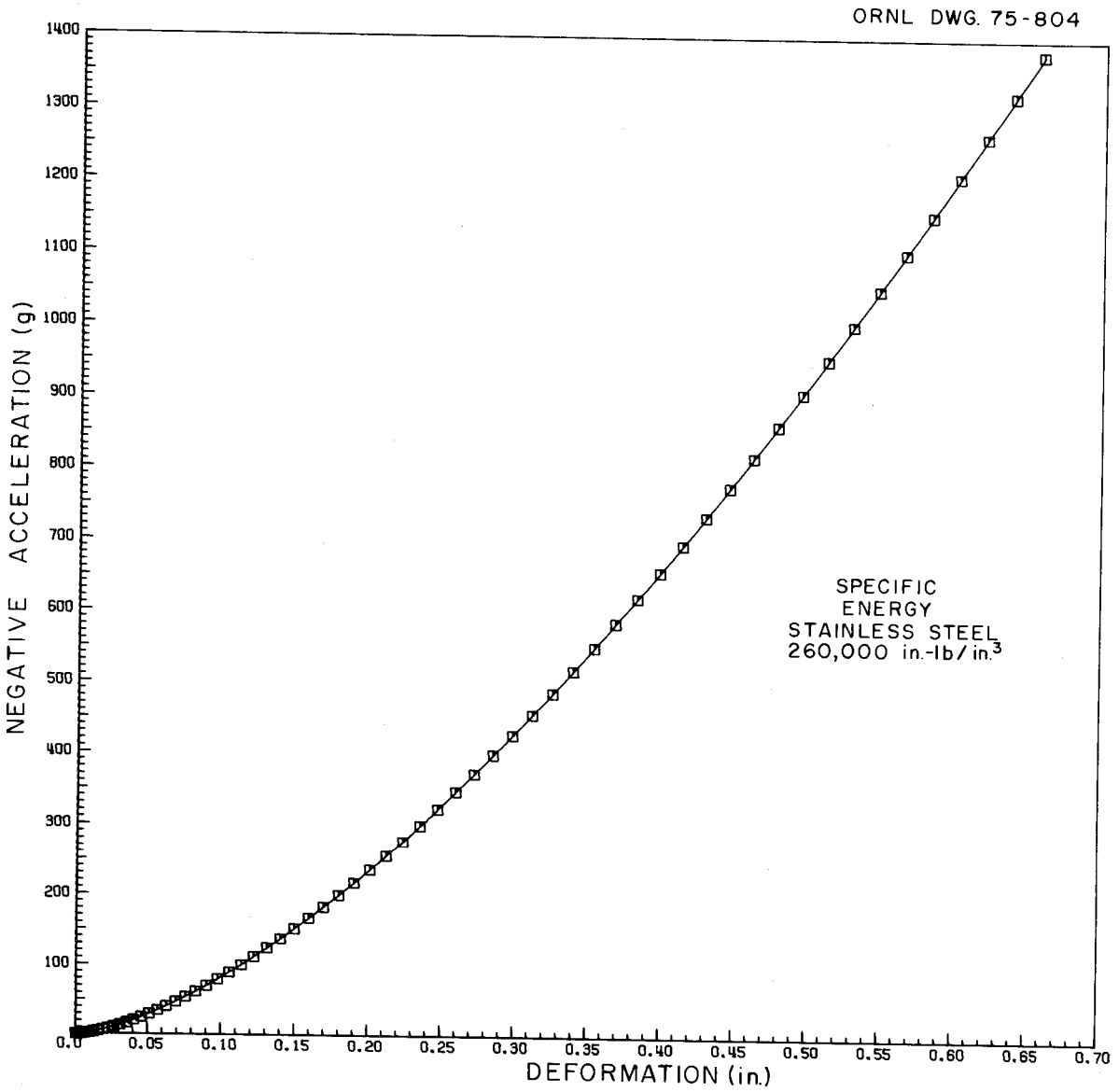


Fig. 11.3 Plot of negative acceleration vs deformation at specific energy of 260,000 in.-lb/in.$^3$ for stainless steel shipping container during a 30-ft corner drop.

```
**FTN,L,E,G.
C              PROGRAM NUMBER  1001-CASK
C  MADE OF A HOMOGENEOUS MATERIAL / AN IDEAL STRESS-STRAIN RELATIONSHIP
C  IMPACTING AN UNYIELDING SURFACE. THE CASK IMPACTS ON ITS CORNER
C  THIS PROGRAM COMPUTES THE RESPONSE OF A CASK HAVING RIGHT CYLINDRICAL
C  GEOMETRY.
C   BY JOHN EVANS P.E., GENERAL ENGINEERING DIVISION, OAK RIDGE NATIONAL LAB.
C
C                        GLOSSARY OF NOTATION
C             R=RADIUS OF CASK
C             C=CASK LENGTH
C             S=YIELD STRESS OR FLOW PRESSURE
C             W=CASK WEIGHT
C             H=DROP HEIGHT
C             O=ANGLE AT WHICH CASK IMPACTS
C             U=ENERGY
C             F=FORCE
C             T=TIME
C             AG=ACCELERATION
C             UT=TOTAL ENERGY
C             V=VELOCITY
C             X=DEFORMATION
C             AN=ANGLE IN CONTACT / THE SURFACE
C
      DIMENSION V(1000),AR(1000),F(1000),U(1000),T(1000),AN(1000),
     1 X(1000),AG(1000)
      PI=3.141596254
      S=0.0
      ANA = 0.0
C  INPUT MATERIAL CONSTANT
C  INPUT CASK GEOMETRY
 1010 FORMAT(1H ,30X,'URANIUM SHIELDED CASK D-38')
      W=1525.
      R=6.375
      C=22.625
      O=ATAN(1.9626)
      DO 90 MM=1,2
      H=48
      IF(MM.EQ.2) H=360.
      DO 90 M=1,2
      S=100000.
      IF(M.EQ.2) S=260000.
C  INPUT TEST CONDITION
C  INPUT ANGLE INCREMENTS
   30 BB=.01
      AA=.01
      WRITE (51,1002)
      WRITE (51,1002)
      WRITE (51,1010)
      WRITE (51,1002)
      WRITE (51,1002)
C  ZERO SUBSCRIPTED VARIABLES
      DO 14 I=1,1000
      AN(I)=0.0
      AG(I)=0.0
      V(I)=0.0
      X(I)=0.0
```

```
      T(I)=0.0
      F(I)=0.0
      U(I)=0.0
      AR(I)=0.0
   14 CONTINUE
C  ZERO NONSUBSCRIPTED VARIABLES
      TA=0.0
      AE=0.0
      A=0.0
      AR=0.0
      TX=0.0
      U=0.0
      XX=0.0
      XA=0.0
      UT=W*H
      VV=SQRT((64.*H)/12.)
      DO 1 I=1,1000
      AR=0.0
C  INCREMENT ANGLE A
    9 A=A+AA
      CA=COS(A)
      B=0.0
      AE=0.0
      SUMU=0.0
   10 DO 2 J=1,1000
C  INCREMENT ANGLE B
      B=B+BB
      CB=COS(B)
C  CALCULATE VOLUME DISPLACED
   11 CC=(CB-CA)
      BY=TAN(O)*R*CC
      BX=R*CC
   12 DZ=R*CB*BB
      DU=BY*BX*DZ*S
C  CALCULATE ENERGY ABSORBED
      SUMU=SUMU+DU
C  CALCULATE AREA
   13 DA=2.*BX*DZ/COS(O)
      AE=AE+DA
      IF(B.GE.A) GO TO 3
    2 CONTINUE
    3 U(I)=SUMU
      AR(I)=AE
C  CALCULATE FORCE
      F(I)=AR(I)*S
C  CALCULATE VELOCITY
      IF(U(I).GE.UT) GO TO 16
    5 VA  =SQRT((64./(12.*W))*(UT-U(I)))
   16 IF (U(I).GE.UT) VA=0.0
C CALCULATE ACCELERATION
      AG(I)=F(I)/W
C CALCULATE DEFORMATION
      XA  =(TAN(O)*COS(O)*R*(1.-CA))
      X(I)=XA
C CALCULATE TIME
      TX=(XA-XX)/((VV+VA)*6.)
    7 TA=TA+TX
```

```
      T(I)=TA*1000.
      XX=XA
    6 V(I)=VA
    8 VV=VA
      AN(I)=A*57.3
      IF(U(I).GE.UT) GO TO 4
    1 CONTINUE
    4 CONTINUE
C    OUTPUT-WRITE LOOP
      K=I
      WRITE (51,1002)
      WRITE(51,1004)
 1004 FORMAT (1H, 9X,37HCASK GEOMETRY AND MATERIAL PROPERTIES)
      WRITE (51,1002)
      WRITE(51,1005)
 1005 FORMAT (1H, 4X,6HRADIUS,8X,6HLENGTH,10X,6HWEIGHT,6X,
     1        15HSPECIFIC ENERGY)
      WRITE(51,1006)
 1006 FORMAT (1H, 4X,6HINCHES,8X,6HINCHES,10X,6HPOUNDS,8X
     1        13HLB-IN/CU. IN.)
      WRITE(51,1002)
 1002 FORMAT(1H0)
      WRITE(51,1007) R,C,W,S
 1007 FORMAT (F11.3,F14.3,F16.1,F18.1)
      WRITE(51,1002)
      WRITE(51,1000)
 1000 FORMAT (1H.,4X,11HDEFORMATION,4X,8HVELOCITY,7X,4HTIME,13X,5HFORCE,
     1        10X,6HENERGY,5X,12HACCELERATION)
      WRITE(51,1001)
 1001 FORMAT (1H, 6X,6HINCHES,7X,8HFT./SEC.,4X,12HMILLISECONDS,8X,
     1        6HPOUNDS,10X,6HLB-IN.,10X,3HX G)
      WRITE(51,1002)
      DO 15 I=1,K
      WRITE(51,1003) X(I),V(I),T(I),F(I),U(I),AG(I)
 1003 FORMAT(1H ,F14.4,F13.2,F16.5,F15.2,F16.2,F12.2)
   15 CONTINUE
      CALL QWIKPL(X,AG,K,'LINEAR','J.H.EVANS$')
   20 CONTINUE
   90 CONTINUE
      STOP
      END
```

URANIUM SHIELDED CASK D-38

CASK GEOMETRY AND MATERIAL PROPERTIES

| RADIUS INCHES | LENGTH INCHES | WEIGHT POUNDS | SPECIFIC ENERGY LB-IN/CU. IN. |
|---|---|---|---|
| 6.375 | 22.625 | 1525.0 | 100000.0 |

| DEFORMATION INCHES | VELOCITY FT./SEC. | TIME MILLISECONDS | FORCE POUNDS | ENERGY LB-IN. | ACCELERATION X G |
|---|---|---|---|---|---|
| 0.0003 | 43.82 | 0.00054 | 0.0 | 0.0 | 0.0 |
| 0.0011 | 43.82 | 0.00216 | 26.86 | 0.01 | 0.02 |
| 0.0026 | 43.82 | 0.00486 | 116.36 | 0.11 | 0.08 |
| 0.0045 | 43.82 | 0.00864 | 304.24 | 0.53 | 0.20 |
| 0.0071 | 43.82 | 0.01350 | 626.31 | 1.72 | 0.41 |
| 0.0102 | 43.82 | 0.01944 | 1118.10 | 4.44 | 0.73 |
| 0.0139 | 43.82 | 0.02646 | 1815.35 | 9.85 | 1.19 |
| 0.0182 | 43.82 | 0.03455 | 2753.46 | 19.58 | 1.81 |
| 0.0230 | 43.82 | 0.04372 | 3967.85 | 35.78 | 2.60 |
| 0.0284 | 43.82 | 0.05397 | 5493.85 | 61.27 | 3.60 |
| 0.0343 | 43.81 | 0.06529 | 7366.68 | 99.55 | 4.83 |
| 0.0408 | 43.81 | 0.07769 | 9621.27 | 154.92 | 6.31 |
| 0.0479 | 43.81 | 0.09116 | 12292.59 | 232.51 | 8.06 |
| 0.0556 | 43.80 | 0.10570 | 15415.19 | 338.42 | 10.11 |
| 0.0638 | 43.80 | 0.12132 | 19023.82 | 479.75 | 12.47 |
| 0.0726 | 43.79 | 0.13800 | 23152.68 | 664.67 | 15.18 |
| 0.0819 | 43.78 | 0.15576 | 27835.71 | 902.52 | 18.25 |
| 0.0918 | 43.77 | 0.17458 | 33107.20 | 1203.88 | 21.71 |
| 0.1022 | 43.75 | 0.19448 | 39000.27 | 1580.57 | 25.57 |
| 0.1132 | 43.74 | 0.21545 | 45548.93 | 2045.86 | 29.87 |
| 0.1248 | 43.71 | 0.23748 | 52785.71 | 2614.36 | 34.61 |
| 0.1369 | 43.69 | 0.26059 | 60744.02 | 3302.27 | 39.83 |
| 0.1496 | 43.65 | 0.28478 | 69456.13 | 4127.27 | 45.54 |
| 0.1628 | 43.61 | 0.31003 | 78954.19 | 5108.65 | 51.77 |
| 0.1766 | 43.57 | 0.33637 | 89270.38 | 6267.51 | 58.54 |
| 0.1909 | 43.51 | 0.36380 | 100436.25 | 7626.57 | 65.86 |
| 0.2058 | 43.45 | 0.39231 | 112482.69 | 9210.34 | 73.76 |
| 0.2212 | 43.37 | 0.42192 | 125441.25 | 11045.22 | 82.26 |
| 0.2372 | 43.29 | 0.45263 | 139341.88 | 13159.52 | 91.37 |
| 0.2537 | 43.19 | 0.48446 | 154215.69 | 15583.50 | 101.13 |
| 0.2708 | 43.08 | 0.51741 | 170091.50 | 18349.39 | 111.54 |
| 0.2883 | 42.95 | 0.55150 | 186999.19 | 21491.43 | 122.62 |
| 0.3065 | 42.81 | 0.58675 | 204967.44 | 25046.03 | 134.40 |
| 0.3252 | 42.64 | 0.62317 | 224025.00 | 29051.65 | 146.90 |
| 0.3444 | 42.46 | 0.66080 | 244199.75 | 33548.99 | 160.13 |
| 0.3641 | 42.25 | 0.69964 | 265519.00 | 38580.80 | 174.11 |
| 0.3844 | 42.02 | 0.73974 | 288011.13 | 44192.29 | 188.86 |
| 0.4052 | 41.76 | 0.78113 | 311701.75 | 50430.77 | 204.39 |
| 0.4265 | 41.47 | 0.82385 | 336618.13 | 57345.84 | 220.73 |
| 0.4484 | 41.14 | 0.86795 | 362784.38 | 64989.52 | 237.89 |
| 0.4708 | 40.78 | 0.91348 | 390227.31 | 73415.50 | 255.89 |
| 0.4937 | 40.38 | 0.96051 | 418970.81 | 82681.44 | 274.73 |
| 0.5171 | 39.94 | 1.00910 | 449039.06 | 92845.81 | 294.45 |
| 0.5410 | 39.45 | 1.05935 | 480456.44 | 103970.44 | 315.05 |
| 0.5655 | 38.91 | 1.11136 | 513245.44 | 116118.75 | 336.55 |
| 0.5904 | 38.31 | 1.16524 | 547428.56 | 129356.88 | 358.97 |
| 0.6159 | 37.65 | 1.22113 | 583028.00 | 143753.88 | 382.31 |
| 0.6419 | 36.91 | 1.27919 | 620066.06 | 159380.44 | 406.60 |
| 0.6684 | 36.10 | 1.33964 | 658561.75 | 176310.19 | 431.84 |
| 0.6953 | 35.20 | 1.40271 | 698536.75 | 194619.00 | 458.06 |
| 0.7228 | 34.21 | 1.46869 | 740011.00 | 214385.44 | 485.25 |
| 0.7508 | 33.10 | 1.53796 | 783002.25 | 235689.94 | 513.44 |
| 0.7793 | 31.87 | 1.61099 | 827530.06 | 258615.31 | 542.64 |
| 0.8082 | 30.49 | 1.68840 | 873612.06 | 283247.31 | 572.86 |
| 0.8377 | 28.93 | 1.77100 | 921264.25 | 309674.00 | 604.11 |
| 0.8676 | 27.17 | 1.85993 | 970505.19 | 337985.25 | 636.40 |
| 0.8980 | 25.14 | 1.95683 | 1021350.56 | 368273.63 | 669.74 |
| 0.9289 | 22.78 | 2.06427 | 1073814.00 | 400633.81 | 704.14 |
| 0.9603 | 19.95 | 2.18660 | 1127912.00 | 435163.06 | 739.61 |
| 0.9921 | 16.41 | 2.33251 | 1183658.00 | 471961.00 | 776.17 |
| 1.0244 | 11.51 | 2.52534 | 1241065.00 | 511127.94 | 813.81 |
| 1.0572 | 0.0 | 2.99993 | 1300146.00 | 552767.81 | 852.55 |

PLOT CALL OUTSIDE LIMITS X=0.0 Y=-.1100E 02 IPEN= 3

URANIUM SHIELDED CASK D-38

CASK GEOMETRY AND MATERIAL PROPERTIES

| RADIUS INCHES | LENGTH INCHES | WEIGHT POUNDS | SPECIFIC ENERGY LB-IN/CU. IN. |
|---|---|---|---|
| 6.375 | 22.625 | 1525.0 | 260000.0 |

| DEFORMATION INCHES | VELOCITY FT./SEC. | TIME MILLISECONDS | FORCE POUNDS | ENERGY LB-IN. | ACCELERATION X G |
|---|---|---|---|---|---|
| 0.0003 | 43.82 | 0.00054 | 0.0 | 0.0 | 0.0 |
| 0.0011 | 43.82 | 0.00216 | 69.83 | 0.03 | 0.05 |
| 0.0026 | 43.82 | 0.00486 | 302.53 | 0.29 | 0.20 |
| 0.0045 | 43.82 | 0.00864 | 791.02 | 1.38 | 0.52 |
| 0.0071 | 43.82 | 0.01350 | 1628.40 | 4.47 | 1.07 |
| 0.0102 | 43.82 | 0.01944 | 2907.05 | 11.55 | 1.91 |
| 0.0139 | 43.82 | 0.02646 | 4719.90 | 25.62 | 3.10 |
| 0.0182 | 43.82 | 0.03455 | 7158.99 | 50.90 | 4.69 |
| 0.0230 | 43.81 | 0.04372 | 10316.41 | 93.04 | 6.76 |
| 0.0284 | 43.81 | 0.05397 | 14284.02 | 159.31 | 9.37 |
| 0.0343 | 43.81 | 0.06529 | 19153.38 | 258.84 | 12.56 |
| 0.0408 | 43.80 | 0.07769 | 25015.30 | 402.78 | 16.40 |
| 0.0479 | 43.79 | 0.09117 | 31960.73 | 604.52 | 20.96 |
| 0.0556 | 43.78 | 0.10572 | 40079.50 | 879.89 | 26.28 |
| 0.0638 | 43.77 | 0.12134 | 49461.94 | 1247.34 | 32.43 |
| 0.0726 | 43.75 | 0.13804 | 60196.98 | 1728.15 | 39.47 |
| 0.0819 | 43.72 | 0.15582 | 72372.81 | 2346.55 | 47.46 |
| 0.0918 | 43.69 | 0.17467 | 86078.69 | 3130.08 | 56.45 |
| 0.1022 | 43.65 | 0.19461 | 101400.69 | 4109.48 | 66.49 |
| 0.1132 | 43.61 | 0.21563 | 118427.19 | 5319.22 | 77.66 |
| 0.1248 | 43.55 | 0.23774 | 137242.81 | 6797.32 | 90.00 |
| 0.1369 | 43.47 | 0.26095 | 157934.44 | 8585.87 | 103.56 |
| 0.1496 | 43.39 | 0.28527 | 180585.94 | 10730.87 | 118.42 |
| 0.1628 | 43.28 | 0.31070 | 205280.94 | 13282.55 | 134.61 |
| 0.1766 | 43.16 | 0.33726 | 232103.00 | 16295.57 | 152.20 |
| 0.1909 | 43.02 | 0.36497 | 261134.38 | 19829.13 | 171.24 |
| 0.2058 | 42.85 | 0.39385 | 292455.06 | 23946.96 | 191.77 |
| 0.2212 | 42.66 | 0.42391 | 326147.25 | 28717.63 | 213.87 |
| 0.2372 | 42.43 | 0.45519 | 362289.00 | 34214.83 | 237.57 |
| 0.2537 | 42.17 | 0.48773 | 400960.81 | 40517.18 | 262.93 |
| 0.2708 | 41.87 | 0.52155 | 442237.94 | 47708.50 | 289.99 |
| 0.2883 | 41.53 | 0.55672 | 486197.94 | 55877.80 | 318.82 |
| 0.3065 | 41.14 | 0.59329 | 532915.44 | 65119.76 | 349.45 |
| 0.3252 | 40.69 | 0.63132 | 582465.13 | 75534.00 | 381.94 |
| 0.3444 | 40.19 | 0.67091 | 634919.31 | 87226.94 | 416.34 |
| 0.3641 | 39.61 | 0.71215 | 690349.50 | 100309.50 | 452.69 |
| 0.3844 | 38.96 | 0.75515 | 748829.00 | 114899.44 | 491.04 |
| 0.4052 | 38.23 | 0.80007 | 810424.56 | 131119.38 | 531.43 |
| 0.4265 | 37.40 | 0.84708 | 875207.13 | 149098.69 | 573.91 |
| 0.4484 | 36.46 | 0.89641 | 943239.38 | 168971.94 | 618.52 |
| 0.4708 | 35.39 | 0.94833 | 1014591.00 | 190880.88 | 665.31 |
| 0.4937 | 34.18 | 1.00319 | 1089324.00 | 214972.69 | 714.31 |
| 0.5171 | 32.80 | 1.06147 | 1167501.00 | 241400.31 | 765.57 |
| 0.5410 | 31.22 | 1.12379 | 1249186.00 | 270324.31 | 819.14 |
| 0.5655 | 29.40 | 1.19102 | 1334438.00 | 301909.94 | 875.04 |
| 0.5904 | 27.27 | 1.26443 | 1423314.00 | 336329.63 | 933.32 |
| 0.6159 | 24.76 | 1.34603 | 1515872.00 | 373761.38 | 994.01 |
| 0.6419 | 21.70 | 1.43923 | 1612171.00 | 414391.13 | 1057.16 |
| 0.6684 | 17.80 | 1.55098 | 1712260.00 | 458408.19 | 1122.79 |
| 0.6953 | 12.26 | 1.70057 | 1816195.00 | 506011.13 | 1190.95 |
| 0.7228 | 0.0 | 2.07412 | 1924028.00 | 557404.31 | 1261.66 |

PLOT CALL OUTSIDE LIMITS X=0.0 Y=-.1100E 02 IPEN= 3

INC002I STOP 00000

## 11.4 Appendix D: Computer Program to Calculate Side-Drop Negative Acceleration Forces

The computer program was the same as derived in Appendix C; however, the program was changed to reflect the change in the angle of impact. The angle, $\alpha$, in Fig. 11.1 was 63° for the side drop.

The computer program is given and the results of specific energies are given for stainless steel of 100,000 and 260,000 in.-lb/in.$^3$. The plots of the negative accelerations vs deformations are given in Figs. 11.4 and 11.5.

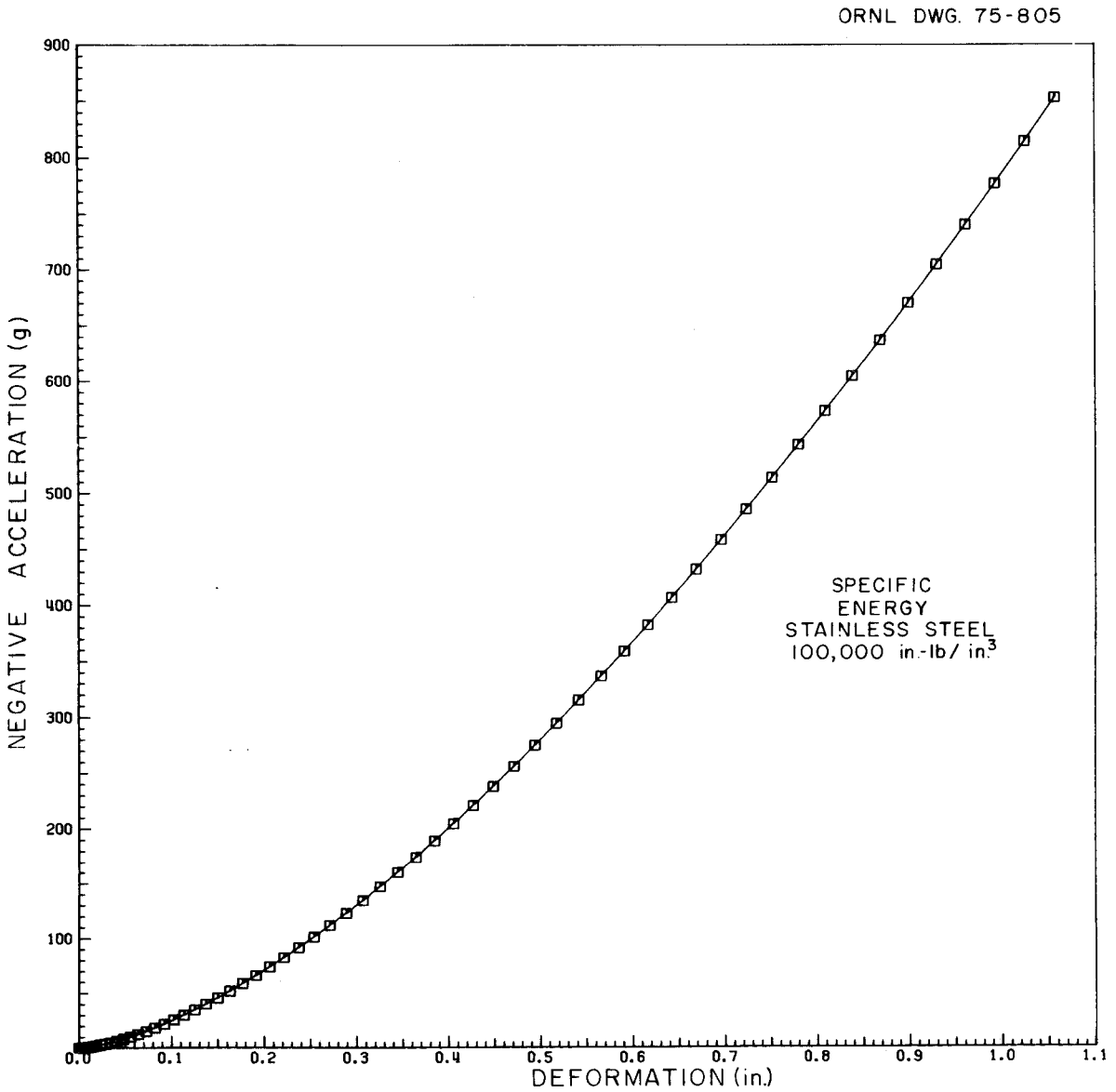


Fig. 11.4 Plot of negative acceleration vs deformation at specific energy of 100,000 in.-lb/ in.$^3$ for stainless steel shipping container during a 30-ft side drop.

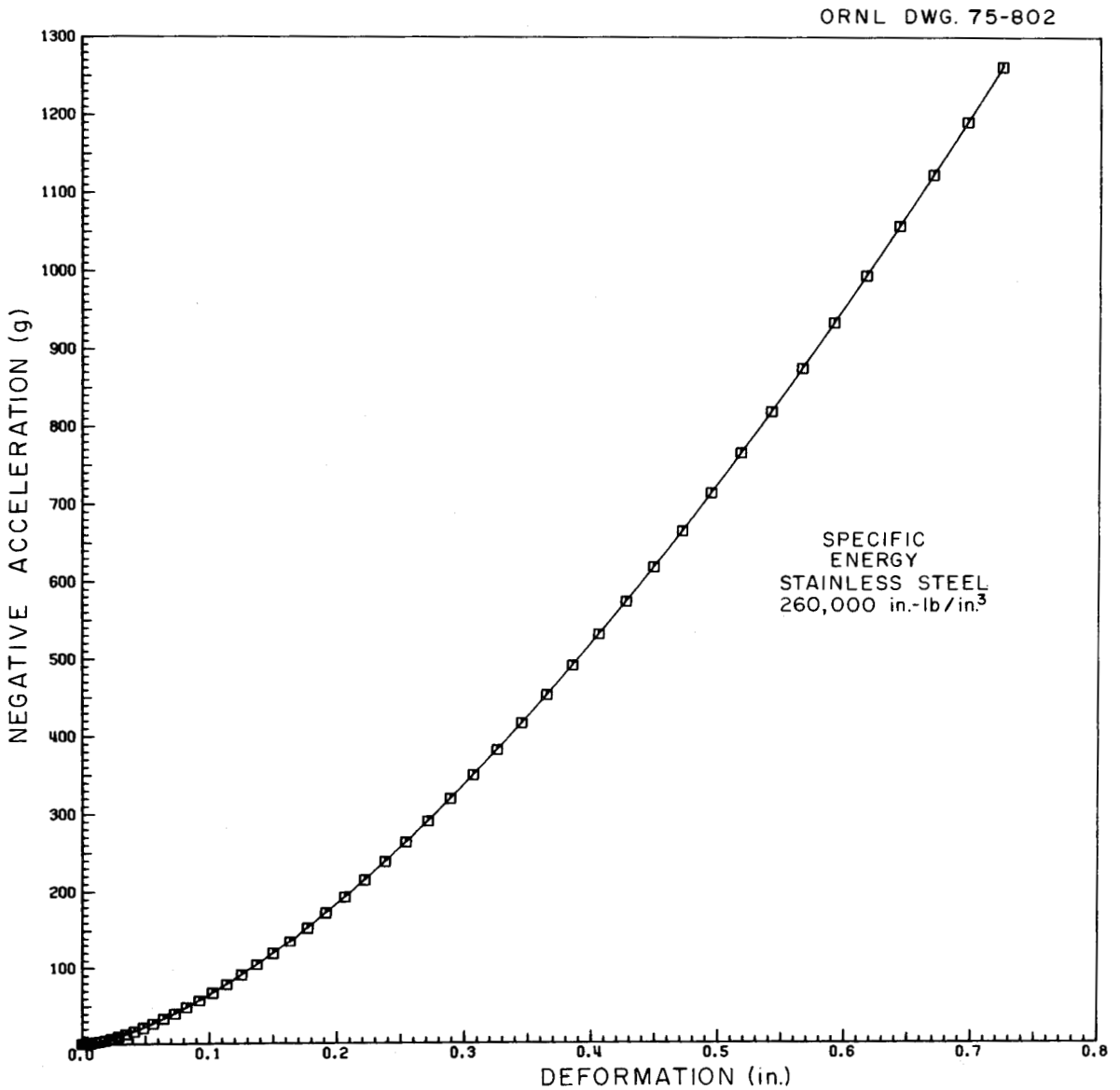


Fig. 11.5 Plot of negative acceleration vs deformation at specific energy of 260,000 in.-lb/in$^3$ for stainless steel shipping container during a 30-ft side drop.

## 11.5 Appendix E: Inspection of ORNL Shipping Cask D-38 to Verify Integrity of Fabrication

# INTRA-LABORATORY CORRESPONDENCE

OAK RIDGE NATIONAL LABORATORY

November 16, 1973

TO: B. B. Klima

SUBJECT: Inspection of Shipping Cask D-38
W.O. A-3044C-AA - Inspection Request 10926

This inspection was performed to verify the integrity of this shipping cask.

After disassembly, the cask was surveyed by ORNL Health Physics and found to be free of radioactive contamination.

Visual Inspection

This cask conforms to the characteristics of Drawing M-12133-CD-126-E Rev. 9.

No structural defects were observed in the cask, cover shroud or shipping pallet.

Wall thickness readings of the outer shell (part #8) revealed a thickness of .385" - .428".

The cask is identified on the shroud and top plug by stamped lettering.

Liquid Penetrant Examination

All accessible welds and the lifting attachments were examined with liquid penetrant in accordance with ORNL NDE 30, Technique 1, "Color Contrast Solvent-removable", and were found to be satisfactory.

Leak Test

The cask was helium leak tested in accordance with the Inspection Engineering Manual, Section 7, App. 4. This test indicated a leak rate not greater than $1 \times 10^{6}$ scc/sec. (Leak test report is attached).[a]

[a] Leak Test Report in Quality Assurance file in Room A-16, Bldg. 4500N, ORNL

Metal Identification

All accessible parts of the cask were examined with a thermoelectric comparator and determined to have been fabricated from 300 series stainless steel. (Instrument calibration data and test results are attached.)[a]

These inspections and tests indicate good quality welds and material. It is our opinion that the integrity of this cask is good.

INSPECTION ENGINEERING DEPT.

O. J. Smith

O. J. Smith

OJS:bc

Attachments

cc: J. R. McGuffey
J. N. Robinson
C. R. Starlin
IR-10926

[a]Available in Quality Assurance file, Room A-16, Bldg. 4500N, ORNL.

## 11.6 Appendix F: Operating and Inspection Procedures


| | Page |
|---|---|
| Inspection Check List | 110 |
| Operating Procedure - Incoming Shipments | 112 |
| Operating Procedure - Outgoing Shipments | 114 |

ORNL SHIPPING CASK D-38
DOT APPROVED 5787
ORNL DWG. NO. M12133-CD-126-D

Inspection Check List

Inspection Type

Routine_____

Biennial_____

| | Date | Time | By | |
|---|---|---|---|---|
| 1. | _____ | _____ | _____ | General condition of cask checked.<br>Remarks:_____<br>_____<br>_____<br>_____<br>_____ |
| 2. | _____ | _____ | _____ | Inner cavity plug flange gasket, condition:<br>_____good _____replaced<br>_____poor |
| 3. | _____ | _____ | _____ | Drain plug "O" ring gaskets, condition:<br>_____good _____replaced<br>_____poor |
| 4. | _____ | _____ | _____ | Inner cavity plug flange gasket, sealing surface condition:<br>_____good _____reworked<br>_____needs reworking _____cleaned<br>_____needs cleaning |
| 5. | _____ | _____ | _____ | Nuts, condition:<br>_____good<br>_____replaced |
| 6. | _____ | _____ | _____ | Studs, condition:<br>_____good<br>_____replaced |
| 7. | _____ | _____ | _____ | Locating pins, condition:<br>_____good<br>_____replaced |
| 8. | _____ | _____ | _____ | Safety wire holes are free:<br>_____Yes _____Cleaned<br>_____Needs Cleaning |

Inspection Check List
(Continued)

Inspection Type

Routine_____

Biennial_____

| Date | Time | By | |
|---|---|---|---|
| 9._____ | _____ | _____ | Visually inspect welds (Biennial only). |
| 10._____ | _____ | _____ | Fire shield all welds secure (dye penetrant test) (biennial only) |
| 11._____ | _____ | _____ | Fire Shield Wooden Block<br>Intact_____ Should be replaced_____<br>Replaced_____ |
| 12._____ | _____ | _____ | Skid Lifting loops and welds (dye penetrant) (biennial only) |

_____

Cask ready for shipment Date

Date_____

File in Room A-16

Building 4500N

OPERATING PROCEDURE, D-38 CASK

NRC-OR-USA 5787/BLF

INCOMING SHIPMENTS — Initials

1. Fire Shield and Skid checked for leakage and damage. _____

2. Tamper wire inspected for damage. _____

3. Fire Shield removed. _____

4. Cask visually checked for leakage and damage. _____

5. Exterior of cask and skid probed and smeared by Health Physics for radiation and/or contamination. _____

6. Radiation data on cask and skid exteriors: _____

| | Contact | 3 ft. |
|---|---|---|
| Alpha | _____ | |
| Beta/Gamma | _____ | _____ |
| Neutron | _____ | _____ |

7. Radiation data on lid (outside top): _____

| | Contact | 3 ft. |
|---|---|---|
| Alpha | _____ | |
| Beta/Gamma | _____ | _____ |
| Neutron | _____ | _____ |

Steps 8-10 applicable only to cask which was loaded under water.

8. Drain plug removed. Water drained from inner cavity. _____

9. Drain plug "O" ring condition:

OK_____ Replaced_____ _____

10. Drain plug replaced. _____

NRC-OR-USA-5787-BLF
Page 2 of 2

INCOMING SHIPMENTS | Initials

11. Cask removed from skid and moved to Hot Cell area. _____

12. Lid bolts removed. Lid-lifting device attached. _____

13. Outside of cask masked or bagged with plastic or paper to protect cask from contamination. _____

14. Cask moved into Hot Cell (if necessary), lid raised, and contents removed. _____

15. Lid replaced, cask removed from Hot Cell and checked for radioactive contamination. _____

16. Radiation data on cask:

| | Contact | 3 ft. |
|---|---|---|
| Alpha | _____ | |
| Beta/Gamma | _____ | _____ |
| Neutron | _____ | _____ |

17. Cask and lid decontaminated to within established shipping tolerances. Survey tag attached to cask. _____

18. Radiation data on cask and lid:

| | Contact | 3 ft. |
|---|---|---|
| Alpha | _____ | |
| Beta/Gamma | _____ | _____ |
| Neutron | _____ | _____ |

19. Gaskets on lid and drain plug inspected. _____
Gasket condition:
Lid OK_____ Replaced_____

20. Cask, and protective cover reassembled, placed on the skid. _____

21. Fire shield placed over cask and moved to storage area. _____

Above Information Certified By: Date:

_____ _____

Date_____

File in Room A-16

Page 1 of 2

Building 4500N

OPERATING PROCEDURE, D-38 CASK

NRC-OR-USA 5787/BLF

OUTGOING SHIPMENTS — Initials

1. Depleted uranium metal biological shielding adequate for quantity of radioactive material to be shipped. _____

2. Cask moved to loading area, opened, and gasket inspected. Gasket condition:

   Lid OK_____ Replaced_____ _____

3. Cask body and lid covered with plastic or paper to minimize radioactive contamination. _____

4. Inner container gasket (silicone rubber) condition:

   Material_____ OK_____ Replaced_____ _____

5. Radioactive material to be shipped placed into Specification 2R container (or approved equivalent). Concentrated heat sources must be placed in heat sink. Exterior of container has been decontaminated. _____

6. Inner container properly sealed (bolts or lid tightened as appropriate). _____

7. Radiation data on inner container: _____

| | Contact | 3 ft. |
|---|---|---|
| Alpha | _____ | |
| Beta/Gamma | _____ | _____ |
| Neutron | _____ | _____ |

8. Inner container loaded into cask. Cask gasket in place. Lid replaced. _____

9. Cask removed from loading area. Lid lifting device removed. _____

10. If loaded under water, drain plug removed. Water drained from inner cavity. Drain plug replaced. _____

11. Lid and cask decontaminated to the established tolerances for off-site shipment. _____

OUTGOING SHIPMENTS | Initials

12. Radiation data on loaded cask: _____

| | Contact | 3 ft. |
|---|---|---|
| Alpha | _____ | |
| Beta/Gamma | _____ | _____ |
| Neutron | _____ | _____ |

13. Cover nuts replaced and tightened to 30 in. lb. _____

14. Tamper seals attached through predrilled nuts and studs. _____

15. Cask placed on skid. Four 1 in. diam. nuts tightened. _____

16. Health Physics smeared and probed cask. _____

| | Contact |
|---|---|
| Alpha | _____ |
| Beta/Gamma | _____ |

17. Fire Shield replaced and attached to studs with nuts. _____

18. Health Physics smeared and probed fire shield. _____

19. Riggers called to move cask. _____

Cask certified ready for shipment by: _____ Date: _____

## 11.7 Appendix G: The Evaluation of Stress in a Curved Beam

For a symmetrical curved bar loaded in the plane of symmetry:

$$\sigma_S = \frac{M_Z\, y}{J_Z\,[1-(y/R)]} - \frac{M_Z}{AR} \tag{11-12}$$

where

$\sigma_s$ = stress normal to a cross section of the beam.

A = the cross-sectional area of the beam,

$M_z$ = applied moment normal to plane of symmetry,

R = radius of curvature of centroid of cross section,

y = position on cross section measured from centroid toward center of curvature.

and

$$J_Z = \int_A \frac{y^2}{1-(y/R)}\, dA$$

Equation G-1 was derived from the equilibrium of an infinitesimal length of beam. Plane sections were assumed to remain plane after deformation. It was also assumed that curvature does not vary rapidly and that the normal stress is independent of the other stress values.

Under similar assumptions, the radial stress can be shown to be

$$\sigma_y = \frac{M_Z}{b(R-y)}\left(\frac{\bar{Q}_Z}{J_Z} - \frac{A'}{RA}\right) \tag{11-13}$$

where

b = the width of the cross section at y,

A' = the area of the cross section bounded by the line at y, and

and

$$\bar{Q}_Z = \int_{A'} \frac{y\,dA}{1-(y/R)}$$

The average shear stress at a line at distance y from the centroid is

$$\tau_{ys} = \frac{V_y}{b[1-(y/R)]}\left(\frac{\overline{Q}_Z}{J_Z} - \frac{A'}{RA}\right) \tag{11-14}$$

where

$V_y$ = the shear force in the plane of symmetry.

In order to calculate stresses from these equations, the beam must be defined.

For a rectangular cross section of width b and section depth h, we have

$$J_Z = \int_{-h/2}^{h/2} \frac{y^2 b dy}{1-(y/R)} = -R^2 bh - R^3 b \ln \frac{2R-h}{2R+h} \tag{11-15}$$

$$\begin{aligned} Q_Z &= -R\int_{A'} dA + R\int_{A'} \frac{dA}{1-(y/R)} \\ &= -R\int_{-h/2}^{y} b\, d\eta + R\int_{-h/2}^{y} \frac{b d\eta}{1-(\eta/R)} \\ &= -Rb\left(\frac{h}{2} - y\right) + R^2 b \ln \frac{R-y}{R-(h/2)} \end{aligned} \tag{11-16}$$

and

$$\frac{A'}{A} = \frac{1}{2}\left(1 - \frac{2y}{h}\right)$$

These equations were programmed for the HP-97 calculator. The program accepts section properties (b, h, R), then for each position y inserted, the normal stress, the radial stress, and the shear stress are calculated. This program has demonstrated the ability to duplicate the stress intensification factors found in Roark and Young, *Formulas for Stress and Strain*, Fifth edition, Example 1, Table 16, p. 210 for normal stress. The program also was verified by duplicating examples in the source reference by Oden.

For a circular cross section of radius a, the pertinent quantities $J_z$, $Q_z$, and A'/A become

$$J_Z = t2R^2\left(R^2 - \frac{a_2}{2}\right) + 4R^3 \left(\frac{}{R^2 - a^2}\right)^{1/2} \text{arc tan} \frac{-R - a}{(R^2 - a^2)^{1/2}} - \text{arc tan} \frac{R - a}{R^2 - a^2} \tag{11-17}$$

$$\begin{aligned} Q_Z = {} & 2R \Big[ a(R + y/2) \cos(\text{arc sin } y/a) \\ & + (R^2 - a^2/2)(\pi/2 - \text{arc sin } y/a) \\ & + 2R\, R^2 - a^2 \left[ \text{arc tan} \frac{R \tan\left(\frac{\text{arc sin } y/a}{2}\right) - a}{(R^2 - a^2)^{1/2}} - \text{arc tan} \frac{R - a}{(R^2 - a^2)^2} \right] \end{aligned} \tag{11-18}$$

and

$$A^1/A = \frac{\delta - \sin\delta \cos\delta}{\pi} ,$$

The program dealing with circular cross sections was checked and was found to duplicate results found in Example 2 in the above cited table in Roark and Young.

## 12. REFERENCES


1. J. H. Evans, *Analysis of the Oak Ridge National Laboratory Shipping Cask D-38*, ORNL/TM-2220 (October 1968).

2. *Code of Federal Regulations*, Title 10, Part 71.

3. *DOE Manual*, Chapter 0529, June 14, 1973.

4. *Code of Federal Regulations*, Title 49, Part 173.

5. *Code of Federal Regulations*, Title 49, Part 173, Paragraph 173.393(j).

6. R. A. Johnston, "Alloying of Uranium and Stainless Steel in Uranium Shielded Casks," p. 11 in *Paducah Plant Laboratory Progress Report, January-June 1966*, KY-L-419, Part I (Sept. 27, 1966).

7. A. N. Holden, *Physical Metallurgy of Uranium*, Addison-Wesley, Reading, MS, 1958.

8. *Paducah Plant Laboratory Progress Report, January-June 1968*, KY-L-469, Part 1 (Dec. 2, 1968).

9. H. R. Clauser (ed.), Mater. Design Eng. (Materials Selector Issue) *554*(5), (Mid-October 1961).

10. C. A. Hampel (ed.), *Rare Metals Handbook*, 2nd ed., Reinhold, New York, 1961.

11. R. C. Johnson, *Optimum Design of Mechanical Elements*, Wiley, New York, 1961.

12. J. T. Oden, *Mechanics of Elastic Structures*, McGraw-Hill, 1967, Eqs. (4.24), (4.29), and (5.4).

13. R. J. Roark and W. C. Young, *Formulas for Stress and Strain*, 5th ed., p. 93, McGraw-Hill Book Company, New York, 1975.

14. T. Baumeister (ed.), *Mark's Standard Handbook for Mechanical Engineers*, 8th ed., McGraw-Hill, New York, 1978, pp. 8-10.

15. ASME Boiler and Pressure Vessel Code, *Section VIII, Rules for Construction of Vessels*, Division I, American Society of Mechanical Engineers, New York, New York, 1974.

16. *Code of Federal Regulations*, Title 49, Part 173, Paragraph 173.393 (e)(2).

17. E. Oberg and F. D. Jones, *Machinery's Handbook*, 16th ed., p. 1110, Industrial Press, NY, 1959.

18. M. F. Spotts, *Design of Machine Elements*, 2nd ed., p. 459, Prentice-Hall, London, 1954.

19. W. D. Turner and Siman-Tov, *HEATING-3, An IBM 360 Heat Conduction Program*, ORNL/TM-3208 (February 1971).

20. *Seal Compound Manual*, Catalog C5702, Parker Seal Company, Cleveland, Ohio (April 1971).

21. J. H. Evans, K. K. Chipley, H. A. Nelms, W. K. Crowley, and R. A. Just, *Safety Analysis Report for Packaging (SARP): The ORNL Loop Transport Cask*, p. 106, (Sect. 8), ORNL/ENG/TM-11, Nov. 1977.

22. *Code of Federal Regulations*, Title 49, Part 178.34.

23. J. A. Boulet, J. H. Evans, K. K. Chipley, *Safety Analysis Reprot for Packaging (SARP): The ORNL Uranium-Shielded Shipping Cask*, p. 9, (Sect. 1.3.1), ORNL/ENG/TM-4, Nov. 1977.

ORNL-5406/R1
Dist. Category UC-71

## INTERNAL DISTRIBUTION

1. G. A. Aramayo
2. W. D. Box
3. R. E. Brooksbank
4. G. H. Burger
5. H. C. Claiborne
6. R. L. Clark
7. E. D. Collins
8. J. H. Evans
9. D. E. Ferguson
10-14. J. H. Goode
15. R. F. Hibbs
16. E. M. King
17. L. J. King
18. A. P. Malinauskas
19. F. H. Neill
20. J. R. Parrott
21. H. Postma
22. M. E. Ramsey
23. J. N. Robinson
24. J. B. Ruch
25. R. W. Schaich
26. R. D. Seagren
27. C. H. Shappert
28. L. B. Shappert
29. D. K. Tedder
30. W. E. Terry
31. D. B. Trauger
32. V. C. A. Vaughen
33. J. W. Wachter
34. C. D. Watson
35. R. G. Wymer
36-37. Central Research Library
38. Document Reference Section
39-43. Laboratory Records
44. Laboratory Records, RC
45. ORNL Patent Office
46. G. R. Chopin (Consultant)
47. E. J. Colby, Jr. (Consultant)
48. E. L. Gaden, Jr. (Consultant)
49. L. E. Swabb, Jr. (Consultant)
50. K. D. Timmerhaus (Consultant)

## EXTERNAL DISTRIBUTION

51. E. W. Bailey, DOE, Oak Ridge Operations Office, P.O. Box E, Oak Ridge, Tennessee 37830

52. E. L. Barraclough, DOE, Albuquerque Operations Office, P.O. Box 5400, Albuquerque, New Mexico 87115

53. L. G. Blalock, DOE, Oak Ridge Operations Office, P.O. Box E, Oak Ridge, Tennessee

54. C. L. Brown, Pacific Northwest Laboratory, P.O. Box 999, Richland, Washington 99352

55. R. B. Chitwood, DOE, Division of Fuel Storage and Transfer, Washington, DC 20545

56. H. M. Culver, DOE, Oak Ridge Operations Office, P.O. Box E, Oak Ridge, Tennessee 37830

57. R. I. Elder, Chicago Operations Office, 9800 South Cass Avenue, Argonne, Illinois 60439

58. J. M. Freedman, Sandia Laboratories, P.O. Box 5800, Albuquerque, New Mexico 87185

59. R. E. Harris, DOE, Oak Ridge Operations Office, P.O. Box E, Oak Ridge, Tennessee 37830

60. B. B. Klima, Roane State Community College, Harriman, Tennessee 37748

61. W. G. O'Quinn, DOE, Savannah River Operations Office, P.O. Box A, Aiken, South Carolina 29801

62. D. E. Patterson, DOE, Division of Operational and Environmental Safety, Washington, DC 20545

63. R. W. Peterson, Battelle, Columbus Laboratories, Office of Nuclear Waste Isolation, 505 King Avenue, Columbus, Ohio 43201

64. W. A. Pryor, DOE, Oak Ridge Operations Office, P.O. Box E, Oak Ridge, Tennessee 37830

65. R. R. Rawl, Materials Transportation Bureau, U.S. Department of Transportation, 6th and D Street SW, Washington, DC 20545

66. J. A. Sisler, DOE, Division of Fuel Storage and Transfer, Washington, DC 20545

67. D. R. Smith, Los Alamos Scientific Laboratory, P.O. Box 1663, Los Alamos, New Mexico 87544

68. F. R. Standerfer, DOE, Richland Operations Office, P.O. Box 550, Richland, Washington 99352

69. L. L. Turner, DOE, Savannah River Operations Office, P.O. Box A, Aiken, South Carolina 29801

70. Nuclear Research and Development Division, DOE, Oak Ridge Operations, P.O. Box E, Oak Ridge, Tennessee 37830

71-85. Safety and Health Protection Branch, DOE, Oak Ridge Operations Office, P.O. Box E, Oak Ridge, Tennessee 37830

86. Office of Assistant Manager, Energy Research and Development, DOE, Oak Ridge Operations Office, P.O. Box E, Oak Ridge, Tennessee 37830

87–257. Given distribution as shown in TID-4500 under Category UC-71 — Transportation of Property and Nuclear Materials.

☆U.S. GOVERNMENT PRINTING OFFICE: 1979-640-079-189