OAK RIDGE NATIONAL LABORATORY LIBRARIES
3 4456 0551638 6

ORNL/TM-6625

Process Options and Projected Mass Flows for the HTGR Refabrication Scrap Recovery System

S. M. Tiegs

OAK RIDGE NATIONAL LABORATORY
CENTRAL RESEARCH LIBRARY
CIRCULATION SECTION
4500N ROOM 175
LIBRARY LOAN COPY
DO NOT TRANSFER TO ANOTHER PERSON
If you wish someone else to see this report, send in name with report and the library will arrange a loan.

OAK RIDGE NATIONAL LABORATORY
OPERATED BY UNION CARBIDE CORPORATION · FOR THE DEPARTMENT OF ENERGY

Available from
National Technical Information Service
U.S. Department of Commerce
5285 Port Royal Road, Springfield, Virginia 22161

ORNL/TM-6625
Distribution
Category UC-77

Contract No. W-7405-eng-26
METALS AND CERAMICS DIVISION

HTGR Fuel Recycle Development Program (189a OH045)
Fuel Refabrication — Task 500

PROCESS OPTIONS AND PROJECTED MASS FLOWS FOR THE HTGR REFABRICATION SCRAP RECOVERY SYSTEM

S. M. Tiegs

Date Published: March 1979

NOTICE This document contains information of a preliminary nature. It is subject to revision or correction and therefore does not represent a final report.

OAK RIDGE NATIONAL LABORATORY
Oak Ridge, Tennessee 37830
operated by
UNION CARBIDE CORPORATION
for the
DEPARTMENT OF ENERGY

OAK RIDGE NATIONAL LABORATORY LIBRARIES

3 4456 0551638 6

CONTENTS

	Page
ABSTRACT	1
INTRODUCTION	2
SCRAP PRODUCTION ESTIMATES	4
SCRAP RECOVERY OPTIONS	6
Particles without SiC Coatings	8
Particles with SiC Coatings	11
Green Fuel Rods	15
Fuel Elements	18
Furnace Parts	20
Perchloroethylene Distillation Bottoms	24
Analytical Samples	27
REFERENCE SCRAP RECOVERY SYSTEM	29
SCRAP MASS FLOWS	29
SUMMARY	30
ACKNOWLEDGMENTS	33
REFERENCES	33

PROCESS OPTIONS AND PROJECTED MASS FLOWS FOR THE HTGR REFABRICATION SCRAP RECOVERY SYSTEM

S. M. Tiegs

ABSTRACT

To define reference processes for recovery of scrap fuel material generated during high-temperature gas-cooled reactor (HTGR) fuel refabrication, a detailed review of processing options was made. The quantity of scrap material that will be generated is currently estimated to be large, and, therefore, scrap recovery is justified by the high value of the fissile uranium contained in the rejected material. After selecting the reference processes, mass flows were calculated for the scrap recovery system.

The two major uranium recovery processing options reviewed are (1) internal recovery of the scrap by the refabrication system and (2) transfer to and external recovery of the scrap by the head end of the reprocessing system. Each option was reviewed with respect to equipment requirements, preparatory processing, and material accountability. Because there may be a high cost factor on transfer of scrap fuel material to the reprocessing system for recovery, all of the scrap streams will be recycled internally within the refabrication system, with the exception of reject fuel elements, which will be transferred to the head end of the reprocessing system for uranium recovery.

The refabrication facility will have be fully remote; thus, simple recovery techniques were selected as the reference processes for scrap recovery. Crushing, burning, and leaching methods will be used to recover uranium from the HTGR refabrication scrap fuel forms, which include particles without silicon carbide coatings, particles with silicon carbide coatings, uncarbonized fuel rods, carbon furnace parts, perchloroethylene distillation bottoms, and analytical sample remnants.

Mass flows through the reference scrap recovery system were calculated for the HTGR reference recycle facility operating with the highly enriched uranium fuel cycle. Output per day from the refabrication scrap recovery system is estimated to be 4.02 kg of ^{235}U and 10.85 kg of ^{233}U. Maximum equipment capacities were determined, and future work will be directed toward the development and costing of the scrap recovery system chosen as reference.

INTRODUCTION

Refabrication is that portion of the high-temperature gas-cooled reactor (HTGR) fuel cycle in which uranium, recovered from spent fuel elements by a reprocessing plant, is fabricated into fuel and incorporated into recycle fuel elements.[1] Two types of uranium will be processed in the refabrication system — the residual ^{235}U recovered from the fissile particles in spent fresh-fuel elements and the ^{233}U bred from the ^{232}Th in the fertile particles. The refabrication of HTGR fuel elements will require a shielded facility because of the radioactivity associated with the bred ^{233}U fissile material. The processes and mass flows included in this report are based on the highly enriched uranium (HEU) fuel cycle.

The steps involved in the refabrication process are shown in Fig. 1. The uranium recovered by the reprocessing system is received as a uranyl nitrate solution and is converted to an acid-deficient uranyl nitrate solution. The uranyl ions are loaded onto ion-exchange resin microspheres, which are then dried, carbonized, and converted to uranium oxycarbide kernels. In a fluidized-bed coating furnace, the kernels are coated with multiple layers of pyrolytic carbon and silicon carbide. First, a porous carbon buffer coating is applied; then, an inner low-temperature isotropic (ILTI) carbon coating, a silicon carbide coating, and an outer low-temperature isotropic (OLTI) carbon coating are applied. These fissile microspheres are blended with pyrolytic carbon-coated thoria (ThO_2) microspheres, which are obtained from a fresh-fuel fabrication plant, and bonded into fuel rods with graphite shim particles and a pitch matrix. The fuel rods are loaded into hexagonal graphite fuel blocks that are then heated to carbonize and anneal the fuel rods. The finished fuel elements are stored until they are aready to be shipped to an operating HTGR.

At each processing step in the refabrication system, the fuel material is sampled and evaluated, and rejected material is routed to the scrap recovery system. The variety of fuel forms that may comprise the feed streams to scrap recovery are shown in Fig. 2. These include particles with and particles without SiC coatings, green (uncarbonized) fuel

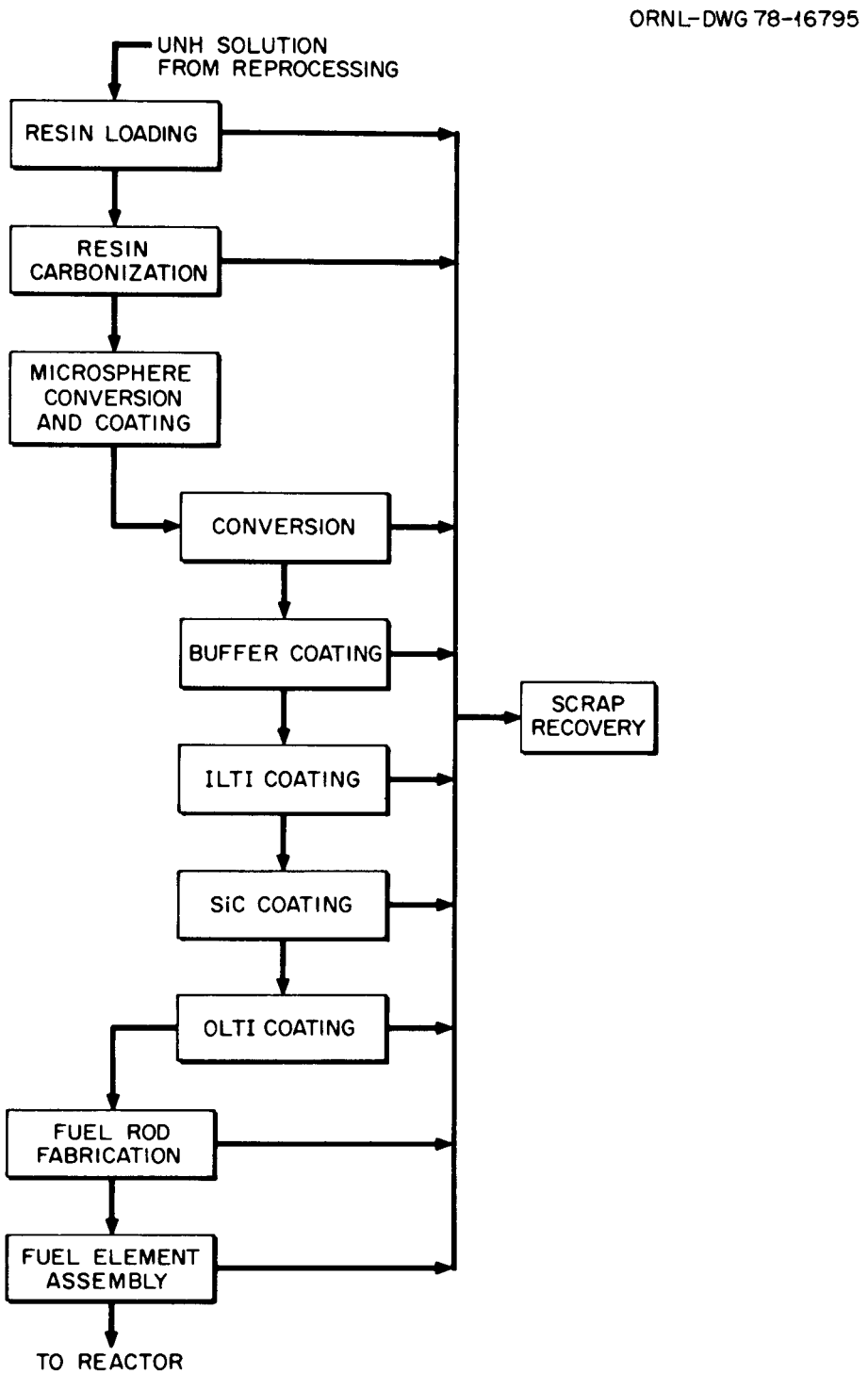

Fig. 1. HTGR refabrication process with scrap recovery feed streams.

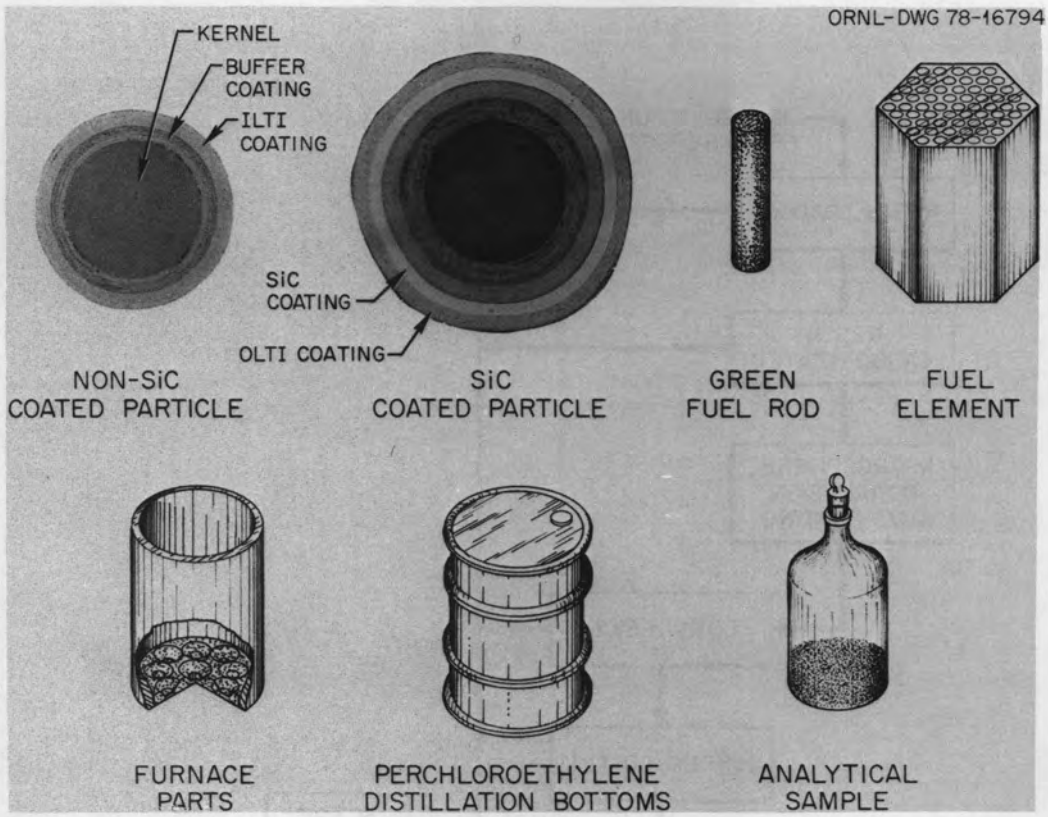

Fig. 2. Scrap fuel forms.

rods, fuel elements, furnace parts, perchloroethylene distillation bottoms, and analytical samples. Scrap recovery is justified by the high value of the fissile uranium in the rejected material. This report gives current estimates for scrap generation and presents a detailed review of the alternate processing schemes for uranium recovery from each of the scrap fuel forms. A reference scrap recovery flowsheet was selected, and mass flows through the reference system calculated for the HTGR Reference Recycle Facility (HRRF) are presented.

SCRAP PRODUCTION ESTIMATES

During refabrication of HTGR fuel, uranium-bearing material is removed from the process mainstream at various points. Table 1 details the sources and current estimated percentages of uranium leaving the refabrication mainstream.[2] The percent of total uranium product contained in

Table 1. Estimated percentages of uranium throughput removed

Process step	Percent of throughput removed
Material receiving	0.000
Acid-deficient uranyl nitrate (ADUN) preparation and resin loading	
Sample of uranyl nitrate shipment	0.002
Sample of uranyl nitrate feed	0.030
Sample of uranium contactors and ADUN surge	0.068
Liquid waste from ADUN preparation	0.040
Probability of bad batch of prepared ADUN	1.000
Sample of dried loaded resin	0.030
Carbonization	
Reject loaded resin on basis of size	1.000
Reject loaded resin on basis of shape	1.000
Sample of loaded-resin batch	0.100
Bad loaded-resin batch reject probability	5.000
Sample of loaded-resin lot	0.100
Bad loaded-resin lot reject probability	0.100
Loss during carbonization to perchloroethylene ("perc")	1.000
Sample of carbonized resin	0.100
Bad carbonized-resin lot reject probability	5.000
Conversion and coating	
Loss during conversion to furnace parts and perc scrubber	0.100
Oversize from screen following conversion	0.100
Sample of converted kernels	0.100
Loss during buffer coating to furnace parts and perc scrubber	0.100
Oversize from screen following buffer coating	0.100
Sample of buffer-coated particles	0.100
Bad conversion batch reject probability	2.000
Loss during ILTI coating to furnace parts and perc scrubber	0.100
Oversize from screen following ILTI coating	0.100
Sample of ILTI-coated particles	0.100
Bad buffer-coated particle batch reject probability	2.000
Loss during SiC coating to furnace parts and perc scrubber	0.100
Oversize from screen following SiC coating	0.100
Sample of SiC-coated particles	0.100
Bad ILTI-coated particle batch reject probability	2.000
Loss during OLTI coating to furnace parts and perc scrubber	0.100
Oversize from screen following OLTI coating	0.100
Sample of OLTI-coated particles	0.100
Bad SiC-coated particle batch reject probability	2.000
Bad OLTI-coated particle batch reject probability	2.000
Reject OLTI-coated particles on basis of size	3.000
Sample from OLTI-coated particle lot	0.100
Bad OLTI-coated particle lot reject probability	5.000
Fuel rod fabrication	
Loss during mold loading	0.100
Reject rods on basis of length	0.300
Reject rods due to inhomogeneity or lack of integrity	0.100
Sample of green fuel rods	0.030
Fuel element assembly	
Sample from carbonized block	0.440
Probability of reject block on basis of integrity check	0.250
Probability of reject block on basis of second integrity check	0.250

each scrap material form is shown in Table 2. Following analysis, sample material will be returned to the scrap system for uranium recovery. As indicated, the scrap from refabrication comprises ∿40% of the total uranium in the end product. These removal rates are based on conservative engineering estimates and may actually be somewhat lower. Bad batch and bad lot probabilities are included in the OLTI particle rejection estimate. The quantity of scrap within each stream may differ somewhat; for example, the amount of rejected uncarbonized resin may be lower, while the quantity of scrap green (uncarbonized) fuel rods may be higher. However, from fresh-fuel scrap recovery experience,[3] the total scrap generation estimate appears to be reasonable.

SCRAP RECOVERY OPTIONS

The two major uranium recovery processing options are (1) internal recovery of the scrap by the refabrication system and (2) transfer to and

Table 2. Scrap production estimates

	Percent of total uranium product		
	Scrap	Samples	Total
Scrap fuel form			
Uranyl nitrate	1.43	0.14	1.58
Uncarbonized resin	9.90	0.31	10.22
Carbonized resin	6.52	0.13	6.65
Converted resin		0.12	0.12
Buffer-coated particles	2.46	0.12	2.58
ILTI-coated particles	2.41	0.12	2.53
SiC-coated particles	2.35	0.12	2.46
OLTI-coated particles	13.19	0.22	13.41
Green fuel rods	0.50	0.03	0.53
Fuel elements	0.50	0.45	0.95
Subtotal	39.27	1.77	41.04
Material form			
Furnace parts			0.90
Perchloroethylene distillation bottoms			1.62
		Subtotal	2.52
		Total	43.56

external recovery of the scrap by the reprocessing system. The advantages and disadvantages of these two alternate uranium recovery schemes are discussed in the following paragraphs.

For internal recovery of scrap, the refabrication system would require an entire scrap recovery system similar to the head end of the reprocessing system. This would necessitate the duplication of many pieces of head-end equipment such as crushers, burners, leachers, and particle crackers.

Routing the scrap to the head end of the reprocessing system for recovery, however, has several disadvantages. Before the uranium-bearing scrap can be transferred, it must be assayed to comply with special nuclear material (SNM) control requirements.[4] No assay technique exists to satisfy this requirement over the range of scrap forms — from uncarbonized resin to used furnace parts with fuel particles sticking to the bulk graphite. Working with uranium in solution would greatly simplify this accountability problem. The refabrication scrap may have to be reduced to a solution before strict accountability can be satisfied. The accountability situation will depend on the defined balance areas and the assay accuracy required. Both accountability and associated safeguard requirements may impose a high cost factor on transferring material to the reprocessing system. Routing the scrap from refabrication to the reprocessing system for recovery may also complicate the batching of uranium from different utilities, and a system cleanout may be necessary between uranium campaigns.

Another disadvantage of head-end recovery of scrap material is that the reprocessing system has no provisions for handling certain forms of refabrication scrap, such as uncarbonized resin and green fuel rods. Green (uncarbonized) fuel rods contain ∿10% volatiles, which may complicate the off-gas cleanup systems of the reprocessing burners. The green rods may also cause sticking problems in the crusher mechanisms. Consequently, the refabrication system would be required to carbonize the scrap green fuel rods and scrap uncarbonized resin for acceptance by the head end of the reprocessing system. Additional processing before transfer would also be required to protect scrap uncoated and buffer-coated carbonized particles from contact with air since they are pyrophoric. Because the scrap from refabrication contains almost no fission products,

problems caused by dilution of the reprocessing streams will require consideration, especially for concentration-dependent processes. For example, the efficiency of the head-end off-gas cleanup systems (including iodine, tritium, and krypton removal) may be affected by dilution from the processing of refabrication scrap that does not contain these fission products. Even if dilution were not a major problem, the cost of a head-end off-gas system of larger capacity would have to be balanced against a separate scrap recovery system with much simpler off-gas requirements. Also, carbon dioxide solidification costs would increase because the burning of refabrication scrap, even though it contains no ^{14}C, would generate more CO_2. The lack of fission products in the scrap from refabrication could also affect criticality considerations in the reprocessing system. However, the head end is designed to accept fuel elements with very low burnups; thus, criticality would probably not be a problem.

The high value of the fissile uranium puts emphasis on quick scrap recovery to minimize inventory charges. An internal refabrication scrap recovery system may be the more expedient option. By incorporating a small solvent extraction unit within the scrap system, the recovered uranium, with minimal cleanup, could be returned directly to the refabrication system.

In the following sections, the alternate processing options for each of the scrap material forms will be reviewed in detail, and a reference scrap recovery flowsheet will be defined. Because the refabrication facility will have to be fully remote, simple or already proven techniques are preferred. The reference flowsheet selection was made, pending further definition of actual scrap generation and equipment costing. While the final choice must be technically feasible, it will depend on economic considerations.

Particles without SiC Coatings

Particle types that may be rejected before the SiC coating process include uncarbonized resin, carbonized resin, converted resin, buffer-coated particles, and ILTI-coated particles. Three options for uranium recovery from scrap particles without SiC coatings are shown in Fig. 3.

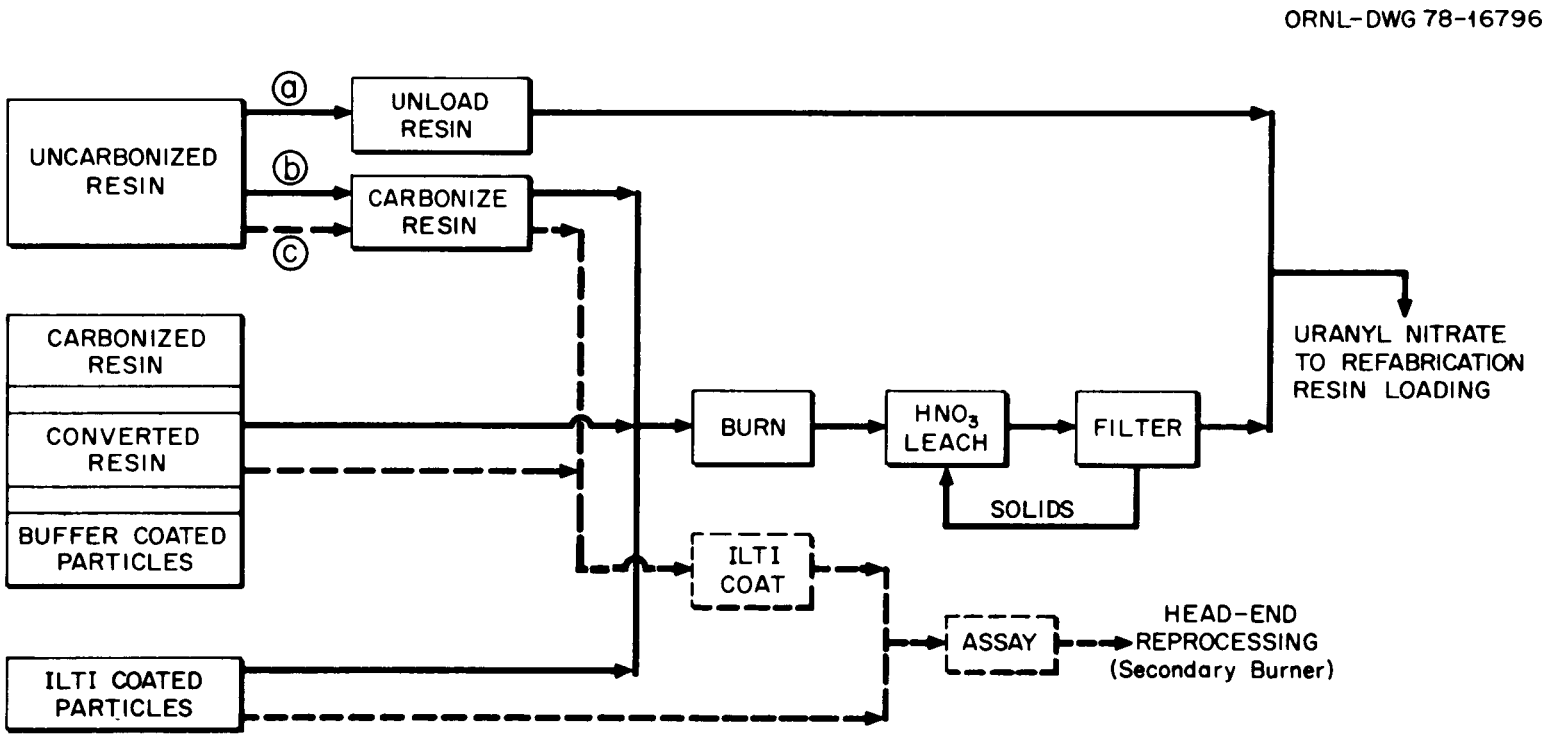

Fig. 3. Three options [(a) through (c)] for recovery of scrap particles without SiC coatings.

Options (a) and (b) involve uranium recovery by a refabrication scrap recovery system. Recovery of particles without SiC coatings by the reprocessing system is shown in option (c).

Option (a) is a uranium recovery process for uncarbonized resin. It involves stripping the uranium from the resin with a nitric acid solution. This option would not be feasible if the resin had been damaged by aging or irradiation exposure. However, tests to date have shown that aged resin may be unloaded successfully. An experiment was performed to determine the effect of self-radiolysis on uranium strippability of ^{233}U-loaded resin. Less than 0.05 wt % of the total uranium loaded remained on aged resin after stripping with 6 N nitric acid.[5] Option (a) would be the preferred method for recovery if a substantial quantity of scrap uncarbonized resin were generated.

According to option (b), all the particles without SiC coatings would be batched together and burned in a common furnace. The uncarbonized resin would undergo a carbonization step before burning to remove volatiles that would complicate the burner and associated off-gas system designs. The furnace ash would be leached with nitric acid (HNO_3) and filtered. Recycle of filtration solids would permit maximum uranium recovery. Option (b) would be the preferred recovery scheme for uncarbonized resin if little reject resin were produced, because it could be processed with other scrap forms. The uranyl nitrate streams from options (a) and (b) may be suitable for internal recycle without solvent extraction processing, unless decay products build up substantially during scrap processing.

If it were more economical to send refabrication scrap to the head end of the reprocessing system for recovery, option (c) would be selected. The uncarbonized resin would have to undergo carbonization because the head end of the reprocessing system is not prepared to accept unfired material. The carbonized resin, converted resin, and buffer-coated particles would have to be coated with OLTI layers to protect them from the atmosphere during transfer because they are pyrophoric. The buffer coating, due to its porosity, does not adequately protect the kernels from atmospheric exposure. The fuel from refabrication would present a greater pyrophoricity hazard than irradiated fuel handled by the head

end of the reprocessing system because it is not diluted with fission products. All the particle types would be assayed before transfer to satisfy material balance requirements. Development work would be required to provide an accurate assay system for these forms of scrap material.

To simplity the equipment requirements and transfer operations, option (b) has been selected as the reference scrap recovery process for particles without SiC coatings. This selection was made pending further scrap generation definition and equipment costing.

Particles with SiC Coatings

Fuel particles that may be rejected following the SiC coating process include both SiC-coated particles and OLTI-coated particles. Five options for uranium recovery from particles with SiC coatings are shown in Fig. 4. Options (a) through (d) involve internal recovery of scrap SiC-coated particles by the refabrication system. In option (e), the scrap particles would be recovered by the reprocessing system.

If the particles were processed as shown in option (a), the SiC coatings would be cracked to expose the uranium-bearing kernels for subsequent burning and leaching operations. In the particle burner, the particle kernels and carbonaceous coatings would be burned to a dissolvable ash. This ash would be leached with nitric acid, followed by centrifugation to remove the insoluble SiC hulls. The uranyl nitrate stream would require solvent extraction processing to remove contaminants and decay daughters built up during scrap processing.

Uncracked particles could be recycled to the particle crusher following the centrifuge operation if inefficient cracking becomes a problem. However, developmental effort has shown that the separation of cracked from uncracked particles by screening or shape separation is a difficult process. Pneumatic classification may be suited for this operation, but this has not been demonstrated to date.

The SiC hulls generated in option (a) could be processed by one of two alternate flow schemes, if economically recoverable uranium were still associated with the hull material. An assay step may be desirable

ORNL-DWG 78-16797

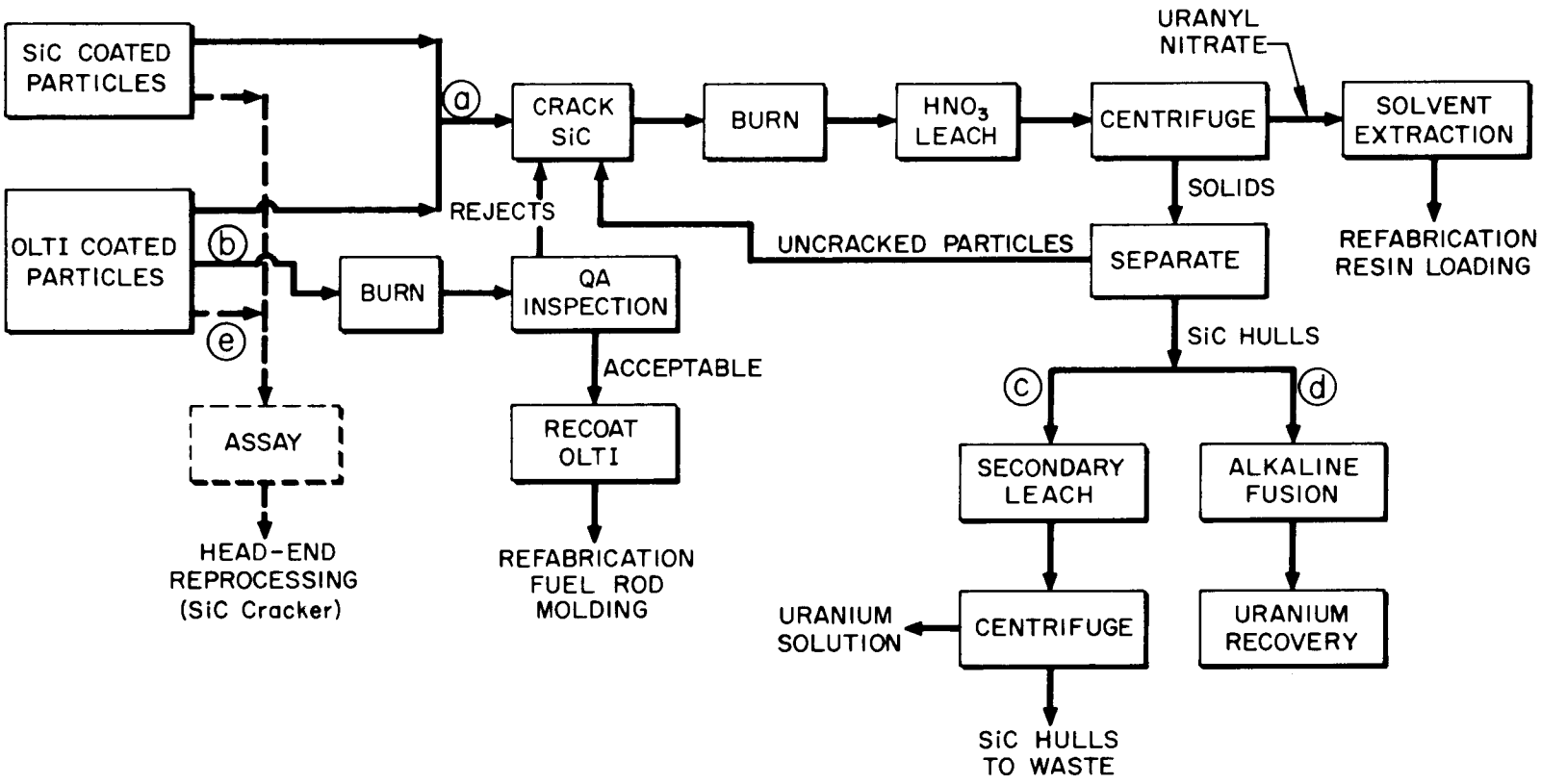

Fig. 4. Five options [(a) through (e)] for recovery of scrap particles with SiC coatings.

at this point to determine whether further recovery operations are warranted. Some concern has been expressed over the possibility of uranium remaining associated with the SiC hulls.[6] This is less likely for refabrication scrap than for irradiated material because some uranium migrates into the SiC layer during irradiation at high temperatures and for prolonged periods. Option (c) is a secondary leaching operation in which a stronger leach solution such as hydrofluoric acid would be employed for more complete uranium recovery. Introduction of fluoride to the system is undesirable, however, due to its corrosiveness toward system components. The hulls would then be centrifuged from the uranium solution, dried, and sent to waste. However, if the uranium were in the form of a silicate compound, secondary leaching may be insufficient for further uranium recovery.

An alternate processing method for the hulls is shown in option (d). This flowpath involves an alkaline fusion step to dissolve the SiC hulls completely, followed by a uranium recovery step. This process would permit recovery of any uranium associated with the hulls or with any uncracked particles. Several chemicals have been proposed for the alkaline fusion process, and a molten mixture of $KOH-KNO_3$ appears to be the most favorable candidate, because a high rate of reaction is expected at a relatively low temperature ($\sim$500°C).[7] However, no verified uranium recovery flowsheet currently exists for this operation.

The scheme selected for processing scrap OLTI-coated particles would depend on the reason for rejecting the particular batch of scrap particles. If the particles were rejected only because of defective OLTI coatings, then they could be processed as shown in option (b). Bad lot probabilities were included in the OLTI scrap generation estimates, so fewer particles with only defective OLTIs may be expected. Particles with other defective coatings or unacceptable properties would be routed to the SiC cracker. However, certain particle cracker designs may require particles without OLTI coatings as feed for proper operation and cracking efficiency. Therefore, an OLTI burn-back furnace may be required.

According to option (b), OLTI-coated particles would be burned to remove their defective coatings. They would then be inspected to ensure

that they satisfied quality assurance (QA) standards. Acceptable particles would be recoated with an OLTI layer and would be routed to the fuel rod molding system. Particles rejected at the QA inspection station would be processed as shown in option (a). Burn-back of OLTI coatings has been successfully demonstrated and is performed routinely in fuel refabrication development work. After OLTI burn-back, particle defective fractions of $\sim 3 \times 10^{-4}$ are obtained consistently.[8] Irradiation capsule HRB-15B, presently in reactor, contains particles recoated with OLTI layers to determine their performance under irradiation conditions.[9]

Processing scrap OLTI-coated particles as shown in option (b) would greatly simplify the scrap recovery flowsheet and would return the diverted uranium to the refabrication mainstream as efficiently as possible. Also, the money and effort already expended in fabricating these particles would not be completely wasted. However, this scrap recovery process will require developmental effort to ensure that the recoated particles meet fuel licensing requirements. Also, the cost of inspection, material accountability, and recoating will have to be balanced against the cost of recovering the uranium and starting again.

Recovery of scrap particles with SiC coatings by the reprocessing system is shown in option (e). An assay step would be required to satisfy material accountability requirements. Development work would be required to provide an accurate assay system for this form of scrap material. The scrap SiC-coated particles could be routed directly to the head-end SiC cracker. The OLTI-coated particles may require burning in the reprocessing primary burner or in a refabrication OLTI burner to remove the OLTI layer before cracking, unless the particle crusher is found to accept OLTI-coated particles as feed material. One advantage of transferring scrap SiC-coated particles to the head end is that the SiC hulls would dilute the hot head-end hulls and thus aid slightly in their handling and disposal.

Options (a) and (b) were selected as the reference recovery processes for scrap particles with SiC coatings to avoid material accountability problems associated with transfer to and recovery by the head-end reprocessing system. Unless development work reveals that further uranium recovery operations are economical, the SiC hulls from the centrifuge operation will be disposed of as waste.

Green Fuel Rods

Seven options for recovery of uranium from green (unfired) fuel rods are shown in Fig. 5. In options (a) through (f), scrap fuel rods would be processed by an internal refabrication scrap recovery system. Option (g) would involve transferring the rods to the head end of the reprocessing system for uranium recovery.

Options (a) and (b) are parallel processes for green fuel rod deconsolidation. Option (a) involves crushing the fuel rods to increase the material surface area for subsequent incineration. Green fuel rods contain ∿10% matrix volatiles that should be released gradually during the combustion operation for optimum incineration. Therefore, a continuous furnace has been proposed for this process so that only a small portion of green material feeds into the hot zone and undergoes devolatilization at any one time. The proposed furnace would burn both the volatile and carbonaceous fuel rod components as completely as possible to simplify the off-gas cleanup system. SiC-coated fissile particles and bare thoria (ThO_2) kernels would be discharged from the green fuel rod furnace.

Option (b) incorporates a matrix dissolution operation. This is a slow process involving refluxing of organic solvents. Many wash steps are required to remove all the matrix material from the fuel particles. A final burning operation may be necessary to remove traces of matrix material and organic solvents remaining. Ultrasonic vibration may be used to speed up this dissolution process.

After rod deconsolidation, the fertile and fissile particles would be separated by one of several methods: selective ThO_2 dissolution, pneumatic classification, or flotation separation. The separated thoria would be sent to the waste processing system or stored for future recycle.

Thoria kernels can be dissolved selectively with Thorex solution because the fissile SiC coating is insoluble. Any uranium contained in broken fissile particles would also be dissolved by this solution. If this were an appreciable amount of fissile material, recovery of uranium from the Thorex solution could be accomplished by solvent extraction.

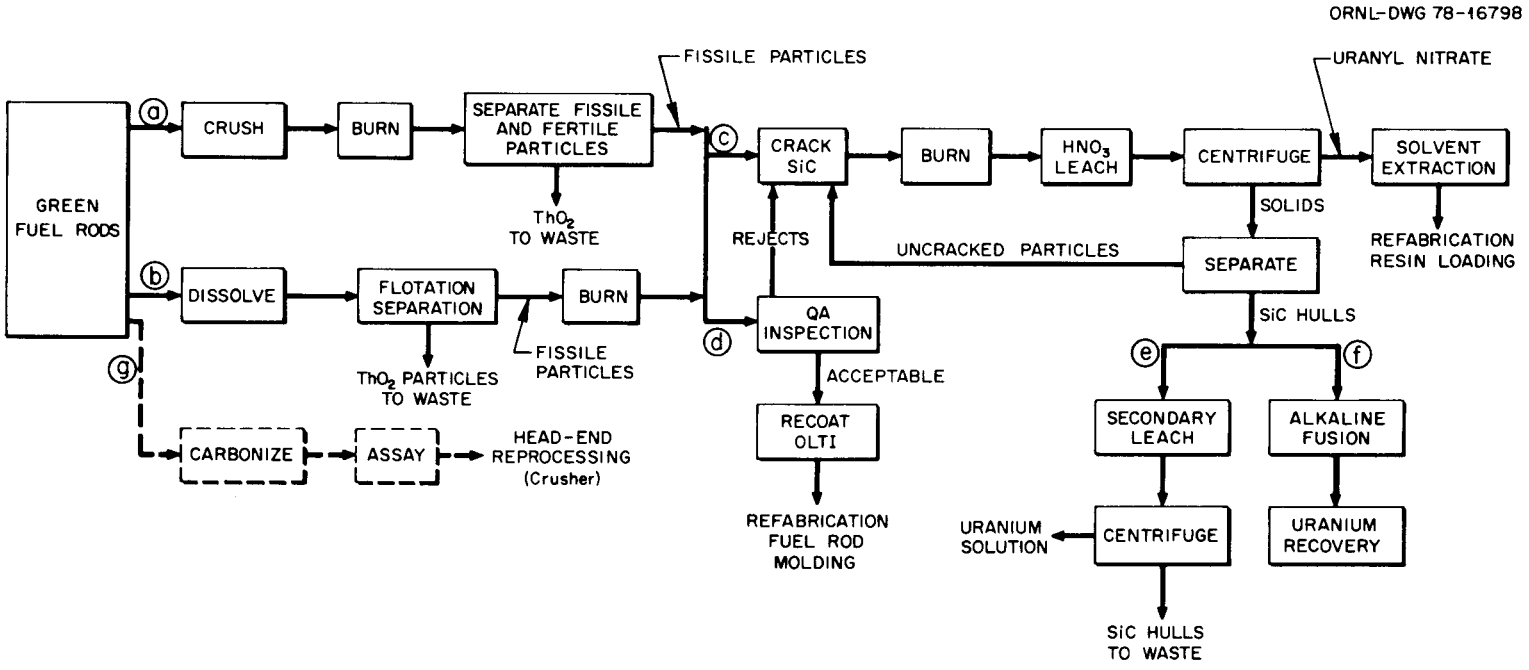

Fig. 5. Seven options [(a) through (g)] for recovery of scrap green fuel rods.

Pneumatic classification is currently used to separate the fissile and fertile particles. Material crossover has been of some concern during this operation. Approximately 2% crossover in each direction is now experienced; that is, the separation of the particles is not totally complete: 1.5% of the fertile particles are mixed with the fissile particles, and 2% of the uranium is lost with the thoria sent to waste.[10]

Fissile and fertile particles can also be separated by flotation separation by virtue of their density differences, as shown in option (b). This operation involves the use of organic solvents and solvent cleanup procedures.

If the fissile particles were not damaged by the deconsolidation operation, they could be processed as shown in option (d). Following QA inspection, the particles would undergo OLTI recoating and then be recycled to the refabrication fuel rod molding system. This option would return the rejected material to the refabrication mainstream with minimum processing expenditure. However, preliminary crushing experiments have shown that a green rod crusher breaks an average of 5% of the fissile particles.[11] This percentage of broken particles would be unacceptable in fuel material. Another concern is the thoria crossover from the air classification step. Classified fissile material containing >0.01% fertile kernels would be unacceptable for OLTI recoating and recycle because it would not meet fuel specifications. Unacceptable fissile material would be sent to the SiC cracker.

Options (c), (e), and (f) are the same as those discussed in the section on particles with SiC coatings. Fissile particles would be crushed, burned, leached with nitric acid, and centrifuged to recover the major portion of the uranium, and they would be processed further if sufficient uranium still remained to economically warrant its recovery. Further processing may include the separation of uncracked particles, secondary leaching, or alkaline fusion.

Option (g) would be followed for scrap green fuel rod recovery by the head end of the reprocessing system. The head end is not equipped to handle green (uncarbonized) material, and the petroleum pitch matrix material may cause crusher sticking and off-gas cleanup problems. Therefore, a carbonization step would be required before transfer. An assay

step would also be necessary to satisfy material accountability requirements. Assay of fuel rods has been demonstrated,[12] but scrap green fuel rods that have been broken, chipped, or partially formed may be more difficult to assess accurately.

Options (a) and (c) have been included in the reference scrap recovery flowsheet to eliminate use of solvents, secondary processing, and transfer operations. Also, selective ThO_2 dissolution has been chosen as the reference process for fissile-fertile particle separation to eliminate the crossover problems now experienced with pneumatic classification.

Fuel Elements

Seven processing options for the recovery of uranium from scrap fuel elements are shown in Fig. 6. The two major choices are internal recovery of the uranium by the refabrication system, as shown in options (a) and (b), and external recovery of the uranium by the reprocessing system, as shown in option (g). For each of the preceding scrap forms, internal uranium recovery by the refabrication system was chosen as the reference scrap recovery scheme. However, for scrap fuel element recovery, several additional points must be considered before the reference flowsheet is chosen.

The head end of the reprocessing system is designed and fully equipped to process fuel blocks. Also, the uranium content of each fuel block is accurately known from fuel rod assay measurements so material balance requirements could be satisfied before transfer of the scrap blocks from the refabrication to the reprocessing system. The head end is prepared and correctly sized to accept very low-burnup reactor fuels and, therefore, can also accept scrap blocks without criticality problems caused by lack of dilution by fission product material.

If internal recovery of the scrap fuel blocks, as in option (a), were the processing scheme selected, a costly block crusher would be required. The duplication of this large equipment item, already included in the head-end system, would probably not be justified by the small volume of reject fuel blocks anticipated. Option (b) may simplify

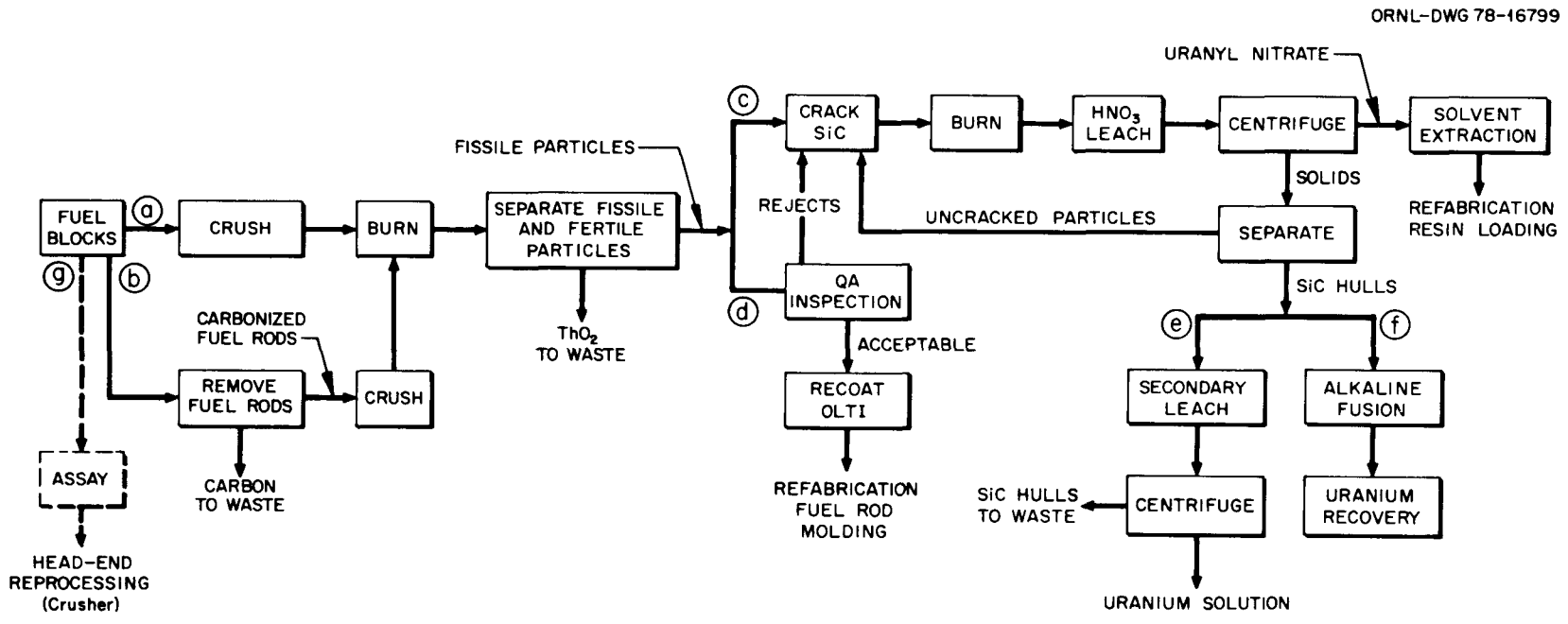

Fig. 6. Seven options [(a) through (g)] for recovery of scrap fuel elements.

the equipment requirements because the fuel rods are removed from the graphite blocks before being crushed. However, the feasibility of fuel rod removal has not been demonstrated and may be a difficult step in itself.

If the refabrication system were chosen for the recovery of uranium from scrap fuel blocks, the processing steps following deconsolidation would be primary burning and separation of fertile kernels from the fissile particle stream. An OLTI recoating scheme has been included, as shown in option (d), following a QA inspection step. However, some particle breakage would occur during the crushing operations. This could prevent recoating and direct recycle of the fissile particles. Subsequent options (c), (e), and (f) are the same as those discussed in the section about particles with SiC coatings. Fissile particles would be crushed, burned, leached with nitric acid, and centrifuged to recover the uranium as a uranyl nitrate stream. If economical, further processing to recover any residual uranium associated with the SiC hulls could be undertaken as shown in options (e) and (f). Also, uncracked particles could be recycled to the particle cracker following a procedure to separate cracked from uncracked particles.

Option (g) has been selected as the reference process for scrap fuel element recovery, because the reprocessing system is entirely equipped to process this fuel form and the refabrication system is prepared for its transfer.

Furnace Parts

During the conversion and coating operations, small quantities of uranium are volatilized and abraded from the fluidized particle bed and may be deposited on portions of the coating furnace. Also, some fuel particles may adhere to the carbon furnace components. A brushing operation is planned to remove soot and other adherent material, and uranium may be associated with this product. Therefore, used furnace parts and associated furnace soot may contain economically recoverable quantities of uranium. The furnace parts that comprise this scrap stream are gas distributors (frits), crucibles, and liners (as depicted in a profile

of the coating furnace in Fig. 7). Graphite heating elements and carbon insulation packing may also be batched together with the other graphite furnace components for disposal. An assay step would be necessary to determine whether scrap processing for uranium recovery is justified or whether this material should be classified as a waste stream.

Five options [(a) through (e)] for the recovery of uranium associated with used furnace parts and furnace soot are shown in Fig. 8. Options for internal recovery of uranium by the refabrication system are shown in flowpaths (a) through (d). Option (e) involves uranium recovery by the reprocessing system.

If processed according to options (a) and (b), the used furnace parts would be crushed first and then combined with the furnace soot to be burned, leached with nitric acid, and centrifuged to recover the uranium as a uranyl nitrate solution. This stream would be processed through a solvent extraction system to purify the stream for the refabrication resin-loading system. The furnace used for the burning operation may be either static or fluidized bed. Burning carbon furnace parts in a static-bed furnace would be slow. However, burning the carbon in a fluidized bed would require a more sophisticated furnace with fines recycle and the use of inert particles in the bed.

The centrifuged solids could be processed further if sufficient uranium still remained. Particles with SiC coatings that had adhered to the furnace parts could be separated from the solids and crushed to expose their uranium-bearing kernels. However, this is a difficult separation process. All the solid material could be routed through the SiC crusher if this crusher feed were acceptable. After crushing, the material would be burned, leached, and centrifuged for uranium recovery.

Any remaining solids that contained sufficient uranium for economic recovery could be processed as shown in options (c) or (d). These options have been discussed in preceding sections, but option (d) warrants further attention. During coating operations, a layer of SiC deposits on many furnace parts. This material may cause equipment wear problems and may impair uranium recovery. With alkaline fusion, all the SiC present would be dissolved and would enable better uranium recovery. Any uranium in unbroken particles or associated with the SiC hulls would

ORNL-DWG 74-377R2

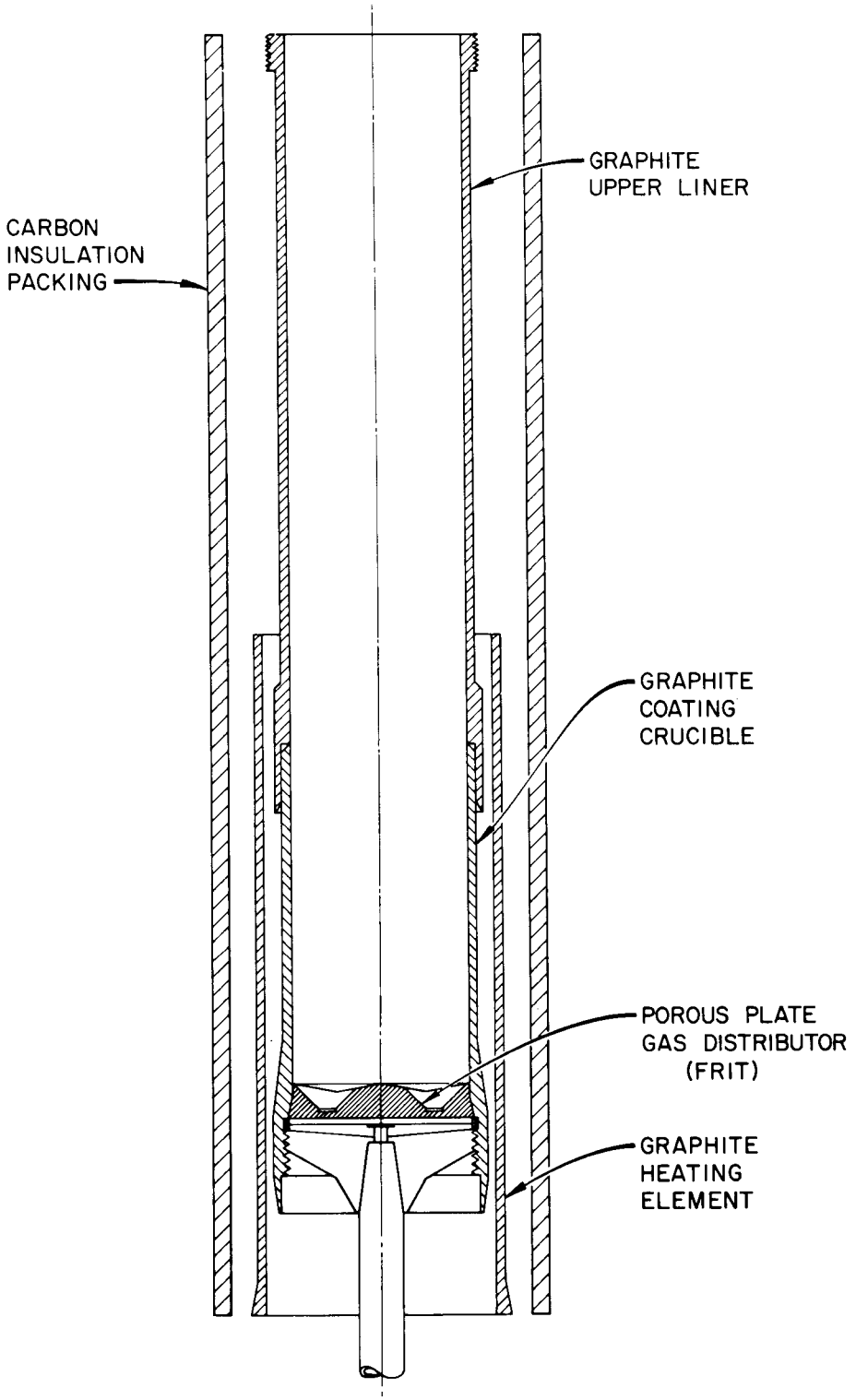

Fig. 7. Coating furnace profile.

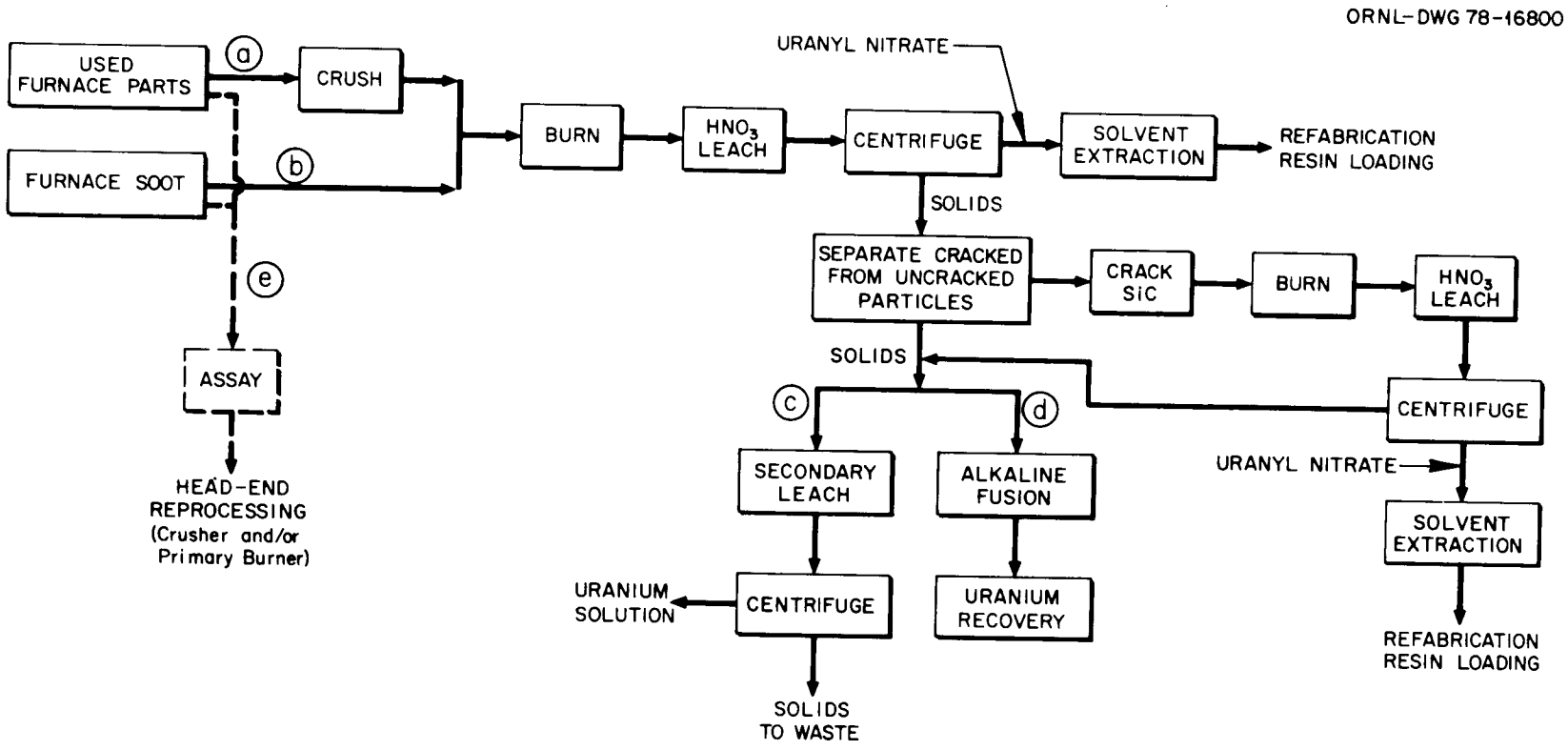

Fig. 8. Five options [(a) through (e)] for recovery of uranium associated with used furnace parts and furnace soot.

be recoverable by this scheme. However, little uranium is expected to be associated with used furnace parts, so further uranium recovery will probably be unnecessary.

Option (e) involves recovery of uranium from the used furnace parts and furnace soot by the reprocessing system. An assay step would be required before transfer for material balance requirements, and this scrap stream may be difficult to assay accurately due to the small quantities of uranium anticipated. The head-end reprocessing system is not prepared to process material in this form, and problems may result from off-gas stream dilution by burning this much material free of fission products. Also, the increased CO_2 generation from burning this carbonaceous stream would increase carbon dioxide solidification costs. Due to the difficulties in transferring and processing this scrap stream by the reprocessing system, option (e) has been dropped from the reference flowsheet. Also, the processing of solids after initial leaching has been dropped from the reference process because little uranium is expected to be associated with this scrap stream.

Perchloroethylene Distillation Bottoms

Perchloroethylene is used as the nonmoderating scrubbing solvent for the off-gas streams from the carbonization, coating, and cure-in-place furnaces. During furnace operations, perchloroethylene removes soot, tars, and other condensable compounds from the off-gas streams. Uranium vaporized or abraded during the furnace operations may also be removed by the perchloroethylene scrubbers. After the perchloroethylene is saturated with off-gas constituents, it is sent to the perchloroethylene recovery system, where it is distilled and the clean solvent is recovered. The distillation bottoms from the recovery operation may contain sufficient uranium to warrant recovery. An assay procedure may be necessary to determine whether uranium recovery is justified or whether the perchloroethylene distillation bottoms can be treated as a waste stream.

Some of the condensable off-gas compounds contained in the perchloroethylene distillation bottoms are polynuclear aromatic hydrocarbons

(PNAs), thought to be carcinogenic, cocarcinogenic, or tumor promoting.[13] Therefore, the perchloroethylene distillation bottoms are hazardous, and no method is currently sanctioned for their disposal. Burning or similar processing will likely be required, even if they are classified as a waste stream.

Three options to recover the uranium contained in perchloroethylene distillation bottoms are shown in Fig. 9. None of the options shown proposes to send the perchloroethylene distillation bottoms to the reprocessing system for uranium recovery. No provisions in the head-end reprocessing system exist to accept or process material of this form. Therefore, the refabrication system must handle this material stream internally.

Burning perchloroethylene distillation bottoms by conventional methods, as in option (a), may be hazardous if combustion is incomplete. Phosgene (a toxic off-gas) may be produced, and PNAs may be released. Therefore, an off-gas cleanup system would be required for a conventional incinerator to prevent noxious discharges to the environment. A furnace that would accept or dry a slurry would also be required. Following burning, the ash would be leached with nitric acid and centrifuged to recover any uranium present as a uranyl nitrate solution. This stream would be purified by solvent extraction before transfer to the refabrication resin-loading system.

A waste incineration system similar to that at Rockwell International's Rocky Flats Plant may possibly be suited for disposal of perchloroethylene distillation bottoms.[14] It is a fluidized-bed system, as shown in option (b), capable of burning chlorinated compounds that form corrosive hydrochloric acid when decomposed. This is done *in situ* in a fluidized bed of sodium carbonate (Na_2CO_3) granules. Incineration is completed in a second fluidized bed containing an oxidation catalyst, chromic trioxide-coated alumina particles. An advantage of this incinerator is that combustion is complete, while operating the beds at about 550°C. This temperature eliminates the need for any refractories within the system and keeps the bed materials below their melting points. By dissolving the salt and leaching the ash, plutonium has been recovered from this incinerator.

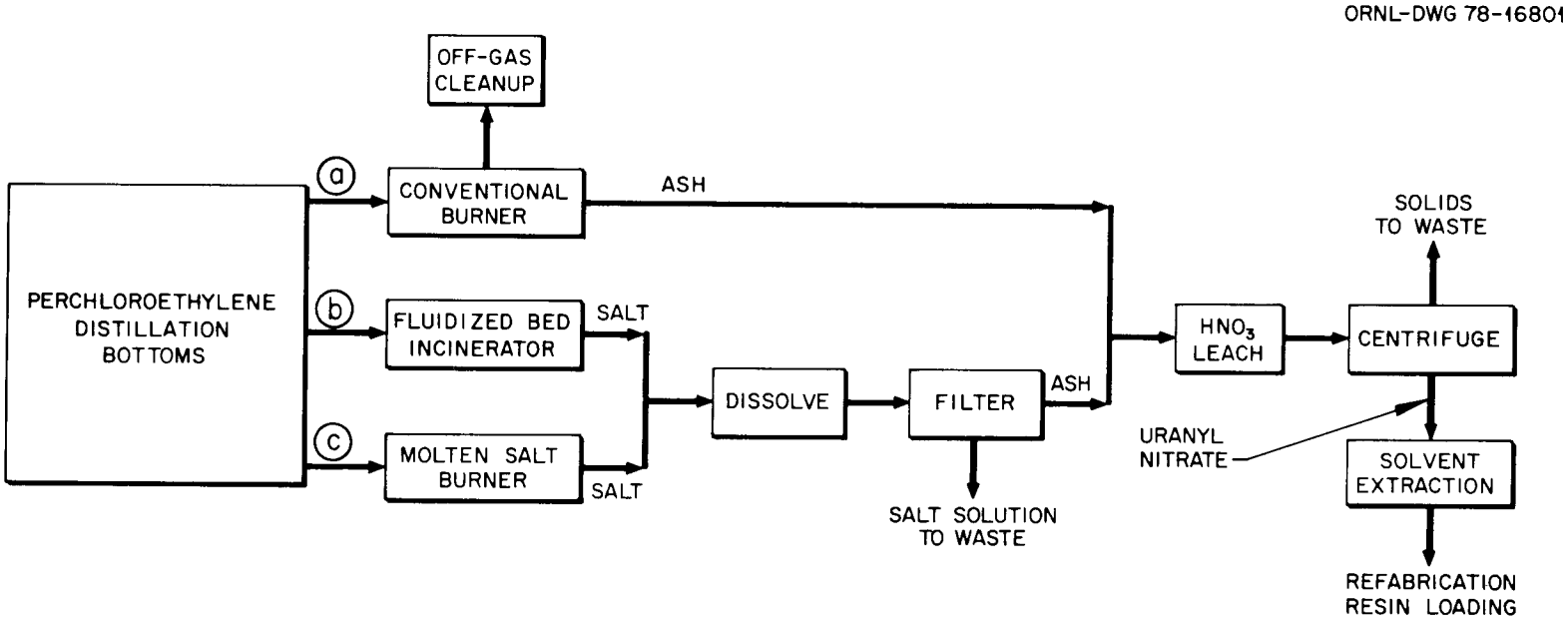

Fig. 9. Three options [(a) through (c)] for recovery of uranium from perchloroethylene distillation bottoms.

A third incinerator is a molten-salt burner, shown in option (c). Atomics International (AI), a division of Rockwell International, developed a molten-salt burner in which the feed is introduced underneath the salt bath so that any gas formed during combustion is forced to pass through the melt before it is emitted to the atmosphere.[15] Complete combustion of the material is facilitated to produce only carbon dioxide and water as gaseous effluents. Acidic gases, such as HCl, produced from organic chloride compounds, are instantly neutralized and absorbed by the alkaline Na_2CO_3 melt. An experiment conducted in AI's laboratory-scale burner demonstrated it could completely combust perchloroethylene distillation bottoms.[16] By dissolving the salt and leaching the insoluble ash, uranium recoveries as high as 99.6% were achieved.

The molten-salt burner operates at temperatures of $\sim$950°C and, therefore, requires refractories to contain the molten-salt bath. This feature is undesirable for hot cell maintenance. Also, substantial wastes — spent salt and furnace refractories — are generated during this process and would present radioactive waste disposal problems.

The processing options shown assume that a particle trap will be incorporated in the perchloroethylene off-gas scrubbing systems to remove any fissile particles that may have blown over during operation of the fluidized-bed furnaces. If this were not the case, the SiC-coated particles in the filtrate from options (a) and (b) would be routed through the SiC crusher and processed for uranium recovery. Particles coated with SiC would be solubilized in the molten-salt burner in option (c).

Option (b) has been selected as the reference process for uranium recovery and disposal of perchloroethylene distillation bottoms. A fluidized-bed incinerator similar to Rocky Flats Plant's system requires negligible off-gas cleanup, operates at low temperatures, and provides for uranium recovery.

Analytical Samples

An additional scrap stream is composed of uranium-bearing analytical samples. The material in this stream has many forms: uranium-loaded

resin, buffer-coated particles, SiC-coated particles, OLTI-coated particles, miscellaneous particle types, particle fragments, fuel rods, fuel rod fragments, U_3O_8 ash, nitric acid solutions, miscellaneous uranium-bearing solutions, U_3O_8 in silver matrix, and uranium and UC_2 in platinum. As Fig. 10 shows, each particular sample type will be batched with a similar scrap material form for uranium recovery processing. The material handling problems and costs associated with distributing the various analytical sample forms will be a limiting factor of this process. An accumulation procedure for each particular material form would aid in the overall handling of this scrap stream.

The processing steps for each basic scrap form have been discussed in previous sections. The dissolution and solvent extraction systems

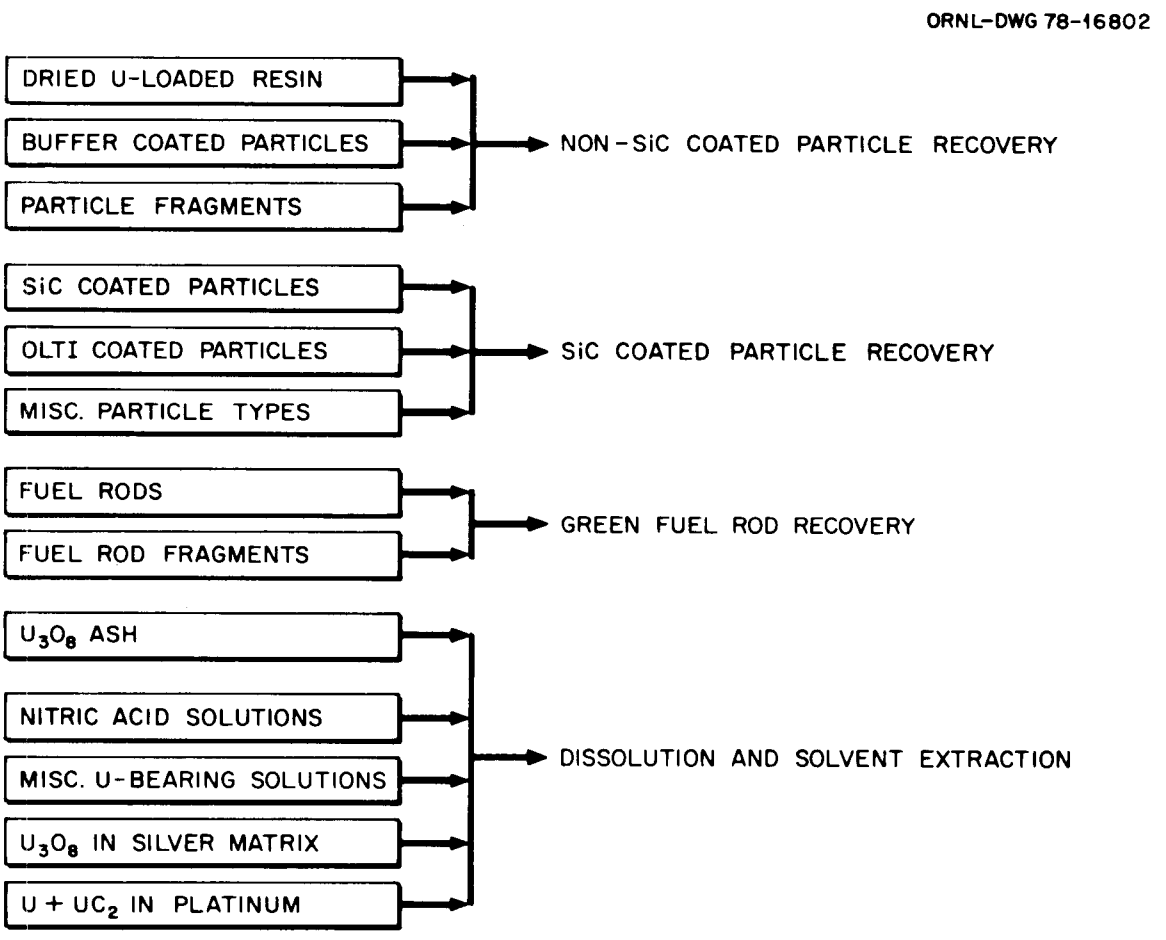

Fig. 10. Recovery of uranium-bearing analytical samples.

would be common to all scrap recovery operations. Sending this scrap stream to the reprocessing system for uranium recovery would require extensive material handling and accountability operations. Therefore, uranium-bearing analytical samples will be processed by the refabrication scrap recovery system.

REFERENCE SCRAP RECOVERY SYSTEM

The reference scrap recovery flowsheet selected for HTGR refabrication scrap processing is shown in Fig. 11. All the scrap streams will be recycled internally within the refabrication system with the exception of reject fuel elements, which will be tranferred to the reprocessing system for uranium recovery. Conventional crushing, burning, and leaching methods have been selected as the reference uranium recovery processes. Recoating of particles with defective OLTI coatings has also been included as a reference process, following inspection of the burned-back SiC-coated particles. A solvent extraction system will purify the recovered uranium so that it can be directly recycled to the refabrication resin-loading system. Scrap uranyl nitrate streams and uranyl nitrate samples will be routed directly to the solvent extraction system.

SCRAP MASS FLOWS

The quantities of uranium, both ^{235}U and ^{233}U, flowing through the reference scrap recovery system (Fig. 11) are listed in Table 3. These have been calculated for the HRRF with an output of 7.7 type 25R fuel elements per day containing 10 kg ^{235}U and 88 kg Th and 42.3 type 23R fuel elements per day containing 27 kg ^{233}U and 482 kg Th. This gives an annual production of 2000 25R fuel elements and 11,000 23R fuel elements, assuming 260 effective full-production days per year. Scrap processing losses were assumed to be negligible so that maximum equipment capacities could be determined (given in Table 4). Output per day from the refabrication scrap recovery system is estimated to be 4.02 kg ^{235}U and 10.85 kg ^{233}U.

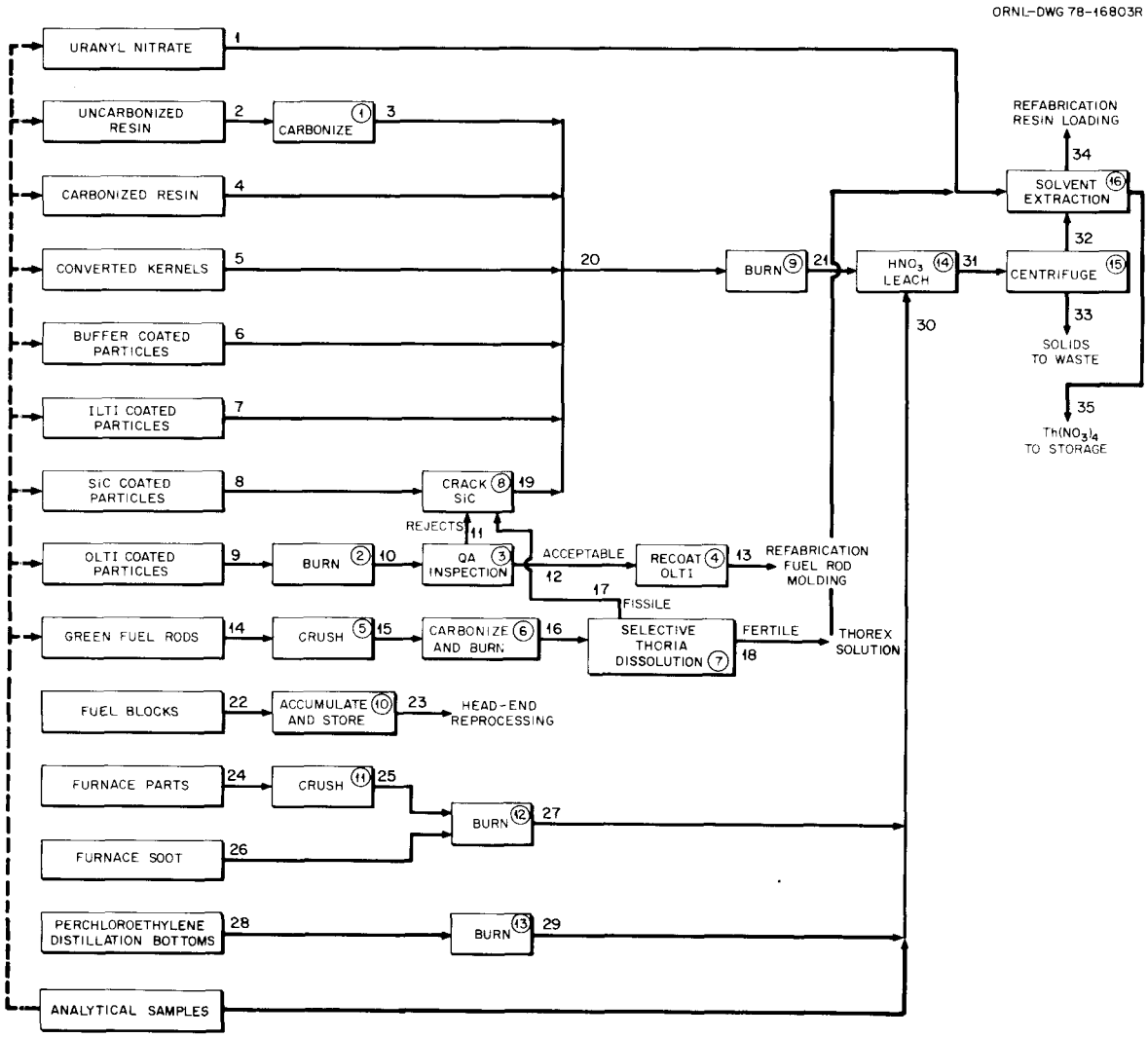

Fig. 11. Reference refabrication scrap recovery system.

SUMMARY

A reference flowsheet for recovery of scrap fuel material generated during HTGR fuel refabrication was selected following a detailed review of processing options. All scrap fuel streams will be recycled internally within the refabrication system with the exception of reject fuel elements, which will be transferred to the head end of the reprocessing system for uranium recovery. Preparatory processing, accurate material accountability, safeguards, and inventory charges may impose a high cost factor on transfer of scrap fuel material to the reprocessing system for recovery.

Table 3. Scrap recovery system projected mass flows

Stream	Material form	Quantity per day (kg)		
		^{235}U	^{233}U	Th
1	Uranyl nitrate	0.157	0.424	
2	Uncarbonized resin	1.02	2.75	
3	Carbonized resin	1.02	2.75	
4	Carbonized resin	0.665	1.80	
5	Converted kernels	0.012	0.032	
6	Buffer-coated particles	0.258	0.696	
7	ILTI-coated particles	0.253	0.683	
8	SiC-coated particles	0.247	0.666	
9	OLTI-coated particles	1.34	3.62	
10	SiC-coated particles	1.34	3.62	
11	SiC-coated particles	1.10	2.98	
12	SiC-coated particles	0.236	0.637	
13	OLTI-coated particles	0.236	0.637	
14	Green fuel rods	0.053	0.143	3.06
15	Crushed fuel rods	0.053	0.143	3.06
16	SiC-coated particles + ThO_2 kernels	0.053	0.143	3.06
17	SiC-coated particles	0.053	0.143	
18	ThO_2			3.06
19	Crushed SiC particles	1.40	3.79	
20	Mixed particles	3.61	9.75	
21	U_3O_8 ash + SiC hulls	3.61	9.75	
22	Fuel elements	0.095	0.256	5.39
23	Fuel elements	0.095	0.256	5.39
24	Furnace parts	0.030	0.081	
25	Crushed furnace parts	0.030	0.081	
26	Furnace soot	0.060	0.162	
27	U_3O_8 ash	0.090	0.243	
28	Perchloroethylene distillation bottoms	0.162	0.437	
29	U_3O_8 ash	0.162	0.437	
30	U_3O_8 ash	0.252	0.680	
31	Uranyl nitrate + SiC hulls	3.86	10.43	
32	Uranyl nitrate	3.86	10.43	
33	SiC hulls			
34	Uranyl nitrate	4.02	10.85	
35	Thorium nitrate			3.06

Table 4. Scrap recovery system production[a] equipment capacities

Stream	Equipment item	Scrap mass flows			Anticipated daily capacity (kg)	
		Material form	Containing (kg)			
			^{235}U	^{233}U	^{235}U	^{233}U
1	Resin carbonization furnace	Uncarbonized resin	2.12	5.73	1.02	2.75
2	OLTI burner	OLTI-coated particles	7.88	21.29	1.34	3.62
3	OLTI inspection station	SiC-coated particles	6.09	16.45	1.34	3.62
4	OLTI recoating furnace	SiC-coated particles	1.07	2.90	0.236	0.637
5	Green fuel rod crusher	Green fuel rods[b]	78 rods	210 rods	0.053	0.143
6	Green fuel rod burner	Crushed fuel rods[b]	78 rods	210 rods	0.053	0.143
7	Selective ThO_2 dissolver	SiC-coated particles	0.24	0.65	0.053	0.143
8	Particle crusher	SiC-coated particles	6.36	17.23	1.40	3.79
9	Particle burner	Mixed particle types	10.03	27.13	3.61	9.75
10	Fuel block storage	Fuel blocks	9.14	24.6	0.095	0.256
11	Furnace parts crusher	Graphite furnace parts	19.1	51.6	0.030	0.081
12	Furnace parts burner	Crushed graphite and soot	31.3	84.5	0.090	0.243
13	Perchloroethylene distillation bottoms burner	Perchloroethylene distillation bottoms	162	437	0.162	0.437
14	Leacher	U_3O_8 ash	4.56	12.3	3.86	10.43
15	Centrifuge	Uranyl nitrate[c]	2310	6280	3.86	10.43
16	Solvent extraction	Uranyl nitrate[d]	24.0	130.8	4.02	10.85

[a]Production equipment means anticipated HRRF full-scale equipment, which should be comparable to full-commercial-scale equipment.

[b]5/8-in.-diam fuel rods.

[c]Assuming 0.02 M uranyl nitrate.

[d]Assuming 2 M uranyl nitrate containing ^{235}U and 1 M uranyl nitrate containing ^{233}U.

Conventional crushing, burning, and leaching methods have been selected as the reference uranium recovery processes for the HTGR refabrication scrap fuel forms, which include particles with and particles without SiC coatings, green fuel rods, furnace parts, perchloroethylene distillation bottoms, and analytical samples. Recoating of particles with defective OLTI coatings has also been included as a reference process so this scrap fuel form may be returned to the refabrication mainstream as efficiently as possible. A solvent extraction system will be included in the scrap recovery system so the recovered uranium may be purified and recycled directly to the refabrication resin-loading system.

Scrap generation estimates indicate that as much as 40% of the total uranium in the end product may be rejected as scrap during refabrication

processing. Mass flows through the reference scrap recovery system were calculated for the HTGR Reference Recycle Facility operating with the highly enriched uranium fuel cycle. Output per day from the refabrication scrap recovery system is estimated to be 4.02 kg ^{235}U and 10.85 kg ^{233}U. Future work will be directed toward development and costing of the scrap recovery processes chosen as reference.

ACKNOWLEDGMENTS

The author wishes to thank W. J. Lackey and J. E. Van Cleve, Jr., for excellent work direction; J. A. Carpenter, D. R. Johnson, and A. R. Olsen for reviewing the manuscript; M. S. Hendricks for laboratory work; H. R. Livesy and M. A. Patrizio for drawings; N. W. Richards for technical editing; Rhonda Castleberry for preparing the draft manuscript; and Bette Etter for typing the final manuscript.

REFERENCES

1. A. L. Lotts, J. H. Coobs, *HTGR Fuel and Fuel Cycle Technology*, ORNL/TM-5501 (August 1976).

2. M. S. Judd, R. A. Bradley, and A. R. Olsen, *Characterization of Effluents from a High-Temperature Gas-Cooled Reactor Fuel Refabrication Plant*, ORNL/TM-5059 (December 1975).

3. Personal communication, R. P. Vanek, General Atomic Company, San Diego, Calif., Jan. 4, 1977.

4. Code of Federal Regulations, CFR-10, Revised Jan. 1, 1976, Part 70, Special Nuclear Material.

5. A. L. Lotts and P. R. Kasten (Compiled by), *Gas-Cooled Reactor Programs, HTGR Fuel Recycle Development Program Annual Progress Report for Period Ending September 30, 1977*, ORNL-5423, Sect. 4.2.1.3, p. 83 (September 1978).

6. K. H. Lin and W. E. Clark, "High-Level Solid Wastes from HTGR Fuel Reprocessing," *Trans. Am. Nucl. Soc.*, 27: 442–43 (December 1977).

7. K. H. Lin, *Process Alternatives for HTGR Fuel Reprocessing Wastes: An Engineering Evaluation*, ORNL/TM-5823 (May 1977).

8. Personal communication, D. P. Stinton, UCC-ND, ORNL Metals and Ceramics Division, Oak Ridge, Tenn., Mar. 3, 1978.

9. General Atomic Company, San Diego, Calif., *Test Plan for Capsule HRB-15B*, HRB15B-101 (Mar. 10, 1978).

10. N. Holder and L. Abraham, *Reprocessing Yields and Material Throughput — HTGR Recycle Demonstration Facility*, GA-A14320 (August 1977).

11. A. L. Lotts and P. R. Kasten (Compiled by), *Gas-Cooled Reactor Programs, HTGR Fuel Recycle Development Program Annual Progress Report for Period Ending September 30, 1977*, ORNL-5423, Sect. 4.5.1.1, pp. 177—8 (September 1978).

12. J. D. Jenkins, S. R. McNeany, and J. E. Rushton, *Conceptual Design of the Special Nuclear Material Nondestructive Assay and Accountability System for the HTGR Fuel Refabrication Pilot Plant*, ORNL/TM-4917 (July 1975).

13. M. S. Judd, J. E. Van Cleve, Jr., and W. T. Rainey, Jr., *Recovery of Perchloroethylene Scrubbing Medium Generated in the Refabrication of High-Temperature Gas-Cooled Reactor Fuel*, ORNL/TM-5620 (November 1976).

14. L. L. Richey, P. T. Faccini, and P. K. Feng, *Status Report on the Fluidized Bed Incineration System for U.S. Department of Energy Defense Waste, July—December 1976*, RFP-2654 (Mar. 27, 1978).

15. D. E. McKenzie et al., *Disposal of Transuranic Solid Waste Using Atomics International Molten Salt Combustion Process*, AI-ERDA-13151 (May 5, 1975).

16. K. M. Barclay, S. J. Yosim, R. T. Gay, and T. F. Grantham, *Disposal of Perchloroethylene Bottoms by Molten Salt Combustion*, AI-77-82 (November 1977).

ORNL/TM-6625
Distribution
Category UC-77

INTERNAL DISTRIBUTION

1–2. Central Research Library
3. Document Reference Section
4–8. Laboratory Records Department
9. Laboratory Records Department, RC
10. ORNL Patent Section
11. E. J. Allen
12. W. J. Armento
13. R. L. Beatty
14. E. S. Bomar
15. J. A. Carpenter, Jr.
16. A. J. Caputo
17. W. P. Eatherly
18–19. M. R. Hill
20. D. R. Johnson
21. R. R. Judkins
22–31. P. R. Kasten
32. W. J. Lackey
33. K. H. Lin
34. A. L. Lotts
35. J. E. Mack
36. K. J. Notz
37. A. R. Olsen
38. D. P. Stinton
39. R. R. Suchomel
40–44. S. M. Tiegs
45. T. N. Tiegs
46. B. A. Worley
47. R. W. Balluffi (Consultant)
48. W. R. Hibbard, Jr. (Consultant)
49. M. J. Mayfiled (Consultant)
50. J. T. Stringer (Consultant)

EXTERNAL DISTRIBUTION

51–52. DOE, DIVISION OF NUCLEAR POWER DEVELOPMENT, Washington, DC 20545

Director

53. SAN-DEVELOPMENT, SAN DIEGO AREA OFFICE, P.O. Box 81325, San Diego, CA 92138

Senior Program Coordinator

54. DOE, SAN FRANCISCO OPERATIONS OFFICE, 1333 Broadway, Wells Fargo Building, Oakland, CA 94612

Manager

55. DOE, OAK RIDGE OPERATIONS OFFICE, P.O. Box E, Oak Ridge, TN 37830

Assistant Manager, Energy Research and Development

56–231. DOE, TECHNICAL INFORMATION CENTER, P.O. Box 62, Oak Ridge, TN 37830

For distribution as shown in TID-4500 Distribution Category, UC-77 (Gas-Cooled Reactor Technology)

☆U.S. GOVERNMENT PRINTING OFFICE: 1979-748-189/429