OAK RIDGE NATIONAL LABORATORY LIBRARIES
3 4456 0555697 5

ORNL/TM-6960

ornl

OAK
RIDGE
NATIONAL
LABORATORY

UNION
CARBIDE

Design and Evaluation of an On-Line Fuel Rod Assay Device for an HTGR Fuel Refabrication Plant

J. E. Rushton
E. J. Allen
M. M. Chiles
J. D. Jenkins

CENTRAL RESEARCH LIBRARY
CIRCULATION SECTION
4500N ROOM 175
LIBRARY LOAN COPY
DO NOT TRANSFER TO ANOTHER PERSON
If you wish someone else to see this report, send in name with report and the library will arrange a loan.
UCN 7969 (3 9-77)

METALS and CERAMICS
ENERGY
RESEARCH
DEVELOPMENT
OAK RIDGE NATIONAL LABORATORY

OPERATED BY
UNION CARBIDE CORPORATION
FOR THE UNITED STATES
DEPARTMENT OF ENERGY

Printed in the United States of America. Available from
National Technical Information Service
U.S. Department of Commerce
5285 Port Royal Road, Springfield, Virginia 22161
NTIS price codes—Printed Copy: A04 Microfiche A01

This report was prepared as an account of work sponsored by an agency of the United States Government. Neither the United States nor any agency thereof, nor any of their employees, makes any warranty, expressed or implied, or assumes any legal liability or responsibility for any third party's use or the results of such use of any information, apparatus, product or process disclosed in this report, or represents that its use by such third party would not infringe privately owned rights.

ORNL/TM-6960
Dist. Category UC-77

Contract No. W-7405-eng-26

Metals and Ceramics Division
Engineering Technology Division

Consolidated Fuel Recycle Program
HTGR-Specific Fabrication — Task 400

DESIGN AND EVALUATION OF AN ON-LINE FUEL ROD ASSAY DEVICE FOR AN HTGR FUEL REFABRICATION PLANT

J. E. Rushton M. M. Chiles
E. J. Allen J. D. Jenkins

Date Published: November 1979

OAK RIDGE NATIONAL LABORATORY
Oak Ridge, Tennessee 37830
operated by
UNION CARBIDE CORPORATION
for the
DEPARTMENT OF ENERGY

OAK RIDGE NATIONAL LABORATORY LIBRARIES

3 4456 0555697 5

CONTENTS

Page

ABSTRACT 1

1. INTRODUCTION 2

2. DESCRIPTION OF AN HTGR FUEL REFABRICATION PLANT 3

3. SELECTION OF ASSAY METHOD 6

4. EXPERIMENTAL ASSAY DEVICE 8

4.1 Description 8

4.1.1 Design 8
4.1.2 Electronics 13
4.1.3 Detectors 13

4.2 Precision and Accuracy 19

4.2.1 Precision 19
4.2.2 Accuracy 21

4.3 Operation 30

4.3.1 Stationary or moving scans 30
4.3.2 Multiple fuel rod assay 32
4.3.3 Long-term operation 34

5. PRODUCTION ASSAY DEVICE 37

5.1 Performance Criteria 37

5.2 Design and Operation 38

6. ANALYSIS PROCEDURES 43

7. COMPLIANCE WITH MATERIAL ACCOUNTABILITY REQUIREMENTS 47

8. SUMMARY AND CONCLUSIONS 48

ACKNOWLEDGMENTS 49

REFERENCES 50

APPENDIX A. NONDESTRUCTIVE FISSILE ISOTOPIC MEASUREMENT OF $^{233}U/^{235}U$ FUELS USING PROMPT AND DELAYED FISSION NEUTRON COUNTING 51

APPENDIX B. DATA ANALYSIS PROCEDURE FOR ASSAY OF HTGR FUEL RODS ... 55

DESIGN AND EVALUATION OF AN ON-LINE FUEL ROD ASSAY DEVICE FOR AN HTGR FUEL REFABRICATION PLANT

J. E. Rushton* M. M. Chiles‡
E. J. Allen† J. D. Jenkins§

ABSTRACT

This report describes work performed in development of an on-line assay device to be used in a high-temperature gas-cooled reactor (HTGR) fuel refabrication facility for HTGR fuel rods. Refabricated HTGR fuel rods will contain from ~0.15 to 0.5 g ^{233}U and/or ^{235}U. The fuel rods are ~16 mm in diameter and 62 mm long. A typical commercial fuel refabrication facility will have six fuel rod production lines, each producing approximately one fuel rod every 4 sec at design capacity. One on-line assay device will be present for each two production lines. The relative standard deviation in an individual fuel rod fissile material measurement must be less than 3% to satisfy process and quality control requirements. Systematic errors must be kept less than ~0.3% for fissile material measured in fuel rods produced over two months to satisfy material accountability requirements.

Several nondestructive assay (NDA) methods were investigated. Because the gamma-ray activity of the refabricated fuel is relatively high due to the presence of ^{232}U in the fuel and because the gamma-ray activity is not directly related to total or fissile uranium content, NDA methods employing gamma-ray detection did not appear practicable. A method using thermal neutron irradiation and fast-fission neutron detection was selected. An experimental assay device was fabricated based on this NDA method. Experiments were performed to determine the precision and accuracy of the measurements and to investigate potential interferences and systematic errors. In addition, operating procedures were evaluated, and analysis procedures were identified.

Based on the results of these experiments, a conceptual design for an on-line production assay device was prepared which is capable of satisfying the criteria for the fuel rod assay

---

*Operational Analysis and Planning, Oak Ridge Gaseous Diffusion Plant.

†On loan from Engineering Technology Division.

‡Instrumentation and Controls Division.

§On leave of absence to South Carolina Energy Research Institute, Columbia.

device for an HTGR fuel refabrication facility. Operating and analysis procedures useful for on-line assay are also described in the report.

Keywords: nondestructive assay, ^{233}U measurement, ^{235}U measurement, HTGR, reactors, fuel refabrication, prompt neutrons, ^{252}Cf, fissile materials, neutron sources, material accountability, quality control, and process control.

---

1. INTRODUCTION

This report describes work performed in support of the High-Temperature Gas-Cooled Reactor (HTGR) Fuel Refabrication Development Program. The objective of this work was to develop an on-line assay machine capable of measuring the fissile content of HTGR fuel rods with sufficient speed and accuracy to satisfy material accountability, process, and quality control requirements for an HTGR fuel refabrication production plant, which is described in the next section of the report.

The properties of HTGR refabricated fuel influence the selection of the assay method, while the material flow rates of the plant determine the assay speed required. In the following two sections, selection of an assay method and design of an experimental assay device based on this selection are described. Following this, results of tests performed to evaluate the accuracy and precision of the experimental assay device are presented. Operating procedures are also evaluated. In the concluding sections of the report, a design of an on-line production assay machine is described, based on work with the experimental device. In addition, analysis procedures useful to on-line assay are presented.

2. DESCRIPTION OF AN HTGR FUEL REFABRICATION PLANT

In the HTGR fuel refabrication facility, ^{233}U and ^{235}U from spent HTGR fuel elements are recovered and used to fabricate new elements. A typical facility will have six fuel rod production lines, each line having a design capacity of 20,000 fuel rods per 24 hr.[1] The fuel rod flow from two production lines will be routed to one on-line assay device. This corresponds to assaying one fuel rod every 2.2 sec. A typical commercial HTGR fuel element contains ~1600 fuel rods. Thus, at the design capacity, the facility could produce about 73 elements daily.

Fuel rods are produced in the following manner. Coated fissile and fertile microspheres (~660 and 800 μm in diameter, respectively) are blended with carbon shim particles and dispensed in a rod mold. A solid pellet of matrix material consisting of petroleum pitch, a mold lubricant, coke yield additive, and graphite flakes is heated and injected into the mold. The matrix material, which is injected into the void volume of the packed particle bed, solidifies and binds the particles into the form of a fuel rod. The fuel rods are then removed from the mold. Fuel rods for the Fort St. Vrain Reactor (FSVR) have a diameter of 12.4 mm and a length of 49.3 mm. The fuel rods for commercial HTGRs have a diameter of 15.8 mm and a length of 61.9 mm and will contain about 0.15 to 0.5 g of fissile material, depending on their position in the reactor core. After removal from the mold, the fuel rods are inspected for mechanical integrity and fuel homogeneity and assayed before being inserted into graphite fuel elements and carbonized in place.

The fissile material in the refabricated fuel will be primarily ^{233}U produced from conversion of ^{232}Th in the reactor. Some ^{235}U will be present because of successive neutron captures by ^{233}U and ^{234}U in the reactor, and some will be present from unburned ^{235}U initially in the fuel. In addition, ^{235}U may be used as feed material in the refabrication plant. Therefore, a wide range in $^{233}U/^{235}U$ ratios is expected to be encountered during operation of the refabrication plant. Assay methods must be adaptable to either ^{233}U or ^{235}U fuels, and assay methods that can discriminate between the two fissile isotopes would be particularly useful.

The uranium isotope ^{232}U is produced along with ^{233}U in the reactor because of (n,2n) reactions with ^{233}U and (n,2n) reactions with ^{232}Th followed by (n,γ) reactions with ^{231}Pa. Neutron capture reactions with ^{230}Th, followed by neutron captures in ^{231}Pa, are also responsible for some ^{232}U production. Due to these production methods, the uranium in a refabrication facility may contain from 100 to 1500 ppm ^{232}U. The isotope ^{232}U is important in this work because the gamma-ray activity of ^{232}U and its decay products is sufficiently high to influence the selection of the assay method.

The isotope ^{232}U has a 72-year half-life and decays by alpha emission to ^{228}Th, as shown in Fig. 1. The ^{228}Th isotope has a 1.9-year half-life and also decays by alpha emission. Following ^{228}Th, the nuclides in the decay chain have relatively short half-lives and are in secular equilibrium with ^{228}Th. The decay chain ends with the stable nuclide ^{208}Pb. The nuclide ^{208}Tl, which is in the decay chain, is particularly important because it emits highly penetrating 2.61-MeV gamma rays. Because the gamma-ray activity of the decay chain increases as ^{228}Th increases, the gamma-ray activity of uranium containing ^{232}U increases with time after chemical separation. The time dependence of this activity increase is determined primarily by the half-life of ^{228}Th, which is 1.9 years. For an initially pure 0.5-g sample of ^{233}U with 1000 ppm ^{232}U, the dose rate from a point source at a distance of 20 mm increases from about 1.1 rad/hr for a 60-day decay period to about 3.7 rad/hr for a 180-day decay. Because of the high gamma-ray activity of ^{233}U fuels and the increase in this activity with time after chemical processing, many conventional assay techniques are not applicable to ^{233}U fuels.

A more detailed description of HTGR fuel and of HTGR fuel refabrication facilities is given in Ref. 2.

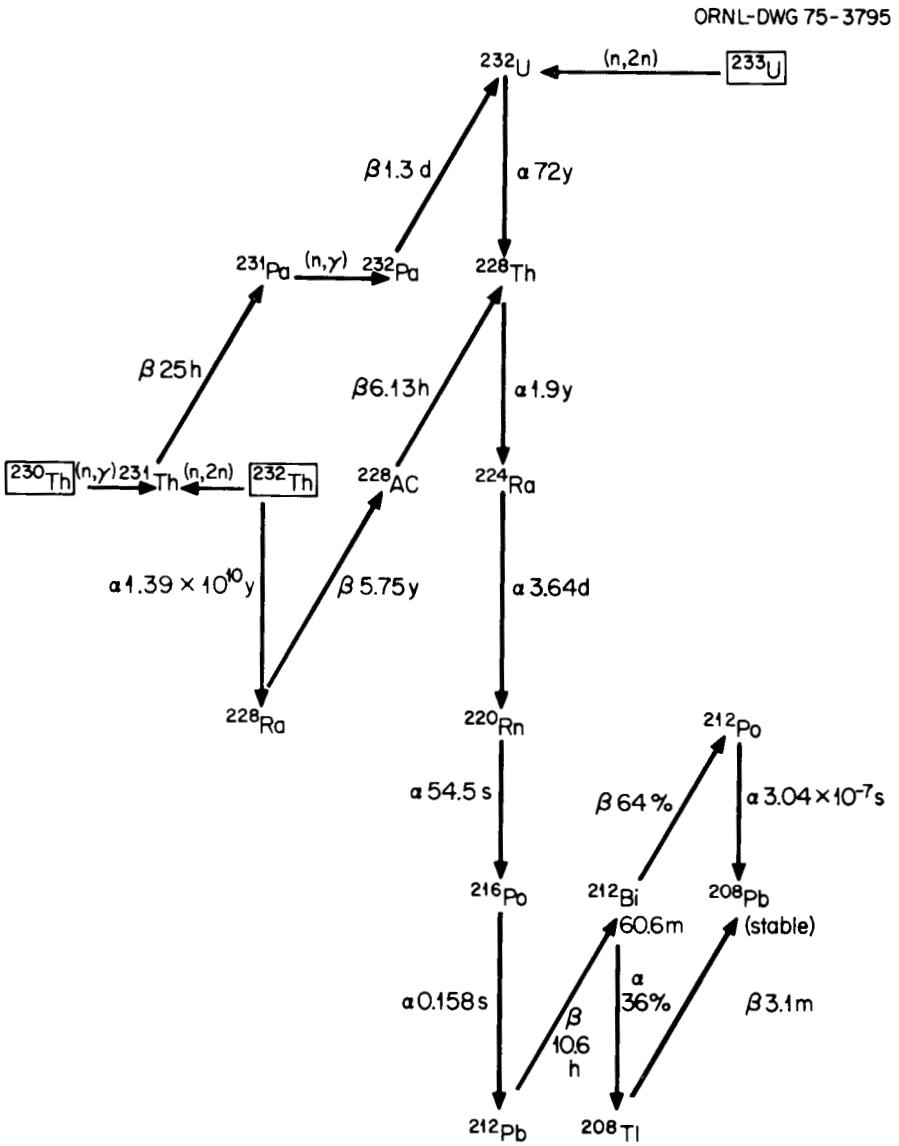

Fig. 1. Decay chains of ^{232}Th and ^{232}U.

3. SELECTION OF ASSAY METHOD

A number of NDA methods were studied for fissile material measurement of refabricated HTGR fuel rods.[2] Many techniques, especially those using gamma-ray detection, are not applicable because of the interference from the intense gamma-ray background originating from ^{232}U in the fuel. Because the gamma-ray activity of ^{233}U fuels is primarily due to the decay products of ^{232}U, gamma-ray measurements cannot be related to fissile content unless precise data are available on isotope ratios and on the history of chemical processing, which may preferentially remove some ^{232}U decay products. The assay technique chosen, therefore, had to be relatively insensitive to a high gamma-ray background. Consequently, neutron-based assay methods were investigated for this application. The spontaneous fission yields of ^{233}U and ^{235}U are too low to be of practical value, and the yield of (α,n) neutrons is dependent on the concentration of ^{232}U and its decay products. Thus, neither of these passive neutron methods was considered feasible for fuel rod assay. Additional details on gamma-ray and neutron emissions from ^{233}U fuels are given in Ref. 2.

Major consideration focused on (1) methods based on interrogation of fuel rods with neutrons or gammas and (2) detection of prompt or delayed neutrons from fissions induced in the fuel materials. Photofission methods were not investigated in detail because of the complexity of the photon sources required to distinguish fissile from fertile nuclides. The neutron interrogation methods that were studied included techniques based on ^{252}Cf, photoneutron sources, and (α,n) sources. Either fast or thermal neutron irradiation was feasible; however, a method based on thermal neutron irradiation was selected for the following reasons.

1. The fuel rods contain hydrogen, and the thermal neutron irradiation minimizes the sensitivity of the method to variations in hydrogen content.
2. The large throughput rates required of the method lead to a need for high count rates, which can be achieved most readily with thermal neutron sources.

3. The method was designed to determine fissile content of ^{233}U- and ^{235}U-loaded fuel rods. Thus, the irradiating neutrons must be below the fission thresholds of ^{234}U, ^{236}U, and ^{238}U. Thermal neutrons satisfy this requirement.
4. There is a considerable body of experience with LWR fuel rod scanners that are based on thermal neutron irradiation.

For thermal neutron irradiation, the detected signal could have been either delayed or prompt neutrons. Prompt neutrons were selected because both ^{233}U and ^{235}U would then yield nearly equal response and because the prompt neutrons could be detected during the irradiation with thermal neutrons. Thus, a continuous neutron source could be used and the mechanical complexity of the technique minimized by not requiring that the source or sample be moved between irradiation and delayed neutron counting. The method selected for experimental study was based on a moderated ^{252}Cf source as the neutron irradiator and on fast-fission detection using proportional counters.

4. EXPERIMENTAL ASSAY DEVICE

4.1 Description

4.1.1 Design

An experimental assay device, similar in structure to an assay device developed at Los Alamos Scientific Laboratory for assay of light-water reactor (LWR) fuel rods,[3] was designed and fabricated based on thermal neutron irradiation and prompt fission neutron detection. Schematic diagrams of the experimental prompt neutron assay device are given in Figs. 2 and 3. A ^{252}Cf neutron source is positioned in the center of

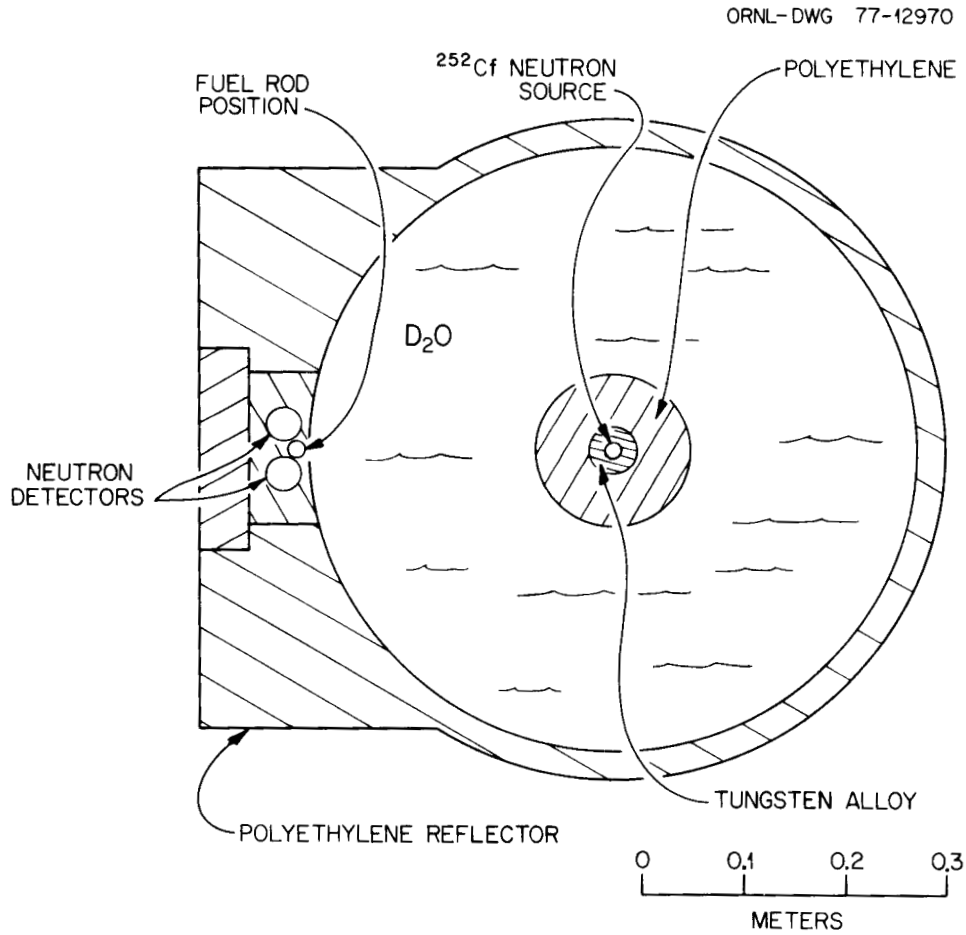

Fig. 2. Cross-sectional view of the HTGR fuel rod nondestructive assay device.

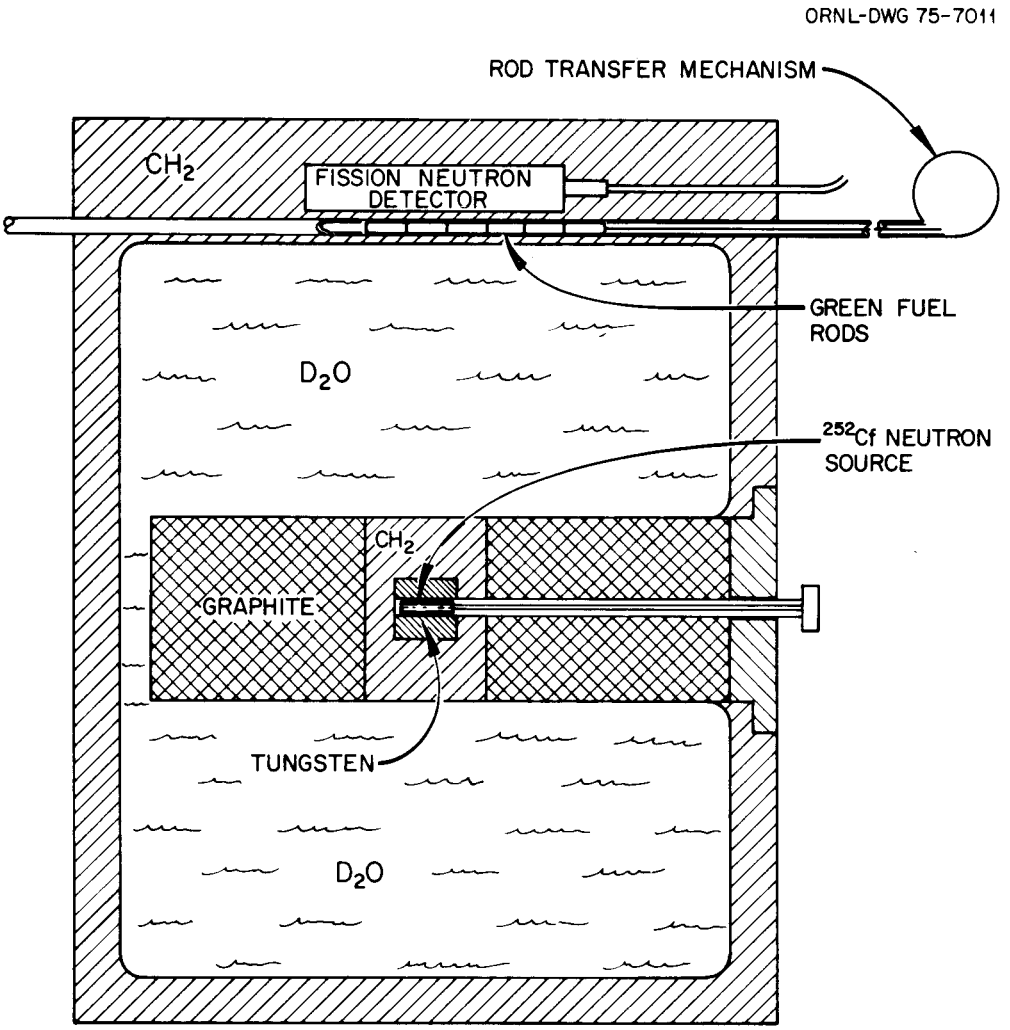

Fig. 3. HTGR fuel assay development device prompt fissile neutron configuration.

a cylindrical drum about 0.6 m in diameter and 0.6 m long. Surrounding the neutron source are annular regions of 18.3-mm tungsten, 23.4-mm polyethylene, and 250-mm heavy water (D_2O), respectively. The tungsten region shields source gammas and moderates the high-energy source neutrons through inelastic scattering. The polyethylene and heavy water further thermalize the source neutrons. The neutron source can be positioned off-center to study the effect of source-sample distance. Figure 4 is a photograph of the assay device.

A polyethylene shell at the drum surface contains holes for the detector tubes and fuel rod samples. The arrangement of these holes is

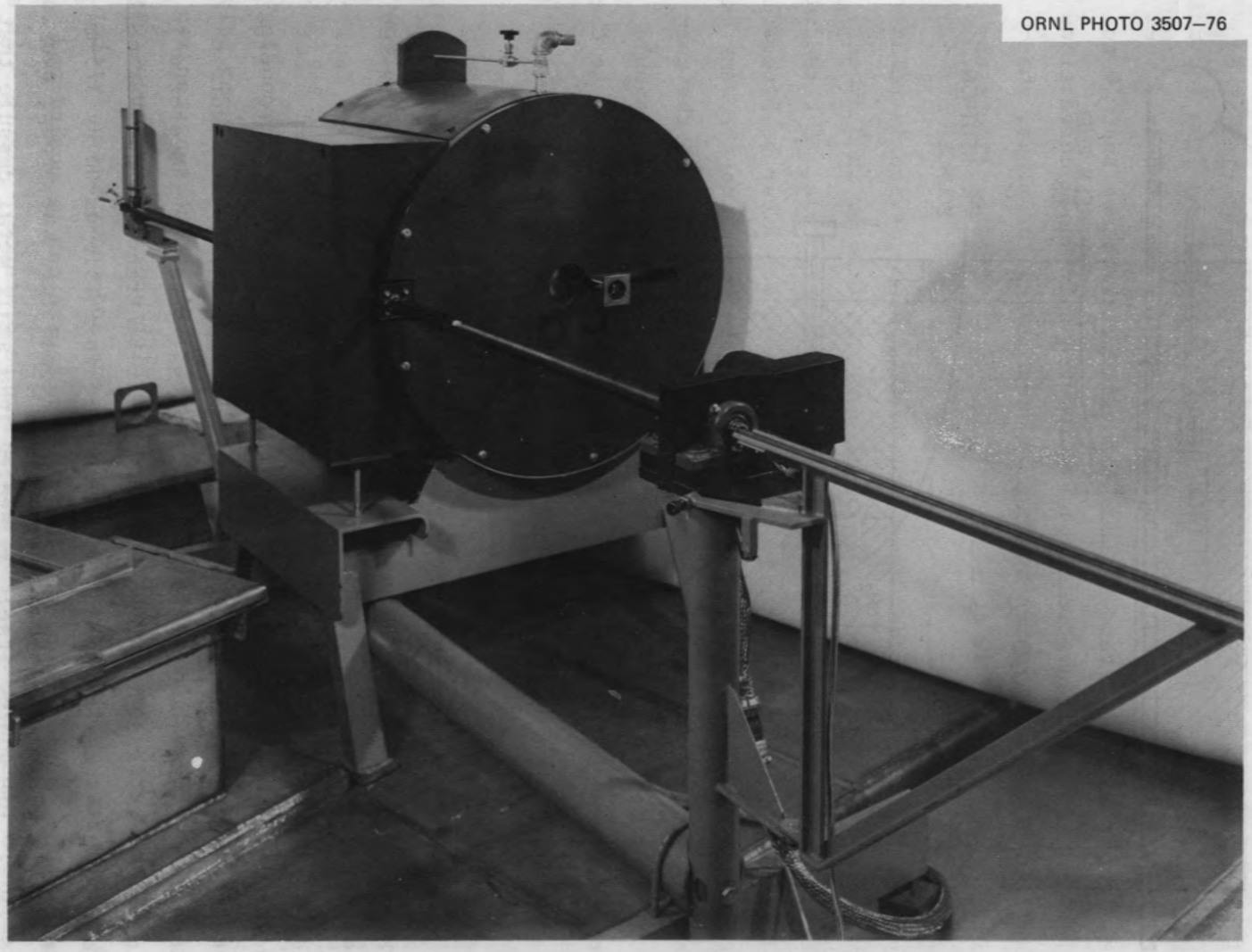

Fig. 4. Experimental assay device.

shown in detail in Fig. 5. In the experimental assay device, only one set of such holes was used, except during experiments to study interference effects between fuel rod holes. A production device will have a series of such channels at equal angular spacings around the drum for multiple fuel rod assays. Based on results of multiple, simultaneous, fuel rod assay experiments (to be described later), estimates are that 10 to 12 fuel rods could be assayed simultaneously with only small corrections to be applied for interferences between adjacent channels. Thus, channels will be spaced about 30 to 36° apart on a production on-line assay device.

Operation of the experimental prompt neutron assay device is relatively simple. A fuel rod sample (49.3 mm long and 12.4 mm in diameter) is loaded into a grooved track that leads to the sample hole. A threaded rod driven by a stepping motor advances the sample, which can be precisely positioned (to within 25 μm) at any point along the track, to the desired position between the detectors. After the sample is located in the correct position, counts are accumulated for a specified time. The sample is then translated through the device and the next sample loaded onto the track. For a sample containing 0.45 g ^{235}U or ^{233}U, the number of counts collected from detection of fission neutrons released by the sample is approximately equal to the number of background counts collected from detection of ^{252}Cf source neutrons.

The experimental assay device is located in the Thorium-Uranium Recycle Facility (TURF) at Oak Ridge National Laboratory (ORNL). To facilitate design changes and to protect personnel from the unshielded ^{252}Cf neutron source when experiments are being conducted, the device is situated in an uncontaminated shielded hot cell (Hot Cell B). When not in use, the ^{252}Cf source can be removed from the assay device and stored in a biologically shielded tank, thus allowing safe entrance to the hot cell.

The ^{252}Cf neutron source is contained within a 15.9-mm-OD by 375-mm-long stainless steel tube, which can be positioned into the prompt neutron assay device. The source itself is sealed in a small metal capsule that is screwed to the end of a polyethylene rod. The rod is sealed in the stainless steel source tube. On July 1, 1978, the source had an activity

ORNL-DWG 77-12969

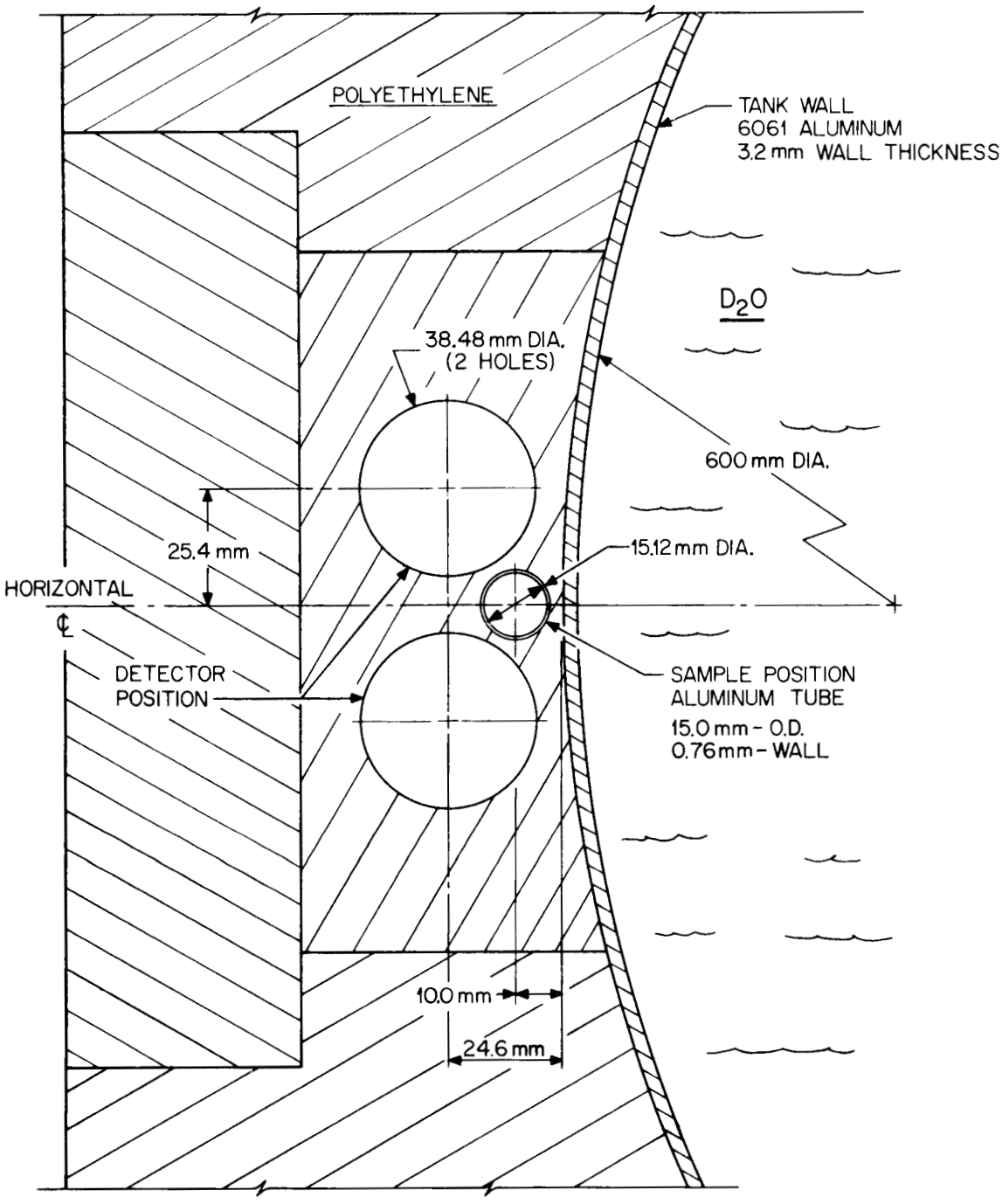

Fig. 5. Sample and detector positions in the fuel rod assay device.

of about 1.4×10^9 neutrons/sec. The half-life of ^{252}Cf is 2.63 years, and its specific activity is about 2.3×10^{15} neutrons/sec^{-1} kg^{-1}.

4.1.2 Electronics

The counting instrumentation is located outside the hot cell and is pictured in Fig. 6. A block diagram of the instrumentation is given in Fig. 7. Signals from the discriminator can be sent to a Tracor Northern (TN-1700) multichannel analyzer. A Data General Corporation NOVA computer operates the TN-1700 and can be programmed to analyze the counting data.

4.1.3 Detectors

The fast neutron detectors were manufactured by Reuter-Stokes. They have an active length of 152.4 mm and a diameter of 38.1 mm and are filled with ^4He gas at 1520-cm Hg absolute pressure. Detectors with anode diameters of 25 and 50 μm were tested.

The two detectors at each fuel rod channel are coupled together at the distribution box and can be operated off one high-voltage supply. In the distribution box, the neutron pulse signals from both detectors are connected together and ac coupled to a common preamplifier. The detectors containing the 25-μm-diam anode wires were operated at 2570 V, while the large anode detectors required a higher voltage of 3550 to achieve approximately the same gas amplification.

Experiments were performed to determine the gamma sensitivity of the detectors at various gamma-ray dose levels. Presented in Figs. 8 and 9 are experimental results for a radiation level of 10 rad/hr at the detectors for 25- and 50-μm anode detectors, respectively. The electronic amplifier was operated with a very short resolving time constant of 0.25 μsec and in a bipolar mode to reduce the gamma pulse pileup problem. These parameters gave the best ratio of neutron pulse amplitude to gamma pulse pileup for the detectors used. The gamma-ray source was ^{60}Co, and the neutron source was ^{252}Cf. At high discriminator settings, no gamma rays are being counted. However, the count rate from neutrons is lower when the detectors are simultaneously being irradiated with gamma rays. This effect is caused by increased ionization in the chamber; ions tend

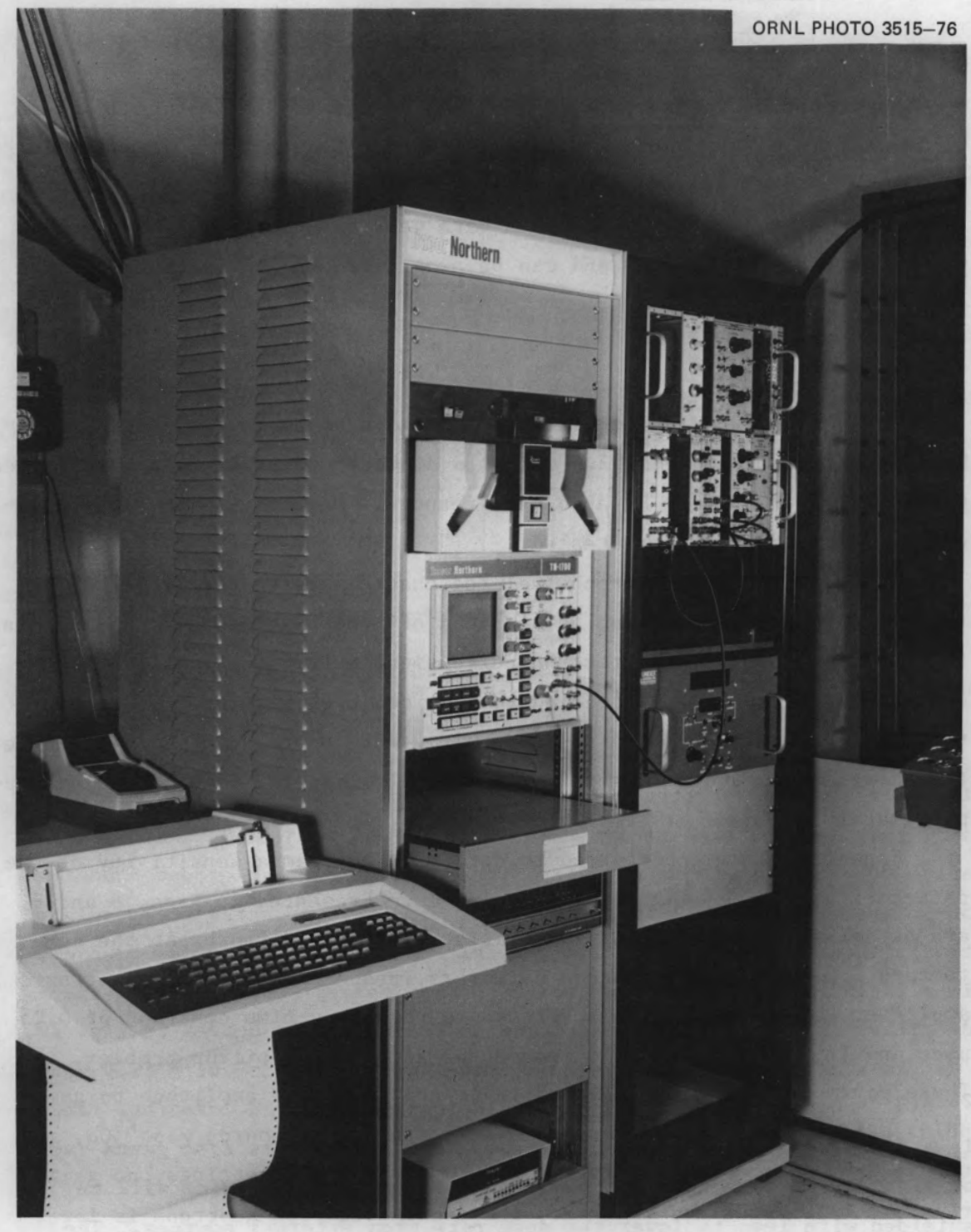

Fig. 6. Counting instrumentation for experimental assay device.

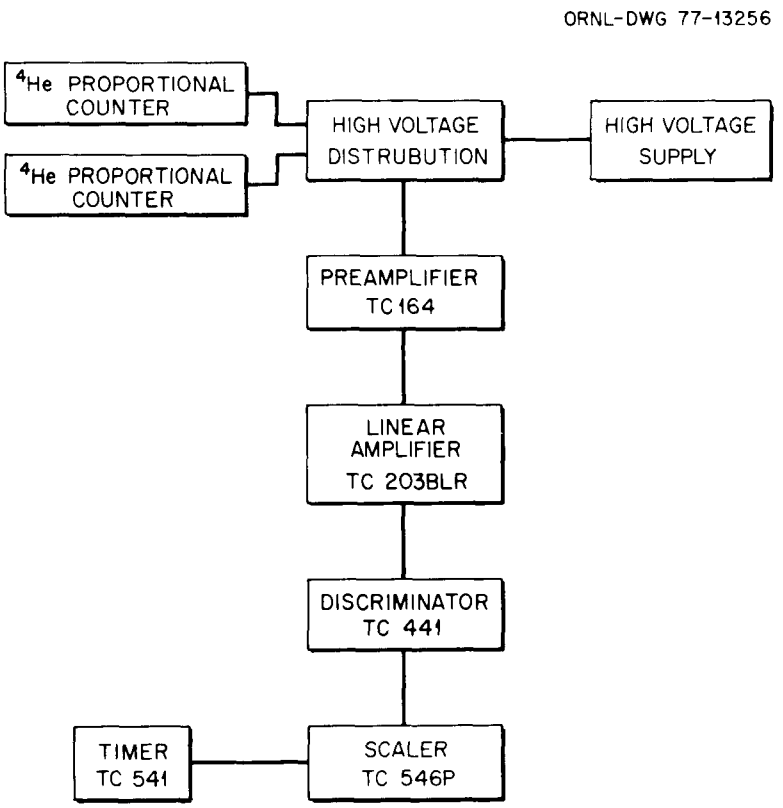

Fig. 7. Block diagram of neutron detection instrumentation for the nondestructive assay system.

to recombine before being collected, thus lowering the pulse amplitude and, therefore, the count rate. As seen in Figs. 8 and 9, the smaller anode detectors are more sensitive to the gamma-ray background than the 50-μm anode detectors. The 50-μm anode detectors appeared to be relatively insensitive, even in a 10-rad/hr gamma-ray background. However, in a 25-rad/hr gamma-ray background, the gamma-ray sensitivity of these detectors is appreciably greater, as indicated by the curves in Fig. 10.

As stated previously, the dose rate from 0.5 g ^{233}U with 1000 ppm ^{232}U at a distance of 20 mm after a 180-day decay is ~3.7 rad/hr. This is a conservative estimate of the dose at the detectors from gamma rays originating from the fuel rods. The production assay device will be shielded with lead to lower the dose rate from external sources. The total dose rate at the detectors is expected to be less than 10 rad/hr. Based on the previous experiments, the 50-μm-diam anode ^{4}He detectors will

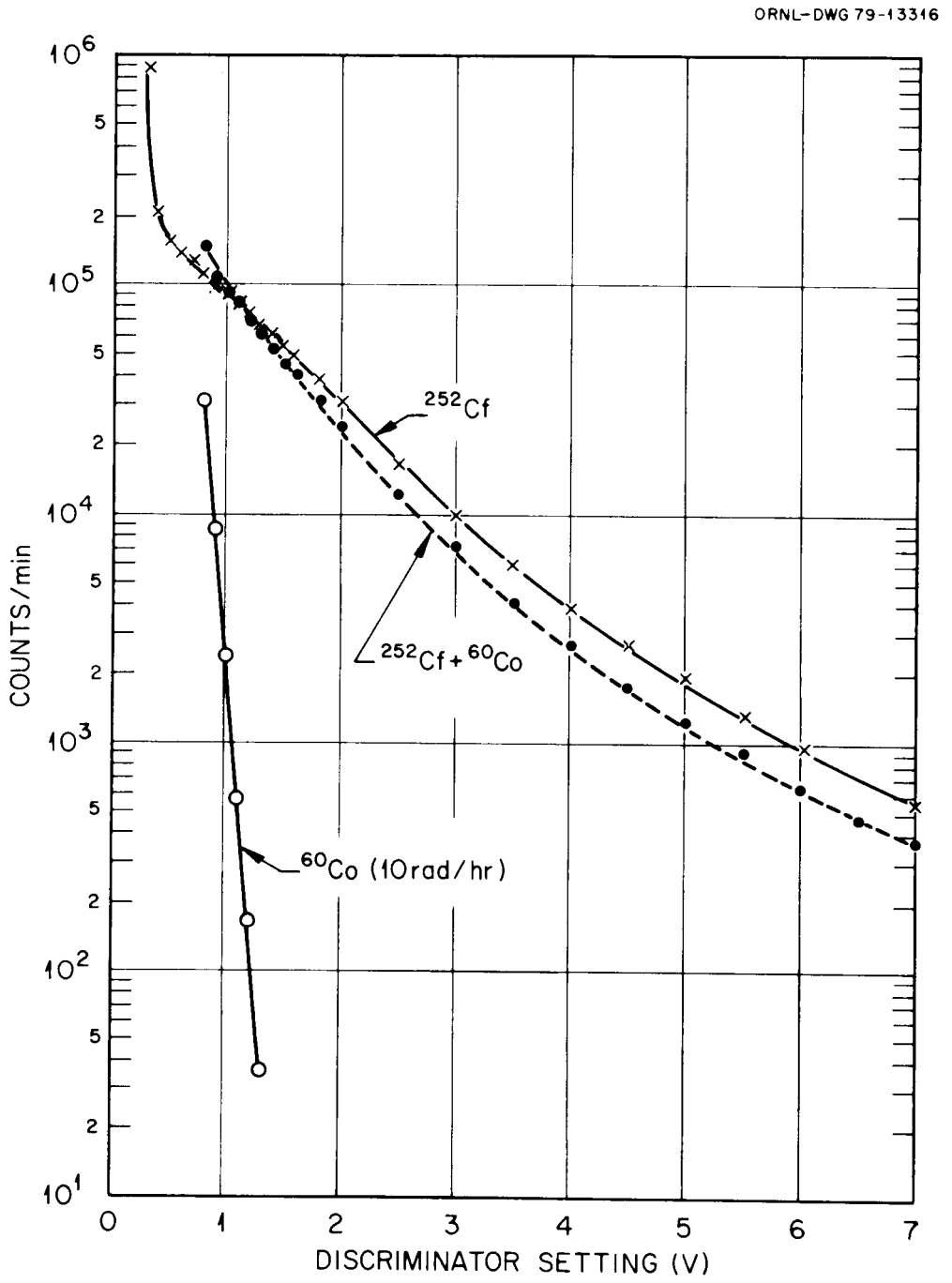

Fig. 8. Gamma sensitivity of 25-μm anode ^{4}He detectors in 10-rad/hr gamma field.

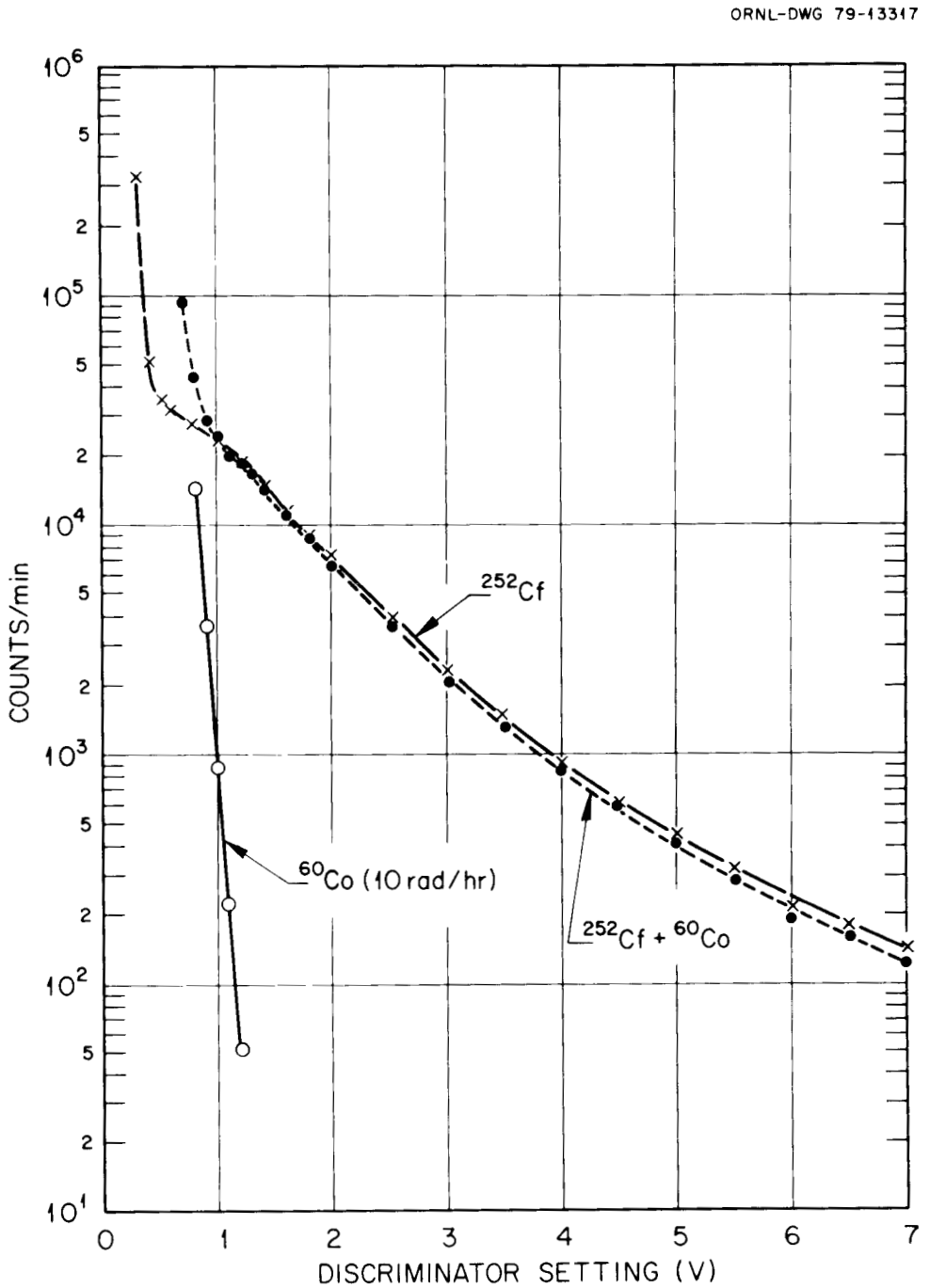

Fig. 9. Gamma sensitivity of 50-μm anode ^{4}He detectors in 10-rad/hr gamma field.

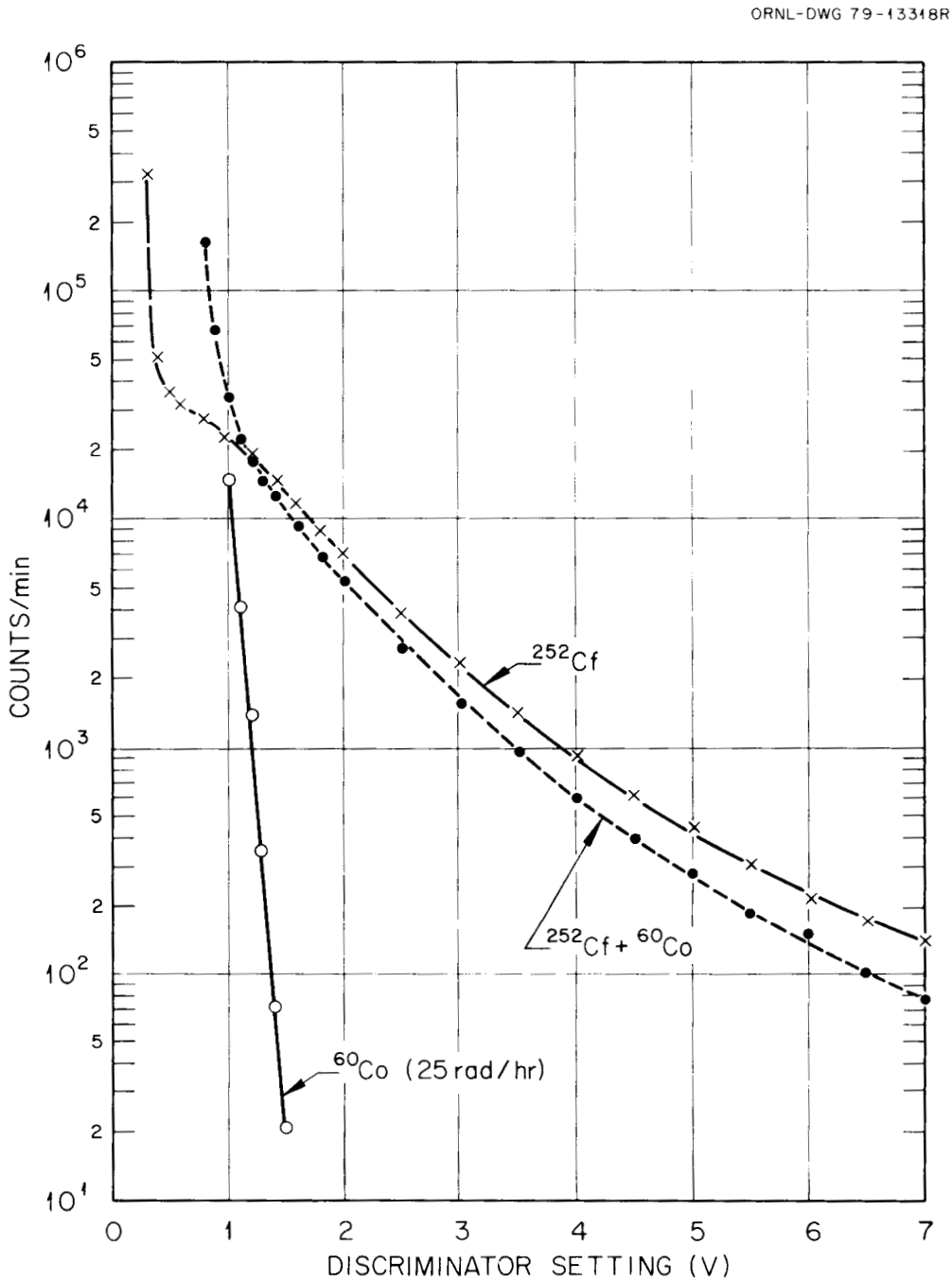

Fig. 10. Gamma sensitivity of 50-μm anode ^{4}He detectors in 25-rad/hr gamma field.

apparently give satisfactory performance in this gamma-ray background level.

The ^{4}He detectors are slightly affected by changes in temperature. The count rate increases by about 0.2% per degree Centigrade. Rapid fluctuations in detector temperature should be limited by the thermal inertia of the neutron moderator, and analysis procedures have been developed to correct for small drifts in count rate with time.

4.2 Precision and Accuracy

4.2.1 Precision

The relative standard deviation of a Poisson distribution is the inverse of the square root of the mean of the distribution. The precision of the measurement therefore is limited by the number of counts obtained during the counting interval. The following relationships can be applied to analyze the counting data obtained with the assay device.

Let C equal total counts, which is fuel rod plus background counts, and let B equal background counts; then, $C - B$ is background-corrected counts. The standard deviation in background-corrected counts is $\sqrt{C + B}$, and the relative standard deviation is $\sqrt{C + B}/(C - B)$. With a 1-mg ^{252}Cf source, 0.45-g fissile material in the fuel rod, and a 10-sec counting period on the experimental assay device, C is about 20,000 counts and B is about 10,000 counts. The relative standard deviation in the measurement is 1.7%. The high background is caused by high-energy source neutrons that have penetrated the moderator materials and are detected by the ^{4}He detectors.

Throughout this work, a number of experiments were performed with various fissile particle sizes and densities, fuel rod loadings, and fissile isotopic contents. For all experiments, one form of calibration equation fits each set of count rate vs fissile content data very well. This calibration equation is given as

$$C = a[1 - \exp(-bU)] \ , \tag{1}$$

where

C = background-corrected count rate,

U = fissile content (either ^{233}U, ^{235}U, or a known mixture of the two),

a and b = calibration constants (measured by means of calibration standards).

The inverse of Eq. (1) gives the fissile content as a function of count rate.

$$U = -\frac{1}{b} \ln[1 - (C/a)] \ . \tag{2}$$

The constant a is generally much larger than C, so Eq. (2) can be approximated by

$$U \approx C/ab \ . \tag{3a}$$

Then, because the calibration constants are fixed,

$$\sigma_u/U = \sigma_c/C \ . \tag{3b}$$

The expressions σ_u/U and σ_c/C are relative standard deviations of fissile content and count rate, respectively. Therefore, a 1.7% relative standard deviation in count rate introduces a 1.7% relative standard deviation in fissile content.

4.2.2 Accuracy

The accuracy of a given measurement is influenced by random errors (a very precise measurement has small random errors) and by systematic errors. Reducing systematic errors to low values is important because systematic errors do not diminish with the number of measurements. Conversely, random errors are less important because they tend to decrease with the number of measurements. For example, assume that each fuel rod is measured with a relative standard deviation of 2.1% with a 2% contribution due to random errors and 0.1% due to systematic errors. If 10,000 rods are assayed, the relative standard deviation in the total fissile content of the 10,000 rods is 0.12%. The relative standard deviation due

to random errors has decreased by $\sqrt{10,000}$ to 0.02%, but the contribution due to systematic errors remains unchanged (at 0.1%) by the number of measurements. The accuracy of the total fissile content of a large number of measurements, therefore, is limited primarily by systematic errors.

Systematic errors are mainly a result of the calibration standards not accurately representing the samples or fuel rods. The calibration equation is assumed to be exact and is based on measurements of the calibration standards. Any systematic deviation between samples and calibration standards will result in higher or lower count rates, and use of the calibration equation will lead to systematic errors in the measurements.

Through processing or feed material changes, small changes in the composition of the fuel rods will likely occur. In HTGR-refabricated fuel, the fissile particle size and density may vary slightly as feed material changes or as fabrication processes change with time. The $^{233}U/^{235}U$ ratio will vary, depending on feed material composition. The hydrogen content of the fuel rods may vary, also. In addition, the fissile particles dispensed into the fuel rods may develop a regular nonuniform fissile material distribution. To minimize systematic errors, the fissile material measurements should be fairly insensitive to these small processing changes.

Several experiments were performed to determine the sensitivity of the measurements of the experimental assay device to the variations listed above. Descriptions of the experiments and the experimental results are covered in the remainder of this section.

4.2.2.1 Effect of kernel size and density. Experiments were performed to evaluate the effect of fuel kernel size and density variations on the response of the experimental assay device. Calibrated fuel rod standards were fabricated with kernels of various densities and diameters, as specified in Table 1. The fuel rods had loadings ranging from 0.1 to 0.5 g ^{235}U. For comparison purposes, the background-corrected counts for fuel rods containing 0.25 g ^{235}U are included in Table 1.

Each set of data fits the calibration equation [Eq. (1)] quite well. For the ^{235}U kernel density of 2.23 mg/m^3 and the ^{235}U kernel density of 8.34 mg/m^3, the calibration constants a and b are 528,376 and 0.611348

Table 1. Effect of kernel density and size on count rate

Kernel batch	^{235}U kernel density (mg/m^3)	^{235}U kernel diameter (μm)	Background-corrected counts per 100 sec for a fuel rod containing 0.25 g ^{235}U
1	2.23	352	74,887
2	8.34	203	69,483
3	1.63	375	75,008
4	1.63	440	74,161

for the low-density kernels and 440,456 and 0.686727 for the high-density kernels. The calibration curves for these two cases are given in Fig. 11. As expected, the standards composed of high-density kernels gave a lower response than standards composed of low-density kernels. This is due to the higher neutron self-shielding property of the high-density kernels. A larger particle size has a similar effect.

Two groups of fuel rods were fabricated using ^{235}U kernels with a density of 1.63 mg/m^3 but with diameters of ∿375 and ∿440 μm. These are specified in Table 1 as kernel batches 3 and 4, respectively. The measured net counts per gram of ^{235}U were ∿1% less for fuel rods composed of the smaller kernels. Thus a 17% change in average fissile kernel diameter causes a 1% effect on assay accuracy for a given calibration.

However, production variations may cause diameter and density to vary simultaneously. If density decreases and diameter increases (or vice versa), the self-shielding effects will tend to cancel. If both increase or decrease simultaneously, the self-shielding effects will be additive. For the general situation, keeping the total fuel rod fissile content constant, the count rate per gram of fissile material as a function of fissile particle diameter and density can be expressed as

$$C/\mathrm{U} = A - B\rho d \ , \tag{4}$$

where

A and B = constants,

C/U = count rate per gram of fissile material,

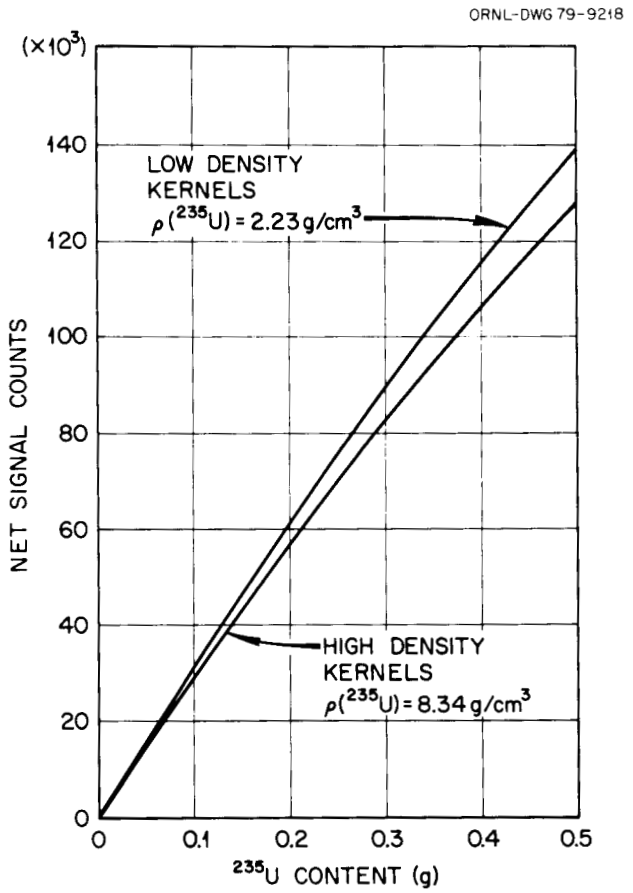

Fig. 11. Calibration curves for fuel rods composed of high and low density fuel kernels.

ρ = ^{235}U kernel density,

d = ^{235}U kernel diameter.

This equation can be derived from basic physical considerations as follows: for each fissile kernel in the fuel rod, the count rate can be expressed as

$$C = a_1 U \bar{\phi} , \tag{5}$$

where

C = count rate per kernel,

U = fissile content per kernel,

a_1 = constant,

$\bar{\phi}$ = average neutron flux in the kernel.

Using Nisle's self-shielding formula,[4] which assumes that the kernel is purely absorbing and all neutrons passing through the particle traverse the average chord length of the kernel, Eq. (6) is obtained.

$$\bar{\phi} = \frac{\phi_0}{a_2 \rho R_{av}} [1 - \exp(-a_3 R_{av} \rho)] , \tag{6}$$

where

a_2 and a_3 = constants,

ϕ_0 = neutron flux in a nonabsorbing kernel,

R_{av} = average chord length = (2/3)d.

Substituting Eq. (6) into Eq. (5) and expanding the exponential, Eq. (4) is readily obtained. [Note that Eq. (1) can be derived in a similar manner by using count rate per fuel rod and average flux in the fuel rod.]

In Eq. (4), the constant B is positive; thus, as ρd increases, the count rate decreases due to increasing self-absorption in the fuel rod for the same uranium content of the fuel rod. Fitting the data given in Table 1 to Eq. (4), A = 78,315, B = 5.1812, and the coefficient of determination is 0.97. For ρd = 652, a 20% increase or decrease in ρd results in about a 1% respective decrease or increase in count rate per gram of ^{235}U.

4.2.2.2 Effect of $^{233}U/^{235}U$ isotopic ratio. Measured count rates are expected to differ for fuel rods having the same fissile content but different $^{233}U/^{235}U$ fissile isotopic ratios. The isotopes ^{233}U and ^{235}U have different fission cross sections, and the number of neutrons released per fission are different for the two isotopes. However, as part of an experimental investigation to determine an NDA method for fissile isotopic measurement of ^{233}U-^{235}U fuels,[5] the count rates obtained with the experimental assay device were found to be fairly insensitive to the relative amounts of the two fissile isotopes. A 10% variation in the $^{233}U/^{235}U$ ratio, about a ratio of 1.0, gave a percentage variation in estimated total fissile content of only 0.05%. Count rate data obtained for various

fuel rod loadings and $^{233}U/^{235}U$ ratios are plotted in Fig. 12. The line in the figure passes through the average of the points shown. Included for reference in Appendix A are experimental results of the investigation into the nondestructive fissile isotopic measurement of ^{233}U-^{235}U fuels.

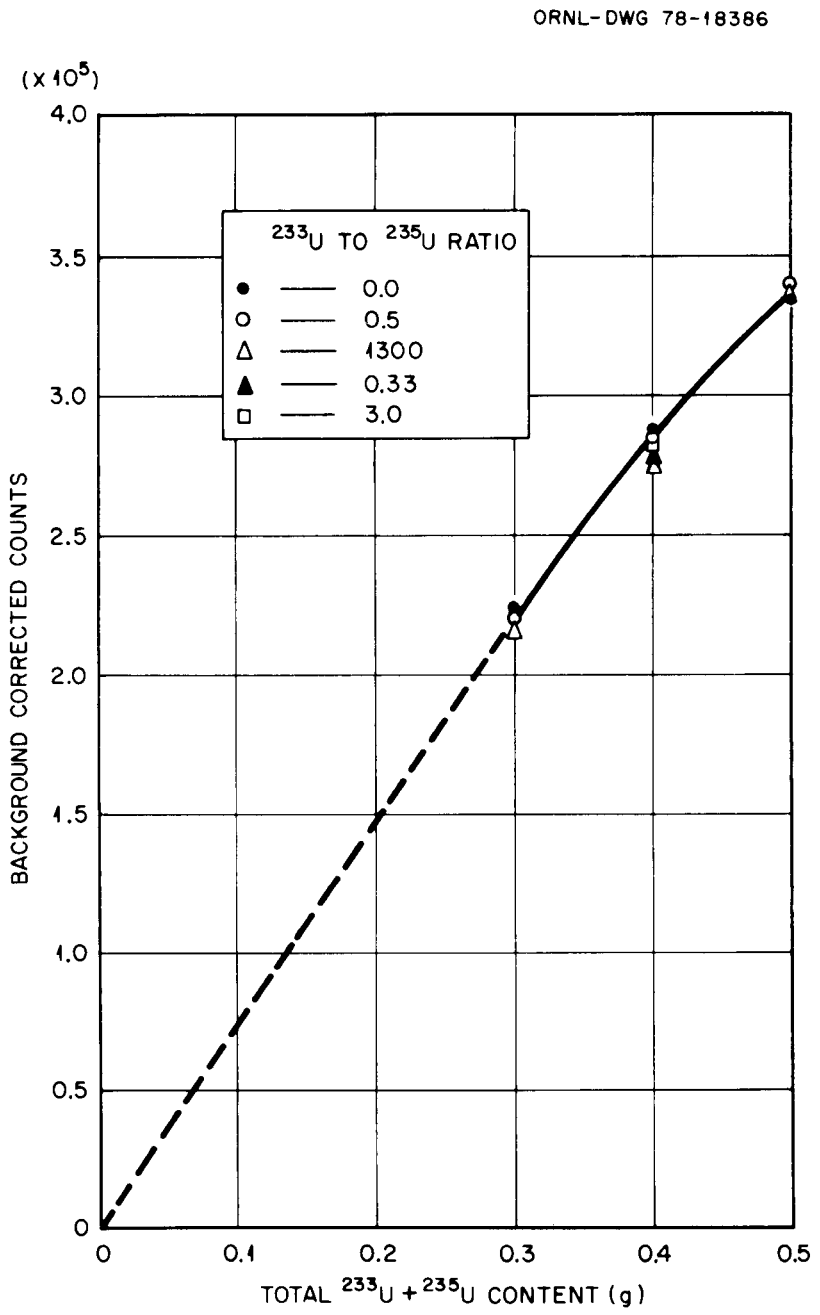

Fig. 12. Prompt neutron counts vs sample fissile content.

4.2.2.3 Effect of fuel inhomogeneity. Inaccurate assay of fissile content in fuel rods can also occur if the fissile material, that is, the fissile particles, are poorly distributed in the rod. The count rate per unit length varies along the length of the fuel rod due to source-detector geometry effects. The count rate per unit length dependence on position can be closely described by a cosine function, as in Eq. (7).

$$C(x) = A \cos ax \ , \tag{7}$$

where

$C(x)$ = count rate per unit length as a function of position x,
a and A = constants.

The constant a was experimentally determined to be $\sim$0.016/mm. For a 62-mm-long fuel rod, the count rate per unit length is 12% lower at the ends than at the center. For a 5% linear increase or decrease in axial fissile content from center to ends, the result is a 0.06% error in the estimated fissile content of the fuel rod. A process variation of 2.5% linear variation would produce a 0.03% error in estimated fissile content.

The magnitude of process variations in axial fissile distribution is dependent on the particle blending method used. Several blending methods investigated appeared to produce a homogeneous particle distribution in the fuel rod. However, for one blending method investigated, the fissile particles were observed to distribute themselves consistently in a particular nonuniform distribution in the fuel rod.[6] The particles were distributed so that the ratios of fissile density per unit length to average fissile density per unit length from top to bottom of the fuel rod at quarter intervals were 0.957, 0.991, 1.061, and 0.991. This fissile particle distribution will be used to estimate conservatively the resulting systematic error in fissile material measurements. Using Eq. (7) with a = 0.016/mm, the average responses for each quarter length of a 62-mm-long fuel rod are 0.9292, 0.9898, 0.9898, and 0.9292. The relative counting rates for a fuel rod having the fissile distribution described above and a homogeneously distributed standard fuel rod are 0.9603 and 0.9595, respectively. Thus, a maximum systematic error of 0.08% can result from a nonhomogeneous axial fissile distribution.

4.2.2.4 Effect of fuel rod hydrogen content. The fuel rods each contain ∿0.23 g hydrogen before being carbonized in the fuel elements. The hydrogen content of the fuel rods during production is not expected to vary by more than 5%.[7] A systematic variation in hydrogen content may introduce a systematic error in assay results due to several effects. An increase in hydrogen content can change the fission rate in the fuel rod by increasing the thermalization of source neutrons and by increasing the thermal neutron absorption rate in the fuel rod. In addition, fast-fission neutrons produced in the fuel rod have a greater probability of scattering before leaving the fuel rod, thereby losing energy and not being detected by the fast neutron counters.

Changes in fission rate and in nonscattering escape probabilities were calculated for a 5% increase in hydrogen content. Based on these calculations, the total change in count rate due to a 5% change in fuel rod hydrogen content is estimated to be 0.10%.

4.2.2.5 Summary of effects of product variability. Specifications on fissile kernel diameter and density for fuel refabrication are the following.[8]

1. The mean kernel diameter for each fissile particle batch must be $\geq$340 but $\leq$380 μm.
2. The mean density for each batch must be $\geq$3.0 but $\leq$3.6 mg/m^3. The mean density of each kernel batch is sufficiently repeatable that the more stringent density specifications of $\geq$3.15 but $\leq$3.45 mg/m^3 probably can be achieved easily.[9]

Based on this information, a summary of the different process variations and the systematic errors that may be introduced into fissile material measurements of HTGR fuel rods is presented in Table 2. It is estimated that the $^{233}U/(^{233}U + ^{235}U)$ or the $^{235}U/(^{233}U + ^{235}U)$ ratio, whichever is greater, may be in error by as much as 5%. Based on the work reported in Ref. 5, this is a conservative estimate. For a $^{233}U/^{235}U$ ratio of 1.0, this corresponds to an error in the $^{233}U/^{235}U$ ratio of 10%.

Based on the data in Table 2, the maximum systematic error (if all errors are positive or negative) is 1.1%. This is a rather large systematic error for accountability purposes; however, it is not as serious as

Table 2. Process variations and maximum systematic errors in assay results (in percent)

Process variable	Maximum expected systematic variation	Maximum systematic error
Mean diameter of each batch of fissile particles ($\geq$340 but $\leq$380 μm)	5.9 per batch	0.48 per batch
Mean density of each batch of fissile particles ($\geq$3.15 but $\leq$3.45 mg/m^3)	4.8 per batch	0.39 per batch
Uncertainty in fissile isotopic composition (i.e., ^{233}U and ^{235}U composition)	5[a]	0.05
Inhomogeneous fissile particle distribution in fuel rods		0.08
Fuel rod hydrogen content	5.0	0.10

[a]The 5% uncertainty in fissile isotopic composition refers to a 5% uncertainty in the ratio $^{233}U/(^{233}U + ^{235}U)$ or $^{235}U/(^{233}U + ^{235}U)$, whichever is larger.

it first appears. The error given in Table 2 is for fuel rods produced from a given batch of particles. In the refabrication facility, every 24 batches of particles will be blended together. Samples will be routinely drawn from each blended batch and will then be analyzed, and values will be determined for average kernel diameter and density, $^{233}U/^{235}U$ isotopic ratio, and fissile content per gram. Although not considered in this report, such values can be used to correct the assay results for product variability. The mean diameters and densities of particles will vary within the specifications from batch to batch; the mean diameter and density of particles for 24 batches blended together will be near the centers of the respective specification ranges. An estimation of the total fissile material in all the fuel rods produced from 24 batches blended together will have a much lower error than for the fissile content of fuel rods from a given batch of particles. The error in the measured fissile

content of fuel rods from 24 batches of particles blended together is estimated below.

The particle diameters and densities are distributed within batches so that for each batch the mean diameter is $\geq$340 and $\leq$380 μm and the mean density is $\geq$3.15 and $\leq$3.45 mg/m^3. Errors in assay are only systematic for fuel rods composed of a single batch of particles. For assay of multiple batches, the systematic error in one batch appears as a random error when comparing several batches. Assume that the relative standard deviation in this random error is 0.20% due to variations in mean particle density and 0.24% due to variations in mean particle diameter. (This is a reasonable assumption because these values are one-half the maximum expected systematic errors for any batch.) For 24 batches of particles that are blended together, the relative standard deviations in the total fissile material of all the fuel rods assayed are reduced by $\sqrt{24}$. The 95% confidence interval in total fissile material is therefore $\pm 2.0 \sqrt{[(0.0020)^2 + (0.0024)^2]/24}$ or ±0.12%. The three remaining systematic errors listed in Table 2 are added to this, and the 95% confidence interval in the total fissile material measurement of fuel rods produced from a blend of 24 batches is ±0.35%. Note that this analysis assumed that the systematic errors are maximum and are either all positive or all negative; thus, the resulting value of 0.35% is conservative.

4.2.2.6 Comparison of assay and chemical analysis. The ORNL staff had an opportunity to check the accuracy of the fissile material measurements through participation in an assay comparison program between ORNL and General Atomic Company (GAC) in San Diego, California. The GAC staff sent 36 fuel rods of 3 uranium-thorium particle blends to ORNL for comparison of assay and chemical analysis measurements. The approximate ^{235}U and ^{232}Th compositions of the particle blends are given in Table 3. In addition to the fuel rods, the GAC staff also provided particles of the same batch from which the ORNL staff could fabricate standard rods.

Several standard (well-characterized) fuel rods were fabricated, and these were assayed in the experimental NDA device. The results were fit to a calibration equation similar to Eq. (1). The 36 unknown fuel rods were then assayed in the experimental assay device — that is, a delayed

Table 3. Approximate compositions of particle blends (in grams)

Blend	^{235}U content	Thorium content
1	0.16	3.5
2	0.12	4.7
3	0.29	3.6

neutron assay device[10] and, afterwards, chemically analyzed. The results are presented in Table 4.

Despite the wide range of loadings and possible errors introduced by fuel rod handling due to particle loss from the edges of the rods, only seven measurements were outside the 95% confidence interval of the experimental assay device in comparison with the chemical analysis results. (No estimate of the measurement error in the chemical analysis results was available.) If the estimated ^{235}U contents are summed, the totals are identical for assay and chemical analysis: 6.9127 g. No indication of a systematic error was seen in this experiment.

Similar evaluations were performed in conjunction with the Fort St. Vrain Early Validation Irradiation Experiment; these had similar results.[11]

4.3 Operation

4.3.1 Stationary or moving scans

In the experimental assay device, fuel rods could either be placed in a stationary position between the detectors or be moved past the detectors at a constant speed. As mentioned in the previous section, the count rate per unit fuel rod length is dependent on position between the detectors. This has a slight effect on assay accuracy. It was thought that, by moving the fuel rod while assaying, the count rate per unit fuel rod length would be smoothed out to reduce or eliminate this effect on assay accuracy.

The count rate per unit fuel rod length is described fairly accurately by Eq. (7). The constant a in Eq. (7) was determined to be 0.016/mm.

Table 4. Assay and chemical analysis results of 36 unknown fuel rods

Fuel rod identification	Blend No.	^{235}U estimate (g)		
		Experimental assay device results with 95% confidence interval	Delayed neutron assay results	Chemical analysis results
		±0.0024		
A	1	0.1647	0.1645	0.1623
B	1	0.1615	0.1622	0.1631
C	1	0.1628	0.1644	0.1651
D	1	0.1645	0.1619	0.1621
E	1	0.1606	0.1621	0.1628
F	1	0.1644	0.1627	0.1646
G	1	0.1632	0.1665	0.1645
H	1	0.1620	0.1627	0.1617
I	1	0.1632	0.1644	0.1638
J	1	0.1592	0.1607	0.1597
K	1	0.1649	0.1658	0.1666
L	1	0.1589	0.1596	0.1589
		±0.0022		
A	2	0.1172	0.1197	0.1195
B	2	0.1299	0.1288	0.1280
C	2	0.1208	0.1215	0.1221
D	2	0.1209	0.1221	0.1206
E	2	0.1252	0.1262	0.1272
F	2	0.1238	0.1217	0.1210
G	2	0.1292	0.1278	0.1283
H	2	0.1216	0.1224	0.1223
I	2	0.1291	0.1289	0.1289
J	2	0.1252	0.1245	0.1251
K	2	0.1303	0.1295	0.1231
L	2	0.1227	0.1233	0.1258
		±0.0015		
A	3	0.2871	0.2840	0.2850
B	3	0.2960	0.2939	0.2931
C	3	0.2884	0.2859	0.2899
D	3	0.2873	0.2852	0.2867
E	3	0.2961	0.2937	0.2954
F	3	0.2878	0.2858	0.2870
G	3	0.2857	0.2871	0.2879
H	3	0.2830	0.2813	0.2873
I	3	0.2865	0.2849	0.2855
J	3	0.2864	0.2852	0.2871
K	3	0.2916	0.2904	0.2907
L	3	0.2910	0.2866	0.2900

Therefore, for a 50-mm-long fuel rod, the counts obtained per unit length at the ends of the rod are ∿8% lower than at the center. If the fuel rod is started somewhat before the centerline of the detectors and moved at a uniform speed to an equal distance beyond the centerline, the result is that the count rate per unit fuel rod length has an identical distribution as given by Eq. (7), but the constant A is of lower magnitude. Therefore, from this result, using a stationary scan appears advantageous.

4.3.2 Multiple fuel rod assay

Interference effects (for multiple simultaneous fuel rod assay) between fuel rod channels located along the periphery of the machine were experimentally determined. The interferences are caused by detection of neutrons (from fissions induced in a fuel rod in adjacent fuel rod channels) in a reference fuel rod channel. Fractional interferences are calculated by dividing the number of fission neutrons detected from a fuel rod in an adjacent channel by the number of fission neutrons detected from the same fuel rod in the reference channel. Another source of interference arises from fission neutrons released from adjacent channels thermalizing and causing fissions in a fuel rod in the reference channel. However, this source of interference was small compared with the first source of interference mentioned, which may partly be because of the typically low mass of fissile material assayed at any one time.

Experimentally determined values of fractional interference vs separation angle between fuel rod holes of adjacent fuel rod channels are plotted in Fig. 13. An interference of 1% is a reasonable design criteria. In this case, if the fissile content of a fuel rod in one channel differs by as much as 10% from the fissile contents of fuel rods in adjacent channels, the effect on assay results in adjacent channels will be ∿0.1%. Also, such effects can appropriately be corrected numerically. An interference of less than 1% requires that the separation between fuel rod channels be at least 30° for polyethylene channels and at least 35° for graphite channels. (Separation blocks composed of polyethylene are placed between the channels to reduce interference effects. A channel composed of either polyethylene or graphite is ∿20° in arc length using a 0.30-m-diam tank; thus, the closest approach of fuel rod holes is 20°.)

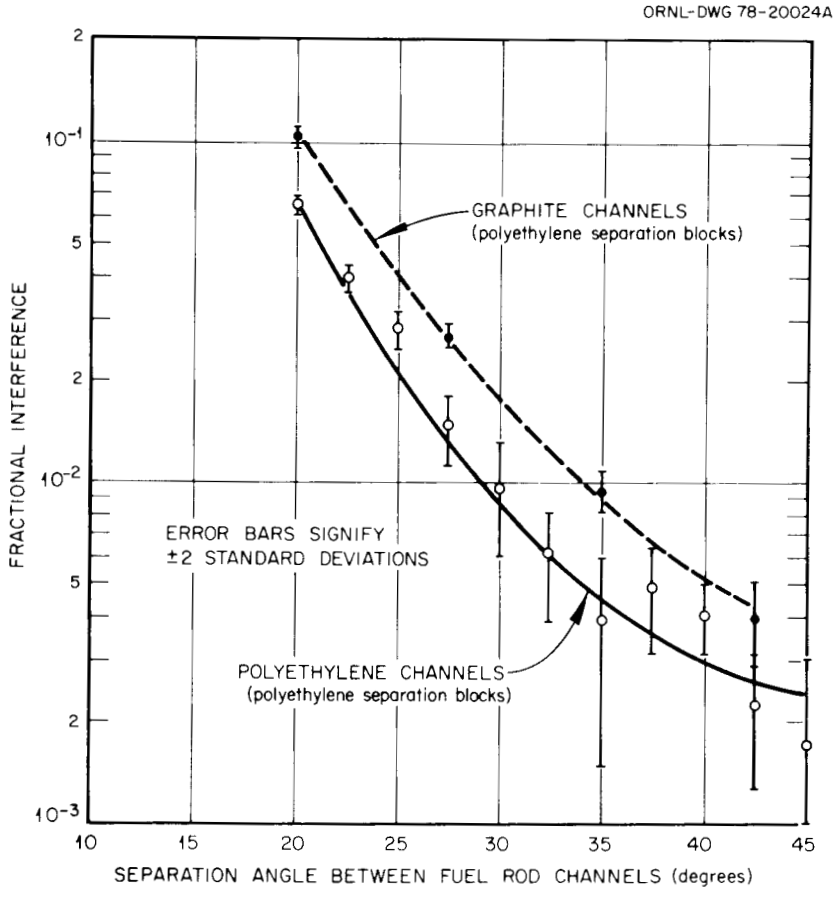

Fig. 13. Fractional interferences between adjacent fuel rod channels.

Based on these data, a production device reasonably will have 10 or 12 channels for graphite or polyethylene channels, respectively.

Detector sample holders or channels composed of graphite experience an increase of about 30% in detection of both source background and sample fission counts. As a result, fuel rods can be assayed more rapidly using graphite rather than polyethylene channels, and the number of fuel rods assayed within a given time using 10 graphite channels will be approximately the same as that using 12 polyethylene channels. In addition, the fuel rod loading mechanism will be simpler for 10 channels than for 12 channels; however, the mechanical design and fabrication will be more complicated for the irradiator. The decision of whether to use graphite or polyethylene channels depends on the overall design of the assay device.

4.3.3 Long-term operation

A long-term stability experiment on the experimental assay machine was performed. A fuel rod containing ∿0.3 g ^{235}U was repeatedly assayed almost 2000 times over a 12-day period. Stability of long-term operation and the ability of assay analysis procedures to correct for long-term drifts were tested. Only small long-term variations (∿0.3%) in counting rate were observed beyond that produced by source decay; the source decayed ∿0.8% over the 12-day period. The analysis procedure successfully corrected for drifts in the counting rate.

Count rates obtained during the experiment are given in Fig. 14. As can be seen, the count rates follow the source decay quite well, which indicates good stability. The high-intensity hot cell lights slightly increased the detector temperature, thus increasing the count rate by ∿0.3%.

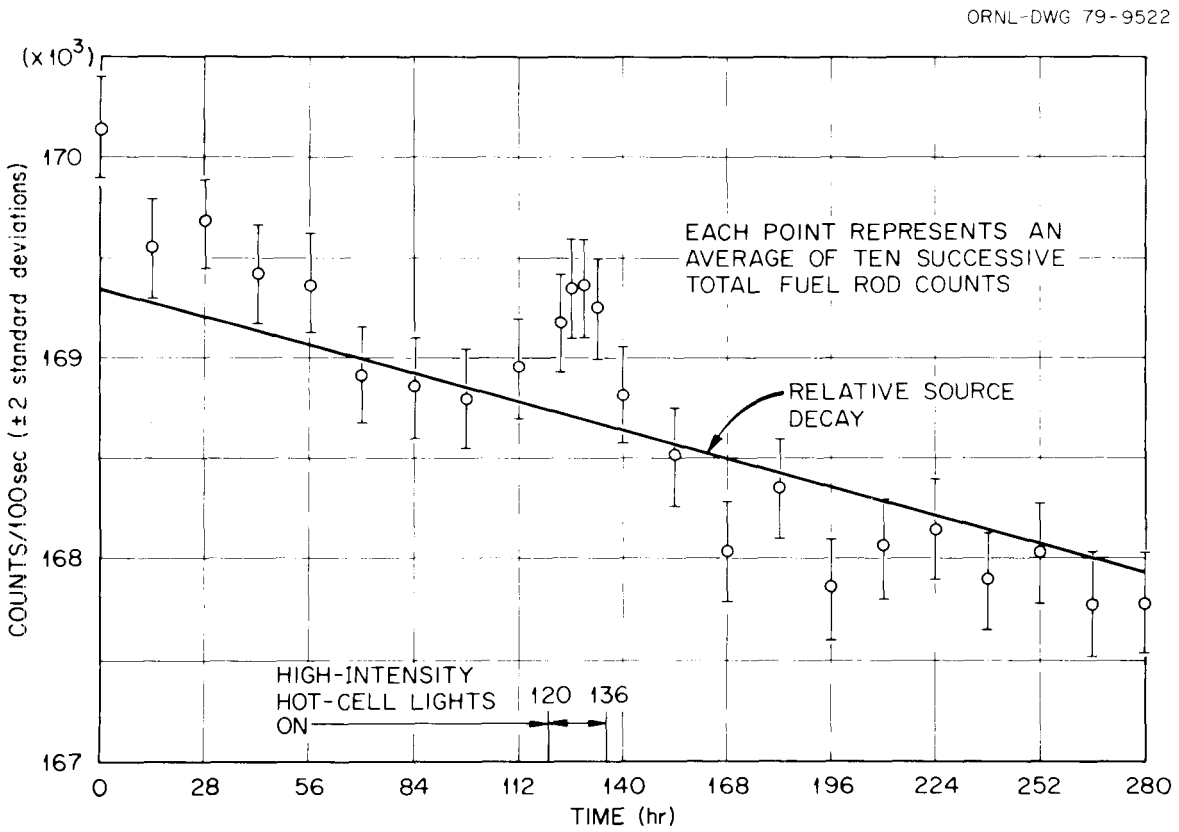

Fig. 14. Results of long-term stability experiment.

Each point in the figure represents the average of 10 successive 100-sec total fuel rod counts.

Although the source decayed 0.8% during the experiment and drifts of 0.3% due to temperature variations were observed, estimated ^{235}U contents using the drift-correcting analysis procedure were insensitive to count rate changes. The analysis procedure uses the source count rate, which is measured at regular intervals, to correct for changes in sample count rate. The calibration equation is normalized to sample count rates at a particular time (e.g., at time zero). However, at any time, the source count rate is proportional to sample count rate, and the following relationship can be applied: $C_0 = C_t\, S_0/S_t$, where C_0 is the count rate corrected to time zero, C_t is the measured count rate at time t, S_0 is the source count rate at time zero, and S_t is the measured source count rate at time t. By applying this equation, count rates corrected to time zero can be used in the calibration equation to estimate fissile content.

This equation assumes that the ratio of fuel rod counts to source counts is constant with time. This was verified in the long-term assay experiment. Figure 15 is a plot of this ratio vs time for the long-term experiment. Each point represents the average ratio of ten successive fuel rod and background counts. The standard deviation about the average ratio was calculated using propagation-of-error techniques and assuming that the counts were Poisson distributed. The data indicate that the ratio is constant despite source decay and long-term drifts.

By applying this analysis procedure, count rates corrected to time zero can be used in the calibration equation to estimate ^{235}U content. Average estimated ^{235}U content for 10 successive assays using the analysis procedure to correct for drifts at times 6, 78, and 240 hr were 0.29718, 0.29742, and 0.29657 g, respectively. The measurements were distributed with a standard deviation of $\sim$0.002 g, and the precision was primarily limited by count rate.

To obtain a good estimate of S_t, a weighted-average method is used. At specified time intervals, the source count rate is measured. A good estimate of the current source count rate is given by a weighted average of all previous source count rate measurements.

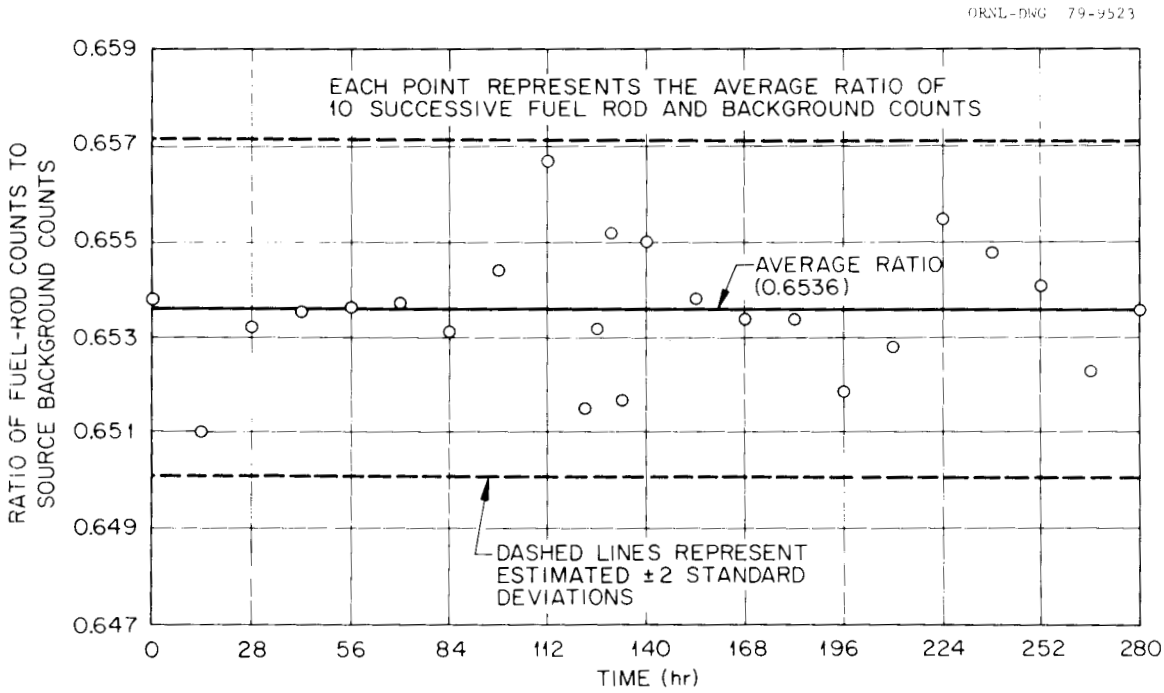

Fig. 15. Ratios of fuel rods to background counts in long-term stability experiment.

5. PRODUCTION ASSAY DEVICE

5.1 Performance Criteria

In an HTGR fuel recycle facility, the fuel rod output from two 20,000-rod/day fuel rod molding machines will be routed to one assay device, resulting in one rod being assayed every 2.2 sec. Criteria have been developed for fuel rod assay and are presented in this section.

The function of the fuel rod assay system is to measure the total fissile content of uncarbonized HTGR fuel rods immediately after rod fabrication for the purposes of (1) ensuring that fissile loadings meet specifications and (2) measuring the total quantity of fissile material that is contained in fabricated rods. The latter purpose is required to meet material balance area accountability requirements. Specific fuel rod assay performance criteria are given below.

1. The rod assay system will measure the total fissile content of 100% of fabricated rods.
2. The assay system must have an average throughput of one fuel rod every 2.16 sec (40,000/day).
3. The single measurement precision (1 σ) must be 0.5% or less (random error) for a 15-rod column or 2% or less for a single rod.
4. The systematic error in total fissile material must be less than 0.3% over a two-month operating period.
5. The fuel rod handling must be designed so that less than 1 rod per 1000 is chipped or abraided to the extent that more than 1 fuel particle is removed from the rod.
6. The assay system must be modularized so that it can be remotely maintained by substitutional maintenance.
7. The assay system must be equipped with hardware for periodic calibration. Standards must be assayed after every 24 hr of operation to recalibrate the system. These standards must be periodically replaced to reflect changes in the loadings of the fuel rods that are being assayed. The calibration system must be designed so that all standards in use at one time are stored in a magazine that can be remotely connected and disconnected to the assay system. A subsystem

to automatically unload rods from the magazine, move the calibration rods to the normal rod channels, and return the standards to the magazine will be provided. A temporary storage area can be included.

5.2 Design and Operation

Many designs have been studied for the on-line assay device, and many of them appear to satisfy the criteria given in the last section. One such design, which the authors believe offers the advantage of simplicity in fuel rod handling, is presented in this section.

The nondestructive assay system determines the fissile material loading in individual HTGR fuel rods by measuring the intensity of prompt fission neutrons emitted from the rod during irradiation with thermal neutrons. The assay system consists of four subsystems: an irradiator, a fuel rod positioning/translating mechanism, a neutron detector subsystem, and a control and data acquisition subsystem. A description of each component is given below.

The fuel rod irradiator consists of a ^{252}Cf neutron source surrounded by a moderator assembly that produces a neutron flux with a high ratio of thermal to fast neutrons. The thermal neutrons induce fissions in fissile materials (^{235}U, ^{233}U, ^{239}Pu, ^{241}Pu) so that no signal is produced from thorium, ^{234}U, ^{236}U, or ^{238}U. The moderator assembly is a Zircaloy tank containing D_2O that surrounds an inner moderator thimble containing polyethylene, tungsten, and the ^{252}Cf source. The irradiator tank with the surrounding detector assemblies is shown in Fig. 16.

Fuel rod loading and unloading is relatively simple. A fuel rod carousel has 12 fuel rod positions at 30° intervals. At 10 of these 12 fuel rod positions within the carousel, the fuel rods are being irradiated and counted. At one of these positions, a fuel rod is being unloaded, and, at the adjacent position, a fuel rod is being loaded. After a specified time, long enough to permit unloading and loading to occur, the carousel rotates to allow the next fuel rods to be unloaded and loaded. The advantage of this design is the simplicity in the fuel rod handling.

The design of the fuel rod positioning/translating system is relatively straightforward. Two push rods are used — one for the unloader

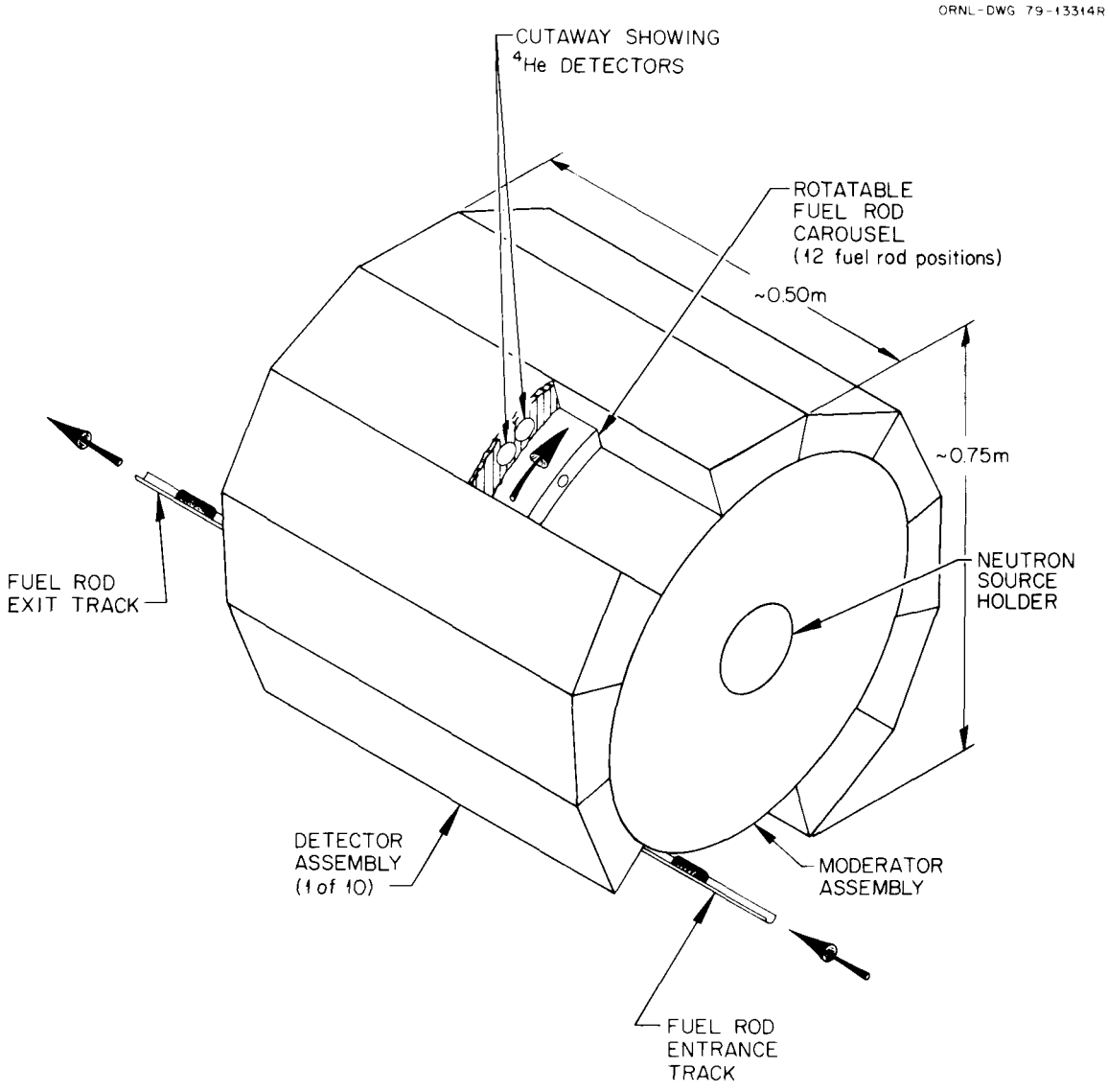

Fig. 16. Carousel fuel rod assay machine.

and the other for the loader. At the loader, a fuel rod is placed in the track; the push rod moves forward, placing the fuel rod into the carousel; and the push rod retracts. A similar operation occurs simultaneously at the unloader. This unloading-loading operation should take no more than 1 sec. The rotation of the carousel through each 30° should also take no more than 1 sec. Therefore, one rod will be loaded and unloaded approximately every 2 sec, and each rod will be irradiated and counted approximately every 10 sec.

Ten modular detector assemblies are positioned on the surface of the Zircaloy irradiator tank, as shown in Fig. 16. Each detector assembly contains two ^{4}He-filled fast-neutron proportional counters. The relative positions of the counters and fuel rods are shown in Fig. 17. These detectors are relatively insensitive to gamma rays. However, to protect them from large variations in the gamma background around the assay device, they are shielded with lead. The two detectors and a common preamplifier are contained in a module that can be replaced rapidly.

The sequencing of rod-handling operations and neutron counting is performed by a sequence controller such as a programmable logic controller. The signals from the neutron detectors must be amplified, shaped, tested, and counted relative to precise timers. The neutron counts must be corrected for background and converted to fissile mass values by means of calibration data. These data must be stored and transferred to permanent records. A different sequencing, data collection, and analysis

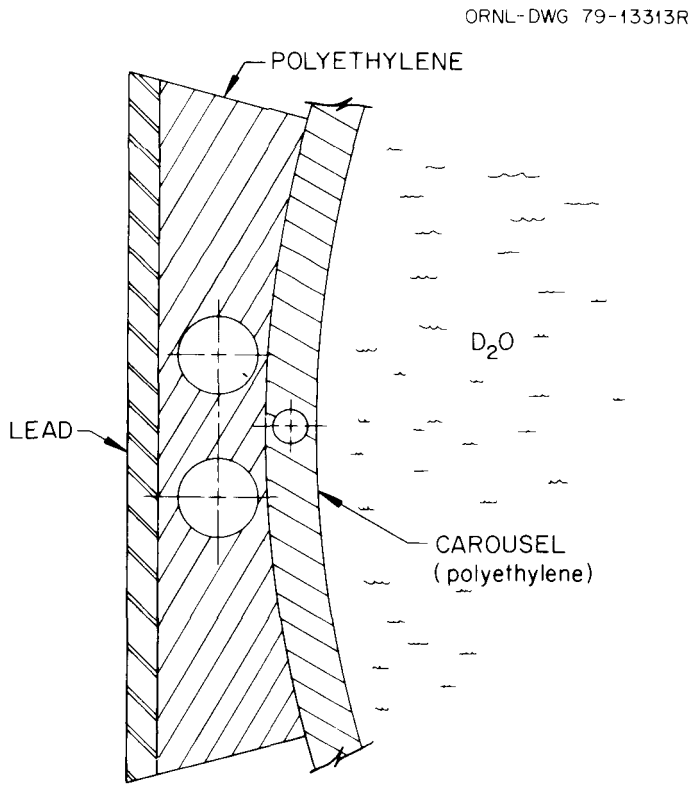

Fig. 17. Detector module.

function must be performed for periodic calibration of the system. In addition, the subsystem must perform real-time fault detection to alert the operator to abnormal operations or occurrences.

A schematic rod flow diagram is shown in Fig. 18 and a timing diagram in Fig. 19. Fuel rod standards are removed from the standard magazine and loaded into the assay machine if the system is in the calibration mode. Reject rods are diverted to a temporary storage area for assay at a later time. If rejected twice, the rod will be sent to a reject rod storage area.

A detailed description of the irradiator and the detector modules is presented in Table 5.

Table 5. Details of irradiator and detector modules

Irradiator
Zircaloy tank
Diameter = 55 cm
Length = 42 to 50 cm
Wall thickness = side walls (irradiation position) $\leq$0.64 cm
Source insert
Polyethylene (high density)
OD = 9.7 cm
ID = 5.08 cm
Length = 10.0 cm
Tungsten alloy = >94% tungsten
OD = 5.08 cm
ID = <2 cm
Length = 5 cm
Remaider of insert filled with graphite
^{252}Cf neutron source = $\geq$1.7 mg — replace every 2 years
D_2O moderator = $\leq$0.5% H_2O
Detector modules
Detectors = ^{4}He-filled proportional counters
20 atm ^{4}He
Stainless steel cathode
Anode diameter = 0.0025 cm
Cathode diameter = 3.81 cm
Active length = 15.2 cm
Fuel rod tube = Zircaloy
Wall thickness = $\leq$0.16 cm at assay position
Module
Should contain two detectors, preamplifier, and 1.5-cm-thick lead shield

ORNL-DWG 79-13319R

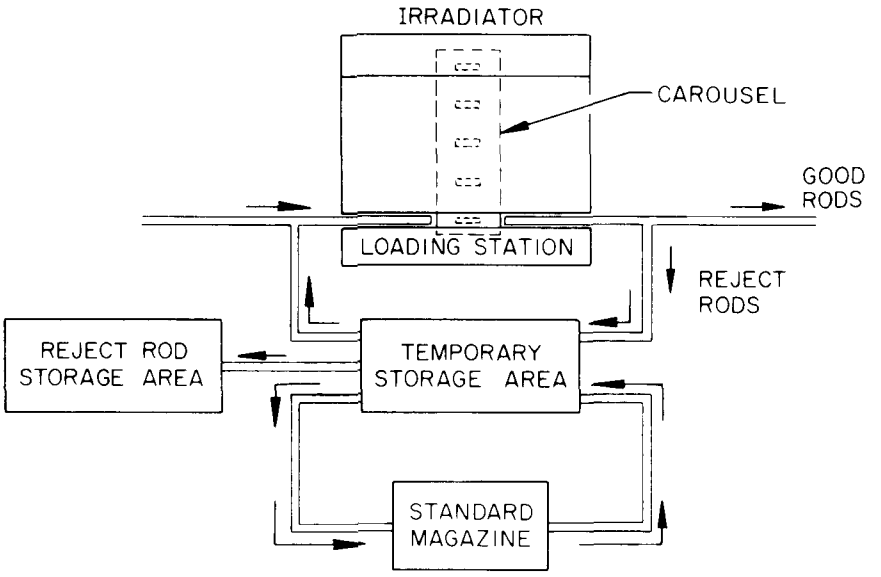

Fig. 18. Fuel rod flow rates.

ORNL-DWG 79-13680R

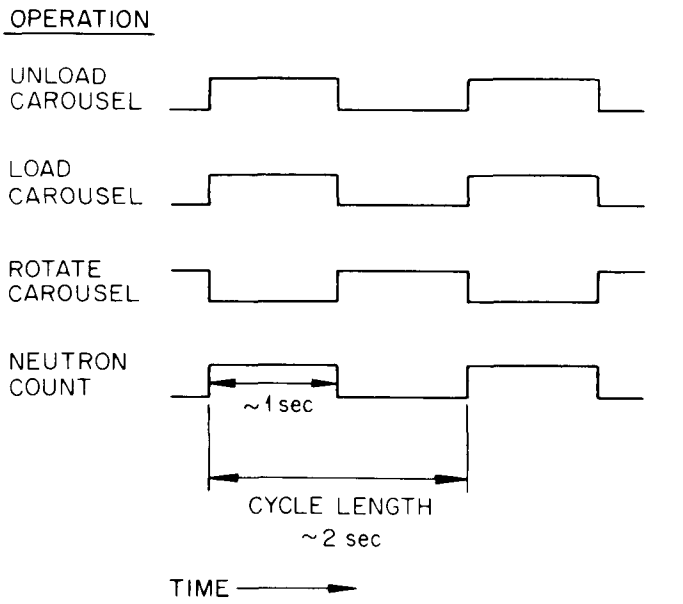

Fig. 19. Timing sequence.

6. ANALYSIS PROCEDURES

The assay data are analyzed to provide estimates for the (1) fissile content of each fuel rod and (2) average fissile content of currently produced fuel rods.

The fissile content of each fuel rod will be measured with a random error (relative standard deviation) of 2% and with a maximum systematic error of less than 1%. For a given batch of fissile particles, the measured fissile contents of the fuel rods produced will be randomly distributed with a relative standard deviation of 2% about the mean which may be in error by as much as 1%. If the fissile content of a particular fuel rod differs by more than a certain amount from the specified fissile content, that fuel rod is rejected. Such a specification has not yet been developed. However, a rejection criterion is assumed where fuel rods with a measured fissile content differing by more than 15% from the required fissile content are rejected with a 99.5% probability and good rods are rejected with a 1% probability. To satisfy this criterion, a 15% deviation must represent approximately five relative standard deviations. With a 2% relative standard deviation in the measurements, this is easily achieved. The rejected rods will be sent to a temporary storage area and later assayed again. To be considered bad, a fuel rod must be rejected twice so that only $\sim$0.01% of the good rods and $\sim$99% of the bad rods are ultimately rejected.

The estimates of the average fissile content of currently produced rods, as measured by the assay machine, will be used through appropriate computer-controlled actions to change the fissile particle dispenser setting of the fuel rod fabrication machine. A schematic of such a control system is shown in Fig. 20. If the assay results indicate that the average fissile content is significantly less than or greater than the specified content, the dispensers will be changed to allow more or less fissile particles into the fuel rod mold. An investigation of mathematical analysis procedures for use in controlling fissile content of fuel rods was undertaken.[12] One technique considered uses a weighted-average fissile content of fuel rods for use in controlling the dispensers. A brief mathematical description of this procedure is given below.

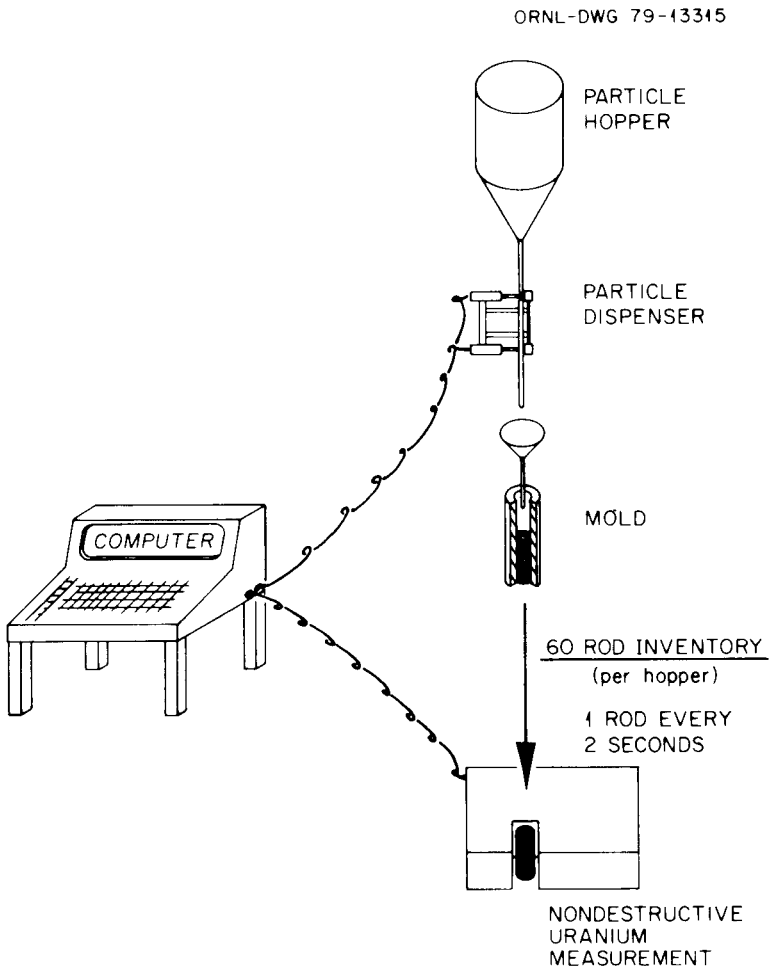

Fig. 20. NDA and production control for fuel rod fabrication.

The estimate of average fissile content of currently produced fuel rods is given as

$$\overline{X}_n = \sum_{i-i}^{n} w^{n-i} X_i / \sum_{i-i}^{n} w^{n-i} = \left(\frac{1-w}{1-w^n}\right) \sum_{i-i}^{n} w^{n-i} X_i \ , \tag{8}$$

where

$\overline{X}_n$ = Nth estimate of average fissile content,

w = weight (<1.0),

X_i = measured fissile content of ith fuel rod since last dispenser setting change.

Equation (8) can be expressed as Eq. (9) for easy implementation on a computer.

$$\overline{X}_n = \overline{X}_{n-1} + \left(\frac{1 - w}{1 - w^n}\right)(X_n - \overline{X}_{n-1})$$

and (9)

$$\overline{X}_1 = X_1 \ .$$

The variance of $\overline{X}_n$ is readily derived and is given as Eq. (10).

$$V(\overline{X}_n) = \left(\frac{1 - w}{1 + w}\right)\left(\frac{1 + w^n}{1 - w^n}\right) V(X) \ , \tag{10}$$

where

$V(\overline{X}_n)$ = variance of estimated average fissile content,
$V(X)$ = variance of fissile content measurement of individual fuel rod.

As N goes to infinity, Eq. (10) reduces to

$$V(\overline{X}_n) = \left(\frac{1 - w}{1 + w}\right) V(X) \tag{11}$$

for large N.

Therefore, from Eq. (11), the variance of the average estimated fissile content for a large number of measurements decreases as the weight w approaches 1.0. However, as the weight w increases, the influence in the estimated average due to previous measurements increases and that due to more current measurements decreases. To detect a relatively large step change rapidly, a weight somewhat less than 1 (such as 0.9) would be useful. To detect small drifts in fissile content, a weight closer to 1 (e.g., 0.99) may be more useful. Therefore, having two estimates of the average fissile content may be best, one using a weight of $\sim$0.9 and another using a weight of $\sim$0.99 for detecting step changes and small drifts, respectively.

As an example, let w = 0.9 and N = 10; thus, the estimated variance in average fissile content is 0.11 $V(X)$. The standard deviation in the

average fissile content has decreased to one-third that of an individual measurement. The percentage contributions to the estimated average from the 10 fuel rods in their assayed order are: 5.9, 6.6, 7.3, 8.2, 9.1, 10.1, 11.2, 12.4, 13.8, and 15.4. The first measurement contributes approximately one-third as much to the average as the last measurement.

Control of the fissile content of the fuel rods can be obtained in a manner similar to that explained in the paragraph. When the weighted-average measured fissile content falls twice successively outside the 95% confidence intervals of the specified fissile content, the fissile particle dispensers are appropriately adjusted. The weighted-average summation is reset to i=1 for the adjusted fuel rods. For example, if the relative standard deviation is 2% for a single measurement, the relative standard deviation in the weighted average after measuring a large number of rods using a weight of 0.9 will be $\sim$0.5%. Two standard deviations would be $\sim$1%. If the weighted average differs from the specified content by more than 1% twice in a row, a control action is taken by adjusting the fissile particle dispensers.

The fissile content of each fuel element will be known from the measurements made on the fuel rods before loading the fuel rods into the fuel elements. The random errors in the measurements tend to cancel and the relative standard deviation of the total fissile content decreases with the square root of the number of measurements. With a 2% relative standard deviation in an individual fuel rod measurement, as 1600 fuel rods are loaded into a fuel element, the relative standard deviation in the total fissile content of the fuel element is 0.05% due to random error. The specification for uranium loadings of the fuel element is as follows: no more than 1% of fuel elements shall have a uranium loading which varies by more than 2% from the specified value. Based on the above analysis, satisfaction of this specification should not present a problem. Material accountability considerations are addressed in the next section.

A mathematical description of an analysis procedure for assay of HTGR fuel rods is presented in Appendix B.

7. COMPLIANCE WITH MATERIAL ACCOUNTABILITY REQUIREMENTS

The material control and accountability aspects of a $^{233}U/Th$ recycle facility continue to be investigated.[13] One of the material accountability requirements, as given in Part 20 of Title 10 of the Code of Federal Regulations, specifies that the limit of error (95% confidence interval) of material unaccounted for (MUF) must be kept to within 0.5% for total plant in-process material balance for two months. To satisfy this requirement, the systematic errors in the measurements must be kept as low as practicable.

The maximum systematic error in fissile material measurements for fuel rods produced from a given batch of particles is ∿1%. A large part of this systematic error, 0.9%, appears as a random error when comparing fissile content measurements of fuel rods produced from different batches of particles. Only ∿0.2% appears as a systematic error, which is the same for fissile material measurements from fuel rods produced from different batches. Because 24 batches of particles will be blended together, the estimated 95% confidence interval for total fissile material measured of the blended batch is less than 0.35%. Over a two-month period, several hundred batches of particles may be produced, and the maximum systematic error in total fissile material measured should be close to 0.2%. Based on this result, it appears that the material accountability requirements can be satisfied.

8. SUMMARY AND CONCLUSIONS

A nondestructive assay device, which uses a thermal neutron irradiation and fast-fission neutron detection method, was designed and fabricated. Experiments were performed with the device to determine whether a similar device could adequately satisfy quality control and material accountability requirements for assay of fuel rods produced in an HTGR fuel recycle facility. In these experiments, accuracy, precision, and operating procedures were thoroughly tested using the experimental assay device. Based on the results of these experiments, a preliminary design of an on-line assay machine was made, and this design is described in the report. In addition, analysis procedures useful for on-line assay of HTGR fuel rods were identified.

Such an NDA machine will be capable of satisfying quality control and material accountability requirements. It is estimated that a fuel rod can be assayed in the on-line assay machine every 2 sec. The relative standard deviation in the fissile material measurement of each fuel rod due to random errors is 2%, and the maximum systematic error due to process variations is $\sim$0.35%. Over a two-month period, the maximum systematic error in fissile material measurements of total fuel rod production approaches $\sim$0.2%.

ACKNOWLEDGMENTS

The authors wish to express their gratitude to the following people for their help with this work: S. R. McNeany for many helpful discussions and for cooperating in a joint effort to develop a measurement technique for fissile isotopic measurement of ^{233}U-^{235}U fuels; J. C. McLaughlin and A. G. Mason for help in setting up and performing many of the experiments; D. D. McCue for modifying the experimental assay device to automatically cycle fuel rods; H. O. Menlove of Los Alamos Scientific Laboratory for guidance in design of the experimental assay device; D. R. Johnson, W. J. Lackey, and T. D. Sease for providing programmatic support; D. A. Dyslin for engineering support in the design of the experimental equipment; P. Angelini and J. E. Mack for reviewing the manuscript; and Rhonda Castleberry and the Engineering Technology Division Reports Office for preparing the report for publication.

REFERENCES

1. A. R. Olsen, Oak Ridge National Laboratory, personal communication to E. J. Allen, May 1979.
2. J. D. Jenkins, S. R. McNeany, and J. E. Rushton, *Conceptual Design of the Special Nuclear Material Nondestructive Assay and Accountability System for the HTGR Fuel Refabrication Pilot Plant,* ORNL/TM-4917 (July 1975).
3. R. A. Forster, D. B. Smith, and H. O. Menlove, *Error Analysis of a ^{252}Cf Fuel-Rod-Assay System,* LA-5317 (April 1974).
4. J. Gilat and Y. Gurfinkel, "Self-Shielding in Activation Analysis," *Nucleonics* 21(8), 143 (1963).
5. E. J. Allen and S. R. McNeany, *Nondestructive Fissile Isotopic Measurement Technique for ^{233}U-^{235}U Fuels Using Prompt and Delayed Fission-Neutron Counting,* ORNL/TM-6686 (March 1979).
6. P. Angelini, Oak Ridge National Laboratory, personal communication to E. J. Allen, May 15, 1979.
7. P. Angelini and A. J. Caputo, Oak Ridge National Laboratory, personal communication to E. J. Allen, June 1979.
8. *HTGR Fuel Product Specifications,* GA-A13464 (January 1976).
9. D. P. Stinton, Oak Ridge National Laboratory, personal communication to E. J. Allen, May 10, 1979.
10. S. R. McNeany, R. W. Knoll, and J. D. Jenkins, *Design and Evaluation of a Nondestructive Fissile Assay Device for HTGR Fuel Samples,* ORNL/TM-6610 (February 1979).
11. P. Angelini and J. E. Rushton, *Uranium and Thorium Loadings Determined by Chemical and Nondestructive Methods in the HTGR Fuel Rods for the Fort St. Vrain Early Validation Irradiation Experiment,* ORNL/TM-6562 (January 1979).
12. D. J. Downing and J. Milton Bailey, *Production Control in HTGR Fuel Rod Fabrication,* ORNL/CSD/TM-87 (June 1979).
13. J. A. Carpenter, Jr., et al., *Material Control and Accountability Aspects of Safeguards for the USA ^{233}U/Th Fuel Recycle Plant,* ORNL/TM-6645 (January 1979).

Appendix A

NONDESTRUCTIVE FISSILE ISOTOPIC MEASUREMENT OF ^{233}U-^{235}U FUELS USING PROMPT AND DELAYED FISSION NEUTRON COUNTING

Presented in this appendix are the results of a ^{233}U-^{235}U assay experiment to determine whether assay techniques employing active neutron interrogation with prompt and delayed neutron detection could be used successfully to determine fissile isotopic ratios as well as total fissile content of fuel samples. (The number of delayed neutrons is significantly less for ^{233}U than for ^{235}U. By measuring both the delayed and prompt neutrons, an estimate of the fraction of ^{233}U and ^{235}U can be obtained.) This was possibly the first experiment to use neutron interrogation and neutron detection techniques for determination of fissile isotopic content in ^{233}U-^{235}U fuel samples.

Eleven aluminum test capsules were filled with specified amounts of ^{233}U-loaded resin kernels, ^{235}U-loaded resin kernels, and glass beads. The glass beads were used as filler material and blended in to obtain the same volume of mixture in each capsule. The masses of ^{233}U and ^{235}U in each capsule are given in Table A.1, which also gives background-corrected counts obtained by assaying each sample in the prompt and delayed neutron assay machines.

An equation was derived from basic physical considerations relating measured counts to ^{233}U and ^{235}U contents. This relation is as follows:

$$C = \frac{A3 \times U3}{U3 + R \times U5} + \frac{A5 \times U5}{U3 + R \times U5} \times \{1 - \exp[-D(U3 + R \times U5)]\} , \qquad \text{(A-1)}$$

where

C = counts (delayed or prompt),

U3 = ^{233}U content,

U5 = ^{235}U content,

A3, A5, R, and D = constants that are different for delayed and prompt neutron counting.

Table A.1. Test capsule loadings and background-corrected counts

Capsule	Content (g)		Neutron counts	
	^{233}U	^{235}U	Delayed	Prompt
1	0	0.3000	86,033	224,485
2	0.1500	0.1500	68,218	219,721
3	0.3000	0.0002	50,604	217,678
4	0	0.4000	110,940	287,064
5	0.1000	0.3000	98,371	281,788
6	0.2000	0.2000	89,306	286,284
7	0.3000	0.1000	77,823	284,259
8	0.4000	0.0003	63,285	276,866
9	0	0.5000	127,491	335,350
10	0.2500	0.2500	105,960	341,024
11	0.5000	0.0004	80,055	340,286

The constants in Eq. (A-1) were determined using a nonlinear least squares fit to the data given in Table A.1, excluding the measured counts for capsules 5 and 7. These capsules were assumed to have unknown uranium contents. The calculated constants are given in Table A.2.

The ^{233}U and ^{235}U contents in capsules 5 and 7 were calculated using the fitted equations for the prompt and delayed neutron counts. For capsule 5, the ^{233}U and ^{235}U calculated masses were 0.0991 and 0.2967 g, respectively. For capsule 7, the ^{233}U and ^{235}U calculated masses were

Table A.2. Constants for Eq. (A-1) obtained by nonlinear least squares fit to data in Table A.1, excluding data of capsules 5 and 7

Constant	Neutrons	
	Prompt	Delayed
A3	1,388,356	380,922
A5	1,595,862	748,838
R	2.1315	2.7672
D	0.56247	0.46518

0.3046 and 0.1000 g, respectively. Each of these values is within 1.5% of the respective measured mass of material. These results indicate that the ^{233}U and ^{235}U contents of an unknown sample can be accurately determined by neutron interrogation with prompt and delayed neutron detection over a wide range of ^{233}U to ^{235}U ratios.

More information about this work is given in Ref. 5. A detailed description of the delayed neutron assay machine is given in Ref. 8.

Appendix B

DATA ANALYSIS PROCEDURE FOR ASSAY OF HTGR FUEL RODS

The analysis procedure for assay of HTGR fuel rods can be divided into four steps:

1. from total counts, subtract source or background counts to obtain background-corrected counts;
2. correct background-corrected counts to time zero (correcting for source decay and electronic drifts);
3. calculate uranium content from the calibration equation;
4. calculate weighted-average uranium content of a series of fuel rods.

These four steps are described mathematically below. An example follows.

Step 1. Obtaining background-corrected counts

$$C_c = C_i - S_t ,$$

where

C_i = total counts (fuel rod plus source counts) for the ith fuel rod,
S_t = current estimated source counts,
S_0 = source counts at time zero,
C_c = background-corrected counts.

$$S_t = \frac{\sum_{j=i}^{m} x^{m-j} S_j}{\sum_{j=i}^{m} x^{m-j}} ,$$

where

x = source weighting factor ($\sim$0.8),
S_j = jth source count of m source measurements.

Step 2. Correcting background-corrected counts to time zero

$$C_0 = (C_i - S_t)\left(\frac{S_0}{S_t}\right) ,$$

where

C_0 = background-corrected counts corrected to time zero.

$$V(C_0) = \left(\frac{S_0}{S_t}\right)^2 V(C_i) + \left(\frac{S_0 C_i}{S_t^2}\right)^2 V(S_t) ,$$

where

$V(C_0)$ = variance in C_0,

$V(C_i) = C_i$ = variance in C_i,

$V(S_t) = \left(\frac{1 - x}{1 + x}\right)\left(\frac{1 + x^m}{1 - x^m}\right) S_t$ = variance in S_t.

Therefore,

$$V(C_0) = \left(\frac{S_0}{S_t}\right)^2 C_i \left[1 + \frac{C_i}{S_t}\left(\frac{1 - x}{1 + x}\right)\left(\frac{1 + x^m}{1 - x^m}\right)\right] .$$

Step 3. Calculating fissile content from calibration equation

$$C_0 = a(1 - e^{-b} U_i) = \text{calibration equation} ,$$

where

a and b = calibration constants,

C_0 = background-corrected counts corrected to time zero,

U_i = estimated fissile content of ith fuel rod.

Inversion of the calibration equation yields

$$U_i = -\frac{1}{b} \ln \left(1 - \frac{C_0}{a}\right) .$$

The variance of U_i can be estimated using the following equation:

$$V(U_i) \approx \left(\frac{\delta U_i}{\delta C_0}\right)^2 V(C_0) = \frac{V(C_0)}{(ab - bC_0)^2} .$$

The estimated fissile content U_i with the corresponding variance $V(U_i)$ can be used to determine whether the fuel rod meets acceptance criteria.

Step 4. Calculating a weighted-average fissile content

$$\overline{U} = \sum_{i=i}^{N} w^{N-i} U_i \Big/ \sum_{i=i}^{N} w^{N-i} ,$$

where

$\overline{U}$ = weighted-average fissile content,

w = 0.9 to 0.99,

$$V(\overline{U}) = \left(\frac{1 - w}{1 + w}\right)\left(\frac{1 + w^N}{1 - w^N}\right) V(U_i),$$

$V(\overline{U})$ = variance of weighted-average fissile content.

For example, using a 10-sec counting period and 1 mg ^{252}Cf, assume that the following counts are obtained for the hundredth fuel rod:

C_{100} = 20,000

$S_0 = S_t$ = 10,000

M = 100

X = 0.8 .

The calibration equation constants a and b are 42,262 and 0.600, respectively. Estimate the ^{235}U content of this rod and the standard deviation in this estimate. Using the appropriate equations, one obtains

C_0 = 10,000,

$V(C_0)$ = 24,444,

$U_{100} = 0.4500,$

$V(U_{100}) = 6.524 \times 10^{-5},$

$\sigma(U_{100}) = 0.00808.$

The relative standard deviation in the hundredth measurement is therefore 1.8%. For 100 fuel rods and using a weight w of 0.9, the relative standard deviation in the weighted-average fissile content is $\sim$0.4%.

Note that, in the above analysis procedure, corrections for interference effects between fuel rod channels and for variations in ^{233}U-^{235}U composition were not included. For on-line assay, such corrections need to be applied.

ORNL/TM-6960
Dist. Category UC-77

Internal Distribution

1-2. Central Research Library
3. Document Reference Section
4-5. Laboratory Records Department
6. Laboratory Records Department — RC
7. ORNL Patent Office
8. R. K. Abele
9-18. E. J. Allen
19. P. Angelini
20. S. P. Baker
21. R. L. Beatty
22. E. D. Blakeman
23. R. A. Bradley
24. A. J. Caputo
25-29. M. M. Chiles
30. J. C. Cleveland
31. D. A. Costanzo
32. A. Crawford
33. R. G. Donnelly
34. H. N. Hill
35-36. M. R. Hill
37. F. J. Homan
38. R. D. Hurt
39. D. W. Jared
40-44. J. D. Jenkins
45. D. R. Johnson
46. R. R. Judkins
47. P. R. Kasten
48. H. T. Kerr
49. W. J. Lackey
50. E. L. Long
51. A. L. Lotts
52. J. E. Mach
53. C. D. Martin
54. D. D. McCue
55. J. C. McLaughlin
56. S. R. McNeany
57. J. F. Mincey
58. A. R. Olsen
59. R. T. Primm
60. G. L. Ragan
61. J. L. Rich
62. C. W. Ricker
63-72. J. E. Rushton
73. G. Slaughter
74. I. Spiewak
75. D. P. Stinton
76. R. R. Suchomel
77. W. E. Thomas
78. S. M. Tiegs
79. T. N. Tiegs
80. H. E. Trammell
81. J. R. Weir
82. L. C. Williams

External Distribution

83. DOE CHICAGO OPERATIONS OFFICE, 9800 S. Cass Ave., Argonne, IL 60439
Manager

84—85. DOE DIVISION OF NUCLEAR POWER DEVELOPMENT, Washington, DC 20545
Director

86. DOE FAST FLUX TEST FACILITY PROJECT OFFICE, P.O. Box 550, Richland, WA 99352
Director

87–136. FUEL REFABRICATION AND DEVELOPMENT PROGRAM OFFICE, Battelle Pacific Northwest Laboratories, P.O. Box 999, Richland, WA 99352

137. DOE RICHLAND OPERATIONS OFFICE, P.O. Box 550, Richland, WA 99352

Manager

138. SAN-DEVELOPMENT, SAN DIEGO AREA OFFICE, P.O. Box 81325, San Diego, CA 92138

Senior Program Coordinator

139. DOE SAN FRANCISCO OPERATIONS OFFICE, 1333 Broadway, Wells Fargo Building, Oakland, CA 94612

Manager

140. DOE OAK RIDGE OPERATIONS OFFICE, P.O. Box E, Oak Ridge, TN 37830

Assistant Manager, Energy Research and Development

141–313. DOE TECHNICAL INFORMATION CENTER, P.O. Box 62, Oak Ridge, TN 37830

For distribution as shown in TID-4500 Distribution Category UC-77 (Gas-Cooled Reactor Technology)

☆ U. S. GOVERNMENT PRINTING OFFICE: 1979-640-245-272