DATE ISSUED OCT 2 1979
ORNL
MASTER COPY

ORNL/CF-79/279
790907

The Preparation of Kilogram Quantities of $^{233}UO_2$ for the Light Water Breeder Reactor Demonstration Program

J. R. Parrott, Sr.
W. T. McDuffee
R. G. Nicol
W. R. Whitson
A. M. Krichinsky

OK per. D. Hamrin 10/19/2009

[redacted]

OAK RIDGE NATIONAL LABORATORY
OPERATED BY UNION CARBIDE CORPORATION · FOR THE DEPARTMENT OF ENERGY

ORNL/CF-79/279

Contract No. W-7405-eng-26

CHEMICAL TECHNOLOGY DIVISION

THE PREPARATION OF KILOGRAM QUANTITIES OF $^{233}UO_2$ FOR THE LIGHT WATER BREEDER REACTOR DEMONSTRATION PROGRAM

J. R. Parrott, Sr. 03
W. T. McDuffee*
R. G. Nicol 03
W. R. Whitson 03
A. M. Krichinsky 03

*Consultant.

Date Published: September 1979

OAK RIDGE NATIONAL LABORATORY
Oak Ridge, Tennessee 37830
operated by
UNION CARBIDE CORPORATION
for the
DEPARTMENT OF ENERGY

CONTENTS

Page

ABSTRACT 1

1. INTRODUCTION 1

2. SUMMARY 2

3. RECEIPT AND STORAGE OF FEED MATERIAL 5
   3.1 Nitrate Solution from Hanford 7
   3.2 UO_3 from NFS and SRP 13
      3.2.1 Unloading and storage 13
      3.2.2 Dissolution 15
   3.3 Accountability 18
      3.3.1 Solution 18
      3.3.2 Solids 20

4. ^{233}U PURIFICATION 20
   4.1 Solvent Extraction 23
      4.1.1 Chemical flowsheet 23
      4.1.2 Solvent extraction run procedures 25
      4.1.3 Solvent extraction system performance 29
   4.2 Ion Exchange 32
      4.2.1 Ion exchange flowsheet 35
      4.2.2 Run procedures 37
      4.2.3 Performance of the ion exchange system 41

5. CONVERSION OPERATIONS 42
   5.1 Receipt of Uranyl Nitrate Feed Solution 44
      5.1.1 Operating conditions 44
   5.2 Precipitation and Centrifugation 46
      5.2.1 Operating conditions 46
      5.2.2 Problems encountered and methods of resolution 48
   5.3 Uranate Drying and Granulation 49
      5.3.1 Description of equipment 49
      5.3.2 Operating conditions 50
      5.3.3 Problems encountered and methods of resolution 51
   5.4 Calcination-Reduction 54
      5.4.1 Description of equipment 54
      5.4.2 Operating conditions 57
      5.4.3 Problems encountered and methods of resolution 60
   5.5 Stabilization 61
      5.5.1 Operating conditions 61
      5.5.2 Problems encountered and methods of resolution 63
   5.6 UO_2 Granulation and Blending 66
      5.6.1 Description of equipment 66

Page

5.6.2 Operating conditions 66
5.6.3 Problems encountered and methods of resolution 67
5.7 Product Removal and Distribution 67
5.7.1 Operating conditions 67
5.7.2 Problems encountered and methods of resolution 69
5.8 Cleanup Operations and Waste Handling 71
5.9 Analysis of Degradation of Specification Requirements (DSR) 72

6. MATERIAL BALANCE 74

7. QUALITY ASSURANCE 76
7.1 Quality Verification Plan 78
7.2 Feed Material 78
7.3 Purification Processes 82
7.4 Manufacturing Process 82

8. SCRAP RECOVERY 87
8.1 Dissolution of Binary Pellets and Powder Scrap 87
8.2 Uranium Oxide and ADU Scrap 92

9. WASTE MANAGEMENT 95
9.1 Liquid Waste 95
9.2 Dry Waste 96
9.2.1 Waste-drum assay technique 96
9.2.2 Accuracy of assays 96

10. EQUIPMENT PERFORMANCE 100
10.1 Dissolvers 100
10.1.1 Scrap pellet dissolver (S-20) 100
10.1.2 Oxide powder dissolver (S-15) 102
10.1.3 Thorium oxide pellet dissolver (S-30) 102
10.1.4 Dissolver charging systems 103
10.2 Purification Equipment 108
10.2.1 Solvent extraction 108
10.2.2 Ion exchange system 113
10.3 $^{233}UO_2$ Conversion Equipment 117

11. NUCLEAR SAFETY 126

12. RADIATION EXPOSURES 126
12.1 Principal Sources 127
12.2 Whole-Body Doses 128
12.3 Hand Doses 131

13. ACKNOWLEDGMENTS 131

14. REFERENCES 133

Page

15. APPENDIXES 135
    15.1 Appendix A: Qualification Data for Finished $^{233}UO_2$ Powder Shipped to BAPL 136
    15.2 Appendix B: Photographs of Conversion Equipment 142

THE PREPARATION OF KILOGRAM QUANTITIES OF $^{233}UO_2$ FOR THE LIGHT WATER BREEDER REACTOR DEMONSTRATION PROGRAM

J. R. Parrott, Sr.
W. T. McDuffee
R. G. Nicol
W. R. Whitson
A. M. Krichinsky

ABSTRACT

Oak Ridge National Laboratory, under contract with Bettis Atomic Power Laboratory (BAPL), recently completed the preparation of several hundred kilograms of ceramic-grade $^{233}UO_2$ for the Light Water Breeder Reactor (LWBR) Demonstration Program. The contract also included the recovery of ^{233}U from 29 tons of UO_2-ThO_2 scrap generated during pellet fabrication at BAPL. This report describes the various steps associated with the remote dissolution and purification (solvent extraction and/or ion exchange) of the scrap and oxide feed material and the conversion of the purified uranyl nitrate to ceramic-grade UO_2 powder. In addition, the nuclear safety, radiation exposures, and quality assurance aspects of the program are discussed.

1. INTRODUCTION

The work done by ORNL, under contract with BAPL, to prepare several hundred kilograms of ceramic-grade $^{233}UO_2$ for use in the LWBR Demonstration Program included:

1. performing studies with natural uranium to determine the operating parameters of the conversion process,
2. designing and installing conversion process equipment,
3. designing and constructing additional storage facilities for both ^{233}U oxide and nitrate solutions,
4. adding an ion exchange system for further purification,
5. designing and installing two dissolvers for the UO_2-ThO_2 scrap generated at BAPL, and
6. updating the existing solvent extraction system to increase reliability.

Although the feed material for the LWBR Program was unirradiated, the age of the recycled UO_2-ThO_2 made remote handling and dissolution prior to purification necessary, essentially duplicating the principal steps required in reprocessing oxide fuels for the Thorium Recycle Program.

Details of the operation, including nuclear safety and personnel radiation exposure data, are included.

2. SUMMARY

A total of 1543.6 kg of high-quality ceramic-grade $^{233}UO_2$ was prepared at ORNL under contract with Westinghouse-BAPL and transferred in 94 shipments to BAPL for fabrication into fuel for the LWBR. In addition, ∿28.6 metric tons (MT) of fabrication scrap pellets, powder, and grinder sludge was returned to ORNL and processed to recover the ^{233}U. An overall material balance of 99.8% was obtained for the program.

The stable $^{233}UO_2$ powder was prepared in 20- to 26-kg lots using ^{233}U source material (^{232}U content, 6 to 10 ppm) that had been prepared for this program at the Atlantic Richfield (Hanford) and Savannah River Plants and assembled at ORNL in the form of oxides and nitrate solutions. The feed source material, some of which had been stored as long as 5 years, was processed as nitrate solution by an ion exchange technique immediately prior to conversion to $^{233}UO_2$ to remove the ^{232}U daughters. Purified nitrate solution was converted into $^{233}UO_2$ powder at the rate of 6.3 kg per day in a glove-box facility using an ORNL-developed process outline that features precipitation of ammonium diuranate (ADU) from a low-acid (≤0.5 M) solution with NH_3 gas, separation and washing of the ADU cake by centrifugation, drying of the washed cake via microwave energy, and reduction of the dried ADU in hydrogen at 650°C. The powder was made stable to the atmosphere by contacting thin layers of the freshly reduced pyrolytic $^{233}UO_2$, as they flowed down a sloped trough, first with humidified argon and then with humidified air.

The stable $^{233}UO_2$ powder was packaged in stainless steel primary cans, each holding ∿400 g of powder, and shipped by truck upon request to BAPL as their need dictated; normally, this occurred within the 16-day period following completion of the ion exchange purification step.

The high quality of the $^{233}UO_2$ powder was ensured by the administration of a Quality Assurance (QA) Program developed at ORNL in compliance with contractual requirements and approval of BAPL. The QA Program included provisions for controlling the (1) quality of the feed materials, (2) manufacturing process parameters and reagents, (3) qualification of

the operating personnel, (4) calibration of the process equipment, and (5) inspections required for qualifying each lot of powder for shipment. Both the manufacturing process and the UO_2 conversion facility were qualified and approved by BAPL upon completion of a preproduction program in which approximately 20 kg of $^{233}UO_2$ powder was prepared and transferred to BAPL for testing in their fabrication facility. Of the total quantity of $^{233}UO_2$ powder produced (2030 kg) in the production program, only 99 kg failed to meet all specifications; none of the powder shipped to BAPL was rejected for failure to meet quality requirements.

Approximately 28.5 MT of binary ($^{233}UO_2$-ThO_2) fabrication scrap (as pellets, powder, and grinder sludge) was generated at BAPL and shipped to ORNL in 108 shipments for ^{233}U recovery. This material was dissolved in nitric acid to yield solutions containing a total of 711 kg of ^{233}U. In addition, a total of 40 kg of $^{233}UO_2$ powder consisting of sample residuals, glove-box scrap, and unused powder was returned to ORNL for dissolution in nitric acid and subsequent recycle.

The nitrate solutions generated by dissolving the binary fabrication scrap described above, plus all of the internal recycle materials generated in the purification and conversion processes, were processed by a solvent extraction flowsheet featuring 5% di-sec-butyl phenylphosphonate (DSBPP) in diethylbenzene (DEB) as the extractant; thorium in the feed solution is discharged to waste storage. Sixty-seven runs, each of about 1 week's duration, were required to complete this phase of the program. These runs yielded 1390 kg of ^{233}U, which was recovered as high-purity nitrate solution suitable for recycle to the $^{233}UO_2$ conversion process.

A total of 2710 kg of ^{233}U (including all recycle) was processed through the ion exchange purification system during the program in preparing $^{233}UO_2(NO_3)_2$ feed solutions sufficiently free of ^{232}U daughters that the conversion to UO_2 could progress in the unshielded conversion facility without excessive radiation exposure to operating personnel. Toward the end of the program (i.e., when the original feed source material had aged ~5 years), it was necessary to process the nitrate feed solutions through two cycles of ion exchange to obtain the required decontamination from ^{232}U daughters.

Radiation exposure to operating personnel--a single individual or the group as a whole--did not exceed the recommended maximum quarterly dose (1250 mrem) at any time during the program. Only one person received a weekly dose exceeding the recommended maximum; however, his quarterly dose was held to 1050 mrem, ~85% of the maximum.

The exposure of operating personnel to radiation varied directly as the production rate of the $^{233}UO_2$ powder; superimposed on this was the exposure received in unloading aged scrap materials from BAPL and charging them to the dissolvers. Obviously, the highest average exposures were received when these operations were in progress simultaneously. The maximum exposure to an individual was received during a period when one incompletely decontaminated lot of $^{233}UO_2(NO_3)_2$ was being converted to $^{233}UO_2$ while the conversion facility was operating at the maximum rate of 6 days/week. This lot of nitrate feed was derived from 5-year-aged source material; subsequent lots of the aged source material were given two cycles of ion exchange purification to alleviate the decontamination problem.

From a mechanical standpoint, the process equipment generally functioned as designed. Failure of the resin bed retainers in the ion exchange system led to their replacement with a new design. This modification was successful in eliminating the problem of failure under load.

Once the control parameters had been set in the preproduction phase of the operation of the conversion facilities, we experienced no failures that halted production. The reduction furnace functioned smoothly, and the hydrogen concentration in the argon-purged end enclosures never exceeded 5%.

Charging scrap to the glove boxes (and thence to the dissolvers) was a tedious and time-consuming task, resulting in a significant fraction of the radiation exposure to operating personnel even though the charging glove box was shielded. Frequent failure of the manipulators, as well as the restrictive capacity inherent in manipulator operations in opening and emptying cans of scrap, was a frequent occurrence. Thus, heavier manipulators and a sturdy, remotely operated can opening device are indicated for this type of operation.

The pellet crusher functioned satisfactorily in reducing the size of the larger pellets; however, the model and type used in this operation were difficult to adjust for varying pellet size and caused some delays in operation. Similarly, it was difficult to maintain the aperture setting during service.

The pellet crusher was not equipped with a hood to contain dust; this deficiency, along with the small fraction of pellets which was routinely ejected back into the box, resulted in a dirty and dusty operation that also contributed to the personnel exposure problem. A hooded feed system design is recommended for future use; in addition, the design should include provisions for a positive and convenient (for remote operation) aperture adjustment.

An operating summary for the LWBR Demonstration Program is presented in Table 2.1.

3. RECEIPT AND STORAGE OF FEED MATERIAL

The ^{233}U used in this program came from three sources: (1) material recovered from thorium (as metal and oxide) irradiated at the Atlantic Richfield Hanford Works (ARHW), (2) material recovered from thorium irradiated at the Savannah River Plant (SRP), and (3) a smaller quantity of stock $^{233}UO_2$ previously held at the Nuclear Fuel Services, Inc. (NFS) plant. Thorium oxide was irradiated specifically for this program such that the bred ^{233}U contained 5 to 10 parts ^{232}U per 10^6 parts uranium. The ^{232}U content of that portion of the material prepared at the SRP ranged from 5 to 8 ppm, while that from ARHW was slightly higher, ranging from 6 to 10 ppm.

The bred ^{233}U was separated from the thorium and fission products and recovered in facilities located at the respective production sites that previously had been used for processing irradiated normal uranium. Despite prior exhaustive facility equipment cleanout programs, early batches of the ^{233}U recovered in these facilities failed to meet the ^{238}U specification limit of 0.5% maximum. Such off-specification lots of material from ARHW were accumulated separately at ORNL and were not

Table 2.1. Operating summary for the LWBR Support Program

UO_2 conversion	
No. of batches produced	1,610
Total quantity produced, kg UO_2	2,030
Quantity failing to meet specs., kg UO_2	99
Reason for failure	
Above 250 ppm in Al	81
Above 50 ppm in N	18
Quantity rejected by BAPL	0
Scrap dissolutions	
No. of dissolution cycles	670
Gross weight of active scrap, kg	28,630
Thorium dissolved, kg	24,484
Uranium dissolved, kg	711
Solvent extraction purification	
No. of runs (1 per week)	67
Uranium purified, kg	1,390
Ion exchange purification	
No. of runs	110
Uranium purified, kg	2,710
No. of UO_2 shipments[a]	94
No. of scrap shipments received	108

[a]Shipments consisted of 0.5, 1.0, or 1.5 production lots each; total production lots = 86.

released to the LWBR Program.* None of the off-specification material produced at the SRP was transferred to ORNL.

The material produced at ARHW, packaged as nominal 1.5 M aqueous $UO_2(NO_3)_2$ solution in L-3 containers, was transferred to ORNL in 11 shipments during the last quarter of 1970. Upon arrival, the solution was weighed, sampled, diluted with water, and then transferred to one of the bulk solution storage tanks in the Liquid Storage Facility (Fig. 3.1). Six of the storage tanks were used for specification-grade material, and two for the remainder; one tank was kept empty at all times for emergencies. The final tank was filled with material from previous programs.

The SRP material was transferred to ORNL in nine shipments as U_3O_8 powder during the third quarter of 1970. Upon its arrival, the powder, which was packaged in cans containing ∿1 kg each, was sorted according to quality, that is, isotopic and impurity content (supplied by SRP) and stored in the Solids Storage Facility (Fig. 3.2) until needed.

3.1 Nitrate Solution from Hanford

Eleven shipments of uranyl nitrate solution, containing 600 kg of ^{233}U, were received from Hanford during the period October 1970--March 1971. The uranium concentration in the solution was 350 g/liter.

The solution was received in 3-liter polyethylene bottles (L-3), sealed in polyethylene bags, which were contained in 55-gal shipping drums (one bottle per drum, Fig. 3.3). The drums used were of the DOT-5330** and DOT-5795 series, acceptable for transport of fissile materials. All shipments were made by AEC truck.†

Each drum was delivered individually to the transfer room, where it was opened under the surveillance of operations supervision and Health Physics personnel. The plastic bottle was delivered, by hand, to a transfer glove box in an adjoining room if no contamination was found inside

---

*Late in the program, these materials were released by BAPL for use in the program and the ^{238}U specification was relaxed to 1.25%.

**Department of Transportation permit number.

†Now the U.S. Department of Energy (DOE).

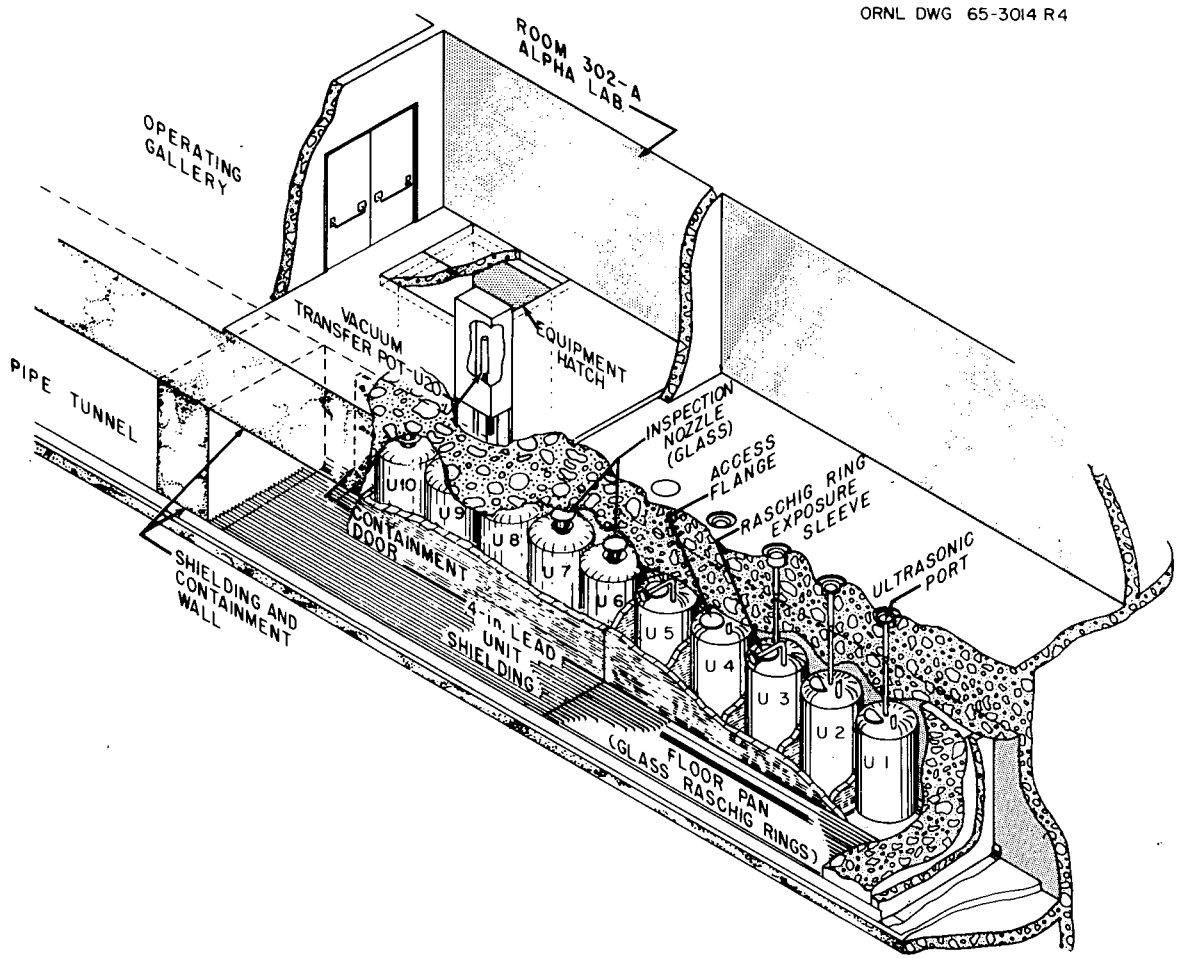

Fig. 3.1. ^{233}U liquid storage facility.

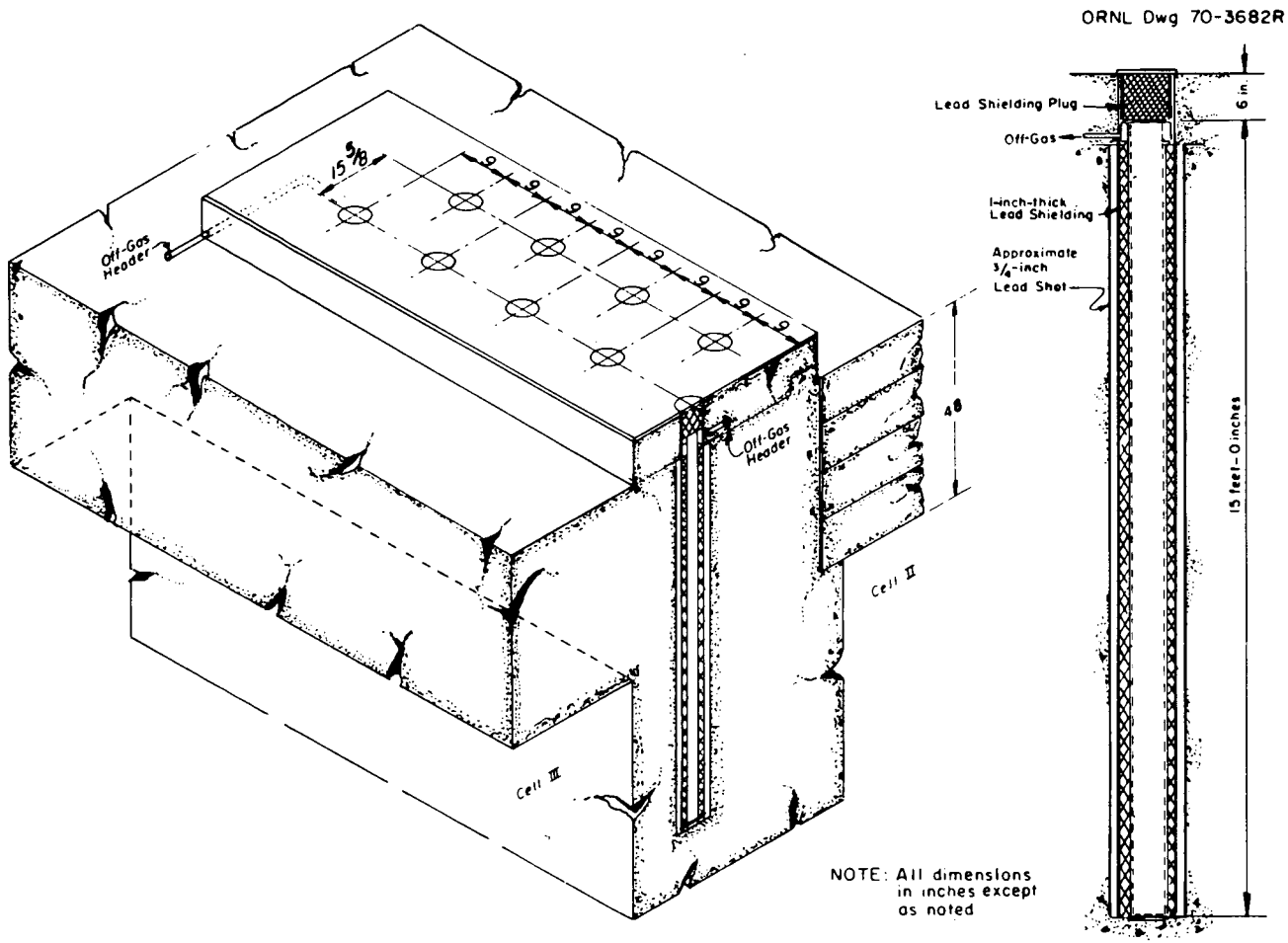

Fig. 3.2. Typical ^{233}U solids storage wells.

ORNL Dwg 78-20395

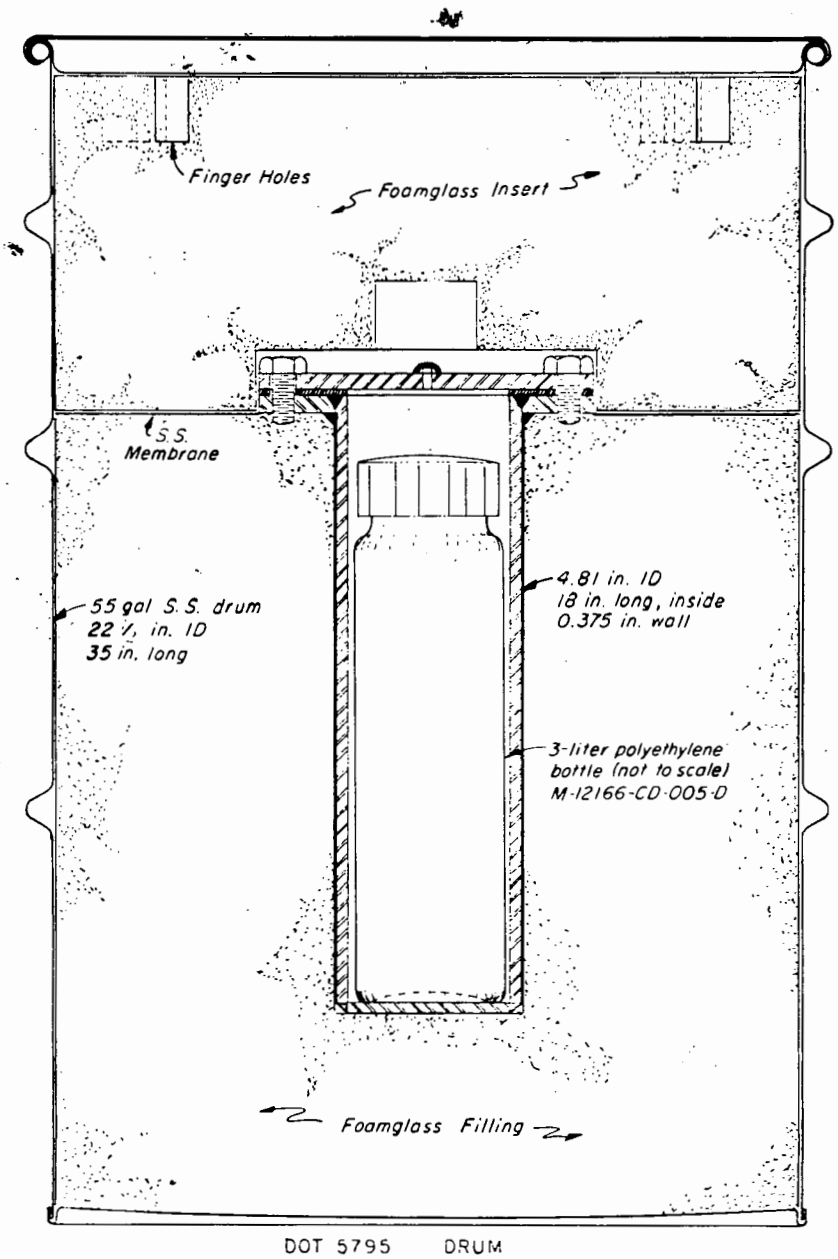

Fig. 3.3. ORNL foamglass shipping container with 3-liter bottle for solution.

the drum or on the bag holding the bottle. Then, the empty drum was closed and returned to the truck. If contamination was detected inside the drum, the drum was closed and transferred to a contamination zone where it could be opened and the contents repackaged. The repackaged solution was then hand-carried to the transfer glove box (mentioned previously), and the drum surfaces were decontaminated.

Each bottle of solution was bagged into the transfer glove box (Fig. 3.4) in the presence of operations supervision and Health Physics personnel, separated from the plastic bag used for containment, and uncapped. The bottle and its contents were weighed using a calibrated load cell. This weight was recorded on an instrument chart, along with the identification number of the bottle and the date. Every fifth bottle of a shipment of solution was sampled for analysis, which provided the basis upon which to verify shipper data.

The contents of each bottle was diluted with water to reduce the uranium concentration from 350 g/liter to 250 g/liter by draining 0.6 liter of demineralized water to a calibrated dilution tank having a capacity of 2.3 liters (located in the transfer glove box), followed by the vacuum-transfer of 1.5 liters of uranyl nitrate solution from the shipping bottle. The contained solutions were mixed and drained to a designated storage tank (Fig. 3.1). Then the dilution and transfer procedure was repeated, holding the ratio of dilution water to solution constant, until each bottle was empty. When empty, each bottle was rinsed with 0.1 liter of water. Finally, the rinse was transferred to the dilution tank before mixing. (Previous experiments had shown that about 0.1 g of uranium was left in the bottle after rinsing.)

The tare of the bottle was verified by weighing in the same manner as that used to obtain the gross weight. The empty bottle was then capped, bagged out of the box, and stored for disposal in 55-gal steel waste drums.

The above operation was repeated until the entire shipment had been stored. At this point, the samples were delivered to the Analytical Chemistry Division laboratory; full waste drums were sealed and delivered to the burial ground, and the shipping drums were placed on the truck for return to ARHW.

ORNL Dwg 78-20396R

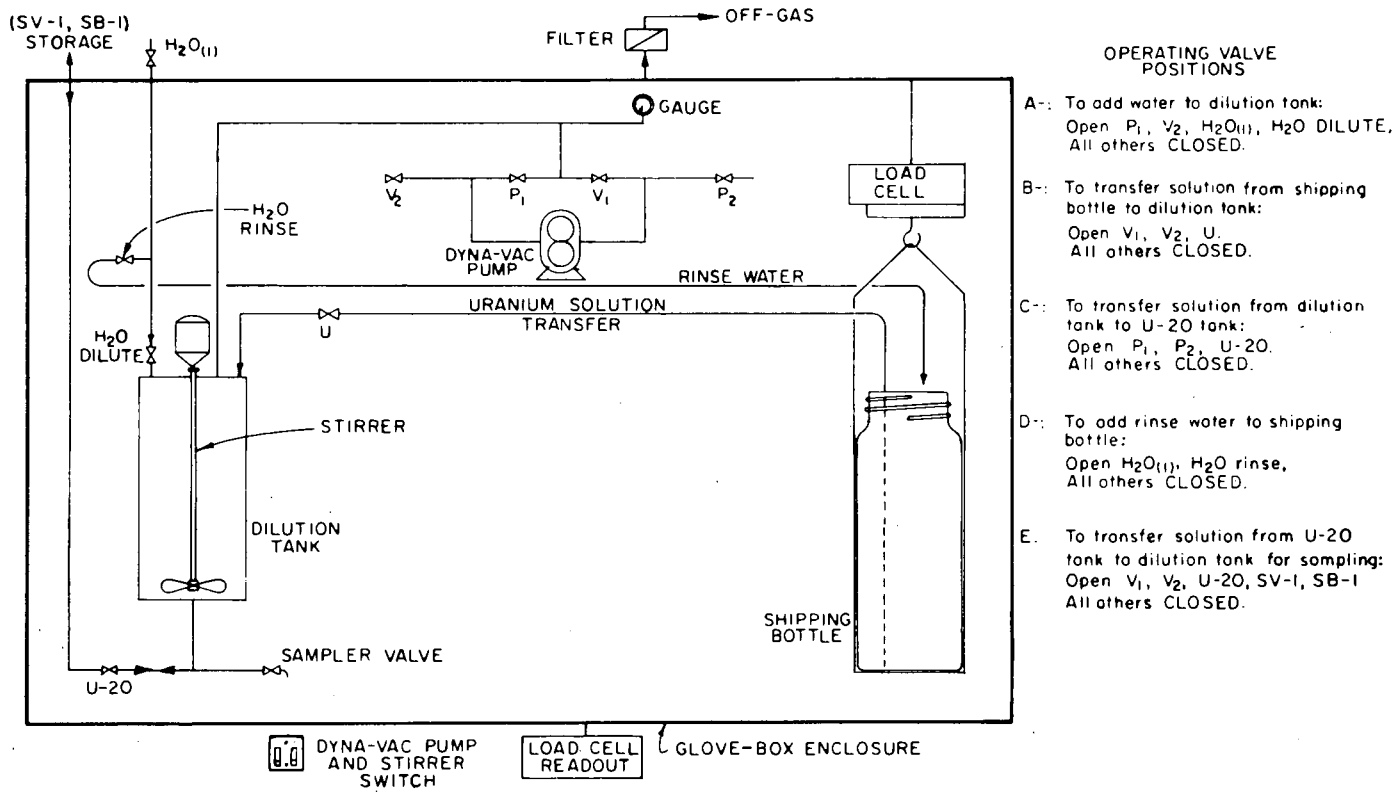

OPERATING VALVE POSITIONS

A-: To add water to dilution tank:
Open P_1, V_2, $H_2O_{(l)}$, H_2O DILUTE,
All others CLOSED.

B-: To transfer solution from shipping bottle to dilution tank:
Open V_1, V_2, U.
All others CLOSED.

C-: To transfer solution from dilution tank to U-20 tank:
Open P_1, P_2, U-20.
All others CLOSED.

D-: To add rinse water to shipping bottle:
Open $H_2O_{(l)}$, H_2O rinse,
All others CLOSED.

E. To transfer solution from U-20 tank to dilution tank for sampling:
Open V_1, V_2, U-20, SV-1, SB-1
All others CLOSED.

Fig. 3.4. Flow diagram for transfer glove box.

Toward the end of this program, we received several bottles of solution which contained an organic layer floating on the surface. The organic phase from each bottle was removed in the dilution tank, and the uranium present in the organic was removed by stripping with water. All aqueous phases (including original solution) were transferred to the storage tank, and the stripped organic was packaged for waste storage. Separation of aqueous and organic phases in this procedure was incomplete as noted by the hazy appearance of the separated aqueous solution and its abnormally high phosphorus content.

The contents of each filled storage tank were thoroughly mixed by air sparging and then sampled at the end of this phase of the program to confirm the shipper's data.

3.2 UO_3 from NFS and SRP

3.2.1 Unloading and storage

Approximately 36 kg of uranium (as oxide) was received in three shipments from NFS at Erwin, Tennessee, during March 1970. Also, ∿247 kg of uranium was received in nine shipments from SRP during the period June-August 1970. All of the oxide powder was received in tin-plated steel cans, each containing 0.6 to 0.8 kg of uranium. DOT-5330 shipping drums (similar to DOT-5795), which are acceptable for transport of fissile material and are large enough to hold two cans of oxide, were used in this effort. All shipments were made by AEC* truck.

On arrival at ORNL, the drums were transferred from the truck to the Penthouse and placed in the vicinity of a specified storage well (Fig. 3.2). The well was unlocked, each drum was opened, and the bottles were checked for air activity and surface contamination.

When both the drum and the well were verified to be clean by the Health Physics representative, a can was removed from the drum by using the vacuum can-lifting device (Fig. 3.5). The number on the can was read at a distance (to keep radiation exposure at a minimum) and compared with

---

*Now DOE.

ORNL Dwg 78-20397R

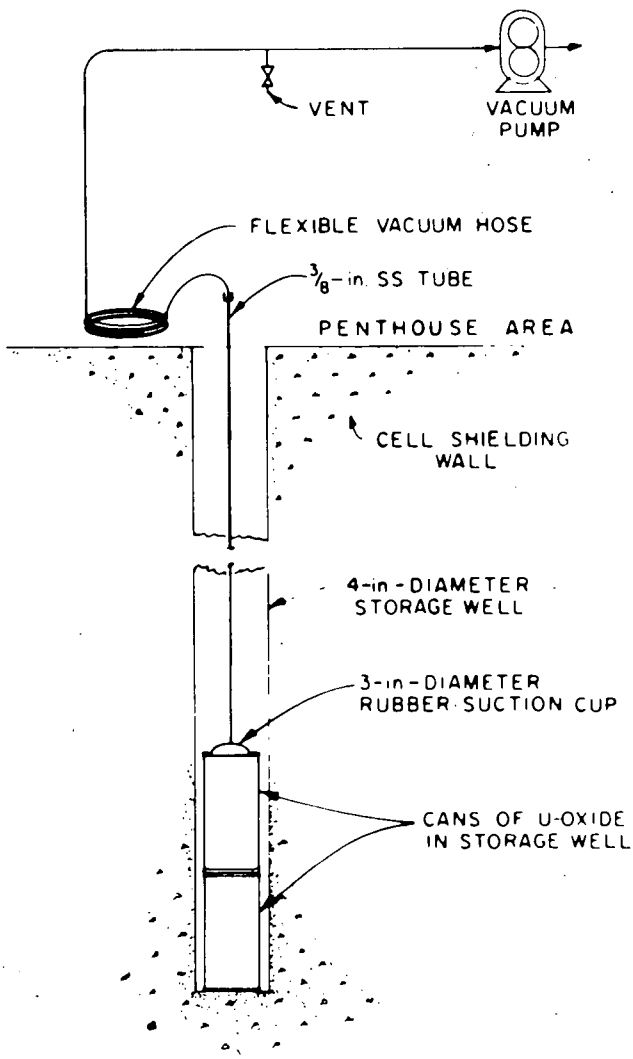

Fig. 3.5. Can-lifting device.

shipper's records. Then, the can was lowered into the well and allowed to rest on the one stored previously. Finally, the vacuum system was vented and removed from the well, and the operation was repeated until all drums were empty.

At the end of each transfer series, the storage well was closed and locked; the empty drums were then inspected, closed, and delivered to the truck for return to the shipper or stored for future use.

3.2.2 Dissolution

Most of the uranium received as oxide for the LWBR Demonstration Program was dissolved and used. Only 3 kg of uranium was rejected because of failure to meet purity specifications.

The oxide received from NFS and the first two shipments from SRP were dissolved in nitric acid in June and July 1970. The resulting solutions were sampled for accountability purposes and then stored in vessel U-5 (Fig. 3.1). The remainder of the acceptable oxide was stored and was not dissolved until July and August 1975, when the initial supply of stored uranyl nitrate solution had been converted to UO_2.

Oxide dissolutions were conducted in dissolver S-15, shown in Fig. 3.6, which was approved by the ORNL Criticality Review Committee to contain a maximum of 5.5 kg of ^{233}U at a maximum concentration of 400 g/liter. Each batch size was chosen to be close to 5 kg of uranium. With cleanout runs included, conversion of the SRP oxide to nitrate solution required about 60 dissolution cycles. An additional 40 dissolution cycles were completed to convert recycled oxide and ammonium diuranate (ADU) to solution. The recycled solids came from the conversion facility, BAPL, and the Analytical Chemistry laboratories.

The geometrically safe dissolver (Fig. 3.6) features two 4-in. stainless steel pipes in parallel joined by smaller piping at the top and bottom. One side contains a perforated stainless steel basket to hold the oxide solids and is surrounded by a 5-in.-diam pipe steam jacket. A sparger tube and a draft tube are provided to maintain rapid circulation and keep "fines" suspended during operation. The top of the cold side is equipped with a vapor-liquid separator which connects with the off-gas

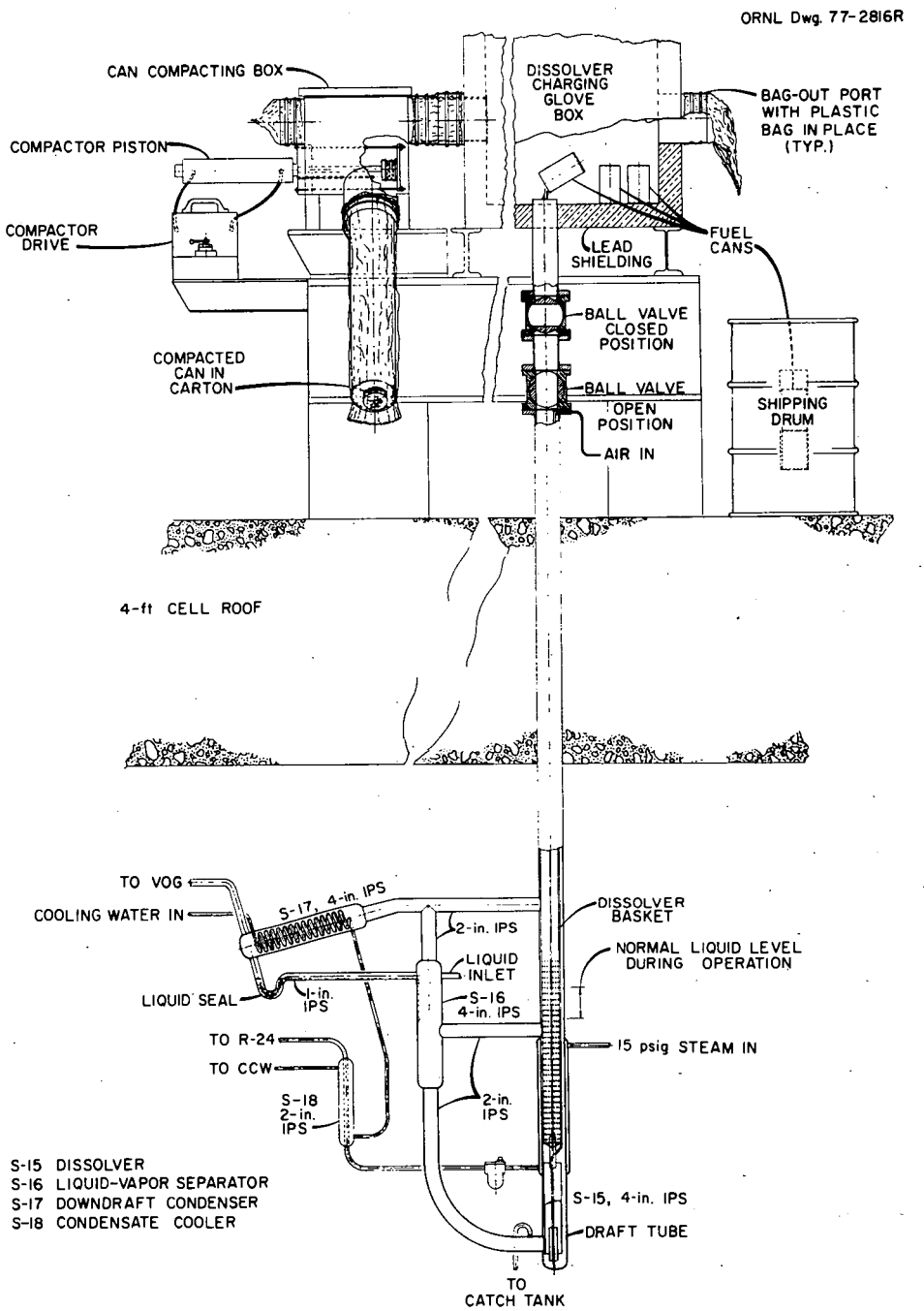

Fig. 3.6. Geometrically safe ^{233}U oxide dissolver.

system through a downdraft condenser. The condensate drains back to the cold leg through a hydraulic seal. As hot solution rinses and overflows to the cold leg, cold solution enters the hot leg at the bottom.

The dissolver charging operation includes bagging the cans of oxide into the shielded charging glove box, opening the can using a can opener and manipulators, opening the ball valves that isolate the glove box from the dissolver, dumping the oxide down the chute, and, finally, closing the ball valves. The ball valves are set to maintain a pressure differential between the charging box and the dissolver during the charging procedure. A radiation detector is used to verify that the powder has left the space between the valves when the bottom valve is opened.

The quantity of oxide or ADU solids to be charged to the system is chosen such that the total uranium content of the dissolver will be less than 5 kg, taking into account any holdup remaining from previous runs. Then the stoichiometric amount of reagent-grade 15.8 M nitric acid (HNO_3) required to dissolve the uranium is determined. The HNO_3 and demineralized water are added to the dissolver to yield a total volume of 14.0 liters, including the previous liquid heel. The oxide or ADU is charged while the temperature of the solution is held at about 50°C. The solution is sparged with air while the oxide is being charged.

At the conclusion of the charging operation, the solution is heated to ∿100°C (i.e., just below the boiling point). Both hot- and cold-leg temperatures are observed to be certain that thermosiphoning is in progress. When the density of the solution has remained constant for 2 hr, dissolution is considered to be complete, and the dissolver is allowed to cool. At 40°C, the solution is drained by gravity to an interim storage tank (R-35), where it is sampled and the volume measured.

If analytical results from samples of this solution show it to be acceptable for ion exchange, the solution is transferred to storage; if not acceptable (i.e., purification is required or the HNO_3 concentration is too high), the solution is transferred to the solvent extraction facility for removal of the excess acid and/or other impurities.

Following a dissolution campaign (a series of dissolutions conducted to solubilize a specific quantity of oxide), a cleanout run is

performed to provide uranium accountability data. At this time, water is poured down the charging chute to wash powder from the pipe wall. Excess HNO_3 is added, and the dissolution proceeds as described above.

3.3 Accountability

3.3.1 Solution

Accountability measurements were made, on receipt, of all ^{233}U solutions which came from ARHW. Each bottle of solution, contained in an L-3 polyethylene bottle, was weighed before being emptied and after the contents had been transferred to the storage system; each bottle was rinsed, drained, and dried before its tare was determined. A calibrated strain gauge was used for weighing. Preliminary tests in which we exhaustively rinsed the inside and outside of the empty bottles had shown that an average of 0.1 g of uranium remained in the bottles after the single rinse procedure was adopted. Accordingly, this quantity of material was assigned to each of the empty bottles which were transferred to the burial ground, and this amount was deducted from the quantity of uranium that was expected to appear in the storage tanks.

Samples of the solution were withdrawn for chemical analysis from every fifth bottle of each shipper's lot that was included in a shipment; in the event that a partial lot was included, at least two bottles of the lot were sampled. The shipper's lot was an entity of homogeneous solution established by the shipper.

The samples of solution were examined in the Analytical Chemistry Division laboratory for uranium concentration, isotopic uranium content, free acid concentration, and specific gravity. Selected samples from those lots which the shipper listed as having an isotopic uranium content that met specifications (Table 3.1) were also examined for impurity content. Based on the analyses of each lot as listed by the shipper, the uranium concentration of the solution was adjusted to 250 g/liter with water (including the practical rinse), and the diluted solution was transferred to the appropriate storage tank.

The total uranium content of each shipment was computed from the weight measurements and chemical analyses. The results (including NFS

Table 3.1. Isotopic uranium content: specification for feed source material

Isotope	Content (U basis)
^{232}U	≤10 ppm
^{233}U	>97.0 wt %
^{234}U	<2.5 wt %
^{235}U	<0.5 wt %
^{236}U	<0.1 wt %
^{238}U	<0.5 wt %[a]

[a]Late in the program, the ^{238}U specification was increased to 1.25% so that the material in tanks U-2 and U-3 could be used (see Table 3.2).

material) are compared with the shipper's measurements in Table 3.2. Since the precision of shipper's measurements can be assumed to be ∿±0.5% and that of the ORNL values to be somewhat higher (∿1%), the shipper's values were accepted.

3.3.2 Solids

The material obtained as U_3O_8 from the SRP site and from NFS was accumulated and held in the Solids Storage Facility, at the shipper's fissile values, until it could be dissolved in HNO_3. The material from NFS (accounted for in Table 3.2) and the first two shipments (of a total of seven) from SRP (accounted for in Table 3.3) were dissolved shortly after their receipt at ORNL. The remainder was dissolved 2 or 3 years later as the demand required.

Accountability measurements were conducted on the dissolver solutions after each nominal 5-kg (uranium basis) batch had been dissolved. Each container of oxide was selected for dissolution based on the isotopic composition and the impurity data reported by the shipper. As a rule, accountability determinations were performed on every two batches of dissolver solution that were combined in the receiving vessel. The uranium content of each combined batch of solution was compared with the total shown by the shipper in the powder charged to the dissolver, taking into account any powder that remained in the empty cans (average, ∿0.25 g per can). After the uranium isotopic composition and the impurity content of the combined batches had been verified to comply with specifications, the solution was transferred to (and accumulated in) one or more of the liquid storage tanks (U-5 through U-10). Results of accountability measurements of the uranium in the U_3O_8 powder from SRP used in this program are shown in Table 3.3. Since the precision of shipper's values can be assumed to be ∿±0.5% and that of the ORNL values ∿1%, the shipper's values were accepted.

4. ^{233}U PURIFICATION

Nitrate solutions of ^{233}U that had been generated in binary scrap (ThO_2-UO_2) dissolution operations (Sect. 8) or collected as high-acid

Table 3.2. Uranium solution shipments: feed source materials

		Quantity (kg)	
		Uranium	^{233}U
Shipper's measurements			
Nuclear Fuel Services		36.182	35.544
Atlantic Richfield Hanford Works		599.867	589.779
Total to account for		636.049	625.323
Receipts: ORNL measurements			
	Storage tank No.		
Rejected:[a]	U-1	8.604	7.996
	U-2	5.159	5.070
	U-3	102.785	100.613
Total		116.548	113.679
Accepted:	U-5	35.534	35.836
	U-6	100.825	99.243
	U-7	101.410	99.870
	U-8	100.870	99.357
	U-9	95.300	93.948
	U-10	81.859	80.638
Total		515.798	508.892
Measured losses to waste storage		0.658	0.648
Total accounted for		633.004	623.219
Difference		3.045	2.104
		(0.5%)	(0.3%)

[a]At the time of receipt, this material, a part of which was later used in this program, was transferred to the ^{233}U-pool account.

Table 3.3. Uranium solids shipments: feed source material

	Quantity (kg)	
	Uranium	^{233}U
Shipper's measurements		
Savannah River Plant	246.652	241.948
Receipts: ORNL measurements		
Dissolution		
Campaign 1	56.047	54.831
Campaign 2	140.055	137.143
Campaign 3	47.774	46.770
Total dissolved	243.876	238.744
Remainder (undissolved)	3.047	2.983
Total accounted for	246.923	241.727
Difference: (-) = gain	(-)0.271	0.221
	(0.1%)	(0.1%)

recycle material were purified by solvent extraction to recover the uranium. Those nitrate solutions which were essentially free of metallic impurities and were of low acid concentration (H^+/U mole ratio, <0.93) were purified by cation exchange to remove the residual thorium and to reduce the level of ^{232}U daughters sufficiently to permit conversion of the material to $^{233}UO_2$ (Sect. 5) in unshielded glove boxes without intolerable personnel exposure.

4.1 Solvent Extraction

The uranium contained in binary scrap and other highly acidic solutions was recovered by solvent extraction. Binary pellet and powder scrap (1 to 7% $^{233}UO_2$ in ThO_2) were returned from the fuel blending and pellet manufacturing facility (BAPL) as sintered oxides. The scrap was dissolved in 12 M HNO_3 catalyzed with fluoride to form an aqueous nitrate solution for solvent extraction (SX) processing. A typical dissolver solution contains 3 to 6 g of uranium and 250 g of thorium per liter and is 7 to 8 M in HNO_3; such solutions were adjusted to feed conditions specified in the SX flowsheet, which is described below.

4.1.1 Chemical flowsheet

Description. The Int-23* flowsheet (Fig. 4.1) is a one-cycle operation conducted in three 5-in.-diam pulsed columns to extract, respectively, the uranium from the nitrate solution, scrub traces of impurities from the extract, and strip the purified uranium from the scrubbed extractant.

The feed solution, which typically contains 140 g of thorium and 6 g of uranium per liter and is 4.5 M in HNO_3, was metered to the top of the extraction column (effective length, 34 ft) countercurrent to a dispersed organic phase, 5% DSBPP in DEB diluent; uranium was extracted into the organic phase while the thorium, ^{232}U daughters, and metallic impurities remained in the raffinate.

---

*The SX purification flowsheet used during this program is a variation of the Int-23 flowsheet, which was developed at ORNL in the late 1940s.

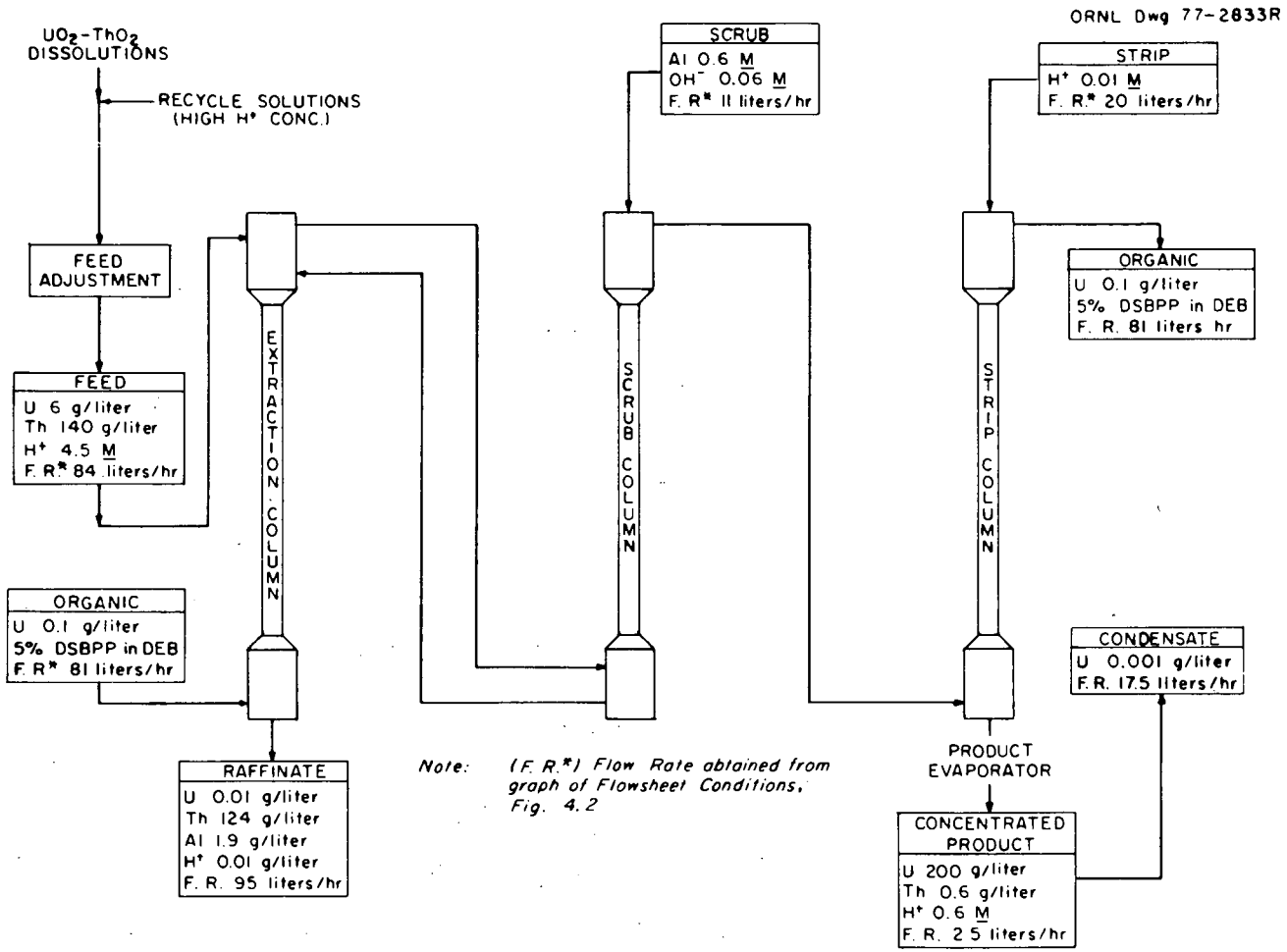

Fig. 4.1. Typical Int-23 flowsheet.

The pregnant organic phase leaving the top of the extraction column was then fed into the bottom of the scrub column (effective length, 12 ft), passing countercurrent to a stream of aqueous 0.6 M $Al(NO_3)_3$ which was 0.6 N acid deficient (AD). Entrained thorium and other ionic contaminants were scrubbed back into the aqueous phase. The exiting scrub stream was fed to the top of the extraction column.

The scrubbed organic was fed into the bottom of the stripping column (effective length, 21 ft), where a countercurrent stream of 0.01 M HNO_3 at 55°C stripped the uranium into the aqueous phase. Typically, the aqueous product stream contained 28 g of uranium per liter, 500 to 1000 ppm thorium (uranium basis), and was 0.05 M in HNO_3. This product solution was concentrated to ∿200 g of uranium per liter by evaporation prior to storage or subsequent processing.

Flowsheet development. The Int-23 flowsheet is a modified version of that used in the Kilorod program,[1] in which the concentration of DSBPP is increased from 2.5% to 5% and the composition of the scrub changed to 0.6 M $Al(NO_3)_3$--0.06 M AD. The uranium concentration in the feed varied from 3.2 to 8.8 g/liter, the thorium concentration from 111 to 170 g/liter, and the acid from 3.7 to 6.0 M, depending on the characteristics of the recycled material and dissolved scrap solutions.

Because of the wide range of feed compositions encountered in this flowsheet, the relative flow rates of feed, scrub, and solvent are allowed to vary as determined from Fig. 4.2. Extraction of >99% of the uranium and maximum separation of uranium from thorium are obtained with these conditions.[2]

4.1.2 Solvent extraction run procedures

Data from several typical solvent extraction runs are shown in Table 4.1. The quantity of uranium processed in a single run ranged from 4 to 40 kg. The average composition of the feed with regard to uranium, thorium, and acid concentrations (ranges in parentheses) was 6.34 (3.20 to 8.75) g/liter, 137.7 (111.0 to 213.0) g/liter, and 4.52 (1.68 to 6.0) M respectively.

The raw feed material was collected in a 1500-liter feed adjustment vessel. Adjustment to ∿4.5 M feed acid content and a Th/U mole ratio of

ORNL Dwg 77-2834R1

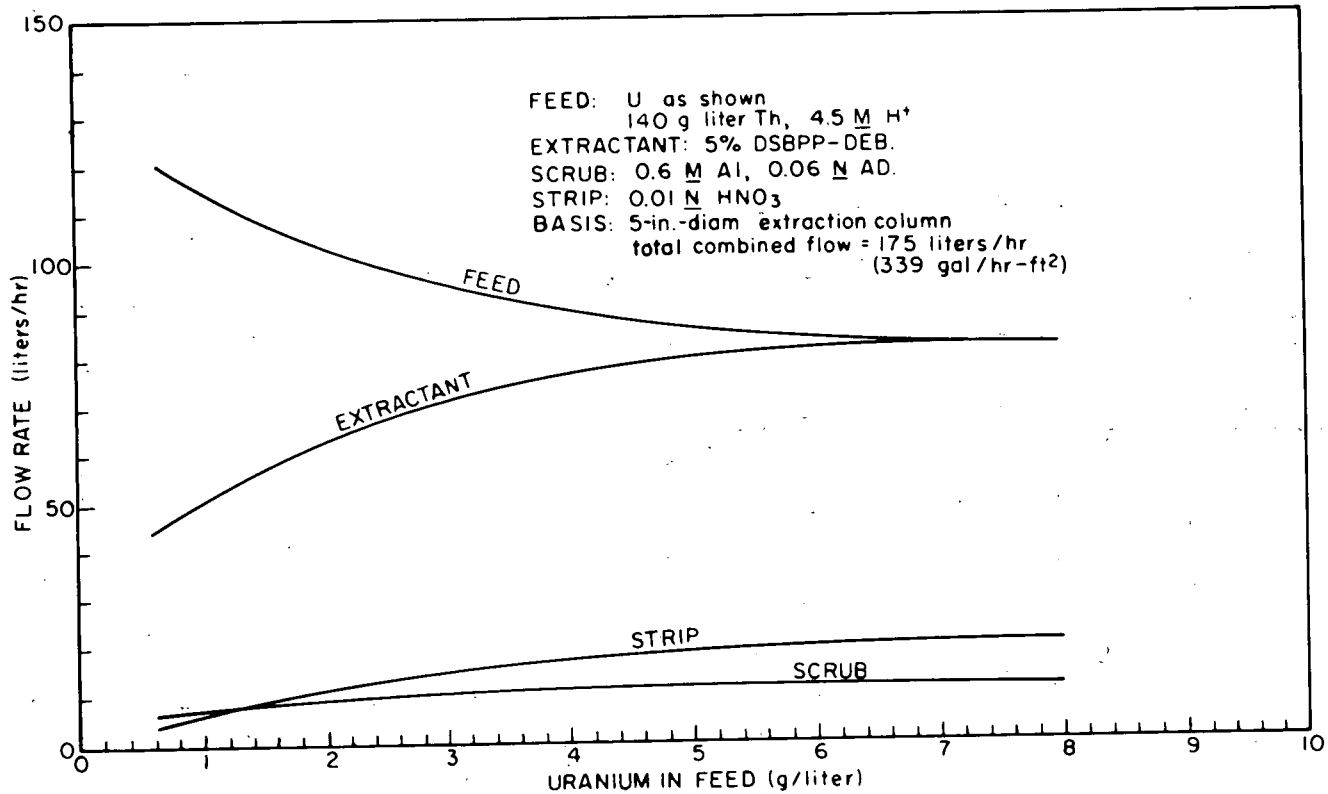

Fig. 4.2. Flowsheet conditions for recovering ^{233}U from aqueous solution with 5% DSBPP-DEB.

Table 4.1. Data from typical solvent extraction runs

Run No.	Feed composition U (g/ℓ)	Feed composition Th (g/ℓ)	Feed composition H^+ (M)	Flow rates, feed/org/scrub/strip (ℓ/hr)	Product U (g/ℓ)	Product Th (g/ℓ)	Product H^+ (M)	Uranium loss (% of feed)
SX-3	8.19	148.5	4.5	82/81/11/20	194.35	1.25	0.45	1.04
SX-13	5.86	111	4.03	83/85/13/20	204.1	0.71	0.61	0.27
SX-19	7.31	127	4.31	80/82/15/21	191.0	0.30	0.4	0.52
SX-51	6.06	149.4	4.98	61/67/9/20	229.7	0.36	0.66	0.84
SX-61	7.09	140	4.4	63/67/9/20	217	0.14	0.30	0.60

greater than 17 (for criticality control; see Sect. 11) was completed prior to transfer to the feed tank. A feed batch would typically contain solutions from binary scrap dissolution and the recycle material generated from solvent extraction, ion exchange, and oxide conversion operations.

Feed, organic, scrub, and strip solutions were metered to the system at ratios determined by the graph in Fig. 4.2. The relative flow rates were maintained at or near these levels during the time uranium-bearing feed was pumped to the system.

The solvent extraction system startup procedure began with establishing hydraulic equilibrium in the columns. This included setting scrub and strip flows after which the organic stream flow was established. After hydraulic equilibrium had been attained, feed was introduced into the system. The product solution was routed to recycle during startup and until 4 hr after the feed solution was introduced. Startup (to the point of feed introduction) usually required less than 3 hr of operation.

Early in the program, the SX system startup procedure included the use of thorium feed (130 g Th/liter, 4.5 M H^+ as nitrate solution, with no uranium present). This feed was introduced simultaneously with the scrub and strip streams to establish all aqueous flow rates. Organic solution was then introduced, followed by uranium-bearing feed. The use of thorium feed to eliminate uranium from the organic phase was originally thought to be required for optimum SX system performance. However, this was later determined to be unnecessary, and its use was eliminated from the startup procedure.

Shutdown procedures for the solvent extraction system were implemented upon exhaustion of the uranium-bearing feed. The system was operated with all streams (except feed) at flowsheet rates to scrub and strip residual metal ions from the organic inventory. This procedure was continued for a period of 4 hr to permit treatment of all the organic inventory. During this period of shutdown, the uranium product solution was routed to the product vessel since the Th/U and the H^+/U ratios were still low. The scrub solution flow was then stopped, and the strip solution continued to deplete residual metal ions from the organic solution. (Scrub flow was discontinued in order to maintain a high-density raffinate

solution in the jack leg and to facilitate establishment of column interface during subsequent system startup.) The stripping of organic continued for an additional 4-hr period. During this interval, the uranium product solution was collected for recycle since it contained increasing amounts (relative to uranium content) of thorium and acid.

The final step during shutdown was to displace the organic solution from the three columns. Scrub and strip streams were pumped to the respective columns, while the organic supply was discontinued until the bulk of the organic phase in each column had been displaced. The entire procedure required ∿12 hr.

Early in the program, the shutdown procedure included the use of thorium feed to deplete uranium from the organic phase; however, this step was found to be unnecessary and was thus eliminated.

New extractant was treated, prior to use in the solvent extraction system, to remove accompanying impurities generated during its manufacture. A volume of new solution (5% DSBPP in DEB) was scrubbed with 0.1 volume of 0.1 M Na_2CO_3 solution followed by 0.1 volume of 0.2 M HNO_3. It should be noted that DSBPP is less prone to radiation degradation than other, more widely used extractants[3] (e.g., tri-n-butyl phosphate), thus obviating continuous organic treatment (i.e., carbonate scrub).

4.1.3 Solvent extraction system performance

Uranium product. The uranium product stream from the stripping column was evaporated to achieve final concentrations ranging from 103.9 to 294.4 g/liter. Thorium contents of the products varied from ∿300 to 11,400 ppm (uranium basis). (In one run, the thorium concentration amounted to 50,000 ppm as the direct result of a mechanical problem cited below.) More complete thorium removal during solvent extraction was limited by the extraction column length and indications of poor efficiency, which were probably the result of corrosion in the column after 23 years of usage. The H^+/U mole ratio in the product, ranging from 0.24 to 1.59, is of prime importance for subsequent ion exchange processing. The flowsheet specification for ion exchange required that this ratio be less than 0.93, while the flowsheet for ^{233}U conversion specified a range of 0.18 to 0.93.

Despite several solvent extraction runs which yielded products with H^+/U ratios of >0.93, product blending permitted the use of all solvent extraction product solutions in subsequent operations.

Mechanical problems were the primary cause of variations in the quality of the product solutions collected during each run. Poor pulser and solution-pump performance plagued solvent extraction operations during much of the program (see Sect. 10.2). Unsatisfactory pulser operation resulted in a decrease in contact between the phases in the columns, while inconsistent performance of the aqueous solution pumps caused varying relative flow rates of the interacting solutions. These malfunctions, in varying degrees and combinations, resulted in higher thorium and free acid concentrations in the product.

The use of new, freshly prepared organic solution also appeared to affect the quality of the SX product. We suspect that fresh solvent contains an unidentified constituent, not eliminated by pretreatment with the Na_2CO_3 and the dilute acid washes, which reduced its selectiveness for uranium. This suspicion was confirmed by the reduction in decontamination from impurities observed in the uranium product after the addition of fresh organic. For example, all of the organic solution was replaced after Run SX-24, while ∿50% of the system's organic inventory was replenished after Runs SX-41 and SX-55. The decontamination of uranium from thorium was, respectively, 62, 25, and 55% of the average decontamination experienced for similar operating conditions with "old" organic. The effect of adding new organic to the system appeared to persist for ∿300 hr of operation.

It should be noted that the content of certain metallic impurities had a direct bearing on the overall quality of the final SX uranium product (Sect. 6.1). One such metallic impurity, directly introduced by SX operations, was aluminum. Since the scrub is a basic aluminum nitrate solution, careful control of its flow as well as its interface level in the scrub column was paramount to maintaining the aluminum content of the product within specifications (<250 ppm, uranium basis). As expected, the excessive entrainment that occurred when the aqueous-organic interface in the scrub column rose above its predetermined level resulted in higher

aluminum contents of the uranium product solutions. In three runs, the aluminum contents of the products analyzed 285, 275, and 325 ppm (uranium basis). However, blending permitted the use of all the SX product solutions generated.

Uranium waste. Uranium losses to the aqueous raffinate average from 0.2 to 1.0% of the feed (calculated from end-of-run material balance values), with occasional losses exceeding 1.5%.

Evaluation of instantaneous uranium losses to the raffinate could be correlated with perturbations in uranium feed composition. The highest losses occurred when the uranium feed concentration was suddenly lowered. Such a condition would commonly occur as the result of refilling a nearly empty feed tank with a new batch of feed solution less concentrated in uranium.

To minimize the effects of such perturbations, the 1150-liter feed tank was refilled (during the runs after SX-56) to its working capacity after each ∿200-liter volume of feed had been processed (instead of the former practice of refilling it just before the contents were depleted). This change in procedure had the effect of gradually transforming the feed composition from that of the feed tank to that of the feed adjustment vessel. More consistent and substantially decreased losses (∿0.6% of feed) were observed as a result.

Mechanical difficulties also influenced uranium losses. Occasionally, inefficient pulser and solution pump performance reduced the degree of mixing (and hence the degree of extraction of uranium from feed solutions in the extraction column); similarly, mechanical inefficiencies permitted a higher uranium content in the organic leaving the stripping column. Since there was no subsequent treatment of the spent organic (i.e., carbonate scrub), the organic phase entering the extraction column had a higher uranium concentration, which led to increased uranium in the raffinate.

Relative flow rates of the interacting solutions influenced uranium losses as well as product quality. In particular, an excessive flow rate of scrub solution altered conditions in the extraction column (due to the basic nature of the scrub solution) such that extraction of uranium into the organic was reduced.

Another factor influencing uranium losses was the entrainment of aqueous out the top of the stripping column. This resulted in an aqueous phase being pumped with the organic to the bottom of the extraction column. The aqueous would join the raffinate and become part of the waste solution. Since the aqueous-phase uranium concentration was high (its uranium content was determined by chemical conditions in the strip column), this addition to the raffinate significantly increased the total uranium rejected to waste.

Free acid content of the feed appeared to affect the extraction of uranium. Lower free acid concentration in the feed was accompanied by some increase in uranium losses to the raffinate, which is in agreement with early equilibrium studies for the DSBPP extractant.

Perhaps the most significant cause of high uranium losses to the raffinate stream is inefficient column operation due to mechanical failure (i.e., "channeling," oversize holes in the pulse plates due to corrosion or erosion, or loss of plates). The column has been in operation for over 20 years, and calculations show that the plate height of 34 ft is sufficient to provide a uranium loss of 0.1%.

4.2 Ion Exchange

Uranyl nitrate solutions were purified by cation exchange to remove ^{232}U daughters and to permit conversion to $^{233}UO_2$ within unshielded glove boxes. Aged uranyl nitrate solutions contained sufficient amounts of ^{232}U daughter products to preclude their direct handling without further purification. As previously noted (Sect. 3), the uranium in the feedstocks collected for this program contained ~97% ^{233}U and 5 to 10 ppm ^{232}U (total uranium basis). The ^{232}U decay chain (Fig. 4.3) includes several alpha- and beta-emitting daughters concluding, about one-third of the time, with ^{208}Tl, which decays to ^{208}Pb by beta emission accompanied by a 2.6-MeV gamma. This energetic gamma precluded direct handling since harmful gamma exposures to operating personnel would result; therefore, its effect was reduced. By interrupting the decay chain, through the removal of ^{228}Th and ^{224}Ra, and permitting the other daughters to decay at a rate dictated by ^{212}Pb with its 10.6-hr half-life, temporary relief from the 2.6-MeV gamma was provided.

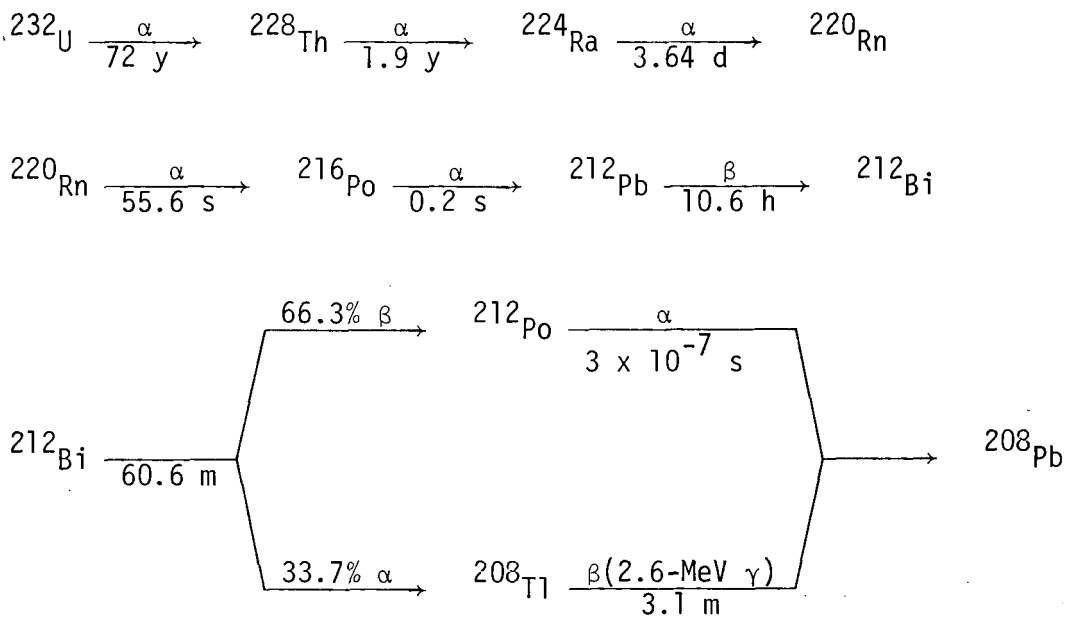

Fig. 4.3. Uranium-232 decay chain.

A plot of relative ^{232}U daughter activity (as a function of time following removal of thorium and varying amounts of radium) is shown in Fig. 4.4. Each curve originates at a relative gamma activity of 1.0, which represents ^{232}U in equilibrium with its daughters. It has been shown that ^{233}U containing up to 10 ppm ^{232}U and less than 2% of the equilibrium gamma can be handled in unshielded glove boxes without over-exposure of personnel.[4] Therefore, it may be seen that removal of all of the thorium and >95% of the radium from equilibrated feedstock (<10 ppm ^{232}U) would result in uranium which can be processed in unshielded glove boxes during the period of 1 to 3 weeks after interrupting the decay chain.

ORNL DWG 71-3880 R3

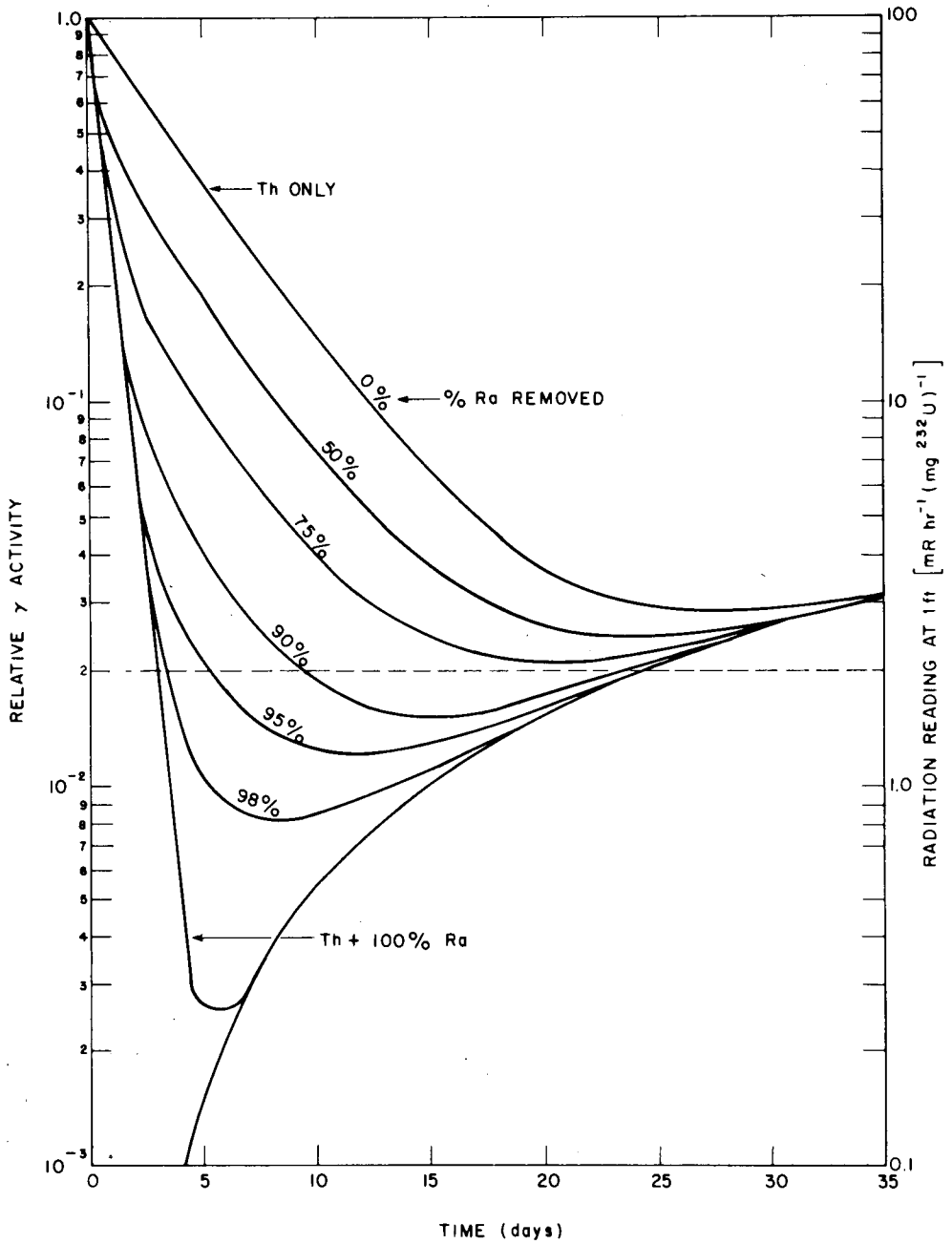

Fig. 4.4. Predicted ^{232}U-daughter gamma activity as a function of age and ^{228}Th-^{224}Ra removed.

4.2.1 Ion exchange flowsheet

Description. A schematic ion exchange flowsheet is shown in Fig. 4.5. The solution vessels included two feed tanks (115 liters each), two sets of product tanks (each of 180-liter capacity and consisting of an assembly of 4-in. pipe tanks on common manifolds), and elution catch tanks. The ion exchange column, which was fabricated from 4-in. sched 40 stainless steel pipe, was designed to hold 9 liters of resin. To retain the resin within the column, a sintered stainless steel disc (10-μm mean pore size) with a perforated support plate was held in place at each end by bolted-on flanges. A 12% cross-linked cation exchange resin (200 to 400 mesh), charged to the column as an aqueous slurry, was used in this system.

Development. Cation exchange methods had previously been developed for separating thorium from uranium, but the effectiveness of radium removal had not been determined. Laboratory-scale (about 1/2000 of plant scale) experiments were conducted at ORNL[5] to determine the effectiveness of this method for separating radium and thorium from uranium. These experiments showed that purification by cation exchange of $UO_2(NO_3)_2$ solution containing <10 ppm of ^{232}U, aged 1 year, yielded a uranium product solution which would be acceptable for direct handling 2 days after purification. This represented a removal of >99% of the ^{228}Th, ∿98% of the ^{224}Ra, and ∿50% of the ^{212}Pb from the feed solution.

In scaling this system to plant size, a resin retention system was developed to permit reverse-flow operation. Quoting from ORNL-4731, by R. H. Rainey:

> The use of fine, uniformly sized resin, resulting in a high pressure drop across the resin bed, made a simpler design possible. The resin column was equipped with stainless steel frits at each end to contain the resin in the column. The space between the 2 frits was nearly filled with resin leaving only enough free space to ensure that the resin, in its most expanded form, did not exceed the space provided. With a glass column of this design, we demonstrated that, when flow was reversed, the resin bed merely slid up and down the column in the form of a compact cylinder. No detectable mixing occurred.[5]

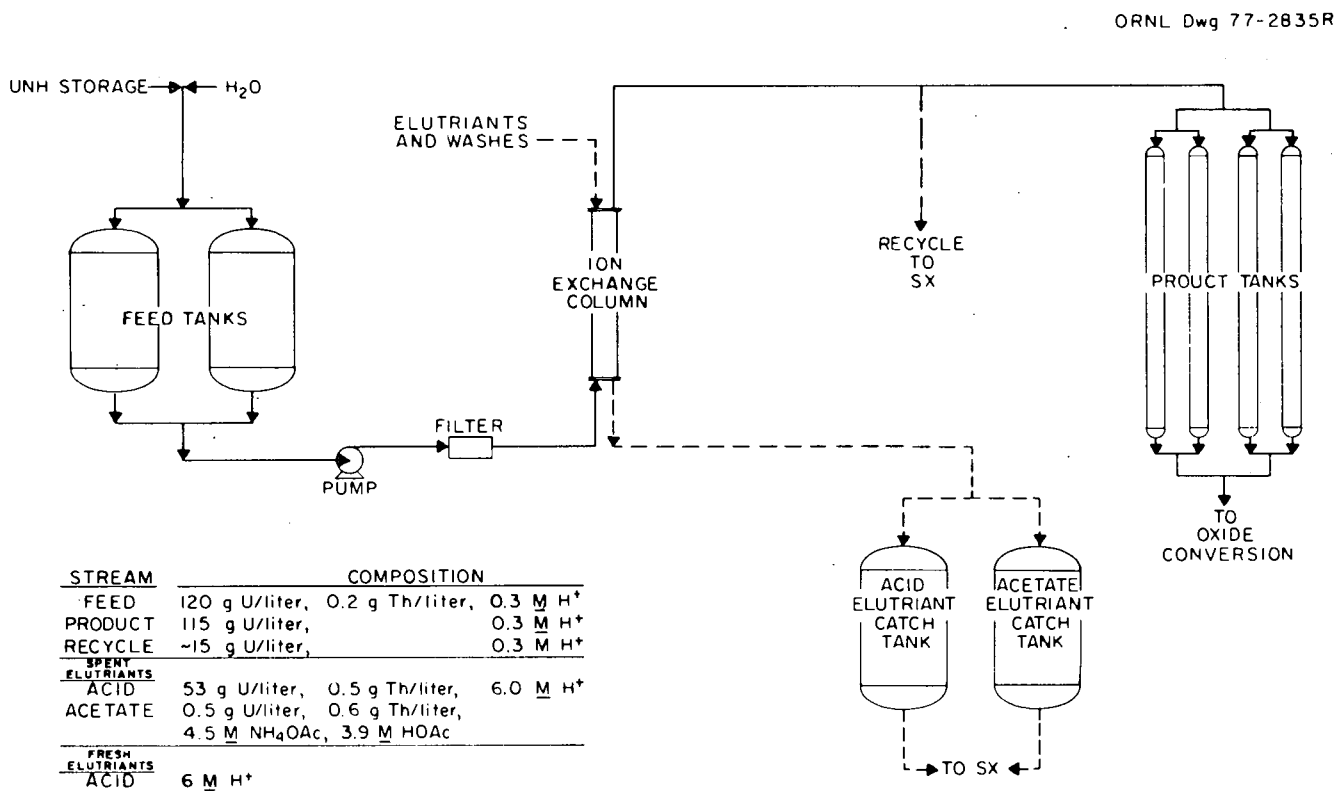

STREAM	COMPOSITION		
FEED	120 g U/liter,	0.2 g Th/liter,	0.3 M H^+
PRODUCT	115 g U/liter,		0.3 M H^+
RECYCLE	~15 g U/liter,		0.3 M H^+
SPENT ELUTRIANTS			
ACID	53 g U/liter,	0.5 g Th/liter,	6.0 M H^+
ACETATE	0.5 g U/liter,	0.6 g Th/liter,	
	4.5 M NH_4OAc,	3.9 M HOAc	
FRESH ELUTRIANTS			
ACID	6 M H^+		
ACETATE	4.5 M NH_4OAc, 3.9 M HOAc		

Fig. 4.5. Ion exchange flowsheet.

Most conventional column designs have employed mechanical systems, such as springs, to keep the resin bed stabilized and prevent fluidization of the bed during reverse flow.

4.2.2 Run procedures

Typical procedures. A total of 89 production runs were made using the following typical procedure:

Prior to the run, the resin was treated with 6 M HNO_3 to ensure that it was in the H^+ form. Next, the bed was flushed with water to remove the free acid. The feed, a nitrate solution containing typically 120 g of uranium and 0.2 g of thorium per liter and 0.3 M in H^+, was then pumped at the rate of 0.5 liter/min through the resin column at ambient temperature. The resulting pressure drop was 50 psi. The effluent from the feed volume equivalent to the first 2.5 kg of uranium pumped to the column was diverted to recycle since it was collected during resin conversion to UO_2^{2+} form. (This practice was necessary to obtain purified solution which met the uranium concentration specification.) After all of the feed had been processed, water was passed through the resin bed to displace the interstitial volume and the line holdup of purified uranyl nitrate solution to the product tank. This was followed by a 6 M HNO_3 wash at 60°C to desorb the remaining uranium from the resin and then by a 4.5 M ammonium acetate (NH_4OAc)--3.9 M acetic acid (HOAc) wash at 60°C to elute the remaining ions (principally thorium). Resin pretreatment and elution were conducted with the solutions flowing down through the column, while feed purifications were performed in the upflow mode. These runs typically yielded product containing ∿90% of the uranium in the feed, ∿10% that was recycle, and <0.2% as waste. Data from several ion exchange runs are shown in Table 4.2.

Adjustment of feed solutions. Solutions to be used as feed to the ion exchange column were collected, blended, and adjusted to flowsheet specifications in the feed tanks. Sources of the feed included SX product solutions, dissolved $^{233}UO_2$ powder, and stored UNH solutions. Blending was required to prevent overburdening the ion exchange column with thorium and to take advantage of some observations and development described below.

Table 4.2. Data from typical ion exchange runs

Run No.	Feed composition					Radium in product (% of feed)
	U (g/ℓ)	Th (g/ℓ)	H^+ (M)	Total radium (Ci)	Volume (ℓ)	
IX-107	104.66	0.011	0.14	0.138	184.1	40
IX-114	110.24	0.24	0.28	0.538	181.0	3
IX-129	110.05	0.535	0.305	0.504	173.7	15
IX-145	132.56	0.066	0.27	0.040	196.2	60
IX-178	123.38	0.041	0.23	0.773	223.7	27

Equation (1),

$$Th^{4+}_{roc} = K \frac{[Th^{4+}]}{([Th^{4+}] + [UO_2^{2+}] + [H^+])^3}, \qquad (1)$$

where

Th^{4+} = resin operating capacity, moles,

K = empirical constant,

[ ] = ion concentration, equiv/liter,

was developed from theoretical considerations and empirical observations to describe and predict the operating capacity of the ion exchange resin for thorium (Th^{4+}_{roc}) as directly proportional to the thorium concentration and inversely proportional to the third power of the total normality of the feed solution. It has been used to reliably predict column performance with respect to thorium sorption for each of the 89 ion exchange runs conducted.

When the resin operating capacity for thorium was related to the total thorium in the feed lot, a factor describing the relative excess resin operating capacity for thorium (Th_{reroc}) resulted (i.e., $Th_{reroc} = Th^{4+}_{roc}/Th^{4+}_{feed}$). This factor (in its percentage form) was then used in Eq. (2) to estimate the expected percent radium removal:

$$\% \text{ Ra removal} \doteq \% \; Th_{reroc} - 44\%. \qquad (2)$$

This relation was developed from data generated during equilibrations of resin with uranyl nitrate solutions containing low concentrations of metal ions.[1] This method of estimating radium removal proved to be accurate to within 5% of the observed radium removal in 30% of the runs investigated and within 30% in two-thirds of the runs. In every case where the predicted radium removal was not within 5%, the observed radium removal was less than that predicted. This was believed to be caused by the cross-mixing of ion exchange product with solution heels left in product tanks from earlier runs.

After Run IX-143, the ion exchange system was capable of processing two different feeds — with respect to H^+, Th^{4+}, and UO_2^{2+} concentrations — within a single run. Making use of this flexibility, we specified

different concentration requirements between the first and second halves of the feed to enhance the resin operating capacity for thorium. Application of Eq. (1) showed that dilution (to lower "$[UO_2^{2+}] + [H^+]$") accompanied by increased thorium concentration, by feed blending or Th^{4+} addition, could significantly increase the resin operating capacity for thorium. When this adjustment was restricted to the latter part of the feed, its effect was to allow larger feed batches to be treated at higher average uranium feed concentrations. (This was an important consideration since limitations on process tank volume restricted run capacity, and since a minimum uranium product concentration had been specified.) This technique was successfully applied, using ^{232}Th as the thorium additive, in several runs where calculations prior to this feed adjustment indicated that substantial amounts of thorium (and consequently radium) would have been eluted into the product.

As the program proceeded, it became necessary to utilize large stocks of low-thorium-bearing UNH solutions which had aged 4.5 years since purification and which, therefore, contained ∿86% of their equilibrium gamma activity. These solutions could not be directly used as ion exchange feed, in lot sizes required to maintain the desired production rate, since excessive quantities of ^{224}Ra would have been eluted into the product. However, if such solutions could be stored for ∿30 days after purification, instead of the usual 3 to 4 days allowed with the normal 20 to 25 kg of uranium production batch, most of the ^{224}Ra would decay. Accordingly, a two-step approach was taken in which the aged UNH solutions were partially purified in large batches (∿100 kg each at ∿150 g U/liter, ∿0.2 $\underline{M}$ H^+) and the products stored for ^{224}Ra decay. Later, production batches were taken from these to provide fully purified solutions for feed to the UO_2 conversion system.

Prior to the implementation of this procedure, a mean dose rate of 5.3 mR/hr was observed at 1 ft from an oxide-line process vessel containing a nominal 1.2 kg of uranium in nitrate solution; with the previously processed product, the mean dose rate was reduced by 35% to 3.4 mR/hr.

System modification. The system described above is a modification of the earlier version, which employed two resin columns piped in series. The first column (2-liter) was subjected to feed solutions in the upflow

mode, while the second column (3-liter) was operated in the downflow mode. (Pretreatment and elution of both columns were conducted downflow.) Startup with this system was frequently plagued by air locks, due to air accumulated in the resin bed, especially in the downflow mode. This resulted in channeling in the resin bed and a reduced column efficiency, as well as an increased pressure drop.

The two-column system was also found to be inadequate for purifying the older (longer-aged) feeds as the program continued. It became necessary to process feed solutions containing thorium at significantly higher concentrations than those for which the system was designed. Insufficient radium removal was observed, indicating the lack of insufficient resin volume.

Some mechanical problems were encountered with the older system. These problems and their solutions are described in Sect. 10.2.

4.2.3 Performance of the ion exchange system

Product solutions. Purified ion exchange product solutions were prepared 4 to 5 days prior to their intended use as purified feed for conversion to oxide. Typically, the product solution had a uranium concentration of 115 g/liter, was 0.3 M in H^+, and contained no thorium (within the limits of detection by mass spectrometry). Each lot of purified product solution was analyzed for H^+, uranium concentration, uranium isotopic distribution, and metallic impurities prior to release to the conversion process.

Radium removal was determined by comparing the gamma activity growth-decay curve (after correction for initial feed activity) with the calculated curves (Fig. 4.2). An average of 70% of the feed radium was sorbed on the ion exchange resin during each run. In some cases, relatively young feeds exhibited low radium removal, which was attributed to contamination by product tank heels remaining from the previous run.

Thorium was detectable (but well within ion exchange product specifications) in three product solutions (IX-102, -105, and -109). Each of the corresponding runs was conducted using the two-column system, which was later determined to be inadequate to meet conversion feed specifications. One of the product solutions (IX-105) resulted in an average radiation

exposure of 136 mrem/man-week to operating personnel during oxide conversion.* This was the only week during the entire program that the average dosage received by operating personnel exceeded the established exposure limit (100 mrem/week). Conversion of the other two lots of uranium did not result in exposures above 100 mrem/man-week.

Waste solutions. The only source of uranium loss during ion exchange was that contained in acetate elution solutions. As noted above, this waste averaged <0.2% of the uranium in the feed. Later in the program, all ion exchange process solutions, including the acetate solution, were recycled to solvent extraction without deleterious effects.

Resin stability. The schedule for resin replacement was based on two main considerations: (1) the apparent reduction in effectiveness of removing radium as determined by the product gamma decay curve, and (2) a gradual increase in pressure drop across the column during the loadings and elutions that were observed with each successive run. When the pressure drop approached 100 psi with the flow rate at 50% of that normally used with new resin, the column was replaced. This increased pressure drop was believed to be the result of a breakdown in the resin cross-linkage due to irradiation and/or chemical attack. Breakdown of the cross-linkage would cause the resin structure to lose some of its rigidity and swell beyond its normal expanded size.

5. CONVERSION OPERATIONS

The $^{233}UO_2$ conversion process is described in detail in the manufacturing process outline[6] and shown schematically in Fig. 5.1. Steps in the process include precipitating the uranium from the aqueous feed using ammonia gas; separating the precipitate from mother liquor and washing the precipitate using a centrifuge; drying the precipitate in a microwave oven; granulating the dried powder; calcining the powder in a hydrogen atmosphere at 650°C; stabilizing the dioxide powder by contacting with argon followed

---

*It should be noted that the weekly personnel exposures included doses from other operations (especially binary scrap dissolver charging; see Sect. 7.2).

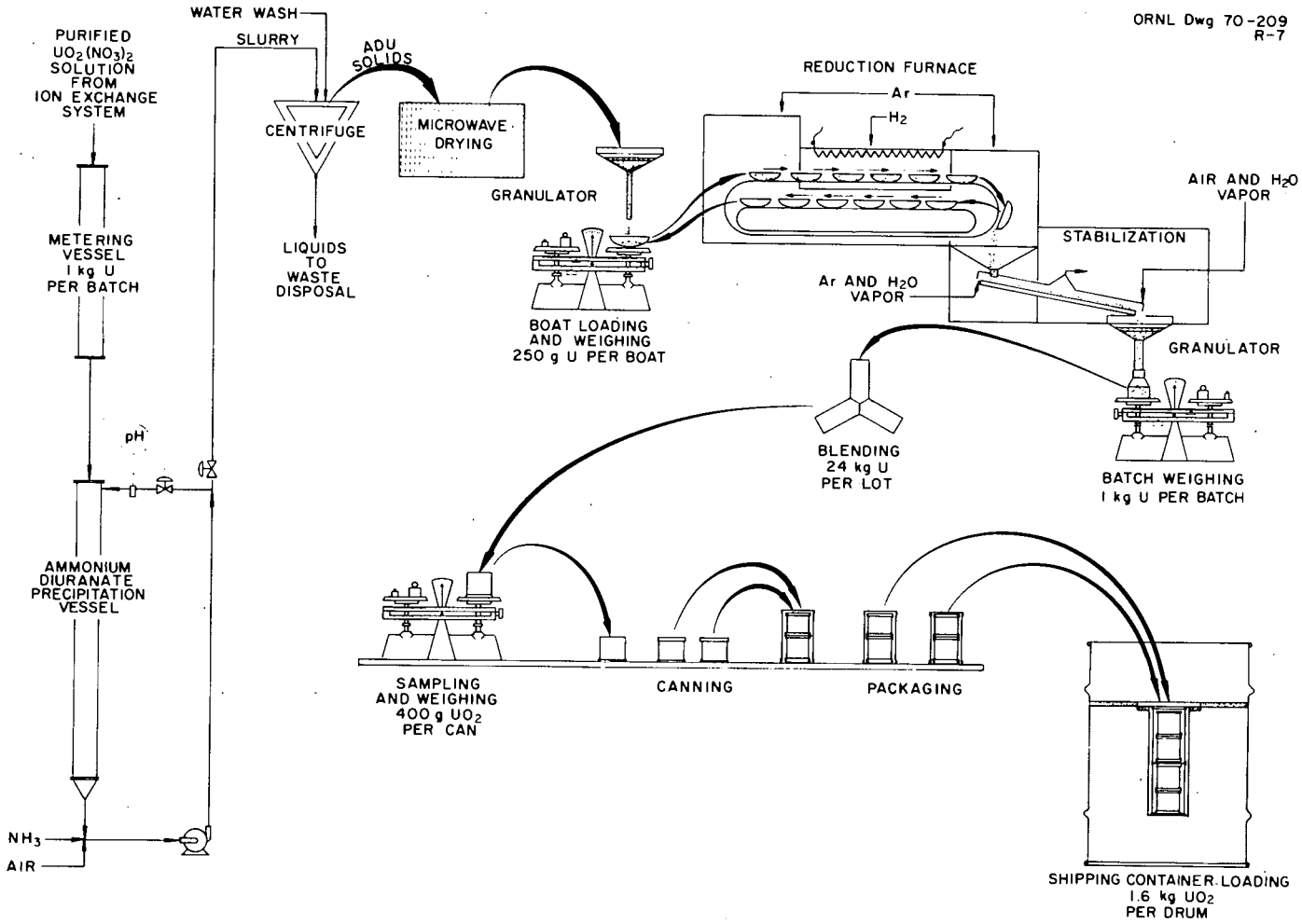

Fig. 5.1. UO_2 preparation.

by air, both saturated with water, at ambient temperature; regranulating the resulting powder; blending and packaging; and preparing for shipment or storage.

All the process equipment, except the furnace, is contained in stainless steel alpha enclosures (Fig. 5.2) which ventilate into an alpha ventilation system. The furnace is a multizone unit designed for controlled-atmosphere operation; the midzone operates with hydrogen, while the end boxes enclosing the entrance and exit of the furnace are designed for operation with argon.

During facility startup and shakedown, which began in May 1972 and continued for about 1 year, deficiencies in the process were detected and improvements in the operation of the system were made. Preproduction runs, made throughout the last half of this period, resulted in minor revisions to the process outline and equipment.

Eighty-nine production runs were made from May 1973 through May 1976. Only one complete lot of powder (OX-179) was rejected for failure to meet specifications; however, two and one-half lots meeting all specifications (OX-145, -147, and one-half of -152) were recycled at the request of BAPL. Total quantities shipped during this period amounted to 21 kg of preproduction UO_2 and 1747 kg of production UO_2.

5.1 Receipt of Uranyl Nitrate Feed Solution

5.1.1 Operating conditions

Uranyl nitrate solution meeting all specifications was transferred, in batches of 1000 to 1100 g of uranium, from the ion exchange system product storage tank to the calibrated UNH metering vessel. The transfer was performed by evacuating the latter vessel to a pressure of -24 in. Hg and opening valves in the piping connecting the two vessels. The level of liquid in the metering vessel, which was fabricated of glass, was determined simply by visual observation. A quantity greater than the required amount of solution was transferred for the first batch to compensate for the holdup in the metering and precipitation vessels. This ensured batches of uniform size during the week's operation.

The maximum-size lot produced contained 24 batches ($\sim$26 kg of uranium).

ORNL Dwg 78-20398

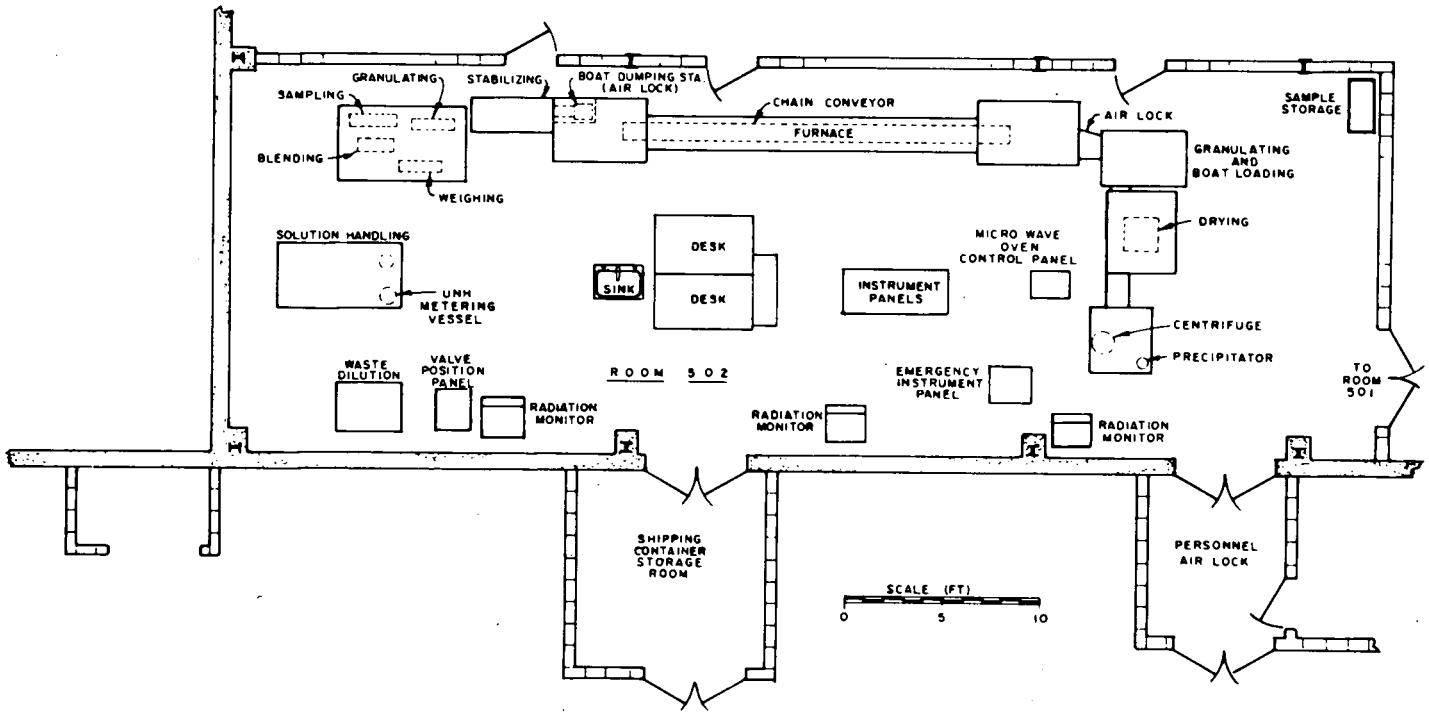

Fig. 5.2. UO_2 conversion equipment plan in Bldg. 3019.

After the batch of solution contained in the metering vessel had been received and measured, the desired volume was transferred to the calibrated, glass precipitation vessel in Enclosure B by applying air pressure to the UNH metering vessel, opening valves in the connecting transfer lines, and visually observing the rise in liquid level in the precipitation vessel. The batch size was previously determined from the volume and uranium concentration of the ion exchange product and the lot size specified by BAPL for a given week.

5.2 Precipitation and Centrifugation

5.2.1 Operating conditions

The uranyl nitrate solution, collected in the precipitation vessel (Fig. 5.1), contained 115 ± 15 g of uranium per liter and had a HNO_3 concentration of 0.1 to 0.4 M. During precipitation, the solution was circulated from the bottom of the vessel, through a pH cell, and returned to the top of the vessel at the rate of 45 ± 15 liters/min.

Argon was bled into the circulating solution downstream of the pH meter at the rate of 5 std liters/min to minimize plugging in the line. Ammonia gas was then introduced into the line and the argon flow stopped. The ammonia flow was regulated to 11.2 ± 2.2 std liters/min, which required no external cooling to maintain the temperature of the solution between 20 and 60°C during precipitation. Progress of the precipitation was followed by observing the pH meter reading. At a pH of 7.5, argon was again bled into the ammonia stream at the rate of 5 std liters/min. When the pH of the solution reached 8.3, the flow of ammonia was halted automatically. Argon flow was continued during a 5-min digestion period to purge the piping of ammonia. This served to prevent plugging when fresh uranyl nitrate solution passed the mouth of the ammonia line at the beginning of precipitation of the subsequent batch.

After the centrifuge had been started and had attained a speed of 3300 rpm, the supernate collection vessel in Enclosure A was evacuated and a small flow of slurry was diverted to the bowl containing a Teflon liner (Fig. 5.3). The flow of slurry was regulated in such a way that no visible precipitate overflowed from the top of the liner into the

ORNL Dwg 78-20399R

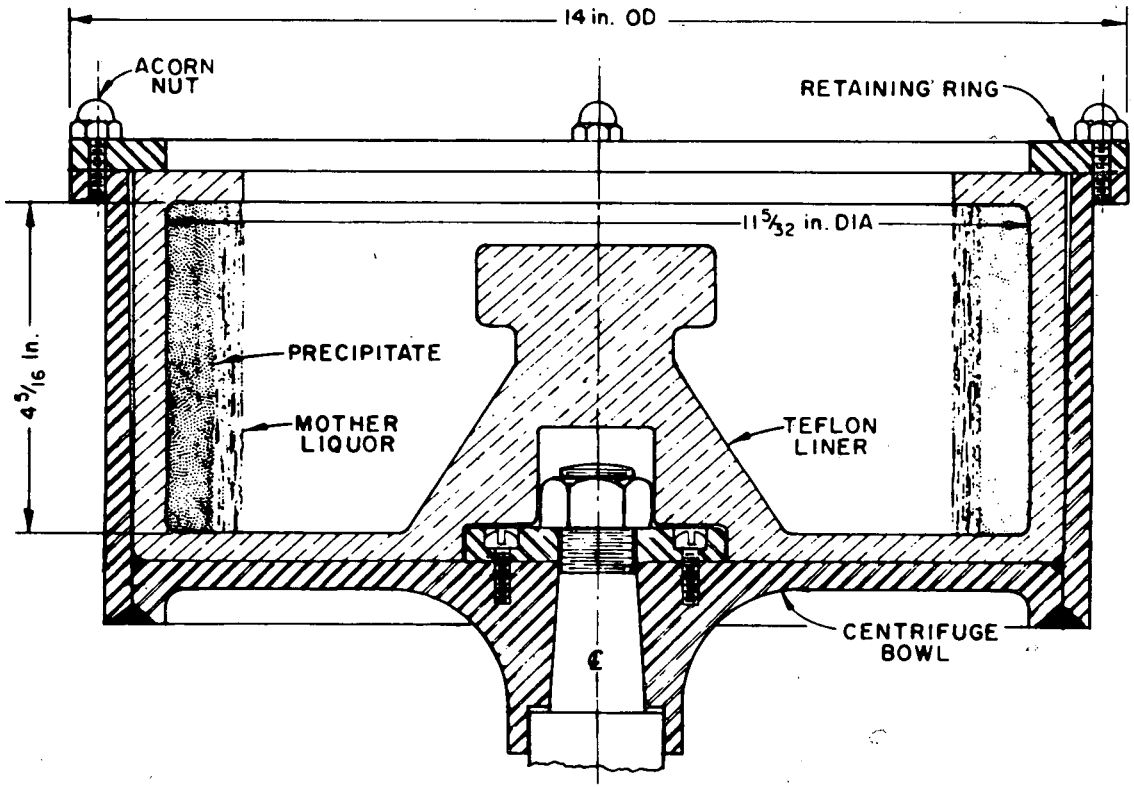

Fig. 5.3. Collection of ammonium diuranate in the Teflon liner in the centrifuge.

waste supernate collection vessel. When only ∿0.5 liter of slurry remained in the precipitation vessel, rinsing of the vessel and, subsequently, the precipitate in the Teflon liner was initiated.

In the rinsing procedure, three 2-liter (followed by one 4-liter) batches of demineralized water were passed through the precipitation vessel to the Teflon liner in the centrifuge and overflowed to the centrifuge supernate vessel. When the precipitation vessel became empty, the circulating pump and centrifuge motor were stopped. The solution in the supernate collection vessel was then transferred to the waste neutralization vessel (by evacuating the latter), and the former vessel was ready for the next batch. After two batches of centrifuge supernate had been collected in the waste neutralization vessel, the solution was sparged and sampled to determine uranium content. If the uranium concentration was <0.05 g/liter, the solution was sent to the ORNL hot chemical waste storage system, along with $^{238}UO_2(NO_3)_2$ solution at a $^{238}U/^{233}U$ ratio of 100/1. If the uranium concentration was >0.05 g per liter, the solution was returned to the solvent extraction facility via the waste recovery vessel for uranium recovery.

When the centrifuge was stationary, the holddown ring clamp and cover were removed from the centrifuge bowl; then the Teflon liner, containing the ADU cake plus about 1.2 liters of water, was lifted out of the bowl. The liner was placed on an inclined elevator and transported to the entrance to the microwave oven in Enclosure C.

5.2.2 Problems encountered and methods of resolution

During the period of equipment checkout and operating procedure standardization, the ammonia charging pipeline joined the circulating line at the bottom of the precipitation vessel, upstream of the circulation pump. Thus, when ammonia was admitted to the system, it came into contact with fresh uranyl nitrate solution while still in the branch line and the resulting precipitate plugged the line. This problem was corrected by joining the ammonia pipeline to the section of circulating line near the top of the precipitation vessel and by purging the gas line with argon before admitting ammonia.

The original procedure did not incorporate the precipitate washing steps. Consequently, the ADU cake sent to the microwave oven contained ∿1.2 liters of ∿1 M NH_4NO_3 solution. Near the end of the air-drying cycle in the microwave oven, the NH_4NO_3 would ignite and the cake would glow, resulting in damage to the powder and Teflon. Fluoride from the decomposition of Teflon contaminated the powder, making it unacceptable as final product. To correct this problem, the ADU cake was rinsed with water until the solution above the precipitate contained ∿0.1% or less of the NH_4NO_3 held originally. The cake was not reslurried by rinsing so that the solution beneath the surface of the cake was not removed completely; however, the danger of burning of NH_4NO_3 was reduced considerably since its concentration was reduced from 21% to 0.6%.

5.3 Uranate Drying and Granulation

5.3.1 Description of equipment

The microwave generating system (Reeve Electronics, Inc.) operated at a power level between 0.7 and 2.5 kW. The microwave energy was generated by a magnetron tube coupled to a waveguide launching section that was mounted on top of the control cabinet and connected to the approximate center of the drying oven.

The interior dimensions of the stainless steel oven were 30 x 30 x 30 in. and included a rising door, 16 in. high by 22 in. wide, in the front wall. A turntable, connected to a motor by a shaft through the bottom, was mounted inside the oven to hold the ADU in the Teflon liner and ensure uniform exposure to the microwave energy. (Teflon is transparent to microwave energy.)

The outside walls and top of the oven were heated by strip heaters to prevent internal condensation of moisture during operation.

An air stream that entered through a port near the bottom of the oven and exited through a port at the top swept the moisture out of the oven. This hot, saturated air was passed through a condenser and a high-efficiency filter before being exhausted into the alpha enclosure ventilation system.

Two stainless steel granulators, manufactured by Erweka-Apparatevau-GMbH, were installed in the system for the purpose of reducing the particle sizes of the dried ADU and calcined UO_2. The screen ends fit into slotted rods, which were rotated to anchor the screen in position. The edges of the screen were sealed to prevent the leakage of powder by pressing against a shoulder in the housing. An agitating four-bladed paddle forced the powder through the screen. Speed of the paddle was controlled by regulating the current to the drive motor by a rheostat.

5.3.2 Operating conditions

The Teflon liner, containing wet ADU, was transported via the inclined elevator to the turntable in the microwave oven. (The turntable was tilted at a angle of 20° from horizontal and rotated at 10 rpm by a motor that was located under the oven and connected by a shaft passing through the bottom of the oven.) The turntable motor was started and the rotation observed to ensure that the liner did not slide out of position. After the oven door had been closed, the flow of air through the oven was adjusted to 5 cfm and the flow of coolant to the oven off-gas condenser was started. Then the temperature controls for the electric heating blankets on the top and sides of the oven were adjusted so that they were 200 to 240°F, the cooling water to the magnetron tube was turned on, and the condensate pot in the oven off-gas line was observed to ensure that it was empty. When these conditions were found to be normal, power to the microwave oven was turned on and the forward power was set at 2.0 ± 0.25 kW, where it was held for 45 ± 15 min while adjustments were made within the range, depending on batch size. Drying was completed at a forward power of 1.0 ± 0.2 kW for 45 ± 25 min, again with adjustments being made within the lower part of the range, depending on the appearance of the powder.

The Teflon liner containing dried ADU was removed from the oven and visually inspected for dryness. If still wet, the ADU was returned to the oven and drying continued; if acceptable, it was transferred by elevator to the top of the granulation box in Enclosure D.

Here the Teflon liner was emptied by anchoring it in a holder and turning it upside down via a crank (connected by a sprocket chain to the

holder) located near the granulator controls. The granulator blades were actuated, and the holder was rotated and tipped until powder poured down the chute. Powder passing through the 35-mesh stainless steel screen was forced to the exit end of the draw-off pipe by a vibrator and collected in Inconel furnace boats (Fig. 5.4). The powder from a 1-kg uranium batch was distributed evenly across four boats. The gross weight of each boat was determined, and the powder surface was leveled to ensure that the depth was ≤3/4 in. The four loaded boats were placed in a transfer tube which was subsequently sealed, purged with argon (to displace the air), and delivered to the furnace entrance (Enclosure E) as required.

After each lot of dried ADU had been removed from the microwave oven, the door was closed and the condenser coolant flow stopped. The outside surface heaters were then turned on, and the flow of warm air through the oven was allowed to continue for 1 hr in order to dry the off-gas filter located downstream of the condenser and condensate pot.

The condensate in the pot was transferred to the washdown vessel, measured and sampled for uranium content, and disposed of accordingly.

The emptied Teflon liner was returned to the centrifuge enclosure for reuse.

5.3.3 Problems encountered and methods of resolution

During the LWBR Demonstration Program, 1.1% of the batches of ADU (18 out of 1642) ignited during drying in the microwave oven; only 0.6% burned during the drying of the last 96% of the batches (Fig. 5.5). Since the frequency was acceptably low, no extensive modifications to the process were necessary. Aside from rinsing the wet precipitate, only two changes were made: (1) installing an audible alarm that activated when the oven turntable stopped rotating during the drying cycle, and (2) altering the drying times in accordance with batch sizes.

As the lot sizes were increased, the tendency of the oven off-gas filter to plug increased as a result of moisture which collected on the filter medium. This problem was eliminated by purging the externally heated, empty oven for 1 hr (with the condenser coolant turned off) after completion of each drying cycle.

ORNL Dwg 78-20400R

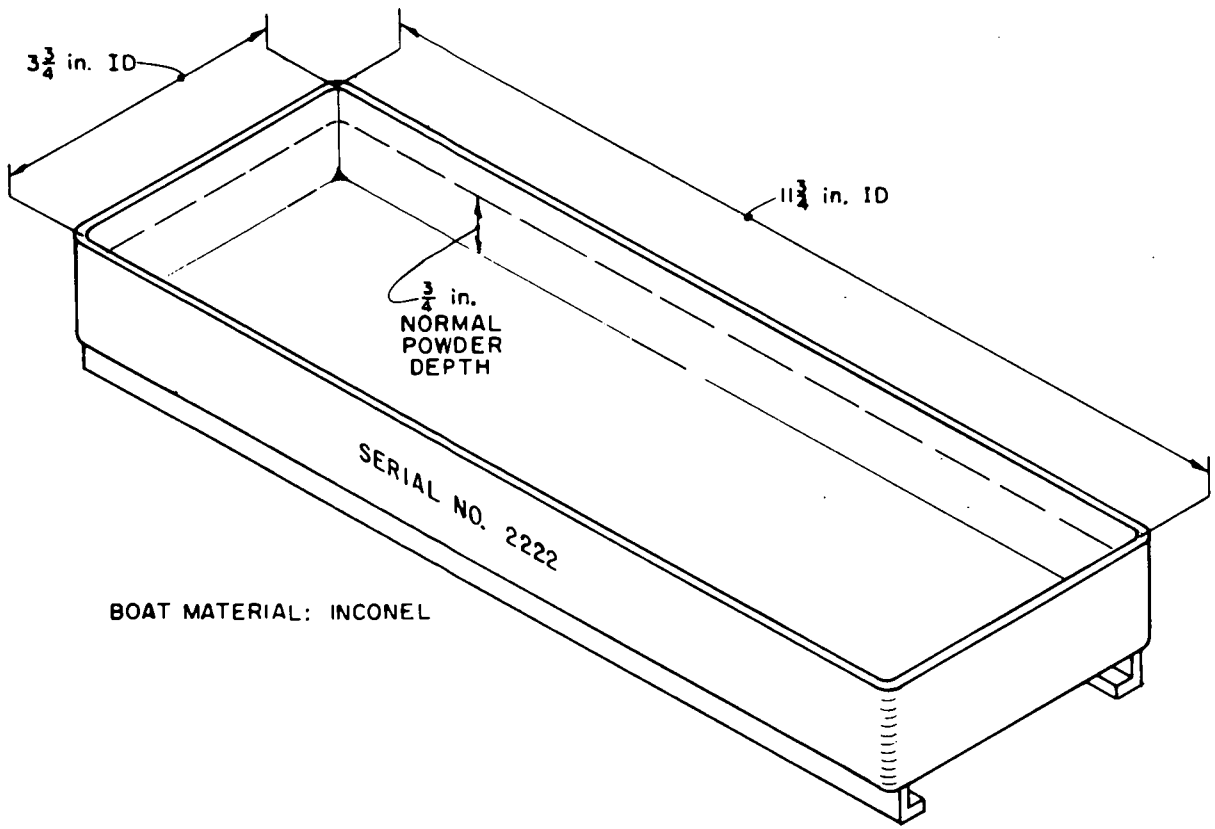

Fig. 5.4. Furnace boat.

ORNL Dwg 78-20401

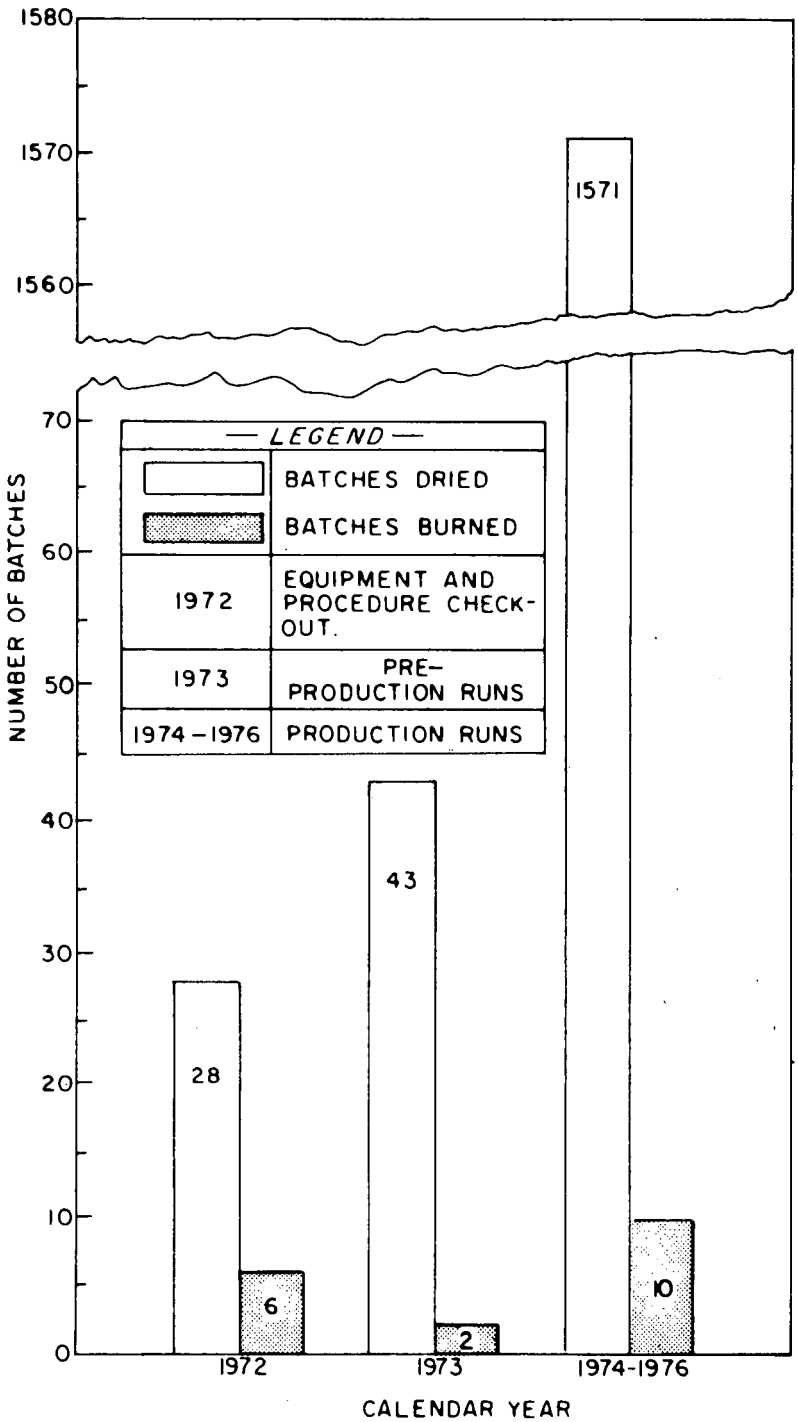

Fig. 5.5 Batches of ammonium diuranate passed through microwave oven.

It was important to examine the dried powder closely; too much residual moisture would cause the granulator screen to "blind" and thus make granulation impossible. In such a situation, the granulator screen had to be replaced, and the excess powder collected and returned to the drying oven, redried, and regranulated. If there was any indication of contamination during reprocessing, the batch was rejected and recycled to the dissolution and purification system. At the other extreme, overdrying of the powder resulted in excessive "dusting," which caused the off-gas filter for the enclosure to plug rapidly.

Two Teflon liners were used, collecting alternate batches of precipitate. This technique allowed each liner to cool an extra 4 hr before reuse, thus eliminating the difficulties associated with positioning a warm liner on the centrifuge spindle.

The 35-mesh granulator screen had a life expectancy of about four lots. Failure was attributed to rubbing of the granulator blades on the screen; occasionally tears developed if the screen was stretched too tightly against the blades. Granulated powder containing lumps indicated a damaged screen or an excessive feed rate to the granulator. In the latter case, the excess bypassed the screen by flowing over the screen-positioning rods at the top of the granulator, entered the chute to the vibrating pipe, and collected in the furnace boats. Whenever lumps appeared in a collection boat, the screen was examined, replaced if necessary, and the powder regranulated.

5.4 Calcination-Reduction

5.4.1 Description of equipment

Calcination and reduction of the ADU were conducted in a multizone, controlled-atmosphere furnace featuring a hydrogen region in the midsection bounded by argon regions at the ends. The furnace was manufactured by BTU Engineering Corporation. The total connected electrical load was 30 kW (440 V, 60 Hz, three-phase), and 12 controlled heated zones were available to maintain a normal temperature over the range of 200 to 700°C. Each heated zone was 12 or 18 in. long (Fig. 5.6). Heat barriers separated the first and second, the fifth and sixth, the seventh

ORNL Dwg 78-20402

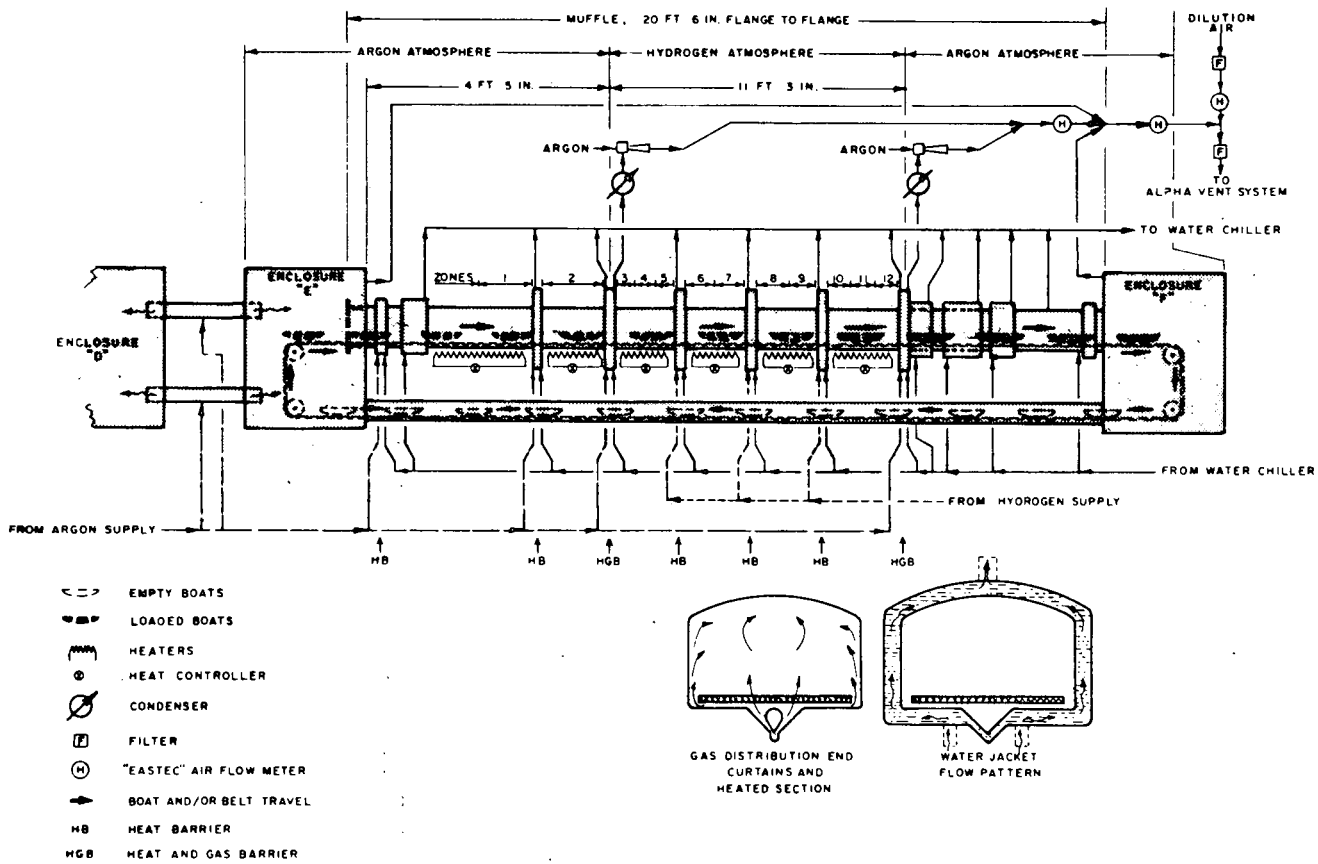

Fig. 5.6. Calcination-reduction furnace.

and eighth, and the ninth and tenth zones. Heat and gas barriers separated the second and third zones and the twelfth zone and the cooling section; a hydrogen atmosphere was maintained between these barriers, with an argon atmosphere at each end of the tube.

Hydrogen was used as the reducing gas, while argon was used as the purge and isolation gas. The hydrogen-containing off-gas was diluted with argon from the furnace and boxes, exhaust from the heat- and gas-barrier, and finally diluted to <1% hydrogen concentration with air by an air jet connected to the off-gas line. Automatic hydrogen shutoff protection was provided in the event that hydrogen or argon manifold pressures dropped below a preset point or that a loss of power was experienced. Emergency hydrogen shutoff switches were provided for manual operation when hydrogen concentrated in the end boxes or air leaks developed.

The muffle was 4.5 in. wide with a 4.5-in. clearance above a movable, endless Incoloy chain belt passing along the floor. The muffle, 20.5 ft long, was connected to an inlet (E) and exit (F) enclosure. A single gas distribution tube was mounted below the muffle.

The woven Incoloy chain belt was designed to carry at least 24 boats, each having a gross weight of 3.5 kg when filled. The normal speed was 1 ft (the length of one boat) per hour, but could be varied from 0.5 to 3.0 ft per hour. Each boat measured 4 in. wide x 12 in. long x 1.5 in. deep.

The zone temperature was regulated by solid-state controllers and trim potentiometers and protected by Protektall overheat-protection controllers.

A separate, rubberized-cloth conveyor belt was used to return empty boats from the outlet end of the muffle (Enclosure F) to the inlet end (Enclosure E) for reuse. This belt, which was located inside the furnace housing but outside the muffle, traveled at the speed of 5 fpm. The empty boats were transferred from Enclosure E to the ADU granulation Enclosure (D) through a transfer tube containing argon.

5.4.2 Operating conditions

At the beginning of each week of operation (production of one lot), the inlet and outlet end boxes (Enclosures E and F, respectively) of the reduction furnace were purged with argon at the rate of 50 std ft^3/hr to remove air or moisture. At the same time, the temperature controllers for the various furnace zones were set at predetermined values. Argon flows to the muffle were then initiated by setting the flow rotameters at 1 scfm; the belt drive was actuated, and the furnace electric heaters were turned on.

After the furnace temperatures had reached the desired levels, hydrogen was introduced at a total flow of ≥2.1 liters/min into the three ports in the reduction zone of the muffle. Gas flows and pressures were set so that hydrogen was kept from the end boxes and argon did not dilute the hydrogen in the furnace; these were controlled at the heat and gas barriers located at the front and rear of the hydrogen zone.

The temperature profile throughout the furnace was checked, prior to introduction of the ADU, by using a Chromel-Alumel thermocouple anchored to an empty boat (Fig. 5.7). The thermocouple lead wire was wound on a reel located beyond the end of the moving belt. As the special boat passed through the furnace resting on the conveyor, the lead wire unreeled and trailed behind the boat. Normally, the desired temperature profile was maintained by adjusting the heaters based on results of temperature measurements made as the thermocouple progressed through the furnace. A typical temperature profile is shown in Fig. 5.8.

The ADU was loaded into 1-ft-long boats, which were placed end to end on the conveyor belt following the thermocouple assembly. At a belt speed of 1 ft/hr, therefore, one batch (nominally 1 kg of uranium) entered the furnace every 4 hr, and the maximum production rate of the line was six batches per day.

Each loaded boat entered the furnace in an argon atmosphere and was heated to 625 ± 25°C (in ∿3 hr) before passing through the first heat and gas barrier into a hydrogen atmosphere. The temperature maintained at the argon barrier was based on the phosphorus content of the feed; it was set near 650°C if the phosphorus content was high and near 600°C if the content was low (see Sect. 5.4.3).

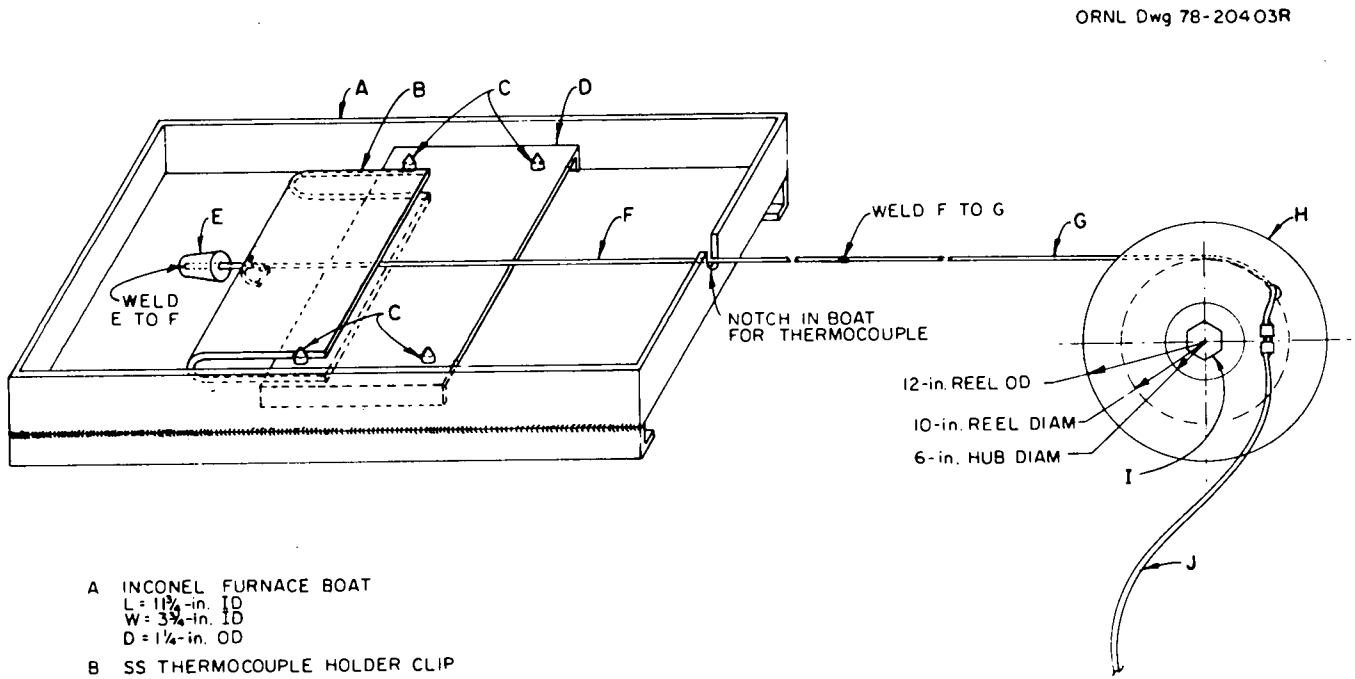

A INCONEL FURNACE BOAT
L = 11¾-in. ID
W = 3¾-in. ID
D = 1¼-in. OD

B SS THERMOCOUPLE HOLDER CLIP

C THERMOCOUPLE HOLDER CLIP GUIDE

D THERMOCOUPLE CLIP HOLDER

E SS CONE

F SS WIRE, 18 in. LONG

G SS CLAD CHROMEL-ALUMEL THERMOCOUPLE, 27 ft LONG

H THERMOCOUPLE TAKE-UP REEL

I REEL TENSION ADJUSTMENT

J THERMOCOUPLE PIGTAIL

Fig. 5.7. Furnace temperature boat with thermocouple and take-up reel attached.

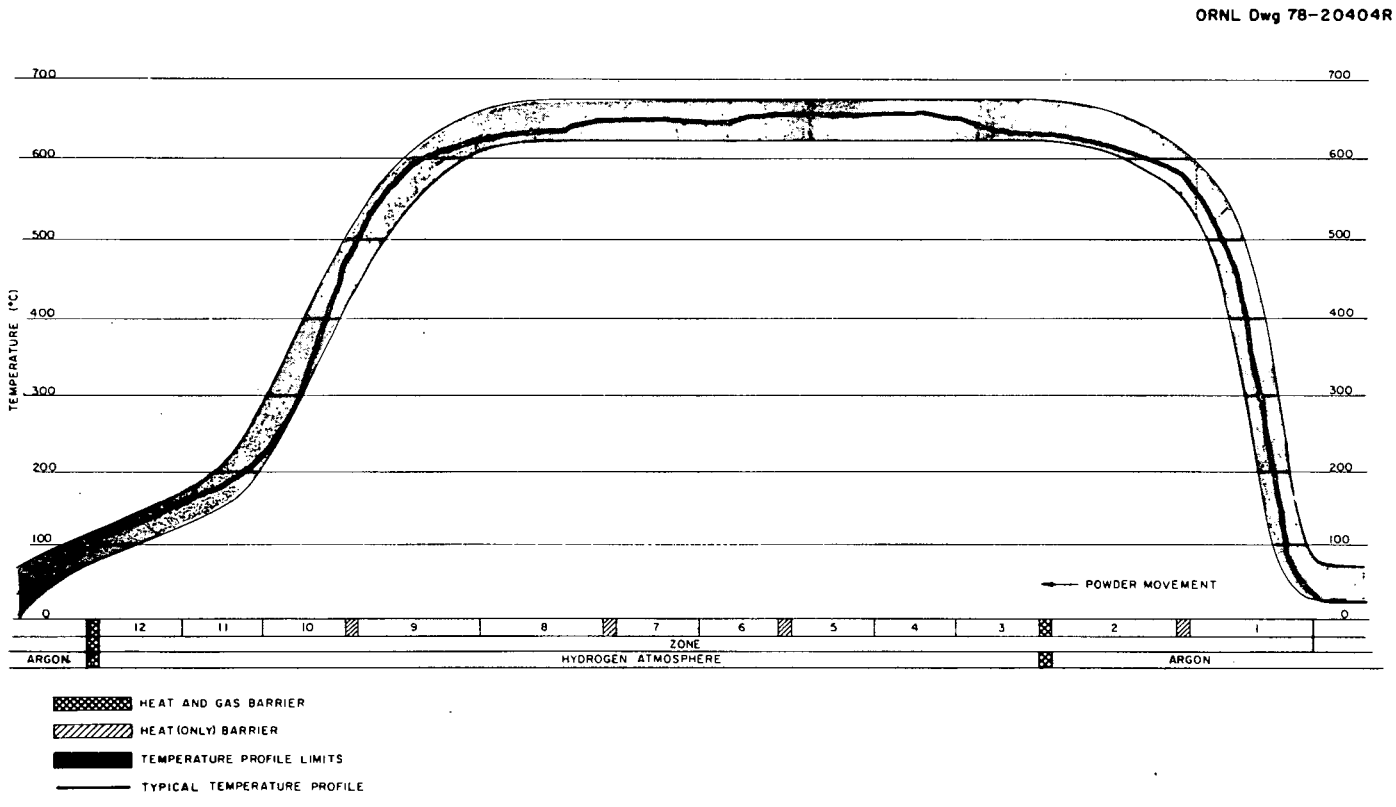

Fig. 5.8. Temperature and atmosphere profile for the reduction furnace.

While in the hydrogen atmosphere, the powder was heated to 650 ± 25°C for 6 ± 0.5 hr and then cooled to 100 ± 25°C. Following this treatment, it passed through the second heat and gas barrier into an argon atmosphere, where it was allowed to cool to ambient temperature before leaving the furnace.

5.4.3 Problems encountered and methods of resolution

Early in the program, the lead wire for the profile thermocouple often broke as it unwound from the reel. Very little force was needed to rotate the reel and, since the 1/8-in.-diam stainless steel sheath was under stress when wound onto the reel, the lead wire would tend to unwind faster than it was pulled through the furnace. When the slack was taken up, the wire was pulled tight against the small-diameter hub of the reel, where it was subjected to a continuous rubbing action that eventually caused a break. This problem was eliminated by installing a tension adjusting nut on the reel.

Occasionally in initial runs, boats containing powder would form a "log jam" in the furnace because of misalignment. Also, such jams occurred because the venturi tubes (off-gas) were originally set too low into the muffle at the heat and gas barriers. These incidents caused the belt to stop and the belt shear pin to break. As a result, two batches (eight boats) of powder were rejected because of excessive time in the hydrogen zone. The first problem was corrected by installing guide boxes on both sides of the belt at the furnace entrance, ensuring alignment of the boats, while the second problem was corrected by raising the venturi tubes from 1/8 in. to 1/4 in. above the top edge of the boats.

We also experienced an occasional loss of hydrogen. Three batches (12 boats) of powder were rejected because they were not kept in a hydrogen atmosphere for the required length of time. This problem was caused by a sudden loss of power, pressure surges in end boxes, accidental pressing of emergency shutdown buttons, and high hydrogen concentrations in the end boxes. Loss of power occurred during electrical storms or other power surges. Pressure surges in the end boxes were caused by operating personnel who occasionally inserted their hands and arms in the gloves too rapidly when preparing to handle boats of powder; this problem was

corrected by installing a time-delay switch in the hydrogen shutoff system. Emergency shutdown buttons for the hydrogen supply were placed on the north and south sides of Enclosures E and F at points less susceptible to inadvertent actuation. Hydrogen entered the end boxes when the piping to the exhaust venturis became plugged with powder. This type of situation, which was usually encountered near the end of a run, was normally corrected by vibrating the off-gas line, reducing the flow of hydrogen, and adding empty boats. Hydrogen flow could be reduced as much as 67% and still satisfy the process requirements, making this the preferred method. During the last two calcination batches each week, the furnace was kept full of empty boats until the last loaded boat was out of the hydrogen zone and the hydrogen flow could be terminated; in this way, the same gas flow pattern was maintained throughout the run and the hydrogen concentration remained low in the end boxes.

The furnace temperature profile was set to produce UO_2 with a surface area of $6\ ^{+3}_{-2}\ m^2/g$. Leitnaker's experiments showed that the temperature at which ADU entered the hydrogen zone affected the surface area;[7] a high temperature produced a low-surface-area powder. At approximately the midpoint of our production, we started using uranyl nitrate feed which contained a higher concentration of phosphorus ($\sim$400 ppm UO_2) and found that it produced a high-surface-area powder. To reduce the surface area of this powder to an acceptable value, we raised the temperature at which the powder entered the hydrogen zone from 625°C to 635°C. When the phosphorus content was <100 parts per million parts UO_2, the entrance temperature was set at about 600°C to increase the surface area to an acceptable value. The effect of phosphorus content on surface area at a given temperature is shown in Fig. 5.9.

5.5 Stabilization

5.5.1 Operating conditions

The UO_2 leaving the furnace is pyrophoric and, on exposure to air, oxidizes rapidly to U_3O_8, emitting considerable heat. To prevent this oxidation, the UO_2 powder was stabilized by contact with moist argon followed by exposure to moist air in the stabilizer.

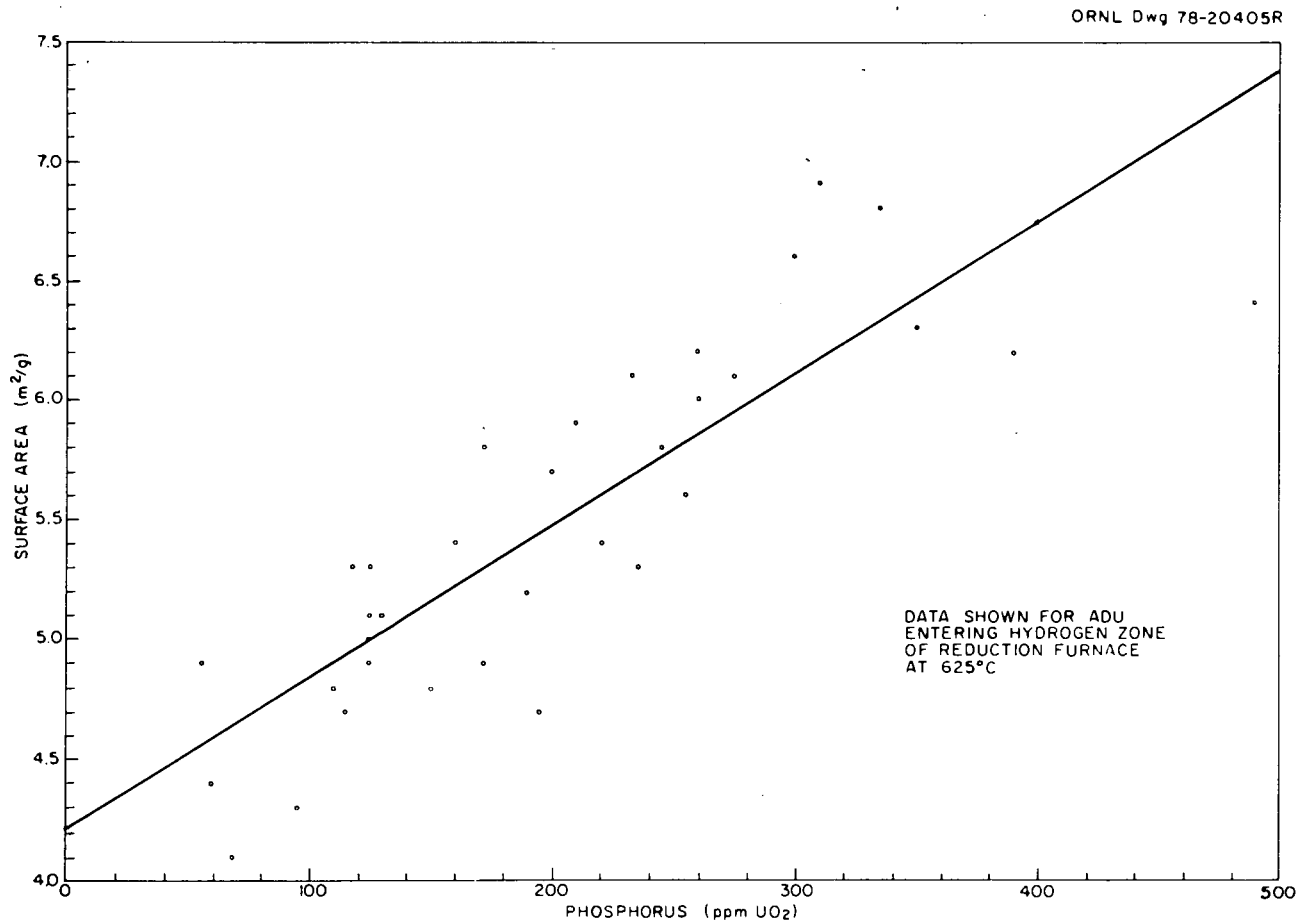

Fig. 5.9. Effect of phosphorus content on surface area.

Boats of UO_2 leaving the furnace were emptied in a second enclosure inside Enclosure F to confine the dust produced. The powder fell through a chute to a vibrating, cascaded stabilizer that was 7 ft long (Fig. 5.10). It then flowed down the inclined (about 5° from the horizontal) vibrating tray* in a thin (1/8-in.) layer to the outlet end, where it was collected in a can that was clamped to the plastic chute. This can was removed from the system when the powder from four boats (one batch) had been accumulated. Powder passed down the upper half of the stabilizer in contact with a concurrent stream of argon saturated with water. During the last half of the stabilization, it contacted a countercurrent stream of air saturated with water. The two gas streams were exhausted from the midpoint of the stabilizer housing through an assault mask canister filter into the outer stabilizer enclosure, which exhausted into the alpha enclosure ventilation system.

"Stable" powder was produced throughout the entire program. Fifty-five percent of the production lots shipped had an oxygen-to-metal (O/M) mole ratio of 2.04. The lowest O/M ratio obtained was 2.03; the highest was 2.07 (Fig. 5.11). The BAPL specification required that this ratio be <2.18.

5.5.2 Problems encountered and methods of resolution

In the first weeks of operation, the powder product collection can was anchored rigidly to the outlet end of the stabilizer. Its heavy weight adversely affected the vibration characteristics of the stabilizer and also presented the risk of possibly causing the stabilizer bed to crack prematurely. This problem was eliminated by placing the can on the enclosure floor and joining it to the stabilizer by a flexible plastic sleeve.

As operations continued, slight leaks developed at the seal between the glass cover and the aluminum frame of the stabilizer. The small quantity of escaping powder was occasionally removed with a vacuum cleaner and recycled through the recovery system. No attempt to further correct this problem was necessary.

---

*The tray was a part of the inner enclosure.

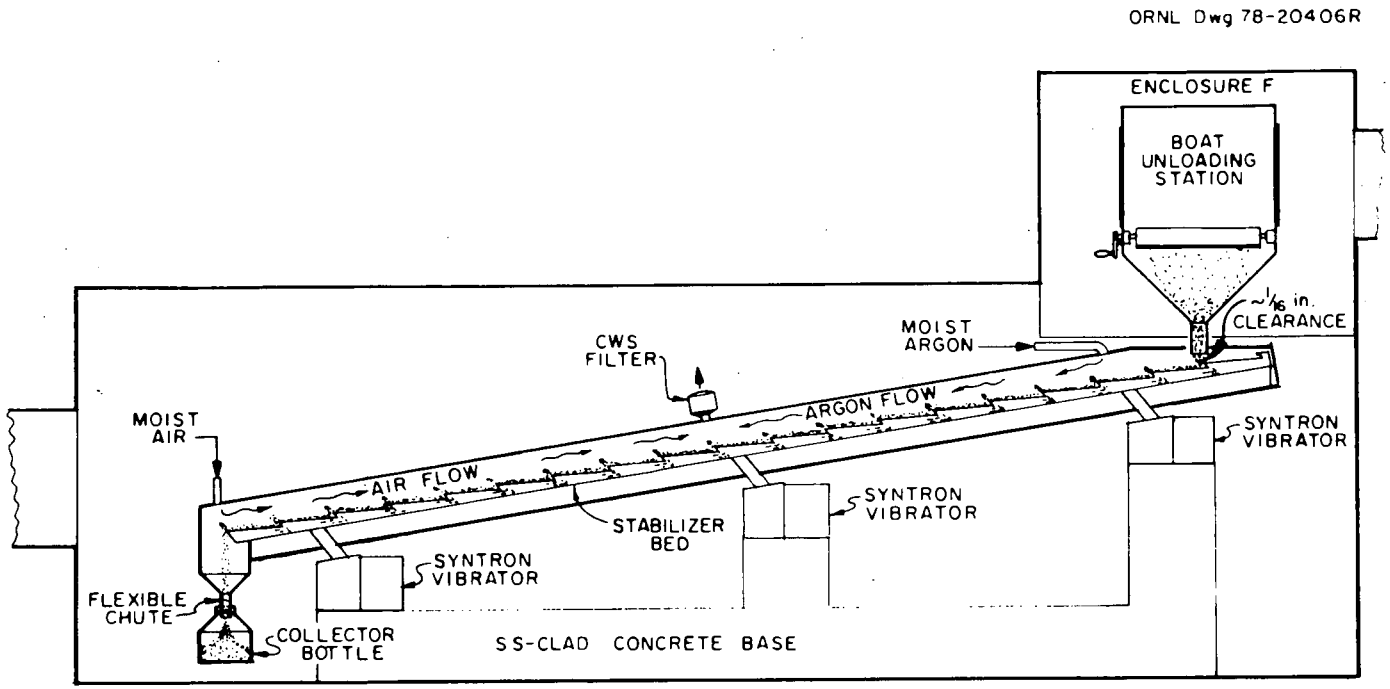

Fig. 5.10. UO_2 powder stabilizer.

ORNL Dwg 78-20407

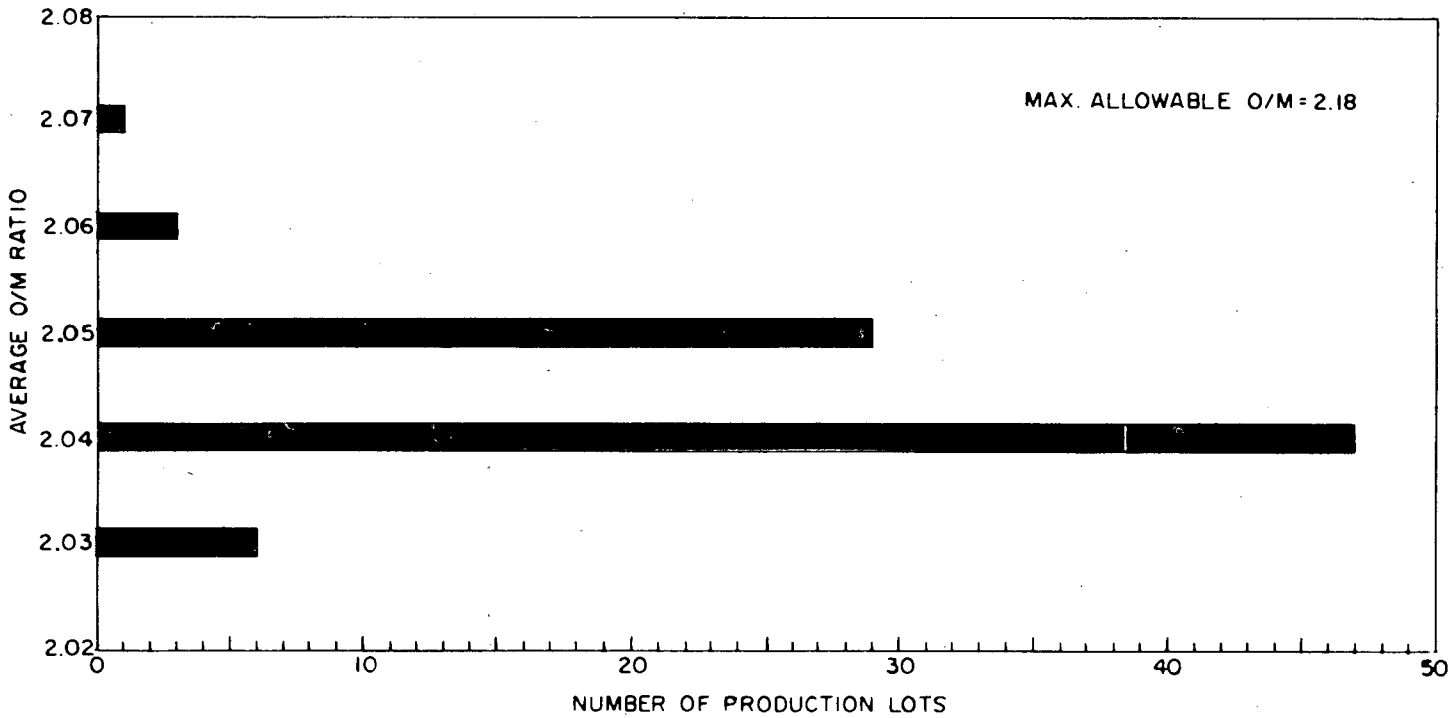

Fig. 5.11. Oxygen-to-metal mole ratio of UO_2 in production lots.

5.6 UO_2 Granulation and Blending

5.6.1 Description of equipment

As analyses of batches of granulated, stabilized UO_2 powder were found to meet the specifications, they were released by the QA Group and transferred to the blender. The V-blender was a commercial (Patterson-Kelley Company), double-shell type fabricated of stainless steel with the 2-in. void filled with lead. The blender had a single port housing a 3-in. stainless steel ball valve, which served for both charging and discharging. The bulk volume of the blender was 0.87 ft^3 (24.6 liters).

The rotating axis passed through both legs of the V such that the port rotated on a horizontal axis. The system was carefully balanced so that the blender could be rotated by hand. In operation, the blender was rotated at 24 rpm by a small electric motor.

5.6.2 Operating conditions

The stabilized UO_2 powder was passed through a 100-mesh screen in a granulator of the same design as that used for dried ADU (see description in Sect. 5.3.1). The granulator screen could be inspected readily after the passage of each batch of powder. If the screen was found to be torn, it was replaced and the powder regranulated.

The granulated powder from four boats was collected in a can, which was subsequently weighed; the weight was then compared with that of the original uranate in the batch. The UO_2/ADU ratio varied from 0.75 to 0.85, depending on the dryness of the uranate, spillage during handling, and holdup in the UO_2 granulator.

The first, fourth, and each fourth batch thereafter (except the final four batches) were sampled for determination of surface area, O/M ratio, and concentration of uranium. When analysis showed a sampled batch to be acceptable, that batch plus those preceding it were transferred to the blender. The exception was that the final four batches could be charged to the blender when the last of the series of sampled batches proved to be acceptable. Granulated and weighed batches were stored in a rack by the top of the blender until the analytical results

became available. On receipt of unacceptable values, the rejected batch was resampled or returned for recycle if any irregularity was suspected.

When all acceptable batches of the lot had been accumulated in the blender, the charging valve was closed; the blender then remained idle until about 4 hr before packaging was to begin. At that time, the blender was rotated once slowly by hand to ensure that no object was in its path. When ready, the blender was started and allowed to rotate at 25 ± 2 rpm for 1 hr. Finally, the motor was stopped, and the blender was inverted for product removal.

5.6.3 Problems encountered and methods of resolution

Early in the program, we experienced an average of one granulator screen failure per lot. Failure was caused by excessive wear, which was most frequently attributed to the extremely tight fit of the screen against the paddle. To reduce the frequency of failure, the supervisor was required to inspect the screen after each batch and to replace it if damage was evident. As a preventive measure, the screen was routinely replaced at the midpoint and at the end of each run, regardless of its condition.

Near the end of the program, the top part of the plastic granulator housing became brittle, resulting in a 3/4-in. hole. Since the hole was located near the top of the granulator and very little dusting occurred during granulation of a batch, the housing was not patched or replaced.

5.7 Product Removal and Distribution

5.7.1 Operating conditions

After the powder from one lot had been thoroughly mixed, the blender was positioned manually so that the charge-discharge valve pointed down. The horizontal draw-off pipe was sealed to the blender by applying pneumatic pressure to a flexible connection. This pipe was vibrated by a Syntron vibrator to induce the flow of powder; any material adhering to the walls of the blender was dislodged by a pneumatically powered ball vibrator.

With the ball valve open and the above two vibrators activated, powder flowed freely to previously weighed and labeled stainless steel primary cans. Each can and its cover rested on the weighing pans of an Ainsworth electronic balance during loading; thus the total weight was displayed on a readout panel. The transfer of powder was automatically stopped by shutting off the vibrator on the draw-off pipe when 400 ± 5 g of UO_2 had collected in a can.

After the lid had been screwed on the primary can, the can was reweighed on a previously calibrated Metler balance to determine the final official weight. The gross, tare, and net weights, as well as the lot number, were subsequently recorded on a label attached to the can.

The labeled can was bagged out of the glove box, and two primary cans were placed in an isotope can (∿1-liter capacity).

Health Physics personnel routinely checked the sealed surfaces for leaks using an alpha probe. They also checked randomly selected cans (at the beginning and at the end of the operation) for beta-gamma radiation at distances of 1-1/2 and 12 in. This latter monitoring was performed to confirm that the powder met radiation specifications.

Each can, now sealed in plastic, was reweighed on an O'Haus balance to provide the customer a gross weight which could be easily verified upon receipt. Two of these plastic-covered cans were placed in a numbered isotope can. An aluminum plate (1/16 in. thick), with a diameter slightly less than the inside diameter of the isotope can, was inserted to keep the excess plastic away from the sealing surface between the body of the isotope can and the lid; the can was then sealed.

The sealed isotope can was checked for contamination to ensure the integrity of the plastic after sealing. Two isotope cans were placed in the cavity of a 55-gal shipping drum (DOT-5795 or -5330); the remainder of the void space was filled with crinkled aluminum foil. A blank flange was bolted to the gasketed mating flange on the cavity pipe. The bolts were tightened to 85-in.-lb torque.

The top void space in the drum was filled with nonflammable spacing material. The gasketed lid was inserted, and the drum ring was placed in position and bolted tight. A numbered tamper-indicating seal was

positioned so that it would break if the drum was reopened. The typical loading arrangement for the shipping drums is shown in Fig. 5.12.

Finally, the filled and sealed drums were delivered to a special nuclear material storage vault for temporary storage. When all of the lot analyses had been completed and the lot verified to meet all specifications, a QA tag was attached to each drum; if, for any reason, shipment of the lot (or part of it) was delayed and radiation became excessive, the QA tag was removed and the drummed material recycled.

When the lot was released for shipment by the customer (BAPL), the drummed powder was reinspected (tamper seal, drum identities, etc.) prior to shipment or transfer.

When a lot of UO_2 was to be shipped, the loaded drums were transferred from the storage vault to the ERDA*-approved trailer with ORNL security and Health Physics personnel in attendance. The drums were anchored in position, the security seals given a final inspection, and the drum numbers recorded on a location chart. A copy of the shipping data was then placed inside the trailer. Finally, the trailer doors were closed, locked, and a tamper-proof seal attached.

Both the exterior of the loaded trailer and the interior of the attached tractor cab were surveyed for radiation background; if found acceptable, the package was transferred to authorized ERDA* couriers, who signed a receipt which then allowed the shipment to leave the ORNL area.

5.7.2 Problems encountered and methods of resolution

A pneumatic vibrator was installed on the outer shell of the blender shortly after the start of operations when it was found that the UO_2 powder did not flow freely from the blender. Another problem was encountered with the powder on high-humidity days in that it tended to flow in bursts, resulting in occasional overfilling of a primary can. This situation was remedied by scooping out the excess with a spatula and transferring it to the empty primary can that was scheduled to be used next.

---

*Now DOE.

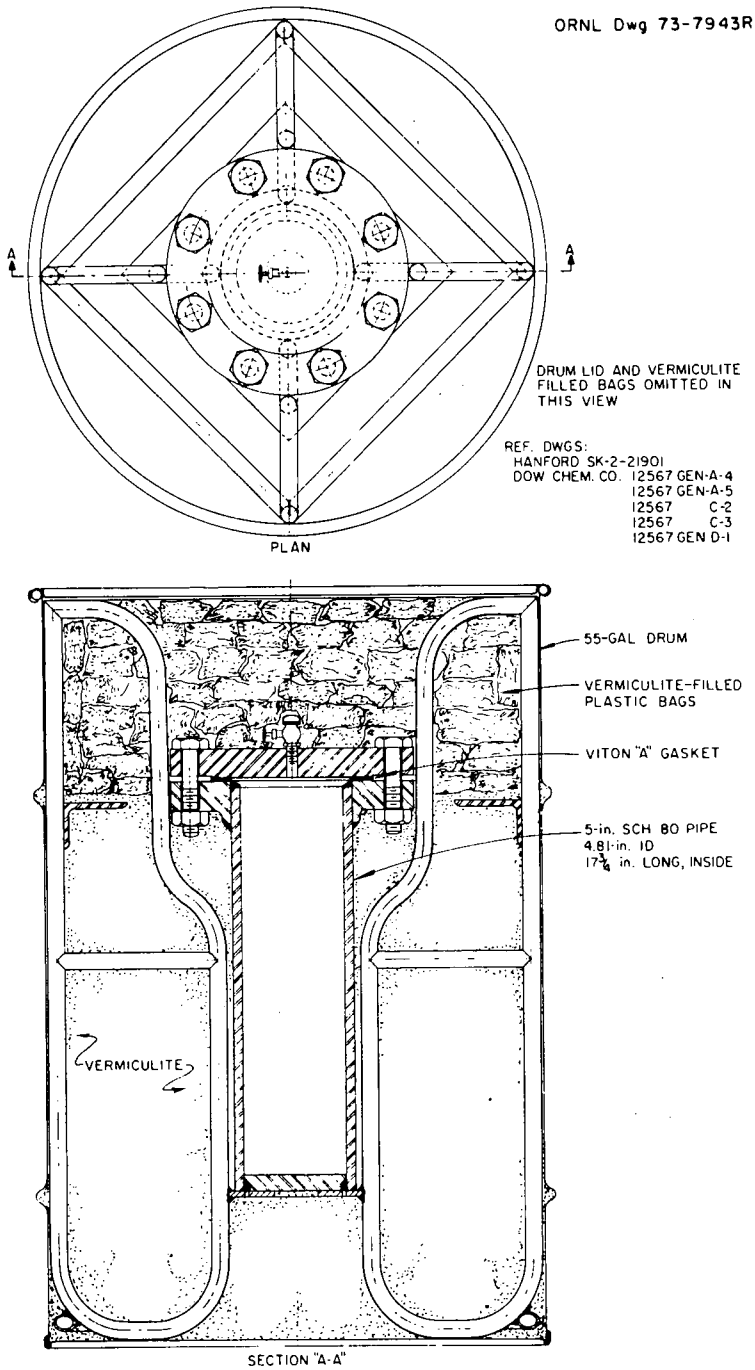

Fig. 5.12. Typical loaded shipping drum.

Used primary cans were returned by the customer after being emptied. Upon return, they were inspected and reused unless damaged or found to contain foreign matter.

The mass limit for the powder-product collection enclosure (G) was increased from 22 kg to 26 kg of ^{233}U in order to meet the production requirements of the customer toward the end of the program. This was done with the approval of the ORNL Criticality Review Committee.

At intervals throughout the program, the rubber gloves used in Enclosure G had to be replaced because the fingers became tacky; also, the radiation background increased because some UO_2 adhered to the tacky surfaces. Tests were run to determine whether different types of rubber gloves were better than the type originally installed; however, since the supply of gloves was limited, we were forced to use those that were readily available.

5.8 Cleanup Operations and Waste Handling

After the final batch of precipitate in a lot had been adequately washed, 4 liters of 0.3 M HNO_3 solution was charged to the UNH metering vessel, sparged, and transferred to the waste recovery vessel where it was sampled and recycled to the solvent extraction system for recovery of the uranium. A second 4-liter batch of 0.3 M HNO_3 was subsequently charged to the UNH metering vessel, transferred to the precipitation vessel where it was circulated, pumped through one Teflon liner in the operating centrifuge to the centrifuge supernate vessel, and finally routed to the waste recovery vessel for sampling and recycle. A third batch of the dilute acid was treated similarly except that it was allowed to pass through the second Teflon liner in the centrifuge. All of this equipment was then given two 4-liter rinses with water and placed in standby.

The washdown vessel in the microwave oven enclosure (Enclosure C) was flushed with 4 liters of 0.3 M HNO_3. This solution was forced, under pressure, through a portable plastic tube to rinse areas containing spilled solids; the internal surfaces of the oven were also cleaned. Any solution remaining in pumps was collected in the washdown vessel by use of vacuum and plastic tubing, sampled, and transferred via rinse vessel No. 1 to the waste recovery vessel for recycle.

Powder spills in all other enclosures (D, E, F, and G) were recovered by use of a portable electric vacuum cleaner. The free-flowing material that collected in the filter bag was shaken into a tared metal can for storage. Finally, the can was sampled for uranium content, weighed, bagged out of the enclosure, and returned to the solvent extraction dissolver for dissolution and recovery of the uranium.

The emptied vacuum cleaner bag, other cloths used in cleanup, and damaged rubber gloves were bagged out of the enclosures and stored in stainless steel 55-gal waste drums. An up-to-date record was kept of the material transferred into the drums. When a drum became filled, it was scanned against a $^{233}UO_2$ standard to determine the uranium content of the waste (Sect. 9). Any drum containing ≤36 g of ^{233}U was transferred to the ORNL aboveground storage facility; any drum containing >36 g of ^{233}U was reopened and the contents monitored and repackaged into additional drums to meet the above specification. Occasionally, this method uncovered certain items with sufficiently high ^{233}U contents to make salvage worthwhile.

The off-gas filters serving Enclosure E, which housed the ADU granulating and boat loading equipment, eventually became loaded with $^{233}UO_2$ dust during operation. When the accumulated dust began to restrict the off-gas flow significantly, the filter element was replaced. The loaded filter was dismantled and the free powder shaken into a collection can for recycle; the remaining uranium was then leached from the filter medium with dilute HNO_3, and the solution was recycled to the solvent extraction system.

5.9 Analysis of Degradation of Specification Requirements (DSR)

Of the 89 lots of ceramic-grade UO_2 powder produced in the ORNL Conversion Facility, only one was rejected for failure to meet specifications. The feed for that lot was contaminated by colloidal carbon due to failure of a pump bearing before it entered the system. Those lots exhibiting higher radiation levels than the specified maximum were held in storage, at the customer's request, for greater than the originally prescribed

16 days. However, all but one and one-half lots were eventually accepted for shipment without reprocessing.

The radiation exposure received by operating personnel varied widely between lots. Increased exposure was received when the uranyl nitrate solution had aged about 4 years and thus contained quantities of ^{224}Ra which exceeded the capacity of the ion exchange column. When some radium (half-life, 3.6 days) passed through the ion exchange column into the product tank and subsequently into the conversion feed tank, the feed solution exhibited a high radiation background (up to 18 mR/hr at 1 ft) that decreased to a minimum by the time it was packaged for shipment. This problem was corrected by passing the aged uranyl nitrate solution through the ion exchange system twice, allowing a minimum of 2 weeks (for decay of radium) between phases. Normal feed solution exhibited a radiation background of about 5 mR/hr at a distance of 1 ft from the feed tank.

Several lots of powder contained impurities at levels greater than originally specified as acceptable. These can be summarized as follows:

1. One lot had a high copper content as the result of using copper tubing to supply steam to a transfer jet in the ion exchange interim product tank. This problem was solved by changing the flowsheet so as to eliminate the need for the interim product tank.
2. Sixteen lots had higher phosphorus contents than originally specified. The source of the phosphorus was found to be the stored uranyl nitrate feed for the ion exchange system. Rather than attempting to purify this large quantity in the solvent extraction system, we sought and received approval to raise the specification limit.
3. Fourteen lots had aluminum contents higher than originally specified. The specification limit for aluminum was also increased.
4. One lot of powder had a high nitrogen content. This lot had a high surface area, resulting in greater sorption of nitrogen

from the air. The surface area of the powder was controlled by adjusting the furnace zone temperatures according to the phosphorus content of the feed.

Three lots of powder which had low surface areas also had low phosphorus contents. Again, surface area was controlled by adjusting furnace temperatures.*

One lot had a portion exposed to hydrogen for less than the specified time because the furnace off-gas lines plugged and hydrogen was interrupted at intervals for safety reasons. This problem was corrected by cleaning the off-gas lines and reducing the hydrogen flow rate.

The examination of two lots revealed the presence of foreign material, which was identified as pieces of granulator screen. The operating procedure was changed to require inspection of the screen after each granulation and its replacement followed by regranulation of the product when a defective screen was detected.

Two lots failed to meet specifications for particle size distribution because they contained less fines than required. This deficiency was probably associated with low surface area.

Two lots of ADU powder were granulated using a 20-mesh screen because a 35-mesh screen (as specified) was not available when required as a replacement.

Several lots of precipitate were dried for times shorter than specified to prevent possible burning. Batch sizes were increased to accelerate production; therefore, the process outline was revised near the end of the program.

6. MATERIAL BALANCE

A uranium balance for the overall program is shown in Table 6.1. The initial allotment of feed material to the program was based on obtaining a product with a maximum ^{238}U content of 0.5%; any material found to be out of specification with regard to ^{238}U was diverted to the ^{233}U pool which was held in storage tanks U-1, -2, and -3. Later, authorization was granted by BAPL to use that portion of the pool material (including a fraction of the material diverted from the ARHW shipments, which was

*The furnace temperature of three lots was purposely held below the minimum in order to compensate for low phosphorus content.

Table 6.1. Material balance for the LWBR Demonstration Program (February 1970-November 1976)

	Uranium (kg)	
	Total	^{233}U
1. Receipts per shipper's estimate		
(A) Nuclear Fuel Services, Inc.	36.182 ± 0.105	35.544 ± 0.103
(B) Savannah River Plant	246.652 ± 0.548	241.948 ± 0.538
(C) Hanford	599.867 ± 1.036	589.779 ± 1.019
(D) Bettis scrap returns	711.446 ± 0.366	699.068 ± 0.356
(E) ^{233}U-pool (ORNL measurement)	81.747 ± 1.036	79.720 ± 1.036
(F) Total receipts	1675.894 ± 1.627	1646.059 ± 1.593
2. Shipper-receiver difference	6.292 ± 0.060	6.166 ± 0.058
3. Total to account for	1669.602 ± 1.628	1639.893 ± 1.594
4. Shipments out		
(A) BAPL	1543.646 ± 0.020	1516.308 ± 0.020
(B) To R&D	0.322 ± 0.004	0.316 ± 0.004
(C) Approved transfers to other programs	3.485 ± 0.017	3.420 ± 0.017
Total	1547.453 ± 0.027	1520.044 ± 0.027
5. Waste discards	19.930 ± 1.177	19.531 ± 1.153
6. Inventory		
(A) Unused oxide (Savannah River Plant + Lawrence Livermore Laboratory	5.086 ± 0.025	4.991 ± 0.025
(B) Off-specification material to Tank U-1	8.604 ± 0.112	7.996 ± 0.104
(C) Archive samples	0.937 ± 0.005	0.919 ± 0.005
(D) Stored pure nitrate (U-10)	70.455 ± 0.916	69.102 ± 0.893
(E) Waste drums awaiting disposal	0.210 ± 0.027	0.205 ± 0.026
(F) Scrap residuals	0.239 ± 0.001	0.233 ± 0.001
(G) Process system holdup (measured)	13.209 ± 0.172	12.944 ± 0.169
(H) Piping holdup (estimated) + analytical samples	0.160 ± 0.043	0.157 ± 0.042
Total inventory	98.900 ± 0.940	96.547 ± 0.916
7. Total accounted for	1666.283 ± 1.507	1636.122 ± 1.473
8. Difference	3.319 ± 2.218	3.771 ± 2.170
(±1 standard deviation)	0.2 ± 0.13%	0.23 ± 0.13%

also held in tanks U-2 and U-3). Accordingly, in Table 6.1, item 1(E) is the quantity from the pool (on hand prior to this program) that was eventually included when the ^{238}U specification was raised to 1.25%. Uranium from Hanford that was included in the receipts but diverted to tank U-1, which contained the ^{233}U of highest ^{238}U content, is shown in item 6(B).

The error bands associated with the receipts listed in item 1(A) through (D) are those of the shipper. All others were computed based on ORNL measurements, taking into account the errors inherent in weighing, volume determination, chemical analysis, and isotopic abundance determinations.

The material balance for the entire program amounted to a feed-accounted-for difference of 0.2 ± 0.13% (at one standard deviation). This provides assurance (95% confidence) that we have accounted for all material processed during the program.

7. QUALITY ASSURANCE

The requirement to maintain a QA program was included in the contract with BAPL. Details are contained in an official BAPL document.[8] Any changes in these requirements were officially transmitted to ORNL in the form of "Change Notices" and approved engineering changes, "REC-....". Accordingly, in the "Certificate of Compliance" (Fig. 7.1), which was required for each lot of UO_2 shipped, reference was made to all of the "Change Notices," approved requests for engineering changes (REC-...._, and any approved deviations from specifications (DSR-....) or original process conditions.

The BAPL document included all the requirements relating to the source feed material, manufacturing processes, operating procedures and facilities (and also qualifications), program phases, identification, properties of the powder, and process controls. In addition, the section on QA Provisions lists those requirements involving necessary approvals, Quality Control plans, inspections, qualifications, test results, records and records handling and retention, sampling plans, and certification. Other sections include those requirements related to packaging and shipping the powder and the procedures to be used by BAPL in ordering and

OAK RIDGE NATIONAL LABORATORY
CERTIFICATE OF COMPLIANCE
$^{233}UO_2$ POWDER FUEL FOR LWBR FUEL
LOT NO. 165

This is to certify that the above identified lot of $^{233}UO_2$ powder meets Bettis specifications set forth in MEP-CM-3309A, revised 8/6/73; that the powder was prepared in qualified equipment operated by qualified personnel according to our Process Outline (submitted under A.R. No. 459400-15A) and our Quality Verification Plan (submitted under A.R. No. 459400-21) using ^{233}U-source material approved by purchaser under Westinghouse Electric Corporation Purchase Order No. 73-Y-459400-M (Oct. 4, 1969), including Changes Notices 1 through 14, except as follows:

1. DSR-459400-07 (Reference only)
2. DSR-459400-08 (Reference only)
3. REC-459400-01
4. REC-459400-02
5. REC-459400-03

Date
W. T. McDuffee, Technical Group Leader
Quality Control, LWBR Project
Pilot Plant Section
Chemical Technology Division

Date
J. R. Parrott, LWBR Project Leader
Pilot Plant Section
Chemical Technology Division

Fig. 7.1. Typical Certification of Compliance.

releasing the uranium feed materials for powder manufacture and the UO_2 powder product for shipment. The following sections of this report discuss the actions taken in complying with the requirements of the BAPL document.

7.1 Quality Verification Plan

In compliance with the requirements of the BAPL specifications,[8] a Quality Control (QC) program was developed by ORNL and approved by BAPL prior to commencing operations. The next step was to develop a plan[9] that presented all aspects of the quality requirements relative to feed materials, process facilities, the manufacturing process, and the qualification of the finished powder and its packaging, handling, and shipment. The manufacturing process, shown schematically in Fig. 7.2, presents the operating ranges of each parameter. The QC program for the process is shown schematically in Fig. 7.3, which presents each item or area that is controlled and identifies each quality control release point.

Other details covered in the Quality Verification Plan and in the BAPL document are discussed below.

7.2 Feed Material

On receipt of the feed material from the production sites, it was segregated according to uranium isotopic content and/or gross impurity content as indicated by the respective shipper. The fraction of the feed source material being stored as nitrate solution (including that resulting from the dissolution of powder from SRP and from NFS, which was stored in Tank U-5) was sampled and analyzed. The results were then used to qualify the solution against specifications for feed material (Table 7.1). In general, these specifications were identical to those for the UO_2 powder product with respect to isotopic uranium content and impurities, except for the halide, nitrogen, and thorium contents. Thereafter, only material from these qualified lots was authorized for release to the manufacturing system. The qualification data for all of the initially stored nitrate feed are shown in Table 7.1.

The SRP material remaining after initially dissolving ∿56 kg of the uranium to combine with the NFS material (Table 7.1) was stored in the

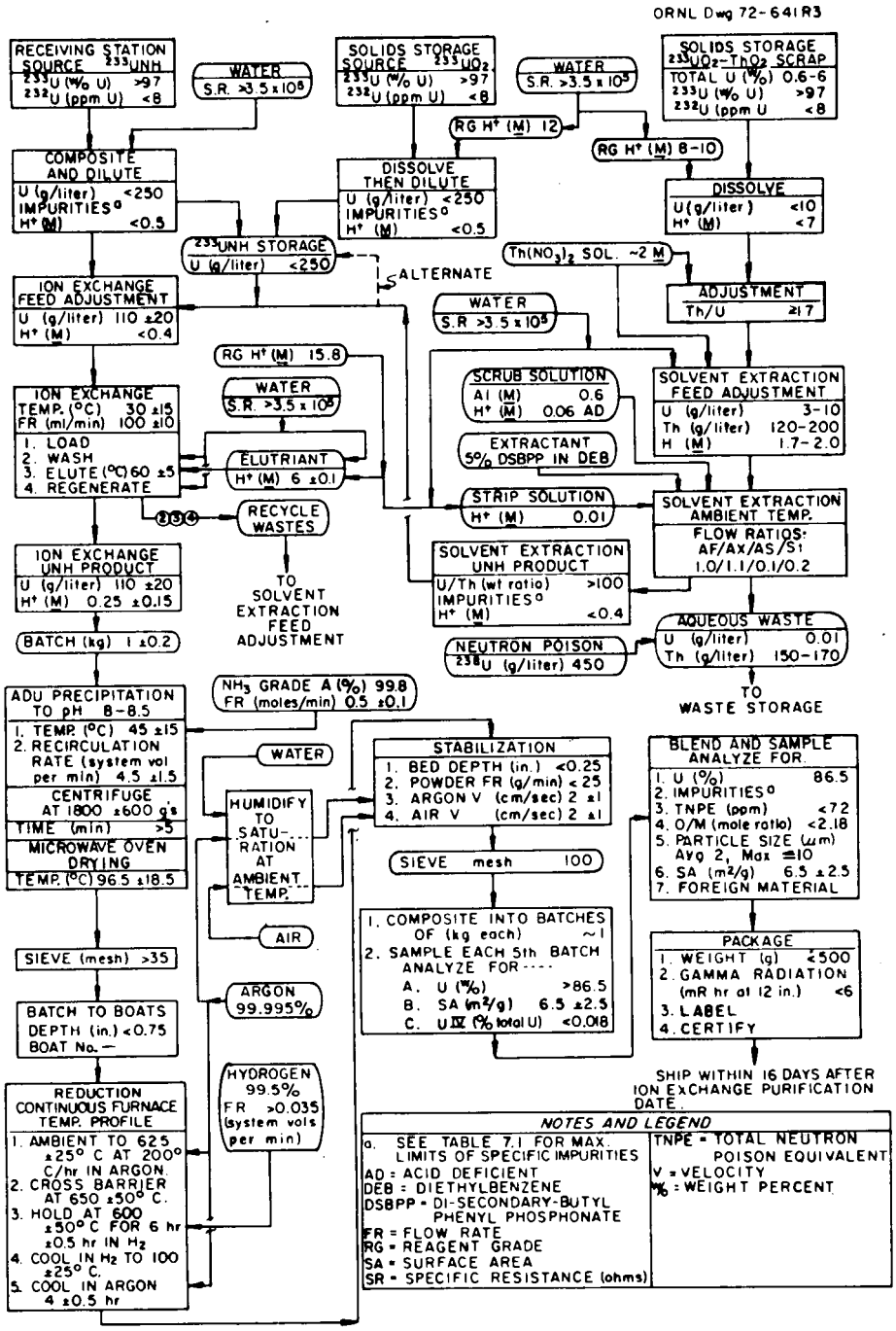

Fig. 7.2. Chemical process flowsheet: production of $^{233}UO_2$ powder for LWBR program.

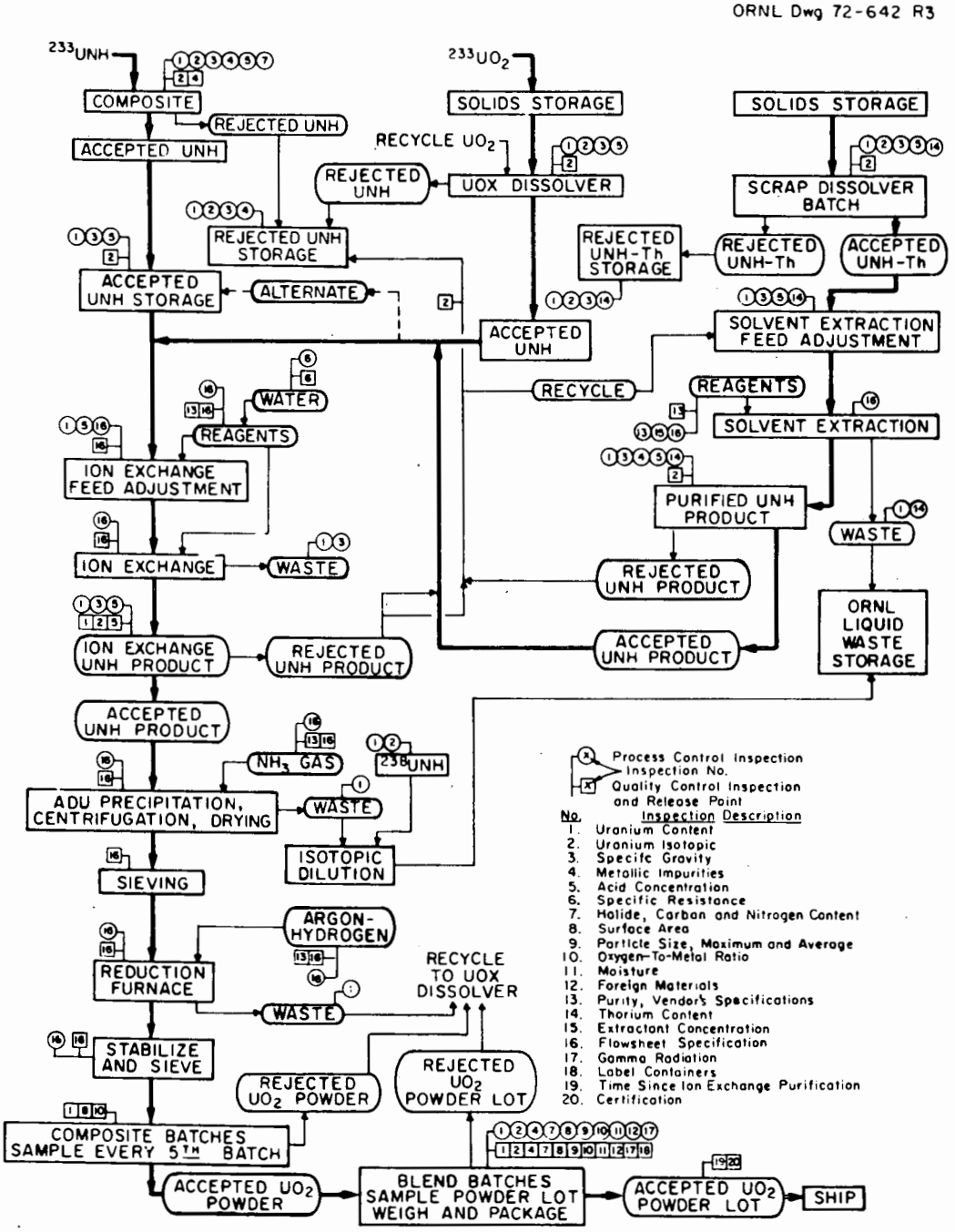

Fig. 7.3. Process and quality control flow diagram: production of $^{233}UO_2$ powder for LWBR Program.

Table 7.1. Inventory of $^{233}UO_2(NO_3)_2$ feed material

	Specification	Tank No. U-2	U-3	U-5	U-6	U-7	U-8	U-9	U-10
Total uranium, kg	a	84.49	102.39	89.58	100.89	101.31	100.78	95.79	83.06
Uranium conc., g/ℓ	a	250.0	255.2	234.8	250.5	254.8	258.0	257.2	259.3
^{232}U, parts per 10^6 parts U	≤10	7	7	6.7	8.5	9.2	8.6	8.8	10.4
^{233}U, wt %	≥97	97.55	98.02	97.91	98.43	98.48	98.50	98.58	98.51
^{234}U, wt %	<2.5	1.102	0.985	1.518	1.188	1.223	1.1199	1.204	1.231
^{235}U, wt %	<0.5	0.078	0.022	0.224	0.022	0.020	0.021	0.019	0.021
^{236}U, wt %	<0.1	0.006	0.001	0.064	<0.001	<0.0005	<0.0005	<0.0005	<0.0005
^{238}U, wt %	<0.5[b]	1.268	0.968	0.282	0.359	0.276	0.274	0.199	0.238
Impurities, wt ppm UO_2									
Al	250	640	<3	280	10	25	25	13	16
B	3	<4	0.1	<1	9	3.5	<1	<1	<1
Ca	50	200	<3	39	21	25	19	13	12
Cd	a	—	—	<3	<3	<3	<3	<3	<3
Co	15	—	—	<1	<1	<1	1	<1	<1
Cr	100	116	<1	26	<5	19	<7	6	8
Cu	40	60	<2	<3	<3	13	<3	<3	<3
Fe	400	460	7	525	26	45	25	25	38
Hg	30	315	—	<9	<9	<9	<9	<9	<9
Mg	100	246	<0.7	<25	26	<26	<26	<26	<26
Mn	20	18	<0.4	< 1	<1	<1	6	<1	<1
Mo	100	—	—	< 9	<9	<9	<9	<9	<9
Ni	200	81	<1	< 5	<5	4	<5	<4	<4
P	500	105	7	12	73	190	146	77	70
S[c]	75	—	—	—	—	—	—	—	—
Si	200	25	3	<44	<44	<44	<44	<44	<44
Ti	20	—	14	<18	<44	<44	<44	<44	<44
Th	1000	7000	26	<9	285	<9	<9	<9	<9
V	50	—	—	<9	<9	<9	<9	<9	<9
^{239}Pu	25	—	—	<9	<9	<9	<9	<9	<9

[a]None listed, but nuclear safety considerations limited uranium concentration to ≈250 g/ℓ.

[b]At the beginning of the program; later the ^{238}U specification was changed to 1.25% (Change Notice No. 17).

[c]Specification for sulfur was added after feed had been qualified and accepted.

Solid Storage Facility until needed. At that time, a series of dissolutions (∿5 kg of uranium each) was conducted, and the resulting solutions were composited in one of the storage tanks. The composite solution was then sampled and qualified against the updated specifications, as were the original lots of solution.

7.3 Purification Processes

Two purification systems were used in preparing uranium feed for the conversion: (1) the solvent extraction system, and (2) the ion exchange system.

All dissolved binary scrap and all of the recycle scrap nitrate solutions with high concentrations of acid (>0.5 M) and metallic impurities were processed through the solvent extraction system. Except for thorium content, the uranium product solution recovered from the solvent extraction system usually met the specifications for release to the conversion system. The solution was exceptionally free of ^{232}U decay daughters, including ^{228}Th. The ^{228}Th separation was obtained by isotopic dilution with the bulk ^{232}Th that is required in the process.

The ion exchange system was used when it was necessary to reduce the ^{232}U daughter content of all aged purified nitrate solution (including solvent extraction product solution) released to the conversion system. Some, although small, separation of the trivalent metallic impurities was achieved. Each purified uranyl nitrate solution from the ion exchange system was examined for compliance with isotopic and chemical property specifications prior to its release to the manufacturing process. Table 7.2 compares the qualification data of a typical lot of purified uranyl nitrate feed solution with the specifications for such material.

7.4 Manufacturing Process

The manufacturing process deals only with the conversion of uranyl nitrate to ceramic-grade UO_2. The preceding purification steps that were required to remove the gamma-emitting ^{232}U daughters, although not quality requirements per se, were required to enable the conversion process to be conducted in unshielded facilities featuring direct access by operating

Table 7.2. Qualification data for typical purified $^{233}UO_2(NO_3)_2$ feed solution

	Specification	Qualification data
U conc., g/ℓ	100 ± 10	112.9
HNO_3 conc., M	0.25 ± 0.15	0.3
^{232}U, parts per 10^6 parts U	≤10	6.8
^{233}U, wt %	≥97	98.08
^{234}U, wt %	<2.5	1.449
^{235}U, wt %	<0.5	0.158
^{236}U, wt %	<0.1	0.053
^{238}U, wt %	<0.5	0.260
Impurities, wt ppm UO_2 (max.)		
Al	250	50
B	3	0.7
Ca	50	30
Cl + Br	25	23,<1
Co	15	<0.4
Cr	100	9
Cu	40	3
F	30	<5
Fe	400	133
Mg	100	<3
Mn	20	2
Mo	100	<2
Ni	200	4
P	500	110
S	75	50
Si	200	35
Ti	20	<3
Th	500	<10
V	50	<0.3
^{239}Pu	25	<7

personnel and to permit shipment of the powder to BAPL while the radiation was still within tolerances for direct handling.

A parametric study[9] of the conversion process was completed prior to the design, construction, and operation of the conversion system. The results of this study were used to develop a process outline[6] that was later tested in the conversion facility. After the initial equipment testing had been completed, three short, integrated runs were conducted to produce ∿20 kg of $^{233}UO_2$ powder. These preproduction lots of powder were shipped to BAPL for use in an evaluation of the quality of the product and its suitability for the intended use. On the basis of the results of this evaluation, BAPL declared the conversion system, the operating staff, and the operating procedures to be qualified.

A total of 189 lots of $^{233}UO_2$ powder, ranging in size from 15 to 25 kg, were then produced. Three of the lots (Lot 119 and one-half each of Lots 145 and 147) were not shipped to BAPL; instead, they were stored at ORNL for a prolonged period (4 to 6 weeks) and then recycled at BAPL's request. Production of one lot (179) was aborted midway in the process because of a bearing failure in a recirculating pump which resulted in contamination of the feed material.

Process control. Once a lot of feed solution had been released for oxide manufacture, volumes of this solution containing 1000 ± 200 g of uranium were transferred to the system and precipitated with NH_3 gas; the resulting slurry was then centrifuged and washed with water. The resulting ADU was dried in a microwave oven. Any lumps in the dried powder were broken up by passing the material through a 35-mesh sieve. Each sieved batch was then divided into four equal sublots and loaded into Inconel trays (boats) which were passed through a hydrogen reduction furnace. The fired powder (UO_2) was stabilized by contacting a thin layer successively with moist argon and moist air. The four sublots of fired powder were subsequently recombined and resieved, this time through a 100-mesh screen. Each batch of UO_2 was temporarily stored, pending release to the UO_2 blender, based on analyses of prescribed samples. The first batch and, at a minimum, every fifth succeeding batch of the recombined $^{233}UO_2$ batches were sampled and analyzed

for compliance with finished product specifications for uranium content, surface area, and O/M ratio. When these analyses were found to meet the required specifications, the batches were released for blending.

Product quality. After the entire lot of material had been homogenized in the blender, duplicate samples were removed for each series of examinations. One set of duplicate samples was examined for chemical properties and physical characteristics, one set was analyzed to determine the metallic impurities, one set was retained for our archives, and one set was assigned to accompany the shipment for BAPL verification analyses.

The results of the analyses and inspections of a typical lot of $^{233}UO_2$ powder are shown in Table 7.3. Similar data for a number of other lots of powder shipped to BAPL at various stages of the program are given in the Appendix.

Statistical control procedures. In complying with the requirements of the QC Program, it was necessary to keep charts showing the control limits to be determined such that at least 95% of the total ordered quantity of $^{233}UO_2$ powder would meet the specific quality or characteristic with 95% confidence. Procedures were developed to calculate the statistical (control) limits, and a computer program was written to accomplish this goal.[10,11]

Important benefits of the computer program that accrued as a result were:

1. All of the raw data related to the qualification and shipment of each lot of powder were retained in the computer memory (or on punched tape).
2. The current weighted averages of all specified attributes of the $^{233}UO_2$ powder produced and shipped, including the last lot, were calculated and retained in the memory of the computer.
3. The statistical limit of each specified characteristic was calculated for the total quantity shipped, including the current lot.
4. All of the results from the calculations were available in the desired form as computer printout.

Table 7.3. Summary data sheet for a typical lot of $^{233}UO_2$ powder

Lot No. 180
Shipment No. 89
Shipment date 04/07/76
Purification date 03/18/76
Sample code LOP-180

	Specs.	Sample 1	Sample 2	Avg.	Cum.	Stat. limit
U conc., wt %	>86.5	87.34	87.37	87.35	87.31	86.94
^{232}U, parts per 10^6 parts U	<10.0	6.5	6.9	6.7	7.7	9.6
^{233}U, wt %	>97.0	98.130	98.130	98.130	98.279	97.896
^{234}U, wt %	<2.5	1.132	1.131	1.132	1.312	1.559
^{235}U, wt %	<0.5	0.056	0.054	0.055	0.088	0.218
^{236}U, wt %	<0.1	0.013	0.013	0.013	0.023	0.070
^{238}U, wt %	<1.25	0.671	0.674	0.672	0.299	0.575

Impurities, ppm UO_2

	Specs.	Sample 1	Sample 2	Avg.	Cum.	Poison equiv. Lot	Poison equiv. Cum.	Stat. limit
Al	250	65.0	65.0	65.0	121.0	0.6	1.2	
B	3	1.0	1.3	1.2	0.6	34.5	17.6	
C	500	23.0	19.0	21.0	19.0	0.0	0.0	
Ca	50	3.0	7.0	5.0	7.2	0.4	0.5	
Cl	a	10.0	15.0	12.5	11.7	15.0	14.0	
Br	a	≤1.0	≤1.0	≤1.0	0.8	1.2	1.0	
Co	15	<0.3	<0.5	<0.4	0.5	0.4	0.5	
Cr	100	10.0	10.0	10.0	10.7	0.7	0.7	
Cu	40	≤1.0	≤1.0	≤1.0	6.3	0.1	0.6	
F	30	3.0	5.0	4.0	1.8	0.0	0.0	
Fe	400	58.0	48.0	53.0	94.6	3.2	5.7	
Hg	30	<0.5	<0.5	<0.5	0.6	0.6	0.7	
Mg	100	1.0	1.0	1.0	1.8	0.0	0.1	
Mn	20	1.0	1.0	1.0	1.7	0.3	0.6	
Mo	100	<1.0	<3.0	<2.0	1.5	0.2	0.2	
N	50	17.0	17.0	17.0	20.7	1.9	2.3	
Ni	200	10.0	10.0	10.0	12.6	1.1	1.4	
P	500	230.0	300.0	265.0	209.5	7.9	6.3	
S	75	10.0	20.0	15.0	17.2	0.3	0.3	
Si	200	20.0	30.0	25.0	41.6	0.5	0.8	
Ti	20	≤1.0	≤1.0	≤1.0	1.2	0.2	0.2	
Th	500	≤10.0	<10.0	<10.0	11.9	0.0	0.0	
V	50	<0.1	<0.5	<0.3	0.5	0.0	0.1	
^{239}Pu	25	<5.0	<5.0	<5.0	5.1	0.0	0.0	
TNPE	<72					69.1	54.7	57.1

Supplementary data

	Specs.	Sample 1	Sample 2	Ave.	Cum.	Stat. limit
Photo	b	Accept	Accept	Accept		
Surface area, m^2/g	6	6.0	5.9	5.9	5.6	
Upper stat. limit	6+3					8.1
Lower stat. limit	6-2					3.1
O/M mole ratio	<2.18	2.04	2.04	2.04	2.04	2.06
Moisture, wt %	<0.5	0.24	0.24	0.24	0.20	0.31
Ave. particle size	<2.0	0.7	0.7	0.7	0.7	1.0
Porosity				0.80		
Particle size dist.						
<50 μ	>96.0	99.7	99.6	99.7	99.5	
<10 μ	>90.0	96.0	96.0	96.0	95.0	
<2.5 μ	>50.0	62.0	61.0	61.5	60.5	
Proj. radiation, mR/hr, from 500 g powder at 1 ft on 16th day	<7.5	3.7	3.7	3.7	5.1	7.7

[a]Cl+Br (max.), 25.

[b]Reject for any sample = reject for average.

The advantages of the program are illustrated by the printout (see Table 7.3), which includes lot identification, purification data of the feed material, and the measured attributes for which a specification was included in the quality control requirements. The results of inspections (or analyses) of duplicate samples plus the average of the two, the current weighted average of material shipped to date, and the statistical limits of each measurement are also included. The "Impurities" section of the table lists, in two additional columns, the neutron poison equivalent of each impurity (calculated by the computer) for the current lot of powder as well as the weighted average for all the powder shipped, including the current lot.

8. SCRAP RECOVERY

The contract with BAPL included an agreement to recover the uranium from the pellet fabrication scrap generated at BAPL. This scrap consisted of grinder sludge and binary ThO_2-UO_2 powder and pellets. A dissolver and various auxiliary equipment, utilizing HNO_3 dissolvent, were especially designed for the scrap recovery operation and installed in a process cell.

In addition, the UO_2 and ADU scrap generated in the manufacture of $^{233}UO_2$ at ORNL, as well as any unused $^{233}UO_2$ powder returned by BAPL, were solubilized in HNO_3 in an existing dissolution system. The resulting nitrate solution was either directed to storage or to the solvent extraction system, depending on its acid and impurity contents. As a rule, the solutions from the $^{233}UO_2$ scrap had sufficiently low impurity levels to be released directly to the ion exchange system; however, those resulting from the dissolution of ADU had excessive HNO_3 concentrations and therefore had to be purified in the solvent extraction system prior to processing through the ion exchange system.

Quantities of binary scrap and $^{233}UO_2$ powder amounting to 28.5 MT and 40 kg, respectively, were returned from BAPL for dissolution and uranium recovery.

8.1 Dissolution of Binary Pellets and Powder Scrap

Binary scrap returned from BAPL consisted primarily of fired pellets (whole and fragmented), with lesser quantities of blended UO_2-ThO_2 powder

and dried/baked grinder sludge. The pellets were of several sizes ranging from 0.25 in. diam x 0.5 in. long to 0.5 in. diam x 0.6 in. long. The powders and baked grinder sludge, which were finely divided, dissolved rapidly as received; the pellet scrap, however, dissolved very slowly and had to be broken into smaller fragments in a crusher-mill in order to achieve a reasonable dissolution rate.

The scrap was shipped from BAPL in screw-top aluminum cans, each of which was fitted with a gasket made of fiber (for pellets) or rubber (for powder). The primary container (∿3 in. diam x ∿5 in. long) was sealed in a plastic bag and inserted in a secondary can (∿4 in. diam x ∿6 in. long) that was crimp-sealed. On removal from the shipping carrier, each can assembly was identified and checked against the shipping record prior to its transfer to the charging box for the binary scrap dissolver (see Fig. 8.1). After each can was opened, its contents were transferred to the dissolver through the crusher. The crusher discharged the resulting powder and crushed pellets into the dissolver chute that fed into the upper section of the "basket." Although the nominal capacity of the basket was 200 kg of binary pellet scrap, we found that 250 to 275 kg of crushed scrap could easily be charged (some of the excess being held in the charging chute) without difficulty. As the charge in the basket dissolved, the material in the chute fell into the basket and became exposed to the dissolvent, a 12 $\underline{M}$ HNO_3--0.1 $\underline{M}$ Al--0.04 $\underline{M}$ F^- solution. This was important since the thorium dissolution rate is dependent on the surface exposed to the dissolvent.

During the dissolution of the scrap, which was conducted at 100 to 105°C, the dissolvent was continuously sparged. The dissolution was terminated when the thorium concentration reached 250 g/liter as indicated by an equivalent sp gr of 1.52. The dissolver solution was then cooled and subsequently withdrawn through an in-line filter (to remove any coarse solids); the filtered product was collected in a catch tank.

During the first 15 campaigns, the dissolver solutions were released directly (without a filter) to one of the large vessels used to prepare feed for the solvent extraction system. However, accountability of the dissolved material was not sufficiently precise since the tank was large

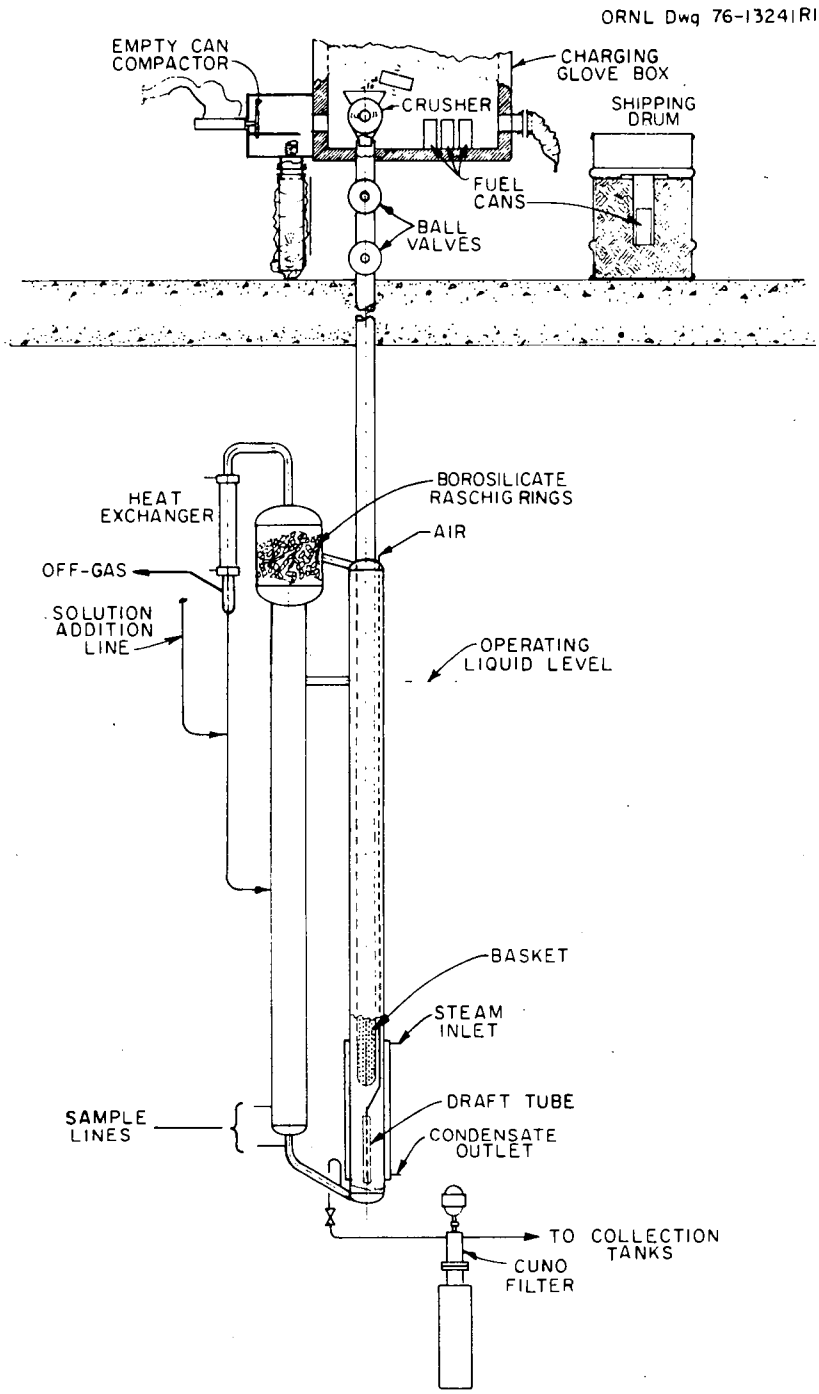

Fig. 8.1. ThO_2-UO_2 binary scrap dissolver.

and extraneous solutions from other sources were also being accumulated in it at the same time. The removal of solids became a necessity when grinder sludge became available for dissolution. Accordingly, two tanks dedicated to accumulating dissolver solution were added to the system to improve the measurement of dissolved scrap solutions, and a Cuno filter was placed in the withdrawal line of the dissolver to remove the solids. The filter element, which was motorized for efficient operation, was operated after each run and also whenever the flow became restricted.

Large quantities of solids were observed when baked grinder sludge was dissolved along with binary pellet scrap. Analyses of randomly selected batches of grinder sludge showed that from 2 to 10% of the sludge was insoluble in the dissolvent. Analyses of the solids contained in dissolved grinder sludge indicated the following principal components:

Impurity		ppm (uranium basis)
Al		Major
C		500
Ca		400
Cr		500
Fe		4000
Si		500
Th		Major
Cu	each	100-200
Mg	each	100-200
Mn	each	100-200
Pb	each	100-200
Zr	each	100-200

The dissolver solutions that accumulated in the catch tanks (two were available) were sampled for accountability determinations and transferred to the solvent extraction system for separation and recovery of the uranium as a high-purity nitrate solution.

The results of processing the binary scrap returned from BAPL are shown in Table 8.1. Because a large inventory of crushed pellets had to

Table 8.1. Recovery of uranium from BAPL binary scrap (as of October 30, 1976)

Campaign	Scrap receipts (kg)		Quantity recovered (kg)	
	Thorium	Uranium	Thorium	Uranium
1-15	16,629.1	485.294	17,217.0	480.910
16	1,307.8	30.516	1,282.4	30.019
17	1,441.4	31.744	1,428.7	31.244
18	1,135.9	26.206	1,110.5	25.611
19	730.3	22.241	725.7	21.940
20	1,111.1	35.751	1,089.3	35.077
21	1,246.7	36.238	1,227.7	36.685
22	388.4	8.617	402.6	8.829
Total	23,990.7	676.607	24,483.9	670.315
Shipper — receiver difference			493.2	6.292

be maintained in the dissolver to ensure practical dissolution rates, the binary scrap recovery program was conducted in campaigns. Each campaign involved dissolving the scrap contained in a group of four to five shipments, each of which began with the dissolver empty and concluded with a series of cleanout dissolutions to ensure that all material was dissolved.

8.2 Uranium Oxide and ADU Scrap

Uranium oxide scrap (a total of 4 kg of uranium) returned from BAPL was packaged in two types of containers:

1. Unopened shipping cans as originally packaged at ORNL. These stainless steel cans, sealed with a rubber-gasketed screw top, were double bagged in plastic; two were placed in a sealed isotope can. Two isotope cans were included in each shipping container.
2. The same type of can used for the binary scrap (see Sect. 8.1).

As a rule, the UO_2 powder that was returned from BAPL in the unopened original cans (item 1 above) had been stored at BAPL for excessive time periods, resulting in high gamma radiation from the decay daughters of ^{232}U. Consequently, the metallic impurity levels were unchanged from those in the original product powder.

The remaining powder returned from BAPL was high-quality material consisting of unused samples, residuals from batches chosen for blending with ThO_2, etc. High-quality UO_2 scrap was also generated in the conversion facility at ORNL during production of the UO_2. This scrap was of the following two types:

1. UO_2 powder from sample residuals and single batches of powder that had been rejected for QC reasons such as out-of-specification furnace conditions, powder texture, or other physical characteristics, and powder that had been recovered from equipment during the cleanout operations following each run.
2. ADU scrap (containing ammonia) that originated in batches which had been rejected because of ignition during the drying cycle and subsequent contamination by fluoride from the Teflon

container. In addition, some powder was recovered from process equipment and the off-gas filters during postrun cleanout operations.

The two types of scrap were accumulated separately for subsequent dissolution.

In addition to the internal scrap mentioned above, several of the finished lots of UO_2 powder held at ORNL were not used because BAPL could not accept delivery. These lots initially met all specifications, including aging after purification; however, the powder was dissolved and returned to the process in accordance with BAPL instructions.

Dissolution of both the UO_2 powder and the ADU was conducted in the oxide dissolver described in Sect. 3.2.2. As described earlier, the batch size was limited to 5 kg of uranium for nuclear safety reasons. The cans of material were chosen, identified, and then transferred into the charging box. A volume of water calculated to give a final uranium concentration of <250 g/liter when mixed with the dissolver solution was added to the catch tank. The 1.9-liter solution "heel" remaining in the dissolver from the previous run was taken into account in these calculations. Approximately 11.5 liters of aqueous nitric acid solution, containing sufficient HNO_3 to yield a HNO_3/U mole ratio of 2.3 ($\sim$4 for ADU), was added to the dissolver and the temperature brought to 60°C while sparging gently with air. With both ball valves open, the cans of powder were emptied into the dissolver via the charging chute. After an inspection for material lodged in the chute was completed (which ensured that all material was in the dissolver), the ball valves were closed and the temperature raised to 95 to 99°C, where it was held for 2 hr after the recorded specific gravity of the solution became constant.

After it had been allowed to cool, the dissolver solution was drained to the catch tank, leaving a liquid heel of 1.9 liters of the dissolver. The contents of the catch tank were mixed by air sparging and then sampled. Normally, two dissolutions were completed and the resulting solutions combined prior to sampling. The samples from the catch tank were analyzed for compliance with feed source material specifications as stated in the QC Program Plan. If acceptable, the solution was sent to "acceptable nitrate feed source material" storage; if not, it was stored independently

for future purification by solvent extraction. Degradation of the uranium quality with respect to isotopic uranium content did not occur during the program; however, as previously stated, all solutions from ADU dissolutions required purification by solvent extraction. These solutions were isolated and stored for purification in the solvent extraction system.

The chemical characteristics of a typical dissolver solution are as follows:

	Uranium (g/liter)	HNO_3 (M)	sp gr
From UO_2 powder			
Raw dissolver solution	400	0.35	1.56
Diluted solution	245	0.22	1.34
From ADU			
Raw dissolver solution	440	2.8	1.57
Diluted solution	240	2.0	1.42

Uranium material balances were constructed around each pair of dissolutions (occasionally only one) using shipper's values for determining the input and results of analyses of samples of the diluted dissolver solution and measured volumes for obtaining the output. The uranium content of the solution drain heel (known from previous measurements to be 1.9 liters) was taken into account in constructing the balance. If a deficit appeared, the charging chute was inspected visually for caked material. Any that was found was physically dislodged and flushed into the basket with limited volumes of water; a series of cleanout dissolvings was then performed until no more uranium appeared in the dissolver solutions. With these additional measurements, a final balance was reconstructed and the difference, if any, determined. Within the limits of accuracy of our measurements, this procedure accounted for all of the material that had been charged to the $^{233}UO_2$ dissolver.

9. WASTE MANAGEMENT

Liquid and solid wastes containing a total of 20.65 kg of uranium were generated during the program. This quantity represented 0.3% of the total uranium processed through each subsystem (including internal recycle). The sources of waste are described below.

9.1 Liquid Waste

Wastes discarded to the ORNL Liquid Waste Storage Facility contained a total of 13.79 kg of uranium, which originated from the sources listed in Table 9.1. All liquid waste streams were analyzed for ^{233}U for accountability prior to disposal. Generally, when the measurements indicated a ^{233}U content of <0.01 g/liter, the solutions were discarded to the Liquid Waste Storage Facility. For criticality control, discarded solutions were routinely accompanied with sufficient depleted uranium (as a soluble neutron poison) to establish a $^{238}U/^{233}U$ ratio of 100.

Table 9.1. Sources of uranium in liquid waste

Source	Distribution of uranium sources for liquid waste (%)
Solvent extraction	74
Ion exchange	4
Conversion process	9
Analytical determinations	10
Miscellaneous	3

9.2 Dry Waste

A total of 6.35 kg of uranium as dry, contaminated waste was generated in the form of cleaning materials, empty containers, discarded tools and equipment, etc. This waste was collected and stored in 389 airtight, 55-gal stainless steel drums for eventual transfer to the ORNL retrievable waste storage facility. A limit of 36 g of ^{233}U per drum was specified both for criticality control[12] and for radiation background control at the waste storage facility. Nondestructive assay[13] of the accumulated waste in each drum ensured compliance with the ^{233}U limit of 36 g per drum and provided complete accounting for ^{233}U. In addition, this practice ensured the detection of recoverable quantities of ^{233}U that may have been placed in a waste drum and otherwise discarded.

9.2.1 Waste-drum assay technique

The ^{233}U content of a waste drum was determined by a nondestructive assay method based on a scintillation counting technique. This technique (a modification of the one described in ref. 13) utilizes gamma emission from the ^{232}U daughter, ^{208}Tl (see Fig. 4.4, Sect. 4.2). The 2.6-MeV gamma ray emitted during the decay of ^{208}Tl is used to quantify the ^{233}U content in the waste drum by standardization with a known quantity of uranium of similar age and ^{232}U content.

The equipment used in the assay (shown in Fig. 9.1) is described in detail elsewhere.[13] The assay procedure included counting the emissions of the unknown quantity of waste in the drum, counting the known sample, and then comparing the two counts. Corrections were applied for self-shielding, physical distribution, and background.

9.2.2 Accuracy of assays

Three variables that significantly influence the accuracy of a waste drum assay are the $^{232}U/^{233}U$ ratio, the age of the waste, and the total uranium content. (Other variables that affect such assays have been addressed elsewhere.[13,14])

The $^{232}U/^{233}U$ ratio in the uranium used for the LWBR Demonstration Program ranged from 5.8 to 9.2 ppm (mean, 7.5 ppm). The waste-drum contents

Fig. 9.1. ^{233}U assay facility for waste drums.

usually represented contributions from several sources and therefore made averaging of the ^{232}U content within a drum necessary in some cases. Since these contributions were the result of uncontrolled cross-mixing, corrections for ^{232}U content were generally not available; thus consideration of the $^{232}U/^{233}U$ ratio in the assay of a waste-drum contents was eliminated.

The chemical processing of ^{233}U provided varying degrees of separation of the ^{232}U daughters (see Sect. 4). This interruption of the decay chain (and hence the ^{208}Tl activity) was temporary, however, with ^{208}Tl activity gradually growing back into the ^{233}U as shown in Fig. 9.2.[13] Nevertheless, the ^{208}Tl growth and decay as a function of time defined the age of the ^{233}U. Uncontrolled cross-mixing complicated the determination of the waste age. Consequently, an estimate was made from the record of contributions of materials placed in the drum; this was verified (and/or corrected) based on analyses of multiple scans of that drum. When the contents of a drum, as determined by successive scans, indicated a difference between the actual age of the waste and its assumed age, appropriate corrections were applied.

The accuracy of a waste-drum assay diminished significantly when the contents of the drum became large (>100 g of ^{233}U). If a drum was estimated to contain >36 g of ^{233}U, it was unpacked for redistribution in two or more drums for remeasurement (and for removal of any concentrated source for future recovery). The causes of reduced accuracy in assaying large quantities of waste were believed to be excessive extrapolation from the known standard (the extent of extrapolation could be reduced by using larger-size standards) and flooding of the detector crystals (lead shielding over the crystals would decrease flooding).

Periodically, the solid waste assay facility was tested for accuracy by measuring known quantities of ^{233}U in waste drums. This was accomplished using two or more known quantities ($\sim$25 g of UO_2 each) of uranium -- one for the known sample and the other(s) for the "unknown" quantity of waste -- in a standard calibrating drum. The results of these tests confirmed the system's reliability to estimate (within 15 to 20%) the uranium content of a waste drum which contained less than $\sim$100 g of uranium in waste of unknown age and ^{232}U content.

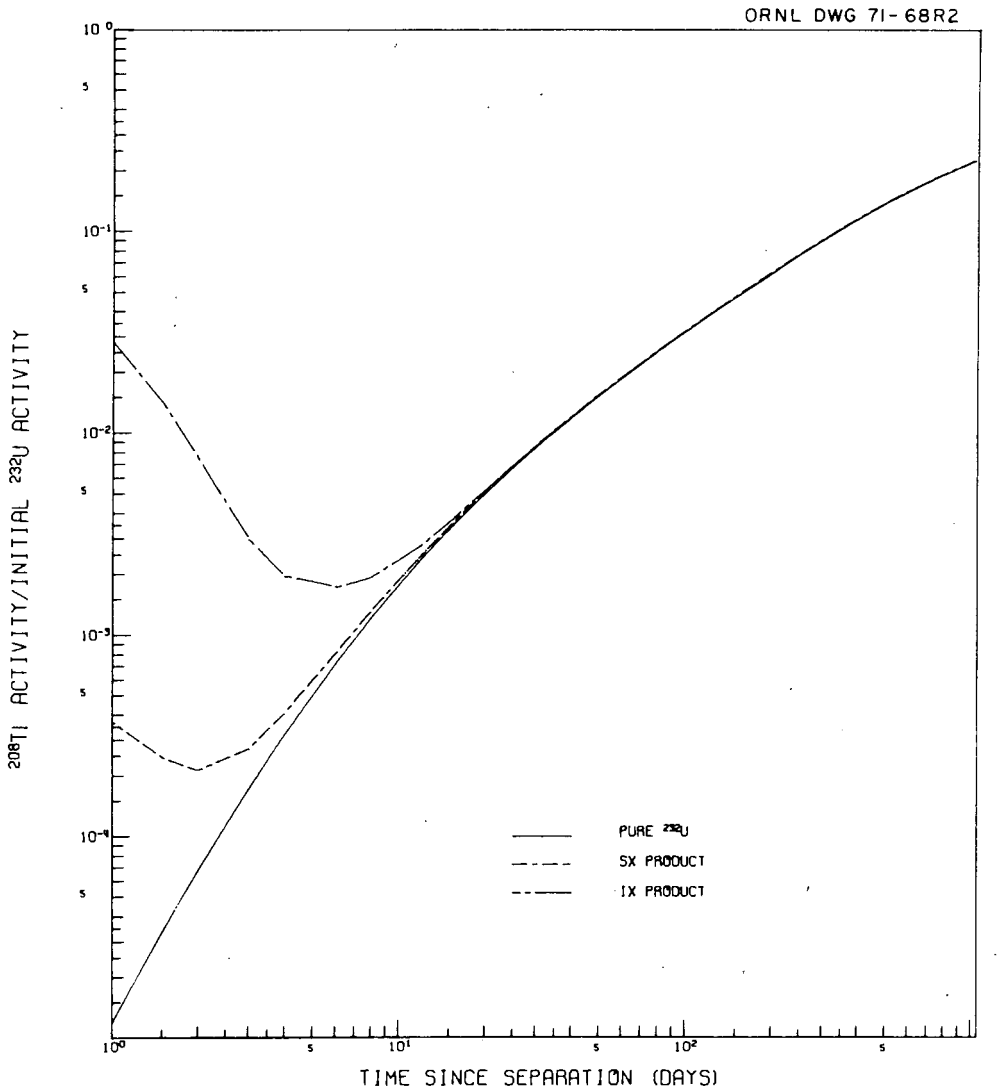

Fig. 9.2. Effect of postseparation time and type of separation on the radioactivity of ^{208}Tl per unit initial radioactivity of ^{232}U.

10. EQUIPMENT PERFORMANCE

10.1 Dissolvers

The capacity of the initial dissolution system (the $^{233}UO_2$ oxide dissolver) was insufficient to dissolve binary (UO_2-ThO_2) reject pellets at the required rate. A larger dissolver (described in Sect. 8.1) and a shielded manipulator-operated enclosure which contained can opening and pellet crushing equipment were designed and installed. Midway through the campaign, a third dissolver was installed for dissolution of ThO_2 pellets and for use as a backup unit for the pellet scrap dissolver. The ^{233}U oxide powder was solubilized in an existing dissolver that was used prior to this program.

10.1.1 Scrap pellet dissolver (S-20)

The dissolver, fabricated of 304L stainless steel, was constructed in accordance with rigid specifications in the ORNL shops. The unit utilizes the thermosiphon principle to achieve recirculation of the dissolvent by convection. The hot leg is a 12-ft section of 8-in. sched 40 pipe, the bottom 5 ft of which is heated by 12 ft^2 of steam jacket. The cold leg is a 10-ft section of 8-in. sched 40 pipe with a 24-in.-diam vapor head filled with borosilicate glass raschig rings. The two legs are connected at the bottom with a 1/1-2-in. recirculation pipe and at the top with a 3-in. pipe through which heated solution overflows into the cold leg. The vapor space at the top of the hot leg is vented through a 2-in. pipe into the vapor head of the cold leg. Figure 10.1 shows the dissolver as received from the shops prior to installation in the cells.

A 6-in.-diam perforated basket in the hot leg holds up to 200 kg of crushed pellets. A draft tube in the bottom of the leg increases recirculation around the basket, accelerating the dissolution rate of the pellets and keeping the fines in suspension. On one occasion when the air was turned off the draft tube before the solution was drained from the dissolver, the fines settled in the bottom, plugging both the bottom outlet line and the recirculation crossover line between the hot and cold legs. On other occasions after difficulty had been experienced with solids

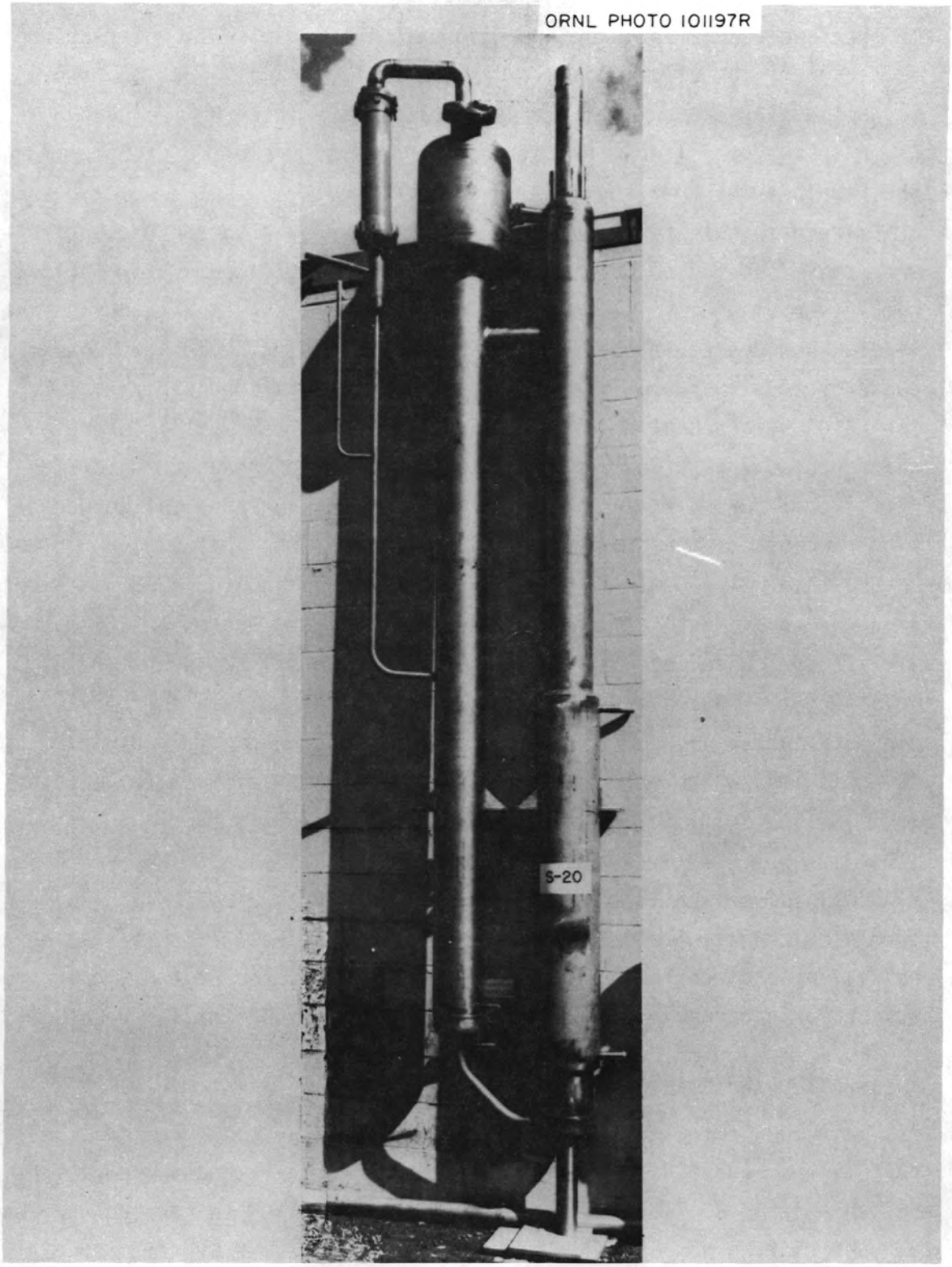

Fig. 10.1. Preinstallation photo of S-20.

in the feed adjustment tanks for the dissolver solutions, motor-driven filters were installed on the two solution withdrawal lines to remove any solids larger than 5 μ from the solutions. These units (Cuno Auto-Klean leaf-type filters) functioned without failure or maintenance for the remainder of the program.

The original 1/4-in. sched 40 density probes plugged frequently when the dissolver solution was cooled to ambient temperature following completion of a dissolution cycle, requiring cell entries to unplug the lines. New density probes of 3/8-in. sched 40 pipe, which lessened the tendency to plug, were installed to eliminate this condition.

A downdraft heat exchanger (15.5 ft^2, stainless steel) condenses the overhead vapors and returns the condensate to the cold leg of the dissolver. During this campaign, this item was replaced on two occasions because of the severe corrosive action of the acid vapors ($HF-HNO_3$) on the thin-wall (0.035-in.) condenser tubes. Also, the condensate return line was modified to eliminate the tendency of the noncondensable gases to airlift the condensate droplets into the vessel off-gas system (VOG); in addition, the return entry nozzle was raised to increase the hydraulic head available in order to permit condensate (low-density) drainage into the cold leg, which held solution having a density of ∿1.3 to 1.5.

10.1.2 Oxide powder dissolver (S-15)

This dissolver, described previously in Sect. 3.2.2 (Fig. 3.6), performed quite satisfactorily during the program. Relocation of the acid entry line from the vicinity of the VOG outlet to reduce the amount of acid vapor entering the VOG system was the only modification necessary.

10.1.3 Thorium oxide pellet dissolver (S-30)

The ThO_2 pellet dissolver is an exact duplicate of the scrap pellet dissolver (S-20), including all changes and modifications, except that (1) an additional 7-ft^2 heat exchanger was installed to reduce the amount of vapor in the noncondensable gases entering the VOG system, and (2) the heating area of the steam jacket was increased by 20%. The unit, built to the same rigid quality specifications as S-20, met all design criteria.

During the first series of dissolutions, a buildup of undissolved solids partially plugged both the outlet line and the recirculation line between the bottoms of the cold and hot legs. An air-driven vibrator was installed to prevent the fines from settling in the outlet line; a motorized stainless steel Cuno Auto-Klean leaf-type filter, which successfully removed all particles larger than 5 μ from the solution being withdrawn to the storage tanks, was also included.

10.1.4 Dissolver charging systems

The oxide powder dissolver (S-15) and the scrap pellet dissolver (S-20) are loaded from a single, shielded glove box stationed in the Penthouse directly above the dissolvers that are located in the processing cell. Two small Model G manipulators (Central Research Laboratories) are used to handle the materials and equipment inside the enclosure. The cans of oxide powder and scrap pellets were originally bagged into the box; later, a "sphincter valve" (described below) was installed to eliminate the troublesome bag-in operation. The powder-laden cans are opened remotely with a commercial type of can opener that has been modified for handling with manipulators. The powder is then dumped directly into the dissolver; however, the pellets must be crushed before being added. The chute to the appropriate dissolver is opened remotely from the control room, while the other chute remains locked, to prevent material from being charged to the wrong dissolver. Figures 3.6 and 8.1 show schematically the relationship of the two dissolvers and the charging box.

Dissolver charging box. The charging box is an all-welded enclosure, 54 in. wide x 43 in. deep x 62 in. high, fabricated of 12 gauge stainless steel sheet. It has a front viewing window of 1/4-in.-thick laminated safety plate glass and a side viewing window with two glove ports, which permit repairs and servicing of the equipment. The shielded side opposite the glove-ported window has a 6-in.-diam port for transferring empty cans and other smaller items into a smaller unshielded glove box containing a compactor for the cans and other compactible items; a bag-out port in this smaller box permits removal of noncompactible items and other waste materials. A 4-1/2-in.-diam port on the shielded side is equipped with a sphincter

valve for inserting the full cans into the box. The box is surrounded on three sides and the bottom with 4-in.-thick battleship armor plate for shielding. A 4-in.-thick lead glass viewing window, which is non-browning and nonhydroscopic, is mounted in the front plate to provide shielding for the operating personnel.

Manipulators. The Model G compact master-slave manipulators were manufactured by the Central Research Laboratories, Inc. Although undersized (limited head room above the charging box restricted the use of a heavier-duty manipulator) for the rugged service here, they were generally satisfactory. However, constant preventive maintenance and emergency repairs were necessary to keep them in operation. Broken tapes, the most frequent cause of failure, were replaced with braided stainless steel wire cables, reducing the frequency of repairs. The original manipulator slave fingers were modified so that they would open sufficiently wide to grip the scrap pellet cans. The slave-end ports were also booted with heavy plastic sleeves to permit withdrawal from the box for repairs. The plastic proved to be effective since we did not experience any release of radioactive material during the many times the manipulators were removed for repairs.

Can opener. The electric can opener was a commercially available unit (Model No. 266, the Edlund Company) that had been modified to facilitate operation with manipulators. The clamping action between the cutting wheel and the spur gear was insufficient to hold the can off the table so that the can could rotate. A revolving base plate with adjustable height to support the weight of the loaded can corrected this problem. An extension was added to the operating arm to facilitate operation by manipulators.

Pellet crusher. The pellet crusher, with overall dimensions of 17-1/4 in. long x 11-1/2 in. wide x 12-1/8 in. high, is a heavy-duty gyratory type manufactured by the Denver Equipment Company. It is a dual-belt-driven, 6-in.-size crusher capable of reducing 1/2-in. pellets to as fine as 10 mesh. Figure 10.2 shows the unit prior to modifications to the base. The base was mounted on casters, and the lower frame was enclosed with a

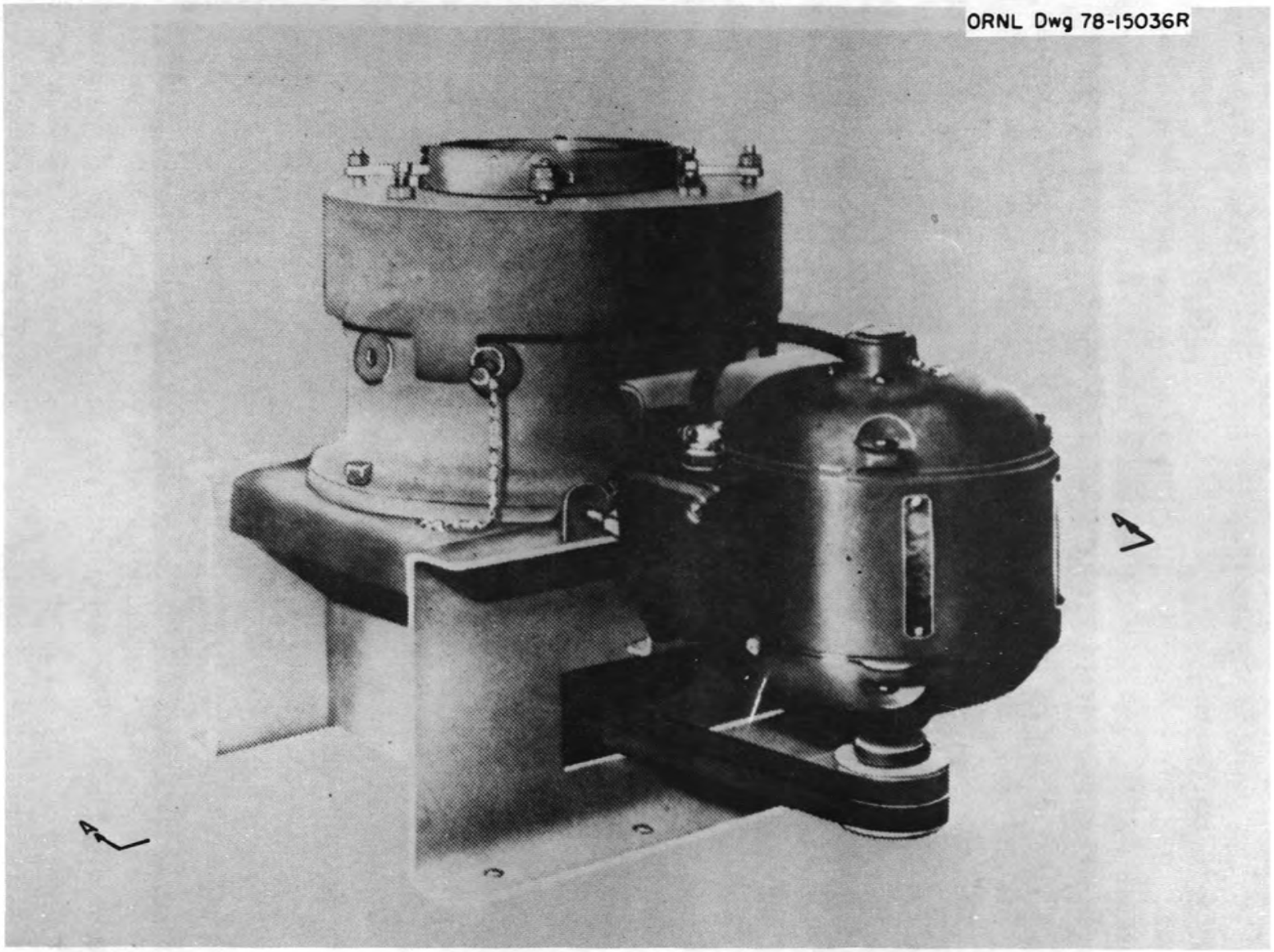

Fig. 10.2. Pellet crusher.

sheet metal shroud to minimize dusting and to direct the crushed pellets into the dissolver loading chute. Figure 10.3 is a cutaway view showing the modifications.

The crusher was adjusted initially during laboratory tests with thoria pellets which have dimensions different from those of the binary scrap pellets. After installation in the charging box, it was found that a large portion of the scrap pellets would not pass through the crusher and were thrown back out of the hopper into the charging box. This problem was corrected by increasing the clearance between the crushing mantle and the wear shell to crack the pellets into larger pieces. Fortunately, this adjustment effectively reduced the amount of dust and fines that accumulated in the box but did not noticeably affect the dissolution rate.

Even though the crusher is rugged and durable, some maintenance and repairs were necessary. Three holddown bolts loosened by vibration were replaced due to excessive thread damage. On several occasions, vibration caused shearing of the cap screw which held the crushing mantle to the muller head. On one occasion, a stray pellet became firmly lodged between the top drive belt and the sheave on the bottom end of the eccentric shaft. A special tool was fabricated to dislodge the pellet.

Midway of the campaign, the accumulation of dust and fines in the eccentric shaft bearing and the muller head thrust bearing (due to the failure of the seal ring) caused these items to wear excessively, resulting in a reduced capacity. Since it was impossible to replace these parts with the manipulators, the crusher was moved near the glove-ported window and spare parts were installed with gloved hands.

Ball valves. The loading chutes, which are fabricated of 4-in. sched 40 pipe, extend downward from the bottom of the charging box, through the cell roof, and into the perforated basket in the hot leg of the dissolver. Each chute has two 4-in. full-bore ball valves, located 18 in. apart, that form an enclosed chamber between them. This chamber functions as an airlock system to ensure containment during dissolver charging operations. The valves, which are WKM 4-in. fireproof DynaSeal, Type B112, with Teflon seats and seals, gave trouble-free service. However, they were more difficult to operate than anticipated because of their location beneath the

ORNL Dwg 78-15037

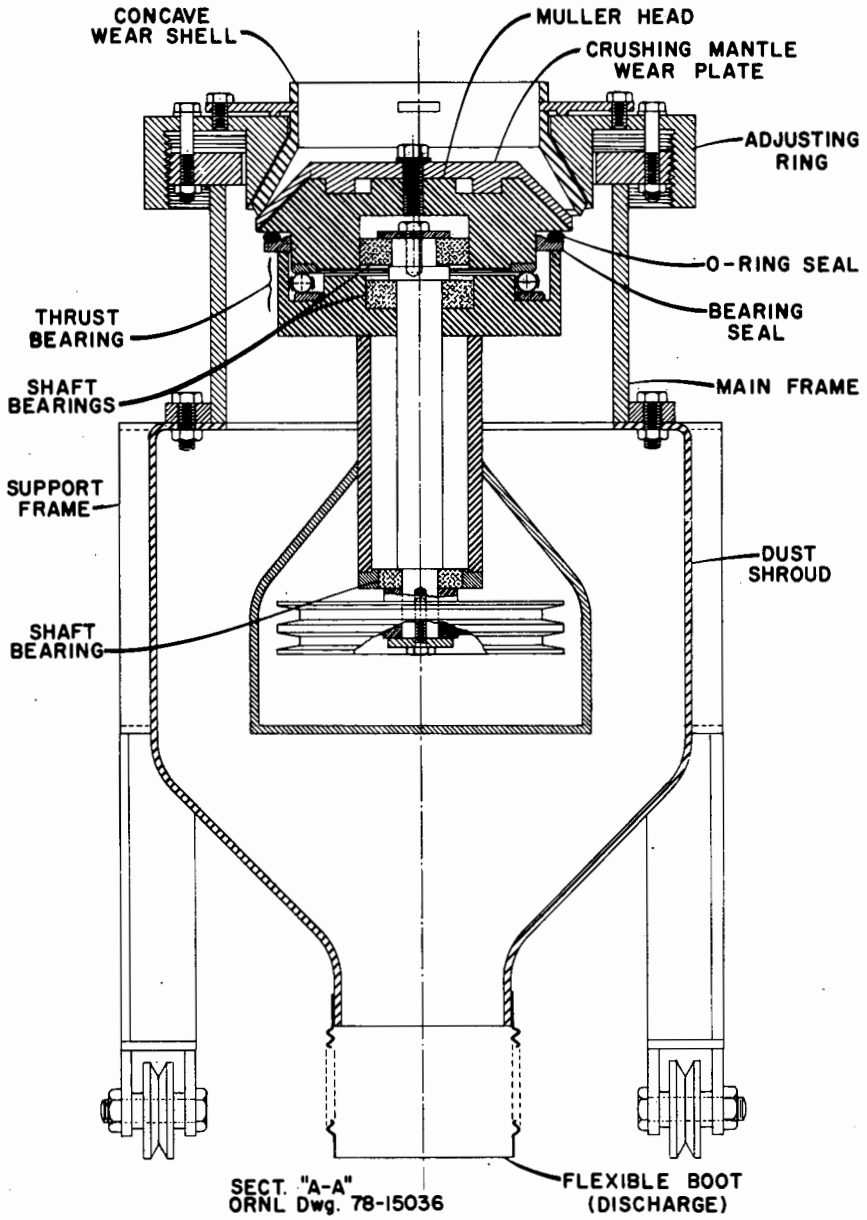

Fig. 10.3. Sectional view of modified pellet crusher.

dissolver charging box and because the Teflon seats would tend to "set" after remaining inoperable for a while. These conditions were overcome by adding an extension handle for increased leverage.

Sphincter valve. This special-purpose valve (Fig. 10.4) features a series of 1/16-in. clear plexiglass spacers. The neoprene gaskets, which have an inside diameter slightly smaller than that of the cans, form a series of seals around the can, maintaining containment as they are pushed into the box. This method not only eliminates the initial bag-in procedure (always a potential source of contamination) but also is easier and safer when performed by one person. The neoprene gaskets, although frayed after 3 years of service, were not replaced since they still maintained an adequate seal.

10.2 Purification Equipment

All uranyl nitrate solutions containing high acid concentrations and/or above-specification metallic impurities were processed successively through the existing solvent extraction equipment and the high-pressure ion exchange system that was installed for the LWBR Program. The existing equipment was upgraded prior to the beginning of this effort.

10.2.1 Solvent extraction

The solvent extraction system consists of a feed adjustment tank (S-2), a feed head tank (S-4), a metering pump (S-4-P), three pulse columns, two intercycle evaporators, two product catch tanks, several reagent head tanks, and various metering pumps. This equipment had given good, reliable service during previous long-term campaigns and was inspected thoroughly, serviced mechanically, and modified and/or replaced where necessary. All components performed satisfactorily during the LWBR Program.

Feed adjustment tank (S-2). This 1700-liter vessel, which has an inverted dish on the bottom, is equipped with accessories for mixing, sampling, and adjusting the solvent extraction feed solution. Accessories include pneumatic instrumentation for volume and density measurements, an air sparger for mixing, a sampling system, and steam transfer

ORNL Dwg 78-20408

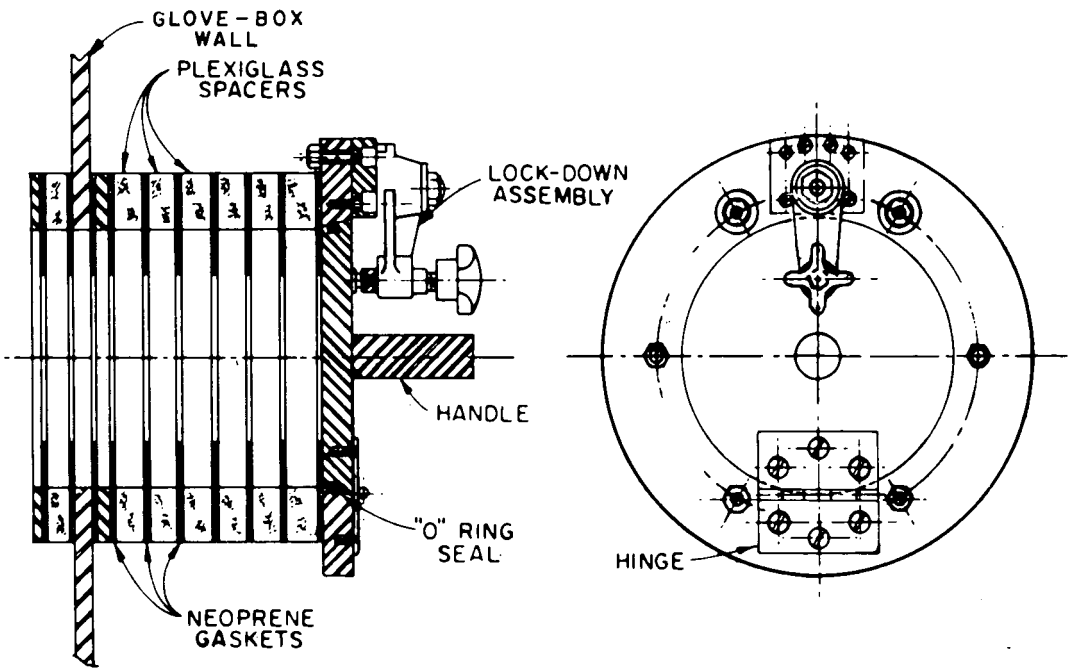

Fig. 10.4. Sphincter valve.

jets. All operational and maintenance problems encountered in this program were caused by the solids and fines that gradually accumulated in the bottom and plugged the sample uptake and return lines. These fines were made up of the insoluble fraction of scrap pellets that passed from the dissolver before a filter was installed to remove them. The 1/8-in. sched 40 sample lines were cut just above the top of the tank and the solids rodded out. After this operation had been repeated twice, new 3/8-in. sched 40 lines were installed in the tank so that the bottom of each was 6 in. above the level of the original probes. Following the campaign, a thorough cleanout of solids was made and the sample lines were lowered to their original depth in the tank.

Feed head tank (S-4). This 1200-liter vessel, located near the top of the processing cell, collected the solids that transferred from the feed adjustment tank. On one occasion, it became necessary to remove the solids from the line between the vessel and the feed pump.

Feed metering pump (S-4-P). Prior to the start of the program, the remote-head Lapp Pulsafeeder feed pump was replaced with a directly connected Lapp CPS-2AP metering pump. The latter pump, an oil-pulsed type, has a single Teflon diaphragm between the oil and the solvent extraction feed solution. Such an arrangement eliminated the difficulty of keeping two diaphragms in phase. The autopneumatic features of this model permits the pumping rate to be adjusted via remote means by regulating the pressure to an air cylinder that controls the length of piston travel.

The diaphragm ruptured once during the program due to the accumulation of fines at the bottom on the reagent side (that acted as a fulcrum on the flexing diaphragm). The ball-type check valve assembly was dismantled and cleaned twice when the fines restricted the pumping rate. A hand-operated, leaf-type filter capable of removing all solid particles of >5 μ was installed in the line near the pump suction to eliminate this problem. It was necessary for the filter to be cleaned twice during the program.

Pulse columns. Three pulse columns provide the extraction, scrubbing, and stripping phases of the solvent extraction purification steps. Although the 34-ft-long extraction column (N-1-A) had previously performed

both the extraction and scrubbing phases, initial test runs indicated that the length of the extraction section was insufficient to reduce uranium losses; as a result, the feed inlet was modified to utilize the entire 34 ft for extraction. Another column (P-1-M), which provided 12 ft of scrub section, was returned to service in order to achieve the necessary scrubbing action to remove the thorium to acceptable levels. This arrangement yielded a product of the desired purity, with acceptable losses.

Except for thorough cleaning and flushing to remove a gelatinous emulsion, these columns required no maintenance during the campaign.

Pulsers. Each pulse column is operated by a Model CPS-4 Pulsafeeder pump having a speed controller to regulate the pulse frequency. Basically, the pulsers are piston-type metering pumps without check valves. The three pulsers, which had been placed in service in 1954, had performed satisfactorily prior to this program; only routine preventive maintenance and minor repairs had been required.

Prior to startup, these pulsers were overhauled with spare parts or parts salvaged from idle equipment. During the campaign, repairs usually consisted of replacing ruptured diaphragms and either adjusting or replacing compensator and pressure relief valves. Routine maintenance involved replacing the oil in the depleted reservoirs and bleeding gas bubbles from the compression and reagent heads. Midway through the campaign, the failure of an irreplaceable thrust bearing in the extraction pulser gear box made it necessary to discard the pulser and replace it with one used previously in conjunction with the organic wash column. The reduction gears in the scrip column pulser jammed, causing failure of the electric motor. The motor and reduction gears were replaced with units salvaged from the original extraction column pulser.

Pumps. Most of the pumps in the solvent extraction facility had a history of reliable service during numerous previous programs, requiring only routine maintenance. Consequently, all pumps in the facility were inspected for worn and faulty parts and repaired or replaced prior to the LWBR Program to eliminate downtime.

Pumps of two basic types were used: positive displacement, and centrifugal. All metering pumps, with the exception of three centrifugal

intercycle process pumps, were of the positive displacement type. All transfer pumps were of the centrifugal type, except where negative suction head was required to transfer solution.

Centrifugal pumps. Seventeen centrifugal pumps handled the various process solutions in the purification systems. Sixteen of these were canned-rotor Chempumps, a type which combines the pump, motor, and seals in a leakproof stainless steel casing; the other was a Eco Centrichem pump. Eleven served as in-cell process intercycle and recirculation pumps, while six were used in solution makeup and transfer.

During the campaign, eight of the in-cell pumps failed and were replaced with spares. This approach was taken to decrease the time that maintenance personnel had to work in restrictive contamination clothing under adverse in-cell conditions. In each case, the principal cause of the failure was worn graphitar bearings, which allowed the rotor to come into contact with the stator housing and subsequently lead to electrical failure of the stator. Bearing failures usually occurred because small fines were present in the solution being pumped (which also lubricates the bearings) or because the pump was permitted to run dry. One batch of ion exchange product solution was contaminated with fine colloidal carbon particles from a worn bearing in a recirculating Chempump. Another pump failure was caused by the loosening of the impeller retaining nut, which permitted the impeller to rub the housing; this usually occurred when the pump was run in reverse. This situation was encountered on three occasions when shift electricians inadvertently switched electrical lead wires at the switch gear panel.

Positive displacement pumps. Four Lapp Pulsafeeder pumps and one Milton-Roy pump were used to meter feed and process solutions to the solvent extraction and ion exchange systems. The remote control features of the autopneumatic Lapp pump make it versatile and dependable for use in in-cell operations. The most frequent cause for repair was the presence of fine solids in the pumped solution, which prevented the positive seating of the ball-check valves. These fines also accumulated in the reagent head cavity of the pump, creating a fulcrum against which the diaphragm

was forced to flex and resulting in a rupture around the bottom periphery of the diaphragm. The extraction column feed pump required most of the maintenance for this reason.

The Milton-Roy pump (Model FR-131-A) with an oil-pulsed diaphragm was used to meter the elutriant solution to the ion exchange column. This small, compact pump performed satisfactorily, maintaining good, repetitive accuracy with varying solution heads. Only minimal maintenance and repairs were necessary. During the program, the ball-check valves were routinely cleaned twice and the oil was changed on one occasion when water seeped into the reservoir during a washdown of the area around the pump.

Sampler mechanism. The sampler conveyor drive mechanism that transports the sample bottles to and from the three sampler stations underwent extensive maintenance and repairs during a scheduled downtime of the solvent extraction system. Six broken idler gears and bearings and the slip-friction drive clutch were replaced, as were three excessively worn sections of the stainless steel drive chain. The tension of the spring mechanism was adjusted to maintain the proper slack in the drive chain. At each sample station, the alignment mechanism that positions the sample bottles under the sampler needles was readjusted.

The original Castle manipulator at the sample unloading station, made inoperable by a bent shaft, was replaced with a more flexible model. A severely corroded, mild-steel sampler bag-out glove box was replaced with one fabricated from stainless steel. The new model was designed to comply with the new safety standards for laminated safety plate glass as set forth by the ORNL Safety Committee.

It should be noted that the sampler system was installed in 1954 as a part of the Thorex process and has been in use since that time.

10.2.2 Ion exchange system

The ion exchange equipment originally consisted of two 115-liter stainless steel tanks that were salvaged and modified for use as elutriant waste and product catch tanks. Two new geometrically safe tanks were fabricated in the ORNL shops for use as an ion exchange feed makeup vessel

and as a collection storage tank. In addition, a Lapp feed metering pump, two ion exchange resin columns, and a scanner for measuring the gamma radiation of the resin column completed the system makeup. Figure 10.5 shows the cold-test mockup of the dual-column assembly for pressure drop measurements.

Resin columns. The original dual-column system performed satisfactorily when initially installed. However, after several runs, a gradual increase in pressure drop across the large column caused the porous resin-retaining stainless steel frit at the bottom to rupture, permitting resin to leak into the piping. Excessive pressure drop was attributed to compaction of the resin bed as a result of alternate expanding and contraction of the resin. This was further aggravated by the unidirectional flow of the aqueous uranium stream during both the loading and the elution operations. The column design was modified by installing a porous frit at the top of the column to permit reverse flow elution, which kept the resin bed partially fluidized during this portion of the operation. However, after the frits in the replacement columns had also failed under testing, inspection revealed that the frit had warped and possibly cracked due to the difference in thermal expansion properties which occurred during welding to the body. To ameliorate this problem, the column was redesigned to eliminate the need for welding the frit to the column body by supporting the frits at each end of the column with a perforated plate held in place by bolted flanges (Fig. 10.6). The dual-column system was abandoned in favor of a single column having 80% more resin than the combined total in the dual-column system. The single-column system performed satisfactorily, providing good decontamination from thorium and radioactive daughters of ^{232}U at lower pressure drops and at increased flow rates. No further frit failures occurred. Although the resin in the column could be replaced when its capacity and effectiveness decreased significantly, we found it to be more expedient and less expensive to remove the entire column and substitute one already filled with new resin.

Radiation scanner. The radiation scanner was designed and fabricated by the ORNL Instrumentation and Controls Division personnel for this specific program. Without it, the final product specifications would have

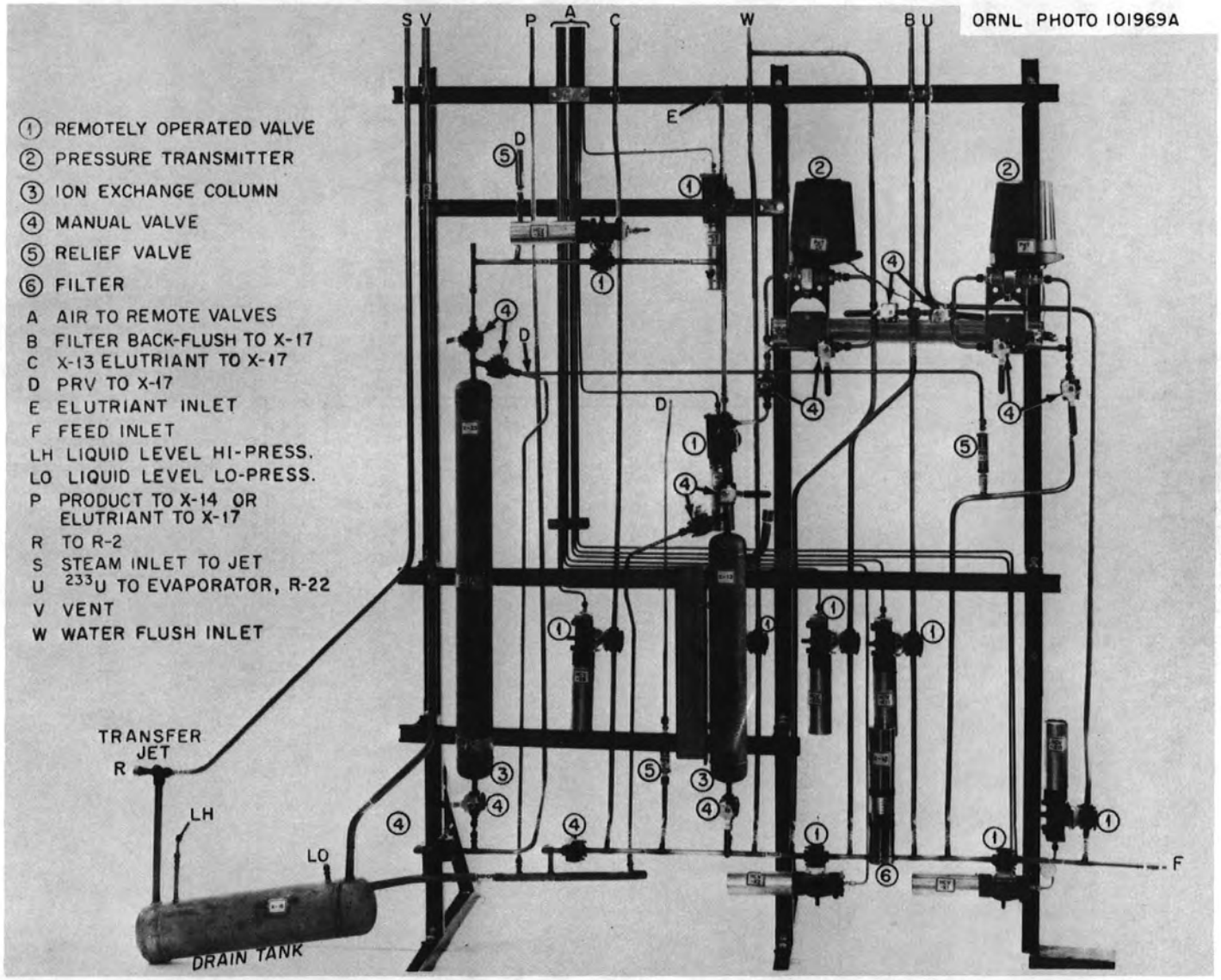

Fig. 10.5. Dual column ion exchange mockup assembly.

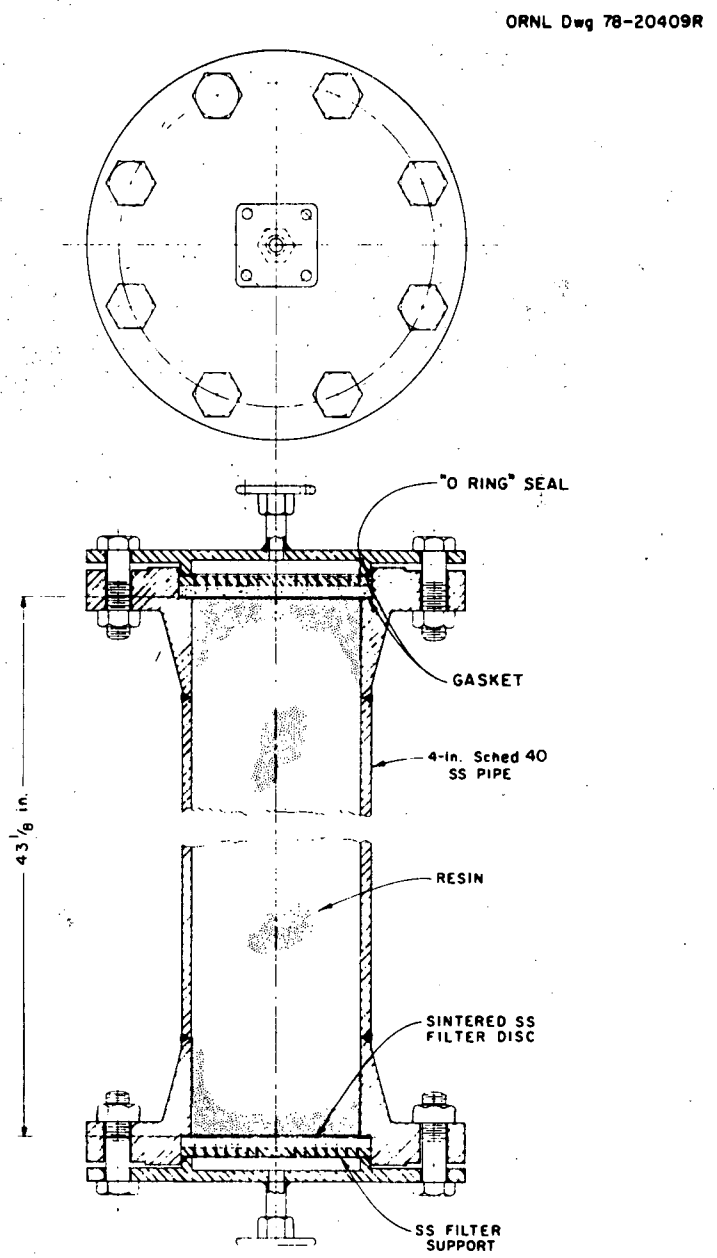

Fig. 10.6. Ion exchange resin column.

been difficult to achieve since the scanner continuously monitored the gamma activity in the resin column to accurately locate the thorium band. This permitted operating personnel to prevent the thorium contaminant from entering the product vessel.

The operation of the scanner exceeded our expectations; it functioned throughout the entire program without a mechanical failure or any maintenance or repairs. Figure 10.7 shows the instrument with the splash cover removed to reveal the G-M tube shield and the chain drive mechanism. The gamma ionization chamber sensitivity of 4×10^{-11} A R^{-1} hr^{-1} could measure gamma radiation ranging from 25 mR/hr to 10^6 R/hr. The tube was shielded from the background radiation in the cell by a 2-in.-thick lead shield. A 7/8-in. by 5-in. slot in the shield exposed the tube to the outer surface of the resin column, which was 3 in. away. The tube and shield, driven by a small reduction-geared 0.02-hp Bodine motor, traversed the effective resin bed length in the column. The length of travel and the speed were controlled remotely from the control panel. Travel of the scanner was limited by snap-action microswitches. A feedback-type electrometer measured the radiation level in the column. A record of the intensity was printed on a strip chart.

10.3 $^{233}UO_2$ Conversion Equipment

The uranium oxide conversion facility, built exclusively for the LWBR Program, is located in Room 502 of Bldg. 3019 at ORNL. Prior to this program, the room was divided into three laboratories in which experiments on coating of microspheres for reactor fuels were conducted. Preparatory to the LWBR Program, these facilities were moved to another site and the three laboratories were combined to house the oxide conversion equipment.

The existing ventilation system was considered to be inadequate to meet the requirements of the conversion equipment enclosures; therefore, it was replaced with a 3000-cfm alpha ventilation system, which was designed to maintain a high-volume flow of air at low pressures through the system at all times. This system was capable of maintaining a positive flow of air into an enclosure whenever containment was breached by

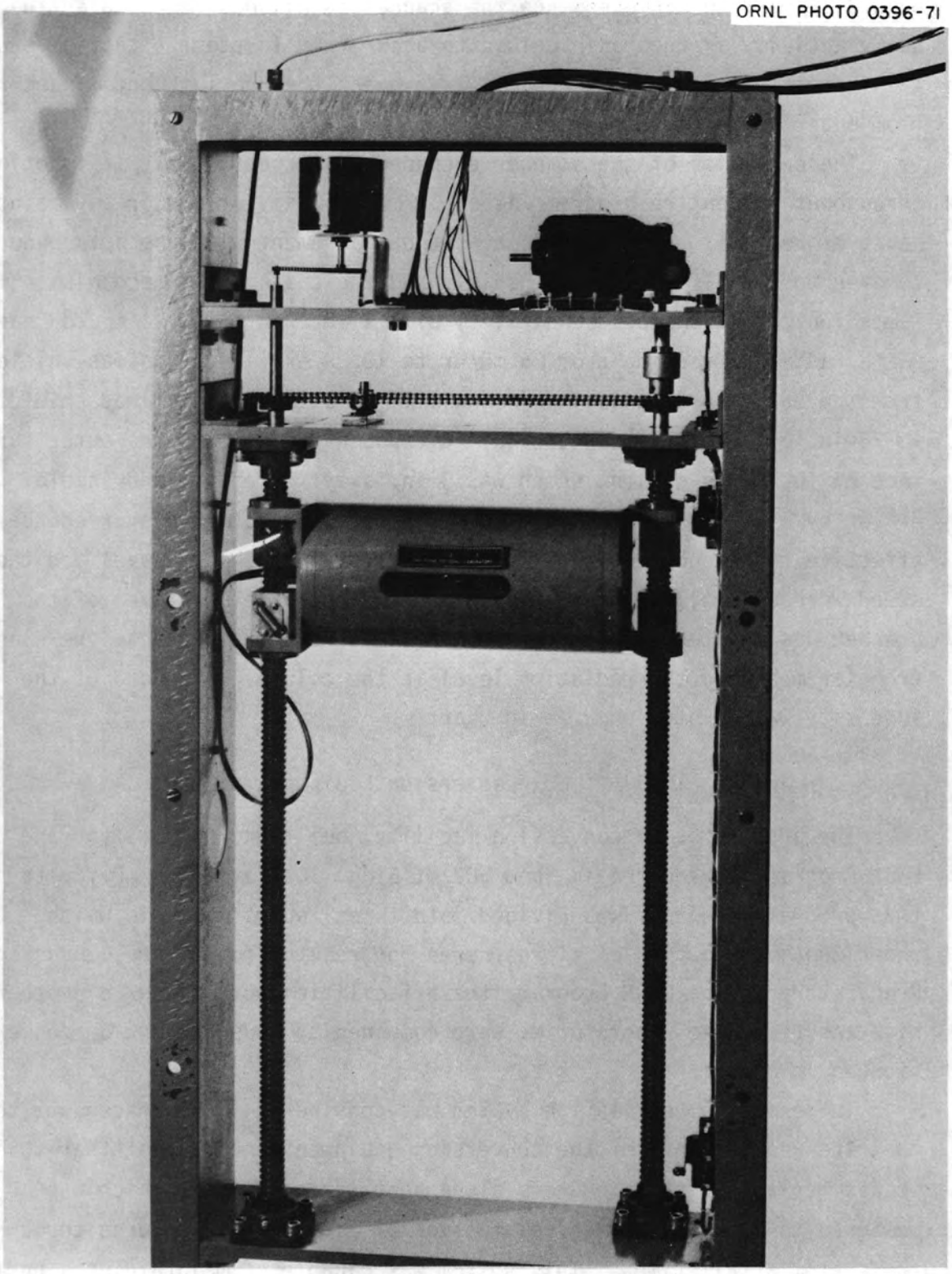

Fig. 10.7. Ion exchange resin bed radiation scanner.

the loss of one or more gloves or by a cracked glass. A relief device provided protection against excessive vacuum in the event the system should malfunction.

Equipment enclosures. The conversion equipment was housed in eight glove-ported stainless steel enclosures, individually designed to facilitate the operation and maintenance of one or more specific items of processing equipment. Each enclosure was vented through an absolute filter into the alpha ventilation system, and the pressure differential relative to the room was controlled with a hand-operated butterfly valve. Each enclosure was equipped with bag-out ports, and the six enclosures that handle solid materials were interconnected with pass-through ports. Absolute filters on the inlet ventilation nozzles prevented the release of contamination to the room in the event of a reversal in flow. The windows were 1/4-in. laminated safety plate glass; three of these were broken, and subsequently replaced, during the campaign. Cracks in a single layer of lamination were repaired by gluing 1/8-in.-thick pieces of glass over the crack.

Pumps. Eastern centrifugal pumps were used in the oxide conversion facility. A Model F-34C single-stage pump was used to recirculate and mix the anhydrous ammonia--UNH solution during the precipitation step and transfer the resulting slurry to the centrifuge. A Model 2F-34C two-stage pump was used to convey the aqueous waste solutions from the facility to the waste collection vessel in the solvent extraction system. The wetted surfaces of these two pumps were 316 stainless steel. These pumps performed quite satisfactorily, requiring no maintenance or repairs. At the end of the program, the single-stage pump was dismantled and examined (Fig. 10.8). Examination revealed that the impeller and its casing were in excellent condition, showing no sign of wear or corrosion.

Vacuum pumps. Two types of vacuum pumps were used to move process solutions throughout the conversion system. A Gast oil-less, sliding vane vacuum pump generated the vacuum for transferring solutions between vessels and enclosures in which wet-chemistry determinations were performed. It was selected for this service because oil fumes within the enclosure could not be tolerated. Initially, the pump was replaced after

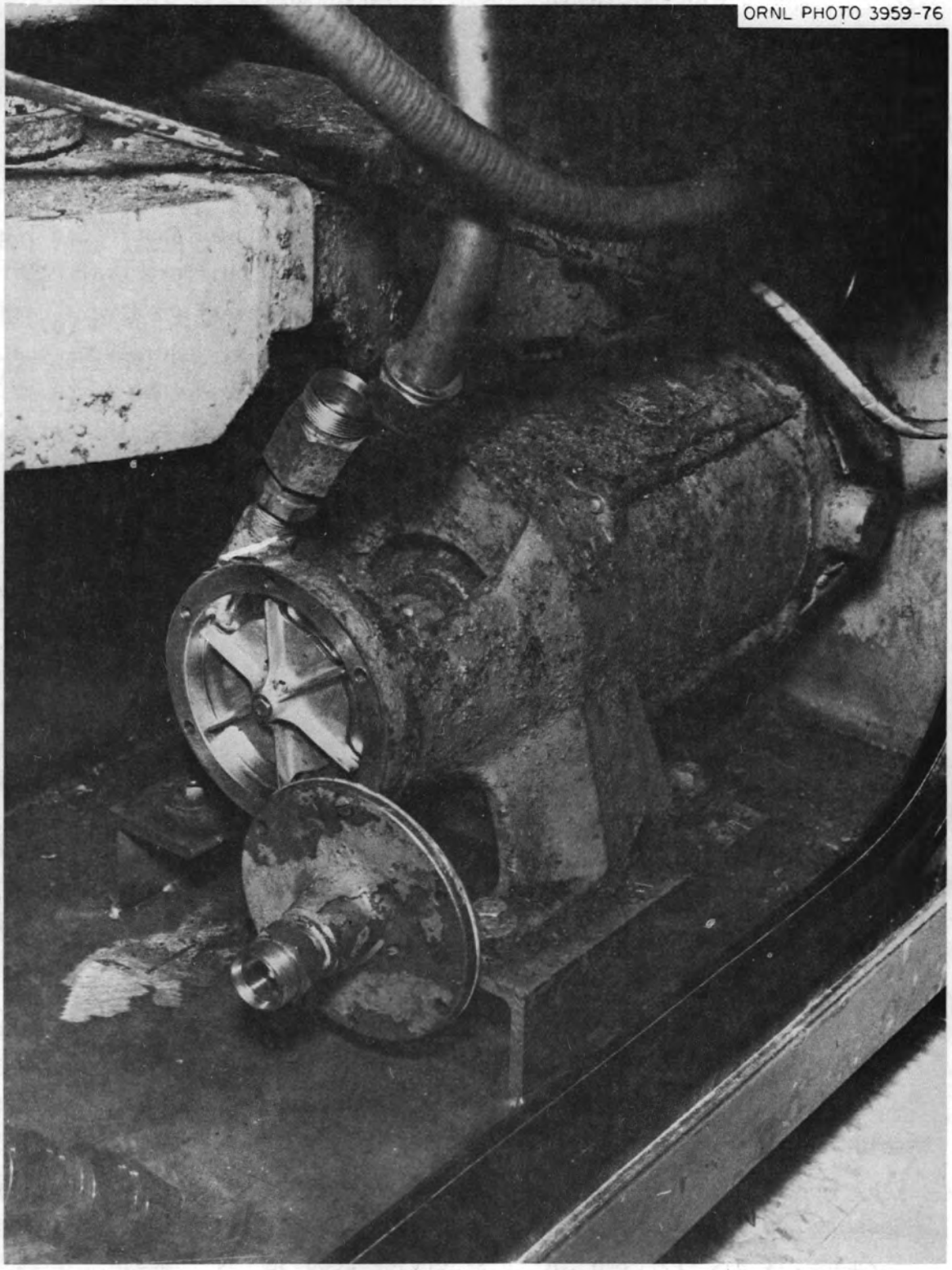

Fig. 10.8. UO_2 slurry recirculation pump.

production of approximately five lots of material due to corrosion of the vane guides and housing walls. A silica gel absorber, which was installed between the pump and the vacuum surge tank, reduced the frequency of replacement to an average of once every nine lots of material produced. The low cost of the pump made its replacement more economical than decontamination and repair.

Gases from the furnace enclosures were drawn through the hydrogen gas analyzers by Neptune "Dyna Vac" pumps. The small compact pump had an oscillating flexible diaphragm and a small disc in the inlet and discharge ports that functioned as check valves. These pumps were simple in construction and durable in operation. Originally, they came equipped with neoprene diaphragms, which cracked after 750 to 1000 hr of continuous service; after these had been replaced with Hypalon diaphragms, service in excess of 5000 hr was achieved.

Centrifuge. The centrifuge separated the solids from the liquid supernate prior to drying of the solids in the microwave oven. The Sharples Fletcher Mark I, Model 1PP-350 centrifuge was modified to meet the requirements of this program. The basket, made of stainless steel, was an open-top, solid-wall type with dimensions 12 in. diam x 5 in. deep. A force of 2100 x *g* in the basket was possible at a spindle speed of 3200 rpm; a speed-sensing and-transmitting tachometer indicated the rotating speed of the spindle.

Anticipating that the drive belt might need replacing sometime in the future, and realizing that a belt could not be placed around the spindle after the centrifuge was bolted down, we specified that spare belts be placed around the spindle and fastened out of the way of the casing before the centrifuge was installed in the enclosure. Fortunately, the original belt lasted until the cleanout phase of the campaign.

Most of the minor problems were associated with the safety circuitry that prevented startup of the centrifuge if the cover was not securely fastened. The microswitches were a constant source of trouble because the contact points corroded quickly in the enclosure atmosphere. After these switches had been replaced a number of times, they were abandoned since it was determined that they did not contribute to the safety of

the operation. The rpm sensor was damaged beyond repair and replaced. On one occasion when the enclosure was being washed down, the sensor proximity switch shorted out, causing the speed control transformer to burn out. The only routine maintenance required was lubrication of the motor and spindle every 6 months. This centrifuge was a durable and reliable piece of equipment.

Microwave dryer. The wet ADU precipitate was dried in the microwave oven with energy generated by the Reeves Electronic microwave generator. The operation of these two items is discussed in Sect. 5.3.1. A mechanical fixture was used to rotate the Teflon bowl in the oven to evenly distribute the energy absorbed by the powder. Figure 10.9 shows the original fixture with the Teflon beveled gears and a stainless steel shaft. We later replaced the stainless steel shaft with one fabricated of Teflon to reduce the friction drag.

At first, a few bowls and their contents were burned when the mechanism stopped turning. To alert the operating personnel to this problem, a motion detector was installed to actuate an alarm when the turntable stopped. A light detector was also installed in the oven to activate an alarm in case of fire in the bowl. Early in the program, the original drive unit burned out due to excessive friction between the gear unit and the motor support plate; thus, a spare drive unit was installed with sufficient clearance to eliminate the friction. The original turntable disc, which held the Teflon bowl in the oven, was replaced with one having a larger diameter to permit easier removal of the bowl. The filter in the oven exhaust system had to be replaced frequently due to the moisture content in the air. On two occasions, the vapor condenser tubes were cleaned to restore their original condensing efficiency; this treatment reduced the frequency of filter replacement and improved the off-gas flow through the oven. Finally, this problem was eliminated by changing the operating procedure (see Sect. 5.3.1).

The microwave generator transmitted energy into the oven through a 2- by 4-in. copper wave guide. The reflected energy (i.e., that portion not absorbed by the precipitate) traverses the same wave guide and is absorbed by the "dummy" load at the generator. At one point in the early

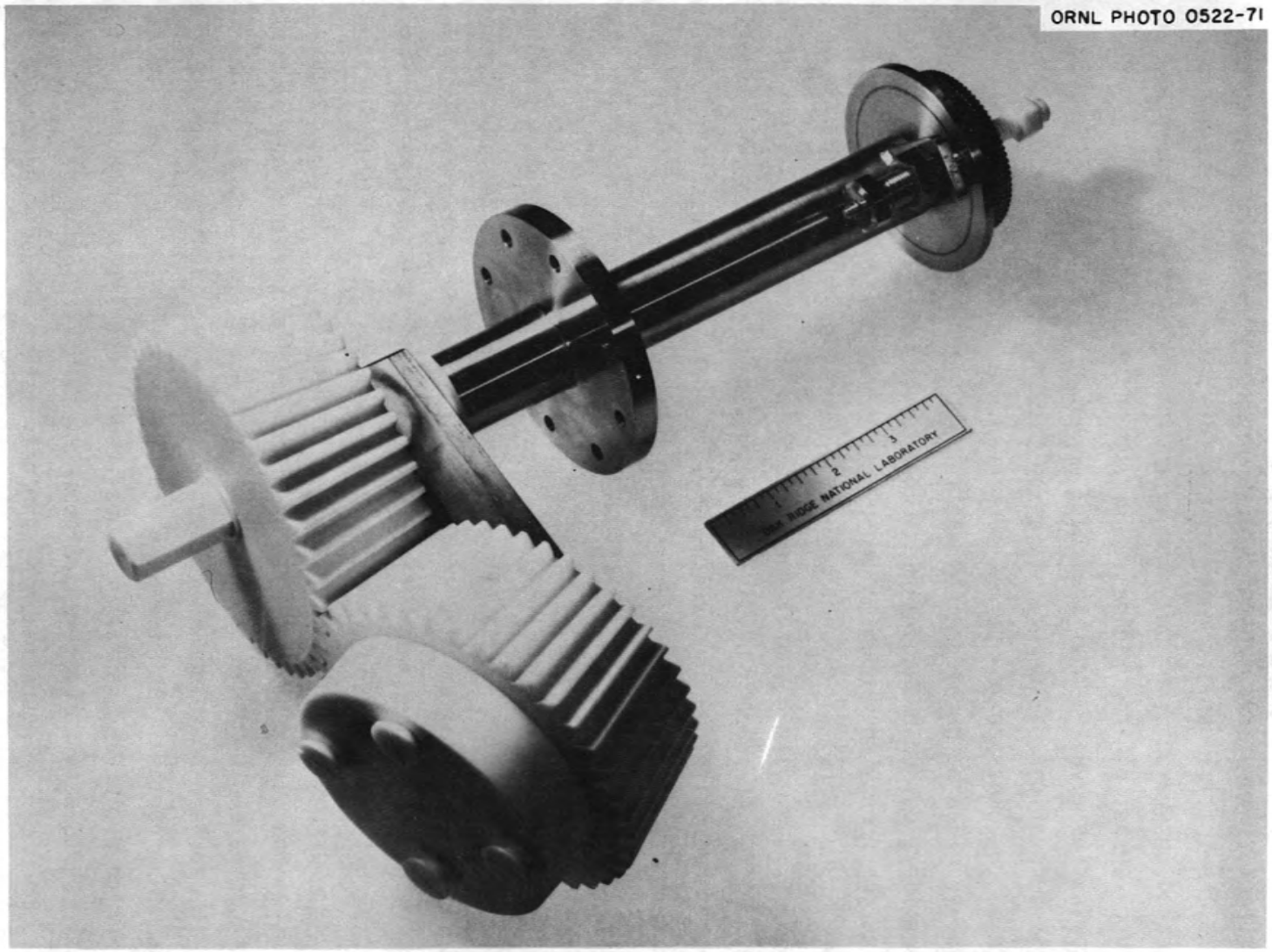

Fig. 10.9. Drive mechanism for Teflon bowl rotater in microwave oven.

phase of the program, the unit was inoperative for a week while the generator, magnetron tube, and the dummy load were shipped back to the factory and recalibrated.

The initial cooling water system for the magnetron tube was increased to prevent the tube from overheating. During the program, the energy output of the original magnetron began to gradually decrease. Examination revealed that the spare magnetron was faulty. Therefore, Instrumentation and Controls Division personnel adjusted and recalibrated the generator to permit continued use of the old tube until a new one could be obtained from the manufacturer. Also, the high-voltage rectifiers burned out and were replaced with components borrowed from another unit until new ones on order were received.

Granulators. The function of the two Erweka granulators is described in Sect. 5.3. These granulators were imported items for which spare parts were difficult to obtain. To ensure that a lack of spare parts would not delay production, we procured a complete spare unit and the few available spare parts stocked by the American Manufacturer's Agency. Near the end of the campaign, we were informed that spare parts were no longer available in this country.

The main source of difficulty was dust in the armature and brushes, since the motor was not totally enclosed. The brushes required frequent replacement due to wear and cracking. The molded plastic boot at the bottom outlet through which the powder flowed to the boat feeder was replaced three times; the boot on the product granulator was replaced twice. A routine shop schedule for fabricating the 35- and 100-mesh screens was set up to keep pace with the frequent replacement of the damaged screens. Midway through the program, the outer head mechanism of the furnace boat loading granulator became so tightly bound that it had to be replaced with the head from the spare unit. When a purchase order to replace the spare head was issued, the seller informed us that spare parts were no longer available in the United States.

Furnace. A description of the calcination furnace and a discussion of its function are included in Sect. 5.4. The furnace performed quite satisfactorily; however, considerable routine maintenance was necessary in order to meet the processing schedule and to prepare product of the desired quality.

Alignment baffles were placed at the entrance and exit to keep the boats in the center of the belt and to ensure that they entered the muffle without banging against the curtain or the sides. The take-up reel for the temperature-profile thermocouple was modified to allow the couple to be installed without disassembling the reel; a friction clutch was installed on the axle of the reel to prevent "freewheeling." Also, a special temperature recorder for the profile thermocouple was installed to permit more accurate adjustment of each heat zone to the proper temperature.

Instruments required a large portion of the maintenance and repairs associated with the furnace. The temperature of each zone was regulated by an Accutrol temperature controller and protected by a Protektall overheat-protection controller. Three extra units of each type provided continuity of service when a unit malfunctioned. During the program, six units were repaired and returned to service. The furnace off-gas flow rates and the dilution air flow rates were monitored by thermistor elements located in the headers, as well as by panel-mounted digital readout and alarm units. Occasionally, the readout units were sent to the instrument shop for service and repairs. Near the end of the program, two of the units could not be repaired because Eastech Corporation, the manufacturer, could no longer supply the special crystal element required by these units. The hydrogen and oxygen monitors needed frequent servicing, especially the room oxygen monitors that were battery-operated.

The off-gas venturi tubes tended to become partially plugged with dust from the loaded trays, decreasing the off-gas flow from the muffle and causing an increase of hydrogen concentration in the end boxes; this, in turn, would automatically shut off the hydrogen supply to the furnace. During the program, the venturi tubes were cleaned nine times by physically removing solids to restore normal hydrogen flow to the furnace. Each time, special precautions were taken and preparations were made to prevent the release of airborne contamination from the furnace muffle. Three broken glass windows were replaced during the program.

Stabilizer. The operation and the function of the stabilizer are discussed in Sect. 5.5.1. After the original design had been modified,

the stabilizer performed very well. During the startup and shakedown runs, the three factory-tuned Syntron vibrators were found to be out-of-phase and not vibrating at the same frequency; consequently, two of them were removed from service. Also, the tray was inclined at a steeper angle to achieve the desired flow characteristics of the powder. In addition, the product collection can was relocated for the reason discussed in Sect. 5.5.2.

Product blender. The V-shaped shielded blender, fabricated by the Patterson-Kelley Company, was a twin-shell type modified to meet the needs of this program. The V-shaped shells had 2 in. of lead shielding to reduce radiation exposure to personnel during the product handling procedures. Charging and discharging the blender were achieved by means of a 3-in.-diam full-ported ball valve at the bottom of the "V". Special primary and secondary seals protected the trunnion bearing from the dust.

The mechanical performance of the blender met all expectations. After initial tests, a pneumatically operated ball vibrator was attached to the side of the shell to enhance the uniformity of powder flow. Maintenance of the unit was minimal.

11. NUCLEAR SAFETY

The nuclear safety of the processing facilities is ensured, whenever possible, through the use of engineered systems of safe geometry, restricted volume, and fixed neutron poisons. However, we must rely on a procedural technique that includes restriction of both total fissile mass and fissile element concentrations and requires the presence of a soluble neutron absorber to provide nuclear safety in our solvent extraction head-end vessels. The nuclear safety analysis of the system array is documented in ref. 15. Operation of the system was reviewed and approved by the ORNL Criticality Safety Review and the Radioactive Operations Review Committees.

12. RADIATION EXPOSURES

Freshly purified $^{233}UO_2(NO_3)_2$ solutions exhibit low levels of radioactivity because the ^{232}U daughter content has been reduced. However, shortly after purification (4 to 6 days), the radiation level begins to

increase and continues to do so with time. Thus, it is seen that the potential for radiation exposure to operating personnel is directly dependent on the age (after purification) of the uranium material being processed or handled, provided the purification process was effective in removing the ^{232}U daughters. Since the purification processes were conducted remotely inside processing cells having 5-ft-thick concrete walls, the personnel exposure to radiation during these operations was quite low. On the other hand, the UO_2 conversion process was conducted in essentially unshielded equipment, resulting in radiation exposures of varying degrees depending on the age (after purification) of the uranium-bearing material being handled and the effectiveness of the purification process in removing the ^{232}U daughters.

12.1 Principal Sources

During processing, the uranium was usually handled without benefit of radiation shielding only throughout the first 2 weeks following purification. Exceptions to this were: (1) receiving and storing UO_3 from SRP and UNH solutions from ARHW at the beginning of the Program; (2) receiving and charging BAPL scrap to the dissolver; (3) storing product up to 45 days before shipment, or return for recycle, at the request of BAPL; (4) holding archive samples for at least 6 months before recycle; (5) recovery of powder from plugged off-gas filters; (6) semiannual sampling of stored solutions, and (7) dissolution of a portion of the original UO_3 that had been received from SRP 5 years earlier.

During some conversion runs, personnel were exposed to a higher-than-normal radiation background because the purification of the uranium by ion exchange had been less effective than usual. The higher radiation was caused by breakthrough of ^{224}Ra on the resin column, which resulted in relatively large amounts of ^{232}U daughters remaining with the uranium feed to the conversion system. The effect of this breakthrough became progressively severe as the uranium aged in storage. Ultimately, it was necessary to give the uranium a double ion exchange treatment in order to reduce the ^{232}U daughter level sufficiently to allow the conversion operations to be conducted without exceeding radiation dose restrictions.

12.2 Whole-Body Doses

Operating personnel received radiation exposures from handling aged UO_2 powder and UO_2-ThO_2 scrap received from BAPL, transferring and charging these materials to the dissolvers for uranium recovery, transferring and charging UO_3 that had been stored in the wells to the dissolver, sampling of aged uranyl nitrate solutions, converting purified uranyl nitrate solution to UO_2, and packaging $^{233}UO_2$ into drums for subsequent storage or shipment.

Personnel radiation exposures, plotted as a function of production rates, are shown in Fig. 12.1. Although a significant number of the total exposures could be attributed to the handling of aged recycle scrap from BAPL, the recycle rate also increased as the production rate increased; therefore, radiation exposures increased almost linearly with production rate once we began to produce significant quantities of material in FY 1974.

The increased exposure in FY 1976 can be attributed to the time spent in the conversion facility since the BAPL requirements dictated the need to operate the conversion facility on a 6-day-per-week basis to produce approximately 120 kg of UO_2 per month (see Table 12.1).

Radiation exposures to operating personnel were determined daily by using Victoreen-type pocket chambers. These data were compared with film badge results whenever a total of 300 mrem was indicated; comparisons were also made routinely at the end of each quarter.

The highest radiation exposure rate *for an individual* occurred during the third quarter of FY 1975. The maximum single exposures for a week and for the quarter were 185 and 1050 mrem respectively. These exposures resulted from handling ion exchange product which had a high ^{224}Ra content (with resulting high beta- and gamma-emitting decay daughters) in the conversion equipment. In addition, the BAPL scrap receipts were high; and 5-year-old UO_3 (from SRP) was being dissolved.

The highest average radiation exposure (124 mrem/week) *to all technicians* occurred during the third quarter of FY 1976. This was caused by the need to work a 6-day week for 4 months in order to complete the Program on schedule.

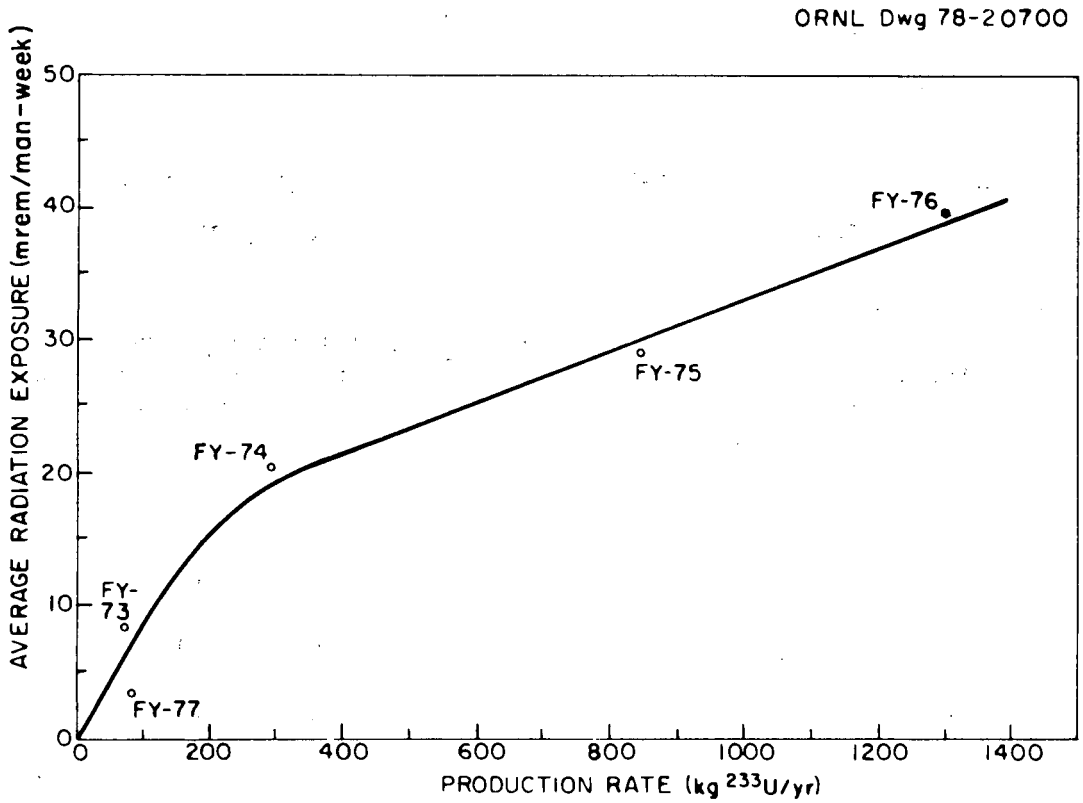

Fig. 12.1. Annual total radiation exposure to operating personnel during production of $^{233}UO_2$ and recovery of ^{233}U from scrap.

Table 12.1. Average weekly whole-body radiation exposures to operating personnel[a] (average per fiscal year)

Fiscal Year	Radiation exposures (mrem/week)	
	Average	Maximum per individual
1973	14	18
1974	22	27
1975	33	40
1976	41	49
1977 (first quarter)[b]	37	44

[a]Note: Recommended maximum dose per week = 100 mrem (ORNL Radiation Safety and Control Training Manual).

[b]Post-production; scrap recovery and equipment cleanout.

12.3 Hand Doses

Radiation doses to the hands of operating personnel were determined at various times throughout the Program. This procedure was considered necessary because the hands of the operating personnel were those parts of the body in closest contact with the radioactive material in carrying out glove-box operations, receiving drums of UO_2-ThO_2 scrap and transferring contents to the dissolver for recovery of uranium, and packaging and loading drums of UO_2 product onto trucks for delivery to storage or to BAPL.

Data on hand radiation exposure are summarized in Table 12.2.

13. ACKNOWLEDGMENTS

The authors wish to thank J. M. Leitnaker, of the Metals and Ceramics Division, for his invaluable work in determining the operating parameters and for his assistance during the early qualification operations. They also gratefully acknowledge the excellent design work by J. W. Snider, assisted by T. L. Douglass, which resulted in a facility that produced specification-grade powder without the benefit of preoperation with synthetic feed material.

The authors also wish to commend those members of the Analytical Chemistry Division, under the direction of C. E. Lamb, J. H. Cooper, and J. A. Carter, who were instrumental in developing numerous analytical procedures and conducting the thousands of analyses required. Their efforts were indispensable during the course of the program.

Perhaps the greatest contributions were made by the process supervisors and the engineering technicians who operated the plant over a 5-year period without an operating mishap. The process supervisors are as follows:

A. L. Beets
W. T. Bostic
F. L. Daley
T. L. Douglass
W. A. Lindsey
C. W. Martin
R. J. Shannon
W. A. Shannon
E. L. Youngblood

Table 12.2. Hand doses during the LWBR Program

	Radiation exposure to technicians[a] (mrem/week)	
	Average	Maximum
1973-1974 (FY 1974)	59	73
1974-1975 (FY 1975)	89	108
1975-1976 (FY 1976)	111	132
1976 (February-May)	122	151
1976 (third quarter)	100	119

[a]Measurements made with film rings at intervals showed a hands/whole-body ratio of 27. Recommended maximum dose = 1500 mrem/week (ORNL Radiation Safety and Control Training Manual).

The engineering technicians, who performed admirably, are as follows:

J. L. Anderson	A. L. Johnson	J. A. Roberts
C. W. Boatman	R. F. Kirk	M. E. Sands
E. C. Brantley	K. Ladd	O. W. Scates
J. H. Brock	J. F. Lockmiller	S. E. Shell
J. M. Butler	S. L. Rich	B. W. Starnes

R. W. Horton prepared the original safety analyses, and D. M. Helton, W. L. Pattison, R. E. Purkey, and W. M. Sproule performed the unenviable task of maintaining the accountability records during the program. We thank R. B. Waters, Engineering Draftsman, for his tireless efforts in preparing operating flowsheets and videotapes of lectures used during the training programs.

Sincere appreciation is expressed to C. H. Miller and his colleagues, all of whom are members of the Health Physics Division, for their diligence in monitoring the health and safety aspects of the facility and its operation.

Special thanks are due G. E. Pierce, R. P. Beard, and the capable skilled craftsmen of the Plant and Equipment Division for their invaluable assistance. Gratitude is also expressed to R. E. Toucey and his staff, primarily A. C. Tinley, of the Instrumentation and Controls Division, for their contributions in maintaining the accuracy and reliability of the process instrumentation. Without the tireless efforts of these personnel, the facility could not have operated as efficiently as it did.

14. REFERENCES

1. C. C. Haws et al., Summary of the Kilorod Project — A Semiremote 10-kg/day Demonstration of $^{233}UO_2$-ThO_2 Fuel-Element Fabrication by the ORNL Sol-Gel Vibratory-Compaction Method, ORNL-3681 (August 1965), pp. 7-15.
2. R. H. Rainey, Solvent Extraction Conditions for Recovering ^{233}U from Large Amounts of Thorium by Use of 5% DSBPP-DEB, ORNL-CF-71-6-15 (June 9, 1971).
3. C. A. Blake, Jr. et al., Comparison of Dialkyl Phenylphosphonates with Tri-n-Butyl Phosphate in Nitrate Systems: Extraction Properties, Stability, and Effect of Diluent on the Recovery of Uranium and Thorium from Spent Fuels, ORNL-3374 (January 1963), pp. 23-24.

4. J. P. Nichols, R. E. Brooksbank, and D. E. Ferguson, "Radiation Exposures in Fabricating ^{233}U-Th Fuels," Nucl. Appl. 1(2), 176-78 (April 1965).

5. R. H. Rainey, Laboratory Development of a Pressurized Cation Exchange Process for Removing the Daughters of ^{232}U from ^{233}U, ORNL-4731 (December 1972).

6. J. R. Parrott, LWBR Support Program: Process Outline for Converting ^{233}U from Nitrate Solution to Oxide Powder, ORNL-CF-73-3-26 (Mar. 21, 1973).

7. J. M. Leitnaker, M. L. Smith, and C. M. Fitzpatrick, Conversion of Uranium Nitrate to Ceramic-Grade Oxide for the Light Water Breeder Reactor: Process Development, ORNL-4755 (April 1972).

8. Material and Equipment Procurement Specifications and Standards (MEP): Uranium Dioxide Powder, MEP-CM-3309A (Aug. 6, 1973).

9. W. T. McDuffee, Quality Verification Plan: $^{233}UO_2$ Powder Fuel for the Light Water Breeder Reactor Program, ORNL-CF-73-4-1 (Apr. 4, 1973).

10. T. L. Hebble and W. T. McDuffee, Statistical Procedure for Evaluating $^{233}UO_2$ Powder for LWBR Fuel, ORNL-CF-74-3-35 (Apr. 18, 1974).

11. W. E. Lever and W. T. McDuffee, Statistical Procedure for Approximation of Confidence Limits for the Weight of Uranium in Shipments of $^{233}UO_2$ Powder, ORNL-CF-75-6-39 (June 10, 1975).

12. D. W. Magnuson and J. T. Thomas, "Criticality Analysis of U-233 Oxide in Waste Storage," ORNL internal correspondence to R. G. Affel, Mar. 29, 1976.

13. V. A. DeCarlo, Design of a System for the Nondestructive Assay of ^{233}U in Waste Drums, ORNL-TM-4249 (August 1973), pp. 2-5.

14. D. W. Magnuson, Quantitative Analysis for ^{233}U, Y-DR-55 (Mar. 30, 1971).

15. R. W. Horton, D. W. Magnuson, and W. T. McDuffee, Criticality Analysis: LWBR Assistance Program in Building 3019, ORNL-TM-3469 (March 1972).

15. APPENDIXES

15.1 Appendix A: Qualification Data for Finished $^{233}UO_2$ Powder Shipped to BAPL

The chemical and physical data obtained from inspection of several typical lots of $^{233}UO_2$ powder produced for shipment to BAPL are presented in Tables 15.1-15.5. These data represent lots produced early in the Program, about halfway through it, and near the end. Note that certain specification limits were changed (officially) as the Program progressed.

Table 15.1. Qualification data for UO_2 Powder Lot 105

Shipment No. 5
Shipment date 10/18/73
Purification date 10/04/73
Sample code LOP-105

	Specs.	Sample 1	Sample 2	Ave.	Cum.	Stat. limit
U conc., wt %	>86.5	87.49	87.70	87.59	87.30	86.66
^{232}U, parts per 10^6 parts U	<10.0	7.6	7.2	7.4	7.3	8.6
^{233}U, wt %	>97.0	98.250	98.250	98.250	98.175	97.671
^{234}U, wt %	<2.5	1.330	1.340	1.335	1.361	1.567
^{235}U, wt %	<0.5	0.110	0.110	0.110	0.140	0.346
^{236}U, wt %	<0.1	0.020	0.020	0.020	0.029	0.079
^{238}U, wt %	<0.5	0.280	0.280	0.280	0.293	0.364

Impurities, ppm UO_2

	Specs.	Sample 1	Sample 2	Ave.	Cum.	Poison equiv. Lot	Poison equiv. Cum.	Stat. limit
Al	200	230.0	230.0	230.0	227.4	2.3	2.3	
B	3	0.4	0.3	0.4	0.6	10.5	18.2	
C	500	7.0	3.0	5.0	14.9	0.0	0.0	
Ca	50	5.0	2.0	3.5	9.3	0.2	0.7	
Cl	a	5.0	5.0	5.0	9.3	6.0	11.1	
Br	a	<1.0	<1.0	<1.0	2.0	1.2	2.4	
Co	15	1.0	1.0	1.0	1.0	1.0	1.0	
Cr	100	10.0	10.0	10.0	10.5	0.7	0.7	
Cu	40	10.0	10.0	10.0	12.0	0.9	1.1	
F	30	<1.0	<1.0	<1.0	3.1	0.0	0.0	
Fe	400	100.0	80.0	90.0	96.9	5.4	5.8	
Hg	30	<1.0	<1.0	<1.0	0.6	1.1	0.7	
Mg	100	1.0	3.0	2.0	3.6	0.1	0.1	
Mn	20	4.0	3.0	3.5	3.2	1.2	1.1	
Mo	100	3.0	<1.0	<2.0	2.0	0.2	0.2	
N	50	21.0	21.0	21.0	15.7	2.3	1.7	
Ni	200	15.0	1.50	15.0	15.8	1.6	1.7	
P	150	360.0	360.0	360.0	301.5	10.8	9.0	
S	75	10.0	10.0	10.0	20.1	0.2	0.4	
Si	200	10.0	6.0	8.0	31.6	0.2	0.6	
Ti	20	<1.0	<1.0	<1.0	2.2	0.2	0.3	
Th	500	10.0	10.0	10.0	16.3	0.0	0.0	
V	50	<1.0	<1.0	<1.0	1.1	0.1	0.1	
^{239}Pu	25	5.0	5.0	5.0	3.3	0.0	0.0	
TNPE	<72					46.3	59.3	68.1

Supplementary data

	Specs.	Sample 1	Sample 2	Ave.	Cum.	Stat. limit
Photo	b	Accept	Accept	Accept		
Surface area, m^2/g	6	5.5	6.5	6.0	6.0	
Upper stat. limit	6+3					8.2
Lower stat. limit	6-2					3.8
O/M mole ratio	<2.18	2.05	2.05	2.05	2.06	2.07
Moisture, wt %	<0.5	0.29	0.29	0.29	0.30	0.39
Ave. particle size	<2.0	0.7	0.7	0.7	0.7	0.8
Porosity				.80		
Particle size dist.						
<50 μ	>96.0	100.0	99.4	99.7	99.4	
<10 μ	>90.0	94.4	95.0	94.7	95.4	
<2.5 μ	>50.0	64.8	68.4	66.6	66.3	
Proj. radiation, mR/hr from 500 g powder at 1 ft on 16th day	<7.5	7.5	7.5	7.5	5.2	8.7

[a] Cl+Br (max.), 25.

[b] Reject for any sample = reject for average.

Table 15.2. Qualification data for UO_2 Powder Lot 121

Shipment No. 21
Shipment date 08/07/74
Purification date 07/24/74
Sample code LOP-121

	Specs.	Sample 1	Sample 2	Ave.	Cum.	Stat. limit
U conc., wt %	>86.5	87.12	87.12	87.12	87.32	86.86
^{232}U, parts per 10^6 parts U	<10.0	8.0	7.4	7.7	7.6	9.2
^{233}U, wt %	>97.0	98.370	98.360	98.365	98.249	97.786
^{234}U, wt %	<2.5	1.281	1.282	1.282	1.328	1.615
^{235}U, wt %	<0.5	0.062	0.062	0.062	0.101	0.279
^{236}U, wt %	<0.1	0.011	0.012	0.012	0.024	0.082
^{238}U, wt %	<0.5	0.275	0.280	0.277	0.297	0.400

Impurities, ppm UO_2

	Specs.	Sample 1	Sample 2	Ave.	Cum.	Poison equiv. Lot	Poison equiv. Cum.	Stat. limit
Al	250	65.0	100.0	82.5	137.1	0.8	1.4	
B	3	0.5	0.3	0.4	0.5	12.0	14.8	
C	500	41.0	44.0	42.5	18.0	0.0	0.0	
Ca	50	10.0	5.0	7.5	7.2	0.5	0.5	
Cl	a	9.0	5.0	7.0	9.6	8.4	11.5	
Br	a	<0.7	<0.5	<0.6	1.4	0.7	1.7	
Co	15	<0.5	<0.5	<0.5	1.0	0.5	1.0	
Cr	100	20.0	10.0	15.0	9.7	1.0	0.7	
Cu	40	7.0	7.0	7.0	14.7	0.6	1.3	
F	30	<0.5	<0.5	<0.5	2.1	0.0	0.0	
Fe	400	130.0	120.0	125.0	112.2	7.5	6.7	
Hg	30	<0.5	<0.5	<0.5	0.8	0.6	0.9	
Mg	100	<1.0	<1.0	<1.0	2.2	0.0	0.1	
Mn	20	2.0	2.0	2.0	2.7	0.7	0.9	
Mo	100	2.0	1.0	1.5	2.1	0.2	0.2	
N	50	24.0	25.0	24.5	21.0	2.7	2.3	
Ni	200	20.0	20.0	20.0	14.8	2.2	1.6	
P	500	300.0	400.0	350.0	298.3	10.5	8.9	
S	75	10.0	10.0	10.0	21.0	0.2	0.4	
Si	200	15.0	20.0	17.5	34.9	0.3	0.7	
Ti	20	<2.0	<1.0	<1.5	1.9	0.2	0.3	
Th	500	<10.0	<10.0	<10.0	16.1	0.0	0.0	
V	50	<0.5	<0.5	<0.5	1.1	0.1	0.1	
^{239}Pu	25	<5.0	<5.0	<5.0	4.1	0.0	0.0	
TNPE	<72					49.8	56.2	60.8

Supplementary data

	Specs.	Sample 1	Sample 2	Ave.	Cum.	Stat. limit
Photo	b	Accept	Accept	Accept		
Surface area, m^2/g	6	6.1	6.5	6.3	6.0	
Upper stat. limit	6+3					8.6
Lower stat. limit	6-2					3.5
O/M mole ratio	<2.18	2.05	2.06	2.06	2.05	2.06
Moisture, wt %	<0.5	0.35	0.34	0.35	0.25	0.36
Ave. particle size	<2.0	0.5	0.5	0.5	0.6	0.8
Porosity				.80		
Particle size dist.						
<50 μ	>96.0	99.2	98.9	99.1	99.3	
<10 μ	>90.0	93.5	92.5	93.0	94.6	
<2.5 μ	>50.0	61.5	60.0	60.8	64.5	
Proj. radiation, mR/hr from 500 g powder at 1 ft on 16th day	<7.5	4.9	4.9	4.9	5.3	10.1

[a] Cl+Br (max.), 25.

[b] Reject for any sample = reject for average.

Table 15.3. Qualification data for UO_2 Powder Lot 153

Shipment No. 55
Shipment date 07/30/75
Purification date 07/02/75
Sample code LOP-153

	Specs.	Sample 1	Sample 2	Ave.	Cum.	Stat. limit
U conc., wt %	>86.5	87.26	87.32	87.29	87.31	86.95
^{232}U, parts per 10^6 parts U	<10.0	8.1	9.1	8.6	7.9	9.5
^{233}U, wt %	>97.0	98.350	98.360	98.355	98.319	97.976
^{234}U, wt %	<2.5	1.276	1.274	1.275	1.300	1.490
^{235}U, wt %	<0.5	0.068	0.065	0.067	0.078	0.201
^{236}U, wt %	<0.1	0.015	0.014	0.015	0.018	0.057
^{238}U, wt %	<0.5	0.291	0.289	0.290	0.285	0.372

Impurities, ppm UO_2

	Specs.	Sample 1	Sample 2	Ave.	Cum.	Poison equiv. Lot	Poison equiv. Cum.	Stat. limit
Al	250	100.0	100.0	100.0	145.5	1.0	1.5	
B	3	0.3	0.4	0.4	0.6	10.5	16.6	
C	500	7.0	6.0	6.5	18.0	0.0	0.0	
Ca	50	7.0	10.0	8.5	7.1	0.6	0.5	
Cl	a	12.0	20.0	16.0	10.8	19.2	13.0	
Br	a	<0.5	<0.5	<0.5	0.9	0.6	1.0	
Co	15	<0.1	<0.2	<0.2	0.6	0.2	0.6	
Cr	100	15.0	20.0	17.5	10.9	1.2	0.8	
Cu	40	2.0	3.0	2.5	9.5	0.2	0.9	
F	30	<0.5	<0.5	<0.5	1.2	0.0	0.0	
Fe	400	86.0	87.0	86.5	89.8	5.2	5.4	
Hg	30	<0.5	<0.5	<0.5	0.7	0.6	0.8	
Mg	100	5.0	4.0	4.5	2.4	0.1	0.1	
Mn	20	1.0	3.0	2.0	1.9	0.7	0.6	
Mo	100	<0.5	<1.0	<0.8	1.5	0.1	0.2	
N	50	2.0	14.0	8.0	22.0	0.9	2.4	
Ni	200	13.0	13.0	13.0	13.3	1.4	1.5	
P	500	80.0	105.0	92.5	249.9	2.8	7.5	
S	75	15.0	20.0	17.5	15.2	0.3	0.3	
Si	200	40.0	20.0	30.0	47.7	0.6	1.0	
Ti	20	≤1.0	≤2.0	≤1.5	1.2	0.2	0.2	
Th	500	≤15.0	≤15.0	≤15.0	12.4	0.0	0.0	
V	50	<0.2	<0.2	<0.2	0.6	0.0	0.1	
^{239}Pu	25	≤10.0	≤10.0	≤10.0	4.7	0.0	0.0	
TNPE	<72					46.4	54.7	57.4

Supplementary data

	Specs.	Sample 1	Sample 2	Ave.	Cum.	Stat. limit
Photo	b	Accept	Accept	Accept		
Surface area, m^2/g	6	5.3	5.1	5.2	5.8	
Upper stat. limit	6+3					8.6
Lower stat. limit	6-2					3.1
O/M mole ratio	<2.18	2.03	2.03	2.03	2.05	2.06
Moisture, wt %	<0.5	0.22	0.22	0.22	0.22	0.33
Ave. particle size	<2.0	1.0	0.9	0.9	0.7	1.0
Porosity				.75		
Particle size dist.						
<50 μ	>96.0	99.7	99.4	99.6	99.4	
<10 μ	>90.0	97.0	97.0	97.0	94.6	
<2.5 μ	>50.0	61.0	62.0	61.5	61.4	
Proj. radiation, mR/hr from 500 g powder at 1 ft on 16th day	<7.5	4.9	4.9	4.9	5.4	8.6

[a] Cl+Br (max.), 25.

[b] Reject for any sample = reject for average.

Table 15.4. Qualification data for UO_2 Powder Lot 161

Shipment No. 66
Shipment date 10/15/75
Purification date 09/17/75
Sample code LOP-161

	Specs.	Sample 1	Sample 2	Ave.	Cum.	Stat. limit
U conc., wt %	>86.5	86.92	87.11	87.02	87.30	86.93
^{232}U, parts per 10^6 parts U	<10.0	7.9	8.9	8.4	7.8	9.6
^{233}U, wt %	>97.0	98.400	98.400	98.400	98.316	97.955
^{234}U, wt %	<2.5	1.281	1.283	1.282	1.304	1.509
^{235}U, wt %	<0.5	0.060	0.060	0.060	0.080	0.208
^{236}U, wt %	<0.1	0.014	0.013	0.014	0.019	0.062
^{238}U, wt %	<0.5	0.249	0.249	0.249	0.281	0.367

Impurities, ppm UO_2

	Specs.	Sample 1	Sample 2	Ave.	Cum.	Poison equiv. Lot	Poison equiv. Cum.	Stat. limit
Al	250	70.0	68.0	69.0	138.2	0.7	1.4	
B	3	0.7	0.8	0.8	0.5	22.5	16.0	
C	500	20.0	21.0	20.5	19.0	0.0	0.0	
Ca	50	7.0	7.0	7.0	7.1	0.5	0.5	
Cl	a	10.0	6.0	8.0	10.9	9.6	13.1	
Br	a	<0.5	<0.3	<0.4	0.8	0.5	1.0	
Co	15	<0.1	<0.3	<0.2	0.5	0.2	0.5	
Cr	100	10.0	12.0	11.0	11.0	0.8	0.8	
Cu	40	2.0	1.0	1.5	8.5	0.1	0.8	
F	30	0.5	0.7	0.6	1.2	0.0	0.0	
Fe	400	135.0	125.0	130.0	94.0	7.8	5.6	
Hg	30	<0.5	<0.5	<0.5	0.7	0.6	0.7	
Mg	100	0.5	1.0	0.8	2.2	0.0	0.1	
Mn	20	2.0	1.0	1.5	1.9	0.5	0.6	
Mo	100	≤1.0	<0.5	<0.8	1.4	0.1	0.2	
N	50	<5.0	<5.0	<5.0	22.2	0.5	2.4	
Ni	200	15.0	15.0	15.0	13.0	1.6	1.4	
P	500	265.0	285.0	275.0	234.5	8.3	7.0	
S	75	10.0	10.0	10.0	15.2	0.2	0.3	
Si	200	20.0	25.0	22.5	44.8	0.4	0.9	
Ti	20	≤1.0	≤1.0	≤1.0	1.1	0.2	0.2	
Th	500	<10.0	<10.0	<10.0	12.1	0.0	0.0	
V	50	<0.2	<0.1	<0.2	0.5	0.0	0.1	
^{239}Pu	25	<5.0	<5.0	<5.0	4.8	0.0	0.0	
TNPE	72					55.1	53.6	56.1

Supplementary data

	Specs.	Sample 1	Sample 2	Ave.	Cum.	Stat. limit
Photo	b	Accept	Accept	Accept		
Surface area, m^2/g	6	6.2	6.0	6.1	5.7	
Upper stat. limit	6+3					8.4
Lower stat. limit	6-2					3.0
O/M mole ratio	<2.18	2.04	2.05	2.05	2.05	2.06
Moisture, wt %	<0.5	0.19	0.18	0.19	0.22	0.32
Ave. particle size	<2.0	0.8	0.8	0.8	0.7	1.0
Porosity				.75		
Particle size dist.						
<50 μ	>96.0	99.7	99.6	99.7	99.5	
<10 μ	>90.0	94.5	94.0	94.3	94.8	
<2.5 μ	>50.0	59.4	60.0	59.7	61.3	
Proj. radiation mR/hr from 500 g powder at 1 ft on 16th day	<7.5	6.0	6.0	6.0	5.3	8.3
Proj. radiation mR/hr from 400 g powder at 1 ft on 29th day	<13.3			8.2		

[a]Cl+Br (max.), 25.

[b]Reject for any sample = reject for average.

Table 15.5. Qualification data for UO_2 Powder Lot 181

Shipment No. 89
Shipment date 04/07/76
Purification date 03/25/76
Sample code LOP-181

	Specs.	Sample 1	Sample 2	Ave.	Cum.	Stat. limit
U conc., wt %	>86.5	87.34	87.35	87.34	87.31	86.95
^{232}U, parts per 10^6 parts U	<10.0	6.0	6.9	6.4	7.7	9.6
^{233}U, wt %	>97.0	98.070	98.070	98.070	98.277	97.893
^{234}U, wt %	<2.5	1.161	1.163	1.162	1.310	1.559
^{235}U, wt %	<0.5	0.073	0.072	0.072	0.088	0.217
^{236}U, wt %	<0.1	0.019	0.019	0.019	0.023	0.070
^{238}U, wt %	<1.25	0.681	0.679	0.680	0.302	0.594

Impurities, ppm UO_2

	Specs.	Sample 1	Sample 2	Ave.	Cum.	Poison equiv. Lot	Poison equiv. Cum.	Stat. limit
Al	250	42.5	42.5	42.5	120.3	0.4	1.2	
B	3	1.1	1.2	1.2	0.6	34.5	17.7	
C	500	13.0	15.0	14.0	18.9	0.0	0.0	
Ca	50	7.0	7.0	7.0	7.2	0.5	0.5	
Cl	a	15.0	25.0	20.0	11.8	24.0	14.1	
Br	a	≤1.0	≤1.0	≤1.0	0.8	1.2	1.0	
Co	15	<0.3	<0.3	<0.3	0.5	0.3	0.5	
Cr	100	10.0	10.0	10.0	10.7	0.7	0.7	
Cu	40	≤1.0	≤0.5	≤0.8	6.2	0.1	0.6	
F	30	3.0	3.0	3.0	1.8	0.0	0.0	
Fe	400	77.0	76.0	76.5	94.5	4.6	5.7	
Hg	30	<0.5	<0.5	<0.5	0.6	0.6	0.7	
Mg	100	1.0	3.0	2.0	1.8	0.1	0.1	
Mn	20	2.0	2.0	2.0	1.7	0.7	0.6	
Mo	100	≤2.0	≤1.0	≤1.5	1.5	0.2	0.2	
N	50	18.0	18.0	18.0	20.7	2.0	2.3	
Ni	200	13.0	15.0	14.0	12.6	1.5	1.4	
P	500	260.0	250.0	255.0	209.8	7.7	6.3	
S	75	25.0	30.0	27.5	17.3	0.5	0.3	
Si	200	30.0	40.0	35.0	41.5	0.7	0.8	
Ti	20	≤2.0	≤2.0	≤2.0	1.2	0.3	0.2	
Th	500	<10.0	<10.0	10.0	11.9	0.0	0.0	
V	50	<0.3	<0.3	<0.3	0.5	0.0	0.1	
^{239}Pu	25	<5.0	<5.0	<5.0	5.1	0.0	0.0	
TNPE	<72					80.5	54.9	57.3

Supplementary data

	Specs.	Sample 1	Sample 2	Ave.	Cum.	Stat. limit
Photo	b	Accept	Accept	Accept		
Surface area, m^2/g	6	5.5	5.7	5.6	5.6	
Upper stat. limit	6+3					8.1
Lower stat. limit	6-2					3.1
O/M mole ratio	<2.18	2.04	2.04	2.04	2.04	2.06
Moisture, wt %	<0.5	0.20	0.20	0.20	0.20	0.31
Ave. particle size	<2.0	0.7	0.7	0.7	0.7	1.0
Porosity				.79		
Particle size dist.						
<50 μ	>96.0	99.6	99.5	99.6	99.5	
<10 μ	>90.0	94.7	94.8	94.8	95.0	
<2.5 μ	>50.0	58.3	58.0	58.2	60.5	
Proj. radiation mR/hr from 500 g powder at 1 ft on 16th day	<7.5	3.7	3.7	3.7	5.0	7.7

[a]Cl+Br (max.), 25.

[b]Reject for any sample = reject for average.

15.2 Appendix B: Photographs of Conversion Equipment

ORNL Photo No.	Title	
2584-72	Fig. 15.1.	Liquid metering enclosure.
2583-72	Fig. 15.2.	Precipitation and centrifugation enclosure.
2588-72	Fig. 15.3.	Microwave drying enclosure.
2078-72	Fig. 15.4.	Calcining furnace.
2586-72	Fig. 15.5.	Powder stabilizing enclosure.
2585-72	Fig. 15.6.	Powder blending and load-out enclosure.

Fig. 15.1. Liquid metering enclosure.

Fig. 15.2. Precipitation and centrifugation enclosure.

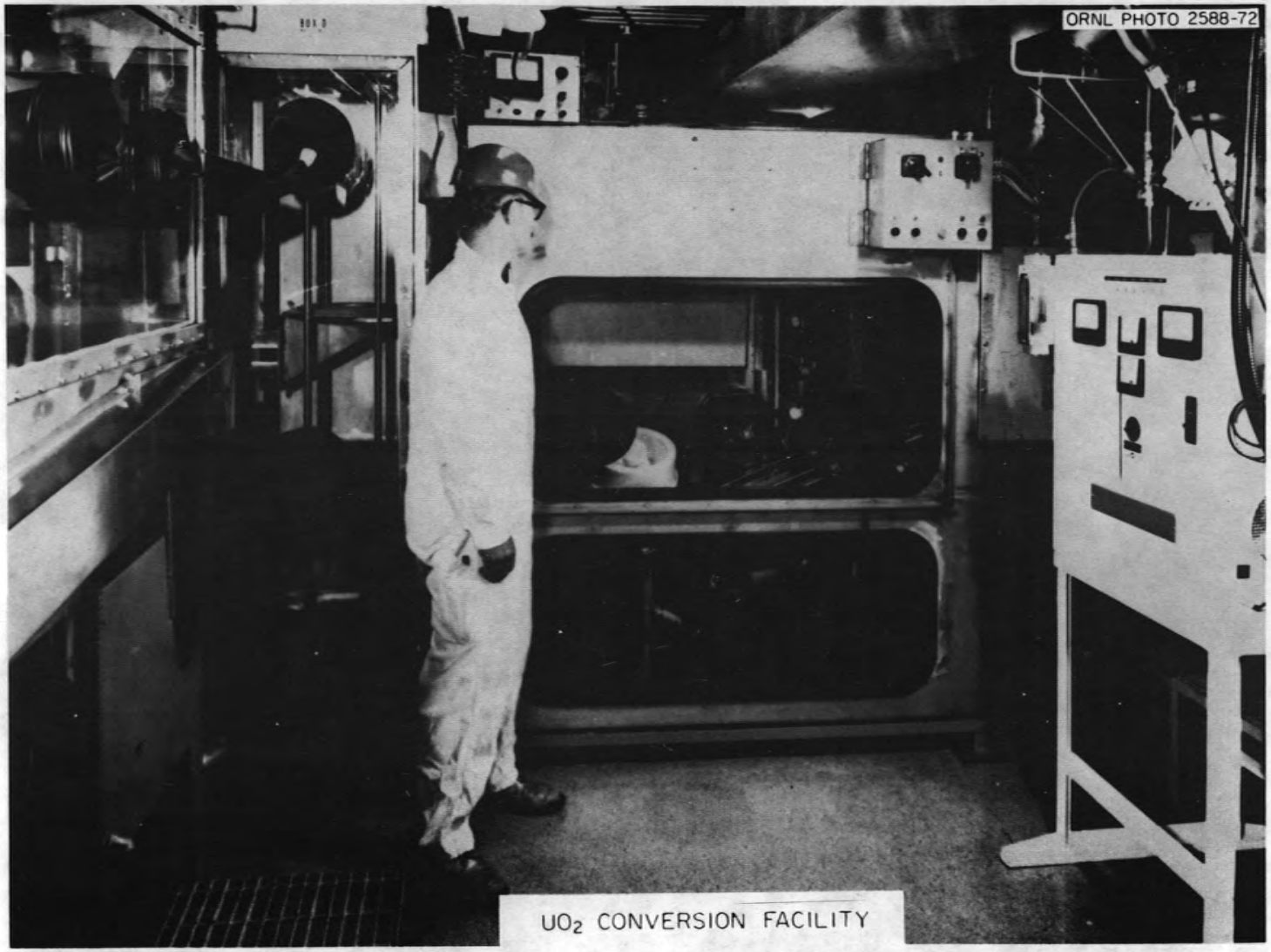

Fig. 15.3. Microwave drying enclosure.

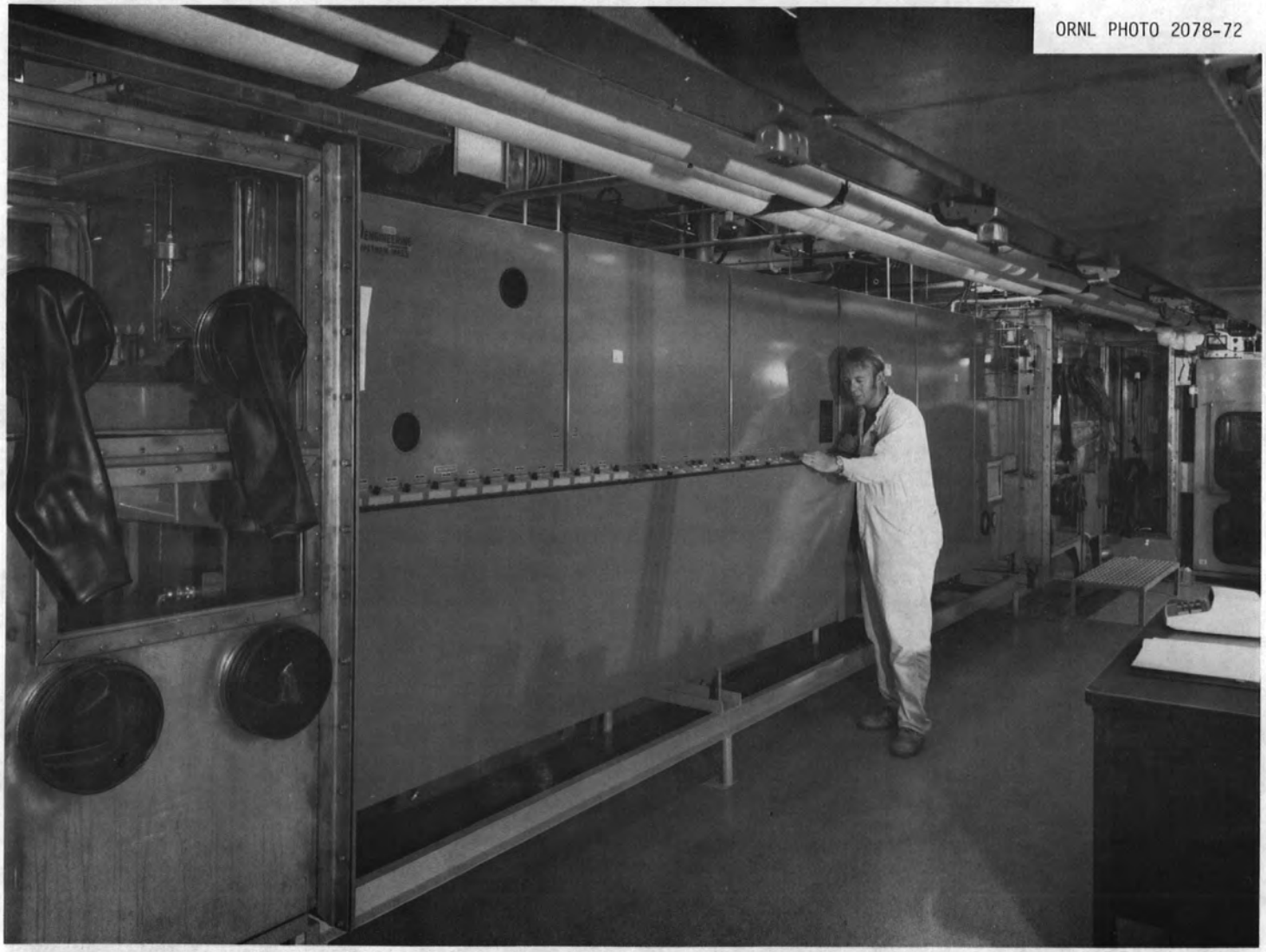

Fig. 15.4. Calcining furnace.

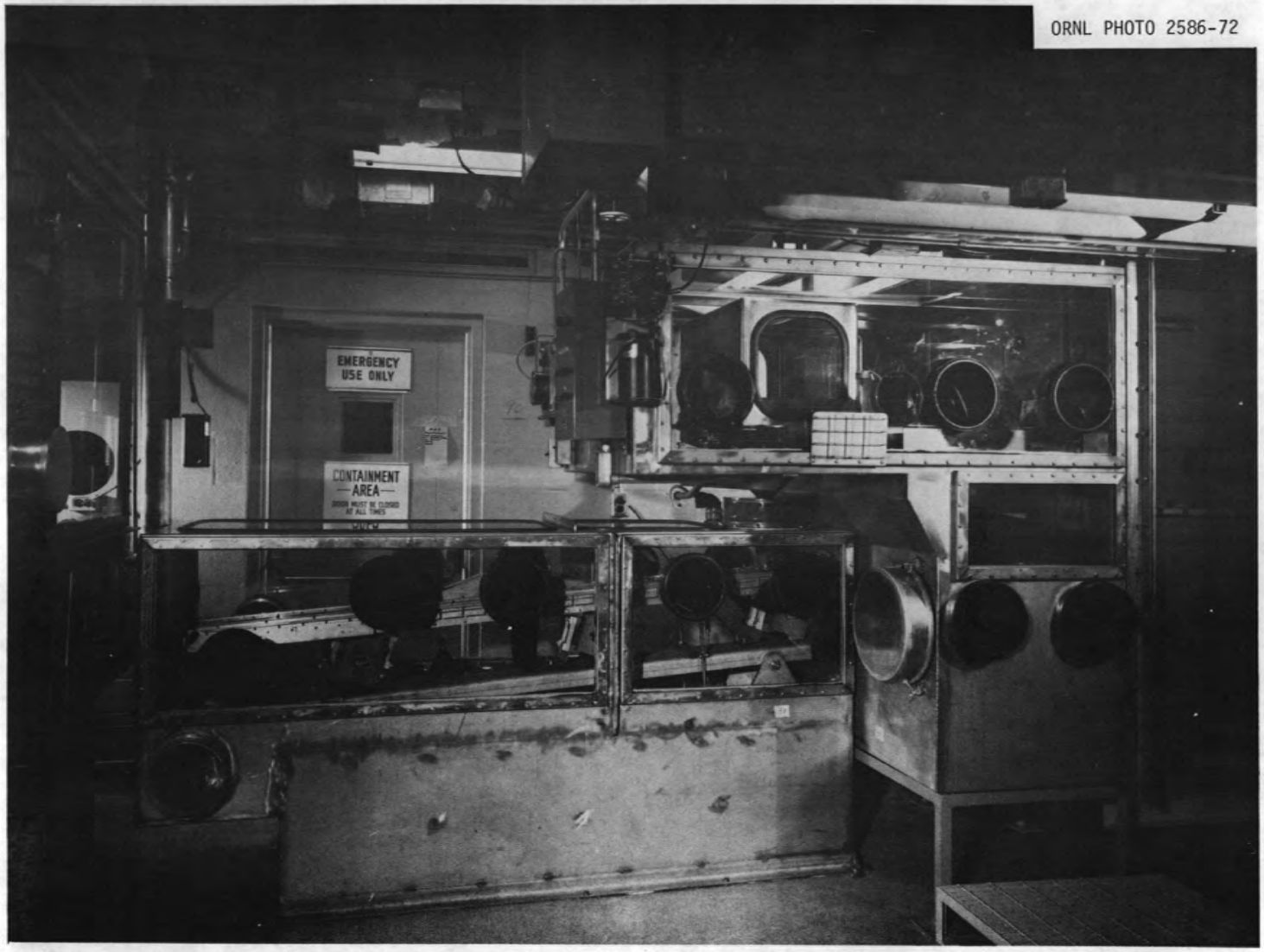

Fig. 15.5. Powder stabilizing enclosure.

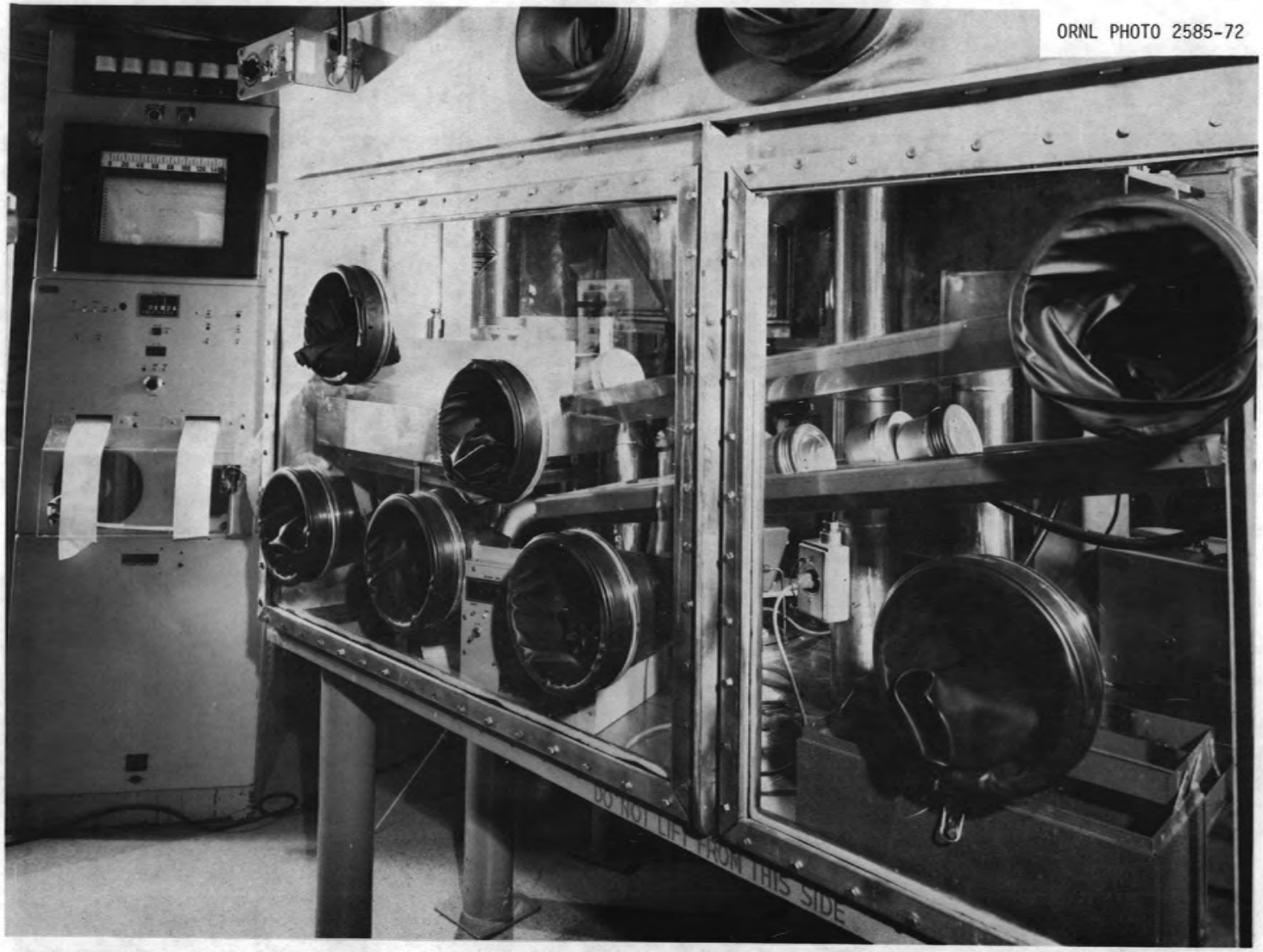

Fig. 15.6. Powder blending and load-out enclosure.

DISTRIBUTION

1. S. W. Ahrends, DOE-ORO
2. W. J. Armento
3. A. L. Beets
4. M. Bender
5. C. W. Boatman
6. W. T. Bostic
7. W. D. Box
8. R. E. Brooksbank
9. W. D. Burch
10. G. H. Burger
11. J. M. Butler
12. J. A. Carter
13. J. H. Cooper
14. L. T. Corbin
15. F. L. Daley
16. D. E. Ferguson
17. R. W. Glass
18. H. B. Graham
19. A. T. Gresky
20. D. M. Helton
21. J. R. Hightower
22. H. N. Hill
23. C. C. Hopkins
24. A. L. Johnson
25. L. J. King
26. R. F. Kirk
27. F. G. Kitts
28. A. M. Krichinsky
29. J. M. Leitnaker
30. J. A. Lenhard, DOE-ORO
31. R. E. Leuze
32. W. A. Lindsey
33. M. H. Lloyd
34. A. L. Lotts
35. A. P. Malinauskas
36. C. W. Martin
37. C. H. Miller
38. G. Newman
39. H. H. Nichol
40. R. G. Nicol
41-50. J. R. Parrott, Sr.
51. G. E. Pierce
52. H. Postma
53. J. B. Ruch
54. C. D. Scott
55. R. J. Shannon
56. W. A. Shannon
57. L. B. Shappert
58. C. G. Shorter
59. J. W. Snider
60. B. W. Starnes
61. M. Stewart
62. J. T. Thomas
63. D. B. Trauger
64. W. R. Whitson
65. R. G. Wymer
66. Lab Records-RC
67. Lab Records
68. ORNL Patent Section

☆U.S. GOVERNMENT PRINTING OFFICE: 1979-640-079/221