MARTIN MARIETTA ENERGY SYSTEMS LIBRARIES
3 4456 0059981 3

ORNL/TM-6983

ornl

OAK
RIDGE
NATIONAL
LABORATORY

UNION
CARBIDE

Actinide Partitioning-Transmutation Program Final Report. III. Transmutation Studies

J. W. Wachter
A. G. Croff

OAK RIDGE NATIONAL LABORATORY
CENTRAL RESEARCH LIBRARY
CIRCULATION SECTION
4500N ROOM 175
LIBRARY LOAN COPY
DO NOT TRANSFER TO ANOTHER PERSON
If you wish someone else to see this report, send in name with report and the library will arrange a loan.

OPERATED BY
UNION CARBIDE CORPORATION
FOR THE UNITED STATES
DEPARTMENT OF ENERGY

ORNL/TM-6983
Dist. Category UC-70

Contract No. W-7405-eng-26

CHEMICAL TECHNOLOGY DIVISION

NUCLEAR FUEL AND WASTE PROGRAMS

Waste Management Analysis for Nuclear Fuel Cycles
(Activity No. AP 05 25 10 0; FTP/A No. ONL-WHO)

ACTINIDE PARTITIONING-TRANSMUTATION PROGRAM FINAL REPORT. III. TRANSMUTATION STUDIES

J. W. Wachter
A. G. Croff

Date Published: July 1980

OAK RIDGE NATIONAL LABORATORY
Oak Ridge, Tennessee 37830
operated by
UNION CARBIDE CORPORATION
for the
DEPARTMENT OF ENERGY

MARTIN MARIETTA ENERGY SYSTEMS LIBRARIES
3 4456 0059981 3

CONTENTS

Page

Abstract 1

1. Summary, Conclusions, and Recommendations 1

1.1 Summary 1

1.1.1 Literature review 2
1.1.2 Generic analysis of actinide transmutation 3
1.1.3 Technetium and iodine transmutation 6

1.2 Conclusions 7
1.3 Recommendations 7

2. Introduction 8

2.1 Background 8
2.2 Partitioning-Transmutation Concept 9
2.3 Scope 10

3. Literature Survey 12

4. Actinide Transmutation in Thermal Reactors 13

4.1 Light Water Reactors 15

4.1.1 Homogeneously dispersed actinide recycle 17
4.1.2 Homogeneous actinide dispersal in a fraction of the reload fuel 18
4.1.3 Actinide recycle in target rods 19
4.1.4 Actinide recycle in target assemblies 20

4.2 Other Thermal Reactors 21

4.2.1 D_2O-moderated reactors 21
4.2.2 High-temperature gas-cooled reactors 22

4.3 Discussion 22

5. Alternative Actinide Transmutation Devices 23

5.1 Fast-Fission Reactors (LMFBRs) 24

5.1.1 Actinide transmutation in LMFBRs 24
5.1.2 Comparison of actinide transmutation in LWRs and LMFBRs 25

5.2 Other Transmutation Devices 34

6. Transmutation of Iodine and Technetium 37

6.1 Technetium-99 Transmutation 38

6.2 Iodine-129 Transmutation 38

7. Fuel Cycle Characterization for the P-T Assessment Program . . 40

7.1 Description of Fuel Cycles and Ground Rules 40

7.1.1 Description of reference and P-T fuel cycles . . . 40
7.1.2 Ground rules 43

Page

7.2 Calculational Methodology 44

7.2.1 Sophisticated reactor physics calculations 46

7.2.2 Calculation of detailed fuel-cycle material compositions 47

7.3 Reference and P-T Fuel Characteristics 47

8. References 50

ACTINIDE PARTITIONING-TRANSMUTATION PROGRAM FINAL REPORT. III. TRANSMUTATION STUDIES

J. W. Wachter and A. G. Croff

ABSTRACT

Transmutation of the long-lived nuclides contained in fuel cycle wastes has been suggested as a means of reducing the long-term toxicity of the wastes. A comprehensive program to evaluate the feasibility and incentives for recovering the actinides from wastes (partitioning) and transmuting them to short-lived or stable nuclides has been in progress for 3 years under the direction of Oak Ridge National Laboratory (ORNL). This report constitutes the final assessment of transmutation in support of this program. Included are (1) a summary of recent transmutation literature, (2) a generic evaluation of actinide transmutation in thermal, fast, and other transmutation devices, (3) a preliminary evaluation of ^{99}Tc and ^{129}I transmutation, and (4) a characterization of a pressuried-water-reactor fuel cycle with and without provisions for actinide recovery and transmutation for use in other parts of the ORNL program. The principal conclusion of the report is that actinide transmutation is feasible in both thermal and fast reactors, subject to demonstrating satisfactory fuel performance, with relatively little impact on the reactor. It would also appear that additional transmutation studies are unwarranted until a firm decision to proceed with actinide transmutation has been made by the responsible authorities.

1. SUMMARY, CONCLUSIONS, AND RECOMMENDATIONS

1.1 Summary

The disposal of radioactive wastes that are produced by nuclear power plants presents one of the most serious obstacles to public acceptance of nuclear power reactors for the large-scale generation of electric power. Much of the concern arises because of the long-lived radionuclides that are produced as a result of the fission process. Most of these nuclides have a relatively short half-life and decay to stable forms within a few hundred years. Others, including the actinides and the fission products ^{99}Tc and ^{129}I, which are of

particular interest here, have long half-lives and contribute significantly to the long-term radiotoxicity of the fuel cycle wastes. The long-term toxicity of these wastes can be reduced by segregating these elements from the wastes during reprocessing (partitioning) and irradiating them with neutrons so as to transmute them to shorter-lived, less toxic nuclides (the transmutation process).

Implementing partitioning and transmutation (P-T) for radioactive waste management involves changing the chemical processing methods and reactor fuel management practices as well as restructuring the reactor fuel cycle. The Chemical Technology Division at the Oak Ridge National Laboratory (ORNL) is coordinating a project that involves evaluating the feasibility, impacts, costs, and incentives of P-T by several national laboratories and private organizations. The work reported here summaries the transmutation-related analyses and results of this program.

Specifically, this report addresses the following topics on behalf of the ORNL P-T program:

1. a summary and analysis of the transmutation literature published since the previous comprehensive literature summary,[1]
2. a generic study of actinide transmutation in thermal reactors and other transmutation devices, based on the literature and studies supported by the ORNL P-T program,
3. a preliminary analysis of the transmutation of ^{99}Tc and ^{129}I, and
4. the characterization of reference and P-T fuel cycle materials for use in other phases of the ORNL P-T program.

1.1.1 Literature review

Although the last transmutation literature review was issued only a short time ago, 20 additional transmutation studies have since been identified and have been included in this report. Interesting aspects of these studies include

1. the use of sophisticated reactor physics codes for thermal reactor transmutation calculations,
2. the fabrication and irradiation of a small sample of ^{241}Am,

3. a more detailed study of a fast reactor fuelled with waste actinides, and
4. a coordinated and detailed examination of actinide and fission product transmutation in fission reactors.

It is generally very difficult or impossible to quantitatively compare the various transmutation studies due to either a lack of detail in the published information or flaws in the study ground rules. The most common flaw is that the actinide recycle system is not "closed" with respect to the actinides. For example, many investigators have studied the transmutation of the waste actinides (neptunium and the transplutonics) without considering uranium and plutonium. Unfortunately, this results in a substantial stream of unfissioned waste actinides leaving the fuel cycle in the form of ^{238}Pu (from captures in ^{237}Np and decays of ^{242}Cm) and ^{240}Pu (from decays of ^{244}Cm). This procedure effectively makes it impossible to determine the transmutation performance of a particular device.

Qualitatively, all of the studies conducted indicate that actinide transmutation is feasible in thermal and fast fission reactors, as well as fusion reactors and other specialized high-flux devices. However, even qualitatively, it is clear that a fast neutron spectrum is superior to a thermal spectrum for actinide transmutation, although the difference is probably not large enough to be an overriding decision parameter.

The transmutation of fission products other than iodine and technetium has not been studied very much as compared to the pre-1976 time frame. Both the more recent and earlier studies have indicated that the transmutation of other fission products will require very (and probably unrealistically) high fluxes. On this basis, the transmutation of fission products other than iodine and technetium should realistically be relegated to the infeasible category.

1.1.2 Generic analysis of actinide transmutation

1.1.2.1 Thermal reactors. As a result of DOE (then ERDA) guidance, an extensive effort was made in this program to examine and incorporate thermal reactors as transmutation devices. Therefore, detailed reactor

physics calculations concerning the transmutation of actinides in a plutonium-recycle PWR were performed under the auspices of the project. European investigators have also conducted relatively sophisticated calculations concerning actinide transmutation in boiling-water reactors (BWRs).

The results of these studies generally indicate that actinide transmutation is entirely feasible in thermal reactors at a rate of ∿6% per full-power year (at the fifth recycle), subject to developing adequate fuels. Furthermore, recycle is feasible in a variety of modes, such as homogeneously dispersing actinides in all or part of a fuel reload or concentrated in target elements. However, it is equally clear that the results of actinide recycle calculations in thermal reactors are very sensitive to ground-rule assumptions and calculational methodology. Specifically, sophisticated reactor physics calculations (i.e., multiple neutron-energy groups and multiple dimensions) are definitely required, and the reactivity criterion should be the end-of-cycle (EOC) reactively at constant burnup, not the beginning-of-cycle (BOC).

If the correct ground rules are used in the studies, it appears that the impacts of actinide recycle on the thermal reactor are relatively small and certainly much less than what was originally anticipated. This effect apparently results from the buildup of fissile isotopes in the recycled waste actinides, the principal contributor being the additional plutonium.

Finally, it does not appear that special thermal transmutation reactors (i.e., high-flux reactors) would be advantageous for actinide transmutation unless they are capable of paying for themselves by generating power. If this is not the case, the entire reactor cost must be attributed to transmutation, and the overall cost clearly becomes prohibitive.

1.1.2.2 Fast reactors. Fast reactors, specifically liquid-metal fast breeder reactors (LMFBRs), have been studied for years in the context of transmutation. Recent studies have added relatively little to the existing body of knowledge. More detailed calculations have confirmed that the impact of the recycled actinides on LMFBR

breeding ratios and enrichment requirements is very small, and may be positive or negative. Furthermore, it appears that a target assembly containing 25 to 40% recycled actinides diluted with depleted uranium would be neutronically identical to a standard LMFBR core assembly. Calculated transmutation rates are ∿9% per full-power year for an advanced-oxide LMFBR. It should be noted that the transmutation rate in LMFBRs can vary significantly, depending on the selected LMFBR design (i.e., on fuel burnup).

1.1.2.3 Fusion reactors. A coordinated effort under the sponsorship of the Electric Power Research Institute (EPRI) studied fusion reactors as transmutation devices in a more realistic manner than had been done in previous studies. The spatial arrangement of the plasma, structural materials, actinide blankets, and magnets was specifically accounted for in one- and two-dimensional calculations. The results showed that fusion reactors would not transmute actinides as quickly as previously thought. The principal reasons were that the flux declined relatively rapidly when passing through the subcritical actinide blanket, and that the outermost portions received very little irradiation since the power density was limiting at the innermost portions of the blanket. The solution to the poor performance would be to either make the blanket critical or very near critical, in which case it is effectively a fission reactor, or go to very high wall loadings to increase the flux (> 10 MW/m^2). In any case, it would seem difficult to improve on the performance of an LMFBR since this device is already limited by materials damage and power density considerations, and any increase in flux would only exacerbate these problems.

1.1.2.4 Other devices. Two other transmutation devices that have been proposed are particle accelerators (i.e., spallation reactors) and nuclear explosives. The former suffers from many of the drawbacks inherent in fusion reactors (i.e., flux decline in the blanket) plus the inefficiencies of converting neutrons to electricity, which is then converted to accelerated particles and finally to the transmutation neutrons. The nuclear explosives concept is expensive, subject to negation by international treaties, and almost certainly socially and

politically unacceptable at the projected rate of four 100-kiloton (kt) per year per 1000-MW(e) reactor.

1.1.3 Technetium and iodine transmutation

1.1.3.1 Technetium. The only long-lived (including stable) isotope of technetium produced by nuclear fission is ^{99}Tc, with a half-life of 213,000 years. This nuclide has been shown to contribute substantially to the long-term risk from a geologic repository under certain conditions. Therefore, as a part of the ORNL program, the possibility of its being transmuted was briefly investigated.

Technetium-99, which would have to be recovered from the liquid high-level waste and dissolver solids, can be transmuted at a rate of 11% per full-power year when placed in a target rod as the metal and irradiated in a uranium-enriched pressurized water reactor (PWR). The metal has a high melting point and is a likely candidate for irradiation, although there has been no experience to suggest that its behavior under irradiation would be satisfactory. Based on these considerations, it appears that ^{99}Tc transmutation is probably feasible.

1.1.3.2 Iodine. The isotope of iodine that is of interest is ^{129}I, which also has been shown to contribute significantly to the long-term risk from a geologic repository. Fission product iodine, after a relatively short decay period, is comprised of 75% ^{129}I (half-life = 15.9 million years) and 25% ^{127}I (stable). Calculations have shown that iodine in a target rod can be transmuted at a rate of 3% per full-power year, with both isotopes transmuting at roughly the same rate. The transmutation product is copious quantities of stable xenon gas.

Potential or actual problems associated with the transmutation of iodine are as follows:

1. Iodine and its compounds tend to be corrosive, and the development of a satisfactory cladding material would be very difficult.
2. Most iodine compounds decompose at or below reactor operating temperatures.
3. The xenon gas results in pressurization of the fuel rod.

4. The transmutation rate is very low.

As a result of these considerations, iodine transmutation should be considered to be marginally feasible at best.

1.2 Conclusions

The conclusions supported by this report are as follows:

1. Actinide transmutation is feasible in thermal and fast reactors, subject to the development of satisfactory fuel forms. Transmutation rates range from 6% per full-power year in a PWR to 9% per full-power year in an advanced-oxide LMFBR.
2. Actinide transmutation has a relatively small, but significant, impact on a thermal reactor. This impact can probably be accommodated using existing technology.
3. Actinide transmutation has virtually no impact on an LMFBR transmutation reactor.
4. The transmutation of ^{99}Tc appears to be feasible, subject to the development of a satisfactory fuel form.
5. The transmutation of ^{129}I is marginally feasible at best.
6. Many of the transmutation studies conducted to date are not comparable and thus are marginally useful because of methodological or calculational flaws.
7. Actinide recycle should have a negligible impact on any risks associated with reactor operation.

1.3 Recommendations

It appears that further transmutation studies of any description would be fruitless until a decision to proceed with P-T has been made. This conclusion is based on the following observations:

1. The number of studies conducted to date,
2. the generally favorable conclusions regarding the feasibility of actinide transmutation cited above and in the body of this report, and
3. the fact that transmutation does not appear to be the limiting or controlling aspect of the P-T concept.

This should not be taken to preclude physics studies and measurements needed for standard fuel cycles.

If a decision were made to implement P-T, then the most immediate need with respect to transmutation would be for cross section measurements on the nuclides to be transmuted and their progeny. In conjunction with this need, detailed reactor physics calculations and verification studies comparing calculated and measured compositions would be required for one or more realistic closed-recycle scenarios. Particular attention will have to be given to power peaking in thermal reactors. Small actinide samples must then be subjected to in-reactor irradiations to determine fuel behavior and fuel-cladding compatibility. This is particularly important if targets containing concentrated recycle actinides or fission products are used. Finally, full-scale demonstration irradiations would be required.

2. INTRODUCTION

The disposal of radioactive wastes that are produced by nuclear power plants presents one of the most serious obstacles to public acceptance of light water reactors (LWRs) for the large-scale generation of electric power. Must of the concern arises because of the long-lived radionuclides, particularly the actinides, that are produced as a result of the fission process. This report discusses one aspect (actinide transmutation) of a special method (P-T) that might mitigate the impact of the actinides.

2.1 Background

The fuel material inserted into a nuclear reactor consists of a fertile material (typically ^{238}U) enriched with a fissile material (^{235}U and/or plutonium). The fuel material discharged from the reactor consists of the unburned fraction of the original charge, the fission products from the consumed fuel, and a significant amount of nonfuel actinides such as neptunium, americium, and curium formed by nonfissile neutron absorptions in the fissile and fertile fuel materials. Chemical reprocessing of the fuel may be used at this point to recover the uranium

fissions: (1) there is no coulomb barrier to be overcome since the neutron is uncharged, and (2) there are now, and are expected to be in the future, large sources of neutrons in the form of fission and possibly fusion reactors.

This concept is summarized in Fig. 2.1, which depicts a generic P-T fuel cycle. A discharged batch of spent fuel, after some decay period, is sent to a reprocessing plant where the fissile and fertile actinides are recovered to a much greater extent than normal economic considerations would dictate. The other actinides are also recovered from the TRU wastes. The actinide-depleted wastes are sent to the repository. The recovered actinides, including all transuranics, are sent to the fabrication facility and are manufactured into fuel elements so that they may be reinserted into the reactor. This facility also has provisions for partitioning and internally recycling the actinides from the wastes. Actinide-depleted wastes are also sent to the repository from this facility. The fresh fuel, containing all of the recovered actinides, is then sent to the (fission or fusion) reactor for reirradiation, thus producing power and fissioning the actinides.

2.3 Scope

The Chemical Technology Division of ORNL is coordinating a project to evaluate the feasibility and incentives for P-T. The purpose of this report is to summarize the results of transmutation studies that are pertinent to this effort, both those supported by the ORNL program and those conducted independently by others. More specifically, this report addresses the following aspects of transmutation:

1. a summary of pertinent transmutation literature,
2. actinide transmutation in thermal reactors,
3. actinide transmutation in fast reactors,
4. transmutation of ^{129}I and ^{99}Tc, and
5. the characterization of an actinide recycle scenario for the P-T assessment program.

and/or plutonium for refabrication into fresh fuel and recycling back into the reactor. The by-products of fuel reprocessing and refabrication are a wide variety of radioactive wastes containing varying amounts of fission products, actinides, and activation products (irradiated structural metals) diluted in relatively large amounts of aqueous solutions of HNO_3 and/or chemical salts. The fission product and activation product nuclides in these wastes generally decay to stable nuclides within 1000 years. There are, however, two important exceptions: ^{129}I (half-life = 16 million years) and ^{99}Tc (half-life = 213,000 years). At this point, some of the wastes are still contaminated with significant amounts of long-lived actinides. These wastes are called transuranic (TRU) wastes and require long-term isolation from the biosphere so that they can decay to innocuous levels. This isolation is typically assumed to be provided by a geologic repository, although other alternatives may be feasible.

2.2 Partitioning-Transmutation Concept

One method that has been proposed for reducing the long-term hazard from TRU wastes isolated in a repository is to remove (i.e., partition) the actinides from all of the wastes in which they occur to a very high degree. This would, in theory, result in two products:

1. wastes that are essentially actinide-free and would represent a reduced long-term hazard, and
2. a relatively small amount of actinides recovered by the partitioning processes, which would require some alternative disposition.

The alternative actinide disposition considered in this report is transmutation. Transmutation is defined as irradiation by subatomic particles (e.g., neutrons), resulting in the conversion of the long-lived nuclides to shorter-lived species. Transmutation of the actinides consists of fissioning them to generate the generally shorter-lived fission products.

Although it is possible to fission actinides using charged particles, the preferred method for accomplishing this is by using neutrons. The use of neutrons has two advantages over other methods for inducing

ORNL DWG 80-45

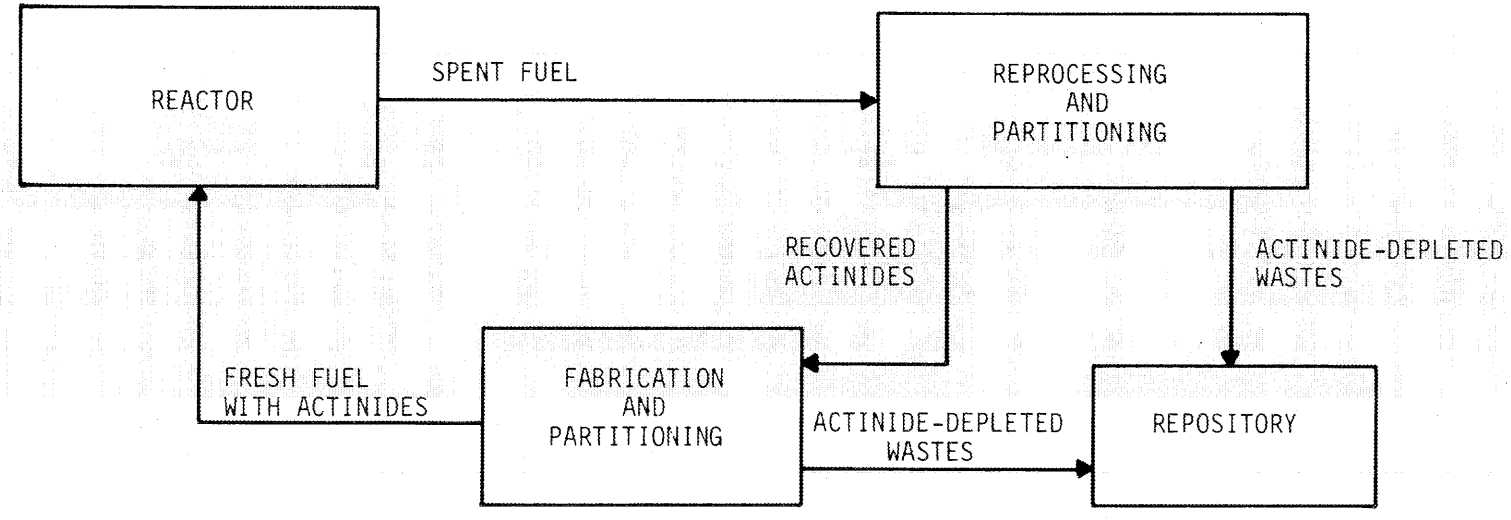

Fig. 2.1. Generic partitioning-transmutation fuel cycle.

As noted in the previous section, the transmutation studies described herein are restricted to neutron-induced transmutation. Furthermore, because of the relatively small number of studies on fusion reactors and the lack of definition concerning the design of a realistic fusion reactor, these potential transmutation devices are only considered briefly. Finally, as a result of these considerations, and of DOE (then ERDA) guidance, LWRs (specifically PWRs) were taken to be the reference transmutation device. LMFBRs were considered to be a parametric variation.

3. LITERATURE SURVEY

A review of the transmutation literature was given previously in ref. 1, which covers the major contributions to the literature prior to 1976. Table 3.1 lists many of the published contributions since that time. The table gives the principal investigator(s), the corporate or academic affiliation(s) of the investigators, a brief description of the transmutation studies reported, and a reference to any generally available documentation for the transmutation studies.

Evaluation of the transmutation literature cited in Table 3.1 indicates that, as in the previous review,[1] many of the studies are uncoordinated and repeat work which has already been performed. However, there are several interesting aspects to the studies listed in Table 3.1.

1. Relatively sophisticated actinide transmutation calculations (i.e., multigroup, multidimensional) have been performed for thermal reactors, thus giving a more accurate picture of the neutronic behavior of the actinides in these systems.[2-5]
2. A small sample of ^{241}Am was actually fabricated and irradiated.[6]
3. A relatively detailed study of a fast reactor fuelled solely with waste actinides was published.[7]
4. Seven of the fifteen references are based on studies conducted in western Europe, where there is apparently somewhat more interest in the P-T concept than in the United States.

Table 3.1. Summary of fission and fusion reactor transmutation studies

Investigators (Organization)	Description	Reference
C. Andersson (AE ATCMENERGI Studsvik, Sweden)	Recycling of actinides containing residues of yttrium and lanthanides in thermal and fast reactors	2
R. L. Engel D. E. Deonigi (Battelle, Richland)	Evaluations of fusion-fission concepts	8
G. A. Harte R. H. Clarke (UK Central Electricity Generating Board)	Incineration of UK reactor wastes in a fast breeder reactor	11
J. J. Prabulos (Combustion Engineering)	Actinide recycling in a 1500-MW(e) carbide LMFBR	12
M. Taube (Fed. Inst. for Reactor Research, Switzerland)	Transmutation of ^{90}Sr and ^{137}Cs in a fast reactor with a thermalized central region	13
R. Gasteiger (Karlsruhe)	Irradiation of $^{241}AmO_2$ in an aluminum matrix	6
T. H. Pigford J. Choi (U. of California-Berkeley)	Generic actinide transmutation study	14
E. Zamorani (Ispra)	Dose rates from LWR P-T fuel refabrication	15
T. C. Gorrell (SRL)	Survey calculations of candidate irradiation schemes for transmutation of waste actinides in thermal reactors	3, 5, 16
G. Oliva G. Palmiotti M. Salvatores L. Tondinelli (CNEN-Cassica)	Comparison of burnup in a Superphenix liquid-metal fast breeder reactor with that of a thermal reactor	17
G. Oliva L. Tondinelli (CNEN-Cassica)	Actinide recycling in LWRs	4
M. L. Williams J. W. McAdoo G. F. Flanagan (ORNL)	Actinide transmutation in an LMFBR	18
D. H. Berwald J. J. Duderstadt (Exxon Res. & Eng.; U. of Michigan)	A laser-fusion-driven actinide waste burner	9
D. J. Murphy W. M. Farr B. D. Ganapol (Sandia Laboratory; U. of Arizona)	Actinide transmutation in a dedicated, hard-spectrum reactor	7
T. A. Parish (U. of Texas)	Transmutation of fission products by fusion neutrons	10, 19
A. H. Robinson (Oregon State University) G. W. Shirley (Gulf Atomic) A. W. Prichard (Oregon State University) T. J. Trapp (PNL)	Actinide transmutation in a dedicated, hard-spectrum reactor	20
S. L. Beaman (GE)	Extensive study of actinide transmutation in LMFBRs	21

5. The study of fusion reactors as actinide and fission product transmutation devices has continued.[8-10] Generally, present and previous studies have shown fusion transmutation reactors to be less attractive than had been originally thought, unless the material being transmuted is nearly critical, thus preventing the flux from rapidly decreasing in the blankets.

4. ACTINIDE TRANSMUTATION IN THERMAL REACTORS

At the present time, and in the forseeable future, thermal reactors, principally LWRs, will form the basis of the power reactor system in the United States and the world. Studies of transmutation in thermal reactors have been limited in the past because (1) the necessity of accounting for actinide self-shielding and neutron spectrum changes made the calculations onerous, and (2) most investigators intuitively concluded that the hard-spectrum fast breeder reactors (FBRs) were superior transmutation devices and therefore concentrated their efforts on them. However, in light of the substantial number of existing and projected thermal reactors, it is desirable that actinide transmutation in these systems be better characterized in any comprehensive program involving P-T. Thus, the ORNL P-T program supported studies at Savannah River Laboratory concerning actinide transmutation in thermal reactors.[3,5,16] It is principally the relevant conclusions and results of these studies that are summarized here, although substantial use is also made of ref. 4. For the details of the calculational methods and cases considered, the reader is referred to the referenced reports.

Before beginning a discussion of actinide transmutation in thermal reactors, it is very important that the reader recognize a substantial deficiency in many of the actinide transmutation studies conducted to date. This deficiency is that the transmutation fuel cycle being considered is not "closed" with respect to the actinides being transmuted. For example, many studies measure transmutation efficiency based on the difference between the initial and final masses of waste actinides (i.e., neptunium and transplutonics). However, this is not valid

since some of the waste actinide nuclides produce either uranium or plutonium via neutron capture or decay. Thus, the waste actinides are neither fissioned nor counted in the residual waste actinide mass. Another common instance where the fuel cycle is not closed is when the plutonium is stored or treated as waste and is therefore not considered to be an actinide requiring transmutation. A final and very important example of an open fuel cycle is when waste actinide target rods or assemblies are used. By definition, the fissile and fertile elements are not included here. Analysis of these cases usually results in spuriously high transmutation rates and an improper basis of comparison with other cases. Unfortunately, virtually all of the actinide transmutation studies performed to date have their cases defined in this manner, thus rendering their results useless for quantitative comparison purposes. Therefore, the results reported in this section will be based on a qualitative analysis, evaluation, and synthesis of many different studies performed on different bases. Quantitative results will be given only in those few instances where the system is closed. Even here, other considerations may raise questions as to the accuracy of the results.

4.1 Light Water Reactors

There are four principal methods for recycling actinides in LWRs:

1. dispersing the actinides homogeneously throughout the entire fuel reload,
2. dispersing the actinides homogeneously in a fraction of the reload fuel,
3. concentrating the recycled waste actinides in target rods within an assembly, and
4. concentrating the recycled waste actinides in target assemblies.

In the first two methods, the actinides include all of the plutonium generated in the reactor. In the second two methods, plutonium is excluded from the targets, and the recycled actinides are the waste actinides.

When possible, the set of dimensions that will be used to characterize the different actinide recycle methods are (1) the fissile makeup penalty, (2) the actinide transmutation (i.e., fission) rate near steady state, and (3) the fraction of the reload comprised by recycled actinides.

The first dimension is important since it represents the net effect of neutronic penalty associated with transmuting the actinides in thermal reactors. Unfortunately, a recently identified effect that renders many of the earlier studies in this area useless is that the rate of fuel reactivity decrease becomes smaller as larger amounts of actinides are recycled. This, in turn, means that in order to maintain a constant EOC neutron multiplication factor (k) at constant burnup, which is the appropriate basis for comparing cycles, the BOC k value must decrease. However, in most of the studies conducted to date, the BOC k was held constant, since this is a much simpler procedure. Therefore, the fuel was too highly enriched. This is very important since the fuel enrichment must be significantly increased to change the BOC k by only a small amount in the systems under consideration. Thus, rather than include incorrect values in this report that may lead to erroneous conclusions, only qualitative, judgmental results will be given in those cases where the BOC k criterion was used.

The second characterization dimension is very important since it is a direct measure of the rate at which the transmutation scenario being considered is achieving its goal of fissioning the actinides. This parameter should be calculated at steady state since it is the only well-defined point common to all scenarios. However, this is usually not feasible because true steady state in the actinide region can take nearly 60 cycles.[1] Fortunately, effective steady state is reached within only 5 to 10 cycles; thereafter, only the heavy, low-concentration (and therefore marginally important) actinides are changing. An additional problem is that the incorrect enrichments mentioned above seriously affect the neutron flux, and therefore the transmutation rate.

The third dimension—the fraction of the reload comprised by recycled actinides—is important since (1) it is possible in some

scenarios for the waste actinides to overwhelm the system and (2) it is a good indicator of the impact of the recycled actinides on the fuel cycle.

4.1.1 Homogeneously dispersed actinide recycle

In the homogeneously dispersed actinide-recycle mode, the transuranics are recovered via partitioning and homogeneously mixed with the entire reload of fuel to the reactor. Advantages of this recycle mode are as follows:

1. The actinides are relatively dilute in the fuel and thus interact with the neutron flux to the maximum possible extent (i.e., minimum self-shielding effects are present).
2. The fact that all of the fuel is partially enriched with ^{235}U means that the thermal flux will be higher than in a purely plutonium-enriched fuel assembly, thus enhancing the transmutation rate.

These two items indicate that the homogeneously dispersed actinide-recycle mode should have the highest transmutation rate of all LWRs.

The disadvantage of this recycle mode is that the entire fuel reload contains transuranic nuclides and must be refabricated remotely, in contrast to standard plutonium recycle where only ∿33% of the fuel requires remote refabrication.

It appears that having to refabricate the entire reload remotely outweighs the higher transmutation rate which results from the actinide dilution, and that this option is not advantageous in an overall sense, as compared to other options which will be described later.

It should be noted that it is possible to devise homogeneously dispersed actinide scenarios in which the fissile makeup penalty is very large and the transmutation rate is low. For example, if the BOC $\underline{k}$ is used as the reactivity criterion, additional ^{235}U will be required. This will have the following effects:

1. increase the fissile makeup penalty,
2. decrease the thermal flux (i.e., transmutation rate), and
3. increase the production of ^{236}U and ^{237}Np.

The lower transmutation rate and the increased amounts of ^{236}U and ^{237}Np will require further ^{235}U additions in subsequent cycles, thus resulting in a situation where the solution exacerbates the problem. In fact, it appears that in the case where most of the discharged uranium is recycled without re-enrichment (i.e., the fissile content of the fuel is increased by adding a small amount of highly enriched ^{235}U), the ^{235}U required at steady state may be as much as three times greater than that required without waste actinide recycle.

4.1.2 Homogeneous actinide dispersal in a fraction of the reload fuel

In this recycle mode, the actinides are only placed in some fraction of the reload fuel, and the remainder of the reload is standard, low-enrichment UO_2. Although it is possible, in principal, to use any fraction of the reload, the most common assumption is that the waste actinides are recycled into the portion of the reload that would ordinarily be standard mixed oxide (MOX) fuel. This fraction is generally $\sim$33% for LWRs. This approach is advantageous in that it minimizes the amount of fuel that must be refabricated remotely while still retaining a maximum amount of dilution commensurate with this advantage. The principal disadvantage is that the thermal flux is significantly lower in a MOX fuel assembly as compared to a UO_2 assembly, thus reducing the transmutation rate. Calculated transmutation rates for this scenario are on the order of 6% per full-power year of irradiation. The waste actinide content of the MOX fuel is $\sim$1%.

In the scenario where standard MOX fuel is assumed to be made up with virgin natural uranium, the first cycle that includes the waste actinides requires that the MOX assembly uranium enrichment be increased from the 0.7 wt % in the standard assembly to 2.9 wt % ^{235}U in order to obtain the same EOC $\underline{k}$. However, after five recycles, the required uranium enrichment in the actinide recycle assembly drops to 0.7 wt % ^{235}U, and this value would probably drop somewhat further with additional recycles. This effect is due to the buildup of additional plutonium and the decline in the production rate of the relatively nonfissile ^{237}Np because of the reduced amounts of ^{235}U in the MOX assemblies.

To demonstrate the effects of using BOC k as the appropriate criterion for measuring the reactivity effects of actinide recycling, a scenario identical to the one above has been calculated, except that BOC k was used to set the uranium enrichment in the MOX assembly instead of the EOC k. The result was that the uranium enrichment required in the fifth recycle was 4.0 wt % ^{235}U, as compared to 0.7 wt % in the case where the EOC k was used. Thus, a difference of 3.3 wt % ^{235}U resulted simply by changing the reactivity measure.

4.1.3 Actinide recycle in target rods

In this actinide recycle mode, the waste actinides are concentrated into target rods with enough diluent to give the rod the same specific power as those surrounding it. The plutonium is recycled in the same manner as in a standard LWR plutonium-recycle scenario. In this case, however, 1 to 2% of the fuel rods in either the UO_2, the MOX, or both types of fuel assemblies are replaced with the target rods. This recycle mode would be expected to have a somewhat lower actinide transmutation rate due to the self-shielding of the concentrated actinides. However, this effect should not be too large since the target rod is surrounded by critical fuel rods. The overall fissile makeup penalties in this case should also be relatively small or nonexistent, depending on the recycle being considered.

When using this recycle mode, it would generally be desirable to remove the target rods from the fuel assemblies before sending the fuel material to the reprocessing plant, thus avoiding the dilution of the waste actinides in the large fuel mass in the reprocessing plant dissolver. The target rods would most likely be taken to a facility specially designed to handle their unique composition and radiation properties. The process of having to remove the target rods from discharged fuel assemblies and insert the refabricated (and highly radioactive) target rods into fresh assemblies is a disadvantage of this recycle mode.

This recycle mode is advantageous in that it allows most of the discharged fuel to be fabricated and transported normally while

achieving a relatively high transmutation rate due to the target rods being surrounded by active fuel. It also offers the possibility of diluting the waste actinides with some material so that they can be reinserted into the fuel assembly and irradiated without reprocessing. This yields the dual advantages of (1) decreasing the number of times the waste actinides must be reprocessed and refabricated (i.e., reduces actinides reporting to wastes) and (2) decreasing the out-of-reactor time of the actinides, which increases the overall transmutation rate. This "no-reprocessing" option has not been investigated extensively, but there appears to be two possible problems: (1) the large fraction of the core taken up by the recycled actinides, since their volumes are not reduced by reprocessing after each cycle, and (2) finding a suitable diluent that will contain the actinides and fission products during extended irradiation and yet will be amenable to dissolution for reprocessing.

4.1.4 Actinide recycle in target assemblies

The final recycle mode involves concentrating the waste actinides in a target assembly that is totally comprised of target rods. About 5% of a fuel reload would consist of the target assemblies, although this number might vary from 1 to 10%, depending on power peaking and transmutation rate considerations.

The recycle of the waste actinides in a target assembly with natural uranium as a diluent is not feasible due to the severe flux depression in the center of the subcritical assembly. However, a tolerable flux level can be obtained in this situation by removing the target rods in the center of the assembly, thus forming a large water hole which maintains the flux at an acceptable level throughout the remaining portions of the assembly.

An alternative procedure is to enrich the assembly in order to make it approximately critical and thus generate a self-sustaining flux throughout the assembly. The transmutation rates that result are substantially lower than those in the homogeneous cases but are still acceptable. The enrichment increases required to achieve these

transmutation rates are also larger than those in the homogeneous cases. Finally, even though the average target assembly power is the same as that of a standard assembly, substantial power peaking problems are evident (a factor of 2 between assembly center and corner). Thus, a substantial increase in enrichment grading will be required in the target assemblies in order to achieve a satisfactory power shape.

4.2 Other Thermal Reactors

There are two other types of thermal actinide transmutation reactors that have been considered in brief studies — D_2O-moderated reactors and high-temperature gas-cooled reactors (HTGRs).

4.2.1 D_2O-moderated reactors

The two heavy-water reactors that have been briefly examined[3] are (1) a production reactor at the Savannah River Plant (SRP) and (2) a CANDU reactor. The SRP production reactor is a specially designed, high-power-density, high-flux reactor (as compared to a PWR) operating at atmospheric pressure. As a result of the high flux, its transmutation rates are quite high when compared to other thermal reactors. However, the use of this type of reactor as a transmutation device entails several substantial penalties that do not exist in commercial reactors:

1. SRP production reactors do not produce usable power or heat. Thus, the entire cost of building and operating the reactor must be allocated to transmutation.
2. The attainment of the high fluxes requires the use of highly enriched uranium as the driver fuel.
3. The waste actinide loadings must be kept small; the high neutron flux would otherwise be seriously degraded.

As a result of these considerations, it does not appear to be beneficial, in an overall sense, to incur these penalties when the insertion of the actinides into commercial thermal reactors does not cause any substantial difficulties. However, this conclusion might be altered if it were possible to build a high-flux reactor that would be capable of paying for itself with the usable power it produced.

A plutonium-recycle CANDU reactor has been studied briefly as an actinide transmutation device. Overall, its performance appears to be about the same as that of LWRs when operating on the same actinide composition and mass. However, when operating in the self-generated actinide recycle mode, it appears to be somewhat better than LWRs because of the lower actinide production rate resulting from the low fuel burnup (∿8000 MWd/MTHM).

4.2.2 High-temperature gas-cooled reactors

HTGRs have been studied in a very preliminary fashion for use as actinide transmutation devices. The actinide transmutation rates achievable in an HTGR are somewhat higher than those in a LWR, principally because of the somewhat higher flux levels in the HTGRs. Studies thus far have not progressed beyond this qualitative statement.

4.3 Discussion

Based on the preceding discussion, the following conclusions concerning actinide transmutation in thermal reactors appear to be appropriate.

1. The majority of actinide transmutation studies concerning thermal reactors are not comparable with each other and are marginally useful because (1) the system considered was not closed with respect to the actinides, (2) neutron spectral changes and cross section self-shielding effects were not accounted for, and/or (3) the fuel enrichments were based on initial instead of final reactivity.
2. The few consistent studies that have been conducted plus qualitative inferences from other studies indicate that actinide transmutation is feasible in thermal reactors in the following recycle modes: (1) homogeneously dispersed in an entire reload, (2) homogeneously dispersed in part of a reload, and (3) in target rods. Actinide transmutation in target assemblies is probably feasible, but more information

concerning transmutation rates and power peaking is needed before reaching a final conclusion.

3. The impacts of the recycled actinides on the thermal reactor are not large, principally because of the reactivity declining at a lesser rate in fuels containing recycled actinides. As a result, fissile makeup penalties are largest in the first few recycles and decline to zero or even negative values (i.e., the waste actinides are a net reactivity benefit) after about five recycles.
4. Actinide transmutation rates in LWRs are $\sim$5 to 7% fissioned per full-power year of irradiation for homogeneous and target rod recycle, which is a tolerable rate. Actinide transmutation rates may be too low in target assemblies, but more studies will be required for a final determination.
5. Actinide transmutation in special high-flux transmutation reactors does not appear to be beneficial unless the reactor pays for itself by generating usable power.
6. Fuel behavior and fuel-cladding compatibility remain as unanswered questions. These aspects are probably not important in the homogeneous options where waste actinide contents are typically 2% or less. However, they could be a major consideration in the target options.

5. ALTERNATIVE ACTINIDE TRANSMUTATION DEVICES

Most of the transmutation studies conducted under the ORNL P-T program have concentrated on thermal transmutation reactors, specifically PWRs. This emphasis was the result of guidance from DOE (then ERDA), which was, in turn, a result of the President's deferral of LMFBRs.[22] However, through the years that actinide transmutation has been studied, a large variety of transmutation devices other than thermal fission power reactors have been proposed. It is the purpose of this section to identify these different devices and to briefly discuss what their implications might be to P-T.

5.1 Fast-Fission Reactors (LMFBRs)

5.1.1 Actinide transmutation in LMFBRs

Up to the present time, LMFBRs have been the most intensively studied actinide transmutation devices (see ref. 1 and Sect. 3 of this report). As with the thermal reactors, most of these calculations have been relatively simple in a neutronic sense. Fortunately, the hard neutron spectrum in the LMFBR eliminates many of the difficulties that plague the thermal reactor transmutation calculations. In fact, the only consistent methodological difficulty in the LMFBR studies is the use of an open system with respect to the actinides. The following paragraphs will summarize, in an overall sense, the results of the many LMFBR actinide transmutation studies. A consistent comparison of actinide transmutation in a PWR and an advanced-oxide LMFBR will be given in the following section.

The most important aspect of an LMFBR with respect to actinide transmutation is that the neutron spectrum has a very high average energy (i.e., it is hard). This fact has two important results. First, the mean free path of a neutron in an LMFBR is very long when compared to that in a thermal reactor. The net effect of this is to "homogenize" the core and drastically reduce the self-shielding and power peaking effects evident in the thermal reactors. The second result of the hard neutron spectrum is that the fission-to-capture ratio for all of the actinides is larger than in a thermal reactor. This effectively means that fewer neutron absorptions are required to fission an actinide, and thus, the recycled actinides are more similar to "fuel" than in a thermal reactor.

The results of these two aspects of actinide recycle in LMFBRs, based on the large number of studies referred to previously, are as follows:

1. Actinide transmutation is feasible in LMFBRs, subject to the development of satisfactory fuels containing waste actinides.
2. The recycle mode (homogeneous vs targets) of the actinides has very little effect on a LMFBR.

3. An actinide-recycle target assembly containing 25 to 40% waste actinides diluted with depleted uranium is neutronically indistinguishable from a standard [$(Pu,U)O_2$] fuel assembly.
4. The effects of actinide recycle on the LMFBR core enrichment and the breeding ratio are extremely small and may be positive or negative.
5. The actinide transmutation rate depends substantially on the type of LMFBR considered (i.e., prototype, early oxide, advanced-oxide, etc.) due principally to differences in reactor fuel burnup.

Most of the LMFBR actinide transmutation studies conducted to date have assumed that the actinides would be concentrated into target assemblies to minimize the amount of fuel containing neutron-active curium isotopes. However, no study has yet been performed that considered the cost penalties of handling the low-volume target assemblies in small, separate reprocessing and fabrication facilities vs simply homogenizing the actinides in all of the recycle fuel and paying the accompanying fabrication penalty. Fortunately, as noted in item 2 above, this makes no difference with respect to transmutation considerations.

5.1.2 Comparison of actinide transmutation in LWRs and LMFBRs

The LMFBR has been by far the most intensively studied actinide transmutation device. Many of these studies concluded that LMFBRs are superior transmutation devices. Unfortunately, this conclusion was often arrived at based on limited calculational studies (none involving a consistent comparison with an alternative system) and scientific judgment/experience.

To alleviate this problem, a direct comparison of the transmutation performance of a plutonium-recycle PWR and an advanced U-Pu oxide LMFBR was undertaken. The inclusion of plutonium recycle is necessary in both systems to ensure that the system is closed with respect to the elements of potential concern in actinide transmutation (i.e., the transuranics). A schematic diagram of the PWR/LMFBR transmutation system considered is shown in Fig. 5.1. In this system, one reactor (e.g., the PWR) is

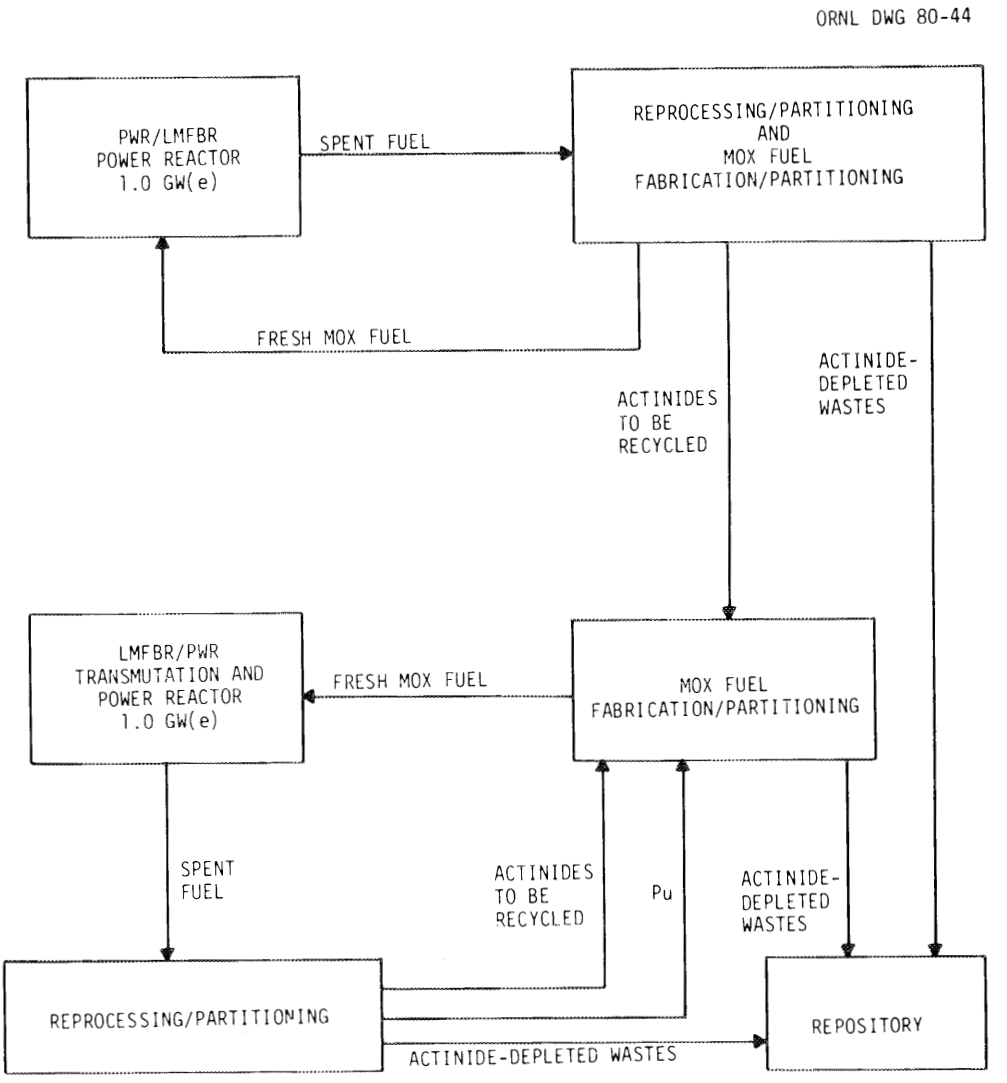

Fig. 5.1. Schematic diagram of a PWR/LMFBR actinide transmutation system.

operating in its standard mode, producing power, waste actinides to be recycled (i.e., neptunium and the transplutonics), and actinide-depleted wastes. The other reactor (e.g., the LMFBR) is being charged with recycled actinides and is thus serving as the transmutation device, as well as producing power, actinides to be recycled, and actinide-depleted wastes. Two cases are then run using this system: one with the PWR as the transmutation reactor and the other with the LMFBR as the transmutation reactor. The differences between the two cases become more obvious when the calculations are carried out in such a manner that only the recycled actinides plus their decay and capture progeny are taken into account; that is, the fuel material in the reactor is ignored even though the recycled actinides from this fuel are accounted for.

The basic PWR model used in this study is documented in ref. 23. The cross sections were updated using values determined by Gorrell[5] in his study of actinide transmutation in PWRs. The LMFBR model used is documented in ref. 24 and has a core fuel burnup of 100,000 MWd/MTHM. The basis of the mass flows in the system was 1.0 GWY(e) of electricity from each of the two reactors. All calculations were performed with the ORIGEN computer code.

5.1.2.1 Quantitative comparison. The quantitative results of these two cases are summarized in Table 5.1. In this table, several characteristics are given for three actinide streams: the total actinides introduced into the recycle system, the recycled actinides charged to the PWR, and the recycled actinides charged to the LMFBR. The total actinides introduced into the system represents the sum of the actinides produced by the standard plutonium-recycle PWR and the standard plutonium-recycle LMFBR. These actinides are added to the actinide recycle stream each time the recycled actinides are re-fabricated. The PWR and LMFBR recycled actinide streams are the total amount of recycled actinides in a fuel reload, including those just introduced and those that have been irradiated previously but not fissioned. These recycled actinide streams are examined just as they are about to be reinserted into the transmutation reactor (i.e., as either fresh PWR or LMFBR fuel assemblies).

Table 5.1. Quantitative comparison of actinide recycle in a PWR and an LMFBR

Nuclide or element[a]	Composition of recycled actinides								
	Actinides[b] introduced into recycle system			Recycled actinides charged to PWR[c]			Recycled actinides charged to LMFBR[c]		
	g/recycle	wt % of element	wt % of total heavy metal	g/recycle	wt % of element	wt % of total heavy metal	g/recycle	wt % of element	wt % of total heavy metal
^{234}U	0			5,510	57.9		3,550	77.6	
^{235}U	0			2,960	31.1		680	14.8	
^{236}U	0			1,040	11.0		347	7.6	
Total U	0		0	9,530		2.5	4,580		1.5
^{237}Np	16,000	100	22.9	37,590	100	10.0	34,530	100	11.1
^{238}Pu	0			74,300	50.6		38,150	44.1	
^{239}Pu	0			16,680	11.4		11,570	13.4	
^{240}Pu	0			26,240	17.9		26,270	30.3	
^{241}Pu	0			10,050	6.9		3,080	3.6	
^{242}Pu	0			19,370	13.2		7,470	8.6	
Total Pu	0		0	146,700	-	39.1	86,590	-	27.9
^{241}Am	17,000	41.3		24,360	35.6		35,700	32.8	
^{242m}Am	0	0		180	0.3		2,620	2.4	
^{243}Am	24,200	58.7		43,820	64.1		70,490	64.8	
Total Am	41,200		59.0	68,360	-	18.2	108,800	-	35.0
^{242}Cm	2,370	18.8		2,480	2.2		2,490	3.3	
^{243}Cm	0	0		250	0.2		290	0.4	
^{244}Cm	9,810	78.0		77,780	69.1		53,240	69.7	
^{245}Cm	350	2.8		15,970	14.2		14,250	18.7	
^{246}Cm	56	0.4		14,030	12.5		5,530	7.2	
^{247}Cm	0.3	2.7E-03[d]		1,490	1.3		470	0.6	
^{248}Cm	9.1E-03	7.2E-05		650	0.6		110	0.1	
Total Cm	12,580		18.0	112,700	-	30.0	76,390	-	24.6

Table 5.1 (continued)

Nuclide or element[a]	Composition of recycled actinides								
	Actinides[b] introduced into recycle system			Recycled actinides charged to PWR[c]			Recycled actinides charged to LMFBR[c]		
	g/recycle	wt % of element	wt % of total heavy metal	g/recycle	wt % of element	wt % of total heavy metal	g/recycle	wt % of element	wt % of total heavy metal
^{249}Cf	1.3E-05			27	66.3		8	83.5	
^{250}Cf	1.5E-05			5	12.1		1	14.8	
^{251}Cf	1.3E-06			4	9.3		0.1	1.6	
^{252}Cf	9.4E-07			5	12.2		0.006	0.07	
Total Cf	3.0E-05		4.3E-08	40		0.01	9		3.0-0.3
Total heavy metal	69,780		100	374,900		100	310,900		100
				Decay neutrons					
Neutron activity,[e] neutrons s^{-1} $MTHM^{-1}$		3.0E+12			3.4E+13			2.6E+12	
Principal contributors		^{244}Cm(53.3%), ^{242}Cm(46.5%)			^{252}Cf(90.5%), ^{244}Cm(7.1%)			^{244}Cm(76.3%), ^{242}Cm(12.9%)	
				Thermal power					
Decay heat,[e] kW/MTHM		558			736			603	
Principal contributors		^{244}Cm(71.3%), ^{242}Cm(23.3%)			^{244}Cm(79.7%), ^{238}Pu(15.3%)			^{244}Cm(80.4%), ^{238}Pu(11.6%)	
				Photons					
Photon activity,[e] photons s^{-1} $MTHM^{-1}$		8.9E+17			2.6E+17			2.7E+17	
				Actinide transmutation rate					
Percent of actinides fissioned per full-power year		-			6.4			9.3	
				Proximity to steady state					
Ratio of actinides charged to tenth recycle to actinides charged to ninth recycle		-			1.0359			1.0244	

[a]Only major nuclides and elements listed.

[b]From 1 GWY(e) of PWR electricity plus 1 GWY(e) of LMFBR electricity.

[c]Tenth recycle.

[d]Read as 2.7×10^{-3}.

[e]Recycled actinides only.

Table 5.1 compares the composition of these three materials. The newly introduced actinides are predominately americium, with lesser amounts of neptunium and curium. Plutonium and uranium are not included here since they are considered to be fuel and not waste actinides. The PWR recycled actinide composition is markedly different from that of the newly introduced actinides. Substantial amounts of plutonium are present, principally resulting from the neutron captures in ^{237}Np and the decay of ^{242}Cm to ^{238}Pu, both followed by successive neutron captures in the ^{238}Pu and its progeny. Both the neptunium and americium are significantly depleted compared to the unirradiated feed, and the fraction of curium is greatly increased because of neutron captures in americium. The total mass of the actinides recycled in the PWR is about five times greater than that of the unirradiated feed and is equal to $\sim$80% of a fuel assembly, assuming that no other heavy metal is present. The composition of the actinides recycled in the LMFBR is roughly similar to that for the PWR, although there are noticeable differences. The LMFBR recycled actinides contain a much higher fraction of americium and less plutonium and curium. This is principally due to the more fissile nature of the plutonium and curium isotopes as compared to ^{241,243}Am. At the beginning of the tenth recycle, the total LMFBR recycled actinide mass is 311 kg/GWY(e), which is 83% of that for the PWR transmutation reactor.

Table 5.1 also compares the neutron activity of the three different actinide materials, assuming that no diluent material is present (e.g., fuel). The PWR actinides have a markedly higher neutron activity because of the much larger amounts of ^{252}Cf in the PWR recycled actinides (5 g) as compared to the LMFBR recycled actinides (0.006 g). This difference is indicative of one disadvantage inherent in recycling actinides in thermal reactors.

The decay heat of the unirradiated and recycled actinides is summarized in Table 5.1. As a basis for comparison, the decay heat of fresh PWR plutonium-enriched fuel is 0.7 kW/MTHM. Thus, even allowing for the diluting effects of fuel, the decay heat of the fresh fuel in the actinide recycle system will be much higher than in a

standard fresh plutonium-enriched PWR fuel. There is relatively little difference between the PWR and the LMFBR recycled actinides for this characteristic.

The photon activities of the actinide materials are also compared in Table 5.1. The PWR and LMFBR recycled actinides are nearly identical, although they are about a factor of 2000 greater than the photon activity of standard fresh plutonium-enriched PWR fuel.

The transmutation rates of the two transmutation reactors are also summarized in Table 5.1. The transmutation rate of the LMFBR is ∿45% greater than that of the PWR, principally due to the higher fission-to-capture ratio in the hard LMFBR neutron spectrum. However, it should be noted that the transmutation rate of an LMFBR can vary substantially, depending on the type of LMFBR selected, while the transmutation rate for the PWR is relatively fixed. For example, an early oxide LMFBR might have a burnup of 60,000 to 80,000 MWd/MTHM and a correspondingly lower specific power or residence time in the core, thus resulting in a proportionately lower transmutation rate. In addition, the values for these transmutation rates are highly idealistic since they assume that the actinides are being irradiated continuously. In reality, the reactors would be expected to have a capacity factor on the order of 75%. Also, for every 3 years the actinides are being irradiated, they will be out of the reactor for reprocessing and refabrication for ∿2 years, thus further reducing the transmutation efficiency. These values (3 x 0.75 years of full-power irradiation per 5 years of calendar time) give a transmutation efficiency of 45% and actual transmutation rates of 2.9% per calendar year for the PWR and 4.2% per calendar year for the LMFBR.

The final part of Table 5.1 gives an indication of how close the recycled actinide compositions, and therefore most of the other characteristics, are to their steady-state values. As is evident, neither of the reactors is at steady state at the beginning of the tenth recycle. However, the rate of mass increase in the system is relatively small for both transmutation reactors, and the characterizations would probably change little if true steady state were achieved. One possible exception to this is the neutron activities of

the recycled actinides from both reactors, particularly the PWR. Because of the substantial dependence of the neutron activity on the amount of ^{252}Cf present and the long time required to reach steady state for this nuclide, the neutron activities might increase by as much as a factor of 100 for the PWR recycled actinides and a factor of 10 for the LMFBR recycled actinides. Removal of the ^{252}Cf is not effective in reducing neutron activities because it builds back up to $\sim$60% of its original level in only one irradiation cycle.[1] Although it is probably not possible to recycle actinides until steady state is attained (100 to 200 years), this thought should be kept in mind when considering the recycle of actinides over the long term.

5.1.2.2 Qualitative comparison. There are some attributes of the PWR-LMFBR transmutation device comparison that are not amenable to a quantitative comparison because of the nature of the comparison or because comparable numbers have not yet been determined. These comparison attributes are listed in Table 5.2, along with a brief, qualitative discussion of the attribute with respect to the PWR and LMFBR.

The first attribute is concerned with whether the use of target fuel assemblies is viable in these reactors. The use of such an assembly, which is comprised of highly concentrated recycled actinides and some diluent to limit the specific power, may be desirable to minimize the number of highly radioactive assemblies that must be handled and transported and to allow these assemblies to be reprocessed in special facilities tailored for their unusual composition (Table 5.1). The PWR is at a disadvantage here because of the lower thermal flux and the self-shielding of the recycled actinides. It is this consideration, plus the extra expense of handling the small number of targets, that results in the most likely PWR transmutation case being that in which the actinides are homogeneously distributed in the MOX fuel.

The power peaking in the PWR-MOX fuel assembly containing recycled actinides can also be quite severe due to the high thermal flux leakage into the MOX assembly from adjacent ^{235}U-enriched assemblies. It appears that this effect can be controlled, but multiple enrichments of MOX fuel will be required to control the peaking.

Table 5.2 Qualitative comparison of actinide recycle in a PWR and an LMFBR

Attribute	PWR	LMFBR
Use of target fuel assemblies	Penalties incurred because of the thermal flux depression in the middle of the assembly and self-shielding effects.	Can be made to appear neutronically the same as a regular core assembly; no penalties incurred.
Power peaking	Severe at edge of MOX assembly with recycled actinides and in target assemblies because of extra fissile material present; several different enrichments most likely needed.	Virtually nonexistent if a proper amount of diluent (UO_2 or non-fissile/fertile material) is used.
Fissile makeup requirements	Extra fissile makeup required during first few recycles; after first few cycles, the recycled actinides represent a small fissile benefit.	Reduces fissile makeup requirements by the volume displaced in the reactor plus possibly an additional small amount.
Breeding/conversion ratio effects	Very small	Very small
Long-term viability	Limited due to the continuous need for fissile material (i.e., ^{235}U).	Very good since exogenous sources of fissile material are not needed.

The PWR requires some extra fissile material during the early recycles when the generally fertile recycled actinides are building up sufficient amounts of fissile nuclides. The amounts required are not large, and thus this attribute does not show any substantial difference between the PWR and the LMFBR.

The breeding/conversion ratio effects caused by the recycled actinides also appear to be very small because they are principally due to second- and third-order effects which have not been fully accounted for. The effects may, in fact, turn out to be zero or slightly positive if the breeding/conversion ratio is defined so as to account for the nonstandard fissile and fertile materials in the recycled actinides (e.g., ^{238}Pu and ^{245}Cm, respectively).

Finally, a major disadvantage of the PWR is its limited long-term potential as a transmutation device due to the limited availability of naturally occurring fissile materials required to fuel this reactor. Since partitioning and transmutation could not possibly begin in earnest until after the year 2000, the remaining lifetime of the PWR with respect to transmutation is restricted to perhaps five or six cycles (at 5 years per cycle) before the number of PWRs begins to decline.

5.2 Other Transmutation Devices

Although LMFBRs are by far the most widely assumed actinide transmutation devices, a variety of other devices have also been proposed and briefly studied for this application. These other devices can be broken down into the following categories:

1. fusion reactors,
2. particle accelerator devices, and
3. nuclear explosives.

The use of fusion reactors as transmutation devices has been studied by several organizations during the last few years. Virtually all of these studies have assumed the use of a Tokamak-type fusion reactor with the actinides arranged in annular blankets around the torus. Most of the studies conducted to date have analyzed the problem by generating

cross sections appropriate to the anticipated blanket neutron spectrum and then calculating the actinide transmutation rate using a simple depletion code such as ORIGEN. The fusion reactor appeared to be very attractive as a transmutation device because of the very high neutron fluxes. However, a more recent and extensive study[25] mocked up the geometry of the torus and actinide blankets explicitly and then calculated the actual neutron spectrum and flux level in all portions of the actinide blanket. Their results showed that the transmutation rates were not nearly as high as those calculated in previous studies. This effect appears to be a result of the neutron flux declining sharply as it passes through the actinide blanket because the blanket is subcritical. The portions of the blanket nearest the torus were highly irradiated, whereas those portions furthest from the torus were virtually untouched. The conclusions of this study were that actinide transmutation in fusion reactors with wall loadings on the order of 1 MW/m^2 were marginally acceptable (transmutation rates appear to be $\sim$8% per full-power year), but that wall loadings on the order of 10 MW/m^2 were necessary if an incentive were to exist for actinide transmutation in fusion reactors. However, the use of the higher wall loading requires that the actinide density in the blanket be reduced to maintain an acceptable power density. Thus, under these conditions, more fusion reactors would be required for a given mass of recycled actinides. Finally, the power density and configuration of the actinide blankets of the fusion reactor are very similar to those in fast fission reactors. This means that the design of the blanket will involve a complex balancing of heat removal, radiation damage, transmutation rate, and ease-of-refueling considerations based on the same engineering levels as the LMFBR. In summary, actinide transmutation in fusion reactors appears to be feasible and at least as efficient as LMFBRs, but there are a substantial number of engineering problems to be overcome, and the transmutation performance of these devices appears to be similar to that of LMFBRs and not as overwhelmingly superior to other transmutation devices as they once did.

Another class of transmutation devices that has been heavily investigated is that based on particle accelerators. The most popular concept appears to be that of using a particle accelerator to make a

beam of protons with energies on the order of 1 to 10 GeV. These protons are impacted on a molten heavy-metal target such as lead, bismuth, or uranium. The high-energy protons disintegrate the heavy nucleus in a spallation reaction, producing 5 to 50 neutrons per interaction. These neutrons are then used to transmute the actinides which are in a blanket surrounding the spallation target. The spallation target is molten for heat removal purposes. The large numbers of neutrons produced by each proton result in a very intense neutron source. However, there are several serious drawbacks to this concept.

1. The neutron source is effectively a point source, and the neutron flux declines very rapidly in the subcritical actinide blanket in a manner similar to that in the fusion reactor.
2. A method for recovering the heat from the spallation device must be devised or the entire cost of the operation must be charged to the transmutation operation — a very expensive proposition.
3. This concept would require the design and construction of high-energy particle accelerators that are much larger than any built to date.
4. It would appear to be inefficient to use nuclear fission heat to make electricity, which in turn makes high-energy protons (and more energy losses from inefficiency). The proton are then used to make neutrons, which finally accomplish the transmutation. Actinide transmutation in the fission reactor seems much more straightforward and eliminates the unavoidable intermediate energy losses.
5. The handling of molten metals in a high-intensity, high-energy neutron flux at high temperatures would appear to be a formidable engineering obstacle.

Thus, the engineering and theoretical limitations of this concept would seem to greatly overshadow any possible advantages.

The final alternative transmutation process that has been proposed involves the use of nuclear explosives as the source of transmutation

neutrons. This option is discussed in more detail in ref. 26. The detonation of a nuclear device produces copious quantities of high-energy neutrons which would transmute the actinides almost instantaneously. Estimates indicate that three to four 100-kt explosive shots would be required annually per 1000-MW(e) reactor at a cost estimated to be ∿ 17% of the cost of the electricity. Ignoring the relatively high dollar cost of this concept, there are three fundamental problems:

1. The (underground) explosion would result in the residual nuclides being irretrievably encased in rock at the explosion site in a manner that may not be suitable for long-term isolation.
2. Presently, there are limitations on the testing of nuclear weapons, and further limitations are to be expected in the future.
3. The detonation of three to four 100-kt nuclear devices annually for each 1000-MW(e) nuclear reactor for waste management purposes would most certainly be socially and politically unacceptable.

Thus, although it appears to be technically feasible, the political realities, high cost, and logistical difficulties make this concept unacceptable.

6. TRANSMUTATION OF IODINE AND TECHNETIUM

The two largest contributors to the risk from a geologic repository are ^{99}Tc and ^{129}I according to the analysis conducted as a part of this program.[27] Although this is not the principal goal of the ORNL P-T program, it would appear appropriate to briefly describe the result of studies concerning the transmutation of these two nuclides.

In general, the transmutation of fission products is more easily accomplished in a thermal reactor since the flux-cross section product (i.e., reaction rate) is larger in a thermal reactor than in a fast reactor and the fission-to-capture ratio is irrelevant. Evidence of this is readily apparent in the form of the much larger poisoning

effect of the fission products in a thermal reactor than in a fast reactor. As a result, the iodine and technetium transmutation studies described herein will only consider thermal reactors, specifically uranium-enriched PWRs.

6.1 Technetium-99 Transmutation

Technetium-99 is produced as a result of the fissioning of actinides and is the only technetium isotope that is both present in significant quantities (∿700 g/MTHM) and long-lived (half-life = 213,000 years). Technetium-99 would have to be separated from the high-level waste and dissolver solids and purified in preparation for transmutation. The form of the technetium during irradiation has not been investigated, although the metal is a likely candidate since its melting point is ∿2400 K.

The spectrum-averaged capture cross section of a fuel element of ^{99}Tc metal (density = 11.5 g/cm^3) in a UO_2 fuel assembly is ∿13.8 x 10^{-28} m^2 based on the neutron flux spectrum given in ref. 23. Subsequent transmutation calculations performed using the ORIGEN[28] code and the PWR model described in ref. 23 yielded a transmutation rate of 11% per full-power year. The discharged element had the following composition per initial kilogram of ^{99}Tc: ^{99}Tc, 728 g; ^{100}Ru, 270 g; ^{101}Ru, 2.5 g; ^{102}Ru, 0.006 g.

The transmutation rate indicates that ^{99}Tc is readily transmutable in a PWR. However, two important considerations must be fully addressed before technetium transmutation can be unequivocally declared feasible: (1) the irradiation behavior of technetium and the technetium/ruthenium mixture must be determined and (2) the amount and impact of the ^{98}Tc (half-life = 4.2 million years) formed by (n,2n) reactions on ^{99}Tc must be determined.

6.2 Iodine-129 Transmutation

Iodine-129 is also a product of fissioning actinides. It has a half-life of 15.9 million years and is produced in the amount of 194 g/MTHM. It is accompanied by ∿61 g of stable ^{127}I per MTHM. In the

nuclear fuel cycle, it can be made to appear virtually quantitatively in the dissolver off-gas and can be removed with a variety of techniques such as scrubbing with caustic solutions or highly concentrated HNO_3. The form of iodine appropriate for insertion into a reactor is not clear due to the proclivity of many iodine compounds to volatilize or decompose and the corrosive nature of iodine toward virtually all metals at elevated temperatures. For calculational purposes, the sodium iodide (NaI) form has been assumed.

The spectrum-averaged capture cross sections of a fuel element containing solid NaI (75% ^{129}I and 25% ^{127}I) in a UO_2 fuel assembly are 3.12×10^{-28} m^2 for ^{129}I and 3.39×10^{-28} m^2 for ^{127}I based on the neutron flux given in ref. 23 and also on values given in ref. 5. Transmutation calculations performed with the ORIGEN[28] code and the PWR model described in ref. 23 yielded a transmutation rate of 3% per full-power year. The discharged element had the following composition per initial kilogram of iodine: ^{127}I, 221 g; ^{129}I, 704 g; ^{128}Te, 1.1 g; ^{128}Xe, 18.1 g; and ^{130}Xe, 56.2 g. The initial iodine composition was 240 g of ^{127}I and 760 g of ^{129}I.

In summary, the following problems are associated with the transmutation of ^{129}I:

1. Iodine-129 is very corrosive toward potential cladding materials.
2. Many iodine compounds are decomposed or volatile at LWR operating temperatures.
3. The xenon gas produced by the transmutation will put considerable stress on the cladding in a corrosive environment.
4. The transmutation rate is very low.

The net result of the low transmutation rate would be that at steady state, 1.5% of the reload fuel would be comprised of iodine target pins. Thus, on the basis of the four considerations listed above, it would appear that the transmutation of iodine should be considered to be marginally feasible at best.

7. FUEL CYCLE CHARACTERIZATION FOR THE P-T ASSESSMENT PROGRAM

The purpose of P-T is to reduce the long-term risk associated with the disposal of fuel cycle wastes contaminated with transuranic elements. To properly assess the value of this option, the following information is needed: (1) the design (leading to the cost) of the partitioning facilities, (2) the change in short-term (fuel cycle) risk resulting from implementation of P-T, and (3) the change in the long-term (repository) risk resulting from implementation of P-T. In all three of these areas, one of the principal inputs required is the nuclide compositions of the nuclear materials in the relevant facilities. This section characterizes two model reactor fuel cycles that have been developed as input for other portions of the P-T assessment program: a reference (no P-T) fuel cycle and a P-T fuel cycle.

7.1 Description of Fuel Cycles and Ground Rules

7.1.1 Description of reference and P-T fuel cycles

Both the reference and P-T fuel cycles are depicted schematically in Fig. 7.1. These fuel cycles are based on a single 1250-MW(e) PWR operating in the self-generated plutonium recycle mode. The fuel reprocessing plant is assumed to be producing a coprocessed product (i.e., the uranium, plutonium, and any other actinides are intimately mixed). The fuel is assumed to be in the reactor for 3 calendar years. Out-of-reactor decay times are 1.5 years between reactor discharge and reprocessing and 0.5 year between reprocessing and refabrication.

7.1.1.1 Reference fuel cycle. Referring to the left and center portions of Fig. 7.1, the reference cycle begins with the insertion of a reload of fuel into the reactor. The reload mass is 34.19 MTHM, which is comprised of two-thirds 3.2 wt % enriched UO_2 and one-third coprocessed MOX (i.e., plutonium-enriched uranium including some neptunium). This fuel is irradiated to a burnup of 33,000 MWd/MTHM, at which time it is discharged and decayed for 1.5 years. Both the UO_2 and MOX fuels are then reprocessed together, yielding (1) a coprocessed MOX product, which is sent to refabrication after a 0.5-year

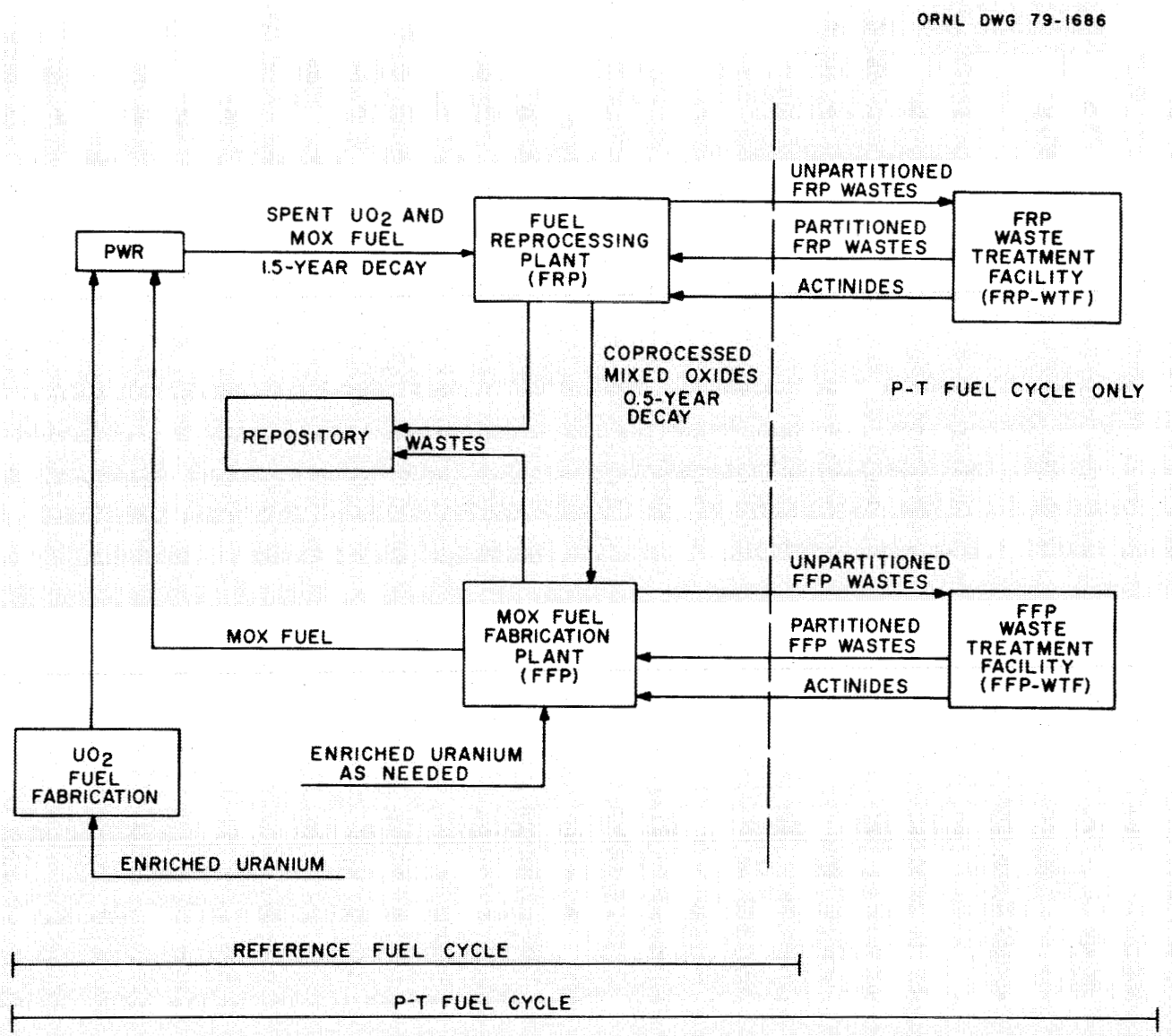

Fig. 7.1. Schematic diagram of reference and P-T fuel cycles.

delay, and (2) TRU wastes, which are sent to a repository. The MOX product, which is in powder form, is refabricated after the addition of a sufficient amount of enriched uranium to achieve the desired burnup. The TRU wastes from the refabrication of MOX fuels are sent to the repository. Simultaneously with MOX fuel refabrication, the 3.2 wt % enriched UO_2 fuel is being fabricated in a separate facility. The cycle is completed at this point, with the fabricated fuels being inserted into the reactor.

7.1.1.2 P-T fuel cycle. Again referring to Fig. 7.1, the P-T fuel cycle is basically the same as the reference fuel cycle except that partitioning facilities (the extreme right of Fig. 7.1) have been added. As before, the cycle begins with the insertion of a reload of fuel into the reactor. The reload mass is 34.19 MTHM and is comprised of two-thirds 3.2 wt % enriched UO_2 and one-third coprocessed MOX, which has all of the waste actinides (i.e., neptunium and the transplutonics) homogeneously dispersed in it. The reload is irradiated to a burnup of 33,000 MWd/MTHM, at which time it is discharged and decayed for 1.5 years. Both the UO_2 and MOX fuels are then reprocessed together. The TRU-contaminated wastes are then sent to the fuel reprocessing plant waste treatment facility (FRP-WTF) for partitioning. A stream of recovered TRU actinides and TRU-depleted wastes are returned to the reprocessing plant. The recovered TRU actinides are combined with the coprocessed MOX and sent to the refabrication plant after a 0.5-year delay. The TRU-depleted wastes are sent to the repository. The MOX product (including the waste actinides), which is in powder form, is refabricated after the addition of a sufficient amount of enriched uranium to achieve the desired burnup. The TRU wastes from refabrication are then sent to the FFP-WTF for partitioning. A stream of recovered actinides and TRU-depleted wastes are returned to the fabrication plant. The recovered actinides are incorporated with MOX recycle streams within the facility. The TRU-depleted wastes are sent to the repository. Simultaneously, the 3.2 wt % enriched UO_2 fuel is being fabricated in a separate facility. The cycle is completed at this point, with the fabricated fuels being inserted into the reactor.

7.1.2 Ground rules

7.1.2.1 Materials of interest. In the assessment of P-T, many different fuel cycle materials (e.g., fresh fuel, spent fuel, wastes) must be characterized at a variety of decay times. Since it is impossible to even partially characterize these materials in a reasonable amount of space, this report will confine itself to characterizing only the fundamental fuel cycle materials: the fresh and spent fuel compositions in both the reference and P-T fuel cycles.

7.1.2.2 Uranium composition. The composition of the enriched uranium used in making up the UO_2 and, if needed, the MOX fuel is of significant importance in determining the composition of the fresh and spent fuels. In particular, the ^{236}U composition of the enriched uranium is important since the amount of ^{237}Np in the spent fuel is a strong function of the amount of ^{236}U in the fresh fuel. The amount of ^{236}U in enriched uranium is a function of the amount and composition of the recycled uranium (the only source of ^{236}U) fed to the enrichment plants and the methods used to operate the enrichment plants. Although the ^{236}U content of currently produced enriched uranium is virtually nil, substantial amounts of this isotope would be expected in the enriched product by the time P-T could be implemented (about the year 2000). Thus, it is appropriate that a uranium composition, including a significant amount of ^{236}U, be used. Based on the projections of Ford,[29] all enriched uranium used in either the reference or P-T fuel cycle was assumed to contain 0.04% ^{234}U and 0.4% ^{236}U.

7.1.2.3 Actinides reporting to wastes. Another important fuel cycle parameter that affects the fuel-cycle material compositions is the amounts of actinides assumed to report to wastes. These unrecovered actinides are directly important since they determine the composition of the wastes going to the repository based on the fresh or spent fuel composition. They are indirectly important because the materials not reporting to the wastes are assumed to be present in the refabricated fuel. The fractions of actinides reporting to various waste types are given in Table 7.1 for the reprocessing plant (based on input spent fuel) and for the MOX fuel fabrication plant (based on input MOX).[30]

Table 7.1. Percentage of actinides reporting to final actinide wastes

Waste product	Element	Fuel reprocessing plant[a] Reference cycle	Fuel reprocessing plant[a] P-T cycle	Fuel fabrication plant[b] Reference cycle	Fuel fabrication plant[b] P-T cycle
High-level solidified waste	U	0.5	0.01		
	Np	20.0	0.01		
	Pu	0.5	0.01		
	Am	99.9	0.01		
	Cm[c]	99.9	0.01		
Cladding waste	U	0.1	0.01		
	Np	0.1	0.01		
	Pu	0.1	0.01		
	Am	0.1	0.01		
	Cm[c]	0.1	0.01		
Nonimmobilized waste	U	0.4	0.02	0.5	0.05
	Np	0.4	0.02	0.5	0.05
	Pu	0.4	0.02	0.5	0.05
	Am	0.0	0.02	0.5	0.05
	Cm[c]	0.0	0.02	0.5	0.05
Concreted waste	U	1.0	0.06	1.5	0.1
	Np	1.0	0.06	4.0	0.1
	Pu	1.0	0.06	1.5	0.1
	Am	0.0	0.06	20.0	0.1
	Cm[c]	0.0	0.06	20.0	0.1
Total	U	2.0	0.1	2.0	0.15
	Np	21.4	0.1	4.5	0.15
	Pu	2.0	0.1	2.0	0.15
	Am	100	0.1	20.5	0.15
	Cm[c]	100	0.1	20.5	0.15

[a]Based on feed to FRP.

[b]Based on feed to FFP.

[c]Values for Bk and Cf are assumed to be the same as those for Cm.

Of particular importance is the unrecovered neptunium in the reference cycle, which totals 21.4% in the reprocessing plant and an additional 4.5% in the fabrication plant. In effect, this means that 75% of the neptunium in the reference-cycle spent fuel is being recycled in the MOX fuel. This fact, along with the fact that the enriched uranium contains significant amounts of ^{236}U, serves to significantly increase the production rate of ^{238}Pu.

7.1.2.4 Recycle considered. The fact that both the reference and P-T cycles involve actinide recycle poses an interesting question: Which recycle is to be used as the basis of comparison? In many instances, the most obvious approach would be to continue calculating recycles until steady state (i.e., compositions are invariant from one recycle to the next) was attained. However, in the case of P-T in thermal reactors, steady state is not reached until the 60th recycle due to the long time required for ^{252}Cf to equilibrate.[1] The large number of recycles required to attain steady state causes two problems: (1) calculations become prohibitively expensive and time-consuming and (2) 60 recycles are equivalent to 300 years, which is an unreasonably long duration for a LWR scenario, depending heavily on natural uranium resources. As a result of these considerations, the baseline recycle for comparison purposes was taken to be the fifth recycle. The rationale for this was that, assuming P-T was implemented in LWRs in the year 2000, only $\sim$25 years (5 recycles) could reasonably be expected before uranium resources became a serious limitation. Additionally, the calculation of five recycles is achievable within a reasonable time and budget.

7.2 Calculational Methodology

The calculational methodology consisted of two principal steps. The first step was to perform relatively sophisticated reactor physics calculations to characterize the neutron spectrum and cross sections during irradiation as a function of recycle. Due to the detailed neutronics treatment, these calculations only consider the principal

materials in the reactor (i.e., actinides, structural materials, moderator). However, since the risk analyses require much more detailed information, a second step is required. This involves the use of a less sophisticated reactor physics calculation that provides detail on many nuclides in a format and units convenient for engineering analysis.

7.2.1 Sophisticated reactor physics calculations

7.2.1.1 Reference cycle. The reference-cycle reactor calculations were performed as a part of the ORIGEN update program. These calculations were described in detail in ref. 20. Basically, these calculations involved performing static, one-dimensional 84-neutron-energy-group spectrum calculations for fuel compositions typical of different burn-ups. The results of these calculations were five-group cross section sets. These cross section sets were used in a reactor depletion calculation for four reactors, one of which was a self-generated plutonium-recycle PWR, which is the reference reactor. The results of the depletion calculation plus the 84-group spectrum calculation were used to supply effective one-group cross sections to subsequent ORIGEN calculations providing the detailed composition of the fuel cycle materials.

7.2.1.2 P-T cycle. The sophisticated P-T cycle reactor physics calculations were performed by Gorrell as a part of the ORNL P-T program. In particular, the calculations were those for Case 2.2 of ref. 5, where a detailed description can be found. The basic procedure used was the same as that in the reference case: static, one-dimensional multigroup neutron spectrum calculations followed by depletion calculations using cross sections from the spectrum calculation. In the case of the P-T cycle, these calculations are all performed with a single reactor physics code, called GLASS.[31] These calculations explicitly accounted for the recycle of the actinides for five cycles. The amount of enriched uranium makeup required for the MOX fuel assemblies was based on the EOC reactivity. The results of these calculations were used to supply effective, one-group cross sections to

subsequent calculations providing the detailed compositions of the P-T fuel-cycle material compositions.

7.2.2 Calculation of detailed fuel-cycle material compositions

All of the detailed calculations of the fresh-fuel and spent-fuel compositions were performed using an updated version of the ORIGEN computer code.[28] This code provides the detailed nuclide composition of the fuel that is necessary to perform subsequent facility designs and risk analyses in a variety of forms convenient for engineering analysis.

The cross sections used for the reference cycle were those developed as a result of the effort to update ORIGEN. These same cross sections were used for all five recycles. In the case of the P-T cycle, the cross sections developed by the ORIGEN update effort for the plutonium-recycle PWR were used for only the first two recycles. At that point, the cross sections developed by Gorrell were incorporated and used for the remaining three recycles. The enriched uranium makeup requirements for the MOX fuel that were developed by Gorrell were used throughout. The results predicted by ORIGEN were found to agree very well with those of Gorrell, except where fuel cycle assumptions were altered (e.g., the amount of ^{236}U in the enriched uranium).

The compositions of the wastes were also calculated by ORIGEN by simply decaying the fresh fuel or spent fuel for the required time and then applying the factors given in Table 7.1.

7.3 Reference and P-T Fuel Characteristics

The composition and activity of the reference and P-T fuels, both fresh and spent, are given in Table 7.2. The values given in this table were based on the assumptions and input data described in Sects. 7.1 and 7.2.

Table 7.2. Composition and characteristics of fresh and spent reference and P-T fuels

	Fresh MOX fuels[a]		Spent MOX fuels[b]	
	Reference	P-T	Reference	P-T
	Composition, g/MTHM			
^{235}U	6,938	6,768	3,846	3,517
^{236}U	6,853	6,829	6,409	5,846
^{238}U	918,200	907,600	900,200	883,800
^{237}Np	4,284	2,576	3,599	2,827
^{238}Pu	5,241	4,442	5,473	5,260
^{239}Pu	24,230	25,670	13,830	17,600
^{240}Pu	16,650	17,880	13,360	14,870
^{241}Pu	9,530	9,203	7,675	7,925
^{242}Pu	7,286	10,400	7,071	11,070
^{241}Am	463	1,535	1,197	1,388
^{243}Am	0	2,749	2,408	2,923
^{242}Cm	0	28	15	26
^{244}Cm	0	3,478	941	4,526
^{245}Cm	0	484	54	813
^{246}Cm	0	215	24	332
^{247}Cm	0	13	0.14	25
^{248}Cm	0	2.8	3.4 E-03	6.2
^{249}Bk	0	6.9 E-04	8.3 E-06	6.7 E-02
^{249}Cf	0	6.2 E-03	2.3 E-05	0.21
^{250}Cf	0	1.5 E-03	4.2 E-06	6.8 E-02
^{251}Cf	0	2.5 E-04	3.7 E-07	1.0 E-02
^{252}Cf	0	2.7 E-04	1.4 E-07	2.1 E-02
Neutron activity, neutrons^{-1} MTHM^{-1}	1.84 E+08	4.16 E+08	1.19 E+10	1.05 E+11
Dose rate from one assembly, rem/hr[c]	0.17	11.2	11,900	11,900
Decay heat, W/MTHM	3,250	12,440	12,970	23,170

[a]Decay of 0.5 year assumed.

[b]Decay of 1.5 years assumed.

[c]Dose is 1.0 m from the assembly midplane.

8. REFERENCES

1. A. G. Croff et al., A Preliminary Assessment of Partitioning and Transmutation as a Radioactive Waste Management Concept, ORNL/TM-5808 (September 1977).
2. G. Andersson, Recycling of Transuranium Nuclides Containing Residues of Yttrium and Lanthanides, TPM-RF-76-1206, AB Atomenergi, Studsvik, Sweden (1976).
3. T. C. Gorrell, Transmutation of Waste Actinides in Thermal Reactors: Survey Calculations of Candidate Irradiation Schemes, DP-1496 (November 1978).
4. G. Oliva and L. Tondinelli, Neutronics Aspects of the Recycling of Transuranium Elements by Burnup in an Actual Light Water Reactor, RT/FI(78)21, CNEN (November 1978).
5. T. C. Gorrell, Transmutation of Waste Actinides in Light-Water Reactors, DP-1518 (April 1979).
6. R. Gasteiger, Development of an Irradiation Technology for the Recycling of Am-241 in Nuclear Reactors--A Contribution to the Possibilities for Reducing the Hazard Potential of Alpha-Bearing Wastes, KFK-2431; ORNL-tr-4585 (1977).
7. D. J. Murphy, Jr., W. M. Farr, and B. D. Ganapol, "Power Production and Actinide Elimination by Fast Reactor Recycle," Nucl. Tech. 45(3), 299-306 (October 1979).
8. R. L. Engel and D. E. Deonigi, Evaluations of Fusion-Fission (Hybrid) Concepts: Market Penetration Analysis for Fusion-Fission Hybrids, prepared by Battelle Pacific Northwest Laboratories for Electric Power Research Institute, EPRI ER-469 (1976).
9. D. H. Berwald and J. J. Duderstadt, "Preliminary Design and Neutronic Analysis of a Laser Fusion Driven Actinide Waste Burning Hybrid Reactor," Nucl. Tech. 42, 34-50 (January 1979).
10. T. A. Parish, "A Neutronic Assessment of Strontium-90 Transmutation in Fusion Reactors," Nucl. Tech. 42(2), 180-94 (February 1979).

11. G. A. Harte and R. H. Clarke, An Investigation into the Use of a Fast Breeder Reactor to Incinerate Actinide Waste from the U.K. Nuclear Power Programme, CEGB-RD/B/N-3903 (December 1976).

12. J. J. Prabulos, Recycling of Trans-Uranium Actinides in a 1500 MWE Carbide LMFBR, Combustion Engineering, Inc., CE-FBR-76-352 (1976).

13. M. Taube, "The Transmutation of Strontium-90 and Cesium-137 in a High-Flux Fast Reactor with a Thermalized Central Region," Nucl. Sci. Eng. 61, 212-21 (1976).

14. T. H. Pigford and J. Choi, Trans. Am. Nucl. Soc. 27, 450-51 (November 1977).

15. E. Zamorani, Surface Dose Rate Contribution by Actinides Mixed in Uranium-Plutonium Fuel Elements, EUR 5917 e, JRC, Ispra, Italy (1977).

16. T. C. Gorrell, "Transmutation of Waste Actinides in Thermal Reactors," Trans. Am. Nucl. Soc. 32, 392-93 (June 1979).

17. G. Oliva, G. Palmiotti, M. Salvatores, and L. Tondinelli, "Elimination of Transuranium Elements by Burnup in a Power Fast Breeder Reactor," Nucl. Tech. 37, 340-52 (March 1978).

18. M. L. Williams, J. W. McAdoo, and G. F. Flanagan, Preliminary Neutronic Study of Actinide Transmutation in a Fast Reactor, ORNL/TM-6309 (August 1978).

19. T. A. Parish and J. W. Davidson, "Reduction in the Toxicity of Fission Product Wastes through Transmutation with Deuterium-Tritium Fusion Neutrons," Nucl. Tech. 47(2), 324-42 (February 1980).

20. A. H. Robinson, G. W. Shirley, A. W. Prichard, and T. J. Trapp, "Burning Actinides in Very Hard Spectrum Reactors," Trans. Am. Nucl. Soc. 30, 289-90 (November 1978).

21. S. L. Beaman, Actinide Recycle in LMFBRs as a Waste Management Alternative, GEFR-00482 (August 1979).

22. C. W. Alexander and A. G. Croff, Actinide Partitioning-Transmutation Program Final Report. IV. Miscellaneous Aspects, ORNL/TM-6983 (in preparation).

23. A. G. Croff, M. A. Bjerke, G. W. Morrison, and L. M. Petrie, Revised Uranium-Plutonium Cycle PWR and BWR Models for the ORIGEN Computer Code, ORNL/TM-6051 (September 1978).

24. A. G. Croff and J. W. McAdoo, LMFBR Models for the ORIGEN Computer Code, ORNL/TM-7176 (to be published).

25. R. P. Rose, Fusion-Driven Actinide Burner Design Study, EPRI ER-451 (May 1976).

26. K. J. Schneider and A. M. Platt, High-Level Radioactive Waste Management Alternatives, Sects. 9.B and 9.E, BNWL-1900 (May 1974).

27. S. E. Logan, R. L. Conarty, H. S. Ng, L. J. Rahal, and C. G. Shirley, Actinide Partitioning-Transmutation Program Final Report. VII. Long-Term Risk Analysis of the Geologic Repository, ORNL/TM-6987 (in preparation).

28. ORIGEN2 — A Revised and Updated Version of the Oak Ridge Isotope Generation and Depletion Code, ORNL-5621 (to be published).

29. J. S. Ford, "The Buildup of ^{236}U in Gaseous Diffusion Plant Product," in The Proceedings of the Uranium Enrichment Conference, CONF-751134, Oak Ridge, Tenn., Nov. 11, 1975.

30. D. W. Tedder, B. C. Finney, and J. O. Blomeke, Actinide Partitioning-Transmutation Program Final Report. II. Partitioning Processes for LWR Fuel Reprocessing and Refabrication Plant Wastes, ORNL/TM-6982 (in preparation).

31. H. C. Honeck, The JOSHUA System, DP-1380 (1975).

ORNL/TM-6983
Dist. Category UC-70

INTERNAL DISTRIBUTION

1. C. W. Alexander
2. D. E. Bartine
3. J. E. Bigelow
4. J. O. Blomeke
5. W. D. Bond
6. W. D. Burch
7. W. L. Carter
8. H. C. Claiborne
9. E. L. Compere
10-14. A. G. Croff
15. J W. T. Dabbs
16. W. Davis, Jr.
17. J. K. Dickens
18-22. D. E. Ferguson
23. B. C. Finney
24. G. F. Flanagan
25. C. W. Forsberg
26. E. J. Frederick
27. R. W. Glass
28. F. E. Harrington
29. O. L. Keller
30. R. E. Leuze
31. A. L. Lotts
32. R. A. Lorenz
33. R. S. Lowrie
34. F. C. Maienschein
35. A. P. Malinauskas
36. J. W. McAdoo
37. J. D. McGaugh
38. J. R. Parrott, Sr.
39. R. W. Peele
40. S. Raman
41. C. D. Scott
42. L. B. Shappert
43. M. G. Stewart
44. I. Spiewak
45. P. H. Stelson
46. N. D. Vaughan
47. B. L. Vondra
48-52. J. W. Wachter
53. C. R. Weisbin
54. L. W. Weston
55. M. L. Williams
56. R. G. Wymer
57-58. Laboratory Records
59. Laboratory Records, R. C.
60. Document Reference Section
61-62. Central Research Library
63. ORNL Patent Section
64. W. H. Corcoran (consultant)
65. Radiation Shielding Information Center

EXTERNAL DISTRIBUTION

DOE-ORO, Oak Ridge, TN 37830
66. Office of Assistant Manager for Energy Research and Development
67. D. E. Large

DOE, Washington, DC 20545
68. P. B. Hemmig
69. G. K. Oertel
70. R. D. Walton

Battelle Pacific Northwest Laboratory, P.O. Box 999, Richland, WA 99352
71. A. M. Platt
72. E. J. Merrill

Argonne National Laboratory, 9700 South Cass Ave., Argonne, IL 62439
73. M. J. Steindler

Sandia Laboratories, P.O. Box 5800, Albuquerque, NM 87115
74. S. A. Dupree

E.I. du Pont de Nemours and Company, Savannah River Laboratory,
Aiken, SC 29801
75. J. L. Crandall
76. T. C. Gorrell

Los Alamos Technical Associates, P.O. Box 410, 1553 Myrtle St.,
Los Alamos, NM 87544
77. S. E. Logan

General Electric Co., Mail Code S-34, P.O. Box 5020, Sunnyvale, CA 94086
78. S. L. Beaman

Battelle Columbus Laboratories, Office of Nuclear Waste Isolation,
505 King Ave., Columbus, OH 43201
79. R. Best
80. M. Pobereskin

Allied-Gulf Nuclear Services, P.O. Box 847, Barnwell, SC 29812
81. A. K. Williams

Atomic Energy Research Establishment, Harwell, Didcot, Oxon.,
OX11 ORA, England
82. J. R. Grover

National Radiation Protection Board, Harwell, Didcot, Oxon.,
OX11 ORA, England
83. G. N. Kelley

Centre d'études nucléaiers de Fontenay-aux-Roses, B. P. No. 6,
Fontenay-aux-Roses, France
84. Y. Sousselier

OECD-Nuclear Energy Agency, 38, Boulevard Suchet, F-75016
Paris, France
85. F. Gera

International Atomic Energy Agency, P.O. Box 590, A-1011 Vienna, Austria
86. E. R. Irish

Lab. Teoria e Calcolo Reottori, C.N.E.N.-C.S.N. Casaccia, CP 2400,
I-00100 Rome, Italy
87. L. Tondinelli

Institut für Heisse Chemie Kernforschungszentrum, Postfach 3640, 75
Karlsruhe, Germany
88. H. O. Haug

Commission of the European Communities, CEC, JRC, I-21200 Ispra, Italy
89. F. Girardi
90. W. Hage

Chalmers University of Technology, Dept. of Nuclear Chemistry,
S-402 20 Göteborg, Sweden
91. J. O. Liljenzin

Studsvik, AB Atomenergi, Fack, S-611 01, Nyköping 1, Sweden
92. E. Hellstrand

Cadarach, B.P. No. 1, 13115 Sant-Paul-lez-Durance, France
93. J. Bouchard

DOE-SRO, P.O. Box A, Aiken, SC 29801
94. E. S. Goldberg
95. T. B. Hindman

Lawrence Livermore Laboratory, P.O. Box 808, Livermore, CA 94550
96. M. Coops

Science Applications, Inc., 5 Palo Alto Square, Suite 200,
Palo Alto, CA 94304
97. R. R. Fullwood

Oregon State University, Department of Nuclear Engineering,
Corvallis, OR 97331
98. B. I. Spinrad

University of California, Berkeley, Department of Nuclear Engineering,
Berkeley, CA 94720
99. T. H. Pigford

University of Texas at Austin, Austin, TX 78712
100. J. W. Davidson

Ralph M. Parsons Company, Power Division, 100 W. Walnut St.,
Pasadena, CA 91124
101. A. E. Smith

Bechtel National, Inc., 50 Beale St., P.O. Box 3965, San Francisco, CA 94119
102. G. H. Dyer

Electric Power Research Institute, 3412 Hillview Ave., Palo Alto, CA 94304
103. F. L. Culler
104. J. P. Nichols

Georgia Institute of Technology, Atlanta, GA 30332
105. D. W. Tedder

Brookhaven National Laboratory, Upton, NY 11973
106. M. Steinberg

107-430. Given distribution as shown in TID-4500 under UC-70,
Nuclear Waste Management category (25 copies - NTIS)

☆U.S. GOVERNMENT PRINTING OFFICE: 1980-640-245/182