OAK RIDGE NATIONAL LABORATORY LIBRARIES
3 4456 0554146 5

ORNL/CSD/TM-127

UCC-ND

NUCLEAR DIVISION

UNION CARBIDE

Generalized Perturbation Theory Using Two-Dimensional, Discrete Ordinates Transport Theory

R. L. Childs

OAK RIDGE NATIONAL LABORATORY
CENTRAL RESEARCH LIBRARY
CIRCULATION SECTION
4500N ROOM 175
LIBRARY LOAN COPY
DO NOT TRANSFER TO ANOTHER PERSON
If you wish someone else to see this report, send in name with report and the library will arrange a loan.
UCN-7969 3 9-77

OPERATED BY
UNION CARBIDE CORPORATION
FOR THE UNITED STATES
DEPARTMENT OF ENERGY

Printed in the United States of America. Available from
National Technical Information Service
U.S. Department of Commerce
5285 Port Royal Road, Springfield, Virginia 22161
NTIS price codes—Printed Copy: A07; Microfiche A01

This report was prepared as an account of work sponsored by an agency of the United States Government. Neither the United States Government nor any agency thereof, nor any of their employees, makes any warranty, express or implied, or assumes any legal liability or responsibility for the accuracy, completeness, or usefulness of any information, apparatus, product, or process disclosed, or represents that its use would not infringe privately owned rights. Reference herein to any specific commercial product, process, or service by trade name, trademark, manufacturer, or otherwise, does not necessarily constitute or imply its endorsement, recommendation, or favoring by the United States Government or any agency thereof. The views and opinions of authors expressed herein do not necessarily state or reflect those of the United States Government or any agency thereof.

ORNL/CSD/TM-127

GENERALIZED PERTURBATION THEORY USING TWO-DIMENSIONAL, DISCRETE ORDINATES TRANSPORT THEORY

R. L. Childs

(Sponsor: G. E. Whitesides)

Date Published - June 1980

COMPUTER SCIENCES DIVISION
at
Oak Ridge National Laboratory
Post Office Box X
Oak Ridge, Tennessee 37830

Union Carbide Corporation, Nuclear Division
operating the
Oak Ridge Gaseous Diffusion Plant • Paducah Gaseous Diffusion Plant
Oak Ridge Y-12 Plant • Oak Ridge National Laboratory
under Contract No. W-7405-eng-26
for the
Department of Energy

OAK RIDGE NATIONAL LABORATORY LIBRARIES
3 4456 0554146 5

TABLE OF CONTENTS

		PAGE
LIST OF TABLES		v
LIST OF FIGURES		vii
ACKNOWLEDGMENTS		ix
ABSTRACT		xi
I.	INTRODUCTION	1
II.	NEUTRON TRANSPORT THEORY BACKGROUND	4
III.	PERTURBATION THEORY FOR SOURCE PROBLEMS	8
IV.	PERTURBATION THEORY FOR THE EIGENVALUE PROBLEM	13
V.	GENERALIZED PERTURBATION THEORY FOR LINEAR RATIOS	17
VI.	GENERALIZED PERTURBATION THEORY FOR BILINEAR RATIOS	24
VII.	EIGENFUNCTION EXPANSIONS FOR GENERALIZED FUNCTIONS	29
VIII.	DISCUSSION OF GENERALIZED PERTURBATION THEORY	36
IX.	AN ANALYTIC EXAMPLE USING GENERALIZED PERTURBATION THEORY	41
X.	COMPUTATIONAL PROCEDURES FOR GENERALIZED FUNCTIONS	49
XI.	NUMERICAL EVALUATION OF PERTURBATION EQUATIONS	54
XII.	THE DEMONSTRATION PROBLEM	61
XIII.	DEMONSTRATION PERTURBATION CALCULATIONS FOR CHANGES IN THE EIGENVALUE	67
XIV.	DEMONSTRATION GENERALIZED PERTURBATION CALCULATIONS FOR LINEAR RATIOS	76
XV.	DEMONSTRATION GENERALIZED PERTURBATION CALCULATIONS FOR BILINEAR RATIOS	85
XVI.	CALCULATION OF HIGHER EIGENFUNCTIONS	93
XVII.	OUTER ITERATION CONVERGENCE FOR GENERALIZED FUNCTIONS	102
XVIII.	SUMMARY AND CONCLUSIONS	106
LIST OF REFERENCES		109

LIST OF TABLES

TABLE		PAGE
IX-1.	Exact and Linear Results for $\delta\lambda$.	43
IX-2.	Exact and Linear Results for $\delta R/R$.	47
XII-1.	Energy Boundaries for the Four-Group Library	63
XII-2.	Compositions for the Calculational Model	65
XII-3.	Diffusion Calculations for k	65
XII-4.	DOT IV Calculations for k.	65
XIII-1.	Fluxes at the Center of the Core	67
XIII-2.	DOT-IV Eigenvalue Calculations	72
XIII-3.	Comparison of Worths from Direct Calculations and Linear Perturbation Theory.	73
XIII-4.	Comparison of Worths from Linear Perturbation Theory and Central Difference Direct Calculations.	74
XIII-5.	Contributions to the Perturbation Results for Worth.	74
XIII-6.	Variation of the Perturbation Prediction With Legendre Order	75
XIV-1.	The Generalized Source for the Reaction-Rate Ratio	76
XIV-2.	Direct Calculations of the Reaction-Rate Ratio	83
XIV-3.	Changes in Reaction-Rate Ratios Calculated Using Perturbation Theory and Direct Calculations	83
XIV-4.	Changes in Reaction-Rate Ratios Calculated Using Perturbation Theory and Central Difference Direct Calculations.	83
XV-1.	The Point Generalized Sources for Central ^{239}Pu Worth.	85
XV-2.	Central Worths for ^{239}Pu	91
XV-3.	A Comparison of Calculated Values for Changes in Worth	92
XVI-1.	The First Few k Eigenvalues.	95
XVII-1.	Convergence of Γ with Outer Iteration Number	105

LIST OF FIGURES

FIGURE		PAGE
XII-1.	The R-Z Model for the Carbide Benchmark	62
XIII-1.	Plots of ϕ and ϕ^* for Group 1	68
XIII-2.	Plots of ϕ and ϕ^* for Group 2	69
XIII-3.	Plots of ϕ and ϕ^* for Group 3	70
XIII-4.	Plots of ϕ and ϕ^* for Group 4	71
XIV-1.	Plots of the Reaction-Rate Ratio Γ^* for Group 1	78
XIV-2.	Plots of the Reaction-Rate Ratio Γ^* for Group 2	79
XIV-3.	Plots of the Reaction-Rate Ratio Γ^* for Group 3	80
XIV-4.	Plots of the Reaction-Rate Ratio Γ^* for Group 4	81
XV-1.	Plots of Γ and Γ^* for Worth in Group 1	87
XV-2.	Plots of Γ and Γ^* for Worth in Group 2	88
XV-3.	Plots of Γ and Γ^* for Worth in Group 3	89
XV-4.	Plots of Γ and Γ^* for Worth in Group 4	90
XVI-1.	Plots of f and f*	96
XVI-2.	Plots of f_1 and f_1^*	97
XVI-3.	Plots of f_2 and f_2^*	98
XVI-4.	Plots of f_3 and f_3^*	99
XVI-5.	Plots of f_4 and f_4^*	100

ACKNOWLEDGMENTS

The author would like to thank the chairman of his committee, Dr. J. C. Robinson, and the other members of the committee for their interest in this work and their contributions to its completion. Mr. W. A. Rhoades provided invaluable assistance in the modification of the computer program DOT IV. Dr. C. R. Weisbin arranged funding for this work and also arranged a trip to Argonne National Laboratory to visit the ZPR facility where the Carbide Benchmark experiment was performed. The manuscript was prepared by Billie Ferguson. All of these contributions are greatly appreciated.

The author wishes to express appreciation for the support and use of the facilities of the Computer Sciences Division, Union Carbide Corporation-Nuclear Division, operated for the U. S. Department of Energy under contract W-7405-eng-26.

ABSTRACT

Perturbation theory for changes in linear and bilinear functionals of the forward and adjoint fluxes in a critical reactor has been implemented using two-dimensional discrete ordinates transport theory. The computer program DOT IV was modified to calculate the generalized functions Γ and Γ^*. Demonstration calculations were performed for changes in a reaction-rate ratio and a reactivity worth caused by system perturbations. The perturbation theory predictions agreed with direct calculations to within about 2%. A method has been developed for calculating higher λ eigenvalues and eigenfunctions using techniques similar to those developed for generalized functions. Demonstration calculations have been performed to obtain these eigenfunctions.

CHAPTER I

INTRODUCTION

In reactor physics and shielding analysis there are many applications in which the change in a performance parameter caused by a perturbation (change) in the calculational model is determined. An extensive methodology known as perturbation theory has been developed for this class of problems. The first application of perturbation theory in reactor calculations is attributed to E. P. Wigner.[1]

Chapters III through VI of this work review several time-independent perturbation theory formulations. The perturbation equations are derived using the difference flux method. The difference flux method results in straightforward derivations in which the same steps are followed for each case considered. It is also relatively easy to identify the approximations that are made and to determine the physical significance of the terms in the perturbation equations using the difference flux method.

The first case considered is the class of problems in which a source is present and the performance parameters of interest depend upon the resulting flux. Examples of this class of problems are shielding problems and criticality surveillance applications. Perturbation equations can be used to predict the changes in the performance parameters resulting from perturbations such as a modification to a shield or the addition of a fuel bundle to a reactor core.

The second case considered is a class of problems related to a critical reactor in which no inhomogeneous source is present. This is the λ eigenvalue problem in which the value of λ is unity for critical systems,

less than unity for supercritical systems, and greater than unity for subcritical systems. Perturbation equations can be used to predict the change in λ resulting from modifications to the system.

The third case considered is the class of problems in which the performance parameter is a ratio of reaction rates based on the flux in a critical reactor. Examples of these "linear ratios" are breeding ratio or the ratio of experimentally determined reaction rates. Perturbation theory can be used to predict the change in linear ratios resulting from perturbations to the system.

The fourth case considered is the class of problems in which the performance parameter is a ratio of functionals of the forward and adjoint flux in a critical reactor. The most common example of these "bilinear ratios" is the worth of a sample to the reactivity of a reactor. Worth is ordinarily calculated using the perturbation theory for changes in the eigenvalue λ. The change in the worth of a sample caused by a perturbation can be predicted using perturbation theory.

The perturbation theory for linear or bilinear ratios in a critical system is often called "generalized perturbation theory." Similarly, eigenvalue perturbation theory is sometimes called "ordinary perturbation theory." Generalized perturbation theory requires the calculation of "generalized functions" which have rather special properties and present difficulties for numerical solutions which are not present in the eigenvalue or shielding cases.

A chapter describing λ eigenfunction expansions is included. Eigenfunction expansions are useful in understanding generalized functions and in understanding the convergence of numerical methods.

Previous work by a number of people including Usachev,[2] Gandini,[3] and Stacey[4] have developed generalized perturbation theory methods using diffusion theory. Work at Oak Ridge, lead by Oblow,[5] applied generalized perturbation theory to one-dimensional applications using the discrete ordinates transport theory computer code ANISN.[6] The purpose of the work described here is to develop numerical methods for generalized perturbation theory using the two-dimensional discrete ordinates transport program DOT-IV.[7] Methods are developed for calculating generalized functions and also higher eigenfunctions. Demonstration problems are solved for a reaction-rate ratio and a worth problem.

CHAPTER II

NEUTRON TRANSPORT THEORY BACKGROUND

In this chapter, a few topics from neutron transport theory are reviewed. The purpose of this review is to establish notation and to introduce relationships to be used in the chapters to follow.

Consider the following time-independent form of the Boltzmann transport equation:

$$\begin{aligned} &\bar{\Omega} \cdot \bar{\nabla}\phi(\bar{r},E,\bar{\Omega}) + \Sigma(\bar{r},E)\ \phi(\bar{r},E,\bar{\Omega}) = \\ &\frac{\chi(E)}{4\pi} \iint \nu\Sigma_f(\bar{r},E')\ \phi(\bar{r},E',\bar{\Omega}')\ dE'd\bar{\Omega}' + \\ &\iint \Sigma_s(\bar{r};E',\bar{\Omega}'\rightarrow E,\bar{\Omega})\ \phi(\bar{r},E',\bar{\Omega}')\ dE'd\bar{\Omega}' + S(\bar{r},E,\bar{\Omega}) \quad . \end{aligned} \tag{2.1}$$

A derivation of Eq. (2.1) can be found in a number of textbooks including those by Bell and Glasstone[8] and Henry.[9] The symbols used in Eq. (2.1) have their usual definitions which may be found in Refs. 8 and 9. In Eq. (2.1), the neutron flux, $\phi(\bar{r},E,\bar{\Omega})$, is a function of continuous variables in space, energy, and direction. In the applications to be presented in later chapters, numerical solutions for the neutron flux will be obtained using the computer program DOT IV.[7] DOT IV obtains the solution to a multigroup form of the transport equation using the method of discrete ordinates.[7,8,10] The method of discrete ordinates is a numerical technique which obtains an iterative solution for a set of coupled difference equations. This approximate solution approaches the solution to the continuous equation as the space, energy, and space meshes are refined. The discrete ordinates equations may be regarded as a matrix equation in which the size of the matrix is often very large. Actually

the equations can be written in matrix form only if certain supplementary equations such as the linear model or the step model are used.[10]

The following operator notation will be used to represent the transport equation:

$$H\phi = S \tag{2.2}$$

$$\text{or } A\phi - B\phi = S. \tag{2.3}$$

In Eq. (2.3), the B operator represents the fission process, and the A operator represents the other terms in the transport equation. The abstract notation used in Eqs. (2.2) and (2.3) allows these equations to represent the continuous energy form of Eq. (2.1), the discrete ordinates equations, or any other flux solution method such as diffusion theory or the P_1 method. The perturbation equations presented in later chapters may be applied for each of these different interpretations of Eqs. (2.2) and (2.3). The fact that ϕ is a function of space, energy, and direction is implied but not shown in the operator notation used here. The deceptively simple operator notation shortens the derivations of the perturbation equations in later chapters. Some of the perturbation equations are fairly long even using this notation.

The concept of an adjoint operator[8] will be used extensively in later chapters. (The adjoint operator is not the same as the adjoint matrix, and these different meanings of the word "adjoint" sometimes cause confusion.) The defining relationship for the adjoint operator is:

$$\langle \phi^* H \phi \rangle = \langle \phi H^* \phi^* \rangle + \text{boundary terms} \quad , \tag{2.4}$$

where H^* is the operator adjoint to H and the braces <> represent integration over space, energy, and angle phase space. For this work, H will always represent a transport equation operator, although in general H can

be any linear operator. The functions ϕ and ϕ^* in Eq. (2.4) have been limited to solutions of transport equations, since this is sufficient for the applications to be considered. Equation (2.4) is also valid under more general conditions. In Eq. (2.4) ϕ is the solution to equations similar to Eq. (2.2), while ϕ^* is the solution to equations similar to

$$H^*\phi^* = S^* \quad . \tag{2.5}$$

Equation (2.5) is the adjoint transport equation[8] and can be derived directly from physical principles based upon importance or from the definition of the adjoint operator in Eq. (2.4). The expanded form of the operator H^* may be found in Ref. 8.

When Eq. (2.2) represents a form of the transport equation in which ϕ is a continuous function in space (either continuous energy or multigroup), the $\overline{\Omega}\cdot\overline{\nabla}\phi$ term results in a surface integral in Eq. (2.4) which vanishes when boundary conditions are applied.[8] For the discrete ordinates equations, Eq. (2.4) is exact only when the supplementary equations mentioned earlier result in a linear operator.[10]

Equation (2.3) is a form of the transport equation which contains a source S which is independent of the flux. Another time-independent form of the transport equation is the eigenvalue equation

$$A\phi - \lambda B\phi = 0 \quad , \tag{2.6}$$

where $\lambda = \frac{1}{k}$ and k is the effective multiplication factor. Equation (2.6) is known as the λ or k eigenvalue equation. When k equals 1, Eq. (2.6) represents a critical reactor, and the eigenfunction ϕ represents the flux in the critical reactor. If k is greater than 1, the reactor is

supercritical, while if k is less than 1, the reactor is subcritical. The equation adjoint to Eq. (2.6) is

$$A^*\phi^* - \lambda B^*\phi^* = 0 \quad , \tag{2.7}$$

where

$$\langle\phi^* A\phi\rangle = \langle\phi A^*\phi^*\rangle \tag{2.8}$$

and

$$\langle\phi^* B\phi\rangle = \langle\phi B^*\phi^*\rangle \quad . \tag{2.9}$$

Equation (2.6) will be referred to as the "forward" λ eigenvalue equation, and ϕ will be referred to as the forward eigenfunction; while Eq. (2.7) will be referred to as the adjoint λ eigenvalue equation, and ϕ^* will be referred to as the adjoint eigenfunction. The topic of eigenfunction expansions will be discussed in Chapter VII.

CHAPTER III

PERTURBATION THEORY FOR SOURCE PROBLEMS

The purpose of this chapter is to derive perturbation equations for inhomogeneous source problems. Two examples of this class of problems are shielding and subcriticality surveillance applications.

Using the operator notation introduced in Chapter II, the transport equation is

$$H\phi = S \quad . \tag{3.1}$$

Consider a design parameter R which can be defined by an equation of the form

$$R = \langle S^*\phi \rangle \quad . \tag{3.2}$$

One example of a physical situation that can be represented by Eq. (3.2) is a neutron detector. In this case, R would represent the detector reading, and S* would be the detector response function. The system described by Eqs. (3.1) and (3.2) will be referred to as the reference state.

Now consider an altered physical system described by

$$H'\phi' = S \tag{3.3}$$

$$\text{and} \quad R' = \langle S^*\phi' \rangle \quad . \tag{3.4}$$

This system will be referred to as the perturbed state. The prime symbol will be used throughout this work to indicate a perturbed state. The convention to be used to relate the reference and perturbed states is illustrated by the following example

$$\phi' = \phi + \delta\phi \quad , \tag{3.5}$$

$$H' = H + \delta H \quad , \tag{3.6}$$

$$\text{and} \quad R' = R + \delta R \quad . \tag{3.7}$$

This convention will be maintained throughout this work. $\delta\phi$ in Eq. (3.5) is known as the difference flux.[11] δH is referred to as the perturbation operator. δR is the change in the design parameter of interest and is given by

$$\delta R = R' - R = \langle S^* \delta\phi \rangle \quad . \tag{3.8}$$

In this equation, S^* is an importance function which relates changes in the flux to changes in R.

One method of calculating δR is to obtain ϕ and ϕ' by solving Eqs. (3.1) and (3.3), calculate R and R' using Eqs. (3.2) and (3.4), and subtract to obtain δR. This method for obtaining δR will be called the direct calculation method.

In order to develop a perturbation equation for δR, Eq. (3.3) is rewritten as

$$H\phi + H\delta\phi + \delta H\phi' = S \quad . \tag{3.9}$$

This result is easily verified using Eqs. (3.5) and (3.6) and noting that H and δH are linear operators. Subtracting Eq. (3.1) from Eq. (3.9) yields

$$H\delta\phi = -\,\delta H\phi' \quad . \tag{3.10}$$

Equation (3.10) is a transport equation for $\delta\phi$.

Equation (3.8) can be rewritten as

$$\delta R = \langle \delta\phi H^* \phi^* \rangle \tag{3.11}$$

by making the definition

$$H^*\phi^* = S^* \quad . \tag{3.12}$$

Using the definition of the adjoint operator, Eq. (3.11) becomes

$$\delta R = \langle \phi^* H \delta\phi \rangle \quad . \tag{3.13}$$

The boundary conditions for Eq. (3.12) are chosen to insure that Eq. (3.13) contains no boundary term contribution. Substituting Eq. (3.10) into Eq. (3.13) yields the following exact result

$$\delta R = - \langle \phi^* \delta H \phi' \rangle \quad . \tag{3.14}$$

Interchanging the definition of the reference and perturbed states yields another exact result

$$\delta R = - \langle \phi^{*\prime} \delta H \phi \rangle \quad . \tag{3.15}$$

Equation (3.15) is the basis of the adjoint difference method.[12]

Equation (3.14) can be written as

$$\delta R = - \langle \phi^* \delta H \phi \rangle - \langle \phi^* \delta H \delta\phi \rangle \quad . \tag{3.16}$$

Neglecting the second term (which is second order) yields the linear (or first order) perturbation equation

$$\delta R \approx - \langle \phi^* \delta H \phi \rangle \ . \tag{3.17}$$

Equation (3.17) has been used for a wide variety of applications. Note that only ϕ and ϕ^* need be obtained and a large number of different perturbations δH can be evaluated using Eq. (3.17). In practice, this is a relatively simple numerical integration and is much easier than solving the transport equation for each perturbed state as is required for the direct calculation method described above.

The second term in Eq. (3.16) is a correction term for linear perturbation theory and can be utilized to obtain a higher order estimate as follows. Using the definition of the adjoint operator, Eq. (3.16) becomes

$$\delta R = - \langle \phi^* \delta H \phi \rangle - \langle \delta\phi \delta H^* \phi^* \rangle \quad . \tag{3.18}$$

Note that the second term in Eq. (3.18) is similar in form to Eq. (3.8). Following the same procedure outlined above, a second order result can be obtained which is

$$\delta R \approx - \langle \phi^* \delta H \phi \rangle + \langle \Gamma^* \delta H \phi \rangle \quad , \tag{3.19}$$

$$\text{where} \quad H^* \Gamma^* = \delta H^* \phi^* \quad . \tag{3.20}$$

Equation (3.19) does not have the general usefulness as does Eq. (3.17). The source in Eq. (3.20) depends upon the nature of the perturbation being considered, although the magnitude of the perturbation can be varied by a scale factor. Also the source in Eq. (3.20) can be both positive and negative which presents some difficulty for discrete ordinates methods. The source in Eq. (3.12) is non-negative for many applications.

Another second order equation is

$$\delta R \approx - \langle \phi^* \delta H \phi \rangle + \langle \phi^* \delta H \Gamma \rangle \quad , \tag{3.21}$$

$$\text{where} \quad H \Gamma = \delta H \phi \quad . \tag{3.22}$$

Equations (3.19) through (3.22) are not considered of central importance but are mentioned because they are similar in form to the generalized perturbation equations to be derived in Chapter VI.

The adjoint function $\phi^*(\overline{r},E,\overline{\Omega})$ defined by Eq. (3.12) is an importance function which gives the expected contribution of a neutron at phase space point $(\overline{r},E,\overline{\Omega})$ to the response R.[8] This result can be demonstrated using

Eq. (3.17) and a perturbation which is purely absorbing. For this case

$$\delta R \approx - \langle \phi^* \delta \Sigma_a \phi \rangle \quad . \tag{3.23}$$

The $\delta\Sigma_a\phi$ term is a neutron removal rate that is weighted with ϕ^* in order to relate the loss of neutrons to changes in R. The minus sign accounts for the fact that the neutrons are being removed.

CHAPTER IV

PERTURBATION THEORY FOR THE EIGENVALUE PROBLEM

The purpose of this chapter is to derive perturbation equations for the change in the λ eigenvalue due to a system perturbation. Some of the equations developed in this chapter will be useful in the development of the generalized perturbation theory equations in Chapters V and VI.

The equations describing the reference and perturbed states for the eigenvalue problem are

$$A\phi - \lambda B\phi = 0 \ , \tag{4.1}$$

$$A'\phi' - \lambda' B'\phi' = 0 \ , \tag{4.2}$$

$$A^*\phi^* - \lambda B^*\phi^* = 0 \ , \tag{4.3}$$

$$\text{and} \quad A^{*\prime}\phi^{*\prime} - \lambda' B^{*\prime}\phi^{*\prime} = 0 \ , \tag{4.4}$$

where the operator form of the forward and adjoint eigenvalue equations described in Chapter II has been used. Equation (4.2) can be written as

$$A\phi + A\delta\phi + \delta A\phi' - \lambda B\phi - \lambda B\delta\phi - (\lambda' B' - \lambda B)\phi' = 0 \ , \tag{4.5}$$

where the convention established in Chapter III for relating the reference and perturbed states has been used such that

$$\phi' = \phi + \delta\phi \ , \tag{4.6}$$

$$\lambda' = \lambda + \delta\lambda \ , \tag{4.7}$$

$$A' = A + \delta A \ , \tag{4.8}$$

$$\text{and} \quad B' = B + \delta B \ . \tag{4.9}$$

Subtracting Eq. (4.1) from Eq. (4.5) yields

$$(A - \lambda B)\delta\phi = -(\delta A - \lambda' B' + \lambda B)\phi' \ . \tag{4.10}$$

Equation (4.4) can be rewritten to obtain a result similar in form to Eq. (4.5). Equation (4.3) can be subtracted from this result to obtain the following adjoint equation which is similar in form to Eq. (4.10):

$$(A^* - \lambda B^*)\delta\phi^* = -(\delta A^* - \lambda' B^{*\prime} + \lambda B^*)\phi^{*\prime} \quad . \tag{4.11}$$

Multiplying Eq. (4.10) by ϕ^* and integrating yields

$$\langle\phi^*(A - \lambda B)\delta\phi\rangle = -\langle\phi^*(\delta A - \lambda' B' + \lambda B)\phi'\rangle \ . \tag{4.12}$$

The left-hand side of Eq. (4.12) can be evaluated using the definition of the adjoint operator and Eq. (4.3) as follows

$$\langle\phi^*(A - \lambda B)\delta\phi\rangle = \langle\delta\phi(A^* - \lambda B^*)\phi^*\rangle = 0 \quad , \tag{4.13}$$

Using Eq. (4.13) and the following identity

$$\lambda' B' - \lambda B = \lambda\delta B + \delta\lambda B' \quad , \tag{4.14}$$

Eq. (4.12) can be solved for $\delta\lambda$ to obtain

$$\delta\lambda = \frac{\langle\phi^*(\delta A - \lambda\delta B)\phi'\rangle}{\langle\phi^* B'\phi'\rangle} \quad . \tag{4.15}$$

Another exact result for $\delta\lambda$ can be obtained either by multiplying Eq. (4.11) by ϕ and integrating or by interchanging the reference and perturbed states in Eq. (4.12). This result is

$$\delta\lambda = \frac{\langle\phi^{*\prime}(\delta A - \lambda\delta B)\phi\rangle}{\langle\phi^{*\prime} B'\phi\rangle} \quad . \tag{4.16}$$

The linear (or first order in the perturbation) estimate for $\delta\lambda$ is obtained by considering a very small perturbation. The perturbed state is approximated by the reference state to obtain

$$\delta\lambda_0 = \frac{\langle\phi^*(\delta A - \lambda\delta B)\phi\rangle}{\langle\phi^* B\phi\rangle} \quad , \tag{4.17}$$

where $\delta\lambda_0$ is the linear estimate for $\delta\lambda$. Equation (4.17) has been used for a wide variety of applications. Once ϕ and ϕ^* are obtained, the effect of a large number of different perturbations can be estimated simply by performing the indicated integrations.

Second order estimates for $\delta\lambda$ can also be obtained. Substituting Eq. (4.6) into Eq. (4.15) and neglecting higher order terms to obtain a result that is linear in $\delta\phi$ yields

$$\delta\lambda \approx \frac{\langle\phi^*(\delta A-\lambda\delta B)\phi\rangle}{\langle\phi^* B'\phi\rangle}\left[1 + \frac{\langle\phi^*(\delta A-\lambda\delta B)\delta\phi\rangle}{\langle\phi^*(\delta A-\lambda\delta B)\phi\rangle} - \frac{\langle\phi^* B'\delta\phi\rangle}{\langle\phi^* B'\phi\rangle}\right] \quad . \tag{4.18}$$

Using the definition of the adjoint operator, Eq. (4.18) becomes

$$\delta\lambda \approx \frac{\langle\phi^*(\delta A-\lambda\delta B)\phi\rangle}{\langle\phi^* B'\phi\rangle}\,(1 + \langle S^*\delta\phi\rangle) \quad , \tag{4.19}$$

where
$$S^* = \frac{(\delta A^*-\lambda\delta B^*)\phi^*}{\langle\phi^*(\delta A-\lambda\delta B)\phi\rangle} - \frac{B^{*\prime}\phi^*}{\langle\phi^* B'\phi\rangle} \quad . \tag{4.20}$$

Starting with Eq. (4.16) and neglecting higher order terms to obtain a result that is linear in $\delta\phi^*$, yields another second order estimate

$$\delta\lambda \approx \frac{\langle\phi^*(\delta A-\lambda\delta B)\phi\rangle}{\langle\phi^* B'\phi\rangle}\,(1 + \langle S\delta\phi^*\rangle) \quad , \tag{4.21}$$

where
$$S = \frac{(\delta A-\lambda\delta B)\phi}{\langle\phi^*(\delta A-\lambda\delta B)\phi\rangle} - \frac{B'\phi}{\langle\phi^* B'\phi\rangle} \quad . \tag{4.22}$$

Discussion of Eqs. (4.19) through (4.22) is deferred until Chapter VI where very similar equations are developed.

The physical interpretation of ϕ^* can be demonstrated using perturbation equations. Recalling that $\lambda = \frac{1}{k}$, the following result is

obtained for small perturbations

$$\delta\lambda \approx -\frac{\delta k}{k^2} \quad . \tag{4.23}$$

Using Eq. (4.17) and considering a small perturbation that is purely absorbing results in

$$\delta k \approx -\frac{k^2 \langle \phi^* \delta\Sigma_a \phi \rangle}{\langle \phi^* B \phi \rangle} \quad . \tag{4.24}$$

ϕ^* is an importance function which relates the loss of neutrons $\delta\Sigma_a\ \phi$ at any point in phase space to the resulting change in k. The minus sign indicates that a loss of neutrons decreases k as would be expected.

CHAPTER V

GENERALIZED PERTURBATION THEORY FOR LINEAR RATIOS

The purpose of this chapter is to derive perturbation equations for the system described by

$$A\phi - \lambda B\phi = 0 \tag{5.1}$$

$$\text{and} \quad R = \frac{\langle \Sigma_1 \phi \rangle}{\langle \Sigma_2 \phi \rangle} \quad . \tag{5.2}$$

Equation (5.1) represents a critical or near critical reactor and R is a linear flux ratio (i.e., the ratio of functionals that contain only ϕ). Examples of performance parameters that can be represented by Eq. (5.2) are breeding ratio and the ratio of experimentally determined reaction rates.

Using the notation introduced in previous chapters, the perturbed state is described by

$$A'\phi' - \lambda' B'\phi' = 0 \tag{5.3}$$

$$\text{and } R' = \frac{\langle \Sigma_1' \phi' \rangle}{\langle \Sigma_2' \phi' \rangle} \quad . \tag{5.4}$$

Using the convention for relating the reference and perturbed states introduced in Chapter III,

$$\delta R = R' - R \tag{5.5}$$

or

$$\frac{\delta R}{R} = \frac{R'}{R} - 1 \quad . \tag{5.6}$$

Substituting Eqs. (5.2) and (5.4) into Eq. (5.6) and rearranging results in

$$\frac{\delta R}{R} = \frac{\dfrac{\langle \Sigma_1' \phi' \rangle}{\langle \Sigma_1 \phi \rangle}}{\dfrac{\langle \Sigma_2' \phi' \rangle}{\langle \Sigma_2 \phi \rangle}} - 1 \tag{5.7}$$

or

$$\frac{\delta R}{R} = \frac{\dfrac{\langle (\Sigma_1 + \delta\Sigma_1)(\phi + \delta\phi) \rangle}{\langle \Sigma_1 \phi \rangle}}{\dfrac{\langle (\Sigma_2 + \delta\Sigma_2)(\phi + \delta\phi) \rangle}{\langle \Sigma_2 \phi \rangle}} - 1 \quad . \tag{5.8}$$

By neglecting any terms that are higher than first order in the perturbation (i.e., $\langle \delta\Sigma_1 \delta\phi \rangle$), Eq. (5.8) becomes

$$\frac{\delta R}{R} \approx \frac{1 + \dfrac{\langle \delta\Sigma_1 \phi \rangle + \langle \Sigma_1 \delta\phi \rangle}{\langle \Sigma_1 \phi \rangle}}{1 + \dfrac{\langle \delta\Sigma_2 \phi \rangle + \langle \Sigma_2 \delta\phi \rangle}{\langle \Sigma_2 \phi \rangle}} - 1 \quad . \tag{5.9}$$

The first order form of Eq. (5.9) that is linear in $\delta\phi$, $\delta\Sigma_1$, and $\delta\Sigma_2$ is

$$\frac{\delta R}{R} \approx \frac{\langle \delta\Sigma_1 \phi \rangle}{\langle \Sigma_1 \phi \rangle} - \frac{\langle \delta\Sigma_2 \phi \rangle}{\langle \Sigma_2 \phi \rangle} + \frac{\langle \Sigma_1 \delta\phi \rangle}{\langle \Sigma_1 \phi \rangle} - \frac{\langle \Sigma_2 \delta\phi \rangle}{\langle \Sigma_2 \phi \rangle} \quad . \tag{5.10}$$

The first two terms on the right-hand side of Eq. (5.10) are called the direct effect since they result from changes in Σ_1 and Σ_2, while the last two are called the indirect effect since they result from changes in the flux.

The indirect effect in Eq. (5.10) can be written as

$$I = \langle S^* \delta\phi \rangle \quad , \tag{5.11}$$

where

$$S^* = \frac{\Sigma_1}{\langle \Sigma_1 \phi \rangle} - \frac{\Sigma_2}{\langle \Sigma_2 \phi \rangle} \quad . \tag{5.12}$$

S^* is an importance function that relates changes in the flux to changes in R.

In order to obtain an equation for the indirect effect I which does not contain $\delta\phi$, it is useful to introduce the function Γ_G^* defined by

$$(A^* - \lambda B^*)\Gamma_G^* = S^* \quad . \tag{5.13}$$

The boundary conditions for Eq. (5.13) are the same as for the homogeneous equation

$$(A^* - \lambda B^*)\phi^* = 0 \quad . \tag{5.14}$$

Equation (5.13) and other similar equations will be referred to as "generalized" equations. Generalized equations have special properties that will be discussed in Chapter VIII.

Given any particular solution, Γ_p^* to Eq. (5.13), a more general solution is

$$\Gamma_G^* = \Gamma_p^* + C\phi^* \quad , \tag{5.15}$$

where C is an arbitrary constant. This result is easily verified by substituting Eq. (5.15) into Eq. (5.13) and using Eq. (5.14). The general solution is rewritten as

$$\Gamma_G^* = \Gamma^* + C\phi^* \quad , \tag{5.16}$$

where

$$\langle \Gamma^* B\phi \rangle = 0 \quad . \tag{5.17}$$

A method for obtaining Γ^* given any particular solution Γ_p^* will be presented in Chapter VII.

Using Eqs. (5.13) and (5.15), Eq. (5.11) can be written as

$$I = \langle \delta\phi(A^* - \lambda B^*)(\Gamma^* + C\phi^*) \rangle \quad . \tag{5.18}$$

Noting Eq. (5.14), Eq. (5.18) reduces to

$$I = \langle \delta\phi (A^* - \lambda B^*) \Gamma^* \rangle \quad . \tag{5.19}$$

The operator $(A^* - \lambda B^*)$ acts as a filter to remove ϕ^*. Applying the definition of the adjoint operator to Eq. (5.19) results in

$$I = \langle \Gamma^* (A - \lambda B) \delta\phi \rangle \quad . \tag{5.20}$$

$\delta\phi$ can be eliminated using Eq. (4.10) which is repeated:

$$(A - \lambda B)\delta\phi = -(\delta A - \lambda' B' + \lambda B)\phi' \quad . \tag{5.21}$$

Substituting Eq. (5.21) into Eq. (5.20) yields

$$I = -\langle \Gamma^* (\delta A - \lambda' B' + \lambda B)\phi' \rangle \quad . \tag{5.22}$$

Using the identity

$$\lambda' B' - \lambda B = \lambda \delta B + \delta\lambda B + \delta\lambda\delta B \quad , \tag{5.23}$$

Equation (5.22) becomes

$$I = -\langle \Gamma^* (\delta A - \lambda\delta B - \delta\lambda B - \delta\lambda\delta B)\phi' \rangle \quad . \tag{5.24}$$

Considering only small perturbations (i.e., neglecting $\delta\lambda\delta B$ and replacing ϕ' with ϕ) and using Eq. (5.17) to eliminate the $\delta\lambda\langle\Gamma^* B\phi\rangle$ term, the following result is obtained:

$$\frac{\delta R}{R} \approx \frac{\langle \delta\Sigma_1 \phi \rangle}{\langle \Sigma_1 \phi \rangle} - \frac{\langle \delta\Sigma_2 \phi \rangle}{\langle \Sigma_2 \phi \rangle} - \langle \Gamma^* (\delta A - \lambda\delta B)\phi \rangle \quad . \tag{5.25}$$

Equation (5.25) is a perturbation equation for δR that is linear in the perturbation operators $\delta\Sigma_1$, $\delta\Sigma_2$, δA, and δB. Note that $\delta\phi$ appears in Eq. (5.10) but not in Eq. (5.25). Once ϕ and Γ^* are obtained, Eq. (5.25)

can be used to economically estimate the effect of many different perturbations by evaluating the indicated integrations.

A more accurate result for R' can be obtained by retaining second order terms and neglecting higher order terms. Equation (5.4) can be written as

$$R' = \frac{\langle\Sigma_1'\phi\rangle}{\langle\Sigma_2'\phi\rangle} \frac{\left(1 + \frac{\langle\Sigma_1'\delta\phi\rangle}{\langle\Sigma_1'\phi\rangle}\right)}{\left(1 + \frac{\langle\Sigma_2'\delta\phi\rangle}{\langle\Sigma_2'\phi\rangle}\right)} \quad . \tag{5.26}$$

Equation (5.26) can be expanded in a series to obtain

$$R' = \frac{\langle\Sigma_1'\phi\rangle}{\langle\Sigma_2'\phi\rangle} [1+\alpha(1-\beta+\beta^2-\beta^3+-\cdots)] \quad , \tag{5.27}$$

where

$$\alpha = \frac{\langle\Sigma_1'\delta\phi\rangle}{\langle\Sigma_1'\phi\rangle} - \frac{\langle\Sigma_2'\delta\phi\rangle}{\langle\Sigma_2'\phi\rangle} \tag{5.28}$$

and

$$\beta = \frac{\langle\Sigma_2'\delta\phi\rangle}{\langle\Sigma_2'\phi\rangle} \quad . \tag{5.29}$$

Equation (5.27) is easily verified using simple algebra and the series

$$\frac{1}{1+\beta} = 1 - \beta + \beta^2 - \beta^3 + - \cdots$$

which converges for $|\beta|<1$.

In Eq. (5.27) the first term is a direct effect that does not account for changes in the flux, and α is a correction term that is first order in $\delta\phi$. Thusly, an equation which retains second order terms in $\delta\phi$ is

$$R' \approx \frac{\langle\Sigma_1'\phi\rangle}{\langle\Sigma_2'\phi\rangle} [1+\alpha(1-\beta)] \quad , \tag{5.30}$$

Equation (5.28) can be written as

$$\alpha = \langle S_1^*\delta\phi\rangle \quad , \tag{5.31}$$

where $S_1^* = \frac{\Sigma_1'}{<\Sigma_1'\phi>} - \frac{\Sigma_2'}{<\Sigma_2'\phi>}$. (5.32)

Note that Eq. (5.32) is very similar to Eq. (5.12). Using the same development presented following Eq. (5.12), an equation which is very similar to Eq. (5.22) is obtained:

$$\alpha = - <\Gamma_1^*(\delta A - \lambda' B' + \lambda B)\phi'> \quad , \tag{5.33}$$

where $$(A^* - \lambda B^*)\Gamma_1^* = S_1^* \tag{5.34}$$

and $$<\Gamma_1^* B\phi> = 0 \quad . \tag{5.35}$$

Using $\phi' = \phi + \delta\phi$ and Eq. (5.35), Eq. (5.33) becomes

$$\alpha = - <\Gamma_1^*(\delta A - \lambda'\delta B)\phi> \left(1 + \frac{<\Gamma_1^*(\delta A - \lambda' B' + \lambda B)\delta\phi>}{<\Gamma_1^*(\delta A - \lambda'\delta B)\phi>}\right) \quad . \tag{5.36}$$

Recalling that α and β are each first order terms, the following result is obtained by retaining terms that are second order in the perturbation and neglecting higher order terms:

$$\alpha(1-\beta) \approx - <\Gamma_1^*(\delta A - \lambda\delta B)\phi>(1+<S_2^*\delta\phi>) + \delta\lambda_0 <\Gamma_1^*\delta B\phi> \quad , \tag{5.37}$$

where $$S_2^* = \frac{(\delta A^* - \lambda\delta B^* - \delta\lambda_0 B^*)\Gamma_1^*}{<\Gamma_1^*(\delta A - \lambda\delta B)\phi>} - \frac{\Sigma_2'}{<\Sigma_2'\phi>} \quad , \tag{5.38}$$

and $\delta\lambda_0$ is a first order estimate for $\delta\lambda$.

Returning to Eq. (5.30), a second order estimate for R' is

$$R' \approx \frac{<\Sigma_1'\phi>}{<\Sigma_2'\phi>}\left\{1 - <\Gamma_1^*(\delta A - \lambda\delta B)\phi>[1 - <\Gamma_2^*(\delta A - \lambda\delta B)\phi>] + \delta\lambda_0 <\Gamma_1^*\delta B\phi>\right\} \quad , \tag{5.39}$$

where

$$(A^* - \lambda B^*)\Gamma_2^* = S_2^* \tag{5.40}$$

$$\text{and } <\Gamma_2^* B\phi> = 0 \quad . \tag{5.41}$$

For brevity, several steps were omitted in the development of Eqs. (5.36) through (5.40). These equations were included to demonstrate a procedure for obtaining a second order result. Equation (5.39) reduces to Eq. (5.25) for small perturbations.

The physical interpretation of Γ^* can be obtained by considering a purely absorbing perturbation in Eq. (5.25):

$$\frac{\delta R}{R} \approx - \langle \Gamma^* \delta \Sigma_a \phi \rangle \quad . \tag{5.42}$$

Γ^* is an importance function which relates the loss of neutrons $\delta\Sigma_a\phi$ at any point in phase space to changes in δR.

CHAPTER VI

GENERALIZED PERTURBATION THEORY FOR BILINEAR RATIOS

The purpose of this chapter is to develop perturbation equations for the system described by

$$A\phi - \lambda B\phi = 0 \quad , \tag{6.1}$$

$$A^*\phi^* - \lambda B^*\phi^* = 0 \quad , \tag{6.2}$$

$$\text{and } R = \frac{\langle\phi^* H_1 \phi\rangle}{\langle\phi^* H_2 \phi\rangle} \quad . \tag{6.3}$$

R is a bilinear ratio (i.e., the ratio of bilinear functionals of ϕ and ϕ^*). Examples of performance parameters that can be represented by Eq. (6.3) are reactivity worth, Doppler coefficient, prompt-neutron lifetime, effective delayed-neutron fraction, and the ratio of reactivity worths.[4]

Using the notation introduced in previous chapters, the perturbed state is described by

$$A'\phi' - \lambda' B'\phi' = 0 \quad , \tag{6.4}$$

$$A^{*\prime}\phi^{*\prime} - \lambda' B^{*\prime}\phi^{*\prime} = 0 \quad , \tag{6.5}$$

$$\text{and } R' = \frac{\langle\phi^{*\prime} H_1' \phi'\rangle}{\langle\phi^{*\prime} H_2' \phi'\rangle} \quad . \tag{6.6}$$

The relative change in R is given by

$$\frac{\delta R}{R} = \frac{R'}{R} - 1 \quad . \tag{6.7}$$

Substituting Eqs. (6.3) and (6.6) into Eq. (6.7) and using the convention for relating the reference and perturbed states introduced in Chapter III results in

$$\frac{\delta R}{R} = \frac{\dfrac{<(\phi^*+\delta\phi^*)(H_1+\delta H_1)(\phi+\delta\phi)>}{<\phi^* H_1 \phi>}}{\dfrac{<(\phi^*+\delta\phi^*)(H_2+\delta H_2)(\phi+\delta\phi)>}{<\phi^* H_2 \phi>}} - 1 \quad . \tag{6.8}$$

The linearized form of Eq. (6.8) can be written as

$$\frac{\delta R}{R} \approx D + I_{\delta\phi} + I_{\delta\phi^*} \quad , \tag{6.9}$$

where

$$D = \frac{<\phi^* \delta H_1 \phi>}{<\phi^* H_1 \phi>} - \frac{<\phi^* \delta H_2 \phi>}{<\phi^* H_2 \phi>} \quad , \tag{6.10}$$

$$I_{\delta\phi} = \frac{<\phi^* H_1 \delta\phi>}{<\phi^* H_1 \phi>} - \frac{<\phi^* H_2 \delta\phi>}{<\phi^* H_2 \phi>} \quad , \tag{6.11}$$

and

$$I_{\delta\phi^*} = \frac{<\delta\phi^* H_1 \phi>}{<\phi^* H_1 \phi>} - \frac{<\delta\phi^* H_2 \phi>}{<\phi^* H_2 \phi>} \quad . \tag{6.12}$$

Equations (6.9) through (6.12) were obtained by neglecting second order terms such as $\phi^*\delta H_1 \delta\phi$, $\delta\phi^* H_1 \delta\phi$, or $\delta\phi^* \delta H_1 \phi$. In Eq. (6.9), D is the direct effect, $I_{\delta\phi}$ is the indirect effect resulting from changes in ϕ, and $I_{\delta\phi^*}$ is the indirect effect resulting from changes in ϕ^*. Equations (6.11) and (6.12) can be rewritten as

$$I_{\delta\phi} = <S^* \delta\phi> \tag{6.13}$$

and

$$I_{\delta\phi^*} = <S \delta\phi^*> \quad , \tag{6.14}$$

where

$$S^* = \frac{H_1^* \phi^*}{<\phi^* H_1 \phi>} - \frac{H_2^* \phi^*}{<\phi^* H_2 \phi>} \tag{6.15}$$

and

$$S = \frac{H_1 \phi}{<\phi^* H_1 \phi>} - \frac{H_2 \phi}{<\phi^* H_2 \phi>} \quad . \tag{6.16}$$

The adjoint operator relationship was used to obtain Eq. (6.15). Notice that Eqs. (4.20) and (4.22), which were obtained in Chapter IV as second

order correction terms for $\delta\lambda$, are of the same general form as Eqs. (6.15) and (6.16).

Equation (6.13) is very similar to Eq. (5.11) that was developed in Chapter V for linear ratios. Therefore, a result for $I_{\delta\phi}$ based on the development in Chapter V [see Eq. (5.25)] is

$$I_{\delta\phi} \approx - \langle \Gamma^*(\delta A - \lambda\delta B)\phi \rangle \quad , \tag{6.17}$$

where

$$(A^* - \lambda B^*)\Gamma^* = S^* \tag{6.18}$$

and

$$\langle \Gamma^* B\phi \rangle = 0 \quad . \tag{6.19}$$

In order to obtain an equation for the indirect effect $I_{\delta\phi^*}$ that does not contain $\delta\phi^*$, it is useful to introduce the "generalized" function Γ_G defined by

$$(A - \lambda B)\Gamma_G = S \quad . \tag{6.20}$$

The boundary conditions for Eq. (6.20) are the same as the boundary conditions for the corresponding homogeneous equation, Eq. (6.1). Equation (6.20) is a "generalized" equation. Generalized equations are discussed in Chapter VIII. A solution to Eq. (6.20) is

$$\Gamma_G = \Gamma + C\phi \quad , \tag{6.21}$$

where

$$\langle \phi^* B\Gamma \rangle = 0 \tag{6.22}$$

and C is an arbitrary constant. Equation (6.22) is an orthogonality relationship which will be discussed in Chapter VII. Substituting Eq. (6.20) and (6.21) into Eq. (6.14) yields

$$I_{\delta\phi^*} = \langle\delta\phi^*(A-\lambda B)(\Gamma+C\phi)\rangle \quad . \tag{6.23}$$

Using Eq. (6.1), Eq. (6.23) reduces to

$$I_{\delta\phi^*} = \langle\delta\phi^*(A-\lambda B)\Gamma\rangle \quad . \tag{6.24}$$

Applying the definition of an adjoint operation to Eq. (6.24) results in

$$I_{\delta\phi^*} = \langle\Gamma(A^*-\lambda B^*)\delta\phi^*\rangle \quad . \tag{6.25}$$

The $\delta\phi^*$ in Eq. (6.25) can be removed using Eq. (4.11) which is repeated here

$$(A^*-\lambda B^*)\delta\phi^* = -(\delta A^*-\lambda' B^{*\prime}+\lambda B^*)\phi^{*\prime} \quad . \tag{6.26}$$

Substituting Eq. (6.26) into Eq. (6.25) yields

$$I_{\delta\phi^*} = -\langle\Gamma(\delta A^*-\lambda' B^{*\prime}+\lambda B^*)\phi^{*\prime}\rangle \quad . \tag{6.27}$$

The adjoint operator relationship is used to obtain

$$I_{\delta\phi^*} = -\langle\phi^{*\prime}(\delta A-\lambda' B'+\lambda B)\Gamma\rangle \quad . \tag{6.28}$$

Using the identity

$$\lambda' B' - \lambda B = \lambda\delta B + \delta\lambda B + \delta\lambda\delta B \quad , \tag{6.29}$$

Eq. (6.28) becomes

$$I_{\delta\phi^*} = -\langle\phi^{*\prime}(\delta A-\lambda\delta B-\delta\lambda B-\delta\lambda\delta B)\Gamma\rangle \quad . \tag{6.30}$$

Considering only small perturbations (i.e., neglecting the $\delta\lambda\delta B$ term and replacing $\phi^{*\prime}$ with ϕ^*) and using Eq. (6.22) to eliminate the $\delta\lambda\langle\phi^* B\Gamma\rangle$ term, the following result is obtained:

$$I_{\delta\phi^*} \approx - \langle\phi^*(\delta A - \lambda\delta B)\Gamma\rangle \quad . \tag{6.31}$$

Returning to Eq. (6.9), the following result is obtained

$$\frac{\delta R}{R} \approx \frac{\langle\phi^*\delta H_1\phi\rangle}{\langle\phi^* H_1\phi\rangle} - \frac{\langle\phi^*\delta H_2\phi\rangle}{\langle\phi^* H_2\phi\rangle} - \langle\Gamma^*(\delta A - \lambda\delta B)\phi\rangle - \langle\phi^*(\delta A - \lambda\delta B)\Gamma\rangle \quad . \tag{6.32}$$

Equation (6.32) is linear in the perturbation operators δH_1, δH_2, δA, and δB. If ϕ, ϕ^*, Γ, and Γ^* are obtained, a large number of perturbations represented by δA and δB can be economically estimated using Eq. (6.32).

CHAPTER VII

EIGENFUNCTION EXPANSIONS FOR GENERALIZED FUNCTIONS

The purpose of this chapter is to investigate the nature of the generalized functions Γ and Γ^* using the concept of eigenfunction expansions. It will be shown that Γ and Γ^* contain no fundamental mode component.

In previous chapters, the forward and adjoint forms of the homogeneous transport were introduced. These were

$$A\phi - \lambda B\phi = 0 \tag{7.1}$$

$$\text{and} \quad A^*\phi^* - \lambda B^*\phi^* = 0 \quad . \tag{7.2}$$

ϕ represents the neutron flux in a reactor and must be positive at every point in phase space. Similarly, ϕ^* represents the relative importance to criticality of neutrons in a reactor and also must be positive at every point in phase space. Therefore, it follows that

$$\langle\phi^* B\phi\rangle \neq 0 \quad , \tag{7.3}$$

since B is a fission operator.

The generalized function Γ is defined by

$$(A - \lambda B)\Gamma = S \tag{7.4}$$

$$\text{and} \quad \langle\phi^* B\Gamma\rangle = 0 \quad . \tag{7.5}$$

A general solution for Eq. (7.4) is

$$\Gamma_G = \Gamma + C\phi \quad , \tag{7.6}$$

where C is an arbitrary constant. Equation (7.6) represents a family of solutions, and any one of these solutions can be used in perturbation equations. However, the particular solution defined by Eq. (7.5) simplifies the perturbation equations and is better suited for numerical analysis. Given any solution Γ_G, it is possible to obtain Γ using the following formula

$$\Gamma = \Gamma_G - \frac{\langle \phi^* B \Gamma_G \rangle}{\langle \phi^* B \phi \rangle} \phi \quad . \tag{7.7}$$

This result is easily verified by applying the operator B to Eq. (7.7), multiplying by ϕ^*, and integrating. Thus Eq. (7.7) provides a method for obtaining a solution which satisfies Eq. (7.5).

At this point, it is useful to introduce eigenfunction expansions. The eigenfunctions ϕ and ϕ^* represent the all positive or fundamental mode solutions for Eqs. (7.1) and (7.2). The concept of eigenfunction expansions is based upon the assumption that there is more than one and possibly even an infinite number of λ's for which solutions to Eqs. (7.1) and (7.2) exist and also that Eqs. (7.1) and (7.2) have the same eigenvalues. Thus Eqs. (7.1) and (7.2) are written as

$$A\phi_n - \lambda_n B\phi_n = 0 \tag{7.8}$$

$$\text{and} \quad A^*\phi_m^* - \lambda_m B^*\phi_m^* = 0 \quad , \tag{7.9}$$

where the λ's are arranged in numerical order such that $\lambda_0 < \lambda_1 < \lambda_2 < \lambda_3 \cdots$ and λ_0 denotes the fundamental eigenvalue. In order to obtain an orthogonality relationship, Eq. (7.8) is multiplied by ϕ_m^*, and Eq. (7.9) is multiplied by ϕ_n. Both equations are then integrated over phase space to obtain

$$<\phi_m^* A \phi_n> = \lambda_n <\phi_m^* B \phi_n> \tag{7.10}$$

$$\text{and } <\phi_n A^* \phi_m^*> = \lambda_m <\phi_n B^* \phi_m^*> \quad . \tag{7.11}$$

Applying the definition of adjoint operators, Eq. (7.11) becomes

$$<\phi_m^* A \phi_n> = \lambda_m <\phi_m^* B \phi_n> \quad , \tag{7.12}$$

and subtracting Eq. (7.12) from Eq. (7.10) results in

$$(\lambda_n - \lambda_m) <\phi_m^* B \phi_n> = 0 \quad . \tag{7.13}$$

Thus, the orthogonality relationship customarily assumed for the eigenfunctions ϕ_m and ϕ_m^* is

$$<\phi_m^* B \phi_n> = 0 \text{ for } m \neq n \tag{7.14}$$

$$\text{and } <\phi_m^* B \phi_m> \neq 0 \text{ for all } m. \tag{7.15}$$

A more thorough discussion of this orthogonality relationship is given by Henry.[9]

It will now be shown that Γ cannot in general be expanded in the functions ϕ_m. To show this, the following expansion is assumed:

$$\Gamma = \sum_m a_m \phi_m \quad . \tag{7.16}$$

The summation over m excludes the fundamental mode ϕ (denoted by ϕ_0) in order to satisfy Eq. (7.5). Substituting Eq. (7.16) into Eq. (7.4) results in

$$\sum_m a_m A \phi_m - \lambda \sum_m a_m B \phi_m = S \quad . \tag{7.17}$$

Using Eq. (7.8), Eq. (7.17) becomes

$$\sum_m a_m \lambda_m B\phi_m - \lambda \sum_m a_m B\phi_m = S \quad . \tag{7.18}$$

It is easily shown that Eq. (7.18) cannot be satisfied in every case. For example, at points in phase space where no fission occurs (such as in reflectors or control rods), the left-hand side of Eq. (7.18) is zero while there is no requirement that S be zero at these points. In addition, if a single fission spectrum $\chi(E)$ is assumed for all fission neutrons (DOT IV requires this assumption), then the energy dependence of the left-hand side of Eq. (7.18) is limited to that of $\chi(E)$ also. Since S is not limited to this energy dependence, Eq. (7.18) cannot be satisfied. Thus the assumption of completeness represented by Eq. (7.16) is not justified.

In order to obtain a function which can be expanded in the eigenfunctions ϕ_m and avoid the objections noted above, the function Γ is split into two functions as follows

$$\Gamma = \psi + \psi_f \quad , \tag{7.19}$$

where $A\psi = S$. (7.20)

Substituting Eq. (7.19) into Eq. (7.4) yields

$$A\psi - \lambda B\psi + A\psi_f - \lambda B\psi_f = S \quad . \tag{7.21}$$

Using Eq. (7.20), Eq. (7.21) simplifies to

$$A\psi_f - \lambda B\psi_f = \lambda B\psi \quad . \tag{7.22}$$

The following eigenfunction expansion is now assumed for ψ_f:

$$\psi_f = \sum_m a_m \phi_m \quad . \tag{7.23}$$

Substituting Eq. (7.23) into Eq. (7.22) results in

$$\sum_m a_m A\phi_m - \lambda \sum_m a_m B\phi_m = \lambda B\psi \quad . \tag{7.24}$$

Using Eq. (7.8), Eq. (7.24) becomes

$$\sum_m a_m (\lambda_m - \lambda) B\phi_m = \lambda B\psi \quad . \tag{7.25}$$

Since the operator B appears in all terms in Eq. (7.25), the objections raised above no longer exist. In order to solve for the coefficients a_m, Eq. (7.25) is multiplied by ϕ_n^* and integrated over phase space to obtain

$$\sum_m a_m (\lambda_m - \lambda) < \phi_n^* B\phi_m > = \lambda < \phi_n^* B\psi > \quad . \tag{7.26}$$

Using the orthogonality relationship given by Eqs. (7.14) and (7.15), Eq. (7.26) is solved for a_n to obtain

$$a_n = \frac{\lambda}{(\lambda_n - \lambda)} \frac{<\phi_n^* B\psi>}{<\phi_n^* B\phi_n>} \quad . \tag{7.27}$$

Finally substituting Eq. (7.27) into Eq. (7.23) and the resulting equation into Eq. (7.19), the following expansion for Γ is obtained:

$$\Gamma = \psi + \sum_m \frac{\lambda}{(\lambda_m - \lambda)} \frac{<\phi_m^* B\psi>}{<\phi_m^* B\phi_m>} \phi_m \quad . \tag{7.28}$$

In order for an eigenfunction expansion to be rigorous, a completeness requirement of some type must be met. It was shown earlier that the function Γ cannot always be expanded in the functions ϕ_m, and thus that the functions ϕ_m are not complete in space, energy, and direction. However, a possible completeness relationship is that $B\Gamma$ can be expanded in the functions $B\phi_m$ even though Γ cannot be expanded in the functions ϕ_m. In order to obtain the expansion for $B\Gamma$, $B\psi$ is expanded in the functions $B\phi_m$ to obtain

$$B\psi = \sum_m \frac{<\phi_m^* B\psi>}{<\phi_m^* B\phi_m>} B\phi_m \quad . \tag{7.29}$$

Applying the operator B to Eq. (7.28) and using Eq. (7.29) yields the desired expansion:

$$B\Gamma = \sum_m \frac{\lambda_m}{(\lambda_m - \lambda)} \frac{\langle \phi_m^* B\psi \rangle}{\langle \phi_m^* B\phi_m \rangle} B\phi_m \quad . \tag{7.30}$$

In order for Eq. (7.5) to be satisfied, the summation in Eq. (7.30) must not include the fundamental mode. This means that $B\Gamma$ contains no fundamental mode component $B\phi_m$.

For the special case of the single fission spectrum $\chi(E)$, the orthogonality relationship for eigenfunction expansions can be formulated in terms of functions of space only. In this case, the operator B is given by

$$B\phi_n = \frac{\chi(E)}{4\pi} \iint \nu\Sigma_f(\bar{r},E') \; \phi_n \; (\bar{r},E',\bar{\Omega}') \; dE'd\bar{\Omega}' \quad . \tag{7.31}$$

Multiplying Eq. (7.31) by ϕ_m^* and integrating over phase space yields:

$$\langle \phi_m^* \; B\phi_n \rangle =$$

$$\int [\iint \frac{\chi(E)}{4\pi} \; \phi_m^* \; (\bar{r},E,\bar{\Omega}) \; dEd\bar{\Omega} \iint \nu\Sigma_f \; (\bar{r},E') \; \phi_n \; (\bar{r},E',\bar{\Omega}') \; dE'd\bar{\Omega}'] \; dV. \tag{7.32}$$

Thus the orthogonality relationship given by Eqs. (7.14) and (7.15) may be written as

$$\langle f_m^* f_n \rangle = 0 \text{ for } m \neq n \tag{7.33}$$

$$\text{and } \langle f_m^* f_m \rangle \neq 0 \text{ for all } m \quad , \tag{7.34}$$

where $$f_n = F\phi_n = \iint \nu\Sigma_f \; (\bar{r},E') \; \phi_n \; (\bar{r},E',\bar{\Omega}') \; dE'd\bar{\Omega}' \tag{7.35}$$

and $$f_m^* = G\phi_m^* = \iint \frac{\chi(E)}{4\pi} \phi_m^* \; (\bar{r},E,\bar{\Omega}) \; dEd\bar{\Omega} \quad . \tag{7.36}$$

Here f_n is a fission neutron production density and f_n^* is its adjoint counterpart. Both f_n and f_n^* are functions of space only. The braces in Eqs. (7.33) and (7.34) indicate volume integrations.

Many of the equations developed in this chapter can be formulated using the notation defined by Eqs. (7.35) and (7.36). For example, the requirement upon the function Γ given by Eq. (7.5) can be written as

$$\langle f^* F\Gamma \rangle = 0 \quad . \tag{7.37}$$

Similarly, Eq. (7.7) can be written as

$$F\Gamma = F\Gamma_G - \frac{\langle f^* F\Gamma_G \rangle}{\langle f^* f \rangle} f \quad . \tag{7.38}$$

Equation (7.38) removes the fundamental mode component f from any function $F\Gamma_G$ to obtain the function $F\Gamma$ which obeys Eq. (7.37). Equation (7.38) will be used in the numerical computation of generalized functions.

The eigenfunction expansions discussed up to this point have been for the function Γ. Similarly, the function Γ^* defined by

$$(A^* - \lambda B^*)\ \Gamma^* = S^* \tag{7.39}$$

$$\text{and } \langle \Gamma^* B\phi \rangle = 0 \tag{7.40}$$

can be expanded using adjoint eigenfunctions. This result is

$$\Gamma^* = \psi^* + \sum_m \frac{\lambda}{(\lambda_m - \lambda)} \frac{\langle \psi^* B\phi_m \rangle}{\langle \phi_m^* B\phi_m \rangle} \phi_m^* \quad , \tag{7.41}$$

where $A^*\psi^* = S^*$. (7.42)

Notice that Eq. (7.41) is very similar to Eq. (7.28).

CHAPTER VIII

DISCUSSION OF GENERALIZED PERTURBATION THEORY

The purpose of this chapter is to explore some of the properties of the generalized perturbation theory equations developed in Chapters V and VI. Particular attention is given to the generalized sources S and S* and the physical requirement that criticality must be maintained.

The generalized equations developed in Chapter V and VI involve the functions Γ and Γ^* defined by

$$(A-\lambda B)\,\Gamma = S \;, \tag{8.1}$$

$$\langle \phi^* B \Gamma \rangle = 0 \;, \tag{8.2}$$

$$(A^*-\lambda B^*)\,\Gamma^* = S^* \;, \tag{8.3}$$

$$\text{and } \langle \Gamma^* B \phi \rangle = 0 \;. \tag{8.4}$$

More general solutions to Eqs. (8.1) and (8.3) are

$$\Gamma_G = \Gamma + C\phi \tag{8.5}$$

$$\text{and } \Gamma_G^* = \Gamma^* + C\phi^* \;, \tag{8.6}$$

where C is an arbitrary constant. When the operator $(A-\lambda B)$ represents a matrix, its determinant is zero which means Eq. (8.1) has no unique solution. The arbitrary constant C in Eq. (8.5) also indicates that there is no unique solution but rather a family of solutions. Equations (8.1) and (8.2) have a unique solution while Eq. (8.1) alone does not.

There are restrictions upon S and S* which are necessary in order for Eqs. (8.1) and (8.3) to have solutions. The restriction upon S is found by multiplying Eq. (8.1) by ϕ^* and integrating to obtain

$$\langle\phi^*(A-\lambda B)\Gamma\rangle = \langle\phi^* S\rangle \quad . \tag{8.7}$$

The definition of an adjoint operator is used to obtain

$$\langle\Gamma(A^*-\lambda B^*)\phi^*\rangle = \langle\phi^* S\rangle \quad . \tag{8.8}$$

Since the defining equation for ϕ^* is

$$(A^*-\lambda B^*)\phi^* = 0 \quad , \tag{8.9}$$

Eq. (8.8) becomes

$$\langle\phi^* S\rangle = 0 \quad . \tag{8.10}$$

Thus S must satisfy Eq. (8.10) in order for Eq. (8.1) to have a solution. By multiplying Eq. (8.3) by ϕ and following a procedure similar to that used in Eqs. (8.7) through (8.10), the requirement which S* must satisfy for Eq. (8.3) to have a solution is found to be

$$\langle\phi S^*\rangle = 0 \quad . \tag{8.11}$$

All of the generalized sources S and S* which appear in Chapters V and VI meet the requirements given by Eqs. (8.10) and (8.11). To demonstrate this, Eq. (5.12) is repeated here

$$S^* = \frac{\Sigma_1}{\langle\Sigma_1\phi\rangle} - \frac{\Sigma_2}{\langle\Sigma_2\phi\rangle} \quad . \tag{8.12}$$

It is easily seen that S^* in Eq. (8.12) satisfies the requirement given by Eq. (8.11).

Physically Eq. (8.1) represents a source in a critical system. Therefore, if S is a positive source, no time-independent solution is possible. However, since ϕ^* is a positive function, S must be positive at some points in phase space and negative at others in order to satisfy Eq. (8.10). Since ϕ^* is the importance of neutrons to criticality, Eq. (8.10) requires that the importance weighted positive source exactly counteract the importance weighted negative source. This cancellation "permits" a time-independent solution to exist. Ordinarily, superposition would allow one to separately solve the transport equation with the positive and negative sources and then add these partial solutions to obtain the desired result. This cannot be done with Eq. (8.1), however, since neither the positive nor the negative source satisfies Eq. (8.10).

Generalized perturbation theory can be used to predict the change in a performance parameter R caused by the introduction of a perturbation in a critical reactor. Recall that the generalized perturbation theory equations developed in Chapters V and VI allowed the perturbation to change the system eigenvalue. This formulation is valid in a mathematical sense, but it can lead to incorrect physical interpretations. For example, these equations would predict that the breeding ratio of a reactor could be made as large as desired by removing fissile material and adding fertile material. This result is correct mathematically but of little practical use since the reactor would be subcritical. Therefore, only perturbations that do not affect the eigenvalue are physically significant.

One way to maintain criticality is to introduce a criticality reset mechanism. Consider the reset perturbation represented by δA_R and δB_R that can be introduced along with any other perturbation represented by δA and δB in order to maintain criticality. An example of a reset mechanism is the change in the amount of fissile material in the fuel. Substituting both of these perturbations into the equation for the first order estimate for $\delta\lambda$ (see Chapter IV) results in

$$\delta\lambda \approx \frac{\langle\phi^*[\delta A-\lambda\delta B+C(\delta A_R-\lambda\delta B_R)]\phi\rangle}{\langle\phi^* B\phi\rangle} \quad , \tag{8.13}$$

where C is a factor which adjusts the magnitude of the reset perturbation such that $\delta\lambda$ is zero. Setting the numerator of Eq. (8.13) to zero and solving for C yields

$$C = -\frac{\langle\phi^*(\delta A-\lambda\delta B)\phi\rangle}{\langle\phi^*(\delta A_R-\lambda\delta B_R)\phi\rangle} \quad . \tag{8.14}$$

The change in a linear ratio resulting from the introduction of a perturbation along with the corresponding criticality reset perturbation is

$$\frac{\delta R}{R} \approx \langle\Gamma^*[(\delta A-\lambda\delta B) + C\ (\delta A_R-\lambda\delta B_R)]\phi\rangle \quad . \tag{8.15}$$

Only indirect effects are considered in Eq. (8.15). Substituting Eq. (8.14) into Eq. (8.15) results in

$$\frac{\delta R}{R} \approx \langle\Gamma^*+C_R\phi^*)(\delta A-\lambda\delta B)\phi\rangle \quad , \tag{8.16}$$

where

$$C_R = -\frac{\langle\Gamma^*(\delta A_R-\lambda\delta B_R)\phi\rangle}{\langle\phi^*(\delta A_R-\lambda\delta B_R)\phi\rangle} \quad . \tag{8.17}$$

Notice that C_R does not depend upon the perturbation represented by δA and δB but only on the reset perturbation represented by δA_R and δB_R. Thus, once the reset mechanisn is chosen, Eq. (8.16) can be used to calculate the effect of a large number of perturbations. Note that adding a fundamental mode component to the generalized function Γ^* corresponds to a criticality reset correction for generalized perturbation theory.

CHAPTER IX

AN ANALYTIC EXAMPLE USING GENERALIZED PERTURBATION THEORY

The purpose of this chapter is to demonstrate the use of generalized perturbation theory equations by solving a simple analytic example. Many of the properties discussed in Chapters V through VIII can be illustrated in this manner.

The system chosen for consideration is a two-group infinite homogeneous medium. For this case, the transport operators are 2 by 2 matrices. The parameters for the first group are arbitrarily assigned as $\Sigma_c = 3$, $\Sigma_f = 1$, $\Sigma_{1\to 2} = 1$, $\bar{\nu} = 4$, and $\chi = (0.75, 0.25)$, where the symbols have their usual definitions. Similarly, the parameters for the second group are assigned as $\Sigma_c = 1$, $\Sigma_f = 1$, $\Sigma_{2\to 1} = 0$, $\bar{\nu} = 2$, and $\chi = (0.5, 0.5)$. Notice that separate fission spectra were assigned for the two groups. The reason for choosing separate fission spectra for this example is that the resulting system has two nonzero eigenfunctions. Also notice that for each group the absorption $(\Sigma_c + \Sigma_f)$ equals the neutron production $(\nu\Sigma_f)$; therefore, the system is critical.

The system just defined is described by the following matrix equation

$$(A - \lambda B)\phi = 0 \quad , \tag{9.1}$$

where

$$A = \begin{bmatrix} 5 & 0 \\ -1 & 2 \end{bmatrix} \quad , \tag{9.2}$$

and

$$B = \begin{bmatrix} 3 & 1 \\ 1 & 1 \end{bmatrix} \quad . \tag{9.3}$$

The notation used in previous chapters has been retained with the understanding that A and B are matrices and ϕ is a vector. The characteristic

equation for this problem is

$$\begin{vmatrix} (5-3\lambda) & -\lambda \\ (-1-\lambda) & (2-\lambda) \end{vmatrix} = 0 \quad . \tag{9.4}$$

The fundamental mode solution is $\lambda = 1$ and $\phi = (1, 2)$. Note that the normalization of the vector ϕ has been arbitrarily chosen. There also exists another mode given by $\lambda_1 = 5$ and $\phi_1 = (1, -2)$.

The adjoint criticality equation is

$$(A^*-\lambda B^*)\phi^* = 0 \quad , \tag{9.5}$$

where

$$A^* = A^T \tag{9.6}$$

and

$$B^* = B^T \quad . \tag{9.7}$$

The "T" superscript indicates a matrix transpose. The fundamental mode solution for Eq. (9.5) is $\lambda = 1$ and $\phi^* = (1, 1)$. The second mode is given by $\lambda_1 = 5$ and $\phi_1{}^* = (3, -5)$. Note that the eigenvalues of the forward and adjoint equations are the same. Also, the orthogonality relationships given by

$$<\phi^* B\phi_1> = 0 \tag{9.8}$$

and

$$<\phi_1{}^* B\phi> = 0 \tag{9.9}$$

are easily verified since $B\phi_1 = (1, -1)$ and $B\phi = (5,3)$. The notation used in previous chapters has been retained in Eq. (9.8) and is interpreted as

$$<\phi^* B\phi_1> = \phi^{*T} B\phi_1 \quad . \tag{9.10}$$

The perturbation equation for $\delta\lambda$ which was developed in Chapter IV is illustrated by considering the perturbation given by

$$\delta A = \begin{bmatrix} \alpha & 0 \\ 0 & 0 \end{bmatrix} . \tag{9.11}$$

This perturbation represents a change in the capture cross section for the first group. The first order estimate for the change in λ which results from the perturbation is

$$\delta\lambda_0 = \frac{\langle\phi^*\delta A\phi\rangle}{\langle\phi^* B\phi\rangle} = \frac{\alpha}{8} . \tag{9.12}$$

The characteristic equation for the perturbed system can be solved to obtain the following exact result for the change in λ resulting from the perturbation α:

$$\delta\lambda = 2 + \frac{\alpha}{4} - \sqrt{\left(\frac{\alpha}{4}\right)^2 + \frac{\alpha}{2} + 4} . \tag{9.13}$$

A comparison of numerical results obtained using Eqs. (9.12) and (9.13) are shown in Table IX-1. The linear estimate $\delta\lambda_0$ agrees very well with the exact result $\delta\lambda$ for the small perturbation $\alpha = 0.01$. However, the linear estimate is about 10% high for the larger perturbation $\alpha = 1$.

Table IX-1. Exact and Linear Results for $\delta\lambda$

α	$\delta\lambda$	$\delta\lambda_0$	$\delta\lambda_{CD}$
1.0	0.1139991	0.1250000	0.1257288
−1.0	−0.1374586	−0.1250000	
0.10	0.0123835	0.0125000	0.0125007
−0.10	−0.0126179	−0.0125000	
0.01	0.0012488	0.0012500	0.0012500
−0.01	0.0012512	−0.0012500	

The linear estimate $\delta\lambda_0$ may be interpreted as $\left(\frac{d\lambda}{d\alpha}\right)\left(\delta\alpha\right)$, where the derivative is evaluated at $\alpha = 0$ (the reference state). Therefore, using the central difference equation for $\frac{d\lambda}{d\alpha}$, the following central difference estimate for $\delta\lambda_0$ is obtained

$$\delta\lambda_{CD} = \frac{\lambda(\alpha) - \lambda(-\alpha)}{2} \quad . \tag{9.14}$$

In Table IX-1, $\delta\lambda_{CD}$ differs from $\delta\lambda_0$ by less than 1% for $\alpha = 1$ where $\delta\lambda$ differs from $\delta\lambda_0$ by roughly 10%. Thus, the comparison of $\delta\lambda_{CD}$ and $\delta\lambda_0$ is a good method of testing whether a value for $\delta\lambda$ obtained by perturbation theory is consistent with $\delta\lambda_{CD}$ obtained using direct calculations of perturbed states. The central difference formula is exact for quadratic functions and is thus a higher order approximation than linear perturbation theory which corresponds to a forward difference approximation. This method of comparison will be used in later chapters to verify the accuracy of linear predictions.

Generalized perturbation theory can be used to estimate the change in linear ratios given by

$$R = \frac{\langle\Sigma_1\phi\rangle}{\langle\Sigma_2\phi\rangle} \quad . \tag{9.15}$$

For this example, the following special case of Eq. (9.15) is chosen:

$$R = \frac{\phi_1}{\phi_2} \quad , \tag{9.16}$$

where $\Sigma_1 = (1,0)$ and $\Sigma_2 = (0,1)$. The generalized source for a linear ratio is given by

$$S^* = \frac{\Sigma_1}{\langle\Sigma_1\phi\rangle} - \frac{\Sigma_2}{\Sigma_2\phi\rangle} \quad . \tag{9.17}$$

Using $\phi = (1,2)$, it is found that $\langle\Sigma_1\phi\rangle = 1$, $\langle\Sigma_2\phi\rangle = 2$, and $S^* = (1, -0.5)$. The vector S^* obeys the source requirement

$$\langle\phi S^*\rangle = 0.$$

The generalized adjoint Γ^* is defined by the equations

$$(A^*-\lambda B^*)\Gamma^* = S^* \tag{9.18}$$

$$\text{and } \langle\Gamma^* B\phi\rangle = 0 \quad . \tag{9.19}$$

The equations can be written as

$$2\ \Gamma_1^* - 2\ \Gamma_2^* = 1 \quad , \tag{9.20}$$

$$-\ \Gamma_1^* + \Gamma_2^* = -0.5 \quad , \tag{9.21}$$

$$\text{and } 5\ \Gamma_1^* + 3\ \Gamma_2^* = 0 \quad . \tag{9.22}$$

Note that Eq. (9.21) is a multiple of Eq. (9.20). Solving for Γ_1^* and Γ_2^* results in $\Gamma^* = \left(\frac{3}{16}, -\frac{5}{16}\right)$.

A second way of obtaining Γ^* is an eigenfunction expansion given for the two group case by

$$\Gamma^* = \psi^* + \frac{\lambda}{\lambda_1-\lambda}\,\frac{\langle\psi^* B\phi_1\rangle}{\langle\phi_1^* B\phi_1\rangle}\,\phi_1^* \quad , \tag{9.23}$$

$$\text{where } A^*\psi^* = S^* \quad . \tag{9.24}$$

Solving Eq. (9.24) results in $\psi^* = \left(\frac{3}{20}\ ,\ -\frac{1}{4}\right)$. The coefficient for ϕ_1^* can be evaluated by using

$$\lambda = 1,\ \lambda_1 = 5,\ \langle\psi^* B\phi_1\rangle = \frac{2}{5} \text{ and } \langle\phi_1^* B\phi_1\rangle = 8.$$

Equation (9.23) then becomes

$$\Gamma^* = \psi^* + \frac{1}{80}\,\phi_1^* \quad .$$

Using $\phi_1^* = (3, -5)$, it is found that $\Gamma^* = \left(\frac{3}{16}, -\frac{5}{16}\right)$ which is the same result obtained above.

A third way to obtain Γ^* is to use the Neumann series

$$\Gamma^* = \sum_{n=0}^{\infty} \psi_n^* \quad , \tag{9.25}$$

where

$$A^*\psi_0^* = S^* \tag{9.26}$$

and

$$A^*\psi_n^* = \lambda B^*\psi_{n-1}^* \text{ for } n=1 \text{ to } \infty \quad . \tag{9.27}$$

It was previously determined that $\psi_0^* = \left(\frac{3}{20}, -\frac{1}{4}\right)$. The source in Eq. (9.27) for n=1 is $\lambda B^*\psi_0^* = \left(\frac{1}{5}, -\frac{1}{10}\right)$. Noting that this source is the original S^* divided by 5, Eq. (9.25) becomes

$$\Gamma^* = \psi^*\left[1 + \frac{1}{5} + \left(\frac{1}{5}\right)^2 + \left(\frac{1}{5}\right)^3 + \cdots\right] = \frac{5}{4}\psi^* \quad . \tag{9.28}$$

Thus the same result, $\Gamma^* = \left(\frac{3}{16}, -\frac{5}{16}\right)$, is obtained using each of the three methods.

The first order estimate for the $\frac{\delta R}{R}$ resulting from the perturbation given by Eq. (9.11) is

$$\left(\frac{\delta R}{R}\right)_0 = -\langle\Gamma^*\delta A\phi\rangle = -\frac{3}{16}\alpha \quad . \tag{9.29}$$

The transport equation for the second group [from Eq. (9.1)] is

$$-\phi_1 + 2\phi_2 - \lambda\phi_1 - \lambda\phi_2 = 0 \quad . \tag{9.30}$$

Since the perturbation given by Eq. (9.11) occurs only in the first group, the perturbed equation for the second group is

$$-\phi_1' + 2\phi_2' - \lambda'\phi_1' - \lambda'\phi_2' = 0 \quad . \tag{9.31}$$

Solving for R′ results in

$$R' = \frac{\phi_1'}{\phi_2'} = \frac{2 - \lambda'}{1 + \lambda'} = \frac{1 - \delta\lambda}{2 + \delta\lambda} \quad . \tag{9.32}$$

Using $R = \frac{1}{2}$, an exact result for $\frac{\delta R}{R}$ is

$$\frac{\delta R}{R} = \frac{R'}{R} - 1 = 2R' - 1 = \frac{-3\delta\lambda}{2+\delta\lambda} \quad , \tag{9.33}$$

where $\delta\lambda$ is given by Eq. (9.13).

A comparison of numerical results obtained using Eqs. (9.29) and (9.33) are shown in Table IX-2. The linear estimate agrees very well for the small perturbation $\alpha = 0.01$. However, the linear estimate is in error by about 15% for $\alpha = 1$. The central difference approximation differs from the linear result by about 2% for $\alpha = 1$.

Table IX-2. Exact and Linear Results for $\delta R/R$

α	$\frac{\delta R}{R}$	$\left(\frac{\delta R}{R}\right)_0$	$\left(\frac{\delta R}{R}\right)_{CD}$
1.0	−0.1617774	−0.1875000	−0.1915911
−1.0	0.2214049	0.1875000	
0.10	−0.0184610	−0.0187500	−0.0187540
−0.10	0.0190470	0.0187500	
0.01	−0.0018721	−0.0018750	−0.0018750
−0.01	0.0018779	0.0018750	

The problem defined by Eqs. (9.1), (9.2), and (9.3) can be modified by using the same fission spectrum for both groups. If the fission spectrum is $\chi = (0.5, 0.5)$, then, Eq. (9.3) becomes

$$B = \begin{bmatrix} 2 & 1 \\ 2 & 1 \end{bmatrix} \quad . \tag{9.34}$$

For this problem, there is only one eigenvalue ($\lambda = 1$), and the eigenfunctions are $\phi = (1, 3)$ and $\phi^* = (1, 1)$. This problem will not be discussed further except to note that the Neumann series for Γ^* terminates after the first term such that

$$\Gamma^* = \psi^* \quad . \tag{9.35}$$

CHAPTER X

COMPUTATIONAL PROCEDURES FOR GENERALIZED FUNCTIONS

The purpose of this chapter is to describe the procedure that has been implemented for calculating the generalized functions Γ and Γ^*. The modifications that were made in the computer program DOT IV[7] in order to perform these calculations are described.

One equation normally solved by DOT IV may be written as

$$(A-B)\ \phi = S \quad , \tag{10.1}$$

where S is a non-negative source. The equations describing the generalized function Γ are

$$(A-\lambda B)\ \Gamma = S \tag{10.2}$$

$$\text{and } \langle\phi^* B\Gamma\rangle = 0 \quad , \tag{10.3}$$

$$\text{where } \langle\phi^* S\rangle = 0 \quad . \tag{10.4}$$

Equation (10.1) is solved in DOT IV using an outer iteration procedure which may be written as

$$A\phi^n = B\phi^{n-1} + S \quad , \tag{10.5}$$

where the superscript refers to the outer iteration number. A similar outer iteration procedure for Eq. (10.2) is

$$A\Gamma^n = \lambda B\Gamma^{n-1} + S \quad . \tag{10.6}$$

Equation (10.6) is mathematically equivalent to the Neumann series solution for Γ used by Usachev,[2] Gandini,[3] and Stacey[4] provided the initial guess for Γ is zero at all points in phase space.

Comparing Eq. (10.5) and (10.6) reveals that the two equations are of the same form except for the presence of the λ in Eq. (10.6). Therefore an option was added to DOT IV which accounts for the λ in Eq. (10.6) by multiplying the fission spectrum χ by λ. The numerical value for λ must be supplied to DOT IV as an input parameter.

Another consideration in the numerical calculation of Γ is to insure that the requirement given by Eq. (10.3) is satisfied. Equation (10.3) requires that $B\Gamma$ contain no fundamental mode component. In order to investigate this requirement, Eq. (10.6) is multiplied by ϕ^* and integrated to obtain

$$\langle\phi^* A\Gamma^n\rangle = \lambda \langle\phi^* B\Gamma^{n-1}\rangle + \langle\phi^* S\rangle \quad . \tag{10.7}$$

Using Eq. (10.4) and the result

$$\langle\phi^* A\Gamma^n\rangle = \langle\Gamma^n A^*\phi^*\rangle = \lambda \langle\Gamma^n B^*\phi^*\rangle = \lambda \langle\phi^* B\Gamma^n\rangle \quad , \tag{10.8}$$

Eq. (10.7) becomes

$$\langle\phi^* B\Gamma^n\rangle = \langle\phi^* B\Gamma^{n-1}\rangle \quad . \tag{10.9}$$

Therefore, in principle, if the initial guess for Γ obeys Eq. (10.3), then Γ^n obeys Eq. (10.3) for all n. Notice that the Neumann series solution for Γ always obeys Eq. (10.3).

In computer calculations there are a number of factors which tend to introduce some fundamental mode component into $B\Gamma^n$ even if the initial guess contains no fundamental mode. For example, the source S will not exactly satisfy Eq. (10.4). Also, the discrete ordinates difference equations do not necessarily obey the adjoint operator relationships

assumed in Eq. (10.8). In addition, DOT IV solves Eq. (10.6) for any outer iteration n by performing inner iterations, and it is often convenient to allow the outer and inner iterations to converge together rather than to converge the inners very tightly for each outer. For these reasons, a "sweeping" procedure was added to a special purpose version of the subroutine FISCON in DOT IV in order to remove any fundamental mode from the fission source $\lambda B\Gamma^{n-1}$ in Eq. (10.6). A similar sweeping procedure is presently used in the version of ANISN[6] which calculates generalized functions.[13] In order to describe this sweeping procedure, the neutron production density notation defined in Chapter VII is introduced in Eqs. (10.6) and (10.3) to obtain

$$A\Gamma^{n} = \lambda\chi F\Gamma^{n-1} + S \tag{10.10}$$

$$\text{and } \langle f^{*}F\Gamma\rangle = 0 \quad . \tag{10.11}$$

The equation developed in Chapter VII for obtaining a fission neutron production density which obeys Eq. (10.11) is

$$F\Gamma = F\Gamma' - \frac{\langle f^{*}F\Gamma'\rangle}{\langle f^{*}f\rangle} f \quad . \tag{10.12}$$

In the present application, the fission source in Eq. (10.10) is calculated using the generalized flux from the previous iteration Γ^{n-1}. Then Eq. (10.12) is used to remove any fundamental mode from this source. Thus the fission source in Eq. (10.10) is forced to obey Eq. (10.11) for each outer. As the outer iterations converge, the amount of fundamental mode removed by the sweeping procedure should become small. The functions f and f* which are obtained from eigenvalue calculations are part of the input required for the generalized function calculation.

It can be seen from Eqs. (10.3) and (10.4) that the functions Γ and and S are positive in some parts of phase space and negative in others. Since the difference equations ordinarily solved by discrete ordinates codes such as DOT IV are based on the assumption of positive fluxes and non-negative sources,[10,14] the presence of positive and negative sources presents a considerable problem. This is not true for diffusion theory calculations since the difference equations for diffusion theory are not based upon a positive flux assumption. The method chosen by Oblow[5] to calculate generalized fluxes using the one-dimensional discrete ordinates computer program ANISN is to use the linear model[10] supplementary difference equations which do not depend upon the sign of the fluxes. However, several difficulties have been encountered with this approach. The linear equations require a very fine space mesh which makes it difficult to choose an adequate space mesh. Also, the acceleration of inner iteration convergence was adversely affected. These limitations cannot be tolerated for two-dimensional calculations where an economical space mesh and rapid convergence of the inner iterations are essential. Therefore, the method implemented in DOT IV is to partition the source in Eq. (10.10) into a positive source and a negative source and perform the flux calculation for one outer iteration using these sources separately. By changing the sign of the negative source, this partitioning results in all positive flux calculations. Thus the highly developed inner iteration acceleration methods utilized in DOT IV may be used. Also relatively coarse space meshes are acceptable. The fluxes from the positive and negative calculations are used to calculate the fission source for the next outer iteration. The partitioning of sources is merely a mechanism

for avoiding the negative flux problem. The fission source calculated by each outer iteration still obeys Eq. (10.11) and thus avoids the problem which would occur if the fission sources were not combined and then partitioned for each outer iteration. In this case the positive fission source would approach plus infinity and the negative fission source would approach minus infinity and significance problems would render any computer calculation worthless.

In order to implement the source partitioning method of solution, DOT IV was modified to accept a flux guess Γ and the source S in partitioned form. The fission source calculation was modified to calculate the fission neutron source resulting from the partitioned flux guess and to remove any fundamental mode component as described earlier. The fission source is then partitioned into positive and negative parts and an outer iteration performed to obtain the next iteration fluxes in partitioned form. Several modifications were required to implement this procedure. The fluxes in partitioned form provide the flux guess for the next outer iteration. The procedure outlined above is repeated for each outer until satisfactory convergence is obtained. Although the procedure implemented has been described for the forward function Γ, the modifications are also applicable to the adjoint function Γ^*. The sweeping procedure removes ϕ^* fundamental mode in the adjoint case.

The use of partitioned fluxes presents a minor roundoff problem when the fluxes are combined for use in perturbation calculations. The partitioning also requires two flux calculations for each group. However, the use of standard flux calculation techniques and relatively coarse space meshes are significant advantages which much more than counterbalance these difficulties.

CHAPTER XI

NUMERICAL EVALUATION OF PERTURBATION EQUATIONS

In Chapter IV a first order perturbation theory equation for changes in $\delta\lambda$ was derived. This result is

$$\delta\lambda_0 = \frac{\langle\phi^*(\delta A - \lambda\delta B)\phi\rangle}{\langle\phi^* B\phi\rangle} \quad . \tag{11.1}$$

In Chapters V and VI, generalized perturbation theory equations were obtained for indirect effects resulting from changes in the forward and adjoint flux. These results are

$$I_{\delta\phi} \approx -\langle\Gamma^*(\delta A - \lambda\delta B)\phi\rangle \tag{11.2}$$

and

$$I_{\delta\phi}{}^* \approx -\langle\phi^*(\delta A - \lambda\delta B)\Gamma\rangle \quad . \tag{11.3}$$

The numerator of Eq. (11.1) and Eqs. (11.2) and (11.3) all involve the same perturbation operators but different forward and adjoint functions. Also, the denominator of Eq. (11.1) is similar to the second term in the numerator of Eq. (11.1). Therefore, the discussion of numerical evaluation of perturbation theory equations in this chapter can be limited to the numerator of Eq. (11.1) without loss of generality.

The fission term in Eq. (11.1) requires the evaluation of the following integral

$$I_B = \langle\phi^*\delta B\phi\rangle \quad . \tag{11.4}$$

Writing Eq. (11.4) in more detail yields

$$I_B = \iiint \delta[\chi(E)\nu\sigma_f(\bar{r},E')]\phi(\bar{r},E')\phi^*(r,E)dE'dEdV \quad . \tag{11.5}$$

The terms in Eq. (11.5) have their usual definitions except that the Los Alamos convention of using the lower case "σ" to represent macroscopic cross sections and reserving the upper case "Σ" to indicate summation has been adopted. Equation (11.5) can be evaluated numerically using the results from a DOT IV calculation. The integrals over energy become summations over groups, and the integral over space becomes a summation over the space mesh to obtain

$$I_B = \sum_g \sum_{g'} \sum_z \delta\,[\chi(g)\nu\sigma_f\,(z,g')] \sum_{i\epsilon z} \phi(i,g')\phi^*(i,g)V_i \quad , \qquad (11.6)$$

where

g and g′ = group indices,

z = a zone index, and

i = a space mesh index.

The summations over the space meshes within a zone can be computed and saved, while the other summations must be performed after the perturbation is determined.

Another integral which must be evaluated in order to obtain $\delta\lambda_0$ using Eq. (11.1) is

$$I_A = \langle\phi^*\delta A\phi\rangle \quad . \qquad (11.7)$$

When A represents a transport theory operator, the perturbation operator δA consists of a total cross-section term and a scattering term such that

$$I_A = I_T - I_S$$

where

$$I_T = \iiint \delta\sigma_t(\bar{r},E)\phi(\bar{r},E,\bar{\Omega})\phi^*(\bar{r},E,\bar{\Omega})dEd\bar{\Omega}dV \qquad (11.8)$$

and

$$I_S = \iiiint\!\!\int \delta\sigma_s(\bar{r};E',\bar{\Omega}'\to E,\bar{\Omega})\phi(\bar{r},E',\bar{\Omega}')\phi^*(\bar{r},E,\bar{\Omega})d\bar{\Omega}'dE'dEd\bar{\Omega}dV \quad . \qquad (11.9)$$

For isotropic scattering, Eq. (11.9) reduces to an equation very similar to Eq. (11.5). However, anisotropic scattering presents additional problems which may be adequately discussed by dropping the energy and space dependence to obtain

$$J_S = \iint \delta\sigma(\bar{\Omega}\cdot\bar{\Omega}')\phi^*(\bar{\Omega})\phi(\bar{\Omega}')d\bar{\Omega}d\bar{\Omega}' \quad . \qquad (11.10)$$

In Eq. (11.10) it has been assumed that the scattering cross section depends only on the angle of scattering and not on the direction of travel. In DOT IV, anisotropic scattering is represented by the following Legendre series[10]

$$\sigma(\bar{\Omega}\cdot\bar{\Omega}') = \frac{1}{4\pi}\sum_{\ell=0}^{L}\sigma_\ell P_\ell(\bar{\Omega}\cdot\bar{\Omega}') \quad , \qquad (11.11)$$

where the series is truncated at L. Typical values of L are 1 and 3. The two-dimensional discrete ordinates result for a scattering source is[10]

$$\int\sigma(\bar{\Omega}\cdot\bar{\Omega}')\phi(\bar{\Omega}')d\bar{\Omega}' = \frac{1}{4\pi}\sum_{\ell=0}^{L}\sigma_\ell\sum_{m=0}^{\ell}\phi_{\ell,m}Y_\ell^m(\bar{\Omega}) \quad , \qquad (11.12)$$

where

$$Y_\ell^m(\bar{\Omega}) = \left[\frac{2}{1+\delta_{0,m}}\frac{(\ell-m)!}{(\ell+m)!}\right]^{\frac{1}{2}} P_\ell^m(\eta)\cos m\psi \quad , \qquad (11.13)$$

$$\phi_{\ell,m} = \int\phi(\bar{\Omega})\, Y_\ell^m(\bar{\Omega})d\bar{\Omega} \quad , \qquad (11.14)$$

P_ℓ^m is an associated Legendre Polynomial, η is a polar direction cosine, ψ is an azimuthal angle, and $\delta_{0,m}$ is the Kronecker delta function. Y_ℓ^m is a spherical harmonic which can be used to expand functions of angle

which are even functions of ψ. Equation (11.12) is derived using the addition theorem for Legendre polynomials. A detailed discussion of Eqs. (11.12), (11.13), and (11.14) is given by Mynatt et al.[10]

The spherical harmonics Y_ℓ^m obey the orthogonality relationship

$$\int Y_\ell^m(\overline{\Omega}) Y_j^k(\overline{\Omega}) d\overline{\Omega} = \frac{4\pi}{2\ell+1} \delta_{\ell,j} \delta_{m,k} \quad . \tag{11.15}$$

This orthogonality relationship can be used to obtain the following spherical harmonic expansion:

$$\phi(\overline{\Omega}) = \sum_{\ell=0}^{\infty} \sum_{m=0}^{\ell} \frac{2\ell+1}{4\pi} \phi_{\ell,m} Y_\ell^m(\overline{\Omega}) \quad . \tag{11.16}$$

A similar expansion for the adjoint flux is

$$\phi^*(\overline{\Omega}) = \sum_{\ell=0}^{\infty} \sum_{m=0}^{\ell} (2\ell+1) \phi^*_{\ell,m} Y_\ell^m(\overline{\Omega}) \quad , \tag{11.17}$$

where

$$\phi^*_{\ell,m} = \frac{1}{4\pi} \int \phi^*(\overline{\Omega}) \; Y_\ell^m(\overline{\Omega}) d\overline{\Omega} \quad . \tag{11.18}$$

Equation (11.17) is very similar to Eq. (11.16) except for a 4π term which arises because $\phi(\overline{\Omega})$ has units of neutrons/cm^2/sec/steradian while ϕ^* is a dimensionless quantity. Thus $\phi^*_{0,0}$ is the average importance of neutrons from an isotropic source.

Using Eqs. (11.12) and (11.17), Eq. (11.10) becomes

$$J_S = \int \sum_{\ell=0}^{\infty} \sum_{m=0}^{\ell} (2\ell+1) \phi^*_{\ell,m} Y_\ell^m(\overline{\Omega}) \sum_{j=0}^{L} \frac{\delta\sigma_j}{4\pi} \sum_{k=0}^{j} \phi_{j,k} Y_j^k(\overline{\Omega}) d\overline{\Omega} \quad . \tag{11.19}$$

Using the orthogonality relationship given by Eq. (11.15), Eq. (11.19) reduces to

$$J_S = \sum_{\ell=0}^{L} \delta\sigma_\ell \sum_{m=0}^{\ell} \phi_{\ell,m} \phi^*_{\ell,m} \quad . \tag{11.20}$$

In order to evaluate Eq. (11.14) numerically, DOT IV uses an angular quadrature such that[10]

$$\phi_{\ell,m} = \sum_{d} \phi(\overline{\Omega}_d) Y_{\ell}^{m}(\overline{\Omega}_d) \Delta\overline{\Omega}_d \quad , \tag{11.21}$$

where the d index indicates the discrete angles in the angular quadrature. A similar equation applies for the adjoint flux except that DOT IV solves for $\phi^*(-\overline{\Omega})$. In terms of the polar direction cosine η and azimuthal angle ψ, $\phi^*(-\overline{\Omega})$ is $\phi^*(-\eta,\psi+\pi)$. Using the relationships

$$P_{\ell}^{m}(-\eta) = (-1)^{\ell+m} P_{\ell}^{m}(\eta) \tag{11.22}$$

and

$$\cos m\,(\psi+\pi) = (-1)^{m} \cos m\,\psi \quad , \tag{11.23}$$

it follows that

$$Y_{\ell}^{m}(\overline{\Omega}) = (-1)^{\ell}\, Y\,(-\overline{\Omega}) \quad . \tag{11.24}$$

Therefore the flux moments $\phi^*_{\ell,m}$ calculated by DOT IV are multiplied by $(-1)^{\ell}$ before they are used in Eq. (11.20).

Returning to Eq. (11.9), the equation evaluated numerically for the scattering term is

$$I_S = \sum_{g}\sum_{g'}\sum_{z}\sum_{\ell=0}^{L} \delta\sigma_{\ell}(z,g',g) \sum_{i\varepsilon z}\sum_{m=0}^{\ell} \phi_{\ell,m}(i,g')\phi^*_{\ell,m}(i,g)V_i \quad , \tag{11.25}$$

where the notation established for the fission term has been used. The summations over i and m may be precomputed and saved while the g, g´, z, and ℓ summations must be performed after the perturbation is determined. The computer program VIP[15] has been developed to perform the i and m summations, reverse the adjoint energy groups, and include the $(-1)^{\ell}$ term discussed earlier. "VIP" is an acronym which stands for Volume Integrated

Product. Once the i summation is performed, the remaining sums do not depend upon the geometry being considered except through the zone dependence.

The final integral which must be evaluated for the perturbation equations is the total cross-section term given by Eq. (11.8) which includes an angular integration of the form

$$J_T = \int \phi(\overline{\Omega})\phi^*(\overline{\Omega})d\overline{\Omega} \quad . \tag{11.26}$$

In the one-dimension program SWANLAKE[16] this integration is performed using angular fluxes such that

$$J_T = \sum_d \phi(\overline{\Omega}_d)\phi^*(\overline{\Omega}_d)\Delta\overline{\Omega}_d \quad . \tag{11.27}$$

For two-dimensional applications, the number of angular fluxes is often large, and they are not routinely saved. An alternate way to evaluate Eq. (11.26) is to use the moment expansions given by Eqs. (11.16) and (11.17) to obtain

$$J_T = \int \sum_{\ell=0}^{\infty} \sum_{m=0}^{\ell} (2\ell+1)\phi^*_{\ell,m} Y^m_\ell(\overline{\Omega}) \sum_{j=0}^{\infty} \sum_{k=0}^{j} \frac{2\ell+1}{4\pi}\phi_{j,k} Y^k_j(\overline{\Omega})d\overline{\Omega} \quad . \tag{11.28}$$

Using the orthogonality relationship of Eq. (11.15), Eq. (11.28) reduces to

$$J_T = \sum_{\ell=0}^{\infty} \sum_{m=0}^{\ell} (2\ell+1)\phi_{\ell,m}\phi^*_{\ell,m} \quad . \tag{11.29}$$

If the series in Eq. (11.29) can be truncated at a relatively low value of ℓ, then the moments which are required for the scattering term can be used to obtain the total cross-section term without saving angular fluxes. Returning to Eq. (11.8), the equation evaluated in VIP for the total cross-section term is

$$I_T = \sum_g \sum_z \delta\sigma_t\,(z,g) \sum_{\ell=0}^{\ell}(2\ell+1)\sum_{i\varepsilon z}\sum_{m=0}^{\ell}\phi_{\ell,m}(i,g)\phi^*_{\ell,m}(i,g)V_i \quad . \qquad (11.30)$$

The summations over ℓ, i, and m are computed and saved by VIP.

Three different computer codes are available to read the tape written by VIP and perform the sums over g,g´, z, and ℓ which must be performed after the perturbation is determined in Eqs. (11.6), (11.25), and (11.30). These are SWANLAKE,[16] JULIET,[17] and TPERT.[18] SWANLAKE was originally written for shielding sensitivity analysis and calculates only the numerator of Eq. (11.1). JULIET is a version of SWANLAKE which uses a different cross-section file and also calculates generalized sources for one-dimensional cases. TPERT is a perturbation code which calculates both the numerator and denominator of Eq. (11.1).

CHAPTER XII

THE DEMONSTRATION PROBLEM

In order to obtain reactor physics information, the Applied Physics Division at Argonne National Laboratory has recently performed a number of critical assembly experiments. Measurements performed in these assemblies are compared with calculations in order to determine the adequacy of the nuclear data and calculational methods used for reactor design. The Carbide Benchmark[19] is the first of several planned critical assemblies designed to study the physics properties of advanced LMFBR fuels. This first assembly has a relatively simple, uniform composition which facilitates the testing of nuclear data and design analysis methods. Generalized perturbation theory is a useful tool for interpreting comparisons between calculations and measurements in critical assemblies since the sensitivity of the measurement to changes in nuclear data may be determined. The Carbide Benchmark is a good assembly for testing two-dimensional generalized perturbation theory calculations and will be used for all the demonstration calculations in this work.

The Carbide Benchmark experiment was performed at the ZPR-9 facility at Argonne, Illinois in 1977. This facility contains a movable half-core and a stationary half-core. Each half core consists of a matrix of drawers which are loaded with platelets containing plutonium, uranium, sodium, and other reactor materials. A detailed geometrical description of the Carbide Benchmark is found in Ref. 19. The Carbide Benchmark was constructed as nearly cylindrical as possible using the square matrix of drawers. The R-Z model[19] for the Carbide Benchmark is shown in Fig. XII-1. This model

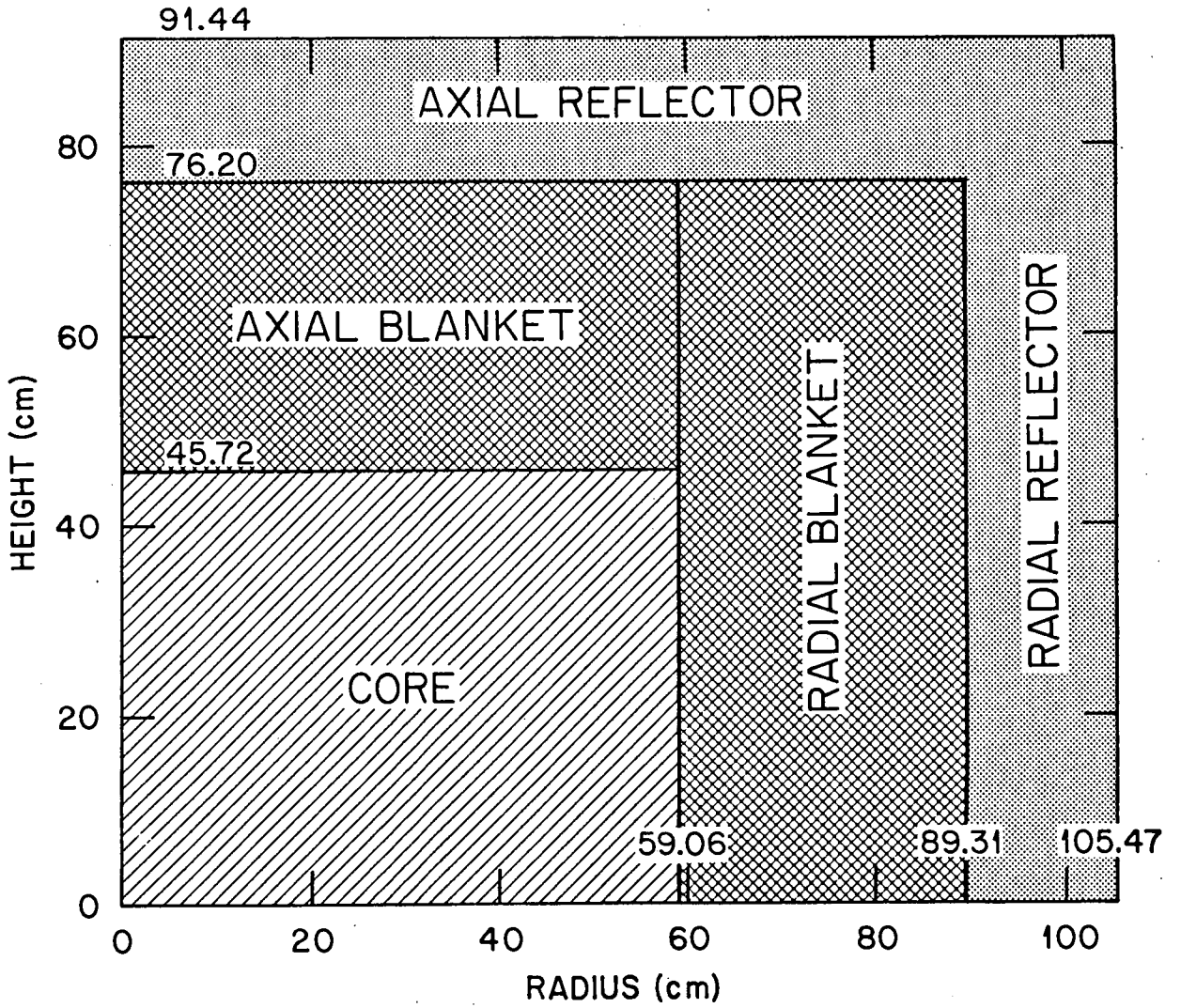

Fig. XII-1. The R-Z Model for the Carbide Benchmark.

represents one-half of the assembly, and the bottom boundary is reflected to account for the presence of the other half. The total core height is 36 in., the axial blanket is 12 in. thick, and the axial reflector is 6 in. thick. The critical mass[19] is 534.1 ± 5.4 kg of plutonium. The R-Z, diffusion theory calculations of the Carbide Benchmark performed at Argonne used 29 groups. However, for methods development and verification work, it is more economical to use fewer groups. Thus, a four-group cross section set was selected for this work. This cross-section library is a composition dependent, four-group, P_0-transport-corrected library developed by General Electric.[20] This library was prepared for use by the Large Core Code Evaluation Work Group[20] for the purpose of investigating methods and codes relevant to the design of a commercial size LMFBR. While this library is not fully applicable to the Carbide Benchmark and four groups are probably not adequate for reactor physics calculations to be compared with experiments, this library should be adequate for calculational methods verification. The use of an existing library saves the considerable effort required to obtain a cross-section library. The energy boundaries for this library are given in Table XII-1. Much additional information concerning this library is found in Ref. 20.

Table XII-1. Energy Boundaries for the Four-Group Library

Energy Boundary	Energy in eV
1	1.649 E+7
2	8.208 E+5
3	4.087 E+4
4	2.035 E+3
5	1.000 E–5

A detailed description of the composition of the Carbide Benchmark is found in Ref. 19. This description includes a number of trace elements not found in the four-group cross section set and slight differences between the compositions of the axial and radial blankets and reflectors. For the four-group calculations, the trace elements were not used and the axial blanket and reflector compositions were used for both the axial and radial blankets and reflectors. These compositions are shown in Table XII-2. The four-group library contains separate core, blanket, and reflector weighted cross sections for some elements and these were used in the corresponding zones for the Carbide Benchmark whenever possible.

Three VENTURE[21] diffusion theory calculations were performed for the Carbide Benchmark using the four-group cross section set and the calculation model described in this chapter. The mesh spacing was varied to study the effect of mesh size upon the calculated value of the k eigenvalue. These results are shown in Table XII-3. The 3-cm-mesh spacing is a relatively coarse space mesh. However, the calculated value of k obtained using this mesh differs by less than 0.1% from the result obtained for the 1.5 cm mesh. The 3-cm mesh was chosen for the DOT IV calculations to follow since this is a typical mesh for discrete ordinates calculations. In the radial direction, 20 equally spaced intervals are used in the core, 10 in the blanket, and 5 in the reflector. In the axial direction, 15 intervals are used in the core, 10 in the blanket, and 5 in the reflector. A series of DOT IV calculations were performed using this space mesh to study the effect of varying the angular quadrature. These results are shown in Table XII-4 and indicate that S_4 is adequate for calculating k. However, S_6 was chosen for the perturbation theory calculations to be

Table XII-2. Compositions for the Calculational Model

Element	Number Densities in atoms/barn-cm		
	Core	Blanket	Reflector
Fe	1.02432 E-2	8.4404 E-3	5.52268 E-2
Ni	1.3522 E-3	1.0892 E-3	6.9675 E-3
Cr	2.9309 E-3	2.4080 E-3	1.57707 E-2
Mo	3.500 E-4	9.7 E-6	9.7 E-6
C	1.08325 E-2	1.26111 E-2	2.456 E-4
Na	9.0842 E-3	9.3053 E-3	
U-235	2.14 E-5	2.59 E-5	
U-238	9.8203 E-3	1.20815 E-2	
Pu-239	1.3320 E-3		
Pu-240	1.766 E-4		
Pu-241	1.76 E-5		
Pu-242	2.7 E-6		

Table XII-3. Diffusion Calculations for k

Mesh Intervals (R x Z)	k	Mesh Spacing
35 x 30	0.98175	∿3 cm
53 x 46	0.98139	∿2 cm
70 x 60	0.98127	∿1.5 cm

Table XII-4. DOT IV Calculations for k

Calculation	k
diffusion	0.98158
S_2	0.98875
S_4	0.98566
S_6	0.98536

described in the next few chapters since generalized flux calculations might require higher angular resolution. The zone map, cross section set, space mesh, and angular quadrature described in this chapter are used for all the perturbation theory calculations to follow.

CHAPTER XIII

DEMONSTRATION PERTURBATION CALCULATIONS FOR CHANGES IN THE EIGENVALUE

In this chapter, the perturbation equation for changes in λ derived in Chapter IV is evaluated using the numerical techniques described in Chapter XI in order to demonstrate the usefulness of the numerical techniques. The first order result for the reactivity worth of a perturbation is

$$W = -\delta\lambda = -\frac{\langle\phi^*(\delta A - \lambda\delta B)\phi\rangle}{\langle\phi^* B\phi\rangle} \quad . \tag{13.1}$$

The central (peak) values of ϕ and ϕ^* for each group in the Carbide Benchmark demonstration problem are shown in Table XIII-1, and plots of ϕ and ϕ^* are shown in Figs. XIII-1 through XIII-4. The spatial shape of the

Table XIII-1. Fluxes at the Center of the Core

Group	ϕ	ϕ^*
1	6.73E-5	6.82E-5
2	2.40E-4	5.40E-5
3	7.89E-5	4.31E-5
4	8.54E-6	4.67E-5

forward and adjoint fluxes are similar for the first three groups. For the fourth group, the adjoint flux is smooth while the forward flux has local peaks in the blanket and the reflector. The largest forward flux occurs in the second group. The forward flux in group 4 is much lower than the flux in group 2 (a factor of 28 lower in the center). The adjoint flux peaks in the first group and is fairly constant with energy.

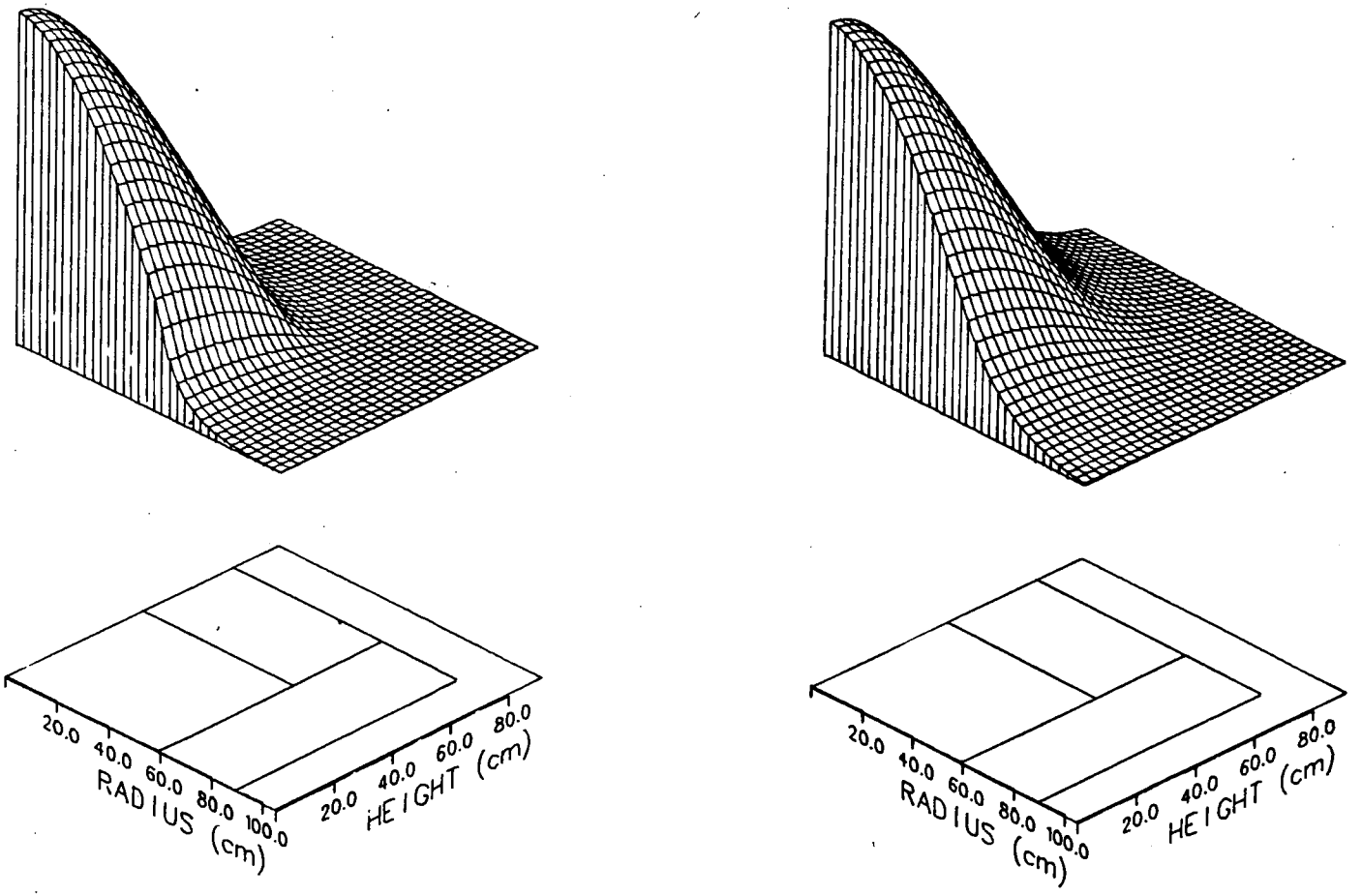

Fig. XIII-1. Plots of ϕ and ϕ^* for Group 1.

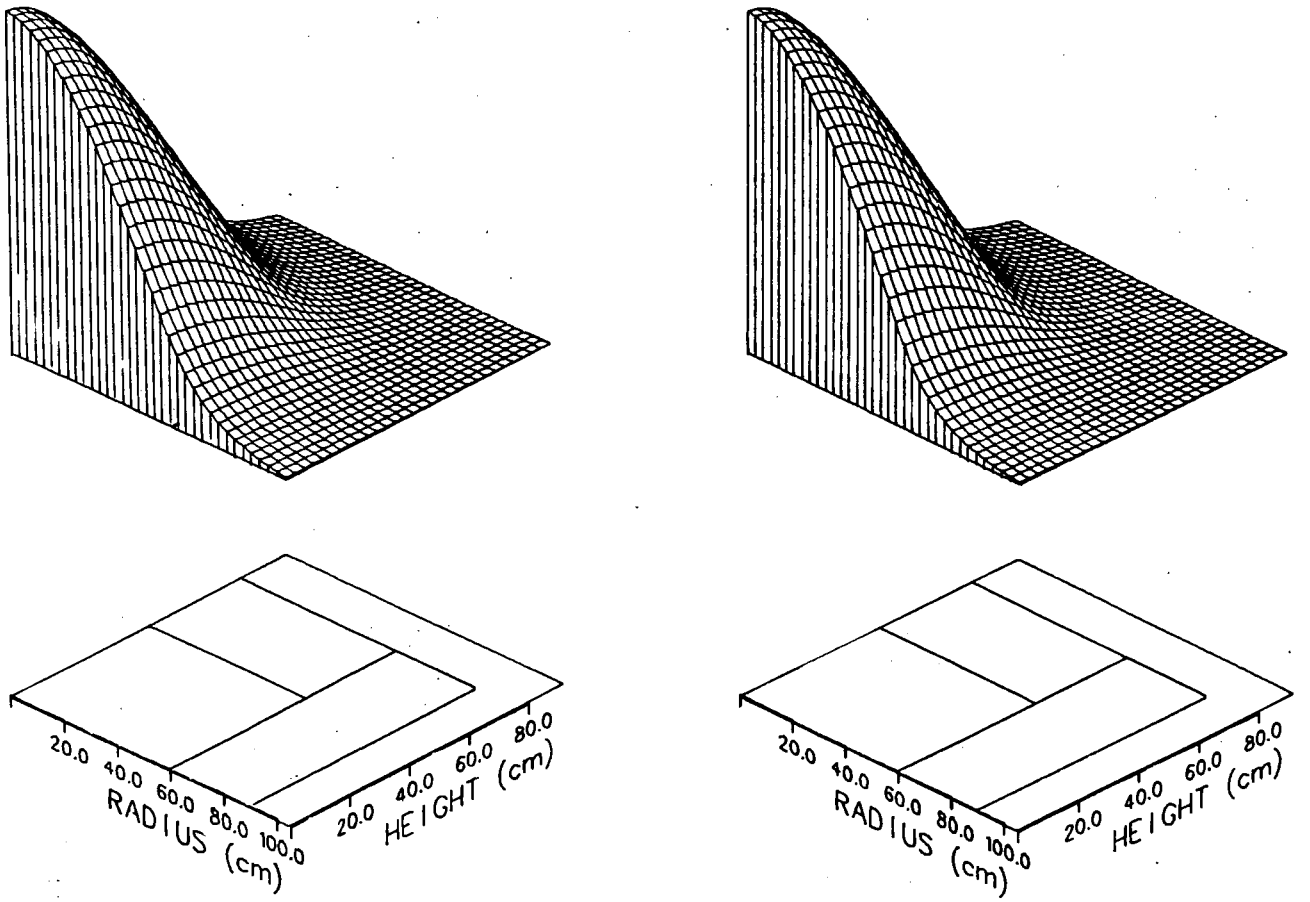

Fig. XIII-2. Plots of ϕ and ϕ^* for Group 2.

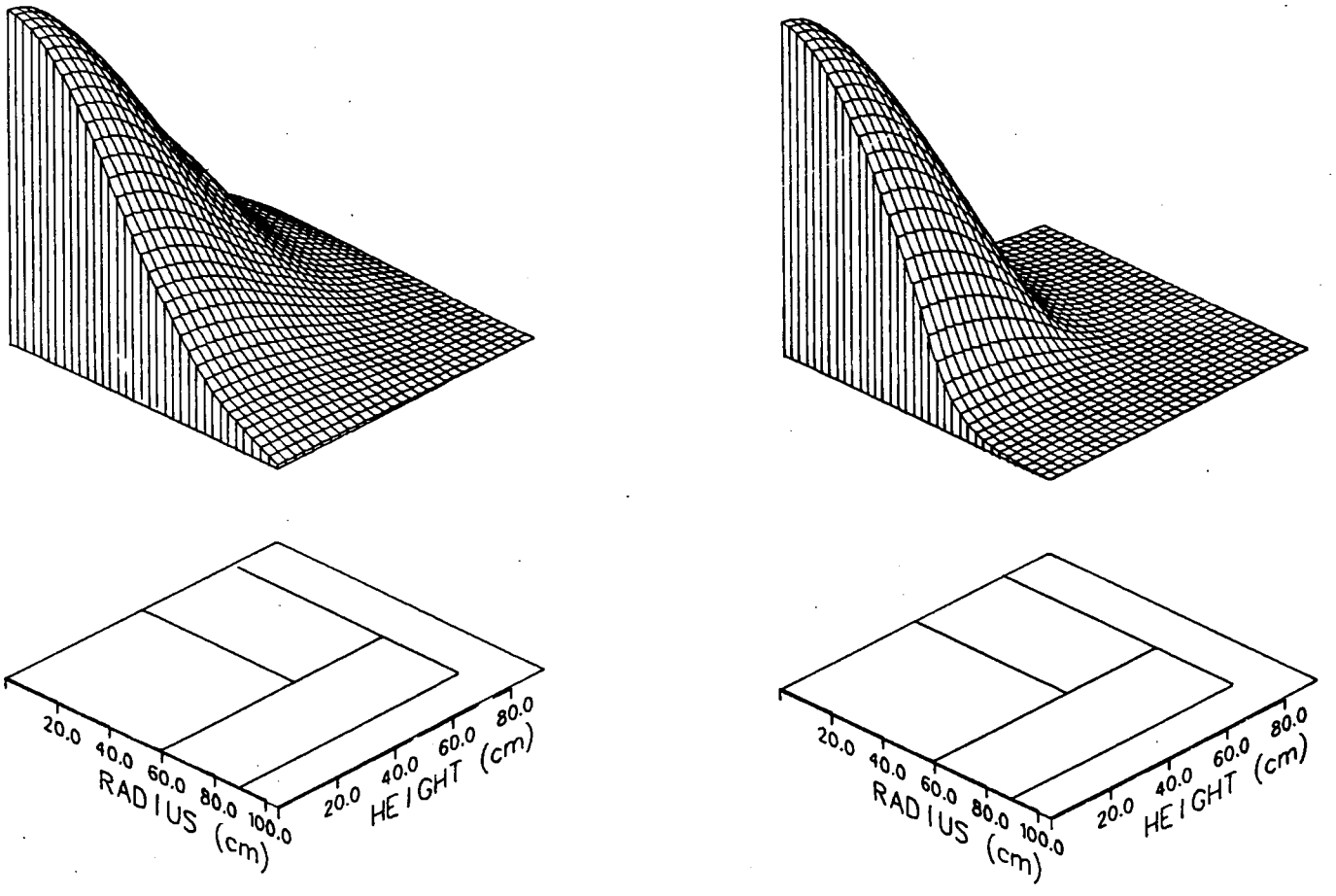

Fig. XIII-3. Plots of ϕ and ϕ^* for Group 3.

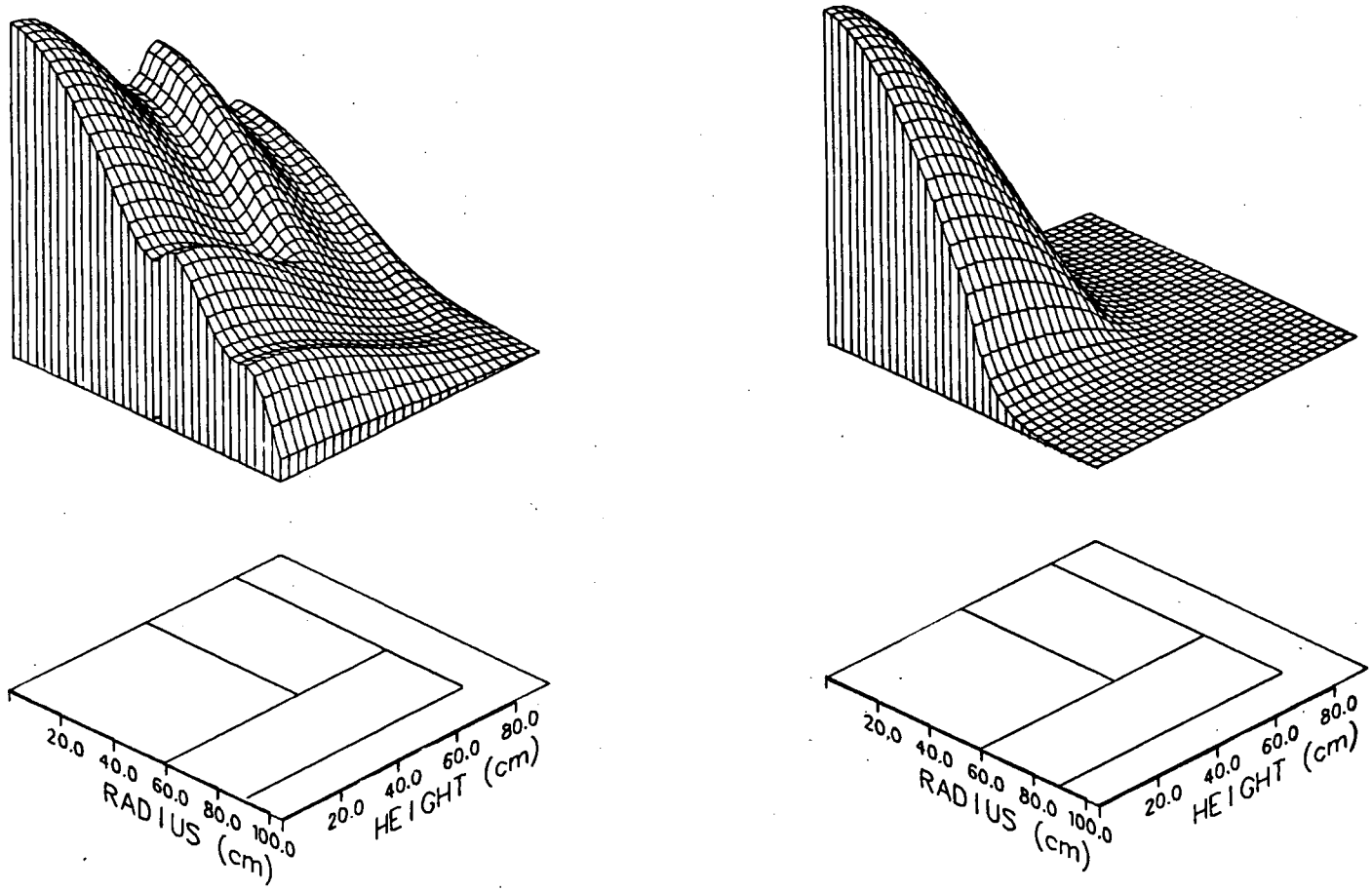

Fig. XIII-4. Plots of ϕ and ϕ^* for Group 4.

Two perturbations were selected for the demonstration calculations. These were changing the carbon and ^{239}Pu number densities in the core. A number of DOT IV calculations were performed in order to evaluate the worth of these perturbations directly. These results are summarized in Table XIII-2.

Table XIII-2. DOT-IV Eigenvalue Calculations

Core Number Density Perturbation	Calculation Mode	k
+10% for C	Forward	0.98322
+10% for C	Adjoint	0.98324
−10% for C	Forward	0.98751
−10% for C	Adjoint	0.98754
+10% for ^{239}Pu	Forward	1.03466
−10% for ^{239}Pu	Forward	0.93317
no perturbation	Forward	0.98536

These calculations were performed using single precision arithmetic on an IBM computer which uses only 24 binary bits to represent the mantissa of floating point numbers as a binary fraction. The first four significant figures in the values of k given in Table XIII-2 are probably not affected by loss of significance while the fifth significant figure is questionable.

In Chapter IX, two methods for comparing first order perturbation theory results with direct calculations were described. The first method is to compare the first order estimate of the effect of the perturbation. The results obtained in Chapter IX indicate that this method is accurate for small perturbations but not for larger perturbations. The worths of the C and Pu number density perturbations were calculated using the perturbation equation given by Eq. (13.1) and also using the direct calculation method given by

$$W = \lambda - \lambda' = \frac{1}{k} - \frac{1}{k'} \quad . \tag{13.2}$$

This comparison is shown in Table XIII-3.

Table XIII-3. Comparison of Worths from Direct Calculations and Linear Perturbation Theory

Core Number Density Perturbation	Direct Calculation	Linear Perturbation Theory	Percent Difference
+ 10% for C	−0.00221	−0.00215	−2.7%
− 10% for C	0.00221	0.00215	−2.7%
+ 10% for ^{239}Pu	0.04836	0.05235	8.3%
− 10% for ^{239}Pu	−0.05676	−0.05235	−7.8%

The agreement between the direct calculation and the perturbation theory result for the carbon perturbation must be considered good since the difference occurs in the fifth decimal place which is not known very well. The agreement for the plutonium number density perturbation is not as good because the perturbation is outside the linear range. The second method introduced in Chapter IX for comparing direct calculations with first order perturbation theory is to apply a central difference approximation to the direct calculations to obtain an estimate of the linear perturbation theory result. In Chapter IX, it was found that good agreement was obtained using the central difference method for relatively large perturbations because of the cancellation of second order terms. A comparison of linear perturbation theory and the central difference method is shown in Table XIII-4. The ^{239}Pu perturbation theory prediction agrees with the central difference direct method to within 0.5% which is very good agreement.

Table XIII-4. Comparison of Worths from Linear Perturbation Theory and Central Difference Direct Calculations

Core Number Density Perturbation	Central Difference Method	Linear Perturbation Theory	Percent Difference
10% for C	−0.00221	−0.00215	−2.7%
10% for ^{239}Pu	0.05256	0.05235	−0.4%

A better understanding of the perturbation theory results can be obtained by examining the individual terms in the perturbation equation. This is done in Table XIII-5.

Table XIII-5. Contributions to the Perturbation Results for Worth

	C Perturbation	^{239}Pu Perturbation
Total Cross-Section Term	−0.32071	−0.10269
Scattering Term	0.31856	0.07700
Fission Term	0	0.07804
Sum of Above	−0.00215	0.05235

The total cross section term and the scattering term for the carbon number density perturbation are roughly equal but opposite in sign. Thus, a great deal of cancellation occurs in the perturbation theory calculation. Calculations with large amounts of cancellation are difficult for perturbation theory methods. Since good results were obtained for the carbon perturbation which has considerable cancellation, the numerical procedures used in this chapter are probably adequate for most perturbation

cancellations. The plutonium perturbation has much less cancellation and is therefore better suited for perturbation methods.

The total cross section term in the perturbation equation was evaluated using the truncated Legendre series described in Chapter XI. The first order perturbation theory results for the perturbations considered in this chapter are shown in Table XIII-6 as a function of the order of the Legendre expansion for the total cross section term.

Table XIII-6. Variation of the Perturbation Prediction With Legendre Order

Legendre Order for the Total Cross-Section Term	Worth of the C Perturbation	Worth of the ^{239}Pu Perturbation
0	-0.00438	0.05166
1	-0.00216	0.05234
2	-0.00218	0.05234
3	-0.00215	0.05235

It appears that an expansion order of one (1) or greater is sufficient for these perturbations.

The methods used in this chapter are apparently adequate to perform eigenvalue perturbation calculations. The differences between perturbation theory results and direct calculations occurred in the fourth or fifth significant figure. These same methods will be applied to generalized perturbation theory calculations in Chapters XIV and XV.

CHAPTER XIV

DEMONSTRATION GENERALIZED PERTURBATION CALCULATIONS FOR LINEAR RATIOS

The linear ratio chosen for the demonstration calculations described in this chapter is the ^{238}U absorption to ^{239}Pu fission reaction rate ratio in the center of the Carbide Benchmark. This ratio was measured for the Carbide Benchmark, and Argonne's calculation disagreed with the measurement by more than 5%. Thus central reaction rate measurements of this type are of current interest in reactor physics. The four-group calculations performed here are not suitable for comparison with experimental measurements but are useful to verify methods which could be applied to more detailed physics calculations.

The generalized source for this problem is given by

$$S^* = \frac{\Sigma_1}{\langle\Sigma_1\phi\rangle} - \frac{\Sigma_2}{\langle\Sigma_2\phi\rangle} \tag{14-1}$$

where Σ_1 is the ^{238}U absorption cross section and Σ_2 is the ^{239}Pu fission cross section. Σ_1 and Σ_2 are zero outside the small region in the center of the reactor where the measurement was made. This source is well represented by a point source in space. The four-group source for the reaction-rate ratio is shown in Table XIV-1.

Table XIV-1. The Generalized Source for the Reaction-Rate Ratio

Group	Generalized Source
1	4.5056 E+4
2	-6.5157 E+4
3	1.5992 E+5
4	2.3061 E+5

Point sources in two-dimensional discrete ordinates transport calculations are best calculated using an analytic first-collision source which prevents ray effects.[10] In practice, the first-collision source method is implemented by calculating the uncollided flux in the center of each space mesh and using this value for the average flux in the mesh.[10] For generalized flux calculations, this approximation is not satisfactory since it does not preserve neutrons, and neutron conservation is necessary in order for the first collision source to obey the requirement

$$\langle S^*\phi \rangle = 0 \quad , \tag{14-2}$$

which must be obeyed by all generalized sources. The first-collision source program GRTUNCL[22] (pronounced Great Uncle) was modified in order to calculate the uncollided flux using the following equation:

$$\phi_i = \frac{1}{V_i} \int_{V_i} \frac{S}{4\pi r^2} e^{-\Sigma t r} \, dV \quad , \tag{14-3}$$

which obtains the average uncollided flux for each mesh in a rigorous manner. The integral in Eq. (14-3) is calculated in spherical coordinates for each R-Z space mesh using a numerical integration.

GRTUNCL was further modified to prepare a partitioned generalized source for use in DOT IV. The modified version of DOT IV described in Chapter X was used to calculate Γ^* for the reaction-rate ratio. Discussion of the convergence of generalized flux calculations is deferred until Chapter XVII. Plots of Γ^* for each group are shown in Figs. XIV-1 through XIV-4. Two plots are shown for each group. Since the average flux is large in mesh intervals near the point source, the scaling of the vertical axis required to plot Γ^* tends to emphasize only the flux near the source

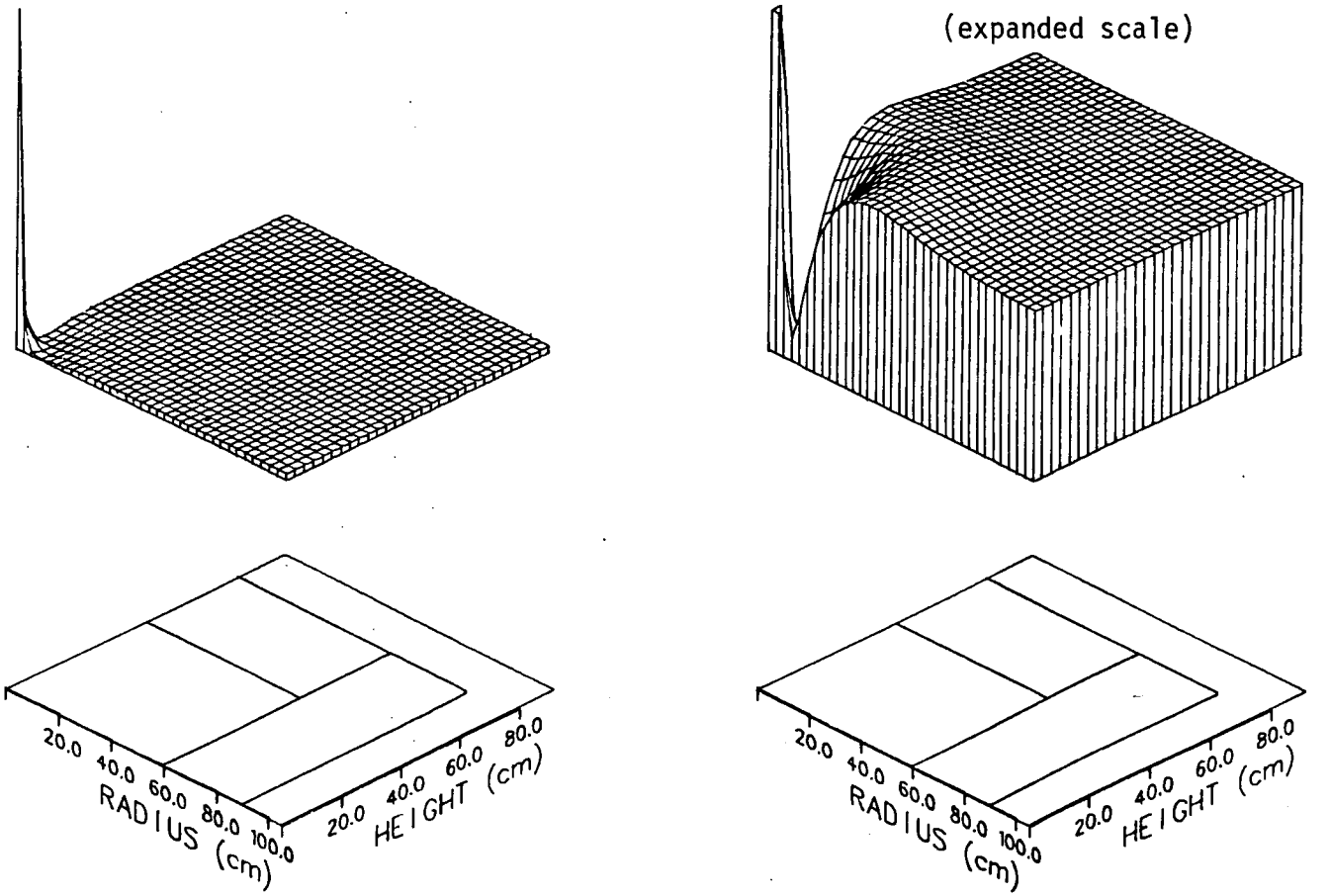

Fig. XIV-1. Plots of the Reaction-Rate Ratio Γ* for Group 1.

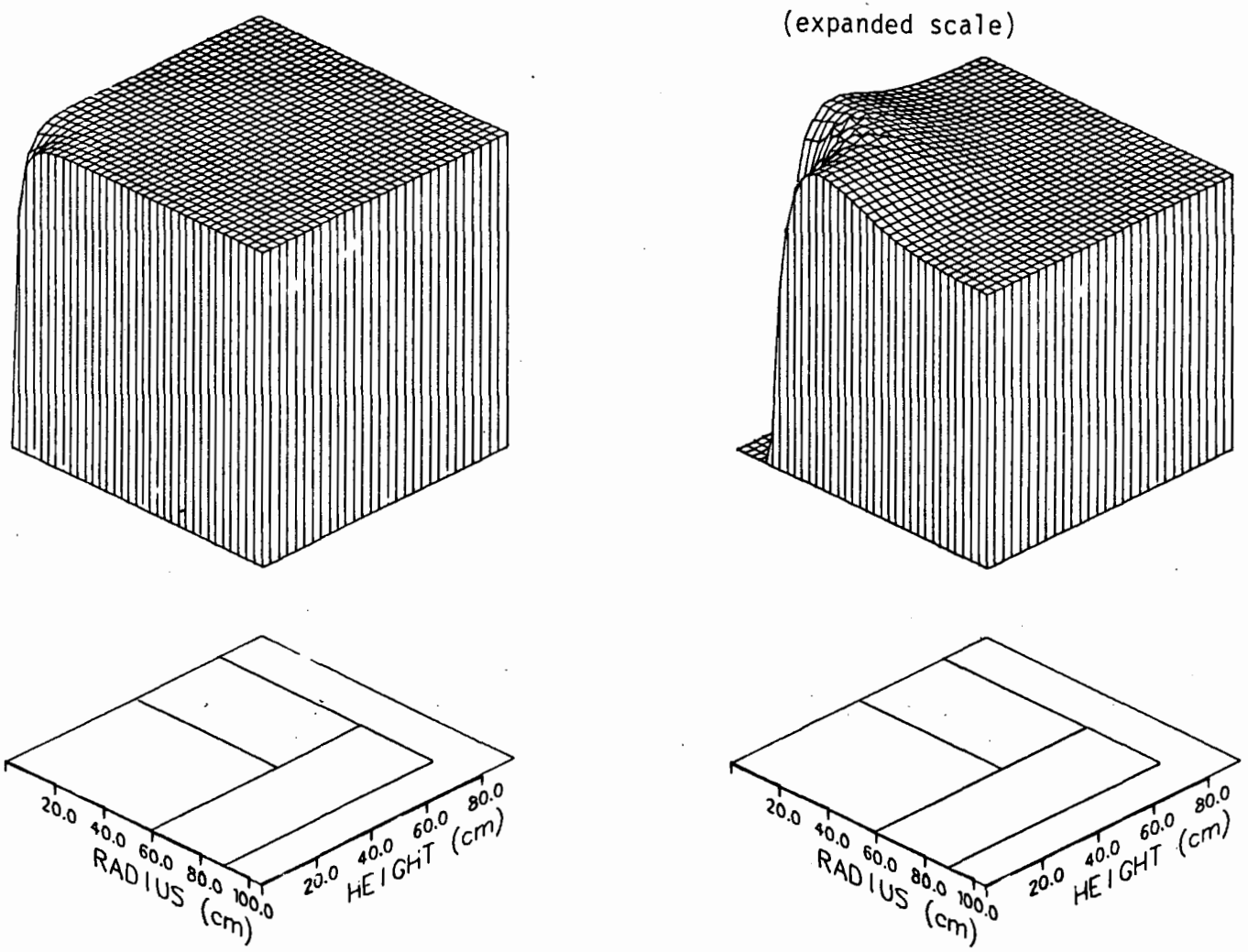

Fig. XIV-2. Plots of the Reaction-Rate Ratio Γ* for Group 2.

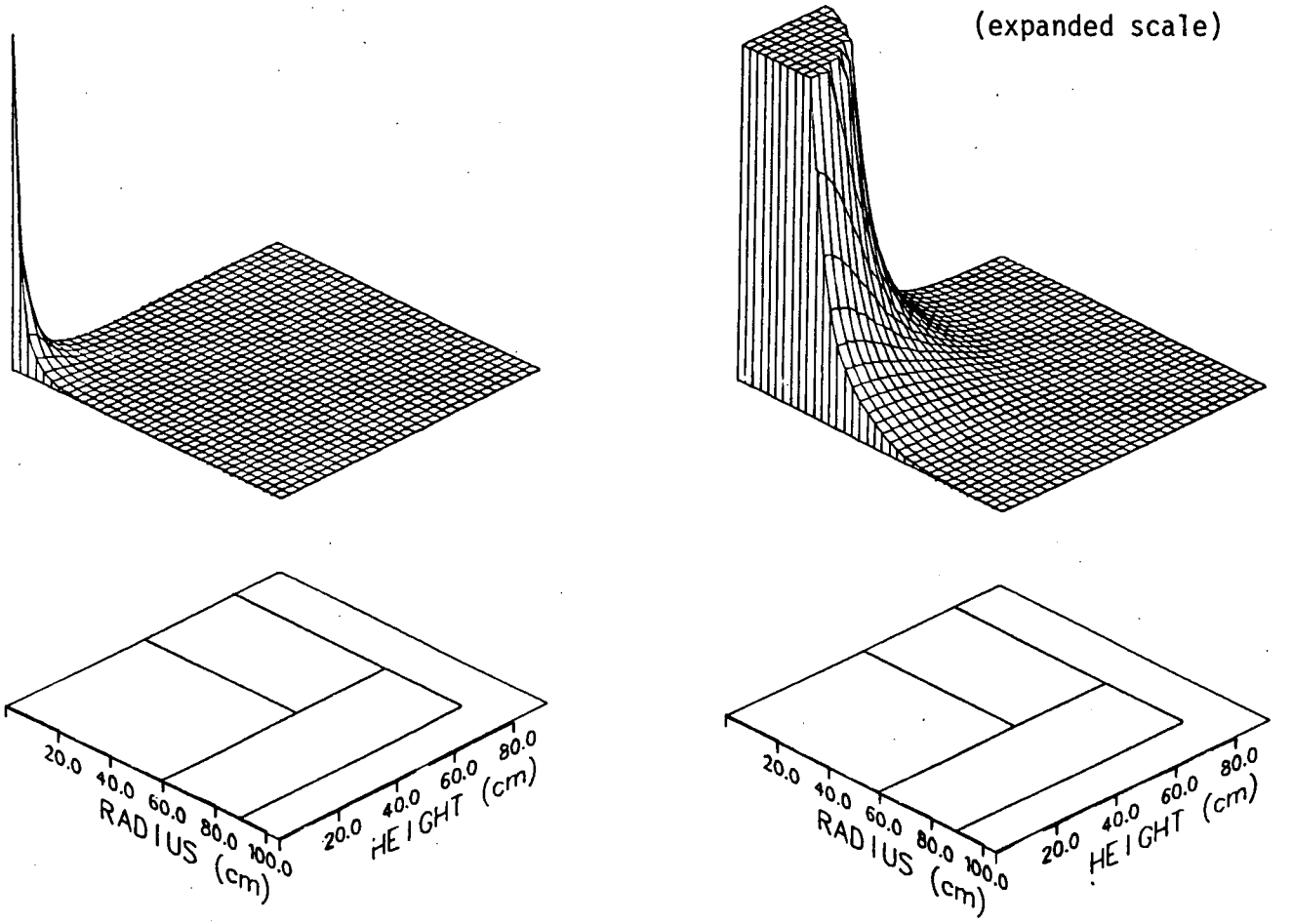

Fig. XIV-3. Plots of the Reaction-Rate Ratio Γ* for Group 3.

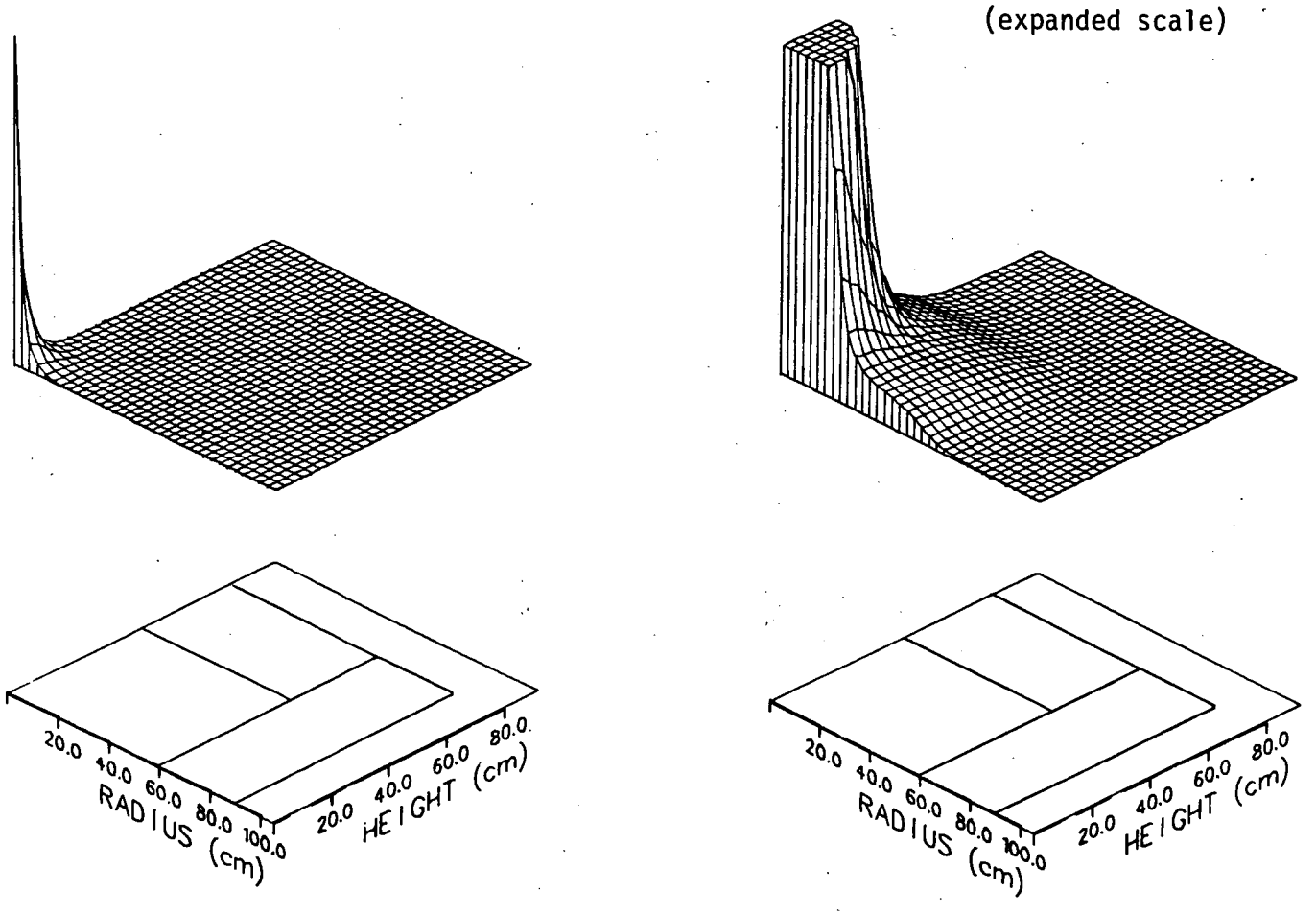

Fig. XIV-4. Plots of the Reaction-Rate Ratio Γ^* for Group 4.

which is dominated by the uncollided. Therefore, a second plot using a scale suitable for viewing fluxes farther away from the source is also shown. These plots are included to indicate the general features of Γ^*. For example, Γ^* for the first group displays a positive-negative-positive sign pattern, while Γ^* for group 2 has a negative-positive sign pattern. Γ^* for groups 3 and 4 are all positive. This sign pattern may be interpreted by recalling that Γ^* is an importance function for neutrons removed or added at any point and that S^* is an importance function for changes in flux. Since S^* is positive for groups 1, 3, and 4 and negative for group 2, it is not surprising that Γ^* is positive for groups 3 and 4. For neutrons introduced in group 2, the flux in group 2 is increased (which lowers the response R) while the fluxes in the other groups are also increased (which increases R). If the group 2 flux effect dominates (which is more likely for neutrons introduced near the center of the reactor), Γ^* for group 2 is negative; if the flux change in the other groups dominate, then Γ^* will be positive. The sign of the flux in group 1 can be interpreted in a similar manner.

VIP and JULIET were used to calculate the effect of the number density perturbations for carbon and ^{239}Pu. The generalized perturbation equation used is

$$\frac{\delta R}{R} \approx -\langle \Gamma^*(\delta A - \lambda \delta B)\phi \rangle \quad . \tag{14-4}$$

In order to check the perturbation theory results, the direct calculation method was also used to obtain values for $\delta R/R$. The calculated values of R for several different perturbed states are shown in Table XIV-2.

Table XIV-2. Direct Calculations of the Reaction-Rate Ratio

Core Number Density Perturbation	R (^{238}U absorption/^{239}Pu fission)
+10% for C	0.18128
-10% for C	0.17843
+10% for ^{239}Pu	0.17908
-10% for ^{239}Pu	0.18072
no perturbation	0.17987

The linear perturbation theory predictions for $\delta R/R$ are compared with direct calculations in Table XIV-3.

Table XIV-3. Changes in Reaction-Rate Ratios Calculated Using Perturbation Theory and Direct Calculations

Core Number Density Perturbation	Direct Calculation	Linear Perturbation Theory	Percent Difference
+10% for C	0.00784	0.00794	1.3%
-10% for C	-0.00801	-0.00794	-0.9%
+10% for ^{239}Pu	-0.00439	-0.00462	5.2%
-10% for ^{239}Pu	0.00473	0.00462	-2.3%

The central difference method described in Chapter IX is a better test of the accuracy of linear perturbation theory results for perturbations outside the linear range. This comparison is shown in Table XIV-4.

Table XIV-4. Changes in Reaction-Rate Ratios Calculated Using Perturbation Theory and Central Difference Direct Calculations

Core Number Density Perturbation	Central Difference Direct Calculation	Linear Perturbation Theory	Percent Difference
10% for C	0.00792	0.00794	0.3%
10% for ^{239}Pu	-0.00456	-0.00462	1.3%

The agreement between the central difference direct calculations and the generalized perturbation theory results are quite good. This indicates that the procedures described in Chapter X for calculating generalized functions are satisfactory for the class of problems considered here. The results for generalized perturbation theory are comparable and perhaps slightly better than the eigenvalue perturbation theory results described in Chapter XIII.

85

CHAPTER XV

DEMONSTRATION GENERALIZED PERTURBATION CALCULATIONS FOR BILINEAR RATIOS

The bilinear ratio chosen for the demonstration calculations described in this chapter is the worth of a small sample of ^{239}Pu in the center of the carbide benchmark. Central reactivity worths are of considerable interest in reactor physics.

There are two indirect effects associated with bilinear ratios; one for changes in the forward flux, and one for changes in the adjoint flux. The generalized sources for the central worth problem are given by

$$S = \frac{(\Delta A - \lambda \Delta B)\phi}{\langle \phi^*(\Delta A - \lambda \Delta B)\phi \rangle} - \frac{\chi f}{\langle f f^* \rangle} \tag{15.1}$$

and

$$S^* = \frac{(\Delta A^* - \lambda \Delta B^*)\phi^*}{\langle \phi^*(\Delta A - \lambda \Delta B)\phi \rangle} - \frac{\nu \Sigma_f f^*}{\langle f f^* \rangle} \quad , \tag{15.2}$$

where ΔA and ΔB refer to the ^{239}Pu sample. The fission neutron production densities f and f* provide a convenient way to calculate the second term in each of Eqs. (15.1) and (15.2). The first term in each of these source equations is located in a small volume and can be represented by a point source. The second term in each of these equations is a volume distributed source which appears at all points where fission occurs. The four-group point sources for the worth problem are shown in Table XV-1.

Table XV-1. The Point Generalized Sources for Central ^{239}Pu Worth

Group	Forward	Adjoint
1	3.1883 E+4	5.2566 E+3
2	1.9657 E+3	4.2565 E+3
3	-4.5172 E+3	4.9663 E+3
4	-1.8212 E+3	1.2073 E+4

The computer program GRTUNCL was used to calculate a first-collision source for DOT IV for each of these sources. The volume distributed source given by the second term in each of the source equations was added to the first-collision source. The generalized functions Γ and Γ^* were calculated using DOT IV. Plots of Γ and Γ^* are shown in Figs. XV-1 through XV-4. Γ has a positive-negative spatial sign pattern for groups 1 and 2 and a negative-positive-negative sign pattern for groups 3 and 4. Γ^* has a positive-negative sign pattern for each of the groups. Large values near the point source are not shown in these figures in order to show more detail in the flux shapes.

The indirect effect due to changes in the forward flux is given by

$$I_{\delta\phi} \approx -\langle \Gamma^*(\delta A - \lambda\delta B)\phi \rangle \quad . \tag{15-3}$$

VIP and TPERT were used to evaluate this equation for a perturbation consisting of a 10% change in the carbon number density. The indirect effect due to changes in the adjoint flux is given by

$$I_{\delta\phi^*} \approx -\langle \phi^*(\delta A - \lambda\delta B)\Gamma \rangle \quad . \tag{15-4}$$

Equation (15-4) was evaluated to obtain $I_{\delta\phi^*}$.

Another way to obtain changes in worth is to calculate the worth of the ^{239}Pu sample using various combinations of perturbed and unperturbed fluxes. The equation for central plutonium worth is

$$W = -\frac{\langle \phi^*(\Delta A - \lambda\Delta B)\phi \rangle}{\langle \phi^* B \phi \rangle} \quad . \tag{15-5}$$

This is the same equation evaluated in Chapter XIII except now the integration in the numerator is limited to the central interval in the DOT IV

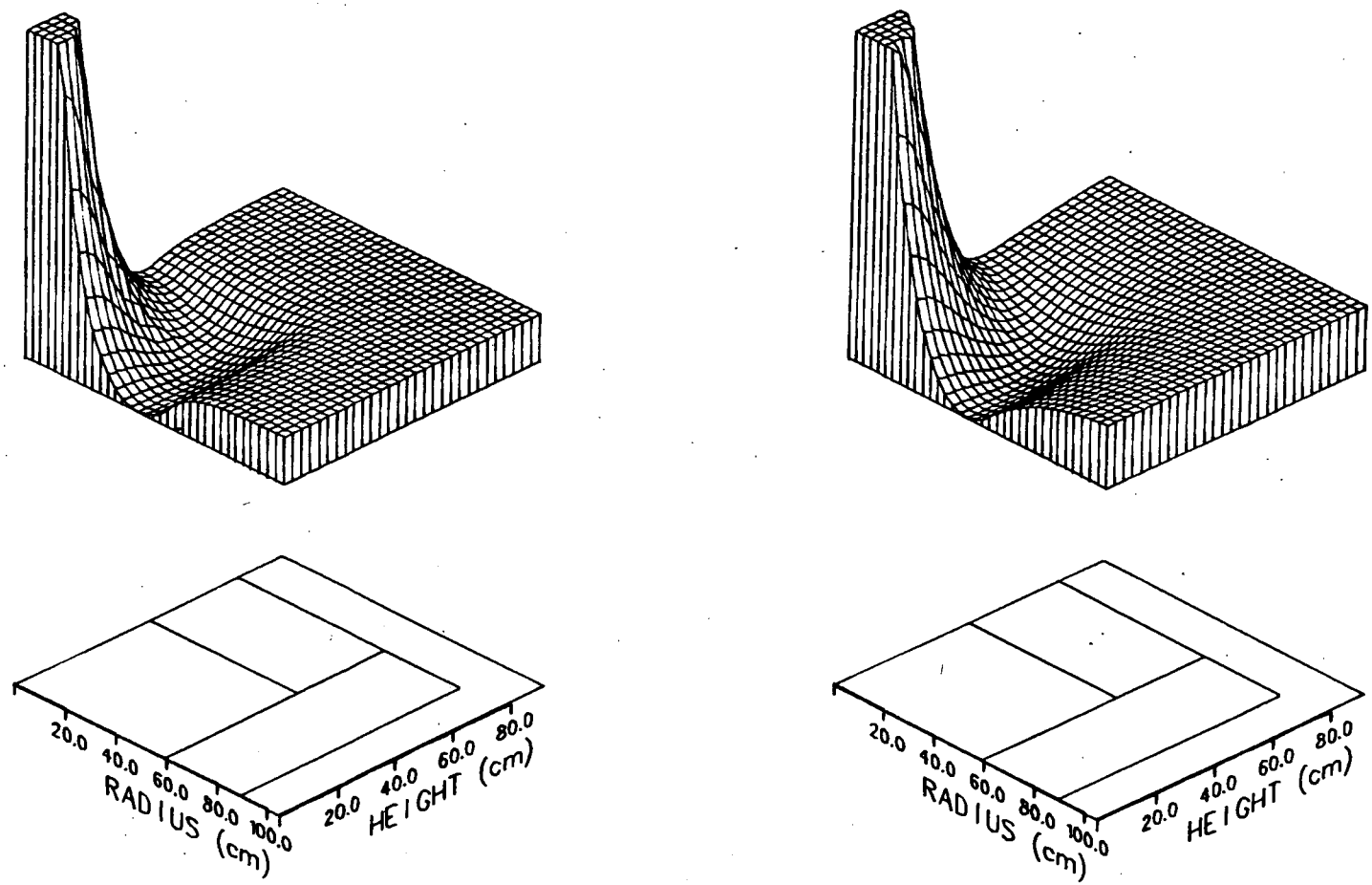

Fig. XV-1. Plots of Γ and Γ* for Worth in Group 1.

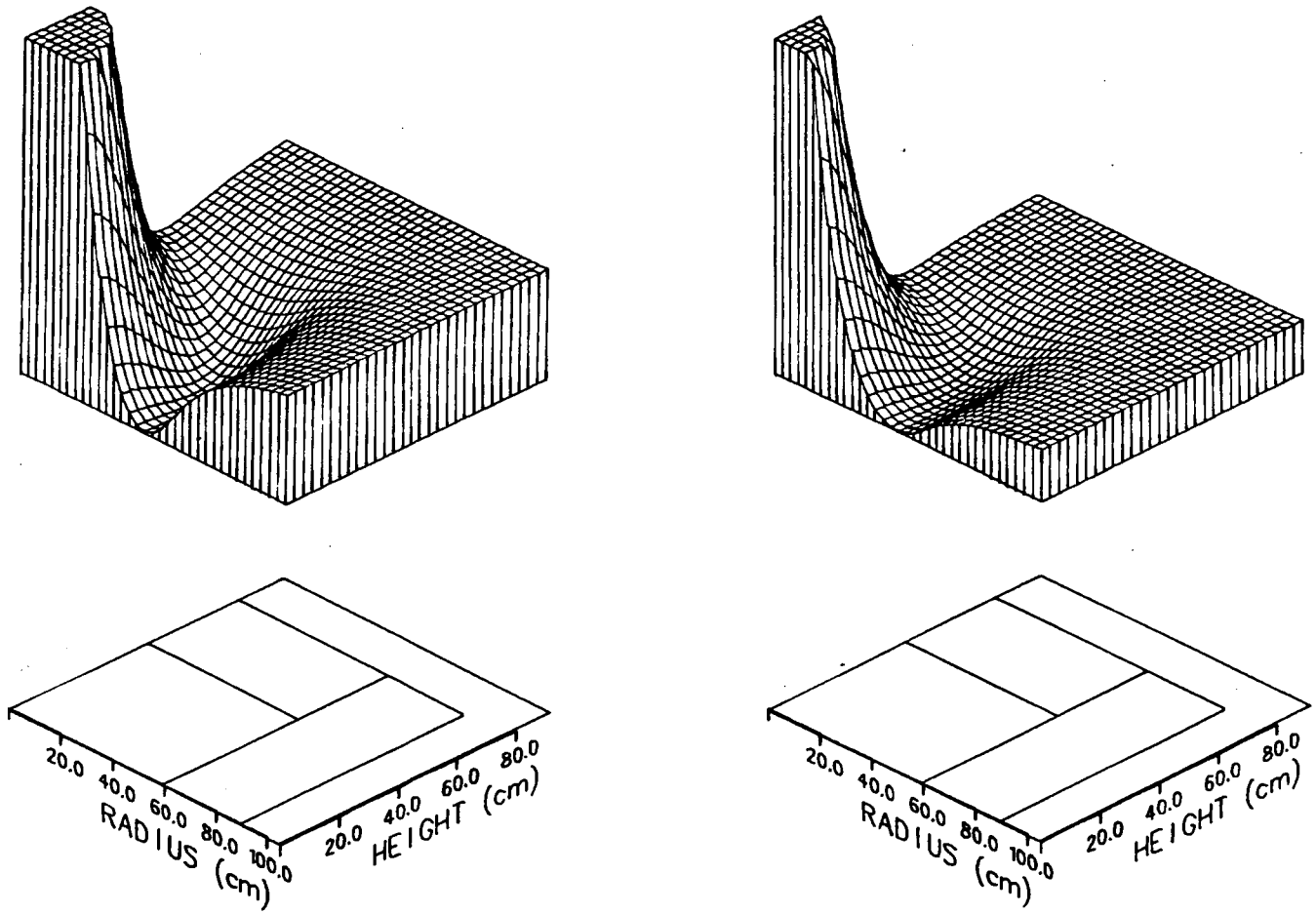

Fig. XV-2. Plots of Γ and Γ* for Worth in Group 2.

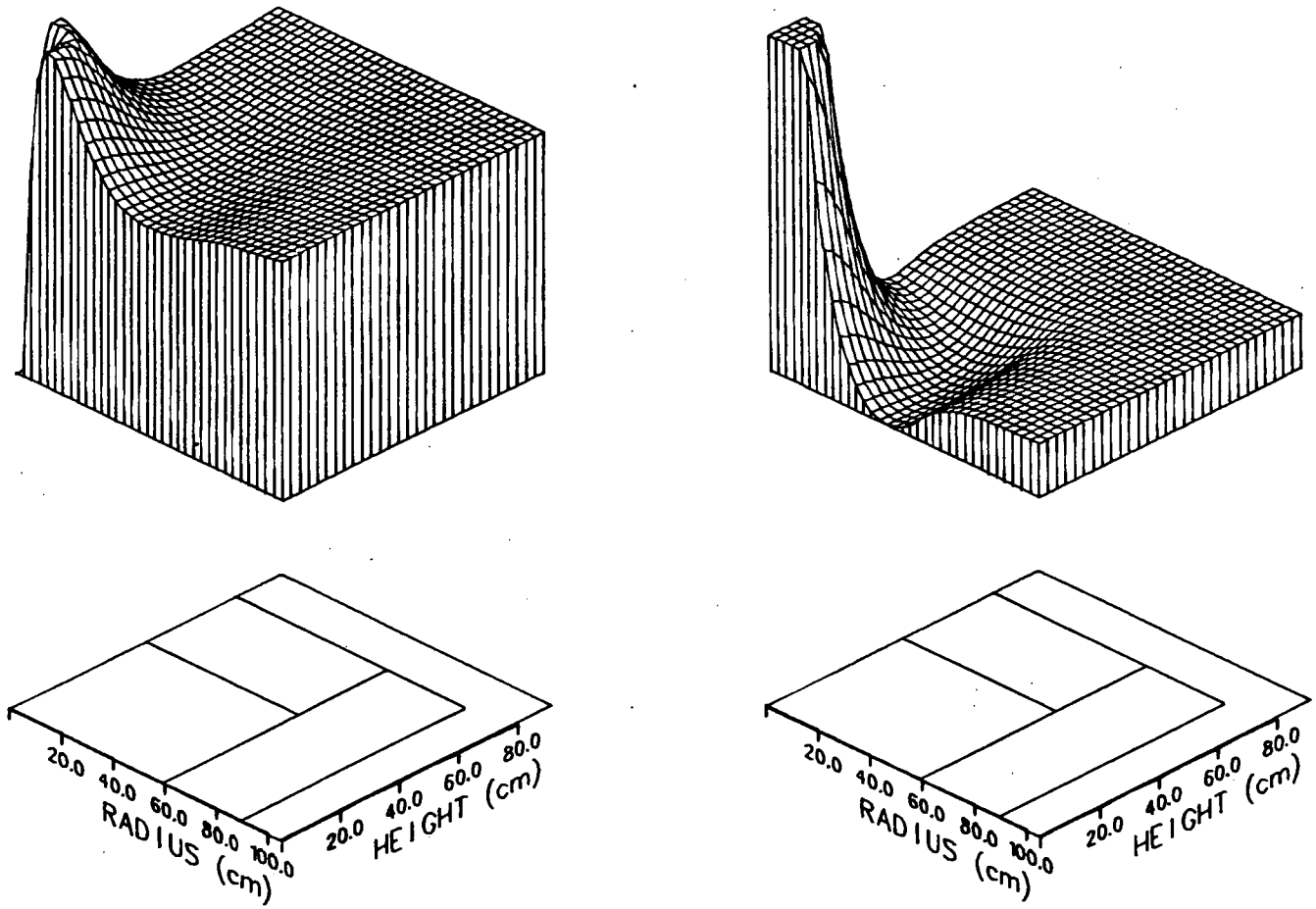

Fig. XV-3. Plots of Γ and Γ* for Worth in Group 3.

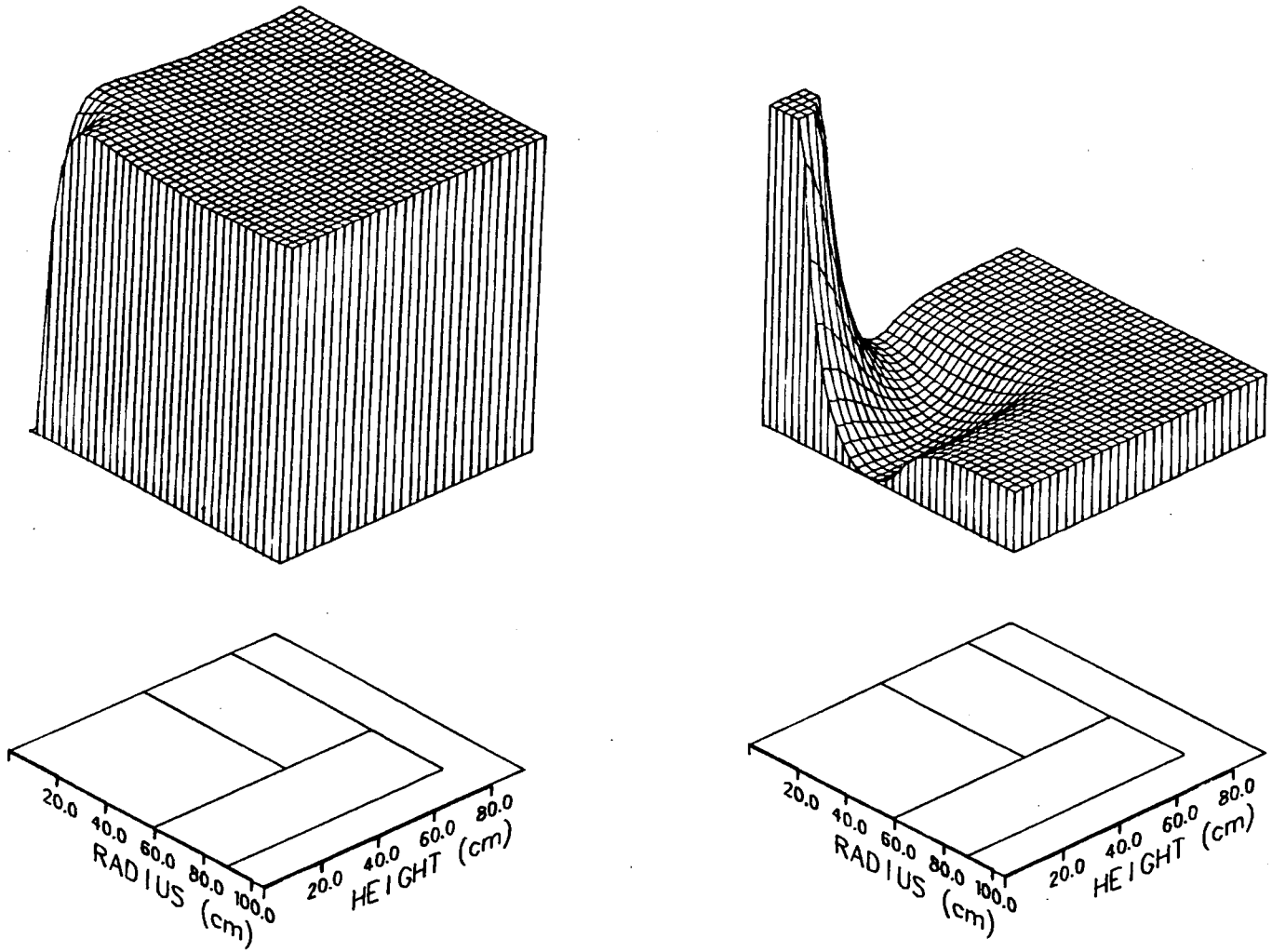

Fig. XV-4. Plots of Γ and Γ* for Worth in Group 4.

space mesh. The worth of a 10% increase in the ^{239}Pu number density in the central interval evaluated using Eq. (15-5) and various combinations of perturbed and unperturbed fluxes are shown in Table XV-2.

Table XV-2. Central Worths for ^{239}Pu

Fluxes for the Worth Calculation	Perturbed State	
	+10% C	-10% C
ϕ,ϕ^*	3.1169 E-5	3.1169 E-5
ϕ,ϕ_p^*	3.1285 E-5	3.1049 E-5
ϕ_p,ϕ^*	3.1354 E-5	3.0992 E-5
ϕ_p,ϕ_p^*	3.1471 E-5	3.0873 E-5

The calculation of worth using the unperturbed forward and perturbed adjoint (ϕ,ϕ_p^*) corresponds to $I_{\delta\phi^*}$, while the worth calculated using ϕ_p and ϕ^* corresponds to $I_{\delta\phi}$. The worth calculated using ϕ_p and ϕ_p^* corresponds to the sum of $I_{\delta\phi}$ and $I_{\delta\phi^*}$.

A comparison of values of $\delta W/W$ calculated using the values in Table XV-2 and generalized perturbation theory results is shown in Table XV-3.

The difference between the central difference direct calculation and the generalized perturbation theory calculation for changes in central ^{239}Pu worth is about 2%. This is considered excellent agreement. These results indicate that the numerical methods described in Chapter X for calculating Γ and Γ^* can be used for engineering calculations.

Table XV-3. A Comparison of Calculated Values for Changes in Worth

Calculation	$I_{\delta\phi}*$	$I_{\delta\phi}$	$\delta W/W$
Direct calculation for -10% C perturbation	-0.00383	-0.00567	-0.00948
Direct calculation for +10% C perturbation	0.00373	0.00595	0.00969
Central difference result using the direct calculations	0.00378	0.00581	0.00959
Generalized Perturbation Theory result for the +10% C perturbation	0.00386	0.00591	0.00976
Percent difference between the central difference and perturbation results	2.1%	1.7%	1.8%

CHAPTER XVI

CALCULATION OF HIGHER EIGENFUNCTIONS

After DOT IV was modified to calculate generalized functions, it was noted that higher eigenfunctions (i.e., eigenfunctions other than the fundamental) are similar to generalized functions and that the same computer program could be used to calculate both. The fact that higher eigenfunctions are positive at some points and negative at others was not a problem because of the partitioning of positive and negative sources described in Chapter X.

In order to explain how higher eigenfunctions may be calculated, the method commonly used to calculate the fundamental mode eigenvalue and eigenfunction is first described. The outer iteration procedure used in DOT IV can be written as

$$A\phi^n = \frac{\chi}{k^{n-1}} f^{n-1} \quad , \tag{16.1}$$

where k^{n-1} is the fundamental mode k eigenvalue and f^{n-1} is the fundamental mode fission neutron production. The superscripts refer to the outer iteration number. The source given by the right-hand side of Eq. (16.1) is normalized such that

$$\left\langle \frac{\chi}{k^{n-1}} f^{n-1} \right\rangle = 1 \quad . \tag{16.2}$$

The outer iteration represented by Eq. (16.1) is performed to obtain ϕ^n which is used to calculate f^n using the definition given in Chapter VII. The next estimate of the eigenvalue is calculated using

$$k^n = \langle \chi f^n \rangle \quad . \tag{16.3}$$

This outer iteration procedure converges as the higher modes die away while the normalization of the source prevents the fundamental mode from either dying away or growing very large. However, if no fundamental mode is present in the flux guess, the normalization will preserve the largest k eigenfunction present while the other eigenfunctions will die away. It was found that the version of DOT IV used to calculate generalized functions could also calculate the eigenfunction k_1 since the fundamental mode removal (sweeping) discussed in Chapter X removed the fundamental mode. The only restriction was that the multiplier applied to the initial flux guess to obtain the normalization given by Eq. (16.2) be positive, since a negative multiplier would make the positive fluxes negative and the negative fluxes positive and thus transform the all-positive problem into an all-negative problem. This minor difficulty is easily overcome. Additional modes may also be swept from the initial fission guess using the sweeping equations

$$g = g' - \frac{\langle f_n^* g' \rangle}{\langle f_n^* f_n \rangle} f_n \tag{16.4}$$

and

$$g^* = g^{*\prime} - \frac{\langle g^{*\prime} f_n \rangle}{\langle f_n^* f_n \rangle} f_n^* \quad . \tag{16.5}$$

Here g' and $g^{*\prime}$ are forward and adjoint fission guesses containing the nth mode, and g and g* contain no nth mode. These sweeping equations are similar to the sweeping equations discussed in Chapter VII for the fundamental mode.

DOT IV was modified in an ad hoc manner to sweep several modes after each outer iteration. The first few modes for the Carbide Benchmark were

then calculated. Diffusion theory was used for these calculations as an economy measure. The functions f_n and f_n^* must be calculated for each mode before proceeding to the next in order to have the functions required to perform the sweeping. The eigenvalues for the fundamental mode and four higher modes are given in Table XVI-1. For each eigenvalue, the two

Table XVI-1. The First Few k Eigenvalues

n	k_n
0	0.98
1	0.56
2	0.52
3	0.36
4	0.31

numerical values from the forward and adjoint calculations agreed well although not exactly (probably because of roundoff and less than perfect convergence). Plots of the functions f_n and f_n^* are shown in Figs. XVI-1 through XVI-5. Comparing these plots indicates that f_n and f_n^* are similar but not identical. f_n is discontinuous between the core and blanket (because the macroscopic fission cross section is discontinuous), while f_n^* is continuous. However f_n and f_n^* have the same sign as a function of position. This implies that

$$\langle f_n f_n^* \rangle \neq 0 \quad . \tag{16.6}$$

The pair of eigenfunctions corresponding to $k_1 = 0.56$ and $k_2 = 0.52$ are similar in that each has one positive stripe and one negative stripe separated by a roughly constant radius line for k_1 and a roughly

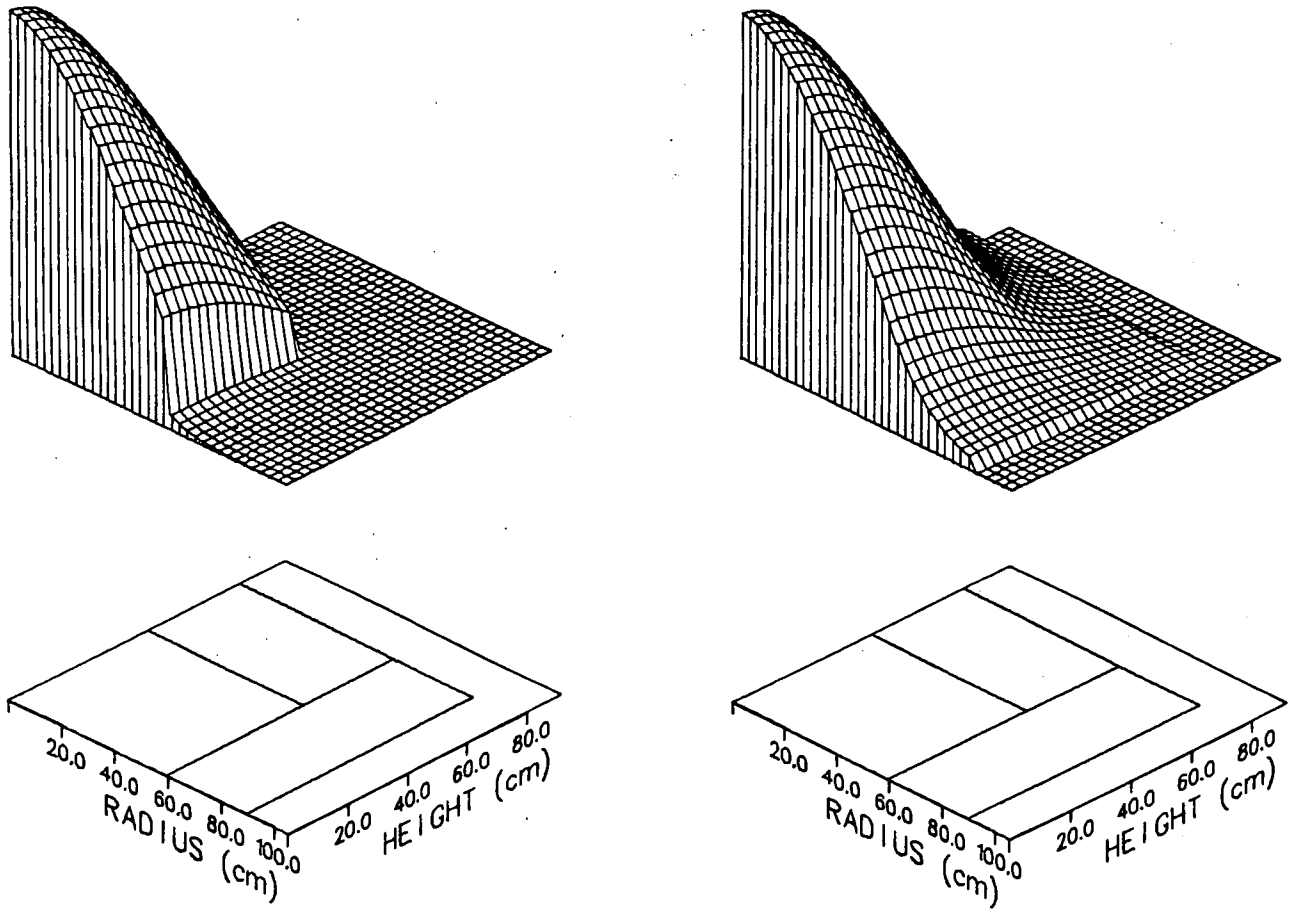

Fig. XVI-1. Plots of f and f*.

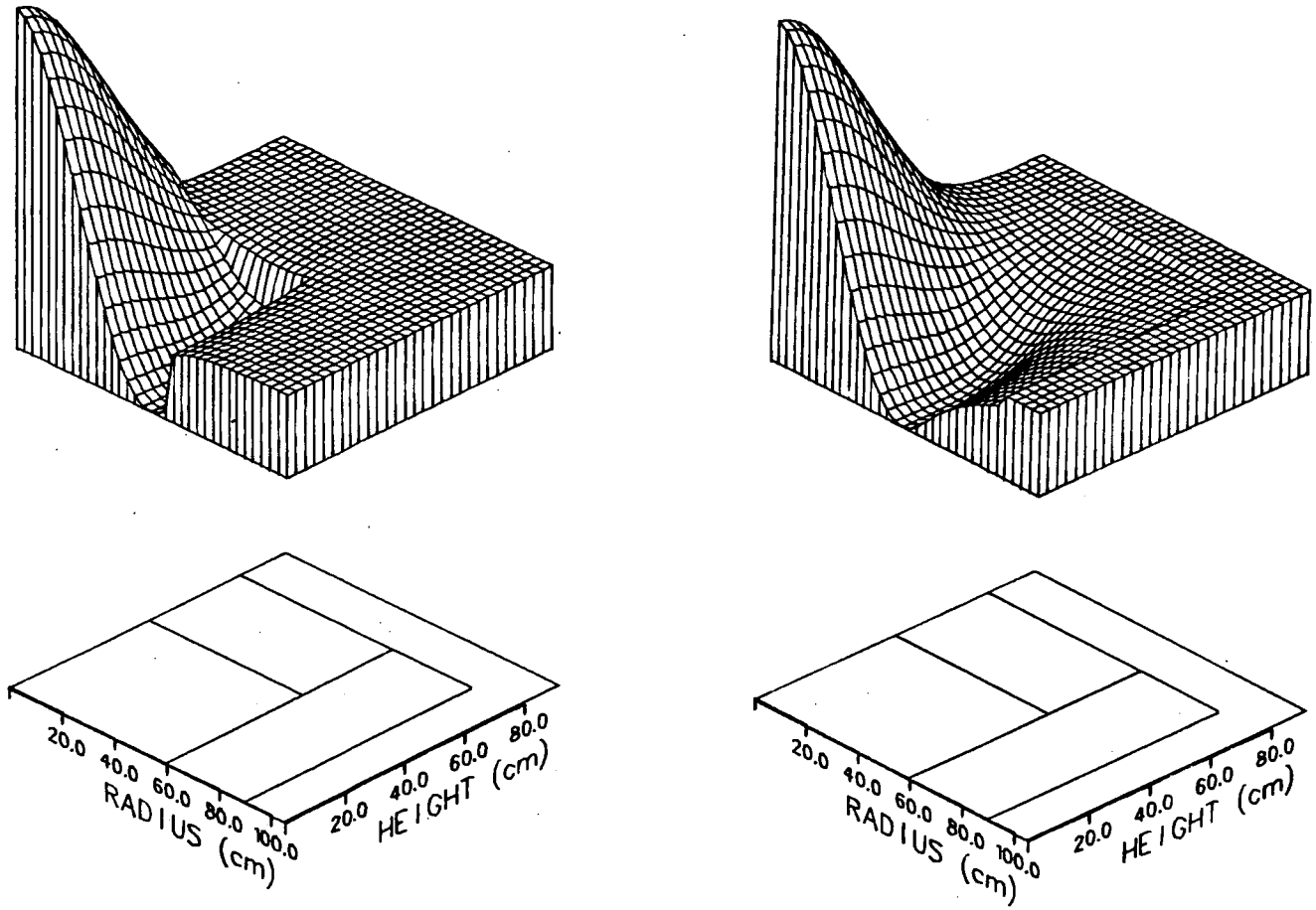

Fig. XVI-2. Plots of f_1 and f_1*.

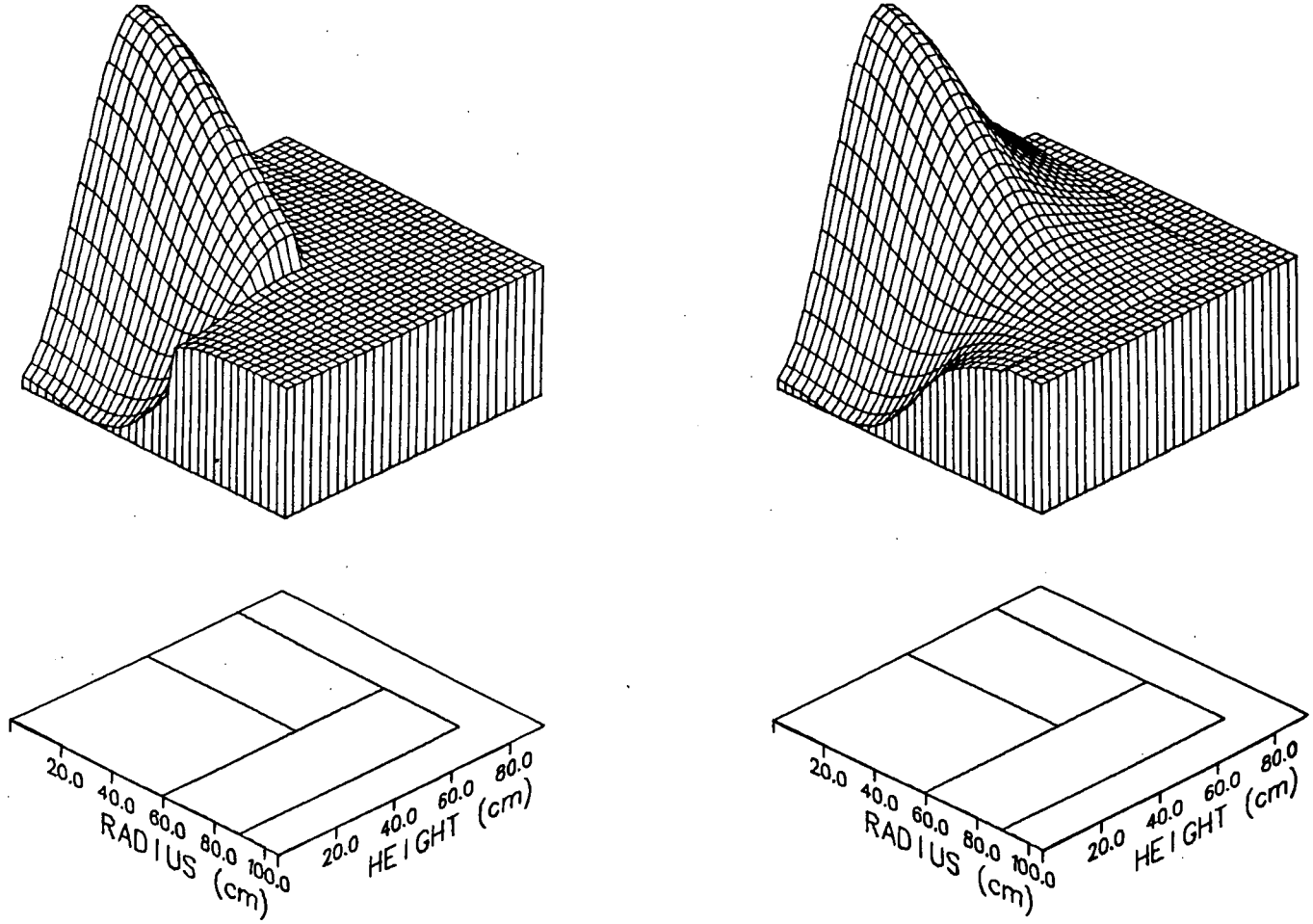

Fig. XVI-3. Plots of f_2 and f_2*.

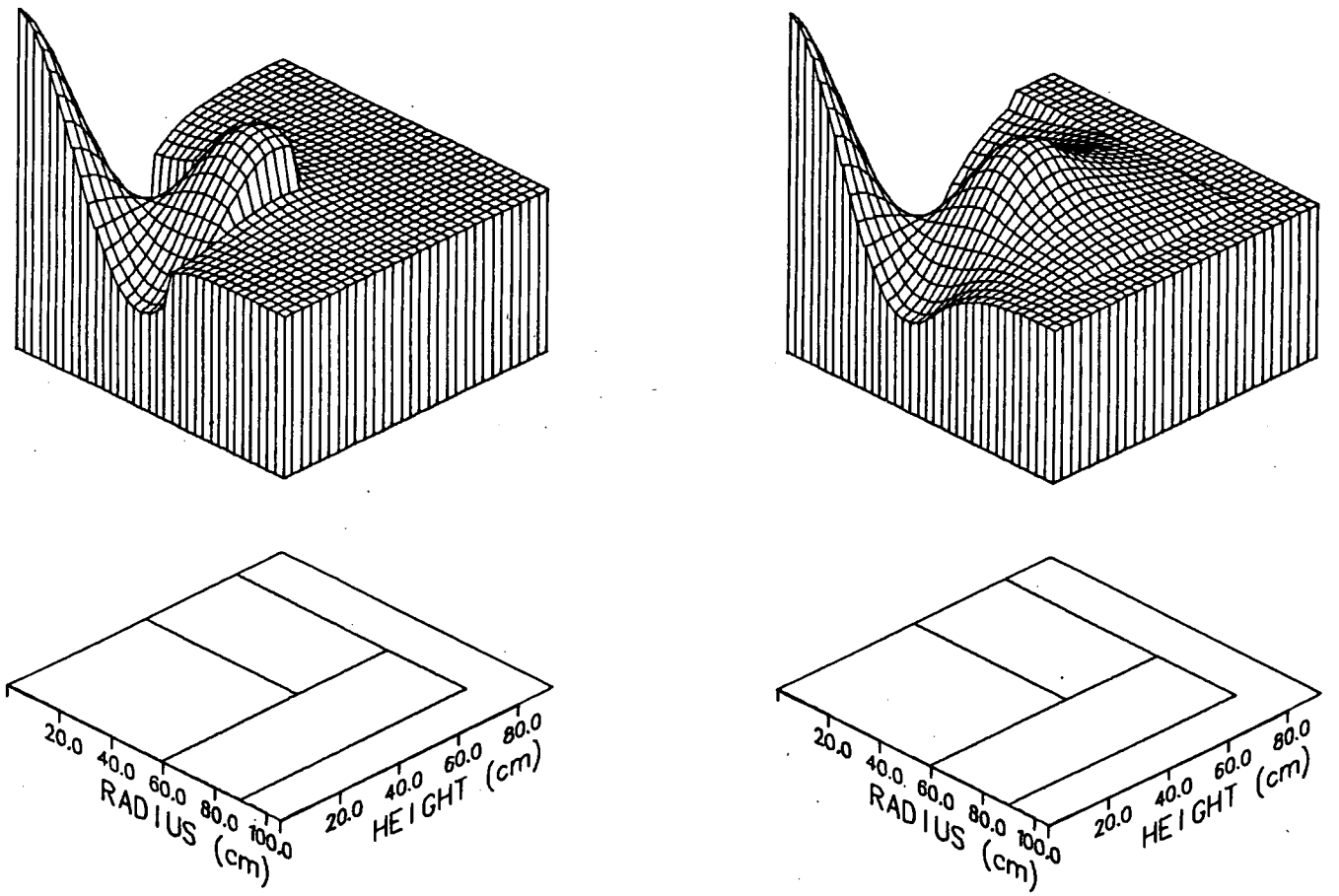

Fig. XVI-4. Plots of f_3 and f_3*.

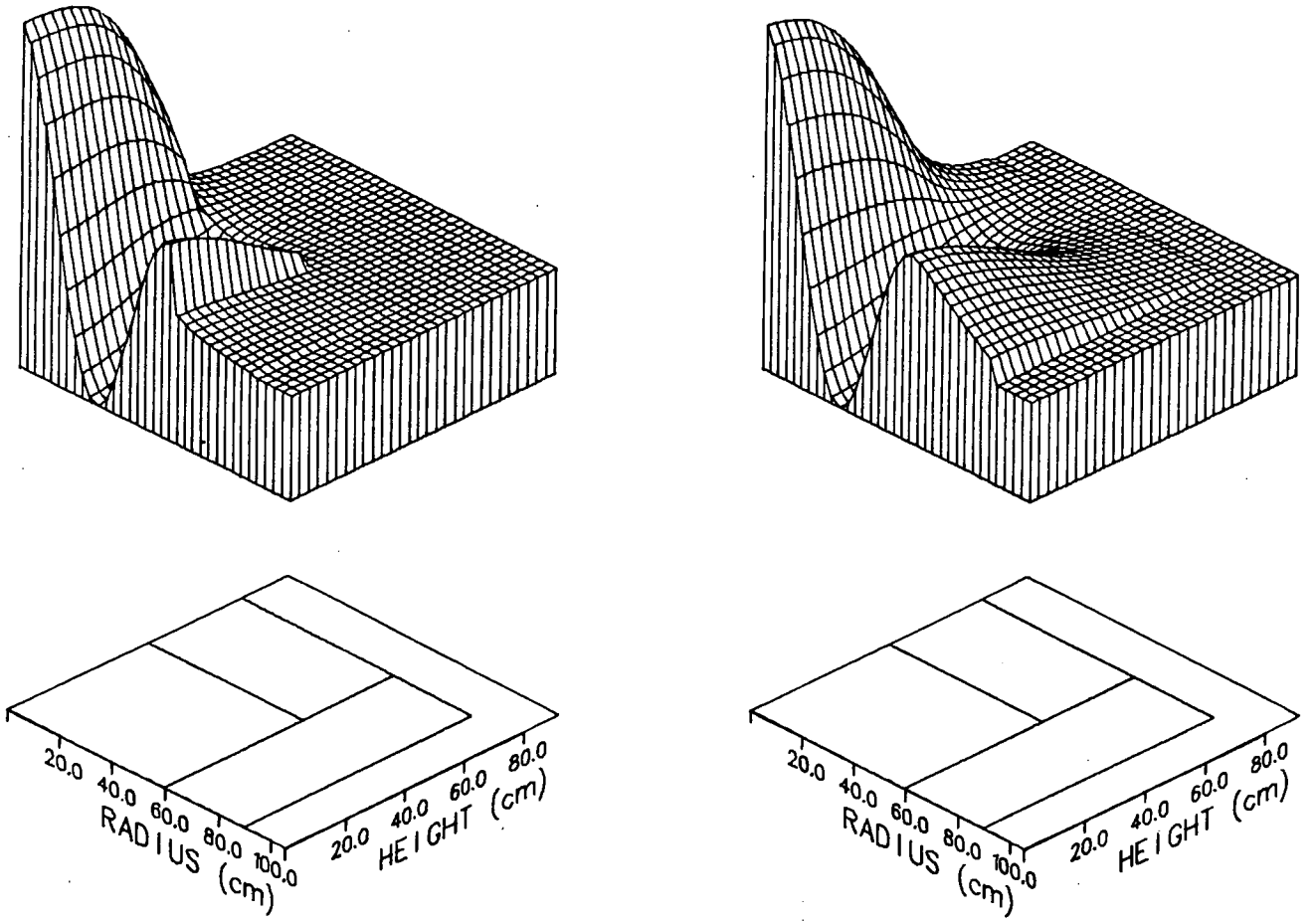

Fig. XVI-5. Plots of f_4 and f_4*.

constant height line for k_2. Note that the normalization of k_2 was changed (from 1 to −1) for plotting purposes. The eigenfunctions corresponding to $k_3 = 0.36$ and $k_4 = 0.31$ have a more complicated positive-negative-positive spatial sign pattern. f_4 and f_4* have vertical stripes as do f_1 and f_1*.

The calculation of higher eigenfunctions is an interesting corollary to the calculation of generalized functions. Higher eigenfunctions are often discussed in nuclear engineering applications even though little is known about them.

CHAPTER XVII

OUTER ITERATION CONVERGENCE FOR GENERALIZED FUNCTIONS

The rate of convergence of the outer iteration procedure used to calculate generalized functions can be predicted if the second eigenfunction λ_1 is known. This can be illustrated using the Neumann series for Γ

$$\Gamma = \sum_{n=0}^{\infty} \psi_n \quad , \tag{17-1}$$

where

$$A\,\psi_0 = S \tag{17-2}$$

and

$$A\,\psi_n = \lambda B \psi_{n-1} \quad . \tag{17-3}$$

Using the eigenfunction expansions discussed in Chapter VII, it can be shown that

$$\psi_n = \sum_m \left(\frac{\lambda}{\lambda_m}\right)^n \frac{\langle \phi_m^* B \psi_0 \rangle}{\langle \phi_m^* B \phi_m \rangle} \phi_m \quad (n \neq 0) \quad . \tag{17-4}$$

The summation over eigenfunctions excludes the fundamental mode. The eigenfunction expansion for Γ can be written as

$$\Gamma = \psi_0 + \sum_m a_m \phi_m \quad . \tag{17-5}$$

Using Eqs. (17-1) and (17-4), the coefficients a_m are found to be

$$a_m = \frac{\langle \phi_m^* B \psi_0 \rangle}{\langle \phi_m^* B \psi_m \rangle} \sum_{n=1}^{\infty} \left(\frac{\lambda}{\lambda_m}\right)^n \quad . \tag{17-6}$$

The convergence of the Neumann series is determined by the rate of convergence of the series in Eq. (17-6). After many terms in the Neumann series, the eigenfunction ϕ_1 will dominate and each successive term in the Neumann series will decrease by the factor λ/λ_1.

The partial sum for N terms of the series in Eq. (17-6) is

$$S_N = \sum_{n=1}^{N} \left(\frac{\lambda}{\lambda_m}\right)^n = \frac{\frac{\lambda}{\lambda_m}\left[1 - \left(\frac{\lambda}{\lambda_m}\right)^N\right]}{1 - \frac{\lambda}{\lambda_m}} \quad . \tag{17-7}$$

The truncation error R_N is given by

$$R_N = S_\infty - S_N = \frac{\left(\frac{\lambda}{\lambda_m}\right)^{N+1}}{1 - \frac{\lambda}{\lambda_m}} \quad . \tag{17-8}$$

The rate of convergence for each a_m may be characterized by

$$\gamma_m = \frac{R_{N+1}}{R_N} = \frac{\lambda}{\lambda_m} \quad . \tag{17-9}$$

Thus the truncation error for any a_m decreases by the factor λ/λ_m for each outer iteration or each term in the Neumann series.

Acceleration of outer iterations can be accomplished in a number of ways. A particularly simple method is to use a constant overrelaxation factor. The overrelaxation method for accelerating a fission density f^n is

$$(f^{n+1})_{acc} = f^{n+1} + \alpha\,(f^{n+1} - f^n) \quad , \tag{17-10}$$

where the superscripts indicate the outer iteration number and α is the acceleration constant.

The rate of convergence for each a_m when acceleration is used is characterized by

$$(\gamma_m)_{acc} = \frac{R_{N+1} + \alpha(R_{N+1} - R_N)}{R_N} = \gamma_m - \alpha(1 - \gamma_m) \quad . \tag{17-11}$$

Equation (17-11) indicates that $(\gamma_m)_{acc}$ can be decreased by using a non-zero α. In fact, if only one mode is present, the exact results can be

obtained after one accelerated iteration provided the proper α is chosen. For some values of α, $(\gamma_m)_{acc}$ may be negative. A negative value indicates that the acceleration has caused the accelerated value to overshoot the converged value. When many modes are present, a criterion for choosing α is to minimize the magnitude of $(\gamma_m)_{acc}$ over all m. If γ_L is the largest γ for a system and γ_S is the smallest, α should be chosen such that

$$(\gamma_L)_{acc} = -(\gamma_S)_{acc} \quad . \tag{17-12}$$

In this case, the largest mode undershoots by the same fractional amount as the smallest mode overshoots. Using Eq. (17-11), Eq. (17-12) becomes

$$\gamma_L - \alpha(1 - \gamma_L) = -[\gamma_S - \alpha(1 - \gamma_S)] \quad . \tag{17-13}$$

The "optimum" value for α is

$$\alpha = \frac{\gamma_L + \gamma_S}{2 - (\gamma_L + \gamma_S)} \quad . \tag{17-14}$$

If γ_S is much smaller than γ_L, then the optimum value for α is

$$\alpha = \frac{\gamma_L}{2 - \gamma_L} \quad . \tag{17-15}$$

The first few eigenfunctions for the Carbide Benchmark sample problem were determined in Chapter XVI. For this problem

$$\gamma_L = \frac{\lambda}{\lambda_1} = \frac{k_1}{k} \approx \frac{0.56}{0.98} \approx 0.57 \quad , \tag{17-16}$$

and

$$\alpha \approx \frac{0.57}{2 - 0.57} \approx 0.40 \quad . \tag{17-17}$$

These results indicate that errors for the sample problem should decrease by a factor of 0.57 per outer for an unaccelerated calculation and by a factor of 0.4 per outer for an accelerated calculation. Therefore, ten outer iterations should reduce the error by factors of 0.0035 and 0.0001, respectively, for the unaccelerated and accelerated cases. Table XVII-1 shows the convergence of the calculation for Γ (see Chapter XV) as a function of the outer iteration. The values of Γ shown are for a point in phase space corresponding to the first group and the space mesh at radial interval number 20 and axial interval number 15 (the upper right-hand interval in the core as shown in Fig. XII-1 on page 62). The calculation for Γ was performed using a flux guess obtained using diffusion theory. The accelerated case (using $\alpha = 0.4$) converges after about eight outers, while the convergence of the unaccelerated case is slower. Only four outers were performed for the unaccelerated case as an economy measure. The convergence of the accelerated case is quite acceptable.

Table XVII-1. Convergence of Γ with Outer Iteration Number

Outer Iteration Number	Value of Γ at a point[a]	
	Accelerated	Unaccelerated
1	−0.626	−0.625
2	−0.634	−0.629
3	−0.643	−0.631
4	−0.650	−0.634
5	−0.651	*b*
6	−0.652	*b*
7	−0.653	*b*
8	−0.654	*b*
9	−0.654	*b*
10	−0.654	*b*

[a]The point is for group 1 and at the top and outside of the core.

[b]Not calculated.

CHAPTER XVIII

SUMMARY AND CONCLUSIONS

Perturbation theory equations have been derived for four cases:

(1) source problems,

(2) eigenvalue problems,

(3) linear ratios in critical systems, and

(4) bilinear ratios in critical systems.

The difference flux formulation was used for each case. A possible advantage of the difference flux method when compared with variational methods is that the terms neglected are easily identified. The versatility of the difference flux method was demonstrated by deriving a perturbation equation for linear ratios in which second order terms were retained. It was shown that the generalized functions Γ and Γ^* contain no fundamental mode component. It was also shown that adding a fundamental mode component to Γ or Γ^* corresponds to a criticality reset.

The computer program DOT IV was modified to calculate generalized functions. The generalized sources were partitioned into positive and negative parts in order to avoid the problem discrete ordinates computer programs have with negative fluxes. A sweeping procedure was used to remove fundamental mode from the generalized functions. Overrelaxation of the fission source was used to accelerate the outer iteration procedure.

The Carbide Benchmark critical experiment was chosen as the model to be used for demonstration problems. The accuracy of the numerical methods developed was demonstrated by calculating the changes in the eigenvalue,

a central reaction-rate ratio, and a central worth. The perturbation theory results were verified by comparing with direct calculations. The calculated changes obtained using these two methods agreed to within about 2% which is very good for this type of calculation.

Several higher λ eigenfunctions and eigenvalues were calculated using many of the same techniques developed to calculate generalized functions. This subject was only briefly explored. Further work could possibly result in the development of practical applications involving eigenfunction expansions.

The generalized perturbation theory calculational methods can be used in nuclear analysis applications which require a two-dimensional geometry and transport theory. Recent LMFBR core designs are highly heterogeneous with internal blankets placed inside the core in order to increase the breeding ratio. The methods developed in this work could be applied to complicated configurations of this type.

LIST OF REFERENCES

1. S. Glasstone and M. C. Edlund, The Elements of Nuclear Reactor Theory, van Nostrand, Princeton, N.J., 1952.

2. L. N. Usachev, "Perturbation Theory for the Breeding Ratio and for Other Number Ratios Pertaining to Various Reactor Processes," J. Nucl. Energy, Parts A/B, 18: 571 (1964).

3. A. Gandini, "A Generalized Perturbation Method for Bilinear Functionals of the Real and Adjoint Neutron Fluxes," J. Nucl. Energy 21: 755 (1967).

4. W. M. Stacey, Jr., "Variational Estimates and Generalized Perturbation Theory for the Ratios of Linear and Bilinear Functionals," J. Math. Phys. 13(8): 1119 (1972).

5. E. M. Oblow, "Reactor Cross-Section Sensitivity Studies Using Transport Theory," ORNL/TM-4437 (April 1974).

6. W. W. Engle, Jr., "A User's Manual for ANISN, A One-Dimensional Discrete Ordinates Transport Code with Anisotropic Scattering," K-1693, Computing Technology Center (1967).

7. W. A. Rhoades, D. B. Simpson, R. L. Childs, and W. W. Engle, Jr., "The DOT IV Two-Dimensional Discrete-Ordinates Transport Code with Space-Dependent Mesh and Quadrature," Oak Ridge National Laboratory, ORNL/TM-6529 (January 1979).

8. G. I. Bell and S. Glasstone, Nuclear Reactor Theory, van Nostrand, Princeton, N.J., 1970.

9. A. F. Henry, Nuclear-Reactor Analysis, The MIT Press, Cambridge, Mass., 1975.

10. F. R. Mynatt, F. J. Muckenthaler, and P. N. Stevens, "Development of Two-Dimensional Discrete Ordinates Transport Theory for Radiation Shielding," CTC/INF-952, Computing Technology Center (August 1969).

11. R. W. Brandon, J. C. Robinson, and C. W. Craven, Jr., "A Variational Approach for the Determination of Neutron Flux Spectra from Detector Activation," Nuc. Sci. Eng. 39(2): 151–163 (1970).

12. T. J. Hoffman, J. C. Robinson, and P. N. Stevens, "The Adjoint Difference Method and Its Application to Deep-Penetration Radiation Transport," Nuc. Sci. Eng. 48(2): 179–188 (1972).

13. Private communication from R. A. Lillie, Oak Ridge National Laboratory, to R. L. Childs, 1977.

14. K. D. Lathrop, "Discrete-Ordinates Methods for the Numerical Solution of the Transport Equation," Reactor Technology 15(2) (1972).

15. R. L. Childs, D. E. Bartine, and W. W. Engle, Jr., "Perturbation Theory and Sensitivity Analysis for Two-Dimensional Shielding Calculations," Trans. of Am. Nucl. Soc. 20: 543 (1975).

16. D. E. Bartine, F. R. Mynatt, and E. M. Oblow, "SWANLAKE, A Computer Code Utilizing ANISN Radiation Transport Calculations for Cross Section Sensitivity Analysis," ORNL/TM-3809 (May 1973).

17. J. L. Lucius, E. M. Oblow, and G. W. Cunningham, III, "A User's Guide for the JULIET Module of the FORSS Sensitivity and Uncertainty Analysis Code System," ORNL/TM-6594 (February 1979).

18. E. T. Tomlinson and R. A. Lillie, "User's Guide and Description of the Perturbation Code Modules DGRAD and TPERT," ORNL/CSD/TM-71 (1978).

19. R. B. Pond, D. M. Smith, and D. C. Wade, "The Advanced Fuels Program Carbide Benchmark Critical Assembly," ZPR-TM-275 (March 1977).

20. E. Kujawski and H. S. Bailey, "Benchmark Analysis of Liquid-Metal Fast Breeder Reactor Nuclear Design Methods," Nuc. Sci. Engr. 64: 90–94 (1977).

21. D. R. Vondy et al., "VENTURE – A Code Block for Solving Multigroup Neutronics Problems Applying the Finite-Difference Diffusion-Theory Approximation to Neutron Transport, Version II," ORNL-5062/R1 (November 1977).

22. R. L. Childs and J. V. Pace, III, "Input Instructions for the First Collision Source Program, GRTUNCL," unpublished notes (1977).

Internal Distribution

1-2. L. S. Abbott
3. J. Barhen
4. J. Barish
5. J. M. Barnes
6. D. E. Bartine
7. B. L. Broadhead
8. T. J. Burns
9. D. G. Cacuci
10. H. P. Carter/A. A. Brooks/ CSD X-10 Library
11-15. R. L. Childs
16. G. de Saussure
17. H. L. Dodds
18. W. W. Engle
19. G. F. Flanagan
20. T. B. Fowler
21. D. T. Ingersoll
22. R. A. Lillie
23. J. L. Lucius
24. F. C. Maienschein
25. P. J. Maudlin
26. J. H. Marable
27. J. W. McAdoo
28. B. L. McGill
29. E. M. Oblow
30. J. V. Pace
31. C. V. Parks
32. R. B. Perez
33. L. M. Petrie
34. J. A. Renier
35. W. A. Rhoades
36. R. W. Roussin
37. J. C. Ryman
38. D. L. Selby
39. C. O. Slater
40. Julius Smith
41. J. T. Thomas
42. E. T. Tomlinson
43. D. F. Vondy
44. M. W. Waddell
45. J. J. Wagschal
46. C. F. Weber
47. D. R. Weisbin
48-52. R. M. Westfall
53. J. R. White
54-58. G. E. Whitesides
59. L. R. Williams
60. M. L. Williams
61. B. A. Worley
62. RSIC
63. Central Research Library
64. Y-12 Document Ref. Section
65-67. Laboratory Records Dept.
68. Laboratory Records-RC
69. ORNL Patent Section

External Distribution

70. P. F. Pasqua, School of Nuclear Engineering, University of Tennessee, Knoxville, Tennessee 37919
71. P. N. Stevens, School of Nuclear Engineering, University of Tennessee, Knoxville, Tennessee 37919
72. J. C. Robinson, Technology for Energy Corporation, 10770 Dutchtown Road, Knoxville, Tennessee 37922
73. J. N. Rogers, Division 8324, Sandia Laboratories, Livermore, Califonia 94550
74. Chief, Mathematics and Geoscience Branch, Department of Energy, Washington, DC 20545
75. Office of Assistant Manager for Energy Research and Development, Department of Energy, ORO, Oak Ridge, Tennessee 37830
76-102. Technical Information Center, DOE-ORO, Oak Ridge, Tennessee 37830