OAK RIDGE NATIONAL LABORATORY LIBRARIES

3 4456 0570510 9

DLC-41

OAK RIDGE NATIONAL LABORATORY

managed by
MARTIN MARIETTA ENERGY SYSTEMS, INC.
for the
U.S. DEPARTMENT OF ENERGY

RSIC DATA LIBRARY COLLECTION

VITAMIN-C

171 Neutron, 36 Gamma-Ray Group Cross Sections
in AMPX and CCCC Interface Formats
for Fusion and LMFBR Neutronics

Contributed by

Oak Ridge National Laboratory
Oak Ridge, Tennessee

RADIATION SHIELDING INFORMATION CENTER

Legal Notice: This report was prepared as an account of Government sponsored work and describes a code system or data library which is one of a series collected by the Radiation Shielding Information Center (RSIC). These codes/data were developed by various Government and private organizations who contributed them to RSIC for distribution; they did not normally originate at RSIC. RSIC is informed that each code system has been tested by the contributor, and, if practical, sample problems have been run by RSIC. Neither the United States Government, nor the Department of Energy, nor Martin Marietta Energy Systems, Inc., nor any person acting on behalf of the Department of Energy or Energy Systems, makes any warranty, expressed or implied, or assumes any legal liability or responsibility for the accuracy, completeness, usefulness or functioning of any information code/data and related material, or represents that its use would not infringe privately owned rights. Reference herein to any specific commercial product, process, or service by trade name, trademark, manufacturer, or otherwise, does not necessarily constitute or imply its endorsement, recommendation, or favoring by the United States Government, the Department of Energy, Energy Systems, nor any person acting on behalf of the Department of Energy or Energy Systems.

This code/data package is a part of the collections of the Radiation Shielding Information Center (RSIC) developed by various government and private organizations and contributed to RSIC for distribution. Any further distribution by any holder, unless otherwise specifically provided for is prohibited by the U.S. Dept. of Energy without the approval of RSIC, P.O. Box 2008, Oak Ridge, TN 37831-6362.

Documentation for DLC-41/VITAMIN-C Data Package

PAGE

RSIC Data Library Abstract iii

ORNL-RSIC-37, "The CTR Processed Multigroup Cross-Section Library for Neutronics Studies," by R. W. Roussin, C. R. Weisbin, J. E. White, N. M. Greene, R. Q. Wright, and J. B. Wright . . 1

Introduction 3
Specifications 4
Codes Used for Generating the Library 9
Output Formats for Distributing the Library 11
Codes Used for Retrieving and Manipulating the Data 12
Contents of the Preliminary Data Library Package 12
Validation Programs 14
General Release of the CTR-PMCSL as VITAMIN-C 15
VITAMIN-C as an ANS Standard Library 16
References 18
Appendicies A-D 20-31

"Sample Problems for DLC-41/VITAMIN-C," presented at the RSIC Workshop on Multigroup Cross-Section Handling Codes by R. W. Roussin and D. B. Simpson (March 1978) 33

(Total Pages 123; September 1980)

RSIC DATA LIBRARY DLC-41

1. NAME AND TITLE OF DATA LIBRARY

VITAMIN-C: 171 Neutron, 36 Gamma-Ray Group Cross Sections in AMPX and CCCC Interface Formats for Fusion and LMFBR Neutronics.

2. NAME AND TITLE OF DATA RETRIEVAL PROGRAMS

No retrieval program is included in the package.

3. CONTRIBUTOR

Oak Ridge National Laboratory, Oak Ridge, Tennessee.

4. HISTORICAL BACKGROUND AND INFORMATION

DLC-41 was designed as a program for the development, generation, validation, and distribution of a general purpose Processed Multigroup Cross Section Library (PMCSL) for use in controlled thermonuclear research (CTR) neutronics studies. A single 171 neutron, 36 gamma-ray group cross-section library useful for both CTR and LMFBR neutronics analysis was defined. The master library was generated using the MINX neutron processor and the gamma-ray processor from the AMPX system. A preliminary release was made to stimulate implementation and testing at several installations to improve the quality of the libraries which were untimately distributed as DLC-41/VITAMIN-C and DLC53/VITAMIN-4C.

5. APPLICATION OF THE DATA

The United States Energy Research and Development Administration (ERDA) Division of Controlled Thermonuclear Research (DCTR) began in 1974 to sponsor the Radiation Shielding Information Center (RSIC) at Oak Ridge National Laboratory (ORNL) to provide nuclear data and other information to meet the needs of ERDA-DCTR contractors. The VITAMIN-C project was the first special activity of RSIC in its role as the Nuclear Data Center for ERDA-DCTR and involves the generation, packaging, distribution, validation, and maintenance of a general-purpose multigroup cross-section library for neutronics and other radiation transport studies.

DLC-41/VITAMIN-C was reorganized by removing the AMPX modules from the package. The sample problems are designed to be executed using PSR-117/MARS (or PSR-63/AMPX-II). The change was made to try to minimize the updating required when a change is made to a retrieval code needed by a particular DLC.

6. SOURCE AND SCOPE OF DATA

The MINX computer code generates multigroup neutron cross sections with self-shielding factors. For a given nuclide, MINX calculates multigroup energy-averaged microscopic neutron cross sections from evaluated cross section files in ENDF format. Group constants in both the AMPX and CCCC interface formats are produced by a version of MINX which is operational on the IBM 360 system at ORNL. The Bondarenko method (narrow resonance approximation) is employed to create group dependent resonance self-shielding factors to account for temperature and dilution effects.

MINX was developed to calculate multigroup constants with user control over computational errors. This helps to distinguish uncertainties in the multigroup data arising from numerical approximations in the averaging procedure from those due to errors in the basic ENDF cross section data.

H, ^{2}H, ^{3}H, ^{4}He, ^{6}Li, ^{7}Li, ^{9}Be, ^{10}B, ^{11}B,

^{12}C, ^{14}N, ^{16}O, F, ^{23}Na, Mg, ^{27}Al, Si, P, S, K,

Ca, Ti, V, Cr, ^{55}Mn, Fe, ^{59}Co, Ni, Cu, ^{63}Cu, ^{65}Cu,

$^{2}Zirc$, ^{93}Nb, Mo, ^{107}Ag, ^{109}Ag, Cd, Sn, ^{151}Eu,

^{152}Eu, ^{153}Eu, ^{154}Eu, ^{181}Ta, ^{182}W, ^{183}W, ^{184}W,

Pb, ^{232}Th, ^{233}U, ^{234}U, ^{235}U, ^{236}U, ^{238}U, ^{238}Pu,

^{239}Pu, ^{240}Pu, ^{241}Pu, ^{242}Pu, ^{241}Am.

7. DISCUSSION OF THE DATA RETRIEVAL PROGRAM

Not applicable.

8. DATA FORMAT AND COMPUTER

EBCDIC card images; IBM 360/91.

9. TYPICAL RUNNING TIME

Not applicable.

10. REFERENCES

R. W. Roussin, C. R. Weisbin, J. E. White, N. M. Greene, R. Q. Wright, and J. B. Wright, "The CTR Processed Multigroup Cross-Section Library for Neutronics Studies," ORNL-RSIC-37 (July 1980).

R. W. Roussin and D. B. Simpson, "Sample Problems for DLC-41/VITAMIN-C," presented at the RSIC Workshop on Multigroup Cross-Section Handling Codes (March 1978).

11. CONTENTS OF LIBRARY

Included are the referenced documents and a reel of magnetic tape which contains the neutron group cross sections, JCL and input data, and output from problems written in EBCDIC characters; total records 521,652.

12. DATE OF ABSTRACT

December 1984.

KEYWORDS: AMPX INTERFACE FORMAT; COUPLED NEUTRON-GAMMA-RAY CROSS SECTIONS; CTR PROCESSED CROSS-SECTION LIBRARY; GAMMA-RAY CROSS SECTIONS; GAMMA-RAY PRODUCTION DATA; MULTIGROUP CROSS SECTIONS; MULTIGROUP CROSS SECTIONS BASED ON ENDF/B; NEUTRON CROSS SECTIONS; REACTION CROSS SECTIONS

INTRODUCTION

DLC-41/VITAMIN-C has been reorganized by removing the AMPX modules from the package. The sample problems are now designed to be executed using PSR-117/MARS (or PSR-63/AMPX-II when it is released for distribution). The change was made to try to minimize the updating required when a change is made to a retrieval code needed by a particular DLC.

The revised package is designated DLC-41B. Users should watch the RSIC Newsletter for update announcements for the data in DLC-41 or for changes in the retrieval codes in PSR-117/MARS.

UPDATE

VITAMIN-C was updated in July 1979, the new version being designated DLC-41C. It also is designed to be used in conjunction with PSR-117/MARS or with PSR-63/AMPX-II. Details of the update are described in the July 1, 1979 RSIC Newsletter.

ORNL/RSIC-37
(ENDF-296)

Contract No. W-7405-eng-26

Engineering Physics Division

Radiation Shielding Information Center

VITAMIN-C:

THE CTR PROCESSED MULTIGROUP CROSS-SECTION LIBRARY

FOR NEUTRONICS STUDIES[1]

R. W. Roussin, C. R. Weisbin, J. E. White[2]
N. M. Greene,[2] R. Q. Wright,[2] and J. B. Wright

Date Published - July 1980

[1]Research sponsored jointly by the Department of Energy, the Nuclear Regulatory Commission under Interagency Agreement DOE No. 40-548-75, and the Defense Nuclear Agency under Interagency Agreement DOE No. 40-46-64.

[2]Computer Sciences Division
Union Carbide Corporation Nuclear Division

NOTICE This document contains information of a preliminary nature. It is subject to revision or correction and therefore does not represent a final report.

OAK RIDGE NATIONAL LABORATORY
Oak Ridge, Tennessee 37830
Operated by
UNION CARBIDE CORPORATION
for the
DEPARTMENT OF ENERGY

1.0 Introduction

1.1 Purpose

The United States Energy Research and Development Administration (ERDA) Division of Controlled Thermonuclear Research (DCTR) began in 1974 to sponsor the Radiation Shielding Information Center (RSIC) at Oak Ridge National Laboratory (ORNL) to provide nuclear data and other information to meet the needs of ERDA-DCTR contractors. The project described in this report is the first special activity of RSIC in this role as the Nuclear Data Center for ERDA-DCTR and involves the generation, packaging, distribution, validation, and maintenance of a general-purpose multigroup cross-section library for neutronics and other radiation transport studies.

The development of the processed cross section library proceeded through the helpful cooperation of many CTR contractors. They provided valuable input in defining the specifications to ensure the relevance of the library in practical design applications and suggested procedures for the validation of the library. Several also participated in the validation program prior to the general release of the library by solving problems and comparing results to those obtained with calculations using earlier libraries and with results of experiments.

1.2 Past Role of RSIC in the DCTR Neutronics Community

During the Fusion Reactor Technology International Working Session held in Oak Ridge in 1971, an announcement was made of RSIC as a source of shielding information and data. Following the conference, we were contacted by many interested in controlled thermonuclear research (CTR) in radiation analysis. As a result, we have broadened our scope to include fusion research as we review the radiation transport literature and follow current computer code development and various programs for measuring, evaluating, and compiling cross sections. With the encouragement of several CTR government contractors, we gave support to efforts to develop data processing codes to meet unfilled needs for nuclear data (e.g. kerma factors).

A summary of services to the CTR neutronics community is presented in Ref. 1. These have been extended to include special activities as the DCTR Nuclear Data Center.

1.3 RSIC Role as the Nuclear Data Center for DCTR

RSIC began to supply the specialized cross-section requirements of the CTR neutronics community in FY 1975.

A USNDC CTR Subcommittee meeting in 1974 served as a forum in which RSIC presented plans for the establishment of an evaluated cross section library and a processed multigroup cross section library for CTR.

During discussions about the processed multigroup cross section library for use in CTR neutronics studies, various subcommittee members and other CTR contractors expressed interest in developing a processed library with more flexibility and application than that used in earlier CTR studies. It was evident that an unusual effort would be required to provide the general purpose library for DCTR contractors and the efforts of RSIC were focused on that project as the first special activity in its role as Data Center for DCTR.

1.4 Program for the Development, Generation, Validation, and Distribution of the CTR Processed Multigroup Cross Section Library (PMCSL)

The various parts of the program to produce the ERDA-DCTR Processed Library are discussed in the remainder of this report. The specifications and methods of determining them are described in Section 2.0. The computer codes used to generate the data are indicated in Section 3.0. Section 4.0 discusses the various formats for transmitting the library to other installations, and manipulation codes which will be distributed as a part of the data package are discussed in Section 5.0. The contents of the initial data library package, including the sample problems provided, are summarized in Section 6.0. A description of a limited validation program for the data library is given in Section 7.0. A discussion of the release for general distribution of the libraries and retrieval codes is given in Section 8.0. The designation of final library (VITAMIN-C) as an ANS Standard is discussed in Section 9.0.

2.0 Specifications

2.1 Survey of CTR Community Needs

2.1.1 Background

The Radiation Shielding Information Center (RSIC) prepared a draft proposal[2] titled "Nuclear Data Services for the CTR Community" which was circulated by Lester Price, an ERDA-DCTR staff member, to various interested agencies and groups. A presentation of RSIC's plans was made at the November 1974, Washington, D.C. USNDC-CTR Subcommittee meeting. The discussion at the meeting about RSIC's plans for generating multigroup data emphasized the need for further study. Don Steiner, the Subcommittee Chairman, suggested that an informal advisory committee be utilized by RSIC to try to formulate plans to better meet the current needs for CTR neutronics calculations. Following the meeting, personnel at the University of Wisconsin, Princeton Plasma Physics Laboratory, the University of Texas, Battelle Northwest, Los Alamos Scientific Laboratory, Lawrence Livermore Laboratory, General Atomic, Argonne National Laboratory, and Oak Ridge National Laboratory were contacted and their needs surveyed.

2.1.2 Results of Survey

The conversations and correspondence with the informal advisory committee resulted in a better definition of the current needs of the CTR neutronics community. In general, it was felt that the Bondarenko[2,3] formalism for self-shielding and temperature dependence effects should be utilized. Many of those contacted felt that finer energy group structure definition was needed particularly in the high energy region. The reasoning was that they would like to be able to conveniently make changes to the multigroup data which would reflect information that might be obtained from new cross section measurements for high energy reactions. Most of those contacted felt that P_3 Legendre expansion was sufficient. Some people were interested in having coupled neutron and gamma-ray cross section libraries. Others felt that gamma production and interaction data were necessary, but wanted to have the capability of doing each part of the calculation separately. It was felt desirable to have individual reaction cross sections and scattering matrices. There seemed to be consensus that energy boundaries should be related to multigroup sets that had been used previously for neutronics calculations. Finally, it was felt that within the concept of the Bondarenko formalism it was sufficient to supply means of doing a simple homogeneous interpolation and iteration for a given problem to determine the appropriate values of σ_0 and T.

A memo[4] summarizing the results of the survey and giving proposed specifications for a processed cross section library of general usefulness for CTR neutronics studies was prepared and distributed for comment. The memo identified 156 neutron groups, 23 gamma-ray groups and P_3 Legendre expansion for 44 materials. The MINX[5] neutron processor was suggested for obtaining neutron cross sections and Bondarenko factors over a wide range of temperatures and background cross sections. The output format suggested was the AMPX[6] Master Interface Format so that complete information could be made available for all reaction cross sections and transfer matrices. A weighting function was suggested which contained a Maxwellian thermal group, a "1/E" slowing down region, a fission spectrum, and a fusion peak.

Comments on these proposed specifications were then received and considered. Additional materials and energy groups were requested. It was suggested that the velocity exponential form be used to represent the fusion peak. A special weighting function for the thermal group for a few materials was suggested for more detailed study of systems in which neutron transport is dominated by Li-6. A P_5 expansion for U-238 was suggested for more detailed studies of neutron transport in that medium.

There was some feeling that the data should also be made available in CCCC[7] Interface Format. Although that format is not at the present time as flexible and comprehensive as the AMPX interface format (e.g., fewer reactions allowed, gamma-ray production treatment inadequate), it was felt that some users in the ERDA-DRRD reactor physics community might benefit by having access to the library. In addition, another project at ORNL involving the generation of multigroup cross sections, as described in Section 2.2, enhanced the prospects of providing data in both AMPX Interface and CCCC Interface formats.

2.2 Relationship to the DOE-DRRT Coupled Neutron-Gamma-Ray Libraries

As the effort to define specifications for CTR user needs was proceeding, a similar activity on behalf of the ERDA Division of Reactor Development and Demonstration (DRRD) [now DOE-RRT] was in progress within the ORNL Engineering Physics Division. The DRRT project has as its goal the generation of pseudo-composition independent fine-and broad-group neutron and gamma-ray cross section libraries as well as fine- and broad-group composition-dependent coupled libraries based on a Clinch River Breeder Reactor (CRBR) model. Since many of the materials needed for this purpose would also be requested for the CTR Library, it was felt that it would be cost effective to combine the specifications needed for both user communities and process a single master library which could serve the needs of each. This master library serves as the CTR multigroup library without further specific reduction in number of energy groups. The specifications are given in sections 2.3 and 2.4. The DRRT libraries are derived from this master and the specifications are documented in Ref. [8].

2.3 Resulting Physical Specifications

2.3.1 Materials to be Included

A list of the materials to be processed, the source of the evaluated data to be used, and values of temperatures and background cross sections for each material are given in Table 1.

The list includes materials proposed for conceptual designs of both fusion and hybrid fusion/fission systems.

2.3.2 Energy Group Structure to be Used

The energy structure selected for the 171 neutron groups contained in the CTR processed cross section library is given in Table A1 of Appendix A. Also indicated therein are the relationship of the 171 neutron group structures to those that have been commonly used in CTR neutronics work, such as the 100 group structure of DLC-2[9] and DLC-37[10] and the 52 group structure of DLC-28.[11] In addition, the relationship to the 239 group CSEWG standard[12] and to the 126 group structure of the DRRT libraries[8] are also indicated.

The energy structure selected for the 36 gamma-ray groups contained in the CTR Processed Multigroup Cross Section Library (PMCSL) is given in Table A2 of Appendix A. The relationship of this 36 group structure to other familiar gamma-ray group structure is also shown.

2.3.3 Weighting Function Used to Generate the CTR Processed Multigroup Cross Section Library

For the purpose of generating the multigroup cross sections, the neutron energy region between thermal and 17.333 MeV was divided into 6 regions and a different functional form was assumed for each region. Included are a Maxwellian thermal spectrum, a fission spectrum, and a DT

Table 1. Materials to be Included in the CTR Processed Multigroup Cross Section Library (All Data to be Generated at 300, 400, and 2100°K)

Material	MAT*	Authors	Institution	Values of σ_o(b)
H-1	1269	L. Stewart, R. LaBauve, P. Young	LASL	
H-2	1120	B. Leonard, L. Stewart	BNWL	
H-3	1269	L. Stewart	LASL	
He-4	1270	R. Nisley, G. Hale, P. Young	LASL	
Li-6	1271	G. Hale, D. Dodder, P. Young	LASL	10^3 to 1 (by decades)
Li-7	1272	R. LaBauve, L. Stewart, M. Battat	LASL	10^3 to 1
Be-9	1289	R. Howerton, S. Perkins		10^3 to 1
B-10	1273	G. Hale, R. Nisley, P. Young	LASL	10^3 to 1
B-11	1160	C. Cowan	GE	10^3 to 1
C-12	1274	F. Perey, C. Fu	ORNL	10^3 to 0.1
N-14	1275	P. Young, D. Foster, G. Hale	LASL	
O-16	1276	P. Young, D. Foster, G. Hale	LASL	10^3 to 0.1
F	1277	C. Fu, D. Larson	ORNL	10^3 to 0.1
Na-23	1156	Paik, Pitterle	WARD	10^3 to 0.1
Mg	1280	M. Drake, M. Fricke	SAI	10^3 to 0.1
Al-27	1193	P. Young, G. Foster	LASL	10^3 to 0.1
Si	1194	D. Larson, F. Perey	ORNL	10^3 to 0.1
P	7019***	R. Howerton	LLL	10^3 to 0.1
S	7020***	R. Howerton	LLL	10^3 to 0.1
K	1150	M. Drake	GGA	10^3 to 0.1
Ca	1195	C. Fu, F. Perey	ORNL	10^3 to 0.1
Ti	1286	R. Howerton, R. Haight, S. Perkins	LLL	10^3 to 0.1
V	1196	S. Penny, L. Owen	ORNL	10^3 to 0.1
Cr	1191	A. Prince	BNL	10^5 to 1
Mn-55	1197	S. Takahashi	BNL	10^3 to 0.1
Fe	1192	C. Fu, F. Perey	ORNL	10^3 to 0.1
Co-59	1199	T. Krieger (BNL), A. Smith, D. Smith	BNL, ANL	10^3 to 0.1
Ni	1190	M. Bhat	BNL	10^3 to 0.1
Cu	1295	M. Drake, M. Fricke	SAI	10^3 to 0.1
Cu-63**	1085			10^3 to 0.1
Cu-65**	1086			10^3 to 0.1
Zirc-2	1285	B. Leonard	BNWL	10^3 to 0.1
Nb-93	1189.	R. Howerton (LLL), A. Smith, P. Gunther, J. Whalen	LLL, ANL	10^3 to 0.1
Mo	1287	R. Howerton	LLL	10^5 to 1
Ag-107	1138	M. Bhat, A. Prince	BNL	10^5 to 1
Ag-109	1139	M. Bhat, A. Prince	BNL	10^5 to 1
Cd	1281	S. Pearlstein	BNL	10^5 to 1
Sn	7039***	R. Howerton	LLL	10^5 to 1
Eu-151	1290	H. Takahashi	BNL	10^5 to 1

Table 1. (continued)

Material	MAT*	Authors	Institution	Values of σ_o(b)
Eu-152	1292	H. Takahashi	BNL	10^5 to 1
Eu-153	1291	H. Takahashi	BNL	10^5 to 1
Eu-154	1293	H. Takahashi	BNL	10^5 to 1
Ta-181	1285	R. Howerton, S. Perkins, M. MacGregor	LLL	10^5 to 1
W-182	1128	J. Otter, E. Ottewitte, P. Rose, P. Young (LASL)	AI, LASL	10^5 to 1
W-183	1129	J. Otter, E. Ottewitte, P. Rose, P. Young (LASL)	AI, LASL	10^5 to 1
W-184	1130	J. Otter, E. Ottewitte, P. Rose, P. Young (LASL)	AI, LASL	10^5 to 1
W-186	1131	J. Otter, E. Ottewitte, P. Rose, P. Young (LASL)	AI, LASL	10^5 to 1
Pb	1288	C. Fu, F. Perey	ORNL	10^5 to 1
Th-232	1296	W. Wittkopf, Roy, Z. Livolsi	B&W	10^5 to 1
U-233	1260	N. Steen	BAPL	10^5 to 1
U-234	1043	M. Drake, Nichols	GGA	10^5 to 1
U-235	1261	L. Stewart, H. Alter (AI), R. Hunter	LASL, AI	10^5 to 1
U-236	1163	J. McCrosson	SRL	10^5 to 1
U-238	1262	N. Paik	WARD	10^4 to 0.1
Pu-238	1050	H. Alter	AI	10^4 to 1
Pu-239	1264	B. Hutchins (GE), R. Hunter, L. Stewart	GE, LASL	10^5 to 1
Pu-240	1265	E. Pennington, H. Hummel	ANL	10^5 to 1
Pu-241	1266	H. Hummel, E. Pennington	ANL	10^5 to 1
Pu-242	1161	H. Alter, C. Dunford	AI	10^5 to 1
Am-241	1056	J. Smith, R. Grimesey	ANC	10^5 to 1

*All data generated from ENDF/B-IV unless otherwise noted (Ref. 15)
**From ENDF/B-III (Ref. 16)
***From Livermore Evaluated Data Library (Ref. 17)

Key to Laboratory Abbreviations:

AI	Atomics International
ANC	Aerojet Nuclear Company
ANL	Argonne National Laboratory
B&W	Babcock and Wilcox
BAPL	Bettis Atomic Power Laboratory
BNL	Brookhaven National Laboratory
BNWL	Battelle Northwest Laboratory
GE	General Electric
GGA	Gulf General Atomic
LASL	Los Alamos Scientific Laboratory
LLL	Lawrence Livermore Laboratory
ORNL	Oak Ridge National Laboratory
SAI	Science Applications, Inc.
SRL	Savannah River Laboratory
WARD	Westinghouse Advanced Reactor Division

fusion neutron spectrum with "1/E" slowing down regions joining these three prominent features. These are summarized in more detail in Table 2.

For the gamma-ray energy region, no energy dependence was assumed, i.e., a "flat" weighting function was used. This assumption is commonly used for producing gamma-ray multigroup cross sections.

2.3.4 Expansion Order Tolerances Used in the Neutron Cross Section Processing

The Legendre expansion order is P_3. The fractional error tolerances (percent) are set at 0.5 except for integration which is 0.1%. (The current library, used for preliminary testing, contains data processed with 0.5% tolerance for the heavy nuclides. For the light nuclides the fractional error tolerance (percent) of the current file is 1.0 for resonance reconstruction and for linearization, 0.5 for thinning, and 0.1 for integration.)

The above tolerances refer to control parameters used by the MINX program.

2.4 Resulting Format Specifications

As was mentioned earlier in Section 2.1.2, the AMPX Master Interface Format was chosen as the basic form for the CTR library because it has the generality to provide data in as much detail as is given in the basic ENDF file from which the multigroup cross sections are derived. All partial reaction cross sections and transfer matrices are present and are designated using the same identifying integers (MT numbers) as those used in ENDF.

Data are available in the form of a 171 neutron group AMPX interface, a 171 neutron, 36 gamma-ray group production AMPX interface, and a 36 group, gamma-ray interaction AMPX interface. These will give the user tremendous flexibility in having as much detailed information available as possible.

The neutron data are also available in CCCC format as ISOTXS neutron cross section and BRKOXS self-shielding factor standard interface files. In order for users of these files to have the capability of also performing coupled neutron and gamma-ray transport studies, some provisions have been made to allow the combining of these files with the AMPX gamma-ray production and interaction files to produce problem-dependent (self-shielded) coupled cross section libraries for radiation transport studies. More details of these features are provided in Section 5.2.

3.0 Codes Used for Generating the Library

3.1 MINX Computer Code for Generation of Multigroup Neutron Cross Sections with Self-Shielding Factors

For a given nuclide, MINX calculates multigroup energy-averaged microscopic neutron cross sections from evaluated cross section files in ENDF format.[18] Group constants in both the AMPX interface and CCCC interface

Table 2. Neutron Energy Weighting Function Used for the CTR-PMCSL

Functional Form	Energy Limits
(1) Maxwellian Thermal Spectrum (300°K) $S_1(E) = C_1 E e^{-E/kT}$	10^{-5} eV to 0.125 eV
(2) "1/E" Slowing-Down Spectrum $S_2(E) = C_2/E$	0.125 eV to 820.8 keV
(3) Fission Spectrum (Θ = 1.4 MeV) $S_3(E) = C_3 E^{1/2} e^{-E/\Theta}$	820.8 keV to 10.0 MeV
(4) "1/E" Spectrum $S_4(E) = C_4/E$	10.0 MeV to 12.57 MeV
(5) Velocity Exponential Fusion Peak (E_p = 14.07 MeV) (kT = 0.025 MeV) $S_5(E) = C_5 \exp\left[-\frac{5}{kT}\left(E^{1/2} - E_p^{1/2}\right)^2\right]$	12.57 MeV to 15.57 MeV
(6) "1/E" Spectrum $S_6(E) = C_6/E$	15.57 MeV to 17.333 MeV

formats are produced by a version of MINX which has been made operational on the IBM 360 system at ORNL and extended to allow this dual output capability. The AMPX format is more flexible than CCCC in that all partial cross section information is retained (e.g. group-to-group transfer cross sections for discrete inelastic levels, and group averaged cross sections for threshold reactions (e.g., n,n'α)). The Bondarenko method (narrow resonance approximation) is employed to create group dependent resonance self-shielding factors to account for temperature and dilution effects.

MINX was developed to calculate multigroup constants with user control over computational errors. This helps to distinguish uncertainties in the multigroup data arising from numerical approximations in the averaging procedure from those due to errors in the basic ENDF cross section data.

3.2 AMPX Modules for Gamma-Ray Production and Interaction Cross Sections Generation

The LAPHNGAS module calculates multigroup secondary gamma-ray production cross sections and/or multigroup secondary gamma-ray yields (multiplicities). To allow for self-shielded gamma-ray production matrices, LAPHNGAS was modified to place multigroup yields for all ENDF/B File 12 reactions on the LAPHNGAS output file. The ENDF/B File 13 production data is not self-shielded in the present approach.

The SMUG module calculates multigroup photon cross sections with transfer coefficients represented by a user specified Legendre approximation.

4.0 Output Formats for Distributing the Library

4.1 AMPX Interface Formats

The AMPX Master Interface Format is described in Ref. 6.

There are two forms of the format: an unformatted (binary) form which is used by modules within the AMPX system and a card image form (BCD). The BCD form will be used for distributing the library, since that form is normally not dependent on computer systems. An appropriate BCD-to-binary form conversion code will be provided so the user can transform the library into the form used in the manipulation programs.

4.2 CCCC Interface Formats

A description of the CCCC interface formats for neutron cross sections (ISOTXS) and self-shielding factors (BRKOXS) is included in Ref. 7. There are also binary and BCD forms for these files, and the BCD version, along with a conversion code will be the form used for distribution.

4.3 Working Library Formats

It is likely that special libraries will be generated from the basic master (171,36) coupled library and made available in working formats such as that used by the ANISN[19] and DTF [20] series of radiation transport computer codes. These will be generated for conditions pertinent to a particular problem and will probably not be suitable for general application.

5.0 Codes Used for Retrieving and Manipulating the Data

5.1 Retrieval and Manipulation Codes for the AMPX Interface Format.

A wide variety of user operations is available through the use of various modules of the AMPX system. The names of the codes and a brief description of their functions are given in Ref. 21.

5.2 Retrieval and Manipulation Codes for CCCC Interface Format

A similar range of user operations is available for the CCCC interface form of CTR-PMCSL. The names of the codes and a brief description of their functions are given in Appendix B. Further details, including input instructions are given in Ref. 21.

5.3 Additional Codes Used in the CTR PMCSL Sample Problems.

Some additional computer codes were utilized to allow the execution of the transport calculations by means of the ANISN program. These are described briefly in Appendix B and additional descriptions and input instructions are given in Ref. 21.

6.0 Contents of the Preliminary Data Library Package

6.1 AMPX Interface Form

The AMPX interface form of the CTR PMCSL consists of three elements: (1) AMPX BCD Master Interface Files; (2) AMPX Interface Retrieval Codes; (3) Sample Input Data and Output Results. This form of the data library is described in more detail in Appendix C. Two sample problems have been prepared and executed. The first is the calculation of the infinite medium representation of the ZPR-6/7 experiment[22] to illustrate the resonance self-shielding capabilities of the library and codes. The second is the so-called CTR standard blanket.[23]

6.2 CCCC Interface Form

The CCCC Interface form of the CTR PMCSL consists of four elements: (1) CCCC BCD Neutron Interface Files; (2) AMPX BCD Master Interface Files; (3) Appropriate CCCC Interface and AMPX Interface Retrieval Codes; (4) Sample Input Data and Output Results. This form of the Data Library is described in more detail in Appendix D.

6.3 Known Deficiencies in the Preliminary Data Package

Results of initial data testing performed on the preliminary library

During the course of library development, several MINX processing problems introduced deficiencies which influenced the usefulness of some nuclides in the preliminary library. The problems identified are listed below:

(a) Resonance Reconstruction

(1) ^{238}U has an inadequate number of points about the peaks for resonances in the 1-5 keV energy range (processing limitation in BCD ENDF/B representation employed).

(2) An IBM precision difficulty at the break points between the resonance and smooth background regions created an error in the pointwise data at the point of discontinuity.

(b) Multigroup averaging

(1) The unresolved background cross sections are not included.

(2) For materials with resonance parameters, there is a discrepancy on the order of a few percent in the group spanning the discontinuity cited in item (a.2) above.

(3) The Mo cross sections are too high in the unresolved resonance range due to the omission of the abundance in the interference term (only affects the total and elastic scattering cross sections).

(c) Inelastic scattering transfer matrix calculations

(1) There are small negative P_o matrix elements for Na (MT = 52,56), ^{55}Mn (MT = 54), ^{235}U (MT = 62,65), ^{239}Pu (MT = 75).

(2) Inelastic matrix sums do not add precisely to the group averaged cross section. Generally, the "column sums" are lower and the threshold group has the largest discrepancy.

(d) Continuum scattering transfer matrix calculation

The P_ℓ terms (where $\ell > 0$) are missing for all nuclides in the AMPX interface format.

It is emphasized that all of the above mentioned processing problems have been resolved and were eliminated from the library when those nuclides affected were reprocessed.

7.0 Validation Program

A meeting was held at ORNL in August, 1975 where several CTR contractors were invited to come and discuss procedures for validating the CTR Processed Cross Section Library. The goals of such a program were discussed, some milestones were suggested, and participation in various calculational efforts was offered by the attendees.

7.1 Goals

The goals are primarily to test the validity of the output of the neutron and gamma-ray processing codes and to determine the adequacy of the various retrieval codes that support the library. No attempt was made to separate processing approximations from nuclear data deficiencies in the basic evaluated data from which the multigroup data are derived.

7.2 Milestones

Milestones were proposed at the time of the meeting. 9/1/75: retrieval codes to be sent out; 9/26/75: library goes out; November ANS meeting: check on progress; 1/1/76: calculations completed and first round analysis done; 2/1/76: library reprocessed in final form (171 group); 3/1/76: calculations to be redone; 6/30/76: final report on validation (RSIC report). Various problems have been encountered which have caused the starting portion of the program to slip by several months. However, during the delay to release the data to participants of the validation effort, several data and programming difficulties have been discovered and corrected. The fact that these have been fixed prior to release should make the utilization that much easier for the participants.

The various calculational efforts which were tentatively offered by various installations are listed in Table 3.

7.3. Results

Participants in the voluntary validation program obtained and utilized the preliminary versions of the libraries as described in Appendices C and D. Another meeting of the group was held at ORNL in July 1977 to summarize the experience that had been gained.

Results of the validation program were very helpful in developing the versions of the cross section library and associated retrieval and manipulation codes to be released for general distribution.

The AMPX formatted version of the library was implemented at six laboratories; Argonne National Laboratory, Battelle Northwest Laboratory, Princeton Plasma Physics Laboratory, Oak Ridge National Laboratory, the University of Wisconsin, and Westinghouse Fusion Power Systems. The CCCC formatted version was implemented at Los Alamos Scientific Laboratory. Calculations at Lawrence Livermore Laboratory of the CTR Standard Blanket problem using Monte Carlo and a different library provided an independent test of the data and codes in the CTR PMCSL.

The validation effort helped debug some data sets and retrieval codes in the preliminary versions of the libraries. In addition, some participants also converted retrieval codes to UNIVAC (U. Wisconsin) and CDC (Battelle Northwest Laboratory and Westinghouse Fusion Power System) computers and made them available for general distribution through RSIC. In addition, Los Alamos Scientific Laboratory supplied improved routines for more efficient retrieval and manipulation of the CCCC formatted data.

Some results of the calculations were presented at the June 1976 American Nuclear Society Meeting[24] and at an RSIC Seminar on Multigroup Cross Sections in March 1978.[25]

8.0 General Release of the CTR-PMCSL as VITAMIN-C

8.1 Cross Section Libraries

Initial results of the validation effort indicated satisfaction with the basic form and content of the library and plans for general release were implemented. The first release of the library for general distribution was announced in the February, 1977 RSIC Newsletter. The 36 material library in AMPX format was designated VITAMIN-C (Versatile Integrated Techniques for Utilizing AMPX and MINX Cross Sections in Neutronics Calculations), and the package contained retrieval codes for AMPX formatted data as described in Appendix B.

In December 1977, the second release was announced in the RSIC Newsletter. An additional 25 materials were added to the original 36. This version, designated DLC-41B/VITAMIN-C, did not include retrieval codes. They were removed from each data library in AMPX format to ease the updating mechanism when changes were required in a retrieval code. Separate packages containing appropriate retrieval codes were planned and distributed as indicated below.

In March 1978 the VITAMIN-C library was one of the libraries featured in the Workshop portion of an RSIC Seminar-Workshop on Multigroup Methods.[25] The workshop demonstrated the utilization of the various retrieval codes for deriving problem-dependent cross sections from the basic VITAMIN-C library.

The third update, designated DLC-41C/VITAMIN-C, was announced in the July 1979 RSIC Newsletter. An additional 5 materials were added, and revisions were made to a number of the existing data sets.

The version of the library in CCCC format ('4C'), designated DLC-53/VITAMIN-4C, was announced in the June 1978 RSIC Newsletter.

8.2 Retrieval Codes

As indicated above, approximate retrieval codes which can be used to manipulate cross section libraries in AMPX and CCCC formats have been collected and packaged in RSIC.

Retrieval codes for AMPX formatted data for non-IBM hardware have been contributed by members of the validation group and other RSIC users. The RSIC package PSR-112A/MAME[26] contains CDC and PSR-112B/MAME contains UNIVAC versions, respectively, of the important retrieval codes. These were announced in the January 1978 RSIC Newsletter.

Retrieval codes for IBM hardware which can handle both AMPX and CCCC formatted data are found in PSR-117/MARS.[21] That package was originally announced in the April 1978 RSIC Newsletter and updated in May 1979. The CCCC codes came originally from LASL and WARD and were converted to IBM at ORNL. The AMPX codes come from the ORNL code system which is packaged in RSIC as PSR-63/AMPX-II.

9.0 VITAMIN-C as an ANS Standard Library

The ANS 6.1.2 Working Group on Shielding Cross Sections has prepared a proposed Standard on Neutron and Gamma-Ray Cross Sections for Nuclear Radiation Protection Calculations[27] which is currently undergoing the review and balloting procedure within the American Nuclear Society ANS-6 Radiation Protection and Shielding Standards Subcommittee. The Proposed Standard, which outlines procedures for the preparation of multigroup libraries, recommends DLC-41/VITAMIN-C as an Averaged Data Set which conforms to the Standard.

Table 3. Calculational Efforts Offered by Various Installations as Part of the CTR-PMCSL Validation Effort

OAK RIDGE NATIONAL LABORATORY

1. Standard Blanket[1]
2. TFTR
   (Compare with DLC-37)
3. Fe and C Ring Experiments
   (Compare with AMPX results)
4. Japanese Experiment[2]
5. U. Illinois Fe Sphere[3]
   (Compare with AMPX results)

WESTINGHOUSE FUSION POWER SYSTEM

1. Standard Blanket
2. TFTR Shielding
   (Compare with own library)

UNIVERSITY OF WISCONSIN

1. Standard Blanket
2. TEPR-I (ANL)[4]
3. UWMAK-III

LAWRENCE LIVERMORE LABORATORY

1. Standard Blanket
2. Pulsed Spheres[5]
3. Weale[8]
   (Compare with CLYDE, TART results)

ARGONNE NATIONAL LABORATORY

1. Standard Blanket
2. ANL-TEPR
   (Compare with DLC-37)

PRINCETON PLASMA PHYSICS LABORATORY

1. Standard Blanket
2. PRD Blanket[6]
   (Compare with DLC-28)

LOS ALAMOS SCIENTIFIC LABORATORY

1. Standard Blanket
2. RTPR Benchmark
3. Wyman Experiment[7]
4. Possibly several others

BATTELLE NORTHWEST LABORATORY

1. Standard Blanket
2. Weale Experiment
3. German Experiment
4. Japanese Experiment

References

1. ORNL-TM-4177
2. Nuclear Science and Engineering, Aug. 1975
3. Washington, D.C. Cross Section Conference, 1975
4. ANL/CTR-75-2 and ANL/CTR/TM-51
5. UCRL-74277, Rev. I (1973)
6. MATT-1050
7. Texas Symposium, 1972
8. Reactor Sci. Technol., J. Nucl. Energy, Parts A and B, 14, 91 (1961)

10.0 References

1. R. W. Roussin, D. K. Trubey, and B. F. Maskewitz, "Services to the CTR Community by the Radiation Shielding Information Center," Proceedings of the First Topical Meeting on the Technology of Controlled Nuclear Fusion, Vol. II, p. 227, CONF-740402-P2.

2. R. W. Roussin, "Nuclear Data Services for the CTR Community," presented at the 1974 Washington, D.C. USNDC-CTR Subcommittee meeting; text included in the minutes of that meeting.

3. I. I. Bondarenko, Ed., "Group Constants for Nuclear Reactor Calculations," Consultants Bureau, New York (1964).

4. R. W. Roussin, "Proposed Specifications for a Neutron and Gamma-Ray Multigroup Cross-Section Library for CTR Neutronics Calculations," ORNL Intra-Laboratory Memo, December 19, 1974.

5. C. R. Weisbin, P. D. Soran, R. E. MacFarlane, D. R. Harris, R. J. LaBauve, J. S. Hendricks, J. E. White, R. B. Kidman, "MINX: A Multigroup Interpretation of Nuclear Cross Sections from ENDF/B," LA-6486-MS (ENDF-237), September 1976. Available from the Radiation Shielding Information Center as PSR-105/MINX.

6. N. M. Greene, J. L. Luxius, L. M. Petrie, W. E. Ford, III, J. E. White, and R. Q. Wright, "AMPX: A Modular Code System for Generating Coupled Multigroup Neutron-Gamma Libraries from ENDF/B," ORNL-TM-3706 March, 1976. Available from RSIC as PSR-63/AMPX-II.

7. B. M. Carmichael, "Standard Interface Files and Procedures for Reactor Physics Codes, Version III," LA-5486-MS, February 1974.

8. C. R. Weisbin, R. W. Roussin, J. E. White, and R. Q. Wright, "Specification for Pseudo-Composition-Independent Fine-Group and Composition Dependent Fine-and Broad-Group LMFBR Neutron-Gamma Libraries at ORNL," ORNL-TM-5142 (ENDF-224), December 1975.

9. R. W. Roussin, "Abstracts of the Data Library Packages Assembled by the Radiation Shielding Information Center," ORNL-RSIC-30, Vol. I (1972).

10. D. M. Plaster, R. T. Santoro, and W. E. Ford, III, "Coupled 100-Group Neutron and 21-Group Gamma-Ray Cross Sections for EPR Calculations," ORNL-TM-4872, April 1975. Available from RSIC as DLC-37/EPR.

11. J. T. Kriese, "Coupled Neutron and Gamma-Ray Cross Section Sets for Fusion Reactor Calculations," ORNL-TM-4277, August 1973. Available from RSIC as DLC-28/CTR.

12. C. R. Weisbin and R. J. LaBauve, "Specification of a Generally Useful Multigroup Structure for Neutron Transport," LA-5277-MS (1973).

13. D. E. Bartine, J. R. Knight, J. V. Pace, III, and R. W. Roussin, "Production and Testing of the DNA Few-Group Coupled Neutron-Gamma Cross Section Library," ORNL/TM-4840, March 1977. Available from RSIC as DLC-31/(DPL-1/FEWG1).

14. E. A. Straker, "Suggested Energy Group Bounds for a General Purpose Photon Multigroup Cross Section Set," SAI-74-566-HU.

15. D. Garber, Compiler, "ENDF/B Summary Documentation," BNL 17451 (ENDF-201), 2nd Edition, October 1975.

16. O. Ozer and D. Garber, Assemblers, "ENDF/B Summary Documentation," BNL-17541 (ENDF-201) May 1973.

17. R. J. Howerton, "The Lawrence Livermore Laboratory Evaluated Nuclear Data Library (ENDL) Translated into ENDF/B Format," UCID-16727 (1975).

18. D. Garber, et al., "Data Formats and Procedures for the Evaluated Nuclear Data File, ENDF," BNL-NCS-50496 (ENDF 102), October 1975.

19. W. W. Engle, Jr., "A Users' Manual for ANISN," K-1693 (1967).

20. K. D. Lathrop, "DTF-IV, A FORTRAN IV Program for Solving the Multigroup Transport Equation with Anisotropic Scattering," LA-3373, November 1965.

21. RSIC Package PSR-117/MARS, "Collection of Computer Codes for Manipulating Multigroup Cross Section Libraries in AMPX or CCCC Formats," available from RSIC.

22. "Cross Section Evaluation Working Group Benchmark Specifications," BNL 19302 (ENDF-202), November 1974, Fast Reactor Benchmark No. 12.

23. D. Steiner, "Analysis of a Bench-Mark Calculation of Tritium Breeding in a Fusion Reactor Blanket. The United States Contribution," ORNL-TM-4177, April 1973.

24. R. W. Roussin, C. R. Weisbin, J. E. White, N. M. Greene, R. Q. Wright, and J. B. Wright, "Progress on the Validation of the CTR Multigroup Data Package," Trans., Am. Nuc. Soc., 23 (14) June 1976.

25. D. K. Trubey and H. R. Hendrickson, Compilers, "A Review of Multigroup Nuclear Cross-Section Processing: Proceedings of a Seminar Workshop, Oak Ridge, Tennessee, March 14-16, 1978," ORNL/RSIC-41, October 1978.

26. RSIC Package PSR-112/MAME, "Miscellaneous AMPX-I Modules from Everywhere." Available from RSIC, January 1978.

27. "Neutron and Gamma-Ray Cross Sections for Nuclear Radiation Protection Calculations," Draft of Proposed Standard, November 1979, D. Harris, Chairman, ANS-6.1.2, Rensselaer Polytechnic Institute.

APPENDIX A

Neutron and Gamma-Ray Energy Group Boundaries for the CTR Processed Multigroup Cross Section Library

The 171-neutron and 36-gamma-ray energy group boundaries for the CTR Processed Multigroup Cross Section Library are given in Tables A1 and A2, respectively. The relationship of the group structures of this library to the group structures used in various other libraries is also indicated in the tables.

Table A1. CTR-PMCSL Neutron Energy Group Boundaries and Their Relationship to Those Used for Other Libraries

100n*	52n**	Suggested	Upper Energy (eV)	Lethargy	239n***	126n***
		1	.17333E+08	-.55000E+00	7	
		2	.16487E+08	-.50000E+00	9	
		3	.15683E+08	-.45000E+00	11	
1	1	4	.14918E+08	-.40000E+00	13	1
		5	.14550E+08	-.37500E+00	14	
		6	.14191E+08	-.35000E+00	15	
		7	.13840E+08	-.32500E+00	16	
2	2	8	.13499E+08	-.30000E 00	17	
		9	.12840E+08	-.25000E+00	19	
3	3	10	.12214E+08	-.20000E+00	21	2
		11	.11618E+08	-.15000E+00	23	
4	4	12	.11052E+08	-.10000E+00	25	
		13	.10513E+08	-.50000E-01	27	
5	5	14	.10000E+08	0.	29	3
		15	.95123E+07	.50000E-01	31	
6	6	16	.90484E+07	.10000E+00	33	
		17	.86071E+07	.15000E+00	35	
7	7	18	.81873E+07	.20000E+00	37	4
		19	.77880E+07	.25000E+00	39	
8	8	20	.74082E+07	.30000E+00	41	
		21	.70469E+07	.35000E+00	43	
9	9	22	.67032E+07	.40000E+00	45	5
		23	.65924E+07	.41667E+00	47	
		24	.63763E+07	.45000E+00	49	
10	10	25	.60653E+07	.50000E+00	51	6
		26	.57695E+07	.55000E+00	53	
11	11	27	.54881E+07	.60000E+00	54	7
		28	.52205E+07	.65000E+00	55	
12	12	29	.49659E+07	.70000E+00	56	
		30	.47237E+07	.75000E+00	58	
13	13	31	.44933E+07	.80000E+00	60	8
14	14	32	.40657E+07	.90000E+00	62	
15	15	33	.36788E+07	.10000E+01	64	9
16	16	34	.33287E+07	.11000E+01	66	
		35	.31664E+07	.11500E+01	68	10
17	17	36	.30119E+07	.12000E+01	70	11
		37	.28650E+07	.12500E+01	71	12
18	18	38	.27253E+07	.13000E+01	72	13
		39	.25924E+07	.13500E+01	73	14
19	19	40	.24660E+07	.14000E+01	74	15
		41	.23852E+07	.14333E+01	76	16
		42	.23653E+07	.14417E+01	77	17
		43	.23457E+07	.14500E+01	78	
		44	.23069E+07	.14667E+01	79	18

Table A1 (continued)

100n*	52n**	Suggested Upper Energy (eV)		Lethargy	239n***	126n****
20	20	45	.22313E+07	.15000E+01	81	19
		46	.21225E+07	.15500E+01	82	20
21	21	47	.20190E+07	.16000E+01	83	21
		48	.19205E+07	.16500E+01	85	22
22	22	49	.18268E+07	.17000E+01	87	23
		50	.17377E+07	.17500E+01	88	24
23	23	51	.16530E+07	.18000E+01	89	25
		52	.15724E+07	.18500E+01	91	26
24	24	53	.14957E+07	.19000E+01	93	27
		54	.14227E+07	.19500E+01	94	28
25	25	55	.13534E+07	.20000E+01	95	29
		56	.12873E+07	.20500E+01	96	30
26	26	57	.12246E+07	.21000E+01	97	31
		58	.11648E+07	.21500E+01	99	32
27	27	59	.11080E+07	.22000E+01	100	33
28	28	60	.10026E+07	.23000E+01	102	34
		61	.96164E+06	.23417E+01	104	35
29	29	62	.90718E+06	.24000E+01	106	36
		63	.86294E+06	.24500E+01	107	37
30	30	64	.82085E+06	.25000E+01	108	38
		65	.78082E+06	.25500E+01	109	39
31	31	66	.74274E+06	.26000E+01	110	40
		67	.70651E+06	.26500E+01	111	41
32	32	68	.67206E+06	.27000E+01	112	42
		69	.63928E+06	.27500E+01	113	43
33	33	70	.60810E+06	.28000E+01	114	44
		71	.57844E+06	.28500E+01	115	45
34	34	72	.55023E+06	.29000E+01	116	46
		73	.52340E+06	.29500E+01	118	47
35	35	74	.49787E+06	.30000E+01	120	48
36	36	75	.45049E+06	.31000E+01	122	49
37		76	.40762E+06	.32000E+01	124	50
		77	.38774E+06	.32500E+01	125	
38		78	.36883E+06	.33000E+01	126	51
39		79	.33373E+06	.34000E+01	128	52
40	37	80	.30197E+06	.35000E+01	131	53
		81	.29850E+06	.35116E+01		54
		82	.29720E+06	.35159E+01		55
		83	.29452E+06	.35250E+01	132	56
		84	.28725E+06	.35500E+01	133	57
41		85	.27324E+06	.36000E+01	135	58
42		86	.24724E+06	.37000E+01	137	59
		87	.23518E+06	.37500E+01	138	
43		88	.22371E+06	.38000E+01	139	60
		89	.21280E+06	.38500E+01	140	61
44	38	90	.20242E+06	.39000E+01	141	62
		91	.19255E+06	.39500E+01	142	63
45		92	.18316E+06	.40000E+01	143	64
		93	.17422E+06	.40500E+01	144	65

Table A1 (continued)

100n*	52n**	Suggested Upper Energy (eV)		Lethargy	239n***	126n****
46		94	.16573E+06	.41000E+01	146	66
		95	.15764E+06	.41500E+01	148	67
47		96	.14996E+06	.42000E+01	149	68
		97	.14264E+06	.42500E+01	150	69
48	39	98	.13569E+06	.43000E+01	151	70
		99	.12907E+06	.43500E+01	152	71
49		100	.12277E+06	.44000E+01	153	72
		101	.11679E+06	.44500E+01	154	73
50		102	.11109E+06	.45000E+01	155	74
		103	.98037E+05	.46250E+01	156	75
51		104	.86517E+05	.47500E+01	157	76
		105	.82500E+05	.47975E+01		77
		106	.79500E+05	.48346E+01		78
		107	.72000E+05	.49337E+01		79
52	40	108	.67379E+05	.50000E+01	159	80
		109	.56562E+05	.51750E+01	162	81
53		110	.52475E+05	.52500E+01	163	82
		111	.46309E+05	.53750E+01	164	83
54		112	.40868E+05	.55000E+01	165	84
		113	.34307E+05	.56750E+01	168	85
55		114	.31828E+05	.57500E+01	169	86
		115	.28500E+05	.58604E+01		87
		116	.27000E+05	.59145E+01		88
		117	.26058E+05	.59500E+01	171	89
56	41	118	.24788E+05	.60000E+01	172	90
		119	.24176E+05	.60250E+01	173	
		120	.23579E+05	.60500E+01	174	91
		121	.21875E+05	.61250E+01	175	92
57		122	.19305E+05	.62500E+01	177	93
58		123	.15034E+05	.65000E+01	179	94
59		124	.11709E+05	.67500E+01	181	95
60	42	125	.91188E+04	.70000E+01	183	96
61		126	.71017E+04	.72500E+01	185	97
62		127	.55308E+04	.75000E+01	187	98
63		128	.43074E+04	.77500E+01	190	99
		129	.37074E+04	.79000E+01	192	100
64	43	130	.33546E+04	.80000E+01	193	101
		131	.30354E+04	.81000E+01	194	102
		132	.27465E+04	.82000E+01	196	103
65		133	.26126E+04	.82500E+01	197	104
		134	.24852E+04	.83000E+01	198	105
		135	.22487E+04	.84000E+01	199	106
66		136	.20347E+04	.85000E+01	200	107
67		137	.15846E+04	.87500E+01	203	108
68	44	138	.12341E+04	.90000E+01	206	109
69		139	.96112E+03	.92500E+01	207	110
70		140	.74852E+03	.95000E+01	208	111
71		141	.58295E+03	.97500E+01	209	

Table A1 (continued)

100n*	52n**	Suggested	Upper Energy (eV)	Lethargy	239n***	126n****
72		142	.45400E+03	.10000E+02	210	112
73		143	.35358E+03	.10250E+02	211	
74		144	.27536E+03	.10500E+02	212	113
75		145	.21445E+03	.10750E+02	213	114
76	46	146	.16702E+03	.11000E+02	214	115
77		147	.13007E+03	.11250E+02	215	
78		148	.10130E+03	.11500E+02	216	116
79		149	.78893E+02	.11750E+02	217	
80	47	150	.61442E+02	.12000E+02	218	117
81		151	.47851E+02	.12250E+02	219	118
82		152	.37267E+02	.12500E+02	220	119
83		153	.29023E+02	.12750E+02	221	
84	48	154	.22603E+02	.13000E+02	222	120
85		155	.17603E+02	.13250E+02	223	
86		156	.13710E+02	.13500E+02	224	
87		157	.10677E+02	.13750E+02	225	121
88	49	158	.83153E+01	.14000E+02	226	
89		159	.64760E+01	.14250E+02	227	
90		160	.50435E+01	.14500E+02	228	122
91		161	.39279E+01	.14750E+02	229	
92	50	162	.30590E+01	.15000E+02	230	
93		163	.23824E+01	.15250E+02	231	123
94		164	.18554E+01	.15500E+02	232	
95		165	.14450E+01	.15750E+02	233	
96	51	166	.11254E+01	.16000E+02	234	124
97		167	.87642E+00	.16250E+02	235	
98		168	.68256E+00	.16500E+02	237	
99		169	.53156E+00	.16750E+02	239	
100	52	170	.41399E+00	.17000E+02		125
		171	.10000E-00			126
		172	.10000E-04			

*100 GAM Group Structure of DLC-2 and DLC-37 (Refs. 9 and 10)
**52 Group Structure of Kriese DLC-28 (Ref. 11)
***239 Group CSEWG Standard of Weisbin and La Bauve (Ref. 12)
****126 Group of the DRRD LMFBR Neutron-Gamma Library (Ref. 8)

Table A2. CTR-PMCSL Gamma-Ray Energy Group Boundaries and Their Relationship to Those Used for Other Libraries

Group Number	Energy (MeV)	21γ*	Bartine**	Straker***
1	14.0	1	1	1
2	12.0	2		
3	10.0	3	2	2
4	8.0	4	3	3
5	7.5	5		
6	7.0	6	4	4
7	6.5	7		
8	6.0	8	5	5
9	5.5	9		
10	5.0	10	6	6
11	4.5	11		
12	4.0	12	7	7
13	3.5	13		8
14	3.0	14	8	9
15	2.5	15	9	10
16	2.0	16	10	11
17	1.66			12
18	1.50	17	11	
19	1.33			13
20	1.0	18	12	14
21	0.80			15
22	0.70		13	
23	0.60			16
24	0.512			
25	0.510			
26	0.45		14	17
27	0.40	19		
28	0.30		15	18
29	0.20	20		
30	0.15		16	19
31	0.10	21	17	20
32	0.075			
33	0.060			21
34	0.045		19	
35	0.030		20	22
36	0.020		21	
	0.010			

*21 Group structure of DLC-28 and DLC-37 (Refs. 11 and 10).
**D. Bartine 21 group structure of DLC-31/(DPL-1/FEWG1) (Ref. 13).
***E. Straker suggested few group version of CSEWG standard (Ref. 14).

APPENDIX B

Codes Used for Retrieving and Manipulating the Data in the CTR Processed Multigroup Cross Section Library and for Running the Packaged Sample Problems.

B.1 Retrieval and Manipulation Codes for the AMPX Interface Form

B.1.1 AIM: AMPX Module for BCD-Binary Conversion

The primary use would be to translate the library from the BCD form distributed by RSIC to the binary form used by the other AMPX modules.

B.1.2 COLGATE: AMPX Module to Copy Selected Portions of AMPX Master Interface

The primary use would be to prepare a subset of the Master by selecting only the nuclides needed for a given problem.

B.1.3 BONAMI: AMPX Module to Perform Bondarenko Resonance Self-Shielding

The primary use would be to access the Bondarenko factor data in the AMPX neutron master interface and perform self-shielding based on the homogeneous option.

B.1.4 CHOX: AMPX Module for Cross Section Interface Manipulation.

CHOX is mainly intended to take a neutron interface, the gamma-ray production interface, and a gamma-ray interaction interface and prepare a coupled neutron, gamma-ray interface.

B.1.5 MALOCS: AMPX Module to Collapse Neutron, Gamma-ray Interaction and Coupled Neutron, Gamma-ray Interfaces

The primary use would be in collapsing the 171 neutron (171,36) coupled, or 36 gamma-ray groups to a smaller number of groups prior to making actual transport calculations.

B.1.6 NITAWL: AMPX Module for Resonance Self-Shielding and Working Library Production

The only function intended for using NITAWL on the CTR library is to convert from the master interface format to a working format for either the XSDRNPM or ANISN radiation transport codes. The form of the data on the CTR library does not allow the utilization of the resonance treatments in NITAWL.

B.1.7 XSDRNPM: AMPX Module with One-Dimensional S_n Capability for Spatial Weighting

The primary use is to perform one-dimensional discrete ordinates calculations, using as input a cross section library in AMPX Working Format

produced by NITAWL. The code has many advantages such as ease of input preparation, calculation of reaction rates, and efficient storage of data which make it an attractive code for performing 1D S_n calculations.

B.1.8 RADE: AMPX Module to Check AMPX Master Cross Section Libraries

The program can be used to check the neutron, gamma-ray production, gamma-ray interaction or coupled interfaces at any stage of the data manipulation procedures.

B.1.9 DIAL: AMPX Module to Produce Selected Edits from AMPX Interfaces

This provides a very flexible capability to produce complete or selected edits of data in as much detail as desired.

B.2 Retrieval and Manipulation Codes for CCC Interface Format

B.2.1 BINX: BCD Interpretation of Neutron Cross Sections

The BINX code is utilized to translate data libraries from BCD to binary or vice versa. The translations are performed on the ISOTXS and BRKOXS files of the CCCC interface system. A selective edit option is available.

B.2.2 LINX: Library interpretation of Neutron Cross Sections

The LINX code is used to merge either two binary ISOTXS files or two binary BRKOXS files into a combined new binary library.

B.2.3 CINX: Collapsed Interpretation of Neutron Cross Sections

CINX will collapse the cross sections on CCCC-III ISOTXS and BRKOXS files to a subset group structure using fine-group fluxes specified by the user. If the user's flux is the same as the flux used to generate the original fine-group library, the collapse will be exact in the sense that the resulting broad group cross sections will be the same as those obtained by running MINX from scratch. The current version is limited to a maximum of 240 groups and a maximum Legendre order of P_3. For output, the user can choose either the CCCC-III ISOTXS and BRKOXS files or the 1DX format.

B.2.4 SPHINX: The object of the SPHINX code is to produce space and energy collapsed neutron cross sections for a given reactor size and composition. This is achieved by interpolation on a Bondarenko type cross section representation for temperature, size, and composition in the reactor. Self-shielding factors are used to account for flux depression in the vicinity of large resonances. For each energy group of each isotope, self-shielding factors are given for fission, capture, total, and elastic scattering. Cross section data in Bondarenko format is given as resonance self-shielding factors from the Bondarenko interface and scattering matrices and infinite dilution cross sections from the ISOTXS interface. The Bondarenko and ISOTXS interface files are generated by the MINX code. SPHINX also has a one-dimensional diffusion theory option which may be used to do an eigenvalue

calculation and collapse cross sections.

3.2.5 CHOXM: The function of CHOXM is to take the self-shielding factors generated by SPHINX, an infinite dilution neutron AMPX interface produced by MINX, and generate a self-shielded neutron AMPX interface for the specific problem of interest which was described in the SPHINX calculation. CHOXM can also combine the neutron interface, a gamma interface, and a photon production interface to produce a neutron-gamma coupled interface. The NITAWL module can then be used to convert from AMPX interface format to the ANISN format.

3.3 Other Programs Used in DCTR Library Sample Problems

3.3.1 AXMIX, GIP: Programs for Cross Section Mixing and Library Arrangement (RSIC Code Package PSR-75). The primary use here is to convert an ANISN format library into group-independent form to reduce the core requirements in a subsequent ANISN run.

3.3.2 ANISN: A One-Dimensional Discrete Ordinates Transport Code with Anisotropic Scattering

This is one of the most widely used 1-D S_n codes and was used in one of the sample cases that were provided for the CTR cross section library.

APPENDIX C

Contents of the AMPX Interface Form of the CTR-PMCSL

The initial version of the CTR-PMCSL is available to participants in the validation effort.

Distribution of this initial version was delayed due to problems encountered in obtaining working versions of various retrieval programs and in processing some materials necessary to calculate several of the models or experiments which were designated at the validation meeting. In addition, we have tried to be sure that the sample problems accompanying the library and retrieval codes could be run in the same manner as prospective users would run them. In so doing, several problems have been encountered and corrected. Hopefully, this experience will result in making the user's task of implementing the PMCSL somewhat easier.

The materials initially available in the CTR-PMCSL are listed in Table C1.

During the validation phase, the designation PDS-41/CTR(A) was used to define the AMPX interface form of the data package. The contents of PDS-41 are summarized in Table C2.

Table C1. Materials Available in the CTR-PMCSL

Nuclide	Comments
H-1	
H-2	No Gamma-Ray Production Data (See Footnote a)
Li-6	
Li-7	
Be-9	
B-10	
B-11	No Gamma-Ray Production Data (See Footnote a)
C-12	
O-16	
N-14	
F	No Gamma-Ray Production Data (See Footnote b)
Na-23	
Mg	
Al-27	
Si	
K	
Ca	No Neutron Data (See Footnote c)
V	No Gamma-Ray Production Data (See Footnote b)
Cr	
Mn-55	
Fe	
Ni	
Cu	No Gamma-Ray Production Data (See Footnote b)
Nb-93	
Mo	
Pb	
U-234	No Gamma-Ray Production Data See Footnote a)
U-235	
U-236	No Gamma-Ray Production Data (See Footnote a)
U-238	
Pu-238	No Gamma-Ray Production Data (See Footnote a)
Pu-239	
Pu-240	
Pu-241	No Gamma-Ray Production Data (See Footnote a)
Pu-242	No Gamma-Ray Production Data (See Footnote a)
Am-241	No Gamma-Ray Production Data (See Footnote a)

a. Gamma-Ray Production Data Not Available on ENDF/B-IV.
b. Gamma-Ray Production Data Available on ENDF/B-IV, but not yet in Data Package.
c. Neutron Data Processing Awaiting MINX Update.

Table C2. Contents of PDS-41/CTR(A): The AMPX Interface Version of the CTR-PMCSL

Library Elements	Records
171 Neutron Group AMPX Interface for 35 Nuclides	227,818
171 Neutron, 36 Gamma-Ray Group Production AMPX Interface for 25 Nuclides	13,899
36 Gamma-Ray Group AMPX Interface for 38 Nuclides	15,934
AMPX Modules for Retrieving and Manipulating the Library	
AIM (BCD to Binary Conversion)	2,057
COLGATE (Selective Retrieving)	964
BONAMI (Self-Shielding Factor Interpolation)	1,971
NITAWL (Working Library Production)	5,113
CHOX (Neutron and Gamma-Ray Coupling)	1,525
RADE (Consistency Checking)	2,003
DIAL (Selective Editing)	1,131
MALOCS (Group Collapsing)	1,717
XSDRNPM (Transport Calculation)	6,953
ALOCAT (for XSDRNPM Standard Blanket Run)	5
Other Codes for Use With the Library	
GIP (ANISN Group Independent Tape Creation)	1,672
AXMIX (ANISN Library Tape Creation)	2,564
LOC (Assembly Language for AXMIX)	7
IDATE (Assembly Language for AXMIX)	16
ANISN (Transport Calculation)	4,026
CDC Versions of AMPX Modules	
NITAWL	4,094
XSDRNPM	6,720
JCL and Card Input for Sample Problems	723
Printed Output from Sample Problems	24,294

APPENDIX D

Contents of the CCCC-AMPX Interface Form of the CTR-PMCSL

Participants in the validation effort may also obtain the CCCC-AMPX form of the CTR-PMCSL.

The CCCC-AMPX interface form of the data packages was designated as PDS-42/CTR(4CA). At the time of the general release, the designations will be changed to the DLC type. The contents of PDS-42 are summarized in Table D1. It should be noted that the SPHINX code may be used for performing the interpolation on self-shielding factors and performing diffusion theory calculations and group-collapsing. The version of SPHINX included in this package does not perform a transport theory calculation. SPHINX does produce a CCCC ISOTXS file as its output which could be used as input to a transport code cross section processor which would convert the ISOTXS file into a working library. However, this approach has not been tested locally. In this package, the linking with a transport code is accomplished in a slightly different manner by using problem-dependent self-shielding factors from SPHINX. By combining these with the AMPX interfaces and utilizing the CHOX-M and NITAWL programs, the user can obtain self-shielded neutron or coupled neutron, gamma-ray cross sections which can then be used in a transport theory calculation via ANISN.

At the present time a sample problem using the CCCC-AMPX form is being prepared for distribution.

Table D1. Contents of PDS-42/CTR(4CA): The CCCC-AMPX Interface Version of the CTR-PMCSL

Library Element	Records
171 Neutron Group ISOTXS Interface for 35 Nuclides	244,000
(4 tapes)	243,600
	243,600
	53,193
171 Neutron Group BRKOXS Interface for 35 Nuclides	81,808
171 Neutron Group AMPX Interface for 35 Nuclides	227,818
171 Neutron 36 Gamma-Ray Group Production AMPX Interface for 25 Nuclides	13,899
36 Gamma-Ray Group AMPX Interface for 38 Nuclides	15,623
CCCC Codes for Retrieving and Manipulating the Library	
BINX (BCD to Binary Conversion)	731
LINX (Library Merging)	548
CINX (Group Collapsing)	1,418
SPHINX (Self-Shielding Factor Interpolation)	15,934
DEFILE (Assembly Language for SPHINX)	156
Other Codes for Use with the Library	
CHOX/M (Coupling SPHINX with AMPX Interfaces)	599
NITAWL (From RSIC Package PSR-63)*	5,159
AXMIX (ANISN Library Tape Creation)	2,564
LOC (Assembly Language for AXMIX)	7
IDATE (Assembly Language for AXMIX)	16
GIP (ANISN Group Independent Tape Creation)	1,672
ANISN (Transport Calculation)	4,026
CDC Versions of AMPX Modules	
NITAWL	4,094
XSDRNPM	6,720
JCL and Card Input for Sample Problem	(Not ready)
Printed Output from Sample Problem	(Not ready)

*This version of NITAWL uses a slightly different method of normalization between transfer matrices and smooth cross sections.

SAMPLE PROBLEMS
FOR
DLC-41/VITAMIN-C

PRESENTED AT THE

RSIC WORKSHOP ON MULTIGROUP CROSS-SECTION HANDLING CODES

BY

R. W. ROUSSIN AND D. B. SIMPSON

March 15, 1978

Oak Ridge, Tennessee

RADIATION SHIELDING INFORMATION CENTER
OAK RIDGE NATIONAL LABORATORY

ACKNOWLEDGMENT

Many people were involved in various aspects of the preparation of the sample problems for this Workshop. John White, R. Q. Wright, and Dave Simpson were involved in the setup and debugging of runs, particularly for problems involving CCCC data and codes. N. M. Greene, L. M. Petrie, W. E. Ford, III, and B. R. Diggs were very helpful in setting up and debugging the problems involving AMPX data and modules.

Juanita Wright, Henrietta Hendrickson, Dave Simpson, and Hemma Comolander of the RSIC staff assisted in the packaging of the libraries and codes. Henrietta helped prepare the manuscript, along with assistance from Nancy Hatmaker and Ann Gustin. Eddie Bryant and Mildred Landay typed the manuscript.

The help of all these people is gratefully acknowledged.

R. W. Roussin

CONTENTS

ACKNOWLEDGMENT. iii

INTRODUCTION 1
CONTENTS OF THE DLC-41B/VITAMIN-C PACKAGE 2
SHORTHAND NOTATION USED TO IDENTIFY CROSS-SECTION LIBRARIES 3
DESCRIPTION OF SAMPLE PROBLEMS. 4
OVERALL CALCULATIONAL SCHEME FOR THE ZPR-6/7 PROBLEM. 5
JOBS USED TO SOLVE THE ZPR-6/7 SAMPLE PROBLEM 6
OVERALL CALCULATIONAL SCHEME FOR THE CTR STANDARD BLANKET PROBLEM 7
JOBS USED TO SOLVE THE CTR STANDARD BLANKET SAMPLE PROBLEM 8
RUNNING TIME, REGION, AND I/Ø REQUIRED FOR BOTH PROBLEMS. 9

REFERENCES 10

APPENDIX A JCL, INPUT AND OUTPUT FOR THE ZPR-6/7 PROBLEM. 11

APPENDIX B JCL, INPUT AND OUTPUT FOR THE CTR STANDARD BLANKET PROBLEM 46

00035

INTRODUCTION

The RSIC Workshop on Multigroup Cross-Section Handling Codes is being held to acquaint the user community with the flexibility offered by a new class of data libraries now available from RSIC[1]. Data libraries in AMPX[2] Master Library and CCCC[3] Interface formats allow the user to perform self-shielding and group collapsing to form a problem dependent library for his own use.

This flexibility has a price. The user must deal with large libraries requiring several tapes and must run several handling codes in order to derive a library for a particular type of problem.

In order to help the user develop a working knowledge of such a library, some sample problems will be demonstrated. The demonstration will take the form of a statement of the problem, a discussion of one or more methods of solution, and a description of the input data required for and the output resulting from the execution of the sample problem.

The sample problems are designed to be executed using codes from either the PSR-63/AMPX-II package or from the PSR-117/MARS package. The latter contains only the AMPX modules which manipulate multigroup data in AMPX master library format. In addition to the AMPX modules, PSR-117 also contains codes for manipulating data in CCCC interface format.

Contents of the DLC-41B/VITAMIN-C Package

The DLC-41B/VITAMIN-C 171-neutron, 36-gamma-ray group cross-section library in AMPX master library format requires 4 tapes for transmittal. Tape contents are as follows:

Tape	Contents	No. Records
1	171n BCD AMPX Master (36 Materials)	243,346
2	171n BCD AMPX Master (25 Materials)	113,253
3	171n, 36g BCD AMPX LAPHNGAS Library	24,616
	36g BCD AMPX SMUG Library	16,523
4	JCL, Input, and Output for Sample Problems	23,955

Materials Available in DLC-41B

Neutron	γ-Prod.	Neutron	γ-Prod.	Neutron	γ-Prod.
H-1		K		Eu-153	
H-2	No	Ca		Ta-181	
H-3	No	Ti		W-182	
He-3	No	V		W-183	
He-4	No	Cr		W-184	
Li-6		Mn-55		W-186	
Li-7		Fe		Pb	
Be-9		Co-59		Th-232	No
B-10		Ni		U-233	No
B-11	No	Cu		U-234	No
C-12		Zr		U-235	
N-14		Zirc-2	No	U-236	No
O-16		Nb-93		U-238	
F		Mo		Np-237	No
Na-23		Ag-107	No	Pu-238	No
Mg		Ag-109	No	Pu-239	
Al-27		Cd	No	Pu-240	
Si		Sn		Pu-241	No
P-31		Ba		Pu-242	No
S-32		Eu-151		Am-241	No
Cl					

(M) - COUPLED AMPX MASTER

(M_N) - AMPX MASTER WITH NEUTRONS ONLY

(M_{NG}) - AMPX MASTER WITH GAMMA-PRODUCTION ONLY (LAPHNGAS)

(M_G) - AMPX MASTER WITH GAMMAS ONLY (SMUG)

(W) - AMPX WORKING LIBRARY

(I) - CCCC ISOTXS FILE

(B) - CCCC BRKOXS FILE

(A) - ANISN LIBRARY

(G) - GROUP INDEPENDENT LIBRARY

Fig. 1. Shorthand Notation Used to Identify Various Cross-Section Libraries.

Description of the DLC-41 Sample Problems

ZPR-6/7 Infinite Medium

This calculation involves one of the fast reactor data testing benchmarks of the Cross-Section Evaluation Working Group[4] (CSEWG) involving a model of ZPR-6 Assembly 7 - A plutonium oxide fueled fast critical assembly. The problem demonstrates the production of self-shielded cross sections appropriate to the core composition of ZPR-6/7 and the subsequent use of the cross sections in a discrete ordinates transport code (using the infinite homogeneous medium option). The calculation starts with a BCD to binary conversion of the 171n library using AIM. Then the 12 nuclides comprising the core composition are selected using AJAX. These are processed by BONAMI to perform interpolation on Bondarenko factors using the homogeneous medium option for the core composition of ZPR-6/7. This results in an AMPX Master Interface with self-shielded cross sections. The NITAWL module is used to convert this into an AMPX working library and an ANISN binary library. The AMPX working library is used in XSDRNPM to perform a k-calculation for ZPR-6/7 using the infinite homogeneous medium option. The same calculation is repeated with ANISN after first processing the ANISN binary tape into group-independent form using GIP.

CTR Standard Blanket Model

This calculation is for a one dimensional, multigroup, cylindrical model of a fusion reactor blanket. This model has been used as a reference calculational benchmark in the fusion neutronics community[5]. The first steps in the problem involve AIM runs to convert the 171n AMPX interface, the (171n,36g) LAPHNGAS library, and the 36g SMUG library from BCD to binary form. The CHOX module is used to select the 4 materials used in the model and combine the data on three AMPX interfaces mentioned above into a single "coupled" AMPX Master Library Interface. The MALOCS code is used to collapse the (171n,36g) AMPX Master to a (100n,21g) AMPX master. NITAWL is then used to make an AMPX working library and an ANISN binary tape. Two additional reaction cross sections are pulled from the (100n,21g) AMPX master by NITAWL and are carried on both the working library and the ANISN library for subsequent calculation of reaction rates (in this case, tritium production) using fluxes computed in discrete ordinates codes. The one-dimensional, fixed source calculation is performed using both XSDRNPM and GIP-ANISN.

Configuration of the CTR Standard Blanket

Distances in cm	0	150	200	200.5	203.5	204		264	294	300
Origin →	Plasma	Vacuum	Nb	94% Li 6% Nb	Nb		94% Li 6% Nb	C	94% Li 6% Nb	
Zone	1	2	3	4	5	6	7	8	9	10

THE ZPR-6/7 SAMPLE PROBLEM FOR DLC-41/VITAMIN-C DEMONSTRATES THE USE OF AMPX MODULES TO OBTAIN SELF-SHIELDED CROSS SECTIONS USING BONDARENKO FACTORS.

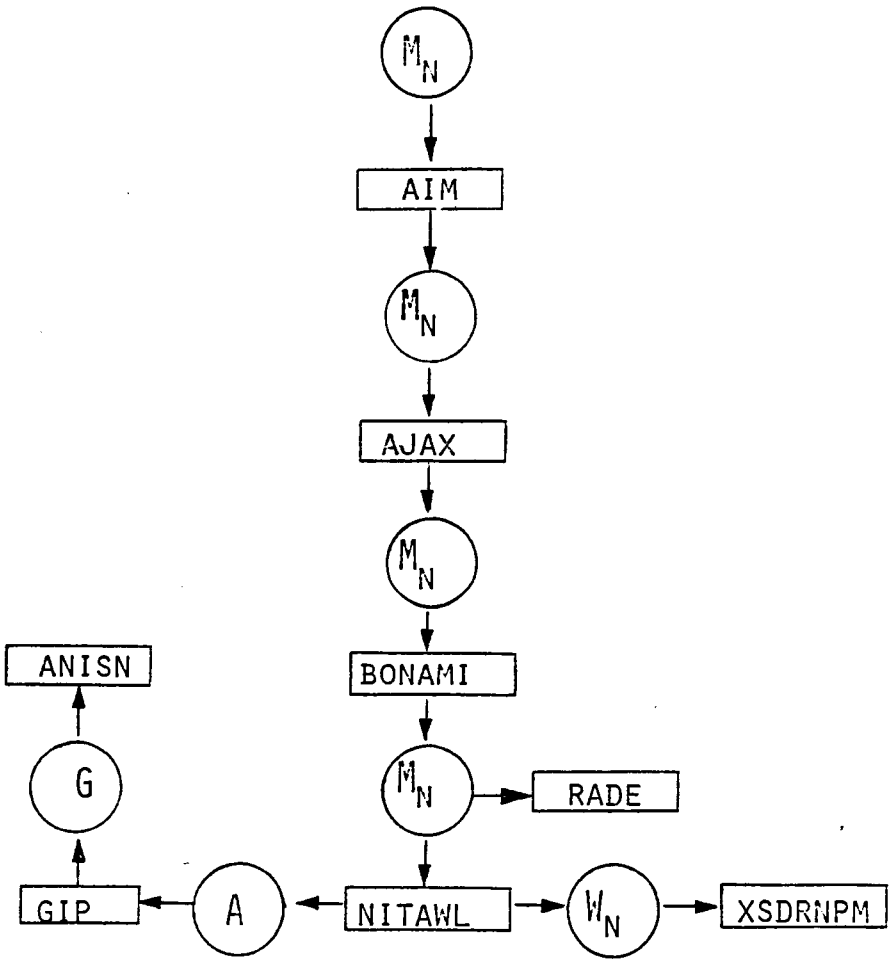

Fig. 2. Overall Calculational Scheme for the ZPR-6/7 Problem.

THE DLC-41 ZPR-6/7 SAMPLE PROBLEM IS DIVIDED INTO TWO JOBS. AN ALTERNATE PATH IS ALSO DEMONSTRATED.

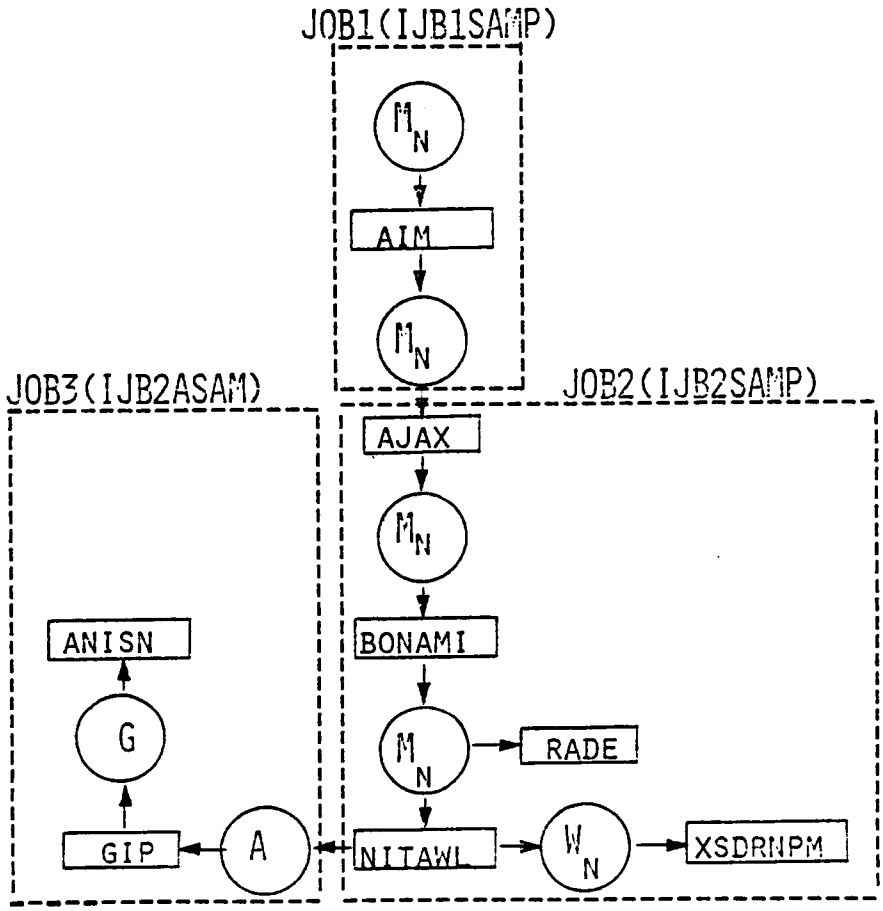

Fig. 3. Jobs Used to Solve the ZPR-6/7 Problem.

THE CTR STANDARD BLANKET SAMPLE PROBLEM FOR DLC-41/VITAMIN-C DEMONSTRATES THE USE OF AMPX MODULES TO PRODUCE A COUPLED CROSS-SECTION LIBRARY FOR TRANSPORT CALCULATIONS.

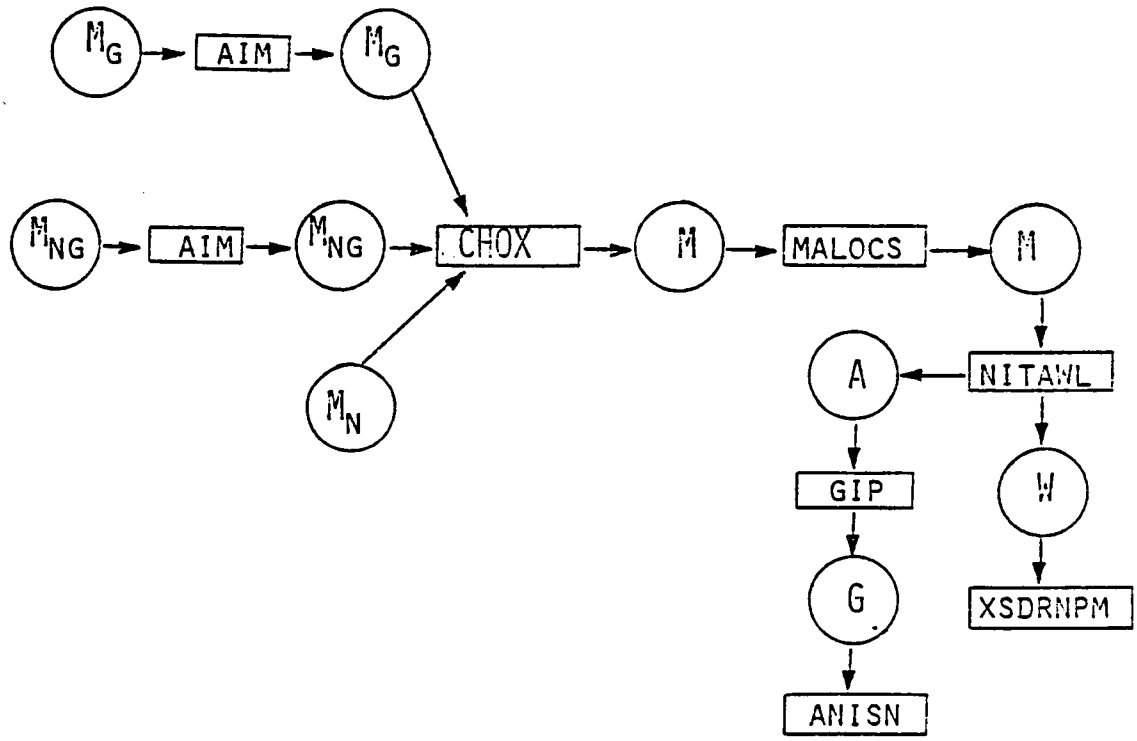

00042

Fig. 4. Overall Calculational Scheme for CTR Standard Blanket Problem.

THE DLC-41 STANDARD BLANKET SAMPLE PROBLEM IS DIVIDED INTO THREE JOBS WITH AN EXTRA JOB INCLUDED TO DEMONSTRATE AN ALTERNATE PATH.

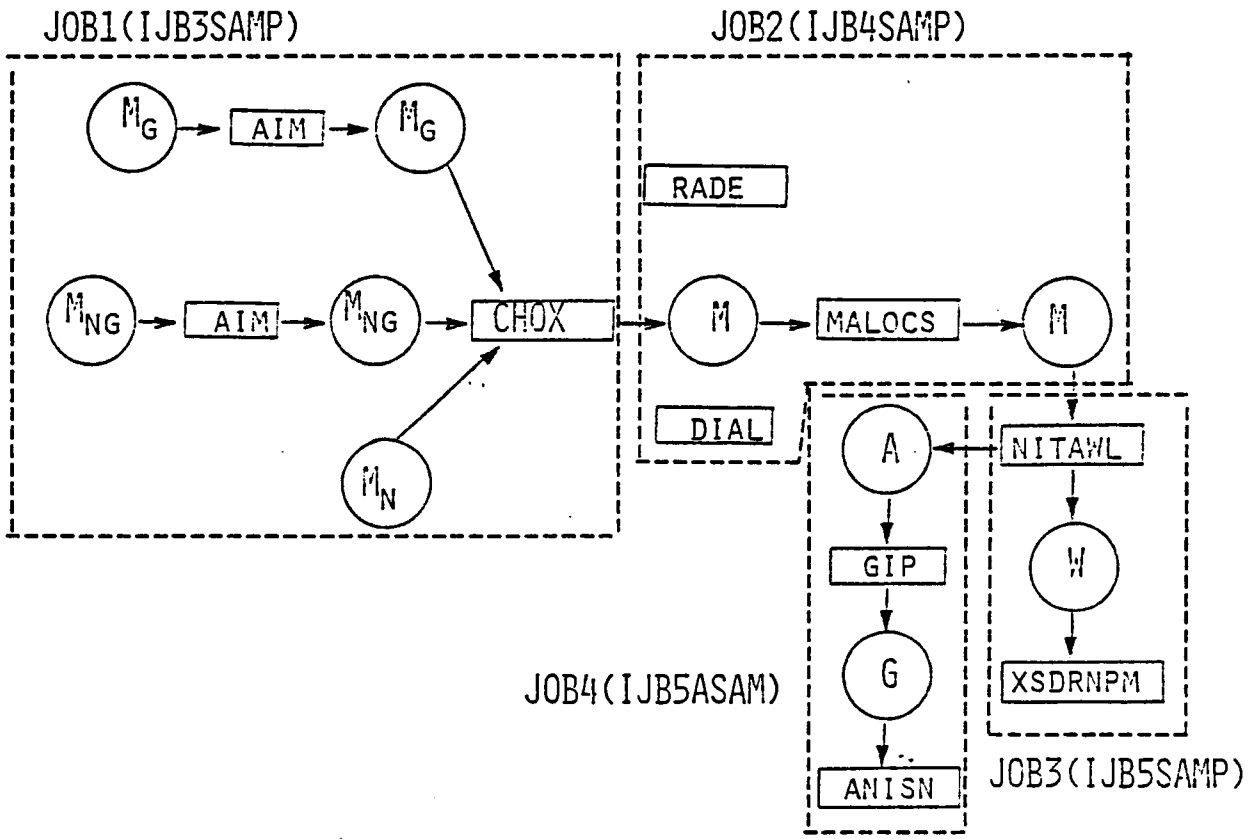

Fig. 5. Jobs Used to Solve the CTR Standard Blanket Problem.

00043

Table 1. Running Times, Region and I/Ø Requirements for Solving the ZPR-6/7 Sample Problems in DLC-41/VITAMIN-C.

		TOTAL			INDIVIDUAL			
ZPR-6/7	Name	MAX. REGION	IØ*	TIME	Code	REGION	IØ*	TIME
JOB 1	IJB1SAMP	270K	24	16.53m	AIM	270K	24	16.53m
JOB 2	IJB2SAMP	430K	52	5.41m	AJAX	270K	7	8s
					BONAMI	400K	11	1.45m
					RADE	270K	5	43s
					NITAWL	430K	17	1.2m
					XSDRNPM	400K	12	1.9m
JOB 3	IJB2ASAM	272K	15	1.73m	GIP	268K	10	29s
					ANISN	272K	5	1.25m

Table 2. Running Times, Region, and I/Ø Requirements for Solving the CTR Standard Blanket Sample Problem in DLC-41/VITAMIN-C.

		TOTAL			INDIVIDUAL			
CTR STD. BLANKET	Name	MAX. REGION	I/Ø*	TIME	Code	REGION	I/Ø*	TIME
JOB 1	IJB3SAMP	270K	20	3.42m	AIM	270K	5	1.76m
					AIM	270K	3	1.23m
					CHOX	270K	12	25s
JOB 2	IJB4SAMP	310K	11	1.01m	RADE	300K	5	28s
					DIAL	268K	2	10s
					MALOCS	310K	4	23s
JOB 3	IJB5SAMP	420K	18	3.94m	NITAWL	410K	7	54s
					XSDRNPM	420K	11	3.03m
JOB 4	IJB5ASAM	308K	16	4.23m	GIP	236K	7	26s
					ANISN	308K	9	3.80m

*In Thousands

REFERENCES

1. Radiation Shielding Information Center Newsletter No. 146, February 1977.

2. N. M. Greene, et al., "AMPX: A Modular Code System for Generating Coupled Multigroup Neutron-Gamma Libraries from ENDF/B," ORNL/TM-3706 (March 1976).

3. B. M. Carmichael, "Standard Interface Files and Procedures for Reactor Physics Codes, Version III," LA-5486-MS (February 1974).

4. "Cross Section Evaluation Working Group Benchmark Specifications," BNL 19302 (ENDF-202) (November 1974).

5. D. Steiner, "Analysis of a Bench-Mark Calculation of Tritium in a Fusion Reactor Blanket: The United States Contribution," ORNL-TM-4177 (April 1973).

00045

APPENDIX A

JCL, Input Data, and Output from the ZPR-6/7 Sample Problem in DLC-41/VITAMIN-C.

Contents | Page

Input for JOB 1 (AIM) 12
Output from JOB 1 (AIM) 13

Input for JOB 2 (AJAX, BONAMI) 14
(RADE, NITAWL) 15
(XSDRNPM) 16
Output from JOB 2 (AJAX) 17
(BONAMI) 18
(RADE) 27
(NITAWL) 32
(XSDRNPM) 35

Input for JOB 3(GIP, ANISN) 41
Output from JOB 3 (GIP) 42
(ANISN) 44

DLC-41: JCL AND INPUT DATA FOR JOB1 OF THE ZPR-6/7 SAMPLE PROBLEM

```
//IJB1SAMP JCB (15334),'J B WRIGHT 6025'
//*CLASS CPU91=20M,IO=26,REGION=270K,SPECIAL=TAPE
//AIM EXEC FORTHCLG,REGION.GO=270K,LIB=FORT
//FORT.SYSIN DD UNIT=TAPE9,DISP=(OLD,PASS),
// VOL=SER=RR0001,LABEL=(3,NL),
// DCB=(RECFM=FB,LRECL=80,BLKSIZE=3200)
//LKED.SLASM DD UNIT=3330,VOL=SER=NE3330,DSN=RWR.AMPX.SLASM.R8477,
// DISP=SHR,DCB=(RECFM=FB,LRECL=80,BLKSIZE=3200)
//LKED.SLFTN DD UNIT=3330,VOL=SER=NE3330,DSN=RWR.AMPX.SLFTN.R8477,
// DISP=SHR,DCB=(RECFM=FB,LRECL=80,BLKSIZE=3200)
//LKED.SYSIN DD *
 INCLUDE SLASM
 INCLUDE SLFTN
//GO.FT06F001 DD SYSOUT=A,DCB=(RECFM=FBA,LRECL=133,BLKSIZE=3458)
//GO.FT17F001 DD UNIT=SYSDA,SPACE=(TRK,(900,50))
//GO.FT72F001 DD UNIT=TAPE9,DISP=(NEW,PASS),
// VOL=SER=X1428,
// LABEL=(1,NL),
// DCB=(RECFM=VBS,LRECL=X,BLKSIZE=3520)
//GO.FT73F001 DD UNIT=TAPE9,DISP=(OLD,KEEP),
// VOL=SER=A21576,LABEL=(1,SL),
// DSN=X.IJBDE941.LIB171N.DIC41B.TAPE1,
// DCB=(RECFM=FB,LRECL=80,BLKSIZE=3200)
//GO.FT05F001 DD *
0$$ 72 73 1$$ 1 2$$ 0 -1 1 E T
```

AIM (CONVERT 171N AMPX LIBRARY (BCD-TO-BINARY)

AIM SOURCE PROGRAM

AMPX SUBROUTINE LIBRARY OBJECT DECKS

171N BINARY AMPX LIBRARY

171N BCD AMPX LIBRARY

00417

DLC-41: Output From JOB1 of the ZPR-6/7 Sample Problem

```
0$ ARRAY      2 ENTRIES READ
1$ ARRAY      1 ENTRIES READ
2$ ARRAY      4 ENTRIES READ
0T
```

AIM (convert 171n AMPX Library BCD-to-Binary)

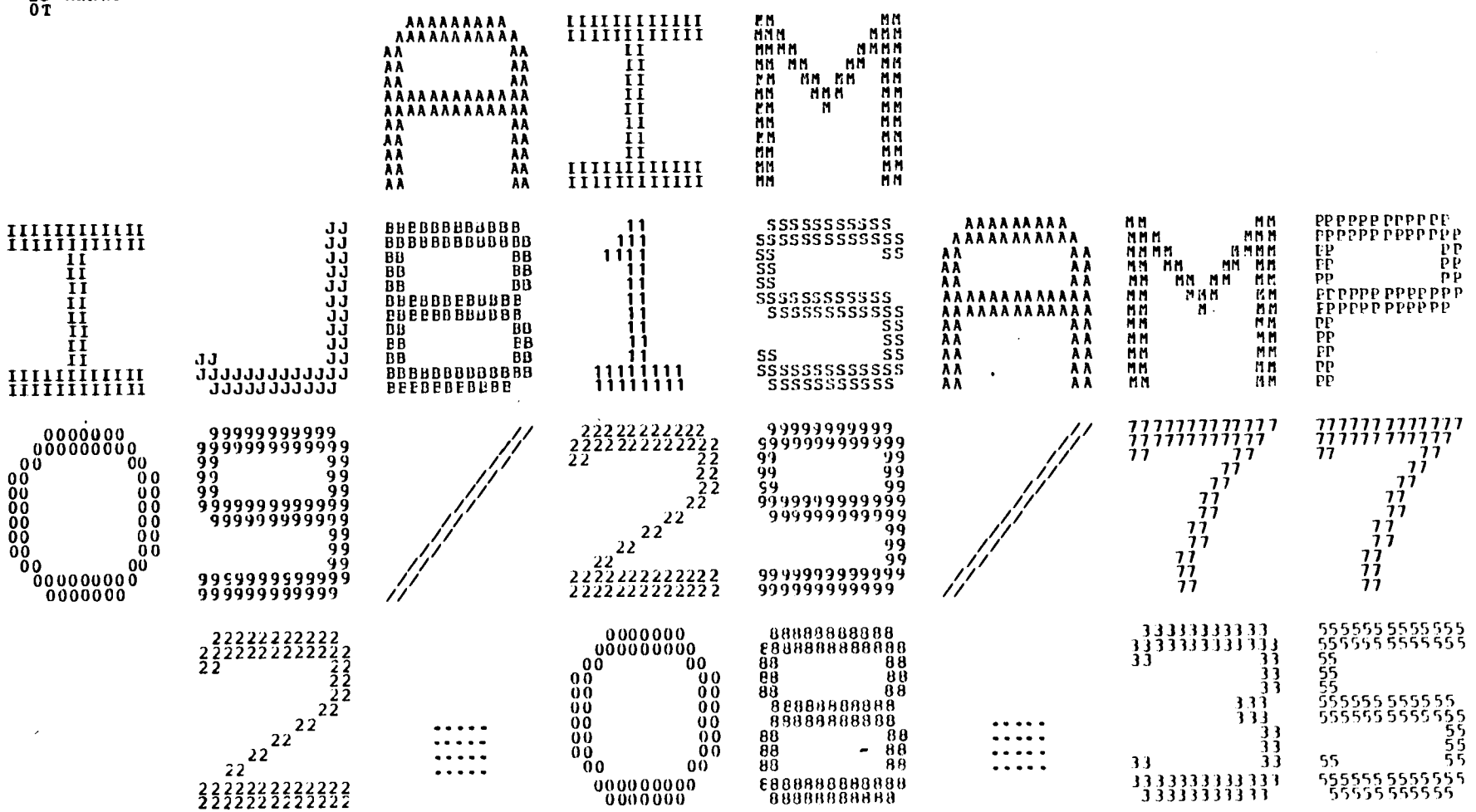

```
COMMENCE BCD-TO-BINARY CONVERSION FOR


THE BCD-TO-BINARY CONVERSION IS COMPLETED
```

DLC-41: JCL AND INPUT DATA FOR JOB2 OF THE ZPR-6/7 SAMPLE PROBLEM

AJAX (SELECT 12 NUCLIDES FOR ZPR-6/7 CALCULATION)

AJAX SOURCE PROGRAM

171N AMPX LIBRARY

171N AMPX LIBRARY (12 MATS.)

```
//IJB2SAMP JOB (15334),'J B WRIGHT 6025'
//*CLASS CPU91=08M,IC=52,REGION=430K,SPECIAL=TAPE
//AJAX EXEC FORTHCLG,REGION.GO=400K,LIB=FORT
//SYSPRINT DD DUMMY
//FORT.SYSIN DD UNIT=TAPE9,DISP=(OLD,PASS),
// VOL=SER=RR0001,LABEL=(4,NL),
// DCB=(RECFM=FB,LRECL=80,BLKSIZE=3200)
//LKED.SLASM DD UNIT=3330,VOL=SER=NE3330,DSN=RWR.AMPX.SLASM.R8477,
// DISP=SHR,DCB=(RECFM=FB,LRECL=80,BLKSIZE=3200)
//LKED.SLFTN DD UNIT=3330,VOL=SER=NE3330,DSN=RWR.AMPX.SLFTN.R8477,
// DISP=SHR,DCB=(RECFM=FB,LRECL=80,BLKSIZE=3200)
//LKED.SYSIN DD *
 INCLUDE SLASM
 INCLUDE SLFTN
//GO.FT06F001 DD SYSOUT=A,DCB=(RECFM=FBA,LRECL=133,BLKSIZE=3458)
//GO.FT15F001 DD UNIT=SYSDA,SPACE=(1693,(200,20))
//GO.FT16F001 DD UNIT=SYSDA,SPACE=(1693,(40,20))
//GO.FT18F001 DD UNIT=SYSDA,SPACE=(TRK,(900,50)),
// DCB=(RECFM=VBS,LRECL=X,BLKSIZE=3520,BUFL=4000)
//GO.FT19F001 DD UNIT=SYSDA,SPACE=(1693,(40,20))
//GO.FT72F001 DD UNIT=TAPE9,DISP=(OLD,PASS),
// VOL=SER=X1428,
// LABEL=(1,NL),
// DCB=(RECFM=VBS,LRECL=X,BLKSIZE=3520)
//GO.FT78F001 DD UNIT=SYSDA,
// DCB=(RECFM=VBS,LRECL=X,BLKSIZE=3520,BUFL=4000),
//  SPACE=(3520,(2000,50)),DSN=&&AJAX1,DISP=(NEW,PASS)
//GO.FT05F001 DD *
0$$ 78 72 1$$ 1 T
2$$ 72 12 7
 3$$ 1264 1265 1266 1261 9262 1287 1156 1276 1192 1191 1190 1197
T
```

BONAMI (PERFORMS SELF-SHIELDING FOR NUCLIDES IN ZPR-6/7 HOMOGENEOUS MODEL)

BONAMI SOURCE PROGRAM

171N AMPX LIBRARY (12 MATS.) FROM AJAX

171N AMPX LIBRARY (SELF-SHIELDED)

```
//BONAMI EXEC FORTHCLG,REGION.GO=400K,LIB=FORT
//SYSPRINT DD DUMMY
//FORT.SYSIN DD UNIT=TAPE9,DISP=(OLD,PASS),
// VOL=SER=RR0001,LABEL=(7,NL),
// DCB=(RECFM=FB,LRECL=80,BLKSIZE=3200)
//LKED.SLASM DD UNIT=3330,VOL=SER=NE3330,DSN=RWR.AMPX.SLASM.R8477,
// DISP=SHR,DCB=(RECFM=FB,LRECL=80,BLKSIZE=3200)
//LKED.SLFTN DD UNIT=3330,VOL=SER=NE3330,DSN=RWR.AMPX.SLFTN.R8477,
// DISP=SHR,DCB=(RECFM=FB,LRECL=80,BLKSIZE=3200)
//LKED.SYSIN DD *
 INCLUDE SLASM
 INCLUDE SLFTN
//GO.FT06F001 DD SYSOUT=A,DCB=(RECFM=FBA,LRECL=133,BLKSIZE=3458)
//GO.FT78F001 DD UNIT=SYSDA,
// DCB=(RECFM=VBS,LRECL=X,BLKSIZE=3520,BUFL=4000),
//  SPACE=(3520,(2000,50)),DSN=&&AJAX1,DISP=(OLD,DELETE)
//GO.FT01F001 DD UNIT=SYSDA,
// DCB=(RECFM=VBS,LRECL=X,BLKSIZE=3520,BUFL=4000),
//  SPACE=(3520,(2000,50)),DSN=&&BONAM,DISP=(NEW,PASS)
//GO.FT18F001 DD UNIT=SYSDA,SPACE=(TRK,(900,50)),
// DCB=(RECFM=VBS,LRECL=X,BLKSIZE=3520,BUFL=4000)
//GO.FT19F001 DD UNIT=SYSDA,SPACE=(TRK,(900,50)),
// DCB=(RECFM=VBS,LRECL=X,BLKSIZE=3520,BUFL=4000)
//GO.FT05F001 DD *
0$$ 78 0 18 1
1$$ 0 1 12 1 1 0 T
3$$ 12R1
 4$$ 1264 1265 1266 1261 9262 1287 1156 1276 1192 1191 1190 1197
 5** 8.8672-4 1.177-4 1.33-5 1.26-5 5.777-3 2.357-4 9.2904-3 1.398-2
 1.297-2 2.709-3 1.24-3 2.12-4
6$$ 1 7** 88.16 8** 300.
10$$ 1264 1265 1266 1261 9262 1287 1156 1276 1192 1191 1190 1197
11$$ 0 T
```

COMPOSITIONS ASSUMED FOR ZPR-6/7 MODEL (NOTE: ONLY 12 NUCLIDES USED)

RADE (TEST THE 171N AMPX SELF-SHIELDED LIBRARY)

```
//RADE EXEC FORTHCLG,REGION.GO=270K,LIB=FORT
//SYSPRINT DD DUMMY
//FORT.SYSIN DD UNIT=TAPE9,DISP=(OLD,PASS),
// VOL=SER=RR0001,LABEL=(17,NL),
// DCB=(RECFM=FB,LRECL=80,BLKSIZE=3200)
//LKED.SLASM DD UNIT=3330,VOL=SER=NE3330,DSN=RWR.AMPX.SLASM.R8477,
// DISP=SHR,DCB=(RECFM=FB,LRECL=80,BLKSIZE=3200)
//LKED.SLFTN DD UNIT=3330,VOL=SER=NE3330,DSN=RWR.AMPX.SLFTN.R8477,
// DISP=SHR,DCB=(RECFM=FB,LRECL=80,BLKSIZE=3200)
//LKED.SYSIN DD *
 INCLUDE SLASM
 INCLUDE SLFTN
//GO.FT06F001 DD SYSOUT=A,DCB=(RECFM=FBA,LRECL=133,BLKSIZE=3458)
//GO.FT18F001 DD UNIT=SYSDA,SPACE=(TRK,(900,50)),
// DCB=(RECFM=VBS,LRECL=X,BLKSIZE=3520,BUFL=4000)
//GO.FT19F001 DD UNIT=SYSDA,SPACE=(TRK,(900,50)),
// DCB=(RECFM=VBS,LRECL=X,BLKSIZE=3520,BUFL=4000)
//GO.FT01F001 DD UNIT=SYSDA,
// DCB=(RECFM=VBS,LRECL=X,BLKSIZE=3520,BUFL=4000),
//   SPACE=(3520,(2000,50)),DSN=&&BONAM,DISP=(OLD,PASS)
//GO.FT05F001 DD *
1$$ 1 E 2$$ A2 10 E 1
```

RADE SOURCE PROGRAM

171N AMPX LIBRARY (SELF-SHIELDED) FROM BONAMI

CHECKING TOLERANCE 0.01%

NITAWL (PRODUCE AN AMPX WORKING LIBRARY AND AN ANISN BINARY LIBRARY)

```
//NITAWL EXEC FORTHCLG,PARM.LKED='LET,OVLY',REGION.GO=430K,LIB=FORT
//SYSPRINT DD DUMMY
//FORT.SYSIN DD UNIT=TAPE9,DISP=(OLD,PASS),
// VOL=SER=RR0001,LABEL=(16,NL),
// DCB=(RECFM=FB,LRECL=80,BLKSIZE=3200)
//LKED.SLASM DD UNIT=3330,VOL=SER=NE3330,DSN=RWR.AMPX.SLASM.R8477,
// DISP=SHR,DCB=(RECFM=FB,LRECL=80,BLKSIZE=3200)
//LKED.SLFTN DD UNIT=3330,VOL=SER=NE3330,DSN=RWR.AMPX.SLFTN.R8477,
// DISP=SHR,DCB=(RECFM=FB,LRECL=80,BLKSIZE=3200)
//LKED.SYSIN DD *
      ENTRY MAIN
 INCLUDE SLASM
 INCLUDE SLFTN
  OVERLAY ONE
    INSERT FIDAS,FFREAD,ISRCH,FHIPR,LETTER,MESAGE
   OVERLAY ONE
    INSERT RECTRY,COPY,JGET
   OVERLAY ONE
    INSERT TAPERD,XTITLE,WOT
   OVERLAY TWO
    INSERT ANIS,SNST,A1DX,CST,FFPUN,RLTFX,WRTP
   OVERLAY TWO
    INSERT MSTPRD
   OVERLAY THREE
    INSERT BERT,BART,SUMS,PICKMT,FOLD,IO4,SUMX
   OVERLAY THREE
    INSERT MIXR,JLL1,CMPS,MWLIST,PRT1D,CRRCT,TERP1D,RNORM
   OVERLAY THREE
    INSERT RSNANC
   OVERLAY FOUR
    INSERT GRID,RESOI,NEWSLB,NEWCYL,SAMPS,SEMPS,SOMPS,VOGAM,TRAPZ
   OVERLAY FOUR
    INSERT UNRES,GINT,FJ,FLAG,INTER,SIMPS
//GO.FT06F001 DD SYSOUT=A,DCB=(RECFM=FBA,LRECL=133,BLKSIZE=3458)
//GO.FT01F001 DD UNIT=SYSDA,
// DCB=(RECFM=VBS,LRECL=X,BLKSIZE=3520,BUFL=4000),
//   SPACE=(3520,(2000,50)),DSN=&&BONAM,DISP=(OLD,DELETE)
//GO.FT03F001 DD UNIT=TAPE9,DISP=(NEW,PASS),
// VOL=SER=X15608,
// LABEL=(1,NL),
// DCB=(RECFM=VBS,LRECL=X,BLKSIZE=3520)
//GO.FT04F001 DD UNIT=SYSDA,
// DCB=(RECFM=VBS,LRECL=X,BLKSIZE=3520,BUFL=4000),
//   SPACE=(3520,(2000,50)),DSN=&&NITAW,DISP=(NEW,PASS)
//GO.FT09F001 DD UNIT=SYSDA,SPACE=(3520,(900,100)),
// DCB=(RECFM=VBS,LRECL=X,BLKSIZE=3520,BUFL=4000)
//GO.FT18F001 DD UNIT=SYSDA,SPACE=(TRK,(900,50)),
// DCB=(RECFM=VBS,LRECL=X,BLKSIZE=3520,BUFL=4000)
//GO.FT19F001 DD UNIT=SYSDA,SPACE=(TRK,(900,50)),
// DCB=(RECFM=VBS,LRECL=X,BLKSIZE=3520,BUFL=4000)
//GO.FT05F001 DD *
0$$ 1 A9 3 E 1$$ A2 12 A5 2 A11 -1 E T
 2$$ 1264 1265 1266 1261 9262 1287 1156 1276 1192 1191 1190 1197
T
```

NITAWL SOURCE PROGRAM

NITAWL OVERLAY CARDS

171N AMPX LIBRARY FROM BONAMI

171N ANISN LIBRARY

171N AMPX WORKING LIBRARY

000550

XSDRNPM (ZPR-6/7 INFINITE HOMOGENEOUS MEDIUM CALCULATION)

```
//XSDRN EXEC FORTHCLG,PARM.LKED='LET,OVLY',REGION.GO=400K,LIB=FORT
//SYSPRINT DD DUMMY
//FORT.SYSIN DD UNIT=TAPE9,DISP=(OLD,PASS),
// VOL=SER=RR0001,LABEL=(18,NL),
// DCB=(RECFM=FB,LRECL=80,BLKSIZE=3200)
//LKED.SLASM DD UNIT=3330,VOL=SER=NE3330,DSN=RWR.AMPX.SLASM.R8477,
// DISP=SHR,DCB=(RECFM=FB,LRECL=80,BLKSIZE=3200)
//LKED.SLFTN DD UNIT=3330,VOL=SER=NE3330,DSN=RWR.AMPX.SLFTN.R8477,
// DISP=SHR,DCB=(RECFM=FB,LRECL=80,BLKSIZE=3200)
//LKED.SYSIN DD *
      ENTRY MAIN
 INCLUDE SLASM
 INCLUDE SLFTN
    OVERLAY ONE
     INSERT MESAGE,FHLPR,LETTER
    OVERLAY ONE
     INSERT MIX,CMPS,JLL1,MIXEM,NCHI
    OVERLAY ONE
     INSERT FLSNT,STCRXS,PNCNST,TAPE,FIDAS,FFREAD
     INSERT DOQ,ROOTS,FIND,Q,QUADWT
    OVERLAY ONE
     INSERT XSDRNG
    OVERLAY TWO
     INSERT GEOMF,FIXSRC,REPICE,FISSRC,CONVRG
    OVERLAY TWO
     INSERT SCATSC,SCALFC,UPSCAL
    OVERLAY THREE
     INSERT SNPL
    OVERLAY THREE
     INSERT IT
    OVERLAY THREE
     INSERT CELL
    OVERLAY ONE
     INSERT OUTPUT,FFPUN,FLTFX,SPOUT,INVERT
     INSERT ANIS,AIDX,SNST
     INSERT INFACE,COLAPS,HOLLER,TR1D,TRSCI
    OVERLAY ONE
     INSERT FEWG,WATE,WAIT,RECRD2,WT1D,CFLUX,PHIDIV
     INSERT FRT1D,CORNTS,TRNPRT,FISCAP
    OVERLAY ONE
     INSERT ET,SUMARY,SUMFEW
    OVERLAY ONE
      INSERT EDIT,ACTY,RRATE
//GO.FT06F001 DD SYSOUT=A,DCB=(RECFM=FBA,LRECL=133,BLKSIZE=3458)
//GO.FT04F001 DD UNIT=SYSDA,
// DCB=(RECFM=VBS,LRECL=X,BLKSIZE=3520,BUFL=4000),
//  SPACE=(3520,(2000,50)),DSN=&&NITAW,DISP=(OLD,DELETE)
//GO.FT08F001 DD UNIT=SYSDA,SPACE=(3520,(900,20)),
// DCB=(RECFM=VBS,LRECL=X,BLKSIZE=3520,BUFL=4000)
//GO.FT09F001 DD UNIT=SYSDA,SPACE=(3520,(900,20)),
// DCB=(RECFM=VBS,LRECL=X,BLKSIZE=3520,BUFL=4000)
//GO.FT10F001 DD UNIT=SYSDA,SPACE=(3520,(900,20)),
// DCB=(RECFM=VBS,LRECL=X,BLKSIZE=3520,BUFL=4000)
//GO.FT16F001 DD UNIT=SYSDA,SPACE=(TRK,(900,50)),
// DCB=(RECFM=VBS,LRECL=X,BLKSIZE=3520,BUFL=4000)
//GO.FT18F001 DD UNIT=SYSDA,SPACE=(TRK,(900,50)),
// DCB=(RECFM=VBS,LRECL=X,BLKSIZE=3520,BUFL=4000)
//GO.FT19F001 DD UNIT=SYSDA,SPACE=(TRK,(900,50)),
// DCB=(RECFM=VBS,LRECL=X,BLKSIZE=3520,BUFL=4000)
//GO.FT05F001 DD *
ZPR67 INFINITE MEDIUM CALCULATION VIA BONAMI
6$$ 500 880 500 880 2 880
1$$ 1 1 1 1 1 1 12 4 3 1 2R25 25 0 3 T
13$$ F1
14$$ 1264 1265 1266 1261 9262 1267 1156 1276 1192 1191 1190 1197
15** 8.8672-4 1.177-4 1.33-5 1.26-5 5.777-3 2.357-4 9.2904-3 1.398-2
 1.297-2 2.709-3 1.24-3 2.12-4
T
33**F1 T
35** 0.0 1.0 36$$ 1 39$$ 1 40$$ 0 46$$ F2 T
```

XSDRNPM SOURCE PROGRAM

XSDRNPM OVERLAY CARDS

171N AMPX WORKING LIBRARY FROM NITAWL

00054

```
0$ ARRAY      2 ENTRIES READ
1$ ARRAY      1 ENTRIES READ
0T
```

AJAX (SELECT 12 NUCLIDES FOR ZPR-6/7 CALCULATION)

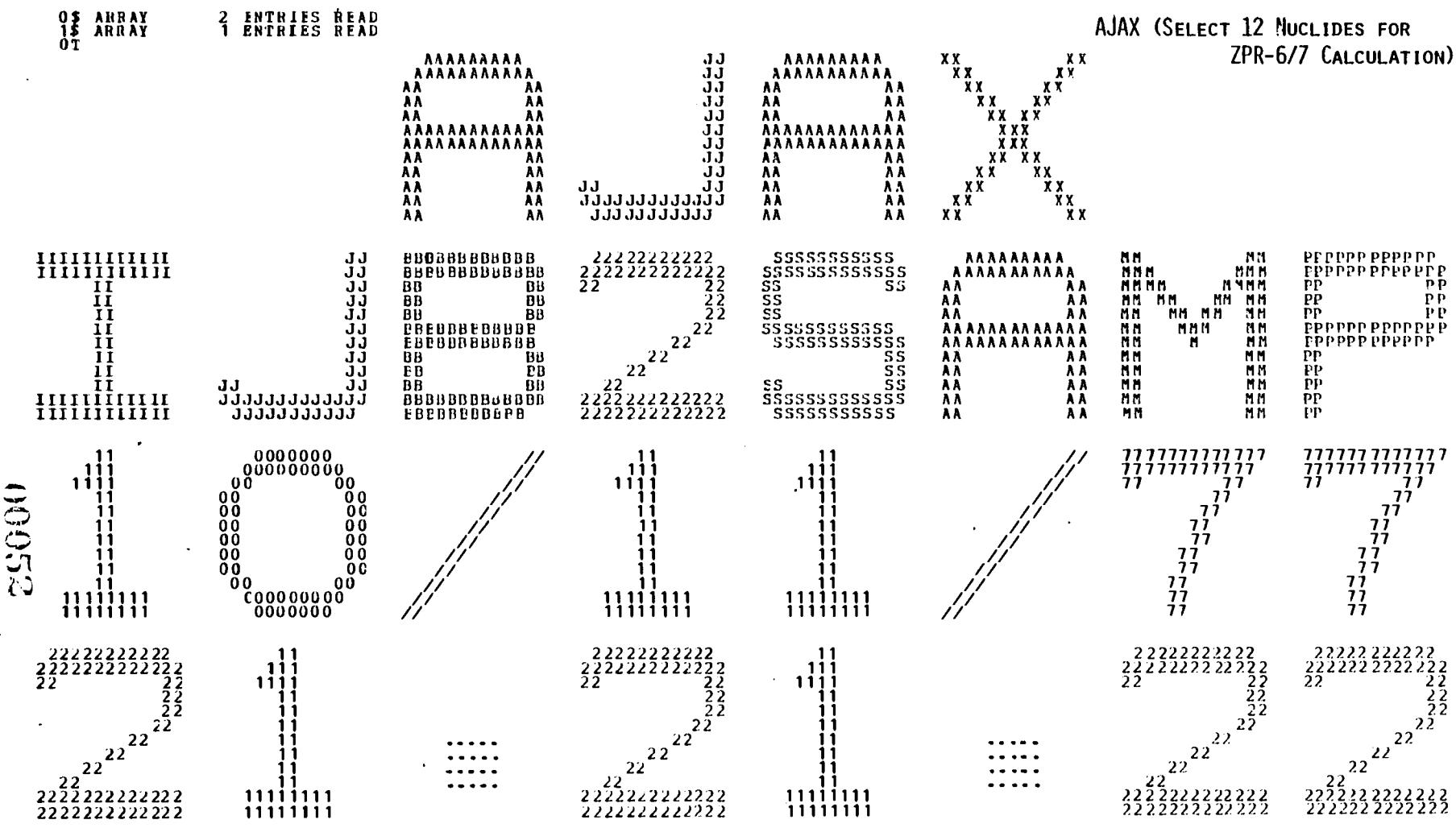

```
2$ ARRAY      2 ENTRIES READ
0T
3$ ARRAY     12 ENTRIES READ
0T
TABLE OF CONTENTS OF LOGICAL 78
```

CONTENTS OF SELECTED LIBRARY

ENTRY	IDENTIFIER	TITLE	SOURCE
1	1287	MO CASE FOR COMBINED CTR & CRBR PROCESSING	72
2	1266	PU241 CASE FOR COMBINED CTR & CRBR PROCESSING FEB '77	72
3	1156	NA CASE FOR REM SHIELDING PROBLEM	72
4	1192	FE CASE FOR REM SHIELDING PROBLEM	72
5	1261	U-235 CASE FOR COMBINED CTR & CRBR PROCESSING	72
6	9262	U-238 CASE FOR COMBINED LIBRARY (CTR & CRBR) MOD MT=2 TAPE	72
7	1264	PU239 CASE FOR COMBINED CTR & CRBR PROCESSING	72
8	1265	PU240 CASE FOR COMBINED CTR & CRBR PROCESSING	72
9	1276	O-16 CASE FOR COMBINED CTR & CRBR PROCESSING	72
10	1191	CR CASE FOR COMBINED CTR & CRBR PROCESSING	72
11	1100	NI CASE FOR COMBINED CTR & CRBR PROCESSING	72
12	1197	MN-55 CASE FOR COMBINED CTR & CRBR PROCESSING	72

DLC-41: OUTPUT FROM JOB2 OF THE ZPR-6/7 SAMPLE PROBLEM (2 OF 24)

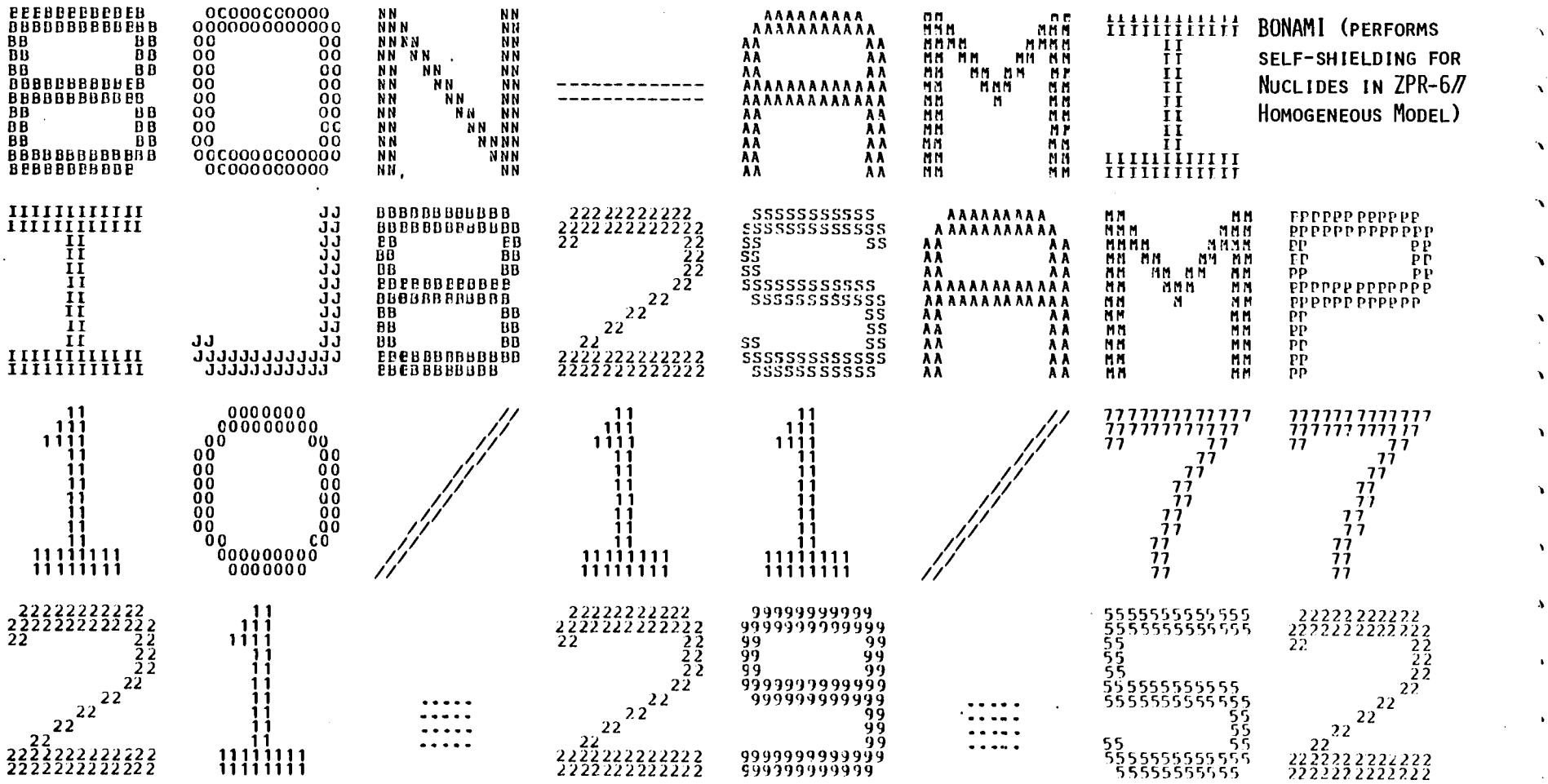

BONAMI (PERFORMS SELF-SHIELDING FOR NUCLIDES IN ZPR-6/7 HOMOGENEOUS MODEL)

0$ ARRAY 4 ENTRIES READ

(BONAMI OUTPUT CONTINUED ON NEXT PAGE)

BONAMI OUTPUT (CONTINUED)

```
    1$ ARRAY       6 ENTRIES READ
    OT
LOGICAL ASSIGNMENTS
MASTER LIBRARY    78
WORKING LIBRARY    0
SCRATCH FILE      18
NEW LIBRARY        1
P R O B L E M   D E S C R I P T I O N
IGR--GEOMETRY (0/1/2/3--INF MED/SLAB/CYL/SPHERE      0   <------------INFINITE MEDIUM OPTION
IZM--NUMBER OF ZONES OR MATERIAL REGIONS             1
MS--MIXING TABLE LENGTH                             12
IBL- -LEFT BOUNDARY CONDITION (0/1--VAC/REFL)        1
IBR--RIGHT BOUNDARY CONDITION (0/1--VAC/REFL)        1
ISSOPT--CELL DESCRIPTION FOR DANCOFF CORRECTION      0
CONVERGENCE CRITERION     1.00000E-03
WIGNER CONSTANT     1.35000E 00
    3$ ARRAY      12 ENTRIES READ
    4$ ARRAY      12 ENTRIES READ
    5* ARRAY      12 ENTRIES READ
    6$ ARRAY       1 ENTRIES READ
    7* ARRAY       1 ENTRIES READ
    8* ARRAY       1 ENTRIES READ
   10$ ARRAY      12 ENTRIES READ
   11$ ARRAY       1 ENTRIES READ
    OT
M I X I N G   T A B L E
ENTRY   MIXTURE   ISOTOPE   NUMBER DENSITY   NEW IDENTIFIER
  1        1        1264     8.86720E-04          1264
  2        1        1265     1.17700E-04          1265
  3        1        1266     1.33000E-05          1266
  4        1        1261     1.26000E-05          1261
  5        1        9262     5.77700E-03          9262
  6        1        1287     2.35700E-04          1287
  7        1        1156     9.29040E-03          1156
  8        1        1276     1.39800E-02          1276
  9        1        1192     1.29700E-02          1192
 10        1        1191     2.70900E-03          1191
 11        1        1190     1.24000E-03          1190
 12        1        1197     2.12000E-04          1197
GEOMETRY AND MATERIAL DESCRIPTION
ZONE   MIXTURE   OUTER DIMENSION   TEMPERATURE      EXTRA XS   TYPE (0/1--FUEL/MOD)
  1        1       8.81600E 01    3.00000E 02    0.0                  0
THIS CALCULATION REQUIRES   26284 LOCATIONS OF 50688 AVAILABLE TO THIS MODULE
  ELAPSED TIME   0.13 MIN.
  ELAPSED TIME   0.13 MIN.
                 BONDARENKO ITERATION STATISTICS
ITERATION      MT      MAX CHANGE     GROUP     ZONE     NEW VALUE     NUCLIDE        SIGO
    1           1     -4.441E-01      151        1      7.621E 01      1287       2.24670E 03
    1           2     -2.719E-01      151        1      5.138E 01      1287       2.24670E 03
    1         102     -2.878E-01      151        1      4.737E 01      1287       2.24670E 03
    1         254     -4.447E-01      151        1      7.585E 01      1287       2.24670E 03
    1           1     -1.262E-02      154        1      9.353E 01      1266       1.00000E 05
    1           2     -9.375E-03      164        1      1.022E 01      1266       2.83892E 04
    1          18     -7.913E-03      150        1      4.882E 01      1266       3.30883E 04
    1         102     -1.042E-02      154        1      4.220E 01      1266       1.00000E 05
    1         254     -1.265E-02      154        1      9.349E 01      1266       1.00000E 05
    1           1     -2.975E-01      109        1      9.900E 00      1156       2.54441E 01
    1           2     -1.768E-01      109        1      1.159E 01      1156       2.54441E 01
    1         102      3.811E-01       96        1      2.806E-04      1156       2.84781E 01
    1         254     -3.008E-01      109        1      9.593E 00      1156       2.54441E 01
```

NUCLIDE DENSITIES

ITERATION STATISTICS. SHOWS RESULT ONLY FOR GROUP WITH MAXIMUM CHANGE.

(BONAMI OUTPUT CONTINUED ON NEXT PAGE)

(BONAMI OUTPUT CONTINUED)

1	1	-5.107E-01	97	1	3.323E 00	1192	1.49276E 01
1	2	-2.914E-01	97	1	4.809E 00	1192	1.49276E 01
1	102	-5.356E-01	138	1	4.153E-01	1192	2.44515E 01
1	254	-5.198E-01	97	1	3.131E 00	1192	1.49276E 01
1	1	-7.224E-02	154	1	1.189E 02	1261	1.00000E 04
1	2	-1.107E-02	154	1	1.355E 01	1261	1.00000E 04
1	18	-4.102E-02	154	1	6.601E 01	1261	1.00000E 04
1	102	-4.747E-02	159	1	4.168E 01	1261	1.00000E 04
1	254	-7.226E-02	154	1	1.189E 02	1261	1.00000E 04
1	1	-9.819E-01	152	1	6.933E 00	9262	4.89936E 01
1	2	-9.653E-01	152	1	7.235E 00	9262	4.89940E 01
1	18	-1.559E-01	138	1	3.129E-04	9262	5.20575E 01
1	102	-9.682E-01	152	1	5.518E 00	9262	4.89940E 01
1	254	-9.819E-01	152	1	6.913E 00	9262	4.89940E 01
1	1	-6.683E-01	154	1	4.233E 01	1264	4.07029E 02
1	2	-2.756E-01	149	1	1.364E 01	1264	4.13729E 02
1	18	-5.200E-01	154	1	3.062E 01	1264	4.07029E 02
1	102	-5.625E-01	154	1	2.276E 01	1264	4.07029E 02
1	254	-6.684E-01	154	1	4.230E 01	1264	4.07029E 02
1	1	-8.816E-01	166	1	3.875E 03	1265	3.28188E 03
1	2	-7.545E-01	166	1	5.952E 02	1265	3.28189E 03
1	18	-7.264E-01	166	1	1.582E 00	1265	3.28189E 03
1	102	-7.266E-01	166	1	8.283E 03	1265	3.28189E 03
1	254	-8.816E-01	166	1	3.874E 03	1265	3.28189E 03
1	1	-1.039E-01	74	1	7.982E 00	1276	1.03015E 01
1	2	-5.449E-02	74	1	8.422E 00	1276	1.03015E 01
1	102	3.020E-02	169	1	5.092E-05	1276	4.78769E 01
1	254	-1.425E-01	74	1	4.290E 00	1276	1.03015E 01
1	1	-2.186E-01	110	1	1.226E 01	1191	9.64152E 01
1	2	-1.155E-01	110	1	1.386E 01	1191	9.64152E 01
1	102	-1.557E-01	136	1	3.653E-01	1191	1.37416E 02
1	254	-2.210E-01	110	1	1.195E 01	1191	9.64152E 01
1	1	-1.503E-01	122	1	5.611E 01	1190	1.75110E 02
1	2	-7.641E-02	122	1	6.091E 01	1190	1.75110E 02
1	102	-9.639E-02	122	1	7.696E-02	1190	1.75110E 02
1	254	-1.513E-01	122	1	5.532E 01	1190	1.75110E 02
1	1	-4.840E-01	143	1	5.550E 02	1197	1.71652E 03
1	2	-2.932E-01	143	1	7.425E 02	1197	1.71652E 03
1	102	-2.791E-01	143	1	1.793E 01	1197	1.71652E 03
1	254	-4.863E-01	143	1	5.458E 02	1197	1.71652E 03
2	1	-8.227E-02	151	1	6.994E 01	1287	1.79857E 03
2	2	-4.615E-02	151	1	4.901E 01	1287	1.79857E 03
2	102	-4.988E-02	151	1	4.501E 01	1287	1.79857E 03
2	254	-8.244E-02	151	1	6.960E 01	1287	1.79857E 03
2	1	-9.194E-03	155	1	2.884E 02	1266	2.99923E 04
2	2	-2.335E-03	155	1	1.750E 01	1266	2.99923E 04
2	18	5.589E-03	154	1	3.610E 01	1266	2.95229E 04
2	102	9.776E-03	154	1	4.261E 01	1266	2.95229E 04
2	254	-9.195E-03	155	1	2.883E 02	1266	2.99923E 04
2	1	-5.472E-03	136	1	9.121E 00	1156	3.27733E 01
2	2	-2.813E-03	136	1	9.267E 00	1156	3.27733E 01
2	102	-5.204E-03	97	1	3.119E-03	1156	2.18251E 01
2	254	-5.553E-03	136	1	8.850E 00	1156	3.27733E 01
2	1	-4.231E-03	138	1	9.396E 00	1192	1.82054E 01
2	2	-1.979E-03	97	1	4.799E 00	1192	1.47870E 01
2	102	-9.513E-02	138	1	3.758E-01	1192	1.82055E 01
2	254	-4.336E-03	97	1	3.117E 00	1192	1.47870E 01
2	1	-1.656E-07	9	1	5.758E 00	1261	9.80509E 03
2	2	-3.042E-07	6	1	3.135E 00	1261	9.69738E 03
2	18	-4.523E-07	7	1	2.108E 00	1261	9.73400E 03

(BONAMI OUTPUT CONTINUED ON NEXT PAGE)

00055

(BONAMI OUTPUT CONTINUED)

2	102	1.099E-07	3	1	2.119E-03	1261	9.76709E 03
2	254	-3.141E-07	7	1	3.036E 00	1261	9.73400E C3
2	1	-7.616E-02	158	1	2.192E 01	9262	5.71479E 01
2	2	-6.154E-02	154	1	9.689E 00	9262	5.42851E 01
2	18	-6.484E-03	138	1	3.109E-04	9262	4.97611E C1
2	102	-1.354E-01	158	1	2.764E 01	9262	5.71479E 01
2	254	-7.627E-02	158	1	2.188E 01	9262	5.71479E 01
2	1	-3.336E-02	143	1	3.396E 01	1264	5.06057E C2
2	2	-1.316E-02	143	1	1.589E 01	1264	5.06058E 02
2	18	-2.207E-02	143	1	1.098E 01	1264	5.06058E 02
2	102	-3.286E-02	143	1	1.090E 01	1264	5.06058E C2
2	254	-3.339E-02	143	1	3.392E 01	1264	5.06058E 02
2	1	-4.180E-02	143	1	3.408E 01	1265	4.03281E 03
2	2	-2.912E-02	143	1	2.859E 01	1265	4.03281E C3
2	18	-6.296E-03	143	1	2.338E-01	1265	4.03281E 03
2	102	-2.332E-02	143	1	1.004E 01	1265	4.03281E 03
2	254	-4.183E-02	143	1	3.400E 01	1265	4.03281E C3
2	1	-8.913E-05	74	1	7.981E 00	1276	1.02815E 01
2	2	-4.620E-05	74	1	8.422E 00	1276	1.02815E 01
2	102	9.785E-07	72	1	9.295E-06	1276	9.87488E C0
2	254	-1.263E-04	74	1	4.289E 00	1276	1.02815E 01
2	1	-1.526E-04	97	1	6.092E 00	1191	8.05459E 01
2	2	-7.448E-05	97	1	6.401E 00	1191	8.05459E C1
2	102	-3.107E-04	136	1	3.652E-01	1191	1.37145E 02
2	254	-1.564E-04	97	1	5.810E 00	1191	8.05459E 01
2	1	-9.845E-05	122	1	5.610E 01	1190	1.74928E C2
2	2	-5.436E-05	122	1	6.090E 01	1190	1.74928E 02
2	102	-6.661E-05	122	1	7.695E-02	1190	1.74928E 02
2	254	-9.874E-05	122	1	5.532E 01	1190	1.74928E C2
2	1	-2.924E-03	143	1	5.533E 02	1197	1.70294E 03
2	2	-1.501E-03	143	1	7.414E 02	1197	1.70294E 03
2	102	-1.408E-03	143	1	1.790E 01	1197	1.70294E C3
2	254	-2.948E-03	143	1	5.442E 02	1197	1.70294E 03
3	1	-2.757E-03	151	1	6.975E 01	1287	1.78625E 03
3	2	-1.513E-03	151	1	4.893E 01	1287	1.78625E C3
3	102	-1.641E-03	151	1	4.494E 01	1287	1.78625E 03
3	254	-2.763E-03	151	1	6.941E 01	1287	1.78625E 03
3	1	-8.037E-04	154	1	9.407E 01	1266	2.90590E C4
3	2	-1.324E-04	154	1	1.599E 01	1266	2.90590E 04
3	18	-3.702E-04	154	1	3.609E 01	1266	2.90590E 04
3	102	-5.496E-04	154	1	4.259E 01	1266	2.90590E C4
3	254	-8.039E-04	154	1	9.403E 01	1266	2.90590E 04
3	1	-5.855E-06	136	1	9.121E 00	1156	3.27655E 01
3	2	-3.175E-06	110	1	5.407E 00	1156	2.64825E C1
3	102	-2.366E-05	97	1	3.119E-03	1156	2.18053E 01
3	254	-6.035E-06	136	1	8.850E 00	1156	3.27655E 01
3	1	-2.395E-05	138	1	9.396E 00	1192	1.81737E C1
3	2	-3.623E-06	138	1	9.214E 00	1192	1.81737E 01
3	102	-6.057E-04	138	1	3.756E-01	1192	1.81737E 01
3	254	-2.424E-05	138	1	9.285E 00	1192	1.81737E C1
3	1	0.0	0	0	0.0	1261	1.81737E 01
3	2	0.0	0	0	0.0	1261	1.81737E 01
3	18	0.0	0	0	0.0	1261	1.81737E 01
3	102	0.0	0	0	0.0	1261	1.81737E C1
3	254	0.0	0	0	0.0	1261	1.81737E 01
3	1	-4.487E-04	154	1	1.290E 01	9262	5.42072E 01
3	2	-4.313E-04	149	1	1.196E 01	9262	5.58961E 01
3	18	-3.745E-05	138	1	3.109E-04	9262	4.97493E 01
3	102	-1.419E-03	143	1	1.293E 00	9262	7.14656E C1
3	254	-4.487E-04	154	1	1.288E 01	9262	5.42072E 01

(BONAMI OUTPUT CONTINUED ON NEXT PAGE)

00056

(BONAMI OUTPUT CONTINUED)

3	1	-1.887E-04	143	1	3.396E 01	1264	5.05446E 02
3	2	-7.334E-05	143	1	1.589E 01	1264	5.05446E 02
3	18	-1.250E-04	143	1	1.097E 01	1264	5.05446E 02
3	102	-1.877E-04	143	1	1.089E 01	1264	5.05446E 02
3	254	-1.894E-04	143	1	3.391E 01	1264	5.05446E 02
3	1	-1.634E-04	143	1	3.408E 01	1265	4.02964E 03
3	2	-1.132E-04	143	1	2.859E 01	1265	4.02964E 03
3	18	-6.661E-05	151	1	5.467E-01	1265	3.59011E 03
3	102	-9.110E-05	143	1	1.004E 01	1265	4.02964E 03
3	254	-1.629E-04	143	1	3.399E 01	1265	4.02964E 03
3	1	1.017E-06	160	1	3.750E 00	1276	2.08702E 01
3	2	-2.745E-07	85	1	3.474E 00	1276	1.11643E 01
3	102	-9.785E-07	72	1	9.295E-06	1276	9.87487E 00
3	254	2.656E-07	145	1	3.590E 00	1276	2.18403E 01
3	1	-4.667E-07	110	1	1.226E 01	1191	9.63711E 01
3	2	-2.980E-07	97	1	6.401E 00	1191	8.05456E 01
3	102	-6.529E-07	136	1	3.652E-01	1191	1.37144E 02
3	254	-8.589E-07	144	1	4.441E 00	1191	1.36168E 02
3	1	9.616E-07	135	1	1.587E 01	1190	4.24672E 02
3	2	9.603E-07	135	1	1.589E 01	1190	4.24672E 02
3	102	-7.745E-07	122	1	7.695E-02	1190	1.74927E 02
3	254	-9.170E-07	139	1	1.664E 01	1190	2.49204E 02
3	1	-3.044E-05	143	1	5.533E 02	1197	1.70280E 03
3	2	-1.548E-05	143	1	7.414E 02	1197	1.70280E 03
3	102	-1.449E-05	143	1	1.790E 01	1197	1.70280E 03
3	254	-3.050E-05	143	1	5.442E 02	1197	1.70280E 03
4	1	-3.194E-05	151	1	6.975E 01	1287	1.78611E 03
4	2	-1.746E-05	151	1	4.893E 01	1287	1.78611E 03
4	102	-1.902E-05	151	1	4.494E 01	1287	1.78611E 03
4	254	-3.188E-05	151	1	6.940E 01	1287	1.78611E 03
4	1	-4.866E-06	154	1	9.407E 01	1266	2.90563E 04
4	2	-9.542E-07	154	1	1.599E 01	1266	2.90563E 04
4	18	-2.114E-06	154	1	3.609E 01	1266	2.90563E 04
4	102	-3.583E-06	154	1	4.259E 01	1266	2.90563E 04
4	254	-4.868E-06	154	1	9.403E 01	1266	2.90563E 04
4	1	-9.062E-07	156	1	3.157E 00	1156	4.08265E 01
4	2	9.137E-07	156	1	3.131E 00	1156	4.08265E 01
4	102	8.306E-07	146	1	8.971E-03	1156	3.62527E 01
4	254	9.333E-07	156	1	3.066E 00	1156	4.08265E 01
4	1	-3.763E-07	54	1	2.535E 00	1192	9.50599E 00
4	2	-1.035E-07	138	1	9.214E 00	1192	1.81735E 01
4	102	-3.174E-06	138	1	3.756E-01	1192	1.81735E 01
4	254	-1.967E-07	116	1	9.698E 00	1192	1.57636E 01
4	1	0.0	0	0	0.0	1261	1.57636E 01
4	2	0.0	0	0	0.0	1261	1.57636E 01
4	18	0.0	0	0	0.0	1261	1.57636E 01
4	102	0.0	0	0	0.0	1261	1.57636E 01
4	254	0.0	0	0	0.0	1261	1.57636E 01
4	1	-3.030E-06	154	1	1.290E 01	9262	5.42067E 01
4	2	-2.659E-06	154	1	9.685E 00	9262	5.42067E 01
4	18	-7.489E-07	138	1	3.109E-04	9262	4.97482E 01
4	102	-8.851E-06	143	1	1.293E 00	9262	7.14639E 01
4	254	-3.036E-06	154	1	1.288E 01	9262	5.42067E 01
4	1	-1.797E-06	143	1	3.396E 01	1264	5.05441E 02
4	2	-6.418E-07	151	1	1.040E 01	1264	4.55981E 02
4	18	-1.289E-06	151	1	1.183E 01	1264	4.55981E 02
4	102	-1.977E-06	151	1	3.087E 01	1264	4.55981E 02
4	254	-2.046E-06	151	1	3.730E 01	1264	4.55981E 02
4	1	-1.343E-06	143	1	3.408E 01	1265	4.02960E 03
4	2	-1.068E-06	143	1	2.859E 01	1265	4.02960E 03
4	18	-6.541E-07	151	1	5.467E-01	1265	3.59011E 03
4	102	-8.551E-07	143	1	1.004E 01	1265	4.02960E 03
4	254	-1.795E-06	143	1	3.399E 01	1265	4.02960E 03
4	1	-1.017E-06	160	1	3.750E 00	1276	2.08702E 01
4	2	0.0	0	0	0.0	1276	2.08702E 01
4	102	-9.530E-07	122	1	9.543E-06	1276	1.67762E 01
4	254	0.0	0	0	0.0	1276	1.67762E 01
4	1	-3.344E-07	54	1	2.852E 00	1191	5.47951E 01
4	2	1.095E-06	154	1	4.353E 00	1191	1.38623E 02
4	102	-1.632E-07	136	1	3.652E-01	1191	1.37144E 02
4	254	-2.408E-07	85	1	3.960E 00	1191	7.10999E 01
4	1	0.0	0	0	0.0	1190	7.10999E 01
4	2	0.0	0	0	0.0	1190	7.10999E 01
4	102	0.0	0	0	0.0	1190	7.10999E 01
4	254	0.0	0	0	0.0	1190	7.10999E 01
4	1	1.073E-06	158	1	2.667E 00	1197	2.14925E 03
4	2	1.027E-06	158	1	1.857E 00	1197	2.14925E 03
4	102	-9.557E-07	158	1	8.108E-01	1197	2.14925E 03
4	254	0.0	0	0	0.0	1197	2.14925E 03

(BONAMI OUTPUT CONTINUED ON NEXT PAGE)

00057

NO CASE FOR COMBINED CTR & CRFR PROCESSING IDENTIFIER 1287 (BONAMI OUTPUT CONTINUED)

EDIT OF SELF-SHIELDED CROSS SECTIONS

GROUP	TOTAL	ELASTIC	FISSION	N-GAMMA	TRANSPORT
1	3.66450E 00	1.9289CE 00	0.0	7.90501E-04	1.96290E 00
2	3.76489E 00	1.96330E 00	0.0	9.05330E-04	2.01318E 00
3	3.83960E 00	2.00610E 00	0.0	1.08240E-03	2.05210E 00
4	3.86110E 00	2.0214CE 00	0.0	1.15720E-03	2.06130E 00
5	3.88090E 00	2.03550E 00	0.0	1.23240E-03	2.07850E 00
6	3.90580E 00	2.05370E 00	0.0	1.31270E-03	2.10050E 00
7	3.96970E 00	2.10310E 00	0.0	1.39840E-03	2.13420E 00
8	4.04880E 00	2.16460E 00	0.0	1.50060E-03	2.17450E 00
9	4.19439E 00	2.2927CE 00	0.0	1.75030E-03	2.24220E 00
10	4.29540E 00	2.39960E 00	0.0	2.01260E-03	2.28490E 00
11	4.30210E 00	2.4334CE 00	0.0	2.15900E-03	2.29100E 00
12	4.29120E 00	2.46100E 00	0.0	2.30640E-03	2.28380E 00
13	4.32910E 00	2.48730E 00	0.0	2.46380E-03	2.32580E 00
14	4.35430E 00	2.48720E 00	0.0	2.63630E-03	2.37600E 00
15	4.29300E 00	2.46340E 00	0.0	2.81620E-03	2.35650E 00
16	4.26720E 00	2.42700E 00	0.0	3.00840E-03	2.38070E 00
17	4.26670E 00	2.37340E 00	0.0	3.21370E-03	2.44180E 00
18	4.19870E 00	2.32240E 00	0.0	3.43290E-03	2.43150E 00
19	4.15050E 00	2.27380E 00	0.0	3.66700E-03	2.43770E 00
20	4.10730E 00	2.22760E 00	0.0	3.91719E-03	2.44540E 00
21	4.06290E 00	2.18020E 00	0.0	4.18479E-03	2.46290E 00
22	4.03160E 00	2.1471CE 00	0.0	4.36980E-03	2.48400E 00
23	4.00820E 00	2.12230E 00	0.0	4.51719E-03	2.49930E 00
24	3.97050E 00	2.08240E 00	0.0	4.77580E-03	2.52280E 00
25	3.92760E 00	2.0369CE 00	0.0	5.07829E-03	2.54820E 00
26	3.88680E 00	1.99370E 00	0.0	5.34109E-03	2.57070E 00
27	3.84810E 00	1.95260E 00	0.0	5.61609E-03	2.59090E 00
28	3.81130E 00	1.91360E 00	0.0	5.90070E-03	2.60890E 00
29	3.78410E 00	1.8842CE 00	0.0	6.20769E-03	2.62780E 00
30	3.76250E 00	1.86060E 00	0.0	6.52070E-03	2.64690E 00
31	3.77790E 00	1.8730CE 00	0.0	7.04020E-03	2.69220E 00
32	3.85620E 00	1.9485CE 00	0.0	7.77880E-03	2.77380E 00
33	3.98430E 00	2.07570E 00	0.0	8.59470E-03	2.87840E 00
34	4.07300E 00	2.16380E 00	0.0	9.25170E-03	2.96160E 00
35	4.12890E 00	2.21920E 00	0.0	9.73080E-03	3.01720E 00
36	4.18530E 00	2.28130E 00	0.0	1.02240E-02	3.07000E 00
37	4.24300E 00	2.35290E 00	0.0	1.07460E-02	3.11980E 00
38	4.29810E 00	2.42100E 00	0.0	1.12980E-02	3.16870E 00
39	4.35380E 00	2.48900E 00	0.0	1.18790E-02	3.21850E 00
40	4.44450E 00	2.5856CE 00	0.0	1.23770E-02	3.28470E 00
41	4.49990E 00	2.64970E 00	0.0	1.26450E-02	3.32380E 00
42	4.52170E 00	2.67340E 00	0.0	1.27510E-02	3.33930E 00
43	4.55410E 00	2.70850E 00	0.0	1.29090E-02	3.36250E 00
44	4.61750E 00	2.7774CE 00	0.0	1.32300E-02	3.40850E 00
45	4.71970E 00	2.88830E 00	0.0	1.37980E-02	3.48380E 00
46	4.83710E 00	3.01560E 00	0.0	1.45070E-02	3.57239E 00
47	4.96400E 00	3.16810E 00	0.0	1.52470E-02	3.66100E 00
48	5.11450E 00	3.37450E 00	0.0	1.60290E-02	3.75250E 00
49	5.25809E 00	3.5724CE 00	0.0	1.68540E-02	3.84240E 00
50	5.37340E 00	3.76060E 00	0.0	1.77160E-02	3.90930E 00
51	5.47070E 00	3.9396CE 00	0.0	1.86210E-02	3.96300E 00
52	5.56330E 00	4.11000E 00	0.0	1.95780E-02	4.01620E 00
53	5.61890E 00	4.27210E 00	0.0	2.05860E-02	4.03640E 00
54	5.66310E 00	4.44330E 00	0.0	2.16350E-02	4.04250E 00
55	5.75840E 00	4.65930E 00	0.0	2.27430E-02	4.08430E 00
56	5.85500E 00	4.86850E 00	0.0	2.39130E-02	4.13080E 00
57	5.96510E 00	5.06750E 00	0.0	2.51410E-02	4.19530E 00
58	6.07420E 00	5.2569CE 00	0.0	2.64260E-02	4.26280E 00
59	6.22660E 00	5.52100E 00	0.0	2.84910E-02	4.36030E 00
60	6.39150E 00	5.78250E 00	0.0	3.04510E-02	4.48050E 00
61	6.55480E 00	6.00190E 00	0.0	3.16820E-02	4.62180E 00
62	6.72389E 00	6.22880E 00	0.0	3.30720E-02	4.77190E 00
63	6.87199E 00	6.42740E 00	0.0	3.44130E-02	4.90660E 00
64	7.01230E 00	6.61520E 00	0.0	3.58020E-02	5.03700E 00
65	7.14800E 00	6.7965CE 00	0.0	3.72620E-02	5.16580E 00
66	7.28580E 00	6.96740E 00	0.0	3.87680E-02	5.29930E 00
67	7.42160E 00	7.1299CE 00	0.0	4.03380E-02	5.43320E 00
68	7.55100E 00	7.28450E 00	0.0	4.19750E-02	5.56260E 00
69	7.67420E 00	7.43160E 00	0.0	4.36770E-02	5.68749E 00
70	7.79120E 00	7.5715CE 00	0.0	4.51136E-02	5.80770E 00
71	7.90180E 00	7.70460E 00	0.0	4.57885E-02	5.92270E 00
72	8.00690E 00	7.8312CE 00	0.0	4.63950E-02	6.03330E 00
73	8.10680E 00	7.95140E 00	0.0	4.69720E-02	6.13990E 00
74	8.20730E 00	8.0699CE 00	0.0	4.79030E-02	6.31130E 00
75	8.31080E 00	8.1901CE 00	0.0	4.91840E-02	6.53560E 00

(BONAMI OUTPUT CONTINUED ON NEXT PAGE)

000558

(BONAMI OUTPUT CONTINUED)

76	8.38230E 00	8.27310E 00	0.0	5.01140E-02	6.69280E 00
77	8.42700E 00	8.32480E 00	0.0	5.08780E-02	6.79210E 00
78	8.48980E 00	8.39740E 00	0.0	5.19880E-02	6.93300E 00
79	8.56700E 00	8.48640E 00	0.0	5.35520E-02	7.10820E 00
80	8.60720E 00	8.53270E 00	0.0	5.44040E-02	7.20010E 00
81	8.61270E 00	8.53910E 00	0.0	5.45210E-02	7.21280E 00
82	8.61730E 00	8.54440E 00	0.0	5.46180E-02	7.22340E 00
83	8.62890E 00	8.55770E 00	0.0	5.49020E-02	7.25000E 00
84	8.65380E 00	8.58620E 00	0.0	5.55470E-02	7.30740E 00
85	8.70080E 00	8.63990E 00	0.0	5.67650E-02	7.41690E 00
86	8.74820E 00	8.69020E 00	0.0	5.80300E-02	7.54350E 00
87	8.78050E 00	8.72160E 00	0.0	5.89080E-02	7.64100E 00
88	8.81120E 00	8.75140E 00	0.0	5.97430E-02	7.73420E 00
89	8.84040E 00	8.77980E 00	0.0	6.06120E-02	7.82340E 00
90	8.86650E 00	8.79821E 00	0.0	6.15540E-02	7.90778E 00
91	8.88680E 00	8.79572E 00	0.0	6.24500E-02	7.98608E 00
92	8.90600E 00	8.79247E 00	0.0	6.33199E-02	8.06002E 00
93	8.92440E 00	8.78939E 00	0.0	6.43009E-02	8.13088E 00
94	8.94200E 00	8.78651E 00	0.0	6.52739E-02	8.19766E 00
95	8.95870E 00	8.78374E 00	0.0	6.61989E-02	8.26144E 00
96	8.97460E 00	8.78110E 00	0.0	6.71399E-02	8.31095E 00
97	8.98990E 00	8.77851E 00	0.0	6.81979E-02	8.34573E 00
98	9.00450E 00	8.77616E 00	0.0	6.92119E-02	8.37891E 00
99	9.01840E 00	8.77389E 00	0.0	7.01779E-02	8.40975E 00
100	9.03170E 00	8.77170E 00	0.0	7.11810E-02	8.44003E 00
101	9.04451E 00	8.76970E 00	0.0	7.22592E-02	8.46911E 00
102	8.97565E 00	8.72502E 00	0.0	7.29156E-02	8.42843E 00
103	8.45637E 00	8.44533E 00	0.0	7.08556E-02	7.95860E 00
104	8.44038E 00	8.41092E 00	0.0	7.58086E-02	7.96458E 00
105	8.34337E 00	8.35681E 00	0.0	7.81285E-02	7.87963E 00
106	8.34896E 00	8.33673E 00	0.0	8.21953E-02	7.90004E 00
107	8.29266E 00	8.28908E 00	0.0	8.65940E-02	7.86180E 00
108	8.26026E 00	8.24414E 00	0.0	9.25144E-02	7.86971E 00
109	8.25768E 00	8.21519E 00	0.0	9.94797E-02	8.04497E 00
110	8.20706E 00	8.16688E 00	0.0	1.10728E-01	8.13348E 00
111	8.14230E 00	8.10780E 00	0.0	1.23796E-01	8.08530E 00
112	8.12485E 00	8.07102E 00	0.0	1.37924E-01	8.06824E 00
113	8.12703E 00	8.05203E 00	0.0	1.50311E-01	8.07051E 00
114	8.18428E 00	8.06872E 00	0.0	1.68806E-01	8.12764E 00
115	8.23350E 00	8.08242E 00	0.0	1.84691E-01	8.17685E 00
116	8.11215E 00	8.01694E 00	0.0	1.90769E-01	8.05591E 00
117	8.00202E 00	7.95483E 00	0.0	1.96147E-01	7.94632E 00
118	7.98076E 00	7.93991E 00	0.0	2.01778E-01	7.92507E 00
119	7.99378E 00	7.94368E 00	0.0	2.05750E-01	7.93808E 00
120	7.99824E 00	7.94065E 00	0.0	2.13118E-01	7.94256E 00
121	8.02040E 00	7.94313E 00	0.0	2.27756E-01	7.96474E 00
122	8.10218E 00	7.99024E 00	0.0	2.65113E-01	8.04613E 00
123	8.15351E 00	8.02545E 00	0.0	3.08281E-01	8.09722E 00
124	8.23761E 00	8.10662E 00	0.0	3.63442E-01	8.18082E 00
125	8.50061E 00	8.29634E 00	0.0	4.22526E-01	8.44254E 00
126	8.61395E 00	8.43794E 00	0.0	4.88879E-01	8.55475E 00
127	8.79151E 00	8.62106E 00	0.0	5.54508E-01	8.73094E 00
128	9.08407E 00	8.88891E 00	0.0	6.10571E-01	9.02172E 00
129	9.36342E 00	9.12337E 00	0.0	6.47780E-01	9.29933E 00
130	9.80191E 00	9.41639E 00	0.0	6.79706E-01	9.73589E 00
131	1.03463E 01	9.74290E 00	0.0	7.08502E-01	1.02779E 01
132	1.02999E 01	9.77615E 00	0.0	7.27255E-01	1.02312E 01
133	1.01194E 01	9.73703E 00	0.0	7.45295E-01	1.00511E 01
134	9.87267E 00	9.66663E 00	0.0	7.67087E-01	9.80515E 00
135	9.58438E 00	9.56458E 00	0.0	7.89653E-01	9.51731E 00
136	9.32343E 00	9.49747E 00	0.0	8.23950E-01	9.25726E 00
137	9.16593E 00	9.61940E 00	0.0	8.04402E-01	9.09901E 00
138	8.87718E 00	9.25566E 00	0.0	8.22256E-01	8.81252E 00
139	8.61711E 00	7.49883E 00	0.0	1.20459E 00	8.56457E 00
140	9.37614E 00	8.36906E 00	0.0	1.20485E 00	9.31744E 00
141	1.51709E 01	1.38003E 01	0.0	2.98709E 00	1.50739E 01
142	1.71818E 01	1.40281E 01	0.0	4.32815E 00	1.70841E 01
143	5.77544E 00	5.04190E 00	0.0	7.33392E-01	5.74016E 00
144	5.59882E 00	5.27586E 00	0.0	3.22032E-01	5.56181E 00
145	5.54654E 00	5.51425E 00	0.0	3.17731E-02	5.50789E 00
146	2.67439E 01	2.13269E 01	0.0	1.24598E 01	2.65950E 01
147	6.53148E 00	5.27749E 00	0.0	1.26515E 00	6.49453E 00
148	5.36241E 00	5.20907E 00	0.0	1.50425E-01	5.32588E 00
149	8.08912E 00	5.73290E 00	0.0	2.40691E 00	8.04891E 00
150	8.23917E 00	7.26299E 00	0.0	9.80846E-01	8.18823E 00
151	6.97451E 01	4.89319E 01	0.0	4.49359E 01	6.94041E 01
152	5.14019E 00	4.72230E 00	0.0	4.19229E-01	5.10707E 00
153	4.98878E 00	4.80528E 00	0.0	1.76970E-01	4.95505E 00
154	5.00830E 00	4.86664E 00	0.0	1.27267E-01	4.97464E 00

(BONAMI OUTPUT CONTINUED ON NEXT PAGE)

00059

155	5.06914E 00	4.91183E 00	0.0	1.52057E-01	5.03471E 00
156	8.28006E 00	4.93720E 00	0.0	3.35307E 00	8.24548E 00
157	5.11968E 00	4.95511E 00	0.0	1.59476E-01	5.08495E 00
158	5.13292E 00	4.96865E 00	0.0	1.58617E-01	5.09798E 00
159	5.16241E 00	4.97646E 00	0.0	1.80722E-01	5.12748E 00
160	5.19556E 00	4.98171E 00	0.0	2.03856E-01	5.16063E 00
161	5.23166E 00	4.98575E 00	0.0	2.28093E-01	5.19655E 00
162	5.26104E 00	4.98895E 00	0.0	2.58102E-01	5.22646E 00
163	5.31071E 00	4.99140E 00	0.0	2.92621E-01	5.27570E 00
164	5.35911E 00	4.99335E 00	0.0	3.31253E-01	5.32399E 00
165	5.39677E 00	4.99485E 00	0.0	3.75119E-01	5.36174E 00
166	5.44014E 00	4.99600E 00	0.0	4.25985E-01	5.40501E 00
167	5.54267E 00	4.99690E 00	0.0	4.83210E-01	5.50764E 00
168	5.63155E 00	4.99760E 00	0.0	5.48343E-01	5.59652E 00
169	5.72501E 00	4.99815E 00	0.0	6.19100E-01	5.68997E 00
170	6.08172E 00	4.99920E 00	0.0	9.76506E-01	6.04686E 00
171	7.54177E 00	4.99990E 00	0.0	2.46230E 00	7.50667E 00

(BONAMI OUTPUT CONTINUED)

PU241 CASE FOR COMBINED CTR & CHER PROCESSING FEB '77 IDENTIFIER 1266

GROUP	TOTAL	ELASTIC	FISSION	N-GAMMA	TRANSPORT
1	5.76970E 00	2.75130E 00	2.62290E 00	1.29550E-02	3.31600E 00
2	5.76260E 00	2.76390E 00	2.61140E 00	1.35800E-02	3.29760E 00
3	5.75280E 00	2.77560E 00	2.59790E 00	1.43750E-02	3.27800E 00
4	5.73820E 00	2.72060E 00	2.60720E 00	1.49020E-02	3.32170E 00
5	5.73320E 00	2.67020E 00	2.60390E 00	1.53800E-02	3.37210E 00
6	5.73410E 00	2.63190E 00	2.57630E 00	1.57630E-02	3.41610E 00
7	5.73750E 00	2.59660E 00	2.52500E 00	1.60710E-02	3.45730E 00
8	5.74710E 00	2.59090E 00	2.42850E 00	1.64340E-02	3.47900E 00
9	5.77830E 00	2.67840E 00	2.25300E 00	1.72940E-02	3.44890E 00
10	5.81270E 00	2.70770E 00	2.20870E 00	1.80100E-02	3.47260E 00
11	5.84210E 00	2.69520E 00	2.20890E 00	1.90970E-02	3.52510E 00
12	5.87370E 00	2.63530E 00	2.25950E 00	2.05370E-02	3.61960E 00
13	5.91610E 00	2.60910E 00	2.28780E 00	2.16650E-02	3.69510E 00
14	5.97690E 00	2.61740E 00	2.29360E 00	2.25850E-02	3.74960E 00
15	6.05900E 00	2.66520E 00	2.28690E 00	2.36170E-02	3.78290E 00
16	6.16580E 00	2.74180E 00	2.27510E 00	2.47860E-02	3.81610E 00
17	6.29360E 00	2.84090E 00	2.25810E 00	2.59270E-02	3.85100E 00
18	6.42010E 00	2.93960E 00	2.22970E 00	2.72650E-02	3.88490E 00
19	6.54210E 00	3.01760E 00	2.15620E 00	2.90810E-02	3.93250E 00
20	6.68250E 00	3.07600E 00	2.07220E 00	3.11280E-02	4.01550E 00
21	6.82390E 00	3.12000E 00	1.97500E 00	3.29300E-02	4.11890E 00
22	6.91110E 00	3.15280E 00	1.90170E 00	3.40350E-02	4.18450E 00
23	6.97720E 00	3.20800E 00	1.84100E 00	3.48790E-02	4.20920E 00
24	7.06600E 00	3.35490E 00	1.73630E 00	3.61880E-02	4.19920E 00
25	7.21650E 00	3.60520E 00	1.59970E 00	3.71530E-02	4.12520E 00
26	7.33260E 00	3.86290E 00	1.49950E 00	3.80090E-02	4.03160E 00
27	7.43840E 00	4.02580E 00	1.50170E 00	4.05070E-02	4.00920E 00
28	7.53650E 00	4.06950E 00	1.51180E 00	4.35550E-02	4.08090E 00
29	7.61430E 00	4.07570E 00	1.51170E 00	4.58410E-02	4.17390E 00
30	7.68380E 00	4.09820E 00	1.50510E 00	4.77110E-02	4.24970E 00
31	7.77470E 00	4.12560E 00	1.51160E 00	5.09880E-02	4.35410E 00
32	7.85310E 00	4.14160E 00	1.52480E 00	5.84540E-02	4.48840E 00
33	7.87860E 00	4.13020E 00	1.53660E 00	6.39139E-02	4.60240E 00
34	7.86430E 00	4.09350E 00	1.55740E 00	6.58659E-02	4.67120E 00
35	7.83860E 00	4.05510E 00	1.57500E 00	6.82149E-02	4.70910E 00
36	7.79930E 00	4.00600E 00	1.59670E 00	7.13030E-02	4.73940E 00
37	7.74500E 00	3.94880E 00	1.62320E 00	7.46149E-02	4.75980E 00
38	7.67900E 00	3.90080E 00	1.65100E 00	7.71559E-02	4.75710E 00
39	7.61480E 00	3.87740E 00	1.67610E 00	7.99869E-02	4.73700E 00
40	7.55570E 00	3.85930E 00	1.69390E 00	8.25499E-02	4.71210E 00
41	7.52640E 00	3.85340E 00	1.70050E 00	8.35220E-02	4.69710E 00
42	7.51550E 00	3.85420E 00	1.70230E 00	8.37789E-02	4.68960E 00
43	7.49940E 00	3.85530E 00	1.70490E 00	8.41589E-02	4.67850E 00
44	7.46790E 00	3.85750E 00	1.71000E 00	8.49049E-02	4.65680E 00
45	7.41750E 00	3.86070E 00	1.71860E 00	8.63720E-02	4.62260E 00

(MOST OF THE SELF-SHIELDED CROSS SECTION EDIT HAS BEEN OMITTED)

(BONAMI OUTPUT CONTINUED ON NEXT PAGE)

09600

(BONAMI OUTPUT CONTINUED)

(PARTIAL EDIT OF MN-55 SELF-SHIELDED CROSS SECTIONS)

116	2.48998E 01	2.50149E 01	0.0	1.03794E-01	2.44814E 01
117	2.25464E 00	2.20887E 00	0.0	4.65916E-02	2.21863E 00
118	7.49555E 00	7.44934E 00	0.0	5.36845E-02	7.37554E 00
119	2.97380E 01	2.98498E 01	0.0	8.12911E-02	2.92620E 01
120	1.36087E 01	1.35918E 01	0.0	6.00760E-02	1.33957E 01
121	2.82101E 01	2.86521E 01	0.0	7.04959E-02	2.77754E 01
122	2.87433E 00	2.82359E 00	0.0	8.70894E-02	2.83407E 00
123	4.06930E 00	3.99736E 00	0.0	7.92228E-02	4.01711E 00
124	1.64451E 01	1.64508E 01	0.0	8.69132E-02	1.62424E 01
125	6.73233E 01	6.84977E 01	0.0	8.88138E-02	6.64848E 01
126	2.26080E 01	2.32401E 01	0.0	3.78602E-02	2.23232E 01
127	7.16812E 00	7.16157E 00	0.0	7.79181E-03	7.08042E 00
128	1.57646E 01	1.57536E 01	0.0	1.28714E-02	1.55723E 01
129	2.80683E 01	2.80458E 01	0.0	2.31549E-02	2.77252E 01
130	4.98884E 01	4.98486E 01	0.0	4.40725E-02	4.92786E 01
131	1.04888E 02	1.04846E 02	0.0	1.02966E-01	1.03597E 02
132	2.09807E 02	2.09690E 02	0.0	2.24344E-01	2.07246E 02
133	3.68600E 02	3.68876E 02	0.0	4.21863E-01	3.64089E 02
134	5.99171E 02	5.99218E 02	0.0	7.67776E-01	5.91834E 02
135	3.03854E 02	3.07781E 02	0.0	4.56913E-01	3.00079E 02
136	6.91871E 01	6.98040E 01	0.0	1.41537E-01	6.83315E 01
137	1.44504E 01	1.43637E 01	0.0	9.65832E-02	1.42751E 01
138	8.03487E 01	9.69694E 01	0.0	3.02034E 00	7.91634E 01
139	1.70921E 01	1.69796E 01	0.0	1.15197E-01	1.68850E 01
140	1.53441E 01	1.52260E 01	0.0	1.16895E-01	1.51570E 01
141	2.77081E 01	2.74187E 01	0.0	3.17953E-01	2.73734E 01
142	1.74314E 02	1.89017E 02	0.0	3.56226E 00	1.72003E 02
143	5.53314E 02	7.41386E 02	0.0	1.79040E 01	5.44220E 02
144	4.44696E 01	4.31518E 01	0.0	1.51951E 00	4.39419E 01
145	1.42946E 01	1.36325E 01	0.0	6.65645E-01	1.41275E 01
146	7.77374E 00	7.30616E 00	0.0	4.68379E-01	7.68430E 00
147	5.37761E 00	4.97920E 00	0.0	3.97153E-01	5.31667E 00
148	4.14082E 00	3.76787E 00	0.0	3.72563E-01	4.09470E 00
149	3.51159E 00	3.12931E 00	0.0	3.70723E-01	3.47336E 00
150	3.06112E 00	2.68492E 00	0.0	3.81606E-01	3.02826E 00
151	2.83327E 00	2.41435E 00	0.0	4.04471E-01	2.80387E 00
152	2.69942E 00	2.27526E 00	0.0	4.35400E-01	2.67140E 00
153	2.63160E 00	2.17090E 00	0.0	4.74502E-01	2.60487E 00
154	2.60353E 00	2.08873E 00	0.0	5.24021E-01	2.57781E 00
155	2.61894E 00	2.02546E 00	0.0	5.80149E-01	2.59404E 00
156	2.63280E 00	1.97633E 00	0.0	6.46382E-01	2.60877E 00
157	2.61765E 00	1.89449E 00	0.0	7.24986E-01	2.59453E 00
158	2.66699E 00	1.85677E 00	0.0	8.10776E-01	2.64399E 00
159	2.74630E 00	1.83422E 00	0.0	9.12678E-01	2.72386E 00
160	2.84467E 00	1.81661E 00	0.0	1.03074E 00	2.82253E 00
161	2.96913E 00	1.80295E 00	0.0	1.15874E 00	2.94702E 00
162	3.10730E 00	1.79225E 00	0.0	1.31241E 00	3.08536E 00
163	3.27036E 00	1.78395E 00	0.0	1.48412E 00	3.24844E 00
164	3.47196E 00	1.77753E 00	0.0	1.67362E 00	3.45003E 00
165	3.67480E 00	1.77252E 00	0.0	1.89664E 00	3.65296E 00
166	3.91928E 00	1.76866E 00	0.0	2.14538E 00	3.89762E 00
167	4.21663E 00	1.76558E 00	0.0	2.42756E 00	4.19486E 00
168	4.51623E 00	1.76313E 00	0.0	2.75571E 00	4.49461E 00
169	4.88955E 00	1.76138E 00	0.0	3.11162E 00	4.86791E 00
170	6.66781E 00	1.75786E 00	0.0	4.90798E 00	6.64622E 00
171	1.41074E 01	1.75540E 00	0.0	1.23534E 01	1.40854E 01

TAPE ID 4321 NUMBER OF NUCLIDES 12
NUMBER OF NEUTRON GROUPS 171 NUMBER OF GAMMA GROUPS 0
FIRST THERMAL GROUP 171

TABLE OF CONTENTS

MO	CASE FOR COMBINED CTR & CRBR PROCESSING	ID	1297
PU241	CASE FOR COMBINED CTR & CRBR PROCESSING FEB '77	ID	1266
NA	CASE FOR REM SHIELDING PROBLEM	ID	1156
FE	CASE FOR REM SHIELDING PROBLEM	ID	1192
U-235	CASE FOR COMBINED CTR & CRBR PROCESSING	ID	1261
U-238	CASE FOR COMBINED LIBRARY (CTR & CRBR) MOD MT=2 TAPE	ID	9262
PU239	CASE FOR COMBINED CTR & CRBR PROCESSING	ID	1264
PU240	CASE FOR COMBINED CTR & CRBR PROCESSING	ID	1265
O-16	CASE FOR COMBINED CTR & CRBR PROCESSING	ID	1276
CR	CASE FOR COMBINED CTR & CRBR PROCESSING	ID	1191
NI	CASE FOR COMBINED CTR & CRBR PROCESSING	ID	1190
MN-55	CASE FOR COMBINED CTR & CRBR PROCESSING	ID	1197

TAPE COPY USED 3492 I/O'S, AND TOOK 3.00 SECONDS
ELAPSED TIME 1.06 MIN.

CONTENTS OF 171N SELF-SHIELDED SHIELDED MPX MASTER

(END OF BONAMI OUTPUT)

190061

RADE (TEST THE 171N AMPX SELF-SHIELDED LIBRARY)

```
RRRRRRRRRRRR      AAAAAAAAA      DDDDDDDDDDDD    EEEEEEEEEEEEEE
RRRRRRRRRRRRR    AAAAAAAAAAA     DDDDDDDDDDDDD   EEEEEEEEEEEEEE
RR         RR   AA         AA    DD         DD   EE
RR         RR   AA         AA    DD         DD   EE
RR         RR   AA         AA    DD         DD   EE
RRRRRRRRRRRRR   AAAAAAAAAAAAAA   DD         DD   EEEEEEEEE
RRRRRRRRRRRR    AAAAAAAAAAAAAA   DD         DD   EEEEEEEEE
RR       RR     AA         AA    DD         DD   EE
RR        RR    AA         AA    DD         DD   EE
RR         RR   AA         AA    DD         DD   EE
RR          RR  AA         AA    DDDDDDDDDDDDD   EEEEEEEEEEEEEE
RR          RR  AA         AA    DDDDDDDDDDDDD   EEEEEEEEEEEEEE

IIIIIIIIIIII                JJ   BBBBBBBBBBBB     222222222222     SSSSSSSSSSS      AAAAAAAAA     MM          MM   PPPPPPPPPPPP
IIIIIIIIIIII                JJ   BBBBBBBBBBBBB   2222222222222   SSSSSSSSSSSSS    AAAAAAAAAAA    MMM        MMM   PPPPPPPPPPPPPP
     II                     JJ   BB          BB  22          22   SS         SS   AA         AA   MMMM      MMMM   PP          PP
     II                     JJ   BB          BB              22   SS              AA         AA   MM MM    MM MM   PP          PP
     II                     JJ   BB          BB              22   SS              AA         AA   MM  MM  MM  MM   PP          PP
     II                     JJ   BBBBBBBBBBBB               22    SSSSSSSSSSS     AAAAAAAAAAAAAA   MM   MMM    MM   PPPPPPPPPPPP
     II                     JJ   BBBBBBBBBBBB            22       SSSSSSSSSSSS    AAAAAAAAAAAAAA   MM    M     MM   PPPPPPPPPPPP
     II                     JJ   BB          BB         22                  SS   AA         AA   MM          MM   PP
     II                     JJ   BB          BB       22                    SS   AA         AA   MM          MM   PP
     II              JJ     JJ   BB          BB     22                      SS   AA         AA   MM          MM   PP
IIIIIIIIIIII         JJJJJJJJJJJJ BBBBBBBBBBBBB   2222222222222   SSSSSSSSSSSSS    AA         AA   MM          MM   PP
IIIIIIIIIIII          JJJJJJJJJJJ  BBBBBBBBBBBB   2222222222222    SSSSSSSSSSS     AA         AA   MM          MM   PP

     11              0000000                        11              11                             7777777777777   7777777777777
    111             000000000                      111             111                             777777777777    777777777777
   1111            00       00                     1111            1111                            77        77    77        77
    11            00         00                     11              11                                     77              77
    11            00         00                     11              11                                    77               77
    11            00         00                     11              11                                   77                77
    11            00         00                     11              11                                  77                 77
    11            00         00                     11              11                                 77                  77
    11            00         00                     11              11                                77                   77
    11             00       00                      11              11                               77                    77
 11111111           000000000                     11111111        11111111                          77                    77
 11111111            0000000                      11111111        11111111                          77                    77

 22222222222          11                                44      5555555555555                    22222222222     99999999999
2222222222222        111                               444      5555555555555                   2222222222222   9999999999999
22          22      1111                             4444      55                              22          22  99          99
            22       11                            44  44      55                                      22  99          99
            22       11                           44   44      55                                      22  99          99
          22         11                          44    44      555555555555                          22     9999999999999
       22            11                 .....   44     44      555555555555          .....               22     99999999999
     22              11                 .....   444444444444              55          .....                 22                 99
   22                11                 .....   444444444444              55          .....               22                   99
2222222222222      11111111                            44      55          55          .....             22                     99
2222222222222      11111111                            44       5555555555555                   2222222222222   9999999999999
                                                            5555555555555                   2222222222222   9999999999999
```

```
  1$ ARRAY      4 ENTRIES READ
  2$ ARRAY     20 ENTRIES READ
  OT
TABLE OF CONTENTS FOR THE MASTER LIBRARY ON LOGICAL     1

  1      MO     CASE FOR COMBINED CTR & CRBR PROCESSING                                  1287
  2      PU241  CASE FOR COMBINED CTR & CRBR PROCESSING FEB '77                          1296
  3       NA CASE FOR REM SHIELDING PROBLEM                                              1156
  4       FE CASE FOR REM SHIELDING PROBLEM                                              1192
  5      U-235 CASE FOR COMBINED CTR & CRBR PROCESSING                                   1261
  6      U-238 CASE FOR COMBINED LIBRARY (CTR & CRBR)   MOD MT=2 TAPE                    9262
  7      PU239 CASE FOR COMBINED CTR & CRBR PROCESSING                                   1264
  8      PU240 CASE FOR COMBINED CTR & CRBR PROCESSING                                   1265
  9      O-16  CASE FOR COMBINED CTR & CRBR PROCESSING                                   1276
 10      CR    CASE FOR COMBINED CTR & CRBR PROCESSING                                   1191
 11       NI   CASE FOR COMBINED CTR & CRBR PROCESSING                                   1190
 12      MN-55 CASE FOR COMBINED CTR & CRBR PROCESSING                                   1197
```

CONTENTS OF THE LIBRARY

(RADE OUTPUT CONTINUED ON NEXT PAGE)

RADE OUTPUT (CONTINUED)
ENERGY GROUP STRUCTURE (EV)

THIS LIBRARY HAS A 171 GROUP NEUTRON STRUCTURE

GROUP	RANGE
1	1.733299E 07---1.648700E 07
2	1.648700E 07---1.568300E 07
3	1.568300E 07---1.491800E 07
4	1.491800E 07---1.455000E 07
5	1.455000E 07---1.419100E 07
6	1.419100E 07---1.384000E 07
7	1.384000E 07---1.349900E 07
8	1.349900E 07---1.284000E 07
9	1.284000E 07---1.221400E 07
10	1.221400E 07---1.161800E 07
11	1.161800E 07---1.105200E 07
12	1.105200E 07---1.051300E 07
13	1.051300E 07---1.000000E 07
14	1.000000E 07---9.512300E 06
15	9.512300E 06---9.048400E 06
16	9.048400E 06---8.607100E 06
17	8.607100E 06---8.187300E 06
18	8.187300E 06---7.788000E 06
19	7.788000E 06---7.408200E 06
20	7.408200E 06---7.046900E 06
21	7.046900E 06---6.703200E 06
22	6.703200E 06---6.592400E 06
23	6.592400E 06---6.376300E 06
24	6.376300E 06---6.065300E 06
25	6.065300E 06---5.769500E 06
26	5.769500E 06---5.488100E 06
27	5.488100E 06---5.220500E 06
28	5.220500E 06---4.965900E 06
29	4.965900E 06---4.723700E 06
30	4.723700E 06---4.493300E 06
31	4.493300E 06---4.065700E 06
32	4.065700E 06---3.678800E 06
33	3.678800E 06---3.328700E 06
34	3.328700E 06---3.166400E 06
35	3.166400E 06---3.011900E 06
36	3.011900E 06---2.865000E 06
37	2.865000E 06---2.725300E 06
38	2.725300E 06---2.592400E 06
39	2.592400E 06---2.466000E 06
40	2.466000E 06---2.385200E 06
41	2.385200E 06---2.365300E 06
42	2.365300E 06---2.345700E 06
[illegible]	2.345700E 06---2.306900E 06
44	2.306900E 06---2.231300E 06
45	2.231300E 06---2.122500E 06
46	2.122500E 06---2.019000E 06
47	2.019000E 06---1.920500E 06
48	1.920500E 06---1.826800E 06
49	1.826800E 06---1.737700E 06
50	1.737700E 06---1.653000E 06
51	1.653000E 06---1.572400E 06
52	1.572400E 06---1.495700E 06
53	1.495700E 06---1.422700E 06
54	1.422700E 06---1.353400E 06
55	1.353400E 06---1.287300E 06
56	1.287300E 06---1.224600E 06
57	1.224600E 06---1.164800E 06
58	1.164800E 06---1.108000E 06
59	1.108000E 06---1.002600E 06
60	1.002600E 06---9.616400E 05
61	9.616400E 05---9.071800E 05
62	9.071800E 05---8.629400E 05
63	8.629400E 05---8.208500E 05
64	8.208500E 05---7.808200E 05
65	7.808200E 05---7.427400E 05
66	7.427400E 05---7.065100E 05
67	7.065100E 05---6.720600E 05
68	6.720600E 05---6.392800E 05
69	6.392800E 05---6.081000E 05
70	6.081000E 05---5.784400E 05
71	5.784400E 05---5.502300E 05
72	5.502300E 05---5.234000E 05
73	5.234000E 05---4.978700E 05
74	4.978700E 05---4.549000E 05
75	4.549000E 05---4.076200E 05
76	4.076200E 05---3.877400E 05
77	3.877400E 05---3.688300E 05
78	3.688300E 05---3.337300E 05
79	3.337300E 05---3.019700E 05
80	3.019700E 05---2.985000E 05
81	2.985000E 05---2.972000E 05

(RADE OUTPUT CONTINUED ON NEXT PAGE)

000053

RADE OUTPUT (CONTINUED)

82	2.972000E 05	---	2.945200E 05
83	2.945200E 05	---	2.872500E 05
84	2.872500E 05	---	2.732400E 05
85	2.732400E 05	---	2.472400E 05
86	2.472400E 05	---	2.351800E 05
87	2.351800E 05	---	2.237100E 05
88	2.237100E 05	---	2.128000E 05
89	2.128000E 05	---	2.024200E 05
90	2.024200E 05	---	1.925500E 05
91	1.925500E 05	---	1.831600E 05
92	1.831600E 05	---	1.742200E 05
93	1.742200E 05	---	1.657300E 05
94	1.657300E 05	---	1.576400E 05
95	1.576400E 05	---	1.499600E 05
96	1.499600E 05	---	1.426400E 05
97	1.426400E 05	---	1.356900E 05
98	1.356900E 05	---	1.290700E 05
99	1.290700E 05	---	1.227700E 05
100	1.227700E 05	---	1.167900E 05
101	1.167900E 05	---	1.110900E 05
102	1.110900E 05	---	9.803700E 04
103	9.803700E 04	---	8.651700E 04
104	8.651700E 04	---	8.250000E 04
105	8.250000E 04	---	7.950000E 04
106	7.950000E 04	---	7.200000E 04
107	7.200000E 04	---	6.737900E 04
108	6.737900E 04	---	5.656200E 04
109	5.656200E 04	---	5.247500E 04
110	5.247500E 04	---	4.630900E 04
111	4.630900E 04	---	4.086800E 04
112	4.086800E 04	---	3.430700E 04
113	3.430700E 04	---	3.182800E 04
114	3.182800E 04	---	2.850000E 04
115	2.850000E 04	---	2.700000E 04
116	2.700000E 04	---	2.605800E 04
117	2.605800E 04	---	2.478800E 04
118	2.478800E 04	---	2.417600E 04
119	2.417600E 04	---	2.357900E 04
120	2.357900E 04	---	2.187500E 04
121	2.187500E 04	---	1.930500E 04
122	1.930500E 04	---	1.503400E 04
123	1.503400E 04	---	1.170900E 04
124	1.170900E 04	---	9.118797E 03
125	9.118797E 03	---	7.101699E 03
126	7.101699E 03	---	5.530797E 03
127	5.530797E 03	---	4.307398E 03
128	4.307398E 03	---	3.707400E 03
129	3.707400E 03	---	3.354600E 03
130	3.354600E 03	---	3.035400E 03
131	3.035400E 03	---	2.746500E 03
132	2.746500E 03	---	2.612600E 03
133	2.612600E 03	---	2.485200E 03
134	2.485200E 03	---	2.248700E 03
135	2.248700E 03	---	2.034700E 03
136	2.034700E 03	---	1.584600E 03
137	1.584600E 03	---	1.234100E 03
138	1.234100E 03	---	9.611199E 02
139	9.611199E 02	---	7.485198E 02
140	7.485198E 02	---	5.829500E 02
141	5.829500E 02	---	4.540000E 02
142	4.540000E 02	---	3.535798E 02
143	3.535798E 02	---	2.753599E 02
144	2.753599E 02	---	2.144500E 02
145	2.144500E 02	---	1.670200E 02
146	1.670200E 02	---	1.300700E 02
147	1.300700E 02	---	1.013000E 02
148	1.013000E 02	---	7.889299E 01
149	7.889299E 01	---	6.144199E 01
150	6.144199E 01	---	4.785100E 01
151	4.785100E 01	---	3.726700E 01
152	3.726700E 01	---	2.920299E 01
153	2.920299E 01	---	2.260300E 01
154	2.260300E 01	---	1.760300E 01
155	1.760300E 01	---	1.371000E 01
156	1.371000E 01	---	1.067700E 01
157	1.067700E 01	---	8.315300E 00
158	8.315300E 00	---	6.476000E 00
159	6.476000E 00	---	5.043500E 00
160	5.043500E 00	---	3.927899E 00
161	3.927899E 00	---	3.058999E 00
162	3.058999E 00	---	2.372399E 00

(RADE OUTPUT CONTINUED ON NEXT PAGE)

00064

RADE OUTPUT (CONTINUED)

```
 163          2.372399E 00---1.855399E 00
 164          1.855399E 00---1.445000E 00
 165          1.445000E 00---1.125400E 00
 166          1.125400E 00---8.764200E-01
 167          8.764200E-01---6.825600E-01
 168          6.825600E-01---5.315800E-01
 169          5.315800E-01---4.139900E-01
 170          4.139900E-01---9.999996E-02
 171          9.999996E-02---1.000000E-05
 CHECKING TOLERANCE= 1.00000E-02 PER CENT
AMPX NUCLIDE       1287 MO    CASE FOR COMBINED CTR & CRBR PROCESSING
     HAS THE FOLLOWING DATA
    0 RESOLVED RESONANCES                          0 UNRESOLVED RESONANCE POINTS
   16 TEMP IND 1-D NEUT PROCESSES                  4 2-D NEUT PROCESSES
    0 TEMP DEP 1-D NEUT PROCESSES                  0 1-D GAMMA PROCESSES
    0 2-D GAMMA PROCESSES                          0 2-D NEUT-TO-GAMMA PROCESSES
    4 BONDARENKO PROCESSES                         0 ENDF MAT OF FAST NEUT DATA
                                                   0 ENDF MAT OF THERMAL NEUT DATA
                                                   0 ENDF MAT OF YIELD DATA
   20 RECORDS FOR NUCLIDE                          0 ENDF MAT OF GAMMA DATA
THIS NUCLIDE HAS THE FOLLOWING 1-D NEUTRON PROCESSES
       1.        2.        4.       16.       17.       91.      102.      251.      254.      252.
     285.     1001.       27.      101.     1033.     2001.
2-D NEUT PROCESSES
        MT    LENGTH     ORDER     TEMPS
 1       2       541         3         0
 2      16      1836         0         0
 3      17       349         0         0
 4      91      6889         0         0
NUCLIDE        1287 HAS BEEN CHECKED
AMPX NUCLIDE       1266 PU241 CASE FOR COMBINED CTR & CRBR PROCESSING FEB '77
     HAS THE FOLLOWING DATA
    0 RESOLVED RESONANCES                          0 UNRESOLVED RESONANCE POINTS
   34 TEMP IND 1-D NEUT PROCESSES                 19 2-D NEUT PROCESSES
    0 TEMP DEP 1-D NEUT PROCESSES                  0 1-D GAMMA PROCESSES
    0 2-D GAMMA PROCESSES                          0 2-D NEUT-TO-GAMMA PROCESSES
    5 BONDARENKO PROCESSES                         0 ENDF MAT OF FAST NEUT DATA
                                                   0 ENDF MAT OF THERMAL NEUT DATA
                                                   0 ENDF MAT OF YIELD DATA
   82 RECORDS FOR NUCLIDE                          0 ENDF MAT OF GAMMA DATA
THIS NUCLIDE HAS THE FOLLOWING 1-D NEUTRON PROCESSES
       1.        2.        4.       16.       17.       18.      452.       51.       52.       53.
      54.       55.       56.       57.       58.       59.       60.       61.       62.       63.
      64.       65.       91.      102.      251.      254.      252.      285.     1001.       27.
     101.     1033.     1018.     2001.
2-D NEUT PROCESSES
        MT    LENGTH     ORDER     TEMPS
 1       2       522         3         0
 2      51       320         3         0
 3      52       303         3         0
 4      53       250         3         0
 5      54       207         3         0
 6      55       228         3         0
 7      56       255         3         0
 8      57       322         3         0
 9      58       282         3         0
10      59       330         3         0
11      60       229         3         0
12      61       207         3         0
13      62       203         3         0
14      63       218         3         0
15      64       203         3         0
16      65       207         3         0
17      16      3891         0         0
18      17      1440         0         0
19      91      8318         0         0
NUCLIDE        1266 HAS BEEN CHECKED
```

CHECKING TOLERANCE

SUMMARY OF THE TYPES OF DATA ON THE AMPX LIBRARY (MOLYBDENUM)

CHECKING COMPLETE

NEXT NUCLIDE

(RADE OUTPUT CONTINUED ON NEXT PAGE)

RADE OUTPUT (CONTINUED)

```
AMPX NUCLIDE        1156  NA CASE FOR REM SHIELDING PROBLEM
     HAS THE FOLLOWING DATA
    0 RESOLVED RESONANCES                          0 UNRESOLVED RESONANCE POINTS
   36 TEMP IND 1-D NEUT PROCESSES                 21 2-D NEUT PROCESSES
    0 TEMP DEP 1-D NEUT PROCESSES                  0 1-D GAMMA PROCESSES
    0 2-D GAMMA PROCESSES                          0 2-D NEUT-TO-GAMMA PROCESSES
    4 BONDARENKO PROCESSES                         0 ENDF MAT OF FAST NEUT DATA
                                                   0 ENDF MAT OF THERMAL NEUT DATA
                                                   0 ENDF MAT OF YIELD DATA
   91 RECORDS FOR NUCLIDE                          0 ENDF MAT OF GAMMA DATA
THIS NUCLIDE HAS THE FOLLOWING 1-D NEUTRON PROCESSES
      1.        2.        3.        4.       16.       51.       52.       53.       54.       55.
     56.       57.       58.       59.       60.       61.       62.       63.       64.       65.
     66.       67.       68.       91.      102.      103.      107.      251.      254.      252.
    285.     1001.       27.      101.     1033.     2001.
2-D NEUT PROCESSES
        MT    LENGTH     ORDER     TEMPS
 1       2       871         3         0
 2      51       548         3         0
 3      52       530         3         0
 4      53       469         3         0
 5      54       467         3         0
 6      55       468         3         0
 7      56       457         3         0
 8      57       431         3         0
 9      58       453         3         0
10      59       423         3         0
11      60       405         3         0
12      61       438         3         0
13      62       413         3         0
14      63       435         3         0
15      64       404         3         0
16      65       420         3         0
17      66       281         3         0
18      67       367         3         0
19      68       387         3         0
20      16      1128         0         0
21      91      2781         0         0
MT=   53 MU FCR    39 TO 162 IS OUTSIDE OF REALITY, -1.0000172E 00
MT=   54 MU FCR    37 TO 169 IS OUTSIDE OF REALITY, -1.0000114E 00
MT=   55 MU FOR    37 TO 170 IS OUTSIDE OF REALITY, -1.0000181E 00
MT=   59 MU FCR    30 TO 167 IS OUTSIDE OF REALITY, -1.0000191E 00
MT=   59 MU FCR    30 TO 170 IS OUTSIDE OF REALITY, -1.0000057E 00
MT=   60 MU FCR    28 TO 165 IS OUTSIDE OF REALITY, -1.0000172E 00
MT=   61 MU FOR    26 TO 171 IS OUTSIDE OF REALITY, -1.0000105E 00
MT=   62 MU FOR    25 TO 164 IS OUTSIDE OF REALITY, -1.0000200E 00
MT=   62 MU FCR    25 TO 171 IS OUTSIDE OF REALITY, -1.0000257E 00
MT=   63 MU FCR    25 TO 166 IS OUTSIDE OF REALITY, -1.0000143E 00
MT=   63 MU FOR    25 TO 171 IS OUTSIDE OF REALITY, -1.0000153E 00
MT=   65 MU FCR    24 TO 168 IS OUTSIDE OF REALITY, -1.0000095E 00
MT=   67 MU FCR    19 TO 167 IS OUTSIDE OF REALITY, -1.0000124E 00
MT=   67 MU FOR    19 TO 170 IS OUTSIDE OF REALITY, -1.0000243E 00
MT=   68 MU FOR    18 TO 101 IS OUTSIDE OF REALITY,  1.0000296E 00
MT=   68 MU FCR    18 TO 164 IS OUTSIDE OF REALITY, -1.0000038E 00
NUCLIDE         1156 HAS BEEN CHECKED
```

FAILS TEST ON MAGNITUDE OF P_1 TERM. THIS IS DUE TO A PRECISION PROBLEM WHEN DATA WERE CONVERTED WITH AIM.

(THE REMAINING RADE OUTPUT HAS BEEN OMITTED)

(END OF RADE OUTPUT)

```
NN        NN   IIIIIIIIIIII   TTTTTTTTTTTT     AAAAAAAAA     WW        WW   LL
NNN       NN   IIIIIIIIIIII   TTTTTTTTTTTT    AAAAAAAAAAA    WW        WW   LL
NNNN      NN       II             TT         AA         AA    WW        WW   LL
NN NN     NN       II             TT         AA         AA    WW        WW   LL
NN  NN    NN       II             TT         AA         AA    WW        WW   LL
NN   NN   NN       II             TT         AAAAAAAAAAAAA    WW   W    WW   LL
NN    NN  NN       II             TT         AAAAAAAAAAAAA    WW  WWW   WW   LL
NN     NN NN       II             TT         AA         AA    WW  WW WW WW   LL
NN      NNNN       II             TT         AA         AA    WW WW   WW WW  LL
NN       NNN   IIIIIIIIIIII       TT         AA         AA    WWWW     WWWW  LL
NN        NN   IIIIIIIIIIII       TT         AA         AA    WWW       WWW  LLLLLLLLLLLLL
                                                                 WW         WW  LLLLLLLLLLLLL
```

NITAWL (CREATE AN AMPX WORKING LIBRARY AND AN ANISN BINARY LIBRARY THE ZPR-6/7 CALCULATION

```
IIIIIIIIIIII          JJ   BBBBBBBBBBBB    22222222222    SSSSSSSSSSS     AAAAAAAAA     MM         MM   PPPPPPPPPPPP
IIIIIIIIIIII          JJ   BBBBBBBBBBBBB  2222222222222  SSSSSSSSSSSSS   AAAAAAAAAAA    MMM       MMM   PPPPPPPPPPPPP
    II                JJ   BB         BB  22         22   SS         SS   AA         AA   MMMM     MMMM   PP         PP
    II                JJ   BB         BB            22   SS              AA         AA   MM MM   MM MM   PP         PP
    II                JJ   BB         BB            22   SS              AA         AA   MM  MM MM  MM   PP         PP
    II                JJ   BBBBBBBBBBBB            22    SSSSSSSSSSSS    AAAAAAAAAAAAA  MM   MMM   MM   PPPPPPPPPPPP
    II                JJ   BBBBBBBBBBBB           22      SSSSSSSSSSSS   AAAAAAAAAAAAA  MM    M    MM   PPPPPPPPPPPP
    II                JJ   BB         BB         22                SS   AA         AA   MM         MM   PP
    II                JJ   BB         BB        22                 SS   AA         AA   MM         MM   PP
    II          JJ    JJ   BB         BB       22          SS      SS   AA         AA   MM         MM   PP
IIIIIIIIIIII    JJJJJJJJJJJJ BBBBBBBBBBBBB  2222222222222  SSSSSSSSSSSSS   AA         AA   MM         MM   PP
IIIIIIIIIIII     JJJJJJJJJJJ  BBBBBBBBBBB   2222222222222   SSSSSSSSSSS    AA         AA   MM         MM   PP

     11            0000000                     11             11                          7777777777777   7777777777777
    111           000000000                   111            111                          7777777777777   7777777777777
   1111          00       00                1111           1111                          77        77    77        77
     11         00         00                 11             11                                 77              77
     11         00         00                 11             11                                77              77
     11         00         00                 11             11                               77              77
     11         00         00                 11             11                               77              77
     11         00         00                 11             11                              77              77
     11         00         00                 11             11                              77              77
     11          00       00                  11             11                             77              77
 11111111         000000000                 11111111       11111111                        77              77
 11111111          0000000                  11111111       11111111                        77              77

 22222222222         11                      5555555555555  33333333333                     0000000        99999999999
2222222222222       111                      5555555555555 3333333333333                   000000000      999999999999
22          22     1111                      55            33          33                00        00   99          99
            22       11                      55                        33               00          00  99          99
            22       11                      55                        33               00          00  99          99
          22         11                      555555555555            333                00          00  999999999999
       22            11              .....   555555555555            333                00          00   99999999999
    22               11              .....                 55          33                00          00            99
 22                  11              .....                 55          33                00          00            99
 2222222222222     11111111                  55          55  33        33                 00        00            99
 2222222222222     11111111                  5555555555555 3333333333333                 000000000      999999999999
                                              55555555555   333333333333                   0000000       99999999999

  0$ ARRAY       9 ENTRIES READ
  1$ ARRAY      12 ENTRIES READ
  0T
MSCM      NUMBER OF EXTRA CROSS SECTIONS                          0
MMT       NUMBER OF NUCLIDES FROM MASTER LIBRARY                 12
MWT       NUMBER OF NUCLIDES FROM X-SECT LIBRARY (LOG 2)          0
MXT       NUMBER OF NUCLIDES FROM X-SECT LIBRARY (LOG 3)          0
MCR       ANISN/DOT/MORSE OUTPUT TRIGGER                          2 <------------ANISN LIBRARY WILL ALSO BE MADE
MXX       TOTAL CROSS SECTION POSITION                            0
MS        WITHIN-GROUP SCATTERING CROSS SECTION POSITION          0
IRES      NUMBER OF RESONANCE CALCULATIONS                        0
IQM       TABLE LENGTH FOR CROSS SECTIONS                         0
IPM       IS AN OLD ANISN LIBRARY MOUNTED ? (0/1 NO/YES)          0
IPP       OUTPUT OPTION TRIGGER                                  -1
IFG       PRINT CONTROL - ANISN OUTPUT                            0
THE STORAGE ALLOCATED FOR THIS CASE IS  59904 WORDS
    2$ ARRAY      12 ENTRIES READ
    0T
GENERAL INFORMATION CONCERNING CROSS SECTION LIBRARY
  TAPE IDENTIFICATION NUMBER                  4321
  NUMBER OF NUCLIDES ON TAPE                    12
  NUMBER OF NEUTRON ENERGY GROUPS              171
  FIRST THERMAL NEUTRON ENERGY GROUP           171
  NUMBER OF GAMMA ENERGY GROUPS                  0
XSDRN TAPE   4321
```


(NITAWL OUTPUT CONTINUED ON NEXT PAGE)

29080

NITAWL OUTPUT (CONTINUED)

CONTENTS OF 171N AMPX MASTER

```
NUCLIDES FROM XSDRN TAPE
    1     MO     CASE FOR COMBINED CTR & CRBR PROCESSING                                  1287
    2     PU241  CASE FOR COMBINED CTR & CRBR PROCESSING FEB '77                          1266
    3      NA CASE FOR REM SHIELDING PROBLEM                                              1156
    4      FE CASE FOR REM SHIELDING PROBLEM                                              1192
    5     U-235  CASE FOR COMBINED CTR & CRBR PROCESSING                                  1261
    6      U-238 CASE FOR COMBINED LIBRARY (CTR & CRBR)   MOD MT=2 TAPE                   9262
    7     PU239  CASE FOR COMBINED CTR & CRBR PROCESSING                                  1264
    8     PU240  CASE FOR COMBINED CTR & CRBR PROCESSING                                  1265
    9     O-16   CASE FOR COMBINED CTR & CRBR PROCESSING                                  1276
   10     CR     CASE FOR COMBINED CTR & CRBR PROCESSING                                  1191
   11      NI    CASE FOR COMBINED CTR & CRBR PROCESSING                                  1190
   12     MN-55  CASE FOR COMBINED CTR & CRBR PROCESSING                                  1197
MO     CASE FOR COMBINED CTR & CRBR PROCESSING                                   1287
PU241  CASE FOR COMBINED CTR & CRBR PROCESSING FEB '77                           1266
 NA CASE FOR REM SHIELDING PROBLEM                                               1156
 FE CASE FOR REM SHIELDING PROBLEM                                               1192
U-235  CASE FOR COMBINED CTR & CRBR PROCESSING                                   1261
 U-238 CASE FOR COMBINED LIBRARY (CTR & CRBR)   MOD MT=2 TAPE                    9262
PU239  CASE FOR COMBINED CTR & CRBR PROCESSING                                   1264
PU240  CASE FOR COMBINED CTR & CRBR PROCESSING                                   1265
O-16   CASE FOR COMBINED CTR & CRBR PROCESSING                                   1276
CR     CASE FOR COMBINED CTR & CRBR PROCESSING                                   1191
 NI    CASE FOR COMBINED CTR & CRBR PROCESSING                                   1190
MN-55  CASE FOR COMBINED CTR & CRBR PROCESSING                                   1197
AN ANISN LIBRARY WILL BE MADE ON TAPE 20
FOR 171 NEUTRON GROUPS AND   0 GAMMA GROUPS
    IHT=  3
    IHS=  4      WHICH ALLOWS 170 DOWNSCATTERS
    ITL=174                    0 UPSCATTERS
THE LIBRARY CONTENTS ARE
  NOG    ITL  ICT     ID                TITLE
  171    174    0      1 P0  DATA FOR MO     CASE FOR COMBINED CTR & CRBR PROCESSING                    XSDRN ID        1287
  171    174    0      2 P1  DATA FOR MO     CASE FOR COMBINED CTR & CRBR PROCESSING                    XSDRN ID        1287
  171    174    0      3 P2  DATA FOR MO     CASE FOR COMBINED CTR & CRBR PROCESSING                    XSDRN ID        1287
  171    174    0      4 P3  DATA FOR MO     CASE FOR COMBINED CTR & CRBR PROCESSING                    XSDRN ID        1287
  171    174    0      5 P0  DATA FOR PU241  CASE FOR COMBINED CTR & CRBR PROCESSING FEB '77            XSDRN ID        1266
  171    174    0      6 P1  DATA FOR PU241  CASE FOR COMBINED CTR & CRBR PROCESSING FEB '77            XSDRN ID        1266
  171    174    0      7 P2  DATA FOR PU241  CASE FOR COMBINED CTR & CRBR PROCESSING FEB '77            XSDRN ID        1266
  171    174    0      8 P3  DATA FOR PU241  CASE FOR COMBINED CTR & CRBR PROCESSING FEB '77            XSDRN ID        1266
  171    174    0      9 P0  DATA FOR  NA CASE FOR REM SHIELDING PROBLEM                                XSDRN ID        1156
  171    174    0     10 P1  DATA FOR  NA CASE FOR REM SHIELDING PROBLEM                                XSDRN ID        1156
  171    174    0     11 P2  DATA FOR  NA CASE FOR REM SHIELDING PROBLEM                                XSDRN ID        1156
  171    174    0     12 P3  DATA FOR  NA CASE FOR REM SHIELDING PROBLEM                                XSDRN ID        1156
  171    174    0     13 P0  DATA FOR  FE CASE FOR REM SHIELDING PROBLEM                                XSDRN ID        1192
  171    174    0     14 P1  DATA FOR  FE CASE FOR REM SHIELDING PROBLEM                                XSDRN ID        1192
  171    174    0     15 P2  DATA FOR  FE CASE FOR REM SHIELDING PROBLEM                                XSDRN ID        1192
  171    174    0     16 P3  DATA FOR  FE CASE FOR REM SHIELDING PROBLEM                                XSDRN ID        1192
  171    174    0     17 P0  DATA FOR U-235 CASE FOR COMBINED CTR & CRBR PROCESSING                     XSDRN ID        1261
  171    174    0     18 P1  DATA FOR U-235 CASE FOR COMBINED CTR & CRBR PROCESSING                     XSDRN ID        1261
  171    174    0     19 P2  DATA FOR U-235 CASE FOR COMBINED CTR & CRBR PROCESSING                     XSDRN ID        1261
  171    174    0     20 P3  DATA FOR U-235 CASE FOR COMBINED CTR & CRBR PROCESSING                     XSDRN ID        1261
  171    174    0     21 P0  DATA FOR  U-238 CASE FOR COMBINED LIBRARY (CTR & CRBR)   MOD MT=2 TAPE    XSDRN ID        9262
  171    174    0     22 P1  DATA FOR  U-238 CASE FOR COMBINED LIBRARY (CTR & CRBR)   MOD MT=2 TAPE    XSDRN ID        9262
  171    174    0     23 P2  DATA FOR  U-238 CASE FOR COMBINED LIBRARY (CTR & CRBR)   MOD MT=2 TAPE    XSDRN ID        9262
  171    174    0     24 P3  DATA FOR  U-238 CASE FOR COMBINED LIBRARY (CTR & CRBR)   MOD MT=2 TAPE    XSDRN ID        9262
  171    174    0     25 P0  DATA FOR PU239 CASE FOR COMBINED CTR & CRBR PROCESSING                     XSDRN ID        1264
  171    174    0     26 P1  DATA FOR PU239 CASE FOR COMBINED CTR & CRBR PROCESSING                     XSDRN ID        1264
  171    174    0     27 P2  DATA FOR PU239 CASE FOR COMBINED CTR & CRBR PROCESSING                     XSDRN ID        1264
  171    174    0     28 P3  DATA FOR PU239 CASE FOR COMBINED CTR & CRBR PROCESSING                     XSDRN ID        1264
  171    174    0     29 P0  DATA FOR PU240 CASE FOR COMBINED CTR & CRBR PROCESSING                     XSDRN ID        1265
  171    174    0     30 P1  DATA FOR PU240 CASE FOR COMBINED CTR & CRBR PROCESSING                     XSDRN ID        1265
  171    174    0     31 P2  DATA FOR PU240 CASE FOR COMBINED CTR & CRBR PROCESSING                     XSDRN ID        1265
  171    174    0     32 P3  DATA FOR PU240 CASE FOR COMBINED CTR & CRBR PROCESSING                     XSDRN ID        1265
  171    174    0     33 P0  DATA FOR O-16  CASE FOR COMBINED CTR & CRBR PROCESSING                     XSDRN ID        1276
  171    174    0     34 P1  DATA FOR O-16  CASE FOR COMBINED CTR & CRBR PROCESSING                     XSDRN ID        1276
  171    174    0     35 P2  DATA FOR O-16  CASE FOR COMBINED CTR & CRBR PROCESSING                     XSDRN ID        1276
  171    174    0     36 P3  DATA FOR O-16  CASE FOR COMBINED CTR & CRBR PROCESSING                     XSDRN ID        1276
  171    174    0     37 P0  DATA FOR CR    CASE FOR COMBINED CTR & CRBR PROCESSING                     XSDRN ID        1191
  171    174    0     38 P1  DATA FOR CR    CASE FOR COMBINED CTR & CRBR PROCESSING                     XSDRN ID        1191
  171    174    0     39 P2  DATA FOR CR    CASE FOR COMBINED CTR & CRBR PROCESSING                     XSDRN ID        1191
  171    174    0     40 P3  DATA FOR CR    CASE FOR COMBINED CTR & CRBR PROCESSING                     XSDRN ID        1191
  171    174    0     41 P0  DATA FOR  NI   CASE FOR COMBINED CTR & CRBR PROCESSING                     XSDRN ID        1190
  171    174    0     42 P1  DATA FOR  NI   CASE FOR COMBINED CTR & CRBR PROCESSING                     XSDRN ID        1190
  171    174    0     43 P2  DATA FOR  NI   CASE FOR COMBINED CTR & CRBR PROCESSING                     XSDRN ID        1190
  171    174    0     44 P3  DATA FOR  NI   CASE FOR COMBINED CTR & CRBR PROCESSING                     XSDRN ID        1190
  171    174    0     45 P0  DATA FOR MN-55 CASE FOR COMBINED CTR & CRBR PROCESSING                     XSDRN ID        1197
  171    174    0     46 P1  DATA FOR MN-55 CASE FOR COMBINED CTR & CRBR PROCESSING                     XSDRN ID        1197
  171    174    0     47 P2  DATA FOR MN-55 CASE FOR COMBINED CTR & CRBR PROCESSING                     XSDRN ID        1197
  171    174    0     48 P3  DATA FOR MN-55 CASE FOR COMBINED CTR & CRBR PROCESSING                     XSDRN ID        1197
```


(NITAWL OUTPUT CONTINUED ON NEXT PAGE)

00083

CONTENTS OF THE 171N ANISN LIBRARY

```
AN ANISN BINARY LIBRARY HAS BEEN MADE ON LOGICAL  3
THE LIBRARY CONTENTS ARE
  NOG    ITL  ICT    ID                TITLE
  171    174    0     1        P0 MO     CASE FOR COMBINED CTR & CRBR PROCESSIN
  171    174    0     2        P1 MO     CASE FOR COMBINED CTR & CRBR PROCESSIN
  171    174    0     3        P2 MO     CASE FOR COMBINED CTR & CRBR PROCESSIN
  171    174    0     4        P3 MO     CASE FOR COMBINED CTR & CRBR PROCESSIN
  171    174    0     5        P0 PU241 CASE FOR COMBINED CTR & CRBR PROCESSIN
  171    174    0     6        P1 PU241 CASE FOR COMBINED CTR & CRBR PROCESSIN
  171    174    0     7        P2 PU241 CASE FOR COMBINED CTR & CRBR PROCESSIN
  171    174    0     8        P3 PU241 CASE FOR COMBINED CTR & CRBR PROCESSIN
  171    174    0     9        P0  NA CASE FOR REM SHIELDING PROBLEM
  171    174    0    10        P1  NA CASE FOR REM SHIELDING PROBLEM
  171    174    0    11        P2  NA CASE FOR REM SHIELDING PROBLEM
  171    174    0    12        P3  NA CASE FOR REM SHIELDING PROBLEM
  171    174    0    13        P0  FE CASE FOR REM SHIELDING PROBLEM
  171    174    0    14        P1  FE CASE FOR REM SHIELDING PROBLEM
  171    174    0    15        P2  FE CASE FOR REM SHIELDING PROBLEM
  171    174    0    16        P3  FE CASE FOR REM SHIELDING PROBLEM
  171    174    0    17        P0 U-235 CASE FOR COMBINED CTR & CRBR PROCESSIN
  171    174    0    18        P1 U-235 CASE FOR COMBINED CTR & CRBR PROCESSIN
  171    174    0    19        P2 U-235 CASE FOR COMBINED CTR & CRBR PROCESSIN
  171    174    0    20        P3 U-235 CASE FOR COMBINED CTR & CRBR PROCESSIN
  171    174    0    21        P0  U-238 CASE FOR COMBINED LIBRARY (CTR & CRBR
  171    174    0    22        P1  U-238 CASE FOR COMBINED LIBRARY (CTR & CRBR
  171    174    0    23        P2  U-238 CASE FOR COMBINED LIBRARY (CTR & CRBR
  171    174    0    24        P3  U-238 CASE FOR COMBINED LIBRARY (CTR & CRBR
  171    174    0    25        P0 PU239 CASE FOR COMBINED CTR & CRBR PROCESSIN
  171    174    0    26        P1 PU239 CASE FOR COMBINED CTR & CRBR PROCESSIN
  171    174    0    27        P2 PU239 CASE FOR COMBINED CTR & CRBR PROCESSIN
  171    174    0    28        P3 PU239 CASE FOR COMBINED CTR & CRBR PROCESSIN
  171    174    0    29        P0 PU240 CASE FOR COMBINED CTR & CRBR PROCESSIN
  171    174    0    30        P1 PU240 CASE FOR COMBINED CTR & CRBR PROCESSIN
  171    174    0    31        P2 PU240 CASE FOR COMBINED CTR & CRBR PROCESSIN
  171    174    0    32        P3 PU240 CASE FOR COMBINED CTR & CRBR PROCESSIN
  171    174    0    33        P0 O-16   CASE FOR COMBINED CTR & CRBR PROCESSIN
  171    174    0    34        P1 O-16   CASE FOR COMBINED CTR & CRBR PROCESSIN
  171    174    0    35        P2 O-16   CASE FOR COMBINED CTR & CRBR PROCESSIN
  171    174    0    36        P3 C-16   CASE FOR COMBINED CTR & CRBR PROCESSIN
  171    174    0    37        P0 CR     CASE FOR COMBINED CTR & CRBR PROCESSIN
  171    174    0    38        P1 CR     CASE FOR COMBINED CTR & CRBR PROCESSIN
  171    174    0    39        P2 CR     CASE FOR COMBINED CTR & CRBR PROCESSIN
  171    174    0    40        P3 CR     CASE FOR COMBINED CTR & CRBR PROCESSIN
  171    174    0    41        P0  NI    CASE FOR COMBINED CTR & CRBR PROCESSIN
  171    174    0    42        P1  NI    CASE FOR COMBINED CTR & CRBR PROCESSIN
  171    174    0    43        P2  NI    CASE FOR COMBINED CTR & CRBR PROCESSIN
  171    174    0    44        P3  NI    CASE FOR COMBINED CTR & CRBR PROCESSIN
  171    174    0    45        P0 MN-55 CASE FOR COMBINED CTR & CRBR PROCESSIN
  171    174    0    46        P1 MN-55 CASE FOR COMBINED CTR & CRBR PROCESSIN
  171    174    0    47        P2 MN-55 CASE FOR COMBINED CTR & CRBR PROCESSIN
  171    174    0    48        P3 MN-55 CASE FOR COMBINED CTR & CRBR PROCESSIN
    7      7    7     7          G    G    G    G    G    G    G    G    G    G    G    G
  ELAPSED TIME   0.39 MIN.
     THIS XSDRN WORKING TAPE WAS CREATED
     THE TITLE OF THE PARENT CASE IS AS FOLLOWS
```

CONTENTS OF THE 171N AMPX WORKING LIBRARY

```
      TAPE ID                          4321          NUMBER OF NUCLIDES                12
      NUMBER OF NEUTRON GROUPS          171          NUMBER OF GAMMA GROUPS             0
      FIRST THERMAL GROUP               171
                              TABLE OF CONTENTS
    MO     CASE FOR COMBINED CTR & CRBR PROCESSING                          ID      1287
    PU241 CASE FOR COMBINED CTR & CRBR PROCESSING FEB '77                   ID      1266
     NA CASE FOR REM SHIELDING PROBLEM                                      ID      1156
     FE CASE FOR REM SHIELDING PROBLEM                                      ID      1192
    U-235 CASE FOR COMBINED CTR & CRBR PROCESSING                           ID      1261
     U-238 CASE FOR COMBINED LIBRARY (CTR & CRBR)  MOD MT=2 TAPE            ID      9262
    PU239 CASE FOR COMBINED CTR & CRBR PROCESSING                           ID      1264
    PU240 CASE FOR COMBINED CTR & CRBR PROCESSING                           ID      1265
    O-16  CASE FOR COMBINED CTR & CRBR PROCESSING                           ID      1276
    CR     CASE FOR COMBINED CTR & CRBR PROCESSING                          ID      1191
     NI    CASE FOR COMBINED CTR & CRBR PROCESSING                          ID      1190
    MN-55 CASE FOR COMBINED CTR & CRBR PROCESSING                           ID      1197
      TAPE COPY USED    2640 I/O'S, AND TOOK     2.12 SECONDS
```

(END OF WITAWL OUTPUT)

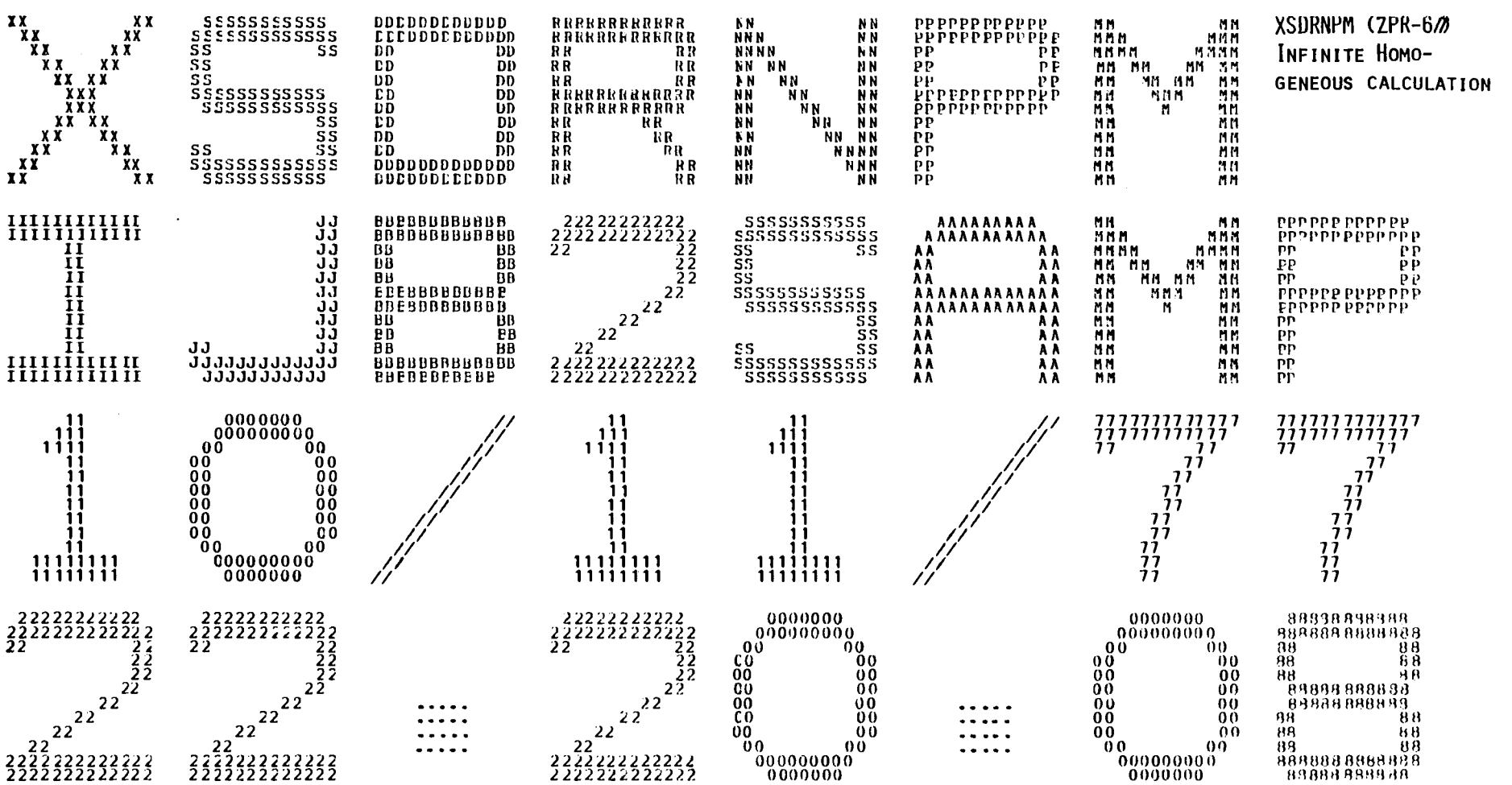

ZPR67 INFINITE MEDIUM CALCULATION VIA DONAMI

(XSDRNPM OUTPUT CONTINUED ON NEXT PAGE)

XSDRNPM OUTPUT (CONTINUED)

```
    6$ ARRAY       6 ENTRIES READ
    1$ ARRAY      15 ENTRIES READ
    OT
          THE FOLLOWING DIRECT ACCESS SPACE IS REQUIRED
    LOGICAL UNIT  8 HAS     500 BLOCKS OF LENGTH  880 WORDS
    LOGICAL UNIT  9 HAS     500 BLOCKS OF LENGTH  880 WORDS
    LOGICAL UNIT 10 HAS       2 BLOCKS OF LENGTH  880 WORDS
GENERAL PROBLEM DESCRIPTION DATA BLOCK
                                GENERAL PROBLEM DATA

IGE   1/2/3 = PLANE/CYLINDER/SPHERE        1        ISN   QUADRATURE ORDER                    4
IZM   NUMBER OF ZONES                      1        ISCT  ORDER OF SCATTERING                 3
IM    NUMBER OF SPACIAL INTERVALS          1        IEVT  0/1/2/3/4/5/6=Q/K/ALPHA/C/Z/R/H     1
IBL   0/1/2/3 = VACUUM/REFL/PER/WHITE      1        IIM   INNER ITERATION MAXIMUM             25
IBR   RIGHT BOUNDARY CONDITION             1        ICM   OUTER ITERATION MAXIMUM             25
MXX   NUMBER OF MIXTURES                   1        ICLC  -1/0/N--FLAT RES/SN/OPT             25
MS    MIXING TABLE LENGTH                 12        ITH   0/1 = FORWARD/ADJOINT                0
IGM   NUMBER OF ENERGY GROUPS            171        IFLU  0/1/2/3/4=L-S/L/S/W/L-W              3
NNG   NUMBER OF NEUTRON GROUPS           171        IPRT  -2/-1/0/N=MIXTURE XSEC PRINT        -1
NGG   NUMBER OF GAMMA GROUPS               0        ID1   0/1/2/3=NO/PRT ND/PCH N/BOTH         0
IFTG  NUMBER OF FIRST THERMAL GROUP      171        IPBT  -1/0/1=NONE/FINE/ALL BAL. PRT        0
                                SPECIAL OPTIONS

IFG   0/1 = NONE/WEIGHTING CALCULATION     0        IPN   DUMMY PARAMETER                      0
IQM   VOLUMETRIC SOURCES (0/N=NO/YES)      0        IDFM  0/1 = NONE/DENSITY FACTORS 38*       0
IPM   BOUNDARY SOURCES (0/N=NO/YES)        0        IAZ   0/N = NONE/N ACTIVITIES BY ZONE       0
IFN   0/1/2 = INPUT 33*/34*/USE LAST       0        IAI   0/1=NONE/ACTIVITIES BY INTERVAL      0
ITMX  MAXIMUM TIME (MINUTES)               0        IFCT  0/1=NO/YES UPSCATTER SCALING         0
IDT1  0/1/2/3=NO/XSECT/SRCE/FLUX--OUT      0        IPVT  0/1/2=NO/K/ALPHA PARAMETRIC SRCH     0
                                FLOATING POINT PARAMETERS

EV    EIGENVALUE GUESS            0.0              PV    IPVT=1/2--K/ALPHA          0.0
EVM   EIGENVALUE MODIFIER         0.0              EPS   OVERALL CONVERGENCE        1.00000E-04
BF    BUCKLING FACTOR=1.420892    1.42089E 00      PTC   POINT CONVERGENCE          1.00000E-04
DY    CYL/PLA HT FOR BUCKLING     0.0              XNF   NORMALIZATION FACTOR       1.00000E 00
DZ    PLANE DEPTH FOR BUCKLING    0.0              EQL   EV CHANGE EES FOR SEARCH   1.00000E-03
VSC   VOID STREAMING CORRECTION   0.0              XNPM  NEW PARAM MOD FOR SEARCH   7.50000E-01
    THIS CASE WILL REQUIRE      31583 LOCATIONS FOR MIXING
    THIS CASE HAS BEEN ALLOCATED  59392 LOCATIONS
                          ZPR67 INFINITE MEDIUM CALCULATION VIA BONAMI
   13$ ARRAY      12 ENTRIES READ
   14$ ARRAY      12 ENTRIES READ
   15* ARRAY      12 ENTRIES READ
    OT
                                DATA BLOCK 2 (MIXING TABLE, ETC.)
     NUCLIDES          CCCC                          MIXING TABLE                          EXTRA
      ON TAPE     IDENTIFICATION              MIXTURE  COMPONENT     ATOM DENSITY       XSECT ID'S
    1    1287                                    1        1264       8.86720E-04
    2    1266                                    1        1265       1.17700E-04
    3    1156                                    1        1266       1.33000E-05
    4    1192                                    1        1261       1.26000E-05
    5    1261                                    1        9262       5.77700E-03
    6    9262                                    1        1287       2.35700E-04
    7    1264                                    1        1156       9.29040E-03
    8    1265                                    1        1276       1.39800E-02
    9    1276                                    1        1192       1.29700E-02
   10    1191                                    1        1191       2.70900E-03
   11    1190                                    1        1190       1.24000E-03
   12    1197                                    1        1197       2.12000E-04
MACROSCOPIC 1-D CROSS SECTIONS FOR MIXTURE   1
```

MIXING TABLE

(XSDRNPM OUTPUT CONTINUED ON NEXT PAGE)

XSDRNPM OUTPUT (CONTINUED)

EDIT OF CROSS SECTIONS

	GRP. 1	GRP. 2	GRP. 3	GRP. 4	GRP. 5	GRP. 6	GRP. 7	GRP. 8
1	0.0	0.0	0.0	0.0	0.0	0.0	0.0	0.0
2	1.18775E-02	1.24409E-02	1.30573E-02	1.29534E-02	1.27727E-02	1.25303E-02	1.21250E-02	1.15506E-02
3	1.33293E-05	2.22465E-05	3.61248E-05	2.53460E-05	3.16621E-05	3.94002E-05	4.84072E-05	1.32087E-04
4	1.03417E-02	1.03183E-02	9.93082E-03	9.72158E-03	9.47697E-03	9.18763E-03	8.95679E-03	8.70628E-03
5	1.55672E-02	1.62119E-02	1.68142E-02	1.68406E-02	1.69145E-02	1.68723E-02	1.67926E-02	1.65962E-02
6	5.15348E-02	5.02184E-02	4.68988E-02	4.54071E-02	4.38193E-02	4.20627E-02	4.05947E-02	3.90192E-02
7	1.20092E-01	1.20339E-01	1.23219E-01	1.23142E-01	1.22494E-01	1.22256E-01	1.22696E-01	1.22780E-01

	GRP. 9	GRP. 10	GRP. 11	GRP. 12	GRP. 13	GRP. 14	GRP. 15	GRP. 16
1	0.0	0.0	0.0	0.0	0.0	0.0	0.0	0.0
2	1.02698E-02	9.83508E-03	9.79631E-03	9.69487E-03	9.55990E-03	9.40729E-03	9.11247E-03	8.60096E-03
3	1.93585E-04	2.78083E-04	3.90034E-04	5.37595E-04	7.26705E-04	9.63456E-04	1.25591E-03	1.61049E-03
4	8.28293E-03	8.08632E-03	8.03932E-03	8.01579E-03	8.00569E-03	8.04437E-03	8.11289E-03	8.15735E-03
5	1.60558E-02	1.64837E-02	1.58683E-02	1.49594E-02	1.57249E-02	1.42560E-02	1.37218E-02	1.34327E-02
6	3.62411E-02	3.45755E-02	3.37068E-02	3.29564E-02	3.22989E-02	3.18491E-02	3.15460E-02	3.11646E-02
7	1.23598E-01	1.26654E-01	1.28473E-01	1.24847E-01	1.27162E-01	1.27715E-01	1.28092E-01	1.30900E-01

	GRP. 17	GRP. 18	GRP. 19	GRP. 20	GRP. 21	GRP. 22	GRP. 23	GRP. 24
1	0.0	0.0	0.0	0.0	0.0	0.0	0.0	0.0
2	7.94892E-03	7.14866E-03	6.18686E-03	4.60253E-03	2.25821E-03	1.11705E-03	5.54206E-04	1.41598E-04
3	2.03292E-03	2.52778E-03	3.09859E-03	3.74769E-03	4.47479E-03	1.66631E-03	3.61044E-03	6.15192E-03
4	8.12855E-03	8.03877E-03	7.92820E-03	7.71665E-03	7.32758E-03	6.99902E-03	6.70630E-03	6.05509E-03
5	1.22845E-02	1.17761E-02	1.13134E-02	1.15612E-02	1.03192E-02	1.03002E-02	1.01724E-02	8.41551E-03
6	3.05326E-02	2.97009E-02	2.88233E-02	2.76280E-02	2.58517E-02	2.44517E-02	2.32639E-02	2.07928E-02
7	1.32852E-01	1.33660E-01	1.37735E-01	1.41012E-01	1.38267E-01	1.40501E-01	1.39600E-01	1.42273E-01

	GRP. 25	GRP. 26	GRP. 27	GRP. 28	GRP. 29	GRP. 30	GRP. 31	GRP. 32
1	0.0	0.0	0.0	0.0	0.0	0.0	0.0	0.0
2	1.52891E-05	3.83423E-06	7.70429E-07	0.0	0.0	0.0	0.0	0.0
3	7.09122E-03	8.08967E-03	9.13284E-03	1.02171E-02	1.13260E-02	1.24461E-02	2.82291E-02	3.25152E-02
4	5.41238E-03	5.06148E-03	4.95573E-03	4.93530E-03	4.95134E-03	4.98277E-03	5.02421E-03	5.04684E-03
5	7.61824E-03	6.46406E-03	6.17681E-03	7.84727E-03	6.80974E-03	6.70004E-03	6.99494E-03	5.99113E-03
6	1.83751E-02	1.69990E-02	1.64515E-02	1.61925E-02	1.60600E-02	1.59857E-02	1.58681E-02	1.56412E-02
7	1.46974E-01	1.51984E-01	1.48292E-01	1.55752E-01	1.52331E-01	1.55167E-01	1.62189E-01	1.72674E-01

	GRP. 33	GRP. 34	GRP. 35	GRP. 36	GRP. 37	GRP. 38	GRP. 39	GRP. 40
1	0.0	0.0	0.0	0.0	0.0	0.0	0.0	0.0
2	0.0	0.0	0.0	0.0	0.0	0.0	0.0	0.0
3	3.64339E-02	1.95172E-02	2.03000E-02	2.09721E-02	2.15568E-02	2.20549E-02	2.24514E-02	1.51376E-02
4	5.02061E-03	5.00768E-03	5.00841E-03	5.03833E-03	5.06842E-03	5.09620E-03	5.12370E-03	5.13607E-03
5	5.56530E-03	5.48817E-03	5.44016E-03	5.46663E-03	5.46538E-03	5.47825E-03	5.50292E-03	5.50855E-03
6	1.52995E-02	1.50838E-02	1.49748E-02	1.49501E-02	1.49287E-02	1.49046E-02	1.48848E-02	1.48468E-02
7	1.80015E-01	1.73566E-01	1.53816E-01	1.49477E-01	1.51193E-01	1.49117E-01	1.56637E-01	1.51901E-01

	GRP. 41	GRP. 42	GRP. 43	GRP. 44	GRP. 45	GRP. 46	GRP. 47	GRP. 48
1	0.0	0.0	0.0	0.0	0.0	0.0	0.0	0.0
2	0.0	0.0	0.0	0.0	0.0	0.0	0.0	0.0
3	3.82494E-03	3.80512E-03	7.64427E-03	1.53263E-02	2.30824E-02	2.31108E-02	2.30627E-02	2.29238E-02
4	5.13828E-03	5.13856E-03	5.13905E-03	5.13719E-03	5.12918E-03	5.10130E-03	5.01974E-03	4.87792E-03
5	5.51422E-03	5.51835E-03	5.52525E-03	5.52310E-03	5.50024E-03	5.48483E-03	5.42013E-03	5.29897E-03
6	1.48185E-02	1.48052E-02	1.47860E-02	1.47395E-02	1.46486E-02	1.44930E-02	1.41996E-02	1.37550E-02
7	1.33685E-01	1.24708E-01	1.38467E-01	1.41251E-01	1.50891E-01	1.58478E-01	1.54541E-01	1.54223E-01

	GRP. 49	GRP. 50	GRP. 51	GRP. 52	GRP. 53	GRP. 54	GRP. 55	GRP. 56
1	0.0	0.0	0.0	0.0	0.0	0.0	0.0	0.0
2	0.0	0.0	0.0	0.0	0.0	0.0	0.0	0.0
3	2.27009E-02	2.24012E-02	2.20605E-02	2.16637E-02	2.12190E-02	2.06750E-02	2.01905E-02	1.95625E-02
4	4.68269E-03	4.44220E-03	4.16431E-03	3.78429E-03	3.28154E-03	2.68342E-03	2.28210E-03	2.10561E-03
5	5.12591E-03	4.91437E-03	4.66615E-03	4.32410E-03	3.85856E-03	3.29380E-03	2.92463E-03	2.78180E-03
6	1.31764E-02	1.24891E-02	1.17142E-02	1.06883E-02	9.36015E-03	7.80118E-03	6.75141E-03	6.27534E-03
7	1.47585E-01	1.48751E-01	1.58944E-01	1.54172E-01	1.57784E-01	1.57310E-01	2.01982E-01	1.75079E-01

	GRP. 57	GRP. 58	GRP. 59	GRP. 60	GRP. 61	GRP. 62	GRP. 63	GRP. 64
1	0.0	0.0	0.0	0.0	0.0	0.0	0.0	0.0
2	0.0	0.0	0.0	0.0	0.0	0.0	0.0	0.0
3	1.90150E-02	1.83673E-02	3.48084E-02	1.37551E-02	1.84593E-02	1.51209E-02	1.44723E-02	1.38251E-02

(REMAINDER OF CROSS SECTION EDIT OMITTED) .

```
  ELAPSED TIME    0.12 MIN.
IDAT1=0 REQUIRES    62631 LOCATIONS. THIS VERSION OF XSDRN ALLOWS A MAXIMUM OF    59392
 CROSS SECTIONS WILL BE STORED EXTERNALLY
    4008 LOCATIONS WILL BE USED
```

(XSDRNPM OUTPUT CONTINUED ON NEXT PAGE)

XSDRNPM OUTPUT (CONTINUED)

```
33* ARRAY     171 ENTRIES READ
 OT
35* ARRAY       2 ENTRIES READ
36$ ARRAY       1 ENTRIES READ
39$ ARRAY       1 ENTRIES READ
40$ ARRAY       1 ENTRIES READ
46$ ARRAY     171 ENTRIES READ
 OT
```

ZPR67 INFINITE MEDIUM CALCULATION VIA BONAMI
NEUTRON GROUP PARAMETERS

GP	ENERGY BOUNDARIES	LETHARGY BOUNDARIES	MID PT VELOCITIES	BROAD GP NUMBERS	CALC TYPE	RIGHT ALBEDO	LEFT ALBEDO
1	1.73330E 07	-5.50027E-01	5.68678E 09	0	2		
2	1.64870E 07	-4.99987E-01	5.54632E 09	0	2		
3	1.56830E 07	-4.49992E-01	5.40937E 09	0	2		
4	1.49180E 07	-3.99983E-01	5.30891E 09	0	2		
5	1.45500E 07	-3.75006E-01	5.24302E 09	0	2		
6	1.41910E 07	-3.50023E-01	5.17785E 09	0	2		
7	1.38400E 07	-3.24978E-01	5.11354E 09	0	2		
8	1.34990E 07	-3.00031E-01	5.01855E 09	0	2		
9	1.28400E 07	-2.49980E-01	4.89461E 09	0	2		
10	1.22140E 07	-1.99998E-01	4.77374E 09	0	2		
11	1.16180E 07	-1.49971E-01	4.65592E 09	0	2		
12	1.10520E 07	-1.00026E-01	4.54103E 09	0	2		
13	1.05130E 07	-5.00275E-02	4.42888E 09	0	2		
14	1.00000E 07	0	4.31950E 09	0	2		
15	9.51230E 06	4.99985E-02	4.21286E 09	0	2		
16	9.04840E 06	9.99968E-02	4.10884E 09	0	2		
17	8.60710E 06	1.49997E-01	4.00739E 09	0	2		
18	8.18730E 06	2.00000E-01	3.90845E 09	0	2		
19	7.78800E 06	2.50001E-01	3.81195E 09	0	2		
20	7.40820E 06	2.99998E-01	3.71783E 09	0	2		
21	7.04690E 06	3.49997E-01	3.62604E 09	0	2		
22	6.70320E 06	4.00000E-01	3.56610E 09	0	2		
23	6.59240E 06	4.16668E-01	3.52181E 09	0	2		
24	6.37630E 06	4.49997E-01	3.44919E 09	0	2		
25	6.06530E 06	5.00001E-01	3.36403E 09	0	2		
26	5.76950E 06	5.49999E-01	3.28097E 09	0	2		
27	5.48810E 06	6.00003E-01	3.19997E 09	0	2		
28	5.22050E 06	6.49992E-01	3.12097E 09	0	2		
29	4.96590E 06	6.99990E-01	3.04391E 09	0	2		
30	4.72370E 06	7.49993E-01	2.96875E 09	0	2		
31	4.49330E 06	7.99998E-01	2.85948E 09	0	2		
32	4.06570E 06	8.99999E-01	2.72002E 09	0	2		
33	3.67880E 06	9.99998E-01	2.58736E 09	0	2		
34	3.32870E 06	1.10000E 00	2.49214E 09	0	2		
35	3.16640E 06	1.14999E 00	2.43060E 09	0	2		
36	3.01190E 06	1.20001E 00	2.37057E 09	0	2		
37	2.86500E 06	1.25002E 00	2.31205E 09	0	2		
38	2.72530E 06	1.30001E 00	2.25497E 09	0	2		
39	2.59240E 06	1.35000E 00	2.19931E 09	0	2		
40	2.46600E 06	1.39999E 00	2.15398E 09	0	2		
41	2.38520E 06	1.43330E 00	2.13165E 09	0	2		
42	2.36530E 06	1.44168E 00	2.12277E 09	0	2		
43	2.34570E 06	1.45000E 00	2.10954E 09	0	2		
44	2.30690E 06	1.46668E 00	2.08334E 09	0	2		
45	2.23130E 06	1.50000E 00	2.04039E 09	0	2		
46	2.12250E 06	1.54999E 00	1.99002E 09	0	2		
47	2.01900E 06	1.59998E 00	1.94089E 09	0	2		
48	1.92050E 06	1.65000E 00	1.89295E 09	0	2		

INFINITE HOMOGENEOUS OPTION FOR FLUX CALCULATION (ALL GROUPS)

(REMAINDER OF NEUTRON GROUP PARAMETERS OMITTED)

(XSDRNPM OUTPUT CONTINUED ON NEXT PAGE)

XSDRNPM OUTPUT (CONTINUED)

```
                                ZPR67 INFINITE MEDIUM CALCULATION VIA BONAMI
          MIXTURE     ORDER P(L)          ACTIVITY TABLE                          QUADRATURE CONSTANTS
          BY ZONE      BY ZONE      MATL NO.      REACTION          WEIGHTS     DIRECTIONS    REFL DIREC     WT X COS
    1        1            0                                              0        -1.00000E 00     5              0
    2                                                              2.50000E-01  -7.88675E-01     5        -1.97169E-01
    3                                                              2.50000E-01  -2.11325E-01     4        -5.28312E-02
    4                                                              2.50000E-01   2.11325E-01     3         5.28312E-02
    5                                                              2.50000E-01   7.88675E-01     2         1.97169E-01
CONSTANTS FOR P( 3) SCATTERING
 ANGL     SET  1        SET  2        SET  3
    1 -1.00000E 00   1.00000E 00  -9.99999E-01
    2 -7.88675E-01   4.33012E-01  -4.33921E-02
    3 -2.11325E-01  -4.33013E-01   2.93394E-01
    4  2.11325E-01  -4.33013E-01  -2.93394E-01
    5  7.88675E-01   4.33012E-01   4.33921E-02
  INT      RADII        MID PTS      ZONE NO.        AREAS        VOLUMES      DENS FACT     RADIUS MOD      SPEC(INT)
    1        0        5.00000E-01       1        1.00000E 00   1.00000E 00                      0
    2   1.00000E 00                              1.00000E 00
  ELAPSED TIME    0.15 MIN.
 OUTER INNER        BALANCE     UPSCATTER RATIO     EIGENVALUE        LAMBDA1          LAMBDA2   TIME(MIN)
     1     0    1.0000353E 00    0.0               1.2136192E 00   1.2135324E 00    0.0              0.2268
     2     0    1.0000343E 00    0.0               1.2136116E 00   1.0000515E 00    1.0000267E 00    0.2958
     3     0    1.0000353E 00    0.0               1.2136126E 00   9.9998152E-01    9.9997473E-01    0.3643
          FINAL MINITOR          LAMBDA   1.2135725E 00          ANGULAR FLUX ON    16
  ELAPSED TIME    0.36 MIN.
ZPR67 INFINITE MEDIUM CALCULATION VIA BONAMI
 INT. ZONE NUMBER      RADIUS      INT. MIDPOINT     AREA          VOLUME      PROD DENSITY
    1        1            0         5.00000E-01   1.00000E 00   1.00000E 00   1.21357E 00
    2                  1.00000E 00                 1.00000E 00
                                ZPR67 INFINITE MEDIUM CALCULATION VIA BONAMI
 TOTAL FLUX
 INT.    GRP.  1        GRP.  2        GRP.  3        GRP.  4        GRP.  5        GRP.  6        GRP.  7        GRP.  8
    1  1.91548E-04    3.35515E-04    4.80742E-04    4.09075E-04    4.95647E-04    6.15657E-04    7.54436E-04    2.13356E-03
 INT.    GRP.  9        GRP. 10        GRP. 11        GRP. 12        GRP. 13        GRP. 14        GRP. 15        GRP. 16
    1  2.96059E-03    4.07998E-03    5.70784E-03    8.26212E-03    1.09585E-02    1.46000E-02    1.94121E-02    2.45725E-02
 INT.    GRP. 17        GRP. 18        GRP. 19        GRP. 20        GRP. 21        GRP. 22        GRP. 23        GRP. 24
    1  3.08858E-02    3.90477E-02    4.79424E-02    5.68403E-02    7.11210E-02    2.66864E-02    5.95057E-02    1.00440E-01
 INT.    GRP. 25        GRP. 26        GRP. 27        GRP. 28        GRP. 29        GRP. 30        GRP. 31        GRP. 32
    1  1.12679E-01    1.28855E-01    1.54233E-01    1.66846E-01    1.93012E-01    2.12464E-01    4.82669E-01    5.38981E-01
 INT.    GRP. 33        GRP. 34        GRP. 35        GRP. 36        GRP. 37        GRP. 38        GRP. 39        GRP. 40
    1  6.25381E-01    3.82260E-01    4.77369E-01    4.95282E-01    5.30566E-01    6.07779E-01    6.09787E-01    4.34253E-01
 INT.    GRP. 41        GRP. 42        GRP. 43        GRP. 44        GRP. 45        GRP. 46        GRP. 47        GRP. 48
    1  1.28861E-01    1.37040E-01    2.49786E-01    4.80254E-01    6.47496E-01    6.18670E-01    6.54789E-01    6.94856E-01
 INT.    GRP. 49        GRP. 50        GRP. 51        GRP. 52        GRP. 53        GRP. 54        GRP. 55        GRP. 56
    1  7.90757E-01    8.08685E-01    7.66452E-01    8.34658E-01    8.91606E-01    9.44935E-01    7.82127E-01    9.72868E-01
 INT.    GRP. 57        GRP. 58        GRP. 59        GRP. 60        GRP. 61        GRP. 62        GRP. 63        GRP. 64
    1  1.13827E 00    1.03626E 00    1.61176E 00    6.37507E-01    1.11076E 00    1.05481E 00    1.38314E 00    1.40029E 00
 INT.    GRP. 65        GRP. 66        GRP. 67        GRP. 68        GRP. 69        GRP. 70        GRP. 71        GRP. 72
    1  1.50042E 00    1.51147E 00    1.54238E 00    1.77077E 00    1.91949E 00    1.98590E 00    2.04100E 00    2.21913E 00
 INT.    GRP. 73        GRP. 74        GRP. 75        GRP. 76        GRP. 77        GRP. 78        GRP. 79        GRP. 80
    1  2.24421E 00    3.39451E 00    2.52017E 00    1.33353E 00    1.64788E 00    3.99455E 00    4.46992E 00    4.90058E-01
 INT.    GRP. 81        GRP. 82        GRP. 83        GRP. 84        GRP. 85        GRP. 86        GRP. 87        GRP. 88
    1  1.95994E-01    4.39432E-01    1.09955E 00    2.06924E 00    4.42857E 00    2.10176E 00    2.18921E 00    2.20269E 00
 INT.    GRP. 89        GRP. 90        GRP. 91        GRP. 92        GRP. 93        GRP. 94        GRP. 95        GRP. 96
    1  1.97897E 00    2.00949E 00    2.33924E 00    2.80236E 00    2.20087E 00    2.32674E 00    2.17675E 00    1.71829E 00
 INT.    GRP. 97        GRP. 98        GRP. 99        GRP.100        GRP.101        GRP.102        GRP.103        GRP.104
    1  2.49968E 00    2.46892E 00    2.45758E 00    2.44391E 00    2.22460E 00    4.88655E 00    5.26028E 00    1.43530E 00
 INT.    GRP.105        GRP.106        GRP.107        GRP.108        GRP.109        GRP.110        GRP.111        GRP.112
    1  2.29391E 00    3.80311E 00    3.24547E 00    7.14523E 00    1.83972E 00    4.81524E 00    4.79418E 00    5.69659E 00
 INT.    GRP.113        GRP.114        GRP.115        GRP.116        GRP.117        GRP.118        GRP.119        GRP.120
    1  2.12440E 00    1.59175E 00    6.65648E-01    1.45584E 00    2.73891E 00    1.08115E 00    8.93106E-01    2.59292E 00
 INT.    GRP.121        GRP.122        GRP.123        GRP.124        GRP.125        GRP.126        GRP.127        GRP.128
    1  4.21535E 00    5.95866E 00    5.91207E 00    4.95686E 00    3.45836E 00    3.13326E 00    2.43005E 00    1.04103E 00
 INT.    GRP.129        GRP.130        GRP.131        GRP.132        GRP.133        GRP.134        GRP.135        GRP.136
    1  4.43989E-01    1.98798E-01    8.19640E-02    6.51789E-02    1.15272E-01    4.31112E-01    7.37397E-01    2.37298E 00
 INT.    GRP.137        GRP.138        GRP.139        GRP.140        GRP.141        GRP.142        GRP.143        GRP.144
    1  2.15883E 00    1.73788E 00    1.35308E 00    1.02312E 00    7.02338E-01    4.38785E-01    3.55852E-01    2.32517E-01
 INT.    GRP.145        GRP.146        GRP.147        GRP.148        GRP.149        GRP.150        GRP.151        GRP.152
    1  1.57687E-01    9.29213E-02    4.51691E-02    2.99156E-02    1.40508E-02    6.37078E-03    2.65700E-03    1.96267E-03
 INT.    GRP.153        GRP.154        GRP.155        GRP.156        GRP.157        GRP.158        GRP.159        GRP.160
    1  1.32924E-03    4.30369E-04    1.51427E-04    4.99407E-05    3.23077E-05    6.93030E-06    3.46718E-06    2.88738E-06
 INT.    GRP.161        GRP.162        GRP.163        GRP.164        GRP.165        GRP.166        GRP.167        GRP.168
    1  2.63543E-06    2.27063E-06    1.74411E-06    1.21037E-06    3.89601E-07    3.80154E-08    9.13696E-08    7.77493E-08
 INT.    GRP.169        GRP.170        GRP.171
    1  2.87069E-08    3.09086E-08    5.64282E-09
  ELAPSED TIME    0.37 MIN.
```

RESULT FOR ZPR-6/7 K-CALCULATION

(XSDRNPM OUTPUT CONTINUED ON NEXT PAGE)

XSDRNPM OUTPUT (CONTINUED)

FINE GROUP SUMMARY FOR SYSTEM

GRP.	FIX SOURCE	FISS SOURCE	IN SCATTER	SLF SCATTER	OUT SCATTER	ABSORPTION	LEAKAGE	BALANCE
1	0.0	1.33293E-05	0.0	9.67389E-06	1.48506E-05	2.98185E-06	0.0	8.55492E-01
2	0.0	2.22465E-05	1.45968E-06	1.66693E-05	2.59803E-05	5.43935E-06	0.0	8.60076E-01
3	0.0	3.61248E-05	3.11491E-06	1.99969E-05	4.14327E-05	8.09330E-06	0.0	8.84219E-01
4	0.0	2.53460E-05	7.44619E-06	1.75821E-05	3.42478E-05	6.88906E-06	0.0	8.87126E-01
5	0.0	3.16620E-05	7.01279E-06	2.20390E-05	3.99064E-05	8.38364E-06	0.0	8.89415E-01
6	0.0	3.94002E-05	7.49442E-06	2.83730E-05	4.78011E-05	1.03875E-05	0.0	8.92523E-01
7	0.0	4.84071E-05	7.99160E-06	3.61674E-05	5.65991E-05	1.26690E-05	0.0	8.97592E-01
8	0.0	1.32087E-04	1.36932E-05	1.16178E-04	1.43513E-04	3.54091E-05	0.0	8.97930E-01
9	0.0	1.93585E-04	1.66592E-05	1.55677E-04	1.99075E-04	4.75346E-05	0.0	9.20401E-01
10	0.0	2.78082E-04	2.90373E-05	2.09625E-04	2.81962E-04	6.72532E-05	0.0	9.35863E-01
11	0.0	3.90033E-04	4.61970E-05	2.97074E-04	4.01618E-04	9.05734E-05	0.0	9.39725E-01
12	0.0	5.37594E-04	6.67347E-05	4.27168E-04	5.60838E-04	1.23596E-04	0.0	9.37843E-01
13	0.0	7.26704E-04	9.06608E-05	5.76139E-04	7.49788E-04	1.72322E-04	0.0	9.39783E-01
14	0.0	9.63455E-04	1.26743E-04	7.74444E-04	1.01939E-03	2.08138E-04	0.0	9.40746E-01
15	0.0	1.25591E-03	1.85843E-04	1.04477E-03	1.35227E-03	2.66368E-04	0.0	9.42202E-01
16	0.0	1.61049E-03	2.55681E-04	1.35037E-03	1.74745E-03	3.30075E-04	0.0	9.46407E-01
17	0.0	2.03292E-03	3.34436E-04	1.73587E-03	2.23346E-03	3.79416E-04	0.0	9.50701E-01
18	0.0	2.52778E-03	4.45446E-04	2.24588E-03	2.79256E-03	4.59829E-04	0.0	9.55159E-01
19	0.0	3.09859E-03	6.16213E-04	2.88851E-03	3.46904E-03	5.42391E-04	0.0	9.61608E-01
20	0.0	3.74769E-03	7.67007E-04	3.50046E-03	4.11911E-03	6.57144E-04	0.0	9.71849E-01
21	0.0	4.47478E-03	9.91343E-04	4.36758E-03	4.89273E-03	7.33910E-04	0.0	9.85530E-01
22	0.0	1.66631E-03	6.65153E-04	1.41800E-03	2.08641E-03	2.74877E-04	0.0	9.93646E-01
23	0.0	3.61044E-03	1.11126E-03	3.58527E-03	4.14919E-03	6.05315E-04	0.0	9.96538E-01
24	0.0	6.15191E-03	1.64500E-03	6.43294E-03	6.96566E-03	8.45252E-04	0.0	9.99103E-01
25	0.0	7.09121E-03	1.96625E-03	7.50339E-03	8.20059E-03	8.58413E-04	0.0	9.99914E-01
26	0.0	8.08966E-03	2.55190E-03	8.94233E-03	9.80906E-03	8.32926E-04	0.0	9.99980E-01
27	0.0	9.13283E-03	3.21736E-03	1.05213E-02	1.13975E-02	9.52670E-04	0.0	1.00000E 00
28	0.0	1.02170E-02	4.04536E-03	1.17242E-02	1.29529E-02	1.30928E-03	0.0	1.00001E 00
29	0.0	1.13259E-02	4.61680E-03	1.34590E-02	1.46284E-02	1.31436E-03	0.0	9.99998E-01
30	0.0	1.24461E-02	5.22223E-03	1.52990E-02	1.62444E-02	1.42352E-03	0.0	1.00001E 00
31	0.0	2.82290E-02	9.90197E-03	4.00627E-02	3.48444E-02	3.37624E-03	0.0	1.00000E 00
32	0.0	3.25152E-02	1.35924E-02	4.69604E-02	4.28784E-02	3.22911E-03	0.0	1.00000E 00
33	0.0	3.64339E-02	1.87735E-02	5.73701E-02	5.17265E-02	3.48043E-03	0.0	1.00000E 00
34	0.0	1.95172E-02	1.81152E-02	2.87150E-02	3.55342E-02	2.09791E-03	0.0	1.00000E 00
35	0.0	2.03000E-02	1.99199E-02	3.32068E-02	3.76230E-02	2.59696E-03	0.0	1.00000E 00
36	0.0	2.09720E-02	2.06861E-02	3.23753E-02	3.89507E-02	2.70753E-03	0.0	9.99999E-01
37	0.0	2.15568E-02	2.35129E-02	3.51480E-02	4.21693E-02	2.89975E-03	0.0	1.00001E 00
38	0.0	2.20549E-02	2.88759E-02	3.96993E-02	4.76007E-02	3.32957E-03	0.0	1.00000E 00

FISSION SOURCE USED IN JOB3 ANISN RUN

(REMAINDER OF SUMMARY TABLE OMITTED)

(END OF XSDRNPM OUTPUT)

DLC-41: JCL AND INPUT DATA FOR JOB3 OF THE ZPR-6/7 SAMPLE PROBLEM

GIP (PREPARE MACROSCOPIC GROUP INDEPENDENT TAPE FOR ANISN)

```
//IJB2ASAM JOB (15334),'J B WRIGHT 6025'
//GIP EXEC FORTHCLG,REGION.GO=250K,LIB=FORT
//SYSPRINT DD DUMMY
//FORT.SYSIN DD UNIT=TAPE9,DISP=(OLD,PASS),
// VOL=SER=RR0002,LABEL=(1,NL),
// DCB=(RECFM=FB,LRECL=80,BLKSIZE=3200)
//GO.FT06F001 DD SYSOUT=A,DCB=(RECFM=FBA,LRECL=133,BLKSIZE=3458)
//GO.FT09F001 DD UNIT=TAPE9,DISP=(OLD,PASS),
// VOL=SER=X15608,
// LABEL=(1,NL),
// DCB=(RECFM=VBS,LRECL=X,BLKSIZE=3520)
//GO.FT08F001 DD UNIT=SYSDA,
// DCB=(RECFM=VBS,LRECL=X,BLKSIZE=3520,BUFL=4000),
//   SPACE=(3520,(2000,50)),DSN=&&GIP00,DISP=(NEW,PASS)
//FT01F001 DD UNIT=SYSDA,DISP=(NEW,DELETE),
//   SPACE=(3504,(300,300)),DCB=(LRECL=700,BLKSIZE=3504,RECFM=VBS)
//FT02F001 DD UNIT=SYSDA,DISP=(NEW,DELETE),
//   SPACE=(3504,(300,300)),DCB=(LRECL=700,BLKSIZE=3504,RECFM=VBS)
//FT03F001 DD UNIT=SYSDA,DISP=(NEW,DELETE),
//   SPACE=(3504,(300,300)),DCB=(LRECL=700,BLKSIZE=3504,RECFM=VBS)
//FT04F001 DD UNIT=SYSDA,DISP=(NEW,DELETE),
//   SPACE=(3504,(300,300)),DCB=(LRECL=700,BLKSIZE=3504,RECFM=VBS)
//GO.FT05F001 DD *
ZPR-6/7 INFINITE MEDIUM RUN WITH GIP
1$$ 171 3 4 174 12 0 12 13 0 0 1 2 0 E 1
10$$ F 13
11$$ 1 2 3 4 5 6 7 8 9 10 11 12
12**
 2.357-4 1.33-5 9.2904-3 1.297-2 1.28-5 5.777-3
  8.8672-4 1.177-4 1.398-2 2.709-3 1.24-3 2.12-4
13$$ 1 5 9 13 17 21 25 29 33 37 41 45 T
```

GIP SOURCE PROGRAM

171N ANISN LIBRARY FROM NITAWL

171N GROUP INDEPENDENT TAPE (1 MAT)

ANISN (ZPR-6/7 INFINITE HOMOGENEOUS MEDIUM CALCULATION)

```
//ANISN EXEC FORTHCLG,PARM.LKED='LET,OVLY',REGION.GO=300K,LIB=FORT
//SYSPRINT DD DUMMY
//FORT.SYSIN DD UNIT=TAPE9,DISP=(OLD,PASS),
// VOL=SER=RR0002,LABEL=(2,NL),
// DCB=(RECFM=FB,LRECL=80,BLKSIZE=3200)
//LKED.SYSIN DD *
      ENTRY MAIN
 OVERLAY LEVEL1
 INSERT PLSNT,FIDO,TP,ADJNT,S804,S805,S814,WOT8,S966,FFREAD
 OVERLAY LEVEL1
 OVERLAY LEVEL1
 INSERT FINPR,FINPR1,PUNSH,DTFEUN,FLTFX
 OVERLAY LEVEL2
 INSERT BT,SUMARY,FACTOR
 OVERLAY LEVEL2
 INSERT FEWG,WATE
//GO.FT06F001 DD SYSOUT=A,DCB=(RECFM=FBA,LRECL=133,BLKSIZE=3458)
//GO.FT01F001 DD UNIT=SYSDA,SPACE=(TRK,(900,50)),
// DCB=(RECFM=VBS,LRECL=X,BLKSIZE=3520,BUFL=4000)
//GO.FT02F001 DD UNIT=SYSDA,SPACE=(TRK,(900,50)),
// DCB=(RECFM=VBS,LRECL=X,BLKSIZE=3520,BUFL=4000)
//GO.FT04F001 DD UNIT=SYSDA,
// DCB=(RECFM=VBS,LRECL=X,BLKSIZE=3520,BUFL=4000),
//   SPACE=(3520,(2000,50)),DSN=&&GIP00,DISP=(OLD,PASS)
//GO.FT08F001 DD DUMMY
//GO.FT09F001 DD DUMMY
//GO.FT05F001 DD *
 ZPR-6/7 INFINITE MEDIUM RUN WITH ANISN
15$$ 1 0 0 2 1  1 1 1 1 1  171 3 4 174 0  0 1 1 0 0  0 0 0 25 0
 1 0 0 25 1 25 0 3 0 1 0
16** 2Z 1.-4 1.42089 3Z 1.0 0.0 0.5 1.-4 0.0 1.-3 .75  T
2** F 1. T
1**
1.33-5 2.22-5 3.605-5 2.53-5 3.16-5 3.93-5 4.83-5 1.32-4 1.93-4 2.78-4
 3.895-4 5.37-4 7.26-4 9.62-4 1.25-3 1.61-3 2.03-3 2.52-3 3.096-3 3.74-3
 4.47-3 1.665-3 3.61-3 6.15-3 7.09-3 8.085-3 9.13-3 1.02-2 1.13-2 1.24-2
2.82-2 3.25-2 3.64-2 1.95-2 2.03-2 2.097-2 2.15-2 2.205-2 2.24-2 1.51-2
3.82-3  3.805-3 7.64-3 1.53-2 2.31-2 2.31-2 2.31-2 2.29-2 2.27-2 2.24-2
2.21-2 2.17-2 2.12-2 2.07-2 2.02-2 1.96-2 1.9-2 1.84-2 3.48-2 1.38-2
1.85-2 1.51-2 1.45-2 1.38-2 1.32-2 1.26-2 1.2-2 1.14-2 1.08-2 1.02-2
9.69-3 9.17-3 8.67-3 1.59-2 1.41-2 6.46-3 6.08-3 1.11-2 9.78-3 1.05-3
3.93-4 8.09-4 2.18-3 4.16-3 7.55-3 3.42-3 3.2-3 2.99-3 2.8-3 2.61-3
2.44-3 2.28-3 2.13-3 1.99-3 1.85-3 1.73-3 1.61-3 1.5-3 1.4-3 1.3-3
1.22-3 2.69-3 2.25-3 7.54-4 5.53-4 1.34-3 7.96-4 1.77-3 6.30-4 9.07-4
7.55-4 8.49-4 3.02-4 3.88-4 1.68-4 1.03-4 1.36-4 6.46-5 6.22-5 1.73-4
2.49-4 3.79-4 2.61-4 1.8-4 1.24-4 8.52-5 5.86-5 2.6-5 1.44-5 1.24-5
1.06-5 4.75-6 4.4-6 7.88-6 6.78-6 1.31-5 9.01-6 6.2-6 4.26-6 2.93-6
2.01-6 1.38-6 9.51-7 6.53-7 4.49-7 3.09-7 2.12-7 1.46-7 1.-7 6.89-8
4.73-8 3.19-8 2.30-8 1.54-8 1.06-8 7.26-9 4.99-9 3.43-9 2.36-9 1.62-9
1.11-9 7.76-10 5.15-10 3.62-10 2.48-10 1.71-10 1.17-10 8.07-11 5.54-11
 1.07-10 1.44-11
```

171N GROUP INDEPENDENT TAPE FROM GIP (1 MAT)

FISSION SOURCE FROM XSDRNPM RUN

DLC-41: OUTPUT FROM JOB3 OF ZPR-6/7 SAMPLE PROBLEM (1 OF 4)

```
* * * PROBLEM BEGAN ON 77/77/77 (  0 ) AT TIME    HRS,  0.0 MIN. * * *

GROUP INPUT PROGRAM - - - - -ZPR-6/7 INFINITE MEDIUM RUN WITH GIP
    1$ ARRAY      21 ENTRIES READ
    OT
 IGM   NO. OF GROUPS                                  171
 IHT   SIGMA(T) POSITION                                3
 IHS   SIGMA(G--G) POSITION                             4
 IHM   TABLE LENGTH                                   174
 MS    MIXING TABLE LENGTH                             12
 MCR   NO. OF MATERIALS FROM CARDS                      0
 MTP   NO. OF MATERIALS FROM LIB. TAPE                 12
 MTM   NO. OF MATERIALS (MCR+MTP+MIXTURES)             13
 ITH   0=DIRECT SOLUTION, 1=ADJOINT                     0
 ISCT  ORDER OF SCATTERING EXPANSION                    0
 IPRT  0=PRINT ALL, 1=NO PRINT, 2=PRINT MIXTURES        1
 IOUT  0=OUTPUT ALL MATLS, 1=NONE, 2=MIXT. ONLY         2
 IDOT  0=ANISN OUTPUT, 1=DOTIII, 2=DOTIV                0
 NBUF  NO. K-BYTES BUFFER SPACE (DEFAULT=60)           60
 29844 WORDS MEMORY REQUIRED VS. AVAILABLE 30000
             LIBRARY RECORD LENGTH =    29754,     EXTENDED TABLE LENGTH =      174

                          14 GROUPS,    2 THROUGH   15 GO ON TAPE    4
                         156 GROUPS,   16 THROUGH  171 GO ON TAPE    1

   10$ ARRAY      12 ENTRIES READ
   11$ ARRAY      12 ENTRIES READ
   12* ARRAY      12 ENTRIES READ
   13$ ARRAY      12 ENTRIES READ
    OT
    1    MIXTURE     COMPONENT    MULTIPLIER    TAPE ID      MIX CODE
          (10$)        (11$)        (12$)        (13$)        ( 7$)
    1      13            1       2.35700E-04       1            1
    2      13            2       1.33000E-05       5            2
    3      13            3       9.29039E-03       9            3
    4      13            4       1.29700E-02      13            4
    5      13            5       1.26000E-05      17            5
    6      13            6       5.77699E-03      21            6
    7      13            7       8.86720E-04      25            7
    8      13            8       1.17700E-04      29            8
    9      13            9       1.39800E-02      33            9
   10      13           10       2.70900E-03      37           10
   11      13           11       1.24000E-03      41           11
   12      13           12       2.12000E-04      45           12
   13                                                           13
 ELEMENTS FROM LIBRARY TAPE
    MATL     ID      TITLE
       1      1       PO MO     CASE FOR COMBINED CTR & CRBR PROCESSIN
       2      5       PO PU241 CASE FOR COMBINED CTR & CRBR PROCESSIN
       3      9       PO  NA CASE FOR REM SHIELDING PROBLEM
       4     13       PO  FE CASE FOR REM SHIELDING PROBLEM
       5     17       PO U-235 CASE FOR COMBINED CTR & CRBR PROCESSIN
       6     21       PO  U-238 CASE FOR COMBINED LIBRARY (CTR & CRBR
       7     25       PO PU239 CASE FOR COMBINED CTR & CRBR PROCESSIN
       8     29       PO PU240 CASE FOR COMBINED CTR & CRBR PROCESSIN
       9     33       PO C-16  CASE FOR COMBINED CTR & CRBR PROCESSIN
      10     37       PO CR    CASE FOR COMBINED CTR & CRBR PROCESSIN
      11     41       PO  NI   CASE FOR COMBINED CTR & CRBR PROCESSIN
      12     45       PO MN-55 CASE FOR COMBINED CTR & CRBR PROCESSIN
```

GIP (PREPARE MACROSCOPIC GROUP INDEPENDENT TAPE FOR ANISN)

(GIP OUTPUT CONTINUED ON NEXT PAGE)

DLC-41: OUTPUT FROM JOB3 OF ZPR-6/7 SAMPLE PROBLEM (2 OF 4)

GIP OUTPUT (CONTINUED)

```
* * * ALL CROSS SECTIONS HAVE BEEN READ FROM CARDS AND LIBRARY TAPE  9, 1 GROUP SORTED DIRECTLY TO TAPE  3
* * *    14 GROUPS HAVE BEEN MOVED FROM TAPE  4 TO TAPE  3

* * * 1 GROUP HAS BEEN SORTED FROM  3 TO  1 A NEW COREFULL TO  4, THE BALANCE, IF ANY, TO  2
* * *    14 GROUPS HAVE BEEN MOVED FROM TAPE  4 TO TAPE  3

* * * 1 GROUP HAS BEEN SORTED FROM  3 TO  2 A NEW COREFULL TO  4, THE BALANCE, IF ANY, TO  1
* * *    14 GROUPS HAVE BEEN MOVED FROM TAPE  4 TO TAPE  3

* * * 1 GROUP HAS BEEN SORTED FROM  3 TO  1 A NEW COREFULL TO  4, THE BALANCE, IF ANY, TO  2
* * *    14 GROUPS HAVE BEEN MOVED FROM TAPE  4 TO TAPE  3

* * * 1 GROUP HAS BEEN SORTED FROM  3 TO  2 A NEW COREFULL TO  4, THE BALANCE, IF ANY, TO  1
* * *    14 GROUPS HAVE BEEN MOVED FROM TAPE  4 TO TAPE  3

* * * 1 GROUP HAS BEEN SORTED FROM  3 TO  1 A NEW COREFULL TO  4, THE BALANCE, IF ANY, TO  2
* * *    14 GROUPS HAVE BEEN MOVED FROM TAPE  4 TO TAPE  3

* * * 1 GROUP HAS BEEN SORTED FROM  3 TO  2 A NEW COREFULL TO  4, THE BALANCE, IF ANY, TO  1
* * *    14 GROUPS HAVE BEEN MOVED FROM TAPE  4 TO TAPE  3

* * * 1 GROUP HAS BEEN SORTED FROM  3 TO  1 A NEW COREFULL TO  4, THE BALANCE, IF ANY, TO  2
* * *    14 GROUPS HAVE BEEN MOVED FROM TAPE  4 TO TAPE  3

* * * 1 GROUP HAS BEEN SORTED FROM  3 TO  2 A NEW COREFULL TO  4, THE BALANCE, IF ANY, TO  1
* * *    14 GROUPS HAVE BEEN MOVED FROM TAPE  4 TO TAPE  3

* * * 1 GROUP HAS BEEN SORTED FROM  3 TO  1 A NEW COREFULL TO  4, THE BALANCE, IF ANY, TO  2
* * *    14 GROUPS HAVE BEEN MOVED FROM TAPE  4 TO TAPE  3

* * * 1 GROUP HAS BEEN SORTED FROM  3 TO  2 A NEW COREFULL TO  4, THE BALANCE, IF ANY, TO  1
* * *    14 GROUPS HAVE BEEN MOVED FROM TAPE  4 TO TAPE  3

* * *     6 GROUPS HAVE BEEN MOVED FROM TAPE  1 TO TAPE  3

CROSS SECTIONS FOR GRP.   1
CROSS SECTIONS FOR GRP.   2
CROSS SECTIONS FOR GRP.   3
CROSS SECTIONS FOR GRP.   4
CROSS SECTIONS FOR GRP.   5
CROSS SECTIONS FOR GRP.   6
CROSS SECTIONS FOR GRP.   7
CROSS SECTIONS FOR GRP.   8
```

(SOME GIP OUTPUT OMITTED)

```
CROSS SECTIONS FOR GRP. 168
CROSS SECTIONS FOR GRP. 169
CROSS SECTIONS FOR GRP. 170
CROSS SECTIONS FOR GRP. 171
* * * TOTAL PROBLEM CPU =  0 HRS,  0.0    MIN. * * * CPU INCREMENT =  0 HRS,  0.0    MIN. * * *

* * * PROBLEM BEGAN ON 77/77/77 (  0 ) AT TIME    HRS,  0.0 MIN. * * *

IHC900I EXECUTION TERMINATING DUE TO ERROR COUNT FOR ERROR NUMBER  217
IHC217I FIOCS - END OF DATA SET ON UNIT    5
TRACEBACK  ROUTINE  CALLED FROM ISN   REG.  14   REG.  15   REG.   0   REG.   1
           IBCOM                      000D1D70   000D8370   00000000   00000000
              MAIN                    00019FF8   010D17E8   FD0000C8   0010EFF8
ENTRY POINT=  010D17E8
SUMMARY OF ERRORS FOR THIS JOB   ERROR NUMBER   NUMBER OF ERRORS
                                     217              1
```

(END OF GIP OUTPUT)

DLC-41: OUTPUT FROM JOB3 OF ZPR-6/7 SAMPLE PROBLEM (3 OF 4)

ANISN (ZPR-6/7 INFINITE HOMOGENEOUS MEDIUM CALCULATION)

```
ZPR-6/7 INFINITE MEDIUM RUN WITH ANISN
 15$ ARRAY      36 ENTRIES READ
 16* ARRAY      14 ENTRIES READ
  OT
2543 LOCATIONS WILL BE USED FOR THIS PROBLEM
 415 LOCATIONS WILL BE USED TO READ CROSS SECTIONS
1 X-SEC. SETS READ FROM GRP. INDEPENDENT TAPE
  2* ARRAY       1 ENTRIES READ
  OT
  1* ARRAY     171 ENTRIES READ
  4* ARRAY       2 ENTRIES READ
  5* ARRAY     171 ENTRIES READ
  6* ARRAY       3 ENTRIES READ
  7* ARRAY       3 ENTRIES READ
  8$ ARRAY       1 ENTRIES READ
  9$ ARRAY       1 ENTRIES READ
 24$ ARRAY     171 ENTRIES READ
  OT
ZPR-6/7 INFINITE MEDIUM RUN WITH ANISN
ID      PROBLEM ID NO.                          1      ITH    0/1 = REG./ADJ.                          0
ISCT    ORDER OF SCATTERING                     0      ISN    QUADRATURE ORDER                         2
IGE     1/2/3 = PLA/CYL/SPH                     1      IBL    0/1/2/3 = NC REFL/REFL/PER/WHITE         1
IBR     RT. B.C. SAME AS LEFT B.C.,IBL          1      IZM    NO. OF ZONES                             1
IM      NO. OF INTERVALS                        1      IEVT   0/1/2/3/4/5/6=Q/K/ALPHA/C/Z/R/H         1
IGM     NO. OF GROUPS                         171      IHI    POS. OF SIGMA T                          3
IHS     POS. OF SIGMA GG                        4      IHM    TABLE LENGTH                           174
MS      MIXING TABLE LENGTH                     0      MCR    NO. MATLS. FROM CARDS                    0
MTP     NO. MATLS. FROM LIB TAPE                1      MT     NO. OF MATLS.                            1
IDFM    0/1=NONE/DENSITY FACTORS(21*)           0      IPVT   0/1/2=NONE/K/ALPHA                        0
IQM     0/1=NONE/DIST. SOURCE                   0      IPM    0/1/IM=NONE/S(MM,IPP)/S(MM,IM)           0
IPP     INTERVAL OF SHELL SOURCE                0      IIM    INNER ITER. MAX.                        25
ID1     0/1/2/3=NO/PRNT ND/PNCH N/BOTH          0      ID2    0/1/2=NO/X-SEC TAPE/PREV                 1
ID3     0/N=NC/N ACT. BY ZONE                   0      ID4    0/1=NO/N ACT. BY INT.                    0
ICM     OUTER ITER. MAX.                       25      IDAT1  0/1/2=NO/MIN/MAX TAPE                    1
IDAT2   0/1=NC/DIFFUSION(24$)                  25      IFG    0/1=NO/FEW GRP.                          0
IFLU    0/1/2=BOTH/LINEAR/STEP                  3      IFN    0/1/2=INPUT 2*/3*/PREV. CASE             0
IPRT    0/1 = PRINT X-SEC/DO NOT                1      IXTR   0/1=CALC/READ P-L CONSTANTS              0
EV      EIGENVALUE GUESS            0.0                EVM    EIGENVALUE MODIFIER          0.0
EPS     PRECISION DESIRED           1.00000E-04        BF     BUCKLING FACTOR              1.42089E 00
DY      CYL OR PLA HEIGHT           0.0                DZ     PLANE DEPTH                  0.0
DFM1    HT. FOR VOID CORR.          0.0                XNF    NORM. FACTOR                 1.00000E 00
PV      IPVT=1/2 - K/ALPHA          0.0                RYF    LAMBDA2 RELAXATION           5.00000E-01
XLAL    PT CNVRG EPS. IF .NE.0      1.00000E-04        XLAH   1-LAMBDA MAX.-SEARCH        0.0
EQL     EV CHANGE EPS.-SEARCH       1.00000E-03        XNPM   NEW PARAM. MOD.-SEARCH      7.50000E-01
ZPR-6/7 INFINITE MEDIUM RUN WITH ANISN
INT.   ZONE NUMBER      RADIUS          AREA          VOLUME      FISS DENS   DENS FACTOR
  1        1              0        1.00000E 00  1.00000E 00  1.00000E 00
  2                   1.00000E 00  1.00000E 00
ZPR-6/7 INFINITE MEDIUM RUN WITH ANISN
      FISS SPEC      VELOCITY     RT ALBEDO    LFT ALBEDO   DIFF MARKER   MAT'L/ZONE    L OF P(L)    RADIUS MOD
  1  1.33000E-05   1.00000E 00                              2                1             0            0
  2  2.22000E-05   1.00000E 00                              2
  3  3.60500E-05   1.00000E 00                              2
  4  2.53000E-05   1.00000E 00                              2
  5  3.16000E-05   1.00000E 00                              2
  6  3.93000E-05   1.00000E 00                              2


166  1.71000E-10   1.00000E 00                              2
167  1.17000E-10   1.00000E 00                              2
168  8.07000E-11   1.00000E 00                              2
169  5.54000E-11   1.00000E 00                              2
170  1.07000E-10   1.00000E 00                              2
171  1.44000E-11   1.00000E 00                              2
ZPR-6/7 INFINITE MEDIUM RUN WITH ANISN
              CROSS SECTION MIXING TABLE                          ANGULAR  QUADRATURE  CONSTANTS
      MIXTURE       COMPONENT      NC. DENSITY              COSINE (MU)      WEIGHT     REFL DIRECT    WT. X COS.
  1                                                        -1.00000E 00       0           3             0
  2                                                        -5.77350E-01  5.00000E-01      3        -2.88675E-01
  3                                                         5.77350E-01  5.00000E-01      2         2.88675E-01
ELAPSED TIME    0.33 MIN.
OUTER INNER      NEUT BAL     UPSCATTER RATIO    EIGENVALUE        LAMBDA1          LAMBDA2
  0     0    0.0              0.0              0.0               0.0              0.0
  1     0    1.0000286E 00    0.0              1.2132969E 00     1.2132969E 00    0.0
  2     0    1.0000315E 00    0.0              1.2133579E 00     1.0000505E 00    1.0000277E 00
                                                                                                ANG. FLX ON  2
  3     0    1.0000372E 00    0.0              1.2133389E 00     9.9998444E-01    9.9997407E-01  FINAL MONITOR
ELAPSED TIME    0.66 MIN.
ZPR-6/7 INFINITE MEDIUM RUN WITH ANISN
```

INFINITE HOMOGENEOUS MEDIUM OPTION CHOSEN FOR ALL GROUPS

RESULT FOR ZPR-6/7 K-CALCULATION

(ANISN OUTPUT CONTINUED ON NEXT PAGE)

ANISN OUTPUT (CONTINUED)

```
INT.  ZONE NUMBER      RADIUS      INT. MIDPOINT     AREA          VOLUME      FISSION DENS
  1        1          0.0          5.00000E-01   1.00000E 00   1.00000E 00   1.21349E 00
  2                   1.00000E 00                1.00000E 00
 ZPR-6/7 INFINITE MEDIUM RUN WITH ANISN
TOTAL FLUX
INT.    GRP.  1       GRP.  2       GRP.  3       GRP.  4       GRP.  5       GRP.  6       GRP.  7       GRP.  8
  1   1.91150E-04   3.34851E-04   4.79802E-04   4.08357E-04   4.94737E-04   6.14222E-04   7.52851E-04   2.13210E-03
INT.    GRP.  9       GRP. 10       GRP. 11       GRP. 12       GRP. 13       GRP. 14       GRP. 15       GRP. 16
  1   2.95240E-03   4.07844E-03   5.70090E-03   8.25383E-03   1.09489E-02   1.45804E-02   1.93316E-02   2.45590E-02
INT.    GRP. 17       GRP. 18       GRP. 19       GRP. 20       GRP. 21       GRP. 22       GRP. 23       GRP. 24
  1   3.08447E-02   3.89404E-02   4.78969E-02   5.67356E-02   7.10435E-02   2.66642E-02   5.94892E-02   1.00405E-01
INT.    GRP. 25       GRP. 26       GRP. 27       GRP. 28       GRP. 29       GRP. 30       GRP. 31       GRP. 32
  1   1.12657E-01   1.28796E-01   1.54192E-01   1.66643E-01   1.92669E-01   2.11847E-01   4.82101E-01   5.38620E-01
INT.    GRP. 33       GRP. 34       GRP. 35       GRP. 36       GRP. 37       GRP. 38       GRP. 39       GRP. 40
  1   6.24847E-01   3.81949E-01   4.77202E-01   4.95149E-01   5.29792E-01   6.07387E-01   6.08967E-01   4.33568E-01
INT.    GRP. 41       GRP. 42       GRP. 43       GRP. 44       GRP. 45       GRP. 46       GRP. 47       GRP. 48
  1   1.28697E-01   1.36919E-01   2.49553E-01   4.79638E-01   6.47288E-01   6.18343E-01   6.54932E-01   6.94489E-01
INT.    GRP. 49       GRP. 50       GRP. 51       GRP. 52       GRP. 53       GRP. 54       GRP. 55       GRP. 56
  1   7.90480E-01   8.08419E-01   7.66595E-01   8.34894E-01   8.91351E-01   9.45000E-01   7.82134E-01   9.73151E-01
INT.    GRP. 57       GRP. 58       GRP. 59       GRP. 60       GRP. 61       GRP. 62       GRP. 63       GRP. 64
  1   1.13817E 00   1.03649E 00   1.61172E 00   6.37769E-01   1.11121E 00   1.05479E 00   1.38345E 00   1.40026E 00
INT.    GRP. 65       GRP. 66       GRP. 67       GRP. 68       GRP. 69       GRP. 70       GRP. 71       GRP. 72
  1   1.50057E 00   1.51178E 00   1.54288E 00   1.77139E 00   1.92001E 00   1.98606E 00   2.04130E 00   2.21944E 00
INT.    GRP. 73       GRP. 74       GRP. 75       GRP. 76       GRP. 77       GRP. 78       GRP. 79       GRP. 80
  1   2.24449E 00   3.39475E 00   2.52002E 00   1.33347E 00   1.64782E 00   3.99452E 00   4.46989E 00   4.90045E-01
INT.    GRP. 81       GRP. 82       GRP. 83       GRP. 84       GRP. 85       GRP. 86       GRP. 87       GRP. 88
  1   1.95991E-01   4.39429E-01   1.09952E 00   2.06922E 00   4.42857E 00   2.10177E 00   2.18925E 00   2.20272E 00
INT.    GRP. 89       GRP. 90       GRP. 91       GRP. 92       GRP. 93       GRP. 94       GRP. 95       GRP. 96
  1   1.97902E 00   2.00952E 00   2.33929E 00   2.80241E 00   2.20094E 00   2.32682E 00   2.17681E 00   1.71935E 00
INT.    GRP. 97       GRP. 98       GRP. 99       GRP.100       GRP.101       GRP.102       GRP.103       GRP.104
  1   2.49977E 00   2.46899E 00   2.45765E 00   2.44396E 00   2.22469E 00   4.88676E 00   5.26053E 00   1.43536E 00
INT.    GRP.105       GRP.106       GRP.107       GRP.108       GRP.109       GRP.110       GRP.111       GRP.112
  1   2.29404E 00   3.80329E 00   3.24561E 00   7.14562E 00   1.83982E 00   4.81551E 00   4.79044E 00   5.69690E 00
INT.    GRP.113       GRP.114       GRP.115       GRP.116       GRP.117       GRP.118       GRP.119       GRP.120
  1   2.12452E 00   1.59184E 00   6.65685E-01   1.45592E 00   2.73906E 00   1.08121E 00   8.93154E-01   2.59305E 00
INT.    GRP.121       GRP.122       GRP.123       GRP.124       GRP.125       GRP.126       GRP.127       GRP.128
  1   4.21557E 00   5.95897E 00   5.91238E 00   4.95712E 00   3.45855E 00   3.13343E 00   2.43018E 00   1.04108E 00
INT.    GRP.129       GRP.130       GRP.131       GRP.132       GRP.133       GRP.134       GRP.135       GRP.136
  1   4.44013E-01   1.98809E-01   8.19684E-02   6.51824E-02   1.15279E-01   4.31135E-01   7.37436E-01   2.37100E 00
INT.    GRP.137       GRP.138       GRP.139       GRP.140       GRP.141       GRP.142       GRP.143       GRP.144
  1   2.15854E 00   1.73797E 00   1.35315E 00   1.02318E 00   7.02372E-01   4.38806E-01   3.55869E-01   2.32528E-01
INT.    GRP.145       GRP.146       GRP.147       GRP.148       GRP.149       GRP.150       GRP.151       GRP.152
  1   1.57695E-01   9.29258E-02   4.51714E-02   2.99171E-02   1.40515E-02   6.37109E-03   2.65713E-03   1.96277E-03
INT.    GRP.153       GRP.154       GRP.155       GRP.156       GRP.157       GRP.158       GRP.159       GRP.160
  1   1.32931E-03   4.30389E-04   1.51434E-04   4.99429E-05   3.23088E-05   6.93049E-06   3.46715E-06   2.88715E-06
INT.    GRP.161       GRP.162       GRP.163       GRP.164       GRP.165       GRP.166       GRP.167       GRP.168
  1   2.63503E-06   2.27019E-06   1.74369E-06   1.21004E-06   3.89478E-07   3.80003E-08   9.13268E-08   7.77082E-08
INT.    GRP.169       GRP.170       GRP.171
  1   2.86899E-08   3.08904E-08   5.63726E-09
SUMMARY FOR ZONE   1 BY GROUP INCLUDING SUM FOR ALL GROUPS IN LINE 172
GRP.   FIX   SOURCE   FISS SOURCE   IN  SCATTER   SLF SCATTER   OUT SCATTER   ABSORPTION   LEAKAGE   BALANCE
  1   0.0            1.33016E-05   0.0           9.65379E-06   1.03260E-05   2.97565E-06   0.0       9.99995E-01
  2   0.0            2.22027E-05   1.45665E-06   1.66363E-05   1.82308E-05   5.42859E-06   0.0       9.99996E-01
  3   0.0            3.60543E-05   3.10870E-06   1.99578E-05   3.10957E-05   8.06749E-06   0.0       9.99997E-01
  4   0.0            2.53030E-05   7.43160E-06   1.75512E-05   2.58578E-05   6.87697E-06   0.0       9.99996E-01
  5   0.0            3.16038E-05   7.00006E-06   2.19986E-05   3.02357E-05   8.36824E-06   0.0       9.99997E-01
  6   0.0            3.93047E-05   7.48058E-06   2.83069E-05   3.64222E-05   1.03633E-05   0.0       9.99996E-01
  7   0.0            4.83058E-05   7.97442E-06   3.60914E-05   4.36381E-05   1.26423E-05   0.0       9.99996E-01
  8   0.0            1.32016E-04   1.36646E-05   1.16098E-04   1.10296E-04   3.53848E-05   0.0       9.99995E-01
  9   0.0            1.93023E-04   1.66395E-05   1.55246E-04   1.62260E-04   4.74032E-05   0.0       9.99995E-01
```

(REMAINDER OF SUMMARY TABLE OMITTED)

(END OF ANISN OUTPUT)

APPENDIX B

JCL, Input Data, and Output from the CTR Standard Blanket Sample Problem in DLC-41/VITAMIN-C.

Contents | Page

Input for JOB 1 (AIM, AIM) 47
(CHOX) 48
Output from JOB 1 (AIM) 49
(AIM) 50
(CHOX) 51

Input for JOB 2 (RADE, DIAL) 52
(MALOCS) 53
Output from JOB 2 (RADE) 54
(DIAL) 58
(MALOCS) 62

Input for JOB 3 (NITAWL) 69
(XSDRNPM) 70
Output from JOB 3 (NITAWL) 71
(XSDRNPM) 74

Input for JOB 4 (GIP) 81
(ANISN) 82
Output from JOB 4 (GIP) 83
(ANISN) 85

DLC-41: JCL AND INPUT DATA FOR JOB1 OF THE CTR STANDARD BLANKET SAMPLE PROBLEM (1 OF 2)

AIM (CONVERT 171N,36G AMPX LAPHNGAS LIBRARY BCD-TO-BINARY)

```
//IJBJSAMP JCB (13620),'J B WRIGHT 6025'
//*CLASS CPU91=05M.IO=25.REGION=270K.SPECIAL=TAPE
//AIM1 EXEC FORTHCLG,REGION.GO=270K,LIB=FORT
//SYSPRINT DD DUMMY
//FORT.SYSIN DD UNIT=TAPE9,DISP=(OLD,PASS),
// VOL=SER=RR0001,LABEL=(1,NL),
// DCB=(RECFM=FB,LRECL=80,BLKSIZE=3200)
//LKED.SLASM DD UNIT=3330,VOL=SER=NE3330,DSN=RWR.AMPX.SLASM.R8477,
// DISP=SHR,DCB=(RECFM=FB,LRECL=80,BLKSIZE=3200)
//LKED.SLFTN DD UNIT=3330,VOL=SER=NE3330,DSN=RWR.AMPX.SLFTN.R8477,
// DISP=SHR,DCB=(RECFM=FB,LRECL=80,BLKSIZE=3200)
//LKED.SYSIN DD *
 INCLUDE SLASM
 INCLUDE SLFTN
//GO.FT06F001 DD SYSOUT=A,DCB=(RECFM=FBA,LRECL=133,BLKSIZE=3458)
//GO.FT17F001 DD UNIT=SYSDA,SPACE=(TRK,(900,50)),
// DCB=(RECFM=VBS,LRECL=X,BLKSIZE=3520,BUFL=4000)
//GO.FT73F001 DD UNIT=TAPE9,DISP=(OLD,KEEP),
// VOL=SER=R3051,
// LABEL=(1,NL),
// DCB=(RECFM=FB,LRECL=80,BLKSIZE=3200)
//GO.FT75F001 DD UNIT=SYSDA,
// DCB=(RECFM=VBS,LRECL=X,BLKSIZE=3520,BUFL=4000),
//   SPACE=(3520,(2000,50)),DSN=&&AIMX1,DISP=(NEW,PASS)
//GO.FT05F001 DD *
0$$ 75 73 1$$ 1 2$$ 0 -1 1 E T
```

AIM SOURCE PROGRAM

(171N,36G) BCD AMPX LAPHNGAS LIBRARY

(171N,36G) BINARY AMPX LAPHNGAS LIBRARY

DLC-41: JCL AND INPUT DATA FOR JOB1 OF THE CTR STANDARD BLANKET SAMPLE PROBLEM

AIM (CONVERT 36G AMPX SMUG LIBRARY BCD-TO-BINARY)

```
//AIM2 EXEC FORTHCLG,REGION.GO=270K,LIB=FORT
//SYSPRINT DD DUMMY
//FORT.SYSIN DD UNIT=TAPE9,DISP=(OLD,PASS),
// VOL=SER=RR0001,LABEL=(3,NL),
// DCB=(RECFM=FB,LRECL=80,BLKSIZE=3200)
//LKED.SLASM DD UNIT=3330,VOL=SER=NE3330,DSN=RWR.AMPX.SLASM.R8477,
// DISP=SHR,DCB=(RECFM=FB,LRECL=80,BLKSIZE=3200)
//LKED.SLFTN DD UNIT=3330,VOL=SER=NE3330,DSN=RWR.AMPX.SLFTN.R8477,
// DISP=SHR,DCB=(RECFM=FB,LRECL=80,BLKSIZE=3200)
//LKED.SYSIN DD *
 INCLUDE SLASM
 INCLUDE SLFTN
//GO.FT06F001 DD SYSOUT=A,DCB=(RECFM=FBA,LRECL=133,BLKSIZE=3458)
//GO.FT17F001 DD UNIT=SYSDA,SPACE=(TRK,(900,50)),
// DCB=(RECFM=VBS,LRECL=X,BLKSIZE=3520,BUFL=4000)
//GO.FT74F001 DD UNIT=TAPE9,DISP=(OLD,KEEP),
// VOL=SER=R3051,
// LABEL=(3,NL),
// DCB=(RECFM=FB,LRECL=80,BLKSIZE=3200)
//GO.FT76F001 DD UNIT=SYSDA,
// DCB=(RECFM=VBS,LRECL=X,BLKSIZE=3520,BUFL=4000),
//   SPACE=(3520,(2000,50)),DSN=&&AIMX2,DISP=(NEW,PASS)
//GO.FT05F001 DD *
0$$ 76 74 1$$ 1 2$$ 0 -1 1 E T
```

AIM SOURCE PROGRAM

36G BCD AMPX SMUG LIBRARY

36G BINARY AMPX SMUG LIBRARY

DLC-41: JCL AND INPUT DATA FOR JOB1 OF THE CTR STANDARD BLANKET SAMPLE PROBLEM (2 OF 2)

```
//CHOX EXEC FORTHCLG,REGION.GO=270K,LIB=FORT
//SYSPRINT DD DUMMY
//FORT.SYSIN DD UNIT=TAPE9,DISP=(CID,PASS),
// VOL=SER=RB0001,LABEL=(8,NL),
// DCB=(RECFM=FB,LRECL=80,BLKSIZE=3200)
//LKED.SLASM DD UNIT=3330,VOL=SER=NE3330,DSN=RWR.AMPX.SLASM.R8477,
// DISP=SHR,DCB=(RECFM=FB,LRECL=80,BLKSIZE=3200)
//LKED.SLFTN DD UNIT=3330,VOL=SER=NE3330,DSN=RWR.AMPX.SLFTN.R8477,
// DISP=SHR,DCB=(RECFM=FB,LRECL=80,BLKSIZE=3200)
//LKED.SYSIN DD *
 INCLUDE SLFTN
 INCLUDE SLASM
//GO.FT06F001 DD SYSOUT=A,DCB=(RECFM=FBA,LRECL=133,BLKSIZE=3458)
//GO.FT17F001 DD UNIT=SYSDA,SPACE=(TRK,(900,50)),
// DCB=(RECFM=VBS,LRECL=X,BLKSIZE=3520,BUFL=4096)
//GO.FT18F001 DD UNIT=SYSDA,SPACE=(TRK,(900,50)),
// DCB=(RECFM=VBS,LRECL=X,BLKSIZE=3520,BUFL=4096)
//GO.FT72F001 DD UNIT=TAPE9,DISP=(CLD,PASS),
// VOL=SER=X1428,
// LABEL=(1,NL),
// DCB=(RECFM=VBS,LRECL=X,BLKSIZE=3520,BUFL=4096)
//GO.FT75F001 DD UNIT=SYSDA,
// DCB=(RECFM=VBS,LRECL=X,BLKSIZE=3520,BUFL=4096),
//  SPACE=(3520,(2000,50)),DSN=&&AIMX1,DISP=(OLD,DELETE)
//GO.FT76F001 DD UNIT=SYSDA,
// DCB=(RECFM=VBS,LRECL=X,BLKSIZE=3520,BUFL=4096),
//  SPACE=(3520,(2000,50)),DSN=&&AIMX2,DISP=(OLD,DELETE)
//GO.FT01F001 DD UNIT=TAPE7,DISP=(NEW,PASS),
// VOL=SER=X16410,
// LABEL=(1,NL),
// DCB=(RECFM=VBS,LRECL=X,BLKSIZE=3520,DEN=2,TRTCH=C,BUFL=4096)
//GO.FT05F001 DD *
0$$ 72 75 76 1 E 1$$ 4 E T
2$$ 1274 1189 1271 1272 3$$ 1274 1189 1271 1272 4$$ 6 41 3 3
5$$ 1274 1189 1271 1272 T
```

CHOX SOURCE PROGRAM

CHOX (SELECT AND COMBINE NEUTRON GAMMA-RAY PRODUCTION AND INTERACTION DATA FOR 4 MATERIALS)

171N AMPX LIBRARY (FROM JOB1 OF ZPR-6/7 SAMPLE PROBLEM)

(171N36G) AMPX LAPHNGAS LIBRARY

36G AMPX SMUG LIBRARY

(171N,36G) COUPLED AMPX MASTER WITH 4 MATERIALS

DLC-41: OUTPUT FROM JOB1 OF CTR STANDARD BLANKET SAMPLE PROBLEM (1 OF 3)

```
0$ ARRAY      2 ENTRIES READ
1$ ARRAY      1 ENTRIES READ
2$ ARRAY      4 ENTRIES READ
0T
```

AIM (CONVERTS 171N,36G AMPX
LAPHNGAS LIBRARY BCD-TO-BINARY)

```
 AAAAAAAAA      IIIIIIIIIIII     MM          MM
 AAAAAAAAAAA    IIIIIIIIIIII     MMM        MMM
AA         AA       II         MMMM      MMMM
AA         AA       II         MM MM    MM MM
AA         AA       II         MM  MM MM  MM
AAAAAAAAAAAAA       II         MM   MMM   MM
AAAAAAAAAAAAA       II         MM    M    MM
AA         AA       II         MM         MM
AA         AA       II         MM         MM
AA         AA       II         MM         MM
AA         AA  IIIIIIIIIIII    MM         MM
AA         AA  IIIIIIIIIIII    MM         MM

IIIIIIIIIIII            JJ   BBBBBBBBBBBB   333333333333    SSSSSSSSSSSS     AAAAAAAAA     MM          MM   PPPPPPPPPPPP
IIIIIIIIIIII            JJ   BBBBBBBBBBBBB  333333333333    SSSSSSSSSSSSS   AAAAAAAAAAA    MMM        MMM   PPPPPPPPPPPPP
    II                  JJ   BB         BB  33         33   SS            SS AA         AA  MMMM      MMMM   PP          PP
    II                  JJ   BB         BB             33   SS               AA         AA  MM MM    MM MM   PP          PP
    II                  JJ   BB         BB             33   SS               AA         AA  MM  MM MM  MM   PP          PP
    II                  JJ   BBBBBBBBBBBB            333    SSSSSSSSSSSS     AAAAAAAAAAAAA  MM    MMM    MM   PPPPPPPPPPPP
    II                  JJ   BBBBBBBBBBBB            333     SSSSSSSSSSSS    AAAAAAAAAAAAA  MM     M     MM   PPPPPPPPPPPP
    II                  JJ   BB         BB             33            SS     AA         AA  MM          MM   PP
    II                  JJ   BB         BB             33            SS     AA         AA  MM          MM   PP
    II            JJ    JJ   BB         BB  33         33   SS         SS   AA         AA  MM          MM   PP
IIIIIIIIIIII      JJJJJJJJJJJJ BBBBBBBBBBBBB 333333333333   SSSSSSSSSSSSS  AA         AA  MM          MM   PP
IIIIIIIIIIII       JJJJJJJJJJJ  BBBBBBBBBBB   333333333333    SSSSSSSSSSSS   AA         AA  MM          MM   PP

    11            0000000                 //    11            11                //  7777777777777   7777777777777
   111            000000000               //   111           111                //   77777777777    77777777777
  1111           00       00              //  1111          1111                //   77       77    77       77
    11          00         00             //    11            11                //          77            77
    11          00         00             //    11            11                //         77            77
    11          00         00             //    11            11                //        77            77
    11          00         00             //    11            11                //        77            77
    11          00         00             //    11            11                //       77            77
    11          00         00             //    11            11                //       77            77
    11           00       00              //    11            11                //      77            77
 11111111         000000000               //  11111111      11111111            //      77            77
 11111111          0000000                //  11111111      11111111            //      77            77

 22222222222     33333333333                 11         7777777777777                    44      555555555555
2222222222222   333333333333                 111         77777777777                     444      555555555555
22          22  33          33              1111        77       77                    4444      55
            22              33                11          77     77                    44 44      55
           22               33                11           77   77                    44  44      55
          22            333                  11            77  77                   44   44      555555555555
        22              333                  11            77  77          .....    44    44      555555555555
      22                  33                 11           77   77          .....   44444444444              55
    22                    33                 11          77    77          .....   44444444444              55
  22            33        33                 11         77     77          .....            44      55      55
2222222222222   333333333333                11111111   77                                   44       555555555555
2222222222222    33333333333                11111111   77                                   44

COMMENCE BCD-TO-BINARY CONVERSION FOR


THE BCD-TO-BINARY CONVERSION IS COMPLETED
```

DLC-41: OUTPUT FROM JOB1 OF CTR STANDARD BLANKET SAMPLE PROBLEM (2 OF 3)

```
0$ ARRAY      2 ENTRIES READ
1$ ARRAY      1 ENTRIES READ
2$ ARRAY      4 ENTRIES READ
OT
```

AIM (CONVERTS 36G AMPX SMUG LIBRARY BCD-TO-BINARY)

```
                                  AAAAAAAAA     IIIIIIIIIIII    MM          MM
                                 AAAAAAAAAAA    IIIIIIIIIIII    MMM        MMM
                                AA         AA       II         MMMM      MMMM
                                AA         AA       II         MM MM    MM MM
                                AA         AA       II         MM  MM MM  MM
                                AAAAAAAAAAAAA       II         MM   MMM   MM
                                AAAAAAAAAAAAA       II         MM    M    MM
                                AA         AA       II         MM         MM
                                AA         AA       II         MM         MM
                                AA         AA       II         MM         MM
                                AA         AA  IIIIIIIIIIII   MM         MM
                                AA         AA  IIIIIIIIIIII   MM         MM

IIIIIIIIIIII              JJ    BBBBBBBBBBBB    33333333333    SSSSSSSSSSS      AAAAAAAAA     MM          MM    PPPPPPPPPPPP
IIIIIIIIIIII              JJ    BBBBBBBBBBBB   3333333333333   SSSSSSSSSSSSS    AAAAAAAAAAA    MMM        MMM    PPPPPPPPPPPPP
     II                   JJ    BB         BB  33         33   SS         SS    AA         AA  MMMM      MMMM    PP         PP
     II                   JJ    BB         BB              33   SS               AA         AA  MM MM    MM MM    PP         PP
     II                   JJ    BB         BB              33   SS               AA         AA  MM  MM MM  MM    PP         PP
     II                   JJ    BBBBBBBBBBBB             333    SSSSSSSSSSSS     AAAAAAAAAAAAA  MM   MMM   MM    PPPPPPPPPPPP
     II                   JJ    BBBBBBBBBBBB             333     SSSSSSSSSSSS    AAAAAAAAAAAAA  MM    M    MM    PPPPPPPPPPPP
     II                   JJ    BB         BB              33             SS    AA         AA  MM         MM    PP
     II                   JJ    BB         BB              33             SS    AA         AA  MM         MM    PP
     II              JJ   JJ    BB         BB  33         33   SS         SS    AA         AA  MM         MM    PP
IIIIIIIIIIII         JJJJJJJJJJJJ  BBBBBBBBBBBB  3333333333333   SSSSSSSSSSSSS    AA         AA  MM         MM    PP
IIIIIIIIIIII          JJJJJJJJJJJ  BBBBBBBBBBBB   33333333333     SSSSSSSSSSS     AA         AA  MM         MM    PP

     11                0000000                     11             11                          7777777777777   7777777777777
   111                000000000                   111            111                          777777777777    777777777777
  1111               00       00                 1111           1111                          77        77    77        77
    11              00         00                 11             11                                 77              77
    11              00         00                 11             11                                77              77
    11              00         00                 11             11                               77               77
    11              00         00                 11             11                               77               77
    11              00         00                 11             11                              77                77
    11              00         00                 11             11                              77                77
    11               00       00                  11             11                             77                 77
 11111111             000000000              11111111       11111111                           77                 77
 11111111               0000000              11111111       11111111                           77                 77

 22222222222      33333333333                 22222222222    33333333333                    22222222222     555555555555
2222222222222    3333333333333               2222222222222  3333333333333                  2222222222222    555555555555
22          22   33          33              22          22 33          33                 22          22   55
            22               33                         22               33                            22   55
           22                33                        22                33                            22   55
          22               333                       22               333                           22    555555555555
        22                 333                     22                 333                         22     555555555555
      22                    33                   22                    33                       22                 55
    22                      33                 22                      33                     22                   55
  22                 33     33               22                 33   33                   22          55       55
2222222222222    3333333333333               2222222222222  3333333333333                2222222222222    555555555555
2222222222222     33333333333                2222222222222   33333333333                 2222222222222     55555555555

COMMENCE BCD-TO-BINARY CONVERSION FOR


THE BCD-TO-BINARY CONVERSION IS COMPLETED
```

00085

DLC-41: OUTPUT FROM JOB1 OF CTR STANDARD BLANKET SAMPLE PROBLEM (3 OF 3)

CHOX (SELECT AND COMBINE NEUTRON, GAMMA-RAY PRODUCTION AND INTERACTION DATA FOR 4 MATERIALS)

```
  0$ ARRAY       9 ENTRIES READ

  1$ ARRAY       2 ENTRIES READ
  0T
 COUPLED NEUTRON AND GAMMA-RAY CROSS-SECTION SETS WILL BE CREATED ON LOGICAL UNIT    1
 NUMBER OF COUPLED SETS                 4
 MOUNT PREVIOUSLY MADE LIBRARY         NO
  2$ ARRAY       4 ENTRIES READ
  3$ ARRAY       4 ENTRIES READ
  4$ ARRAY       4 ENTRIES READ
  5$ ARRAY       4 ENTRIES READ
  0T
CHOX WILL CREATE THE FOLLOWING COUPLED SETS--
                                I D E N T I F I E R S
SET  COUPLED SET    NEUTRON DATA    GAMMA PRODUCTION DATA    GAMMA DATA
 1        1274          1274                1274                  6
 2        1189          1189                1189                 41
 3        1271          1271                1271                  3
 4        1272          1272                1272                  3

      TAPE ID                          12963          NUMBER OF NUCLIDES                    4
      NUMBER OF NEUTRON GROUPS           171          NUMBER OF GAMMA GROUPS               36
      FIRST THERMAL GROUP                171
                                   TABLE OF CONTENTS
    C-12 CASE FOR COMBINED CTR & CRBR PROCESSING                          ID      1274
    NB-93 CASE FOR COMBINED CTR & CRBR PROCESSING                         ID      1189
    LI-6  CASE FOR COMBINED CTR & CRBR PROCESSING                         ID      1271
    LI-7  CASE FOR COMBINED CTR & CRBR PROCESSING                         ID      1272
      TAPE COPY USED     961 I/O'S, AND TOOK     0.81 SECONDS
```

CONTENTS OF 171N COUPLED AMPX MASTER PRODUCED BY CHOX

DLC-41: JCL AND INPUT DATA FOR JOB2 OF THE CTR STANDARD BLANKET PROBLEM SAMPLE PROBLEM (1 OF 2)

RADE (TESTS 171N,36G COUPLED AMPX MASTER)

```
//IJB4SAMP JCB (15334),'J B WRIGHT 6025'
//*CLASS CPU91=4M,IO=20,REGION=310K,SPECIAL=TAPE,LINES=20
//*NOTES THIS JOB WILL CALL FOR NO MORE THAN 3 9TRACK TAPES AT ONCE
//RADE EXEC FORTHCLG,REGION.GO=300K
//SYSPRINT DD DUMMY
//FORT.SYSIN DD UNIT=TAPE9,DISP=(OLD,PASS),
// VOL=SER=RR0001,LABEL=(17,NL),
// DCB=(RECFM=FB,LRECL=80,BLKSIZE=3200)
//LKED.SLASM DD UNIT=3330,VOL=SER=NE3330,DSN=RWR.AMPX.SLASM.R8477,
// DISP=SHR,DCB=(RECFM=FB,LRECL=80,BLKSIZE=3200)
//LKED.SLFTN DD UNIT=3330,VOL=SER=NE3330,DSN=RWR.AMPX.SLFTN.R8477,
// DISP=SHR,DCB=(RECFM=FB,LRECL=80,BLKSIZE=3200)
//LKED.SYSIN DD *
 INCLUDE SLASM
 INCLUDE SLFTN
//GO.FT06F001 DD SYSOUT=A,DCB=(RECFM=FBA,LRECL=133,BLKSIZE=3458)
//GO.FT18F001 DD UNIT=SYSDA,SPACE=(TRK,(900,50)),
// DCB=(RECFM=VBS,LRECL=X,BLKSIZE=3520,BUFL=4096)
//GO.FT19F001 DD UNIT=SYSDA,SPACE=(TRK,(900,50)),
// DCB=(RECFM=VBS,LRECL=X,BLKSIZE=3520,BUFL=4096)
//GO.FT01F001 DD UNIT=TAPE7,DISP=(OLD,PASS),
// VOL=SER=X16410,
// LABEL=(1,NL),
// DCB=(RECFM=VBS,LRECL=X,BLKSIZE=3520,DEN=2,TRTCH=C)
//GO.FT05F001 DD *
1$$ 1 E 2$$ A2 10 E T
```

RADE SOURCE PROGRAM

(171N,36G) COUPLED AMPX MASTER FROM CHOX

DLC-41: JCL AND INPUT DATA FOR JOB2 OF THE CTR STANDARD BLANKET SAMPLE PROBLEM

DIAL (EDIT 171N,36G COUPLED AMPX MASTER

```
//DIAL EXEC FORTHCLG,REGION.GO=200K
//SYSPRINT DD DUMMY
//FORT.SYSIN DD UNIT=TAPE9,DISP=(OLD,KEEP),
// VOL=SER=RR0001,LABEL=(13,NL),
// DCB=(RECFM=FB,LRECL=80,BLKSIZE=3200)
//LKED.SLASM DD UNIT=3330,VOL=SER=NE3330,DSN=RWR.AMPX.SLASM.R8477,
// DISP=SHR,DCB=(RECFM=FB,LRECL=80,BLKSIZE=3200)
//LKED.SLFTN DD UNIT=3330,VOL=SER=NE3330,DSN=RWR.AMPX.SLFTN.R8477,
// DISP=SHR,DCB=(RECFM=FB,LRECL=80,BLKSIZE=3200)
//LKED.SYSIN DD *
 INCLUDE SLASM
 INCLUDE SLFTN
//GO.FT06F001 DD SYSOUT=A,DCB=(RECFM=FBA,LRECL=133,BLKSIZE=3458)
//GO.FT01F001 DD UNIT=TAPE7,DISP=(OLD,PASS),
// VOL=SER=X16410,
// LABEL=(1,NL),
// DCB=(RECFM=VBS,LRECL=X,BLKSIZE=3520,DEN=2,TRTCH=C)
//GO.FT05F001 DD *
0$$ 1 E 1$$ 2 1 E T
4$$ 1271 1272 1
```

DIAL SOURCE PROGRAM

(171N,36G) COUPLED AMPX MASTER FROM CHOX

EDIT 1D CROSS SECTIONS FOR LI-6 AND LI-7

DLC-41: JCL AND INPUT DATA FOR JOB2 OF THE CTR STANDARD BLANKET SAMPLE PROBLEM (2 OF 2)

```
//MALO EXEC FORTHCLG,REGICN.GO=310K
//SYSPRINT DD DUMMY
//FORT.SYSIN DD UNIT=TAPE9,DISP=(OLD,PASS),
// VOL=SER=RR0001,LABEL=(15,NL),
// DCB=(RECFM=FB,LRECL=80,BLKSIZE=3200)
//LKED.SLASM DD UNIT=3330,VOL=SER=NE3330,DSN=RWR.AMPX.SLASM.R8477,
// DISP=SHR,DCB=(RECFM=FB,LRECL=80,BLKSIZE=3200)
//LKED.SLFTN DD UNIT=3330,VOL=SER=NE3330,DSN=RWR.AMPX.SLFTN.R8477,
// DISP=SHR,DCB=(RECFM=FB,LRECL=80,BLKSIZE=3200)
//LKED.SYSIN DD *

 INCLUDE SLASM
 INCLUDE SLFTN
//GO.FT06F001 DD SYSOUT=A,DCB=(RECFM=FBA,LRECL=133,BLKSIZE=3458)
//GO.FT17F001 DD UNIT=SYSDA,SPACE=(TRK,(900,50)),
// DCB=(RECFM=VBS,LRECL=X,BLKSIZE=3520,BUFL=4096)
//GO.FT18F001 DD UNIT=SYSDA,SPACE=(TRK,(900,50)),
// DCB=(RECFM=VBS,LRECL=X,BLKSIZE=3520,BUFL=4096)
//GO.FT19F001 DD UNIT=SYSDA,SPACE=(TRK,(900,50)),
// DCB=(RECFM=VBS,LRECL=X,BLKSIZE=3520,BUFL=4096)
//GO.FT01F001 DD UNIT=TAPE7,DISP=(OLD,PASS),
// VOL=SER=X16410,
// LABEL=(1,NL),
// DCB=(RECFM=VBS,LRECL=X,BLKSIZE=3520,DEN=2,TRTCH=C)
//GO.FT22F001 DD UNIT=TAPE9,DISP=(NEW,PASS),
// VOL=SER=X17982,
// LABEL=(1,NL),
// DCB=(RECFM=VBS,LRECL=X,BLKSIZE=3520)
//GO.FT05F001 DD *
1$$ 171 100 36 21 E
3$$ A4 1 E
T
4$$ 3Z 4R1 2R2 2R3 2R4 2R5 2R6 2R7 2R8 3R9 2R10 2R11 2R12 13 14 15
 2R16 2R17 2R18 5R19 2R20 2R21 2R22 2R23 2R24 2R25 2R26 27 2R28 2R29
 2R30 2R31 2R32 2R33 2R34 35 36 2R37 38 39 5R40 41 2R42 2R43 2R44 2R45
 2R46 2R47 2R48 2R49 2R50 4R51 2R52 2R53 2R54 4R55 4R56 57 58 59 60 61
 62 2R63 3R64 3R65 66 67 68 69 70 71 72 73 74 75 76 77 78 79 80 81 82 83
 84 85 86 87 88 89 90 91 92 93 94 95 96 97 98 99 2R100
 50
(6E11.4)
 0.5004E-01 0.5000E-01 0.1610E 01 0.1096E 02 0.3294E 02 0.4282E 02
 0.2454E 02 0.7208E 01 0.7199E-01 0.5003E-01 0.4994E-01 0.5000E-01
 0.5003E-01 0.5757E-01 0.7498E-01 0.9608E-01 0.1212E 00 0.1506E 00
 0.1844E 00 0.2230E 00 0.2660E 00 0.9900E-01 0.2145E 00 0.3651E 00
 0.4206E 00 0.4796E 00 0.5410E 00 0.6050E 00 0.6699E 00 0.7362E 00
 0.1668E 01 0.1919E 01 0.2148E 01 0.1150E 01 0.1195E 01 0.1235E 01
 0.1270E 01 0.1298E 01 0.1321E 01 0.8901E 00 0.2249E 00 0.2237E 00
 0.4493E 00 0.9003E 00 0.1355E 01 0.1357E 01 0.1355E 01 0.1347E 01
 0.1333E 01 0.1314E 01 0.1293E 01 0.1270E 01 0.1243E 01 0.1212E 01
 0.1182E 01 0.1145E 01 0.1113E 01 0.1075E 01 0.2037E 01 0.8044E 00
 0.1080E 01 0.8840E 00 0.8462E 00 0.5101E-01 0.5000E-01 0.5001E-01
 0.4999E-01 0.5000E-01 0.5000E-01 0.5000E-01 0.5000E-01 0.4999E-01
 0.5001E-01 0.1000E 00 0.1000E 00 0.5000E-01 0.5000E-01 0.1000E 00
 0.1000E 00 0.1156E-01 0.4364E-02 0.9058E-02 0.2499E-01 0.5000E-01
 0.9999E-01 0.5001E-01 0.5000E-01 0.5000E-01 0.5001E-01 0.4999E-01
 0.4999E-01 0.5004E-01 0.4996E-01 0.5005E-01 0.4994E-01 0.5004E-01
 0.4995E-01 0.5002E-01 0.5004E-01 0.4993E-01 0.5004E-01 0.1250E 00
 0.1250E 00 0.4754E-01 0.3704E-01 0.9909E-01 0.6633E-01 0.1750E 00
 0.7500E-01 0.1250E 00 0.1250E 00 0.1750E 00 0.7500E-01 0.1104E 00
 0.5407E-01 0.3551E-01 0.4996E-01 0.2500E-01 0.2500E-01 0.7501E-01
 0.1250E 00 0.2500E 00 0.2500E 00 0.2500E 00 0.2500E 00 0.2500E 00
 0.2500E 00 0.1500E 00 0.1000E 00 0.9999E-01 0.1000E 00 0.4998E-01
 0.4999E-01 0.1000E 00 0.1000E 00 0.2500E 00 0.2500E 00 0.2500E 00
 0.2500E 00 0.2500E 00 0.2500E 00 0.2500E 00 0.2500E 00 0.2500E 00
 0.2500E 00 0.2500E 00 0.2500E 00 0.2500E 00 0.2500E 00 0.2500E 00
 0.2500E 00 0.2438E 00 0.2562E 00 0.2500E 00 0.2499E 00 0.2500E 00
 0.2500E 00 0.2500E 00 0.2500E 00 0.2500E 00 0.2500E 00 0.2542E 00
 0.2458E 00 0.2500E 00 0.2500E 00 0.2500E 00 0.2500E 00 0.2500E 00
 0.2500E 00 0.1495E 01 0.4835E 01
6$$ 1 2 3 4 5 6 7 8 9 10 11 12 13 14 15 2R16 2R17 7R18 2R19 2R20 6R21
7**

 3R 2. 12R .5
      0.340      0.160      0.170      0.330      0.200      0.100
      0.100      0.088      0.002      0.060      0.050      0.100
      0.100      0.050      0.050      0.025      0.015      0.015
      0.015      0.010      0.010
 T
```

MALOCS SOURCE PROGRAM

MALOCS (COLLAPSE COUPLED AMPX MASTER FROM 171N,36G TO 100N,21G)

(171N,36G) COUPLED AMPX MASTER FROM CHOX

(100N;21G) COUPLED AMPX MASTER

171 NEUTRON GROUP INTEGRALS OF THE ORIGINAL WEIGHTING FUNCTION USED IN MINX TO GENERATE THE DATA

GAMMA-RAY WEIGHTING FUNCTION (CONSTANT IN ENERGY)

RADE (TESTS 171N, 36G COUPLED AMPX MASTER)

```
RRRRRRRRRRRR      AAAAAAAAA      DDDDDDDDDDDD     EEEEEEEEEEEEE
RRRRRRRRRRRRR    AAAAAAAAAAA     DDDDDDDDDDDDD    EEEEEEEEEEEEE
RR          RR  AA         AA   DD          DD   EE
RR          RR  AA         AA   DD          DD   EE
RR          RR  AA         AA   DD          DD   EE
RRRRRRRRRRRRR   AAAAAAAAAAAAAA   DD          DD   EEEEEEEEE
RRRRRRRRRRRRR   AAAAAAAAAAAAAA   DD          DD   EEEEEEEEE
RR       RR     AA         AA   DD          DD   EE
RR        RR    AA         AA   DD          DD   EE
RR         RR   AA         AA   DD          DD   EE
RR          RR  AA         AA   DDDDDDDDDDDDD    EEEEEEEEEEEEE
RR          RR  AA         AA   DDDDDDDDDDDD     EEEEEEEEEEEEE

IIIIIIIIIIII                JJ   BBBBBBBBBBBB         44      SSSSSSSSSSS      AAAAAAAAA     MM          MM   PPPPPPPPPPPP
IIIIIIIIIIII                JJ   BBBBBBBBBBBBB       444      SSSSSSSSSSSS    AAAAAAAAAAA    MMM        MMM   PPPPPPPPPPPPP
     II                     JJ   BB          BB     4444      SS         SS   AA         AA   MMMM      MMMM   PP          PP
     II                     JJ   BB          BB    44 44      SS              AA         AA   MM MM    MM MM   PP          PP
     II                     JJ   BB          BB   44  44      SS              AA         AA   MM  MM  MM  MM   PP          PP
     II                     JJ   BBBBBBBBBBBB   44    44      SSSSSSSSSSS      AAAAAAAAAAAAA  MM   MMM   MM   PPPPPPPPPPPP
     II                     JJ   BBBBBBBBBBBB  44     44       SSSSSSSSSSS     AAAAAAAAAAAAA  MM    M    MM   PPPPPPPPPPPP
     II                     JJ   BB          BB 444444444444            SS    AA         AA   MM         MM   PP
     II                     JJ   BB          BB 444444444444            SS    AA         AA   MM         MM   PP
     II                JJ   JJ   BB          BB           44      SS         SS   AA         AA   MM         MM   PP
IIIIIIIIIIII      JJJJJJJJJJJJ   BBBBBBBBBBBBB            44      SSSSSSSSSSSS   AA         AA   MM         MM   PP
IIIIIIIIIIII       JJJJJJJJJJJ   BBBBBBBBBBB              44       SSSSSSSSSSS   AA         AA   MM         MM   PP

     11            0000000                    //          22222222222          44                //   7777777777777   7777777777777
    111           000000000                  //         2222222222222        444                //   777777777777    777777777777
   1111          00       00                //         22          22      4444                //   77        77    77        77
     11         00         00               //                     22     44 44                //            77              77
     11         00         00               //                     22    44  44                //           77               77
     11         00         00               //                    22    44   44               //          77                77
     11         00         00               //                  22     44    44              //          77                77
     11         00         00               //                22      44     44             //         77                 77
     11          00       00                //              22       444444444444            //        77                  77
  11111111        00000000                  //            22         444444444444            //        77                  77
  11111111         0000000                  //                       44                    //        77                  77
                                            //                       44                    //        77                  77

     11             11                      5555555555555   7777777777777                    3333333333     3333333333
    111            111                      5555555555555   777777777777                    333333333333   333333333333
   1111           1111                      55                77        77                   33            33            33
     11             11                      55                       77                                  33            33
     11             11                      55                      77                                   33            33
     11             11                      555555555555           77                            333           333
     11             11          .....       555555555555          77          .....             333           333
     11             11          .....                   55       77           .....                33            33
     11             11          .....                   55      77            .....                33            33
     11             11          .....       55          55     77             .....       33       33    33       33
  11111111       11111111                   555555555555       77                         333333333333  333333333333
  11111111       11111111                    5555555555       77                          3333333333    3333333333
```

```
1$ ARRAY      4 ENTRIES READ
2$ ARRAY     20 ENTRIES READ
0T
TABLE OF CONTENTS FOR THE MASTER LIBRARY ON LOGICAL     1

  1      C-12 CASE FOR COMBINED CTR & CRBR PROCESSING                    1274
  2      NE-93 CASE FOR COMBINED CTR & CRBR PROCESSING                   1139
  3      LI-6  CASE FOR COMBINED CTR & CRBR PROCESSING                   1271
  4      LI-7  CASE FOR COMBINED CTR & CRBR PROCESSING                   1272
```

(LISTING OF NEUTRON GROUP STRUCTURE OMITTED)

(RADE OUTPUT CONTINUED ON NEXT PAGE)

DLC-41: OUTPUT FROM JOB2 OF THE CTR STANDARD BLANKET SAMPLE PROBLEM (2 OF 15)

RADE OUTPUT (CONTINUED)

GAMMA-RAY GROUP STRUCTURE

```
THIS LIBRARY HAS A    36 GROUP GAMMA STRUCTURE
GROUP                    RANGE
   1          1.400000E 07---1.200000E 07
   2          1.200000E 07---1.000000E 07
   3          1.000000E 07---8.000000E 06
   4          8.000000E 06---7.500000E 06
   5          7.500000E 06---7.000000E 06
   6          7.000000E 06---6.500000E 06
   7          6.500000E 06---6.000000E 06
   8          6.000000E 06---5.500000E 06
   9          5.500000E 06---5.000000E 06
  10          5.000000E 06---4.500000E 06
  11          4.500000E 06---4.000000E 06
  12          4.000000E 06---3.500000E 06
  13          3.500000E 06---3.000000E 06
  14          3.000000E 06---2.500000E 06
  15          2.500000E 06---2.000000E 06
  16          2.000000E 06---1.660000E 06
  17          1.660000E 06---1.500000E 06
  18          1.500000E 06---1.330000E 06
  19          1.330000E 06---1.000000E 06
  20          1.000000E 06---8.000000E 05
  21          8.000000E 05---7.000000E 05
  22          7.000000E 05---6.000000E 05
  23          6.000000E 05---5.120000E 05
  24          5.120000E 05---5.100000E 05
  25          5.100000E 05---4.500000E 05
  26          4.500000E 05---4.000000E 05
  27          4.000000E 05---3.000000E 05
  28          3.000000E 05---2.000000E 05
  29          2.000000E 05---1.500000E 05
  30          1.500000E 05---1.000000E 05
  31          1.000000E 05---7.500000E 04
  32          7.500000E 04---6.000000E 04
  33          6.000000E 04---4.500000E 04
  34          4.500000E 04---3.000000E 04
  35          3.000000E 04---2.000000E 04
  36          2.000000E 04---1.000000E 04
 CHECKING TOLERANCE= 1.00000E-02 PER CENT
AMPX NUCLIDE      1274 C-12 CASE FOR COMBINED CTR & CRBR PROCESSING
     HAS THE FOLLOWING DATA
    0 RESOLVED RESONANCES                          0 UNRESOLVED RESONANCE POINTS
   15 TEMP IND 1-D NEUT PROCESSES                  3 2-D NEUT PROCESSES
    0 TEMP DEP 1-D NEUT PROCESSES                  6 1-D GAMMA PROCESSES
    2 2-D GAMMA PROCESSES                          2 2-D NEUT-TO-GAMMA PROCESSES
    4 BONDARENKO PROCESSES                         0 ENDF MAT OF FAST NEUT DATA
                                                   0 ENDF MAT OF THERMAL NEUT DATA
                                            1274 ENDF MAT OF YIELD DATA
   44 RECORDS FOR NUCLIDE                          6 ENDF MAT OF GAMMA DATA
THIS NUCLIDE HAS THE FOLLOWING 1-D NEUTRON PROCESSES
      1.       2.       3.       4.      51.      91.     102.     107.     251.     254.
    252.    1001.      27.     101.    1033.
WATCH IT--MT= 251 HAS A VALUE OF -7.1309991E-03 FOR GROUP  34
WATCH IT--MT= 251 HAS A VALUE OF -1.7610997E-02 FOR GROUP  35
2-D NEUT PROCESSES
        MT     LENGTH      ORDER      TEMPS
 1       2       1251          3          0
 2      51        683          3          0
```

(RADE OUTPUT CONTINUED ON NEXT PAGE)

RADE OUTPUT (CONTINUED)

3	91	2612	0	0

2-D NEUTRON TO GAMMA TRANSFERS

	MT	LENGTH	ORDER	TYPES
1	102	731	5	0
2	51	30	5	1

NEUTRON GROUP	ESTIMATED BINDING ENERGY (EV)	CAPTURE CROSS SECTION
1	1.200149E 06	0.0
2	1.200149E 06	0.0
3	1.767937E 06	0.0
4	1.202362E 06	0.0
5	1.198612E 06	0.0
6	1.197599E 06	0.0
7	5.360166E 06	0.0
8	5.440398E 06	0.0
9	5.450281E 06	0.0
10	5.359998E 06	0.0
11	4.720146E 06	0.0
12	4.719998E 06	0.0
13	4.720146E 06	0.0
14	1.356135E 07	0.0
15	1.292129E 07	0.0
16	1.292077E 07	0.0
17	1.292116E 07	0.0
18	1.292077E 07	0.0
19	1.156069E 07	0.0
20	1.116044E 07	0.0
21	1.116078E 07	0.0
22	1.099989E 07	0.0
23	1.099989E 07	0.0
24	1.100033E 07	0.0
25	1.084076E 07	0.0
26	1.068032E 07	0.0
27	9.320278E 06	0.0
28	9.160547E 06	0.0
29	9.160823E 06	0.0
30	9.160087E 06	0.0
31	9.000537E 06	0.0
32	8.841943E 06	0.0
33	8.680607E 06	0.0
34	7.829841E 06	0.0
35	7.830075E 06	0.0
36	7.670114E 06	0.0
37	7.670114E 06	0.0
38	7.329998E 06	0.0
39	7.329998E 06	0.0
40	7.169997E 06	0.0
41	7.169997E 06	0.0
42	7.169925E 06	0.0
43	7.169997E 06	0.0
44	7.169997E 06	0.0
45	6.829997E 06	0.0
46	6.829997E 06	0.0
47	6.829997E 06	0.0
48	6.669997E 06	0.0
49	6.669997E 06	0.0
50	6.669957E 06	0.0
51	6.329997E 06	0.0
52	6.329997E 06	0.0
53	6.329997E 06	0.0

CARBON CAPTURE ZERO EXCEPT AT LOW ENERGY

ESTIMATE IS MADE OF ENERGY RELEASED BY GAMMA-RAYS FROM NEUTRON CAPTURE (TEST MADE ONLY WITH A COUPLED MASTER)

(SOME OF THIS PRINTOUT OMITTED)

(RADE OUTPUT CONTINUED ON NEXT PAGE)

RADE OUTPUT (CONTINUED)

```
      114              4.803469E 06          0.0
      115              4.803567E 06          0.0
      116              4.803374E 06          0.0
      117              4.803999E 06          0.0
      118              4.803278E 06          0.0
      119              4.802990E 06          0.0
      120              4.804143E 06          0.0
      121              4.804720E 06          0.0
      122              4.804046E 06          0.0
      123              4.822490E 06          0.0
      124              4.804143E 06          0.0
      125              4.804046E 06          0.0
      126              4.803567E 06          0.0
      127              4.803999E 06          0.0
      128              4.805823E 06          4.276999E-07
      129              4.807698E 06          2.690400E-06
      130              4.806833E 06          4.604200E-06
      131              4.807024E 06          6.335999E-06
      132              4.804815E 06          7.530600E-06
      133              4.804190E 06          8.275199E-06
      134              4.810867E 06          9.320700E-06
      135              4.806608E 06          1.060400E-05
      136              4.820088E 06          1.254000E-05
      137              4.828157E 06          1.481000E-05
      138              4.832862E 06          1.661500E-05
      139              4.809811E 06          1.976499E-05
      140              4.814949E 06          2.311399E-05
      141              4.816150E 06          2.572099E-05
      142              4.815717E 06          2.777200E-05
      143              4.815958E 06          3.296899E-05
      144              4.852987E 06          3.949000E-05
      145              4.836850E 06          4.456799E-05
      146              4.852987E 06          4.852300E-05
      147              4.821768E 06          5.180799E-05
      148              4.852987E 06          6.070199E-05
      149              4.852987E 06          7.046699E-05
      150              4.852987E 06          7.807199E-05
      151              4.852987E 06          8.467799E-05
      152              4.850537E 06          9.726800E-05
      153              4.855485E 06          1.092700E-04
      154              4.852987E 06          1.244900E-04
      155              4.852939E 06          1.449900E-04
      156              4.853036E 06          1.610700E-04
      157              4.808993E 06          1.781400E-04
      158              4.812068E 06          2.020900E-04
      159              4.822297E 06          2.297900E-04
      160              4.835697E 06          2.591899E-04
      161              4.850825E 06          2.930898E-04
      162              4.854716E 06          3.337299E-04
      163              4.815093E 06          3.790399E-04
      164              4.852987E 06          4.252498E-04
      165              4.852939E 06          4.825899E-04
      166              4.836226E 06          5.467399E-04
      167              4.852987E 06          6.239899E-04
      168              4.852987E 06          7.000100E-04
      169              4.852987E 06          7.934598E-04
      170              9.702372E 06          1.249900E-03
      171              4.759382E 06          3.139100E-03
THIS NUCLIDE HAS THE FOLLOWING 1-D GAMMA PROCESSES
      602.      516.      504.      527.      501.      1527.
DEVIATION=-4.586216E-03 EXCEEDS TOLERANCE FOR TOTAL CHECK AVERAGE VALUE= 1.672198E 01 SUMMED VALUE= 1.664529E 01 GROUP  36
2-D GAMMA PROCESSES
        MT     LENGTH      ORDER
 1     504       471          5          0
 2     516        20          0          0
NUCLIDE          1274 HAS BEEN CHECKED
```

(REMAINDER OF RADE OUTPUT OMITTED)

(END OF RADE OUTPUT)

```
0$ ARRAY       2 ENTRIES READ
1$ ARRAY       4 ENTRIES READ
0T
```

DIAL (EDIT 1D CROSS SECTIONS FOR LI-6, LI-7)

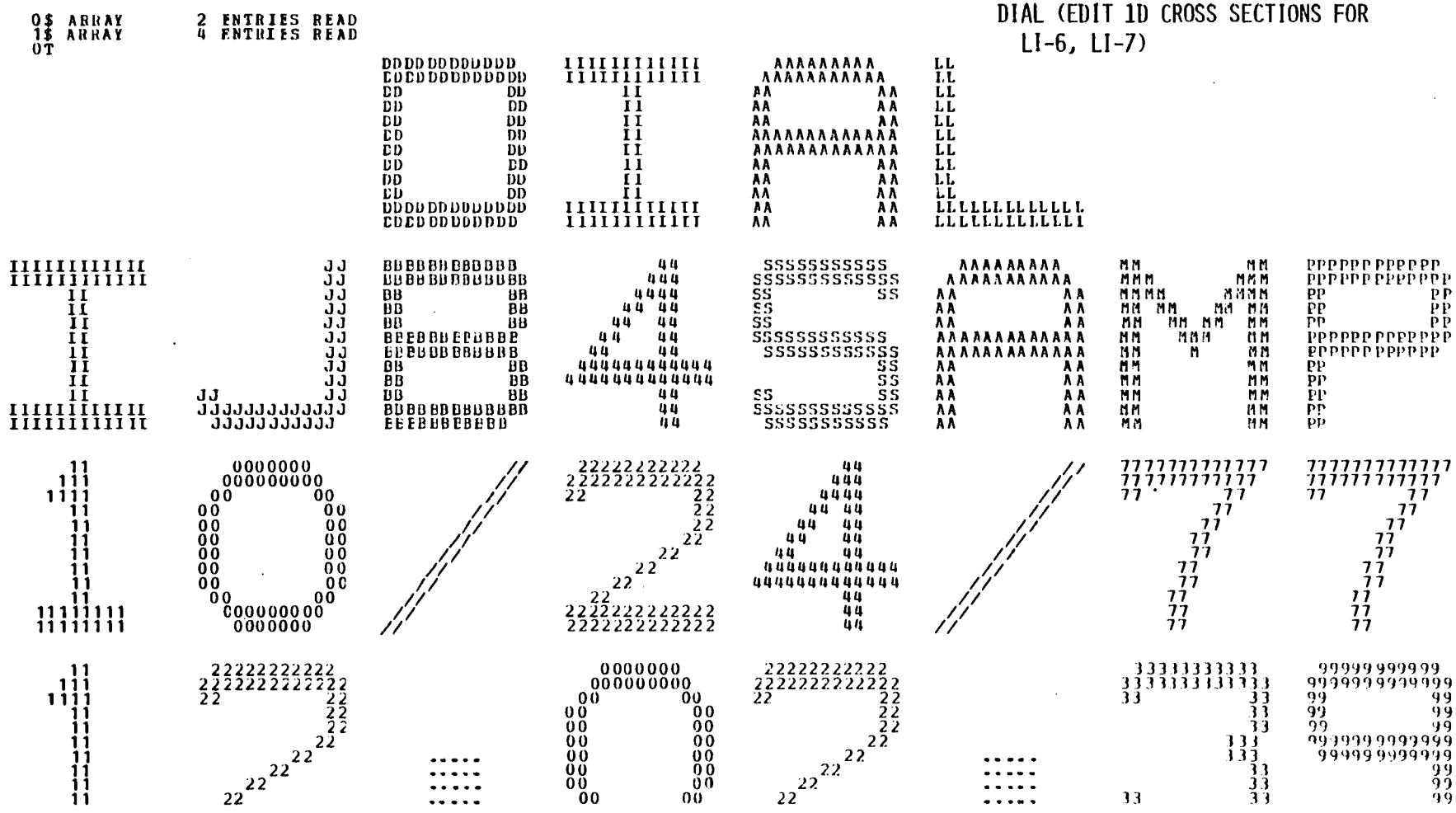

```
4$ ARRAY       2 ENTRIES READ
0T
TABLE OF CONTENTS FOR THE MASTER LIBRARY ON LOGICAL     1

  1     C-12 CASE FOR COMBINED CTR & CRDR PROCESSING                    1274
  2     NE-93 CASE FOR COMBINED CTR & CRDR PROCESSING                   1199
  3     LI-6  CASE FOR COMBINED CTR & CRDR PROCESSING                   1271
  4     LI-7  CASE FOR COMBINED CTR & CRDR PROCESSING                   1272
```

(GROUP STRUCTURE LISTING OMITTED)

(DIAL OUTPUT CONTINUED ON NEXT PAGE)

00093

DIAL OUTPUT (CONTINUED)

```
AMPX NUCLIDE      1274 C-12 CASE FOR COMBINED CTR & CRBR PROCESSING
    HAS THE FOLLOWING DATA
    0 RESOLVED RESONANCES                          0 UNRESOLVED RESONANCE POINTS
   15 TEMP IND 1-D NEUT PROCESSES                  3 2-D NEUT PROCESSES
    0 TEMP DEP 1-D NEUT PROCESSES                  6 1-D GAMMA PROCESSES
    2 2-D GAMMA PROCESSES                          2 2-D NEUT-TO-GAMMA PROCESSES
    4 BONDARENKO PROCESSES                         0 ENDF MAT OF FAST NEUT DATA
                                                   0 ENDF MAT OF THERMAL NEUT DATA
                                            1274 ENDF MAT OF YIELD DATA
   44 RECORDS FOR NUCLIDE                          6 ENDF MAT OF GAMMA DATA
AMPX NUCLIDE      1189 NB-93 CASE FOR COMBINED CTR & CRBR PROCESSING
    HAS THE FOLLOWING DATA
    0 RESOLVED RESONANCES                          0 UNRESOLVED RESONANCE POINTS
   30 TEMP IND 1-D NEUT PROCESSES                 17 2-D NEUT PROCESSES
    0 TEMP DEP 1-D NEUT PROCESSES                  6 1-D GAMMA PROCESSES
    2 2-D GAMMA PROCESSES                          2 2-D NEUT-TO-GAMMA PROCESSES
    4 BONDARENKO PROCESSES                         0 ENDF MAT OF FAST NEUT DATA
                                                   0 ENDF MAT OF THERMAL NEUT DATA


                                            1189 ENDF MAT OF YIELD DATA
   81 RECORDS FOR NUCLIDE                         41 ENDF MAT OF GAMMA DATA
AMPX NUCLIDE      1271 LI-6   CASE FOR COMBINED CTR & CRBR PROCESSING
    HAS THE FOLLOWING DATA
    0 RESOLVED RESONANCES                          0 UNRESOLVED RESONANCE POINTS
   17 TEMP IND 1-D NEUT PROCESSES                  4 2-D NEUT PROCESSES
    0 TEMP DEP 1-D NEUT PROCESSES                  6 1-D GAMMA PROCESSES
    2 2-D GAMMA PROCESSES                          2 2-D NEUT-TO-GAMMA PROCESSES
    4 BONDARENKO PROCESSES                         0 ENDF MAT OF FAST NEUT DATA
                                                   0 ENDF MAT OF THERMAL NEUT DATA
                                            1271 ENDF MAT OF YIELD DATA
   38 RECORDS FOR NUCLIDE                          3 ENDF MAT OF GAMMA DATA
1-D NEUTRON CROSS SECTIONS FOR LI-6   CASE FOR COMBINED CTR & CRBR PROCESSING
```

INFORMATION ABOUT EACH NUCLIDE ON TAPE DISPLAYED EVEN THOUGH NO EDIT REQUESTED

EDIT OF LI-6 CROSS SECTIONS

XSEC ID GRP.	1	2	4	20	52	91	102	1271 103
1	1.27370E 00	7.8535CE-01	3.80170E-01	8.21730E-02	5.00000E-03	3.75170E-01	1.03710E-05	5.35610E-03
2	1.30740E 00	8.1067CE-01	3.89360E-01	7.91900E-02	5.00000E-03	3.84350E-01	1.04700E-05	5.85100E-03
3	1.35750E 00	8.44240E-01	4.08560E-01	7.42890E-02	5.00000E-03	4.03560E-01	1.05940E-05	6.47140E-03
4	1.37880E 00	8.5666CE-01	4.18040E-01	7.27450E-02	5.00000E-03	4.13040E-01	1.06380E-05	6.75100E-03
5	1.39910E 00	8.68140E-01	4.2755CE-01	7.10860E-02	5.00000E-03	4.22550E-01	1.06790E-05	6.99020E-03
6	1.41880E 00	8.79510E-01	4.37020E-01	6.91160E-02	5.00000E-03	4.32020E-01	1.07180E-05	7.19520E-03
7	1.43820E 00	8.92140E-01	4.44840E-01	6.71790E-02	5.00000E-03	4.39840E-01	1.07570E-05	7.44280E-03
8	1.45960E 00	9.05510E-01	4.53630E-01	6.53750E-02	5.00000E-03	4.48630E-01	1.07990E-05	7.72410E-03
9	1.50710E 00	9.31170E-01	4.77810E-01	6.09060E-02	5.00000E-03	4.72810E-01	1.08370E-05	8.38670E-03
10	1.55660E 00	9.58460E-01	5.02620E-01	5.50600E-02	5.00000E-03	4.97620E-01	1.09710E-05	9.06160E-03
11	1.59970E 00	9.8169CE-01	5.25840E-01	4.93260E-02	5.00000E-03	5.20840E-01	1.10410E-05	9.56980E-03
12	1.64040E 00	1.00380E 00	5.48220E-01	4.33580E-02	5.00000E-03	5.43220E-01	1.11070E-05	1.01200E-02
13	1.67720E 00	1.02430E 00	5.68130E-01	3.70520E-02	5.00000E-03	5.63130E-01	1.11700E-05	1.06950E-02
14	1.71550E 00	1.0473CE 00	5.86940E-01	3.09160E-02	5.00000E-03	5.81940E-01	1.12320E-05	1.13080E-02
15	1.75350E 00	1.07160E 00	6.03920E-01	2.47590E-02	5.00000E-03	5.98920E-01	1.12890E-05	1.18780E-02
16	1.78710E 00	1.0930CE 00	6.18970E-01	1.84390E-02	5.00000E-03	6.13970E-01	1.13430E-05	1.24040E-02
17	1.81640E 00	1.11370E 00	6.29900E-01	1.29250E-02	5.00000E-03	6.24900E-01	1.13940E-05	1.32300E-02
18	1.84660E 00	1.13730E 00	6.37180E-01	8.79000E-03	5.00000E-03	6.32180E-01	1.14430E-05	1.40880E-02
19	1.87570E 00	1.1603CE 00	6.43150E-01	5.03420E-03	5.03930E-03	6.38110E-01	1.14900E-05	1.51530E-02
20	1.90350E 00	1.1807CE 00	6.49250E-01	2.24200E-03	5.29340E-03	6.43950E-01	1.15340E-05	1.63420E-02
21	1.93130E 00	1.19980E 00	6.54800E-01	6.66910E-04	5.60140E-03	6.49200E-01	1.15770E-05	1.76110E-02
22	1.95020E 00	1.2129CE 00	6.58020E-01	9.14950E-05	5.77360E-03	6.52240E-01	1.16030E-05	1.84720E-02
23	1.96360E 00	1.2219CE 00	6.60320E-01	0.0	5.86180E-03	6.54460E-01	1.16230E-05	1.91570E-02
24	1.98380E 00	1.23790E 00	6.60120E-01	0.0	5.99220E-03	6.54130E-01	1.16550E-05	2.04220E-02
25	2.00660E 00	1.2577CE 00	6.57630E-01	0.0	6.16700E-03	6.51470E-01	1.16910E-05	2.21470E-02
26	2.02830E 00	1.2763CE 00	6.54940E-01	0.0	6.38740E-03	6.48560E-01	1.17260E-05	2.42550E-02
27	2.05080E 00	1.29310E 00	6.53170E-01	0.0	6.64940E-03	6.46520E-01	1.17590E-05	2.65780E-02
28	2.07240E 00	1.31130E 00	6.50230E-01	0.0	6.92400E-03	6.43310E-01	1.17900E-05	2.90520E-02
29	2.09050E 00	1.32690E 00	6.49000E-01	0.0	8.05460E-03	6.40950E-01	1.18200E-05	2.84180E-02
30	2.10590E 00	1.34120E 00	6.44870E-01	0.0	6.99070E-03	6.37880E-01	1.18480E-05	2.86000E-02
31	2.12450E 00	1.3652CE 00	6.25570E-01	0.0	1.67720E-03	6.23900E-01	1.18990E-05	3.43910E-02
32	2.12740E 00	1.3963CE 00	5.91330E-01	0.0	0.0	5.91320E-01	1.19370E-05	2.80940E-02
33	2.08650E 00	1.42770E 00	5.22680E-01	0.0	0.0	5.22680E-01	1.19910E-05	1.13130E-02
34	2.01670E 00	1.44160E 00	4.39830E-01	0.0	0.0	4.39830E-01	1.20120E-05	1.31060E-03
35	1.94300E 00	1.4408CE 00	3.62050E-01	0.0	0.0	3.62050E-01	1.20310E-05	0.0
36	1.85700E 00	1.42660E 00	2.81300E-01	0.0	0.0	2.81300E-01	1.20490E-05	0.0
37	1.77800E 00	1.4009CE 00	2.18030E-01	0.0	0.0	2.18030E-01	1.20660E-05	0.0
38	1.71130E 00	1.3673CE 00	1.73820E-01	0.0	0.0	1.73820E-01	1.20820E-05	0.0
39	1.65400E 00	1.33240E 00	1.38270E-01	0.0	0.0	1.38270E-01	1.20980E-05	0.0
40	1.59980E 00	1.29230E 00	1.13530E-01	0.0	0.0	1.13530E-01	1.21100E-05	0.0
41	1.57540E 00	1.2733CE 00	1.01810E-01	0.0	0.0	1.01810E-01	1.21160E-05	0.0
42	1.56690E 00	1.26720E 00	9.68710E-02	0.0	0.0	9.68710E-02	1.21190E-05	0.0
43	1.55430E 00	1.2581CE 00	8.95590E-02	0.0	0.0	8.95590E-02	1.21220E-05	0.0
44	1.52920E 00	1.2396CE 00	7.64740E-02	0.0	0.0	7.64740E-02	1.21290E-05	0.0
45	1.48840E 00	1.20870E 00	5.70490E-02	0.0	0.0	5.70490E-02	1.21400E-05	0.0

(DIAL OUTPUT CONTINUED ON NEXT PAGE)

00094

DIAL OUTPUT (CONTINUED)

46	1.44130E 00	1.17100E 00	3.63720E-02	0.0	0.0	3.63720E-02	1.21530E-05	0.0
47	1.39490E 00	1.12950E 00	2.13970E-02	0.0	0.0	2.13970E-02	1.21650E-05	0.0
48	1.34330E 00	1.07900E 00	1.12430E-02	0.0	0.0	1.12430E-02	1.21760E-05	0.0
49	1.29340E 00	1.02890E 00	4.66760E-03	0.0	0.0	4.66760E-03	1.21870E-05	0.0
50	1.25710E 00	9.93870E-01	1.65120E-04	0.0	0.0	1.65120E-04	1.21980E-05	0.0
51	1.23570E 00	9.75340E-01	0.0	0.0	0.0	0.0	1.22080E-05	0.0
52	1.22310E 00	9.67280E-01	0.0	0.0	0.0	0.0	1.22170E-05	0.0
53	1.21670E 00	9.64970E-01	0.0	0.0	0.0	0.0	1.22260E-05	0.0
54	1.21490E 00	9.66230E-01	0.0	0.0	0.0	0.0	1.22350E-05	0.0
55	1.21740E 00	9.70550E-01	0.0	0.0	0.0	0.0	1.22430E-05	0.0
56	1.22310E 00	9.77190E-01	0.0	0.0	0.0	0.0	1.22510E-05	0.0
57	1.23090E 00	9.85270E-01	0.0	0.0	0.0	0.0	1.22580E-05	0.0
58	1.24180E 00	9.95510E-01	0.0	0.0	0.0	0.0	1.22650E-05	0.0
59	1.26200E 00	1.01360E 00	0.0	0.0	0.0	0.0	1.22750E-05	0.0
60	1.28470E 00	1.03300E 00	0.0	0.0	0.0	0.0	1.22830E-05	0.0
61	1.30410E 00	1.04910E 00	0.0	0.0	0.0	0.0	1.22890E-05	0.0
62	1.32700E 00	1.06790E 00	0.0	0.0	0.0	0.0	1.22950E-05	0.0
63	1.35240E 00	1.08840E 00	0.0	0.0	0.0	0.0	1.23000E-05	0.0
64	1.37800E 00	1.10890E 00	0.0	0.0	0.0	0.0	1.23050E-05	0.0
65	1.41170E 00	1.13540E 00	0.0	0.0	0.0	0.0	1.23100E-05	0.0
66	1.44510E 00	1.16160E 00	0.0	0.0	0.0	0.0	1.23140E-05	0.0
67	1.48130E 00	1.18980E 00	0.0	0.0	0.0	0.0	1.23190E-05	0.0
68	1.52500E 00	1.22360E 00	0.0	0.0	0.0	0.0	1.23230E-05	0.0
69	1.57620E 00	1.26280E 00	0.0	0.0	0.0	0.0	1.23270E-05	0.0
70	1.63320E 00	1.30630E 00	0.0	0.0	0.0	0.0	1.23300E-05	0.0
71	1.69990E 00	1.35680E 00	0.0	0.0	0.0	0.0	1.23340E-05	0.0
72	1.77840E 00	1.41600E 00	0.0	0.0	0.0	0.0	1.23370E-05	0.0
73	1.86760E 00	1.48290E 00	0.0	0.0	0.0	0.0	1.23400E-05	0.0
74	2.03450E 00	1.60710E 00	0.0	0.0	0.0	0.0	1.23450E-05	0.0
75	2.34790E 00	1.83790E 00	0.0	0.0	0.0	0.0	1.23500E-05	0.0
76	2.67520E 00	2.07640E 00	0.0	0.0	0.0	0.0	1.23540E-05	0.0
77	2.97130E 00	2.28980E 00	0.0	0.0	0.0	0.0	1.23560E-05	0.0
78	3.59860E 00	2.73640E 00	0.0	0.0	0.0	0.0	1.23590E-05	0.0
79	4.91190E 00	3.65260E 00	0.0	0.0	0.0	0.0	1.23630E-05	0.0
80	5.96190E 00	4.37180E 00	0.0	0.0	0.0	0.0	1.23650E-05	0.0
81	6.14880E 00	4.49810E 00	0.0	0.0	0.0	0.0	1.23660E-05	0.0
82	6.30890E 00	4.60590E 00	0.0	0.0	0.0	0.0	1.23660E-05	0.0
83	6.74630E 00	4.89870E 00	0.0	0.0	0.0	0.0	1.23660E-05	0.0
84	7.81050E 00	5.59950E 00	0.0	0.0	0.0	0.0	1.23680E-05	0.0
85	9.90390E 00	6.89920E 00	0.0	0.0	0.0	0.0	1.23700E-05	0.0
86	1.07650E 01	7.27270E 00	0.0	0.0	0.0	0.0	1.25840E-05	0.0
87	9.86650E 00	6.53230E 00	0.0	0.0	0.0	0.0	1.31910E-05	0.0
88	8.31930E 00	5.37400E 00	0.0	0.0	0.0	0.0	1.37790E-05	0.0
89	6.69620E 00	4.23060E 00	0.0	0.0	0.0	0.0	1.43380E-05	0.0
90	5.36050E 00	3.31660E 00	0.0	0.0	0.0	0.0	1.48700E-05	0.0
91	4.33860E 00	2.63190E 00	0.0	0.0	0.0	0.0	1.53750E-05	0.0
92	3.58860E 00	2.13810E 00	0.0	0.0	0.0	0.0	1.58570E-05	0.0
93	3.04440E 00	1.78520E 00	0.0	0.0	0.0	0.0	1.63140E-05	0.0
94	2.64770E 00	1.53160E 00	0.0	0.0	0.0	0.0	1.67490E-05	0.0
95	2.35550E 00	1.34670E 00	0.0	0.0	0.0	0.0	1.71630E-05	0.0
96	2.13480E 00	1.20830E 00	0.0	0.0	0.0	0.0	1.75570E-05	0.0
97	1.96610E 00	1.10320E 00	0.0	0.0	0.0	0.0	1.79320E-05	0.0
98	1.83910E 00	1.02440E 00	0.0	0.0	0.0	0.0	1.82880E-05	0.0
99	1.74090E 00	9.63290E-01	0.0	0.0	0.0	0.0	1.86270E-05	0.0
100	1.66200E 00	9.14010E-01	0.0	0.0	0.0	0.0	1.89500E-05	0.0
101	1.60310E 00	8.76550E-01	0.0	0.0	0.0	0.0	1.92560E-05	0.0
102	1.52820E 00	8.27700E-01	0.0	0.0	0.0	0.0	1.97550E-05	0.0
103	1.46380E 00	7.81780E-01	0.0	0.0	0.0	0.0	2.04360E-05	0.0
104	1.43930E 00	7.60640E-01	0.0	0.0	0.0	0.0	2.16810E-05	0.0
105	1.43060E 00	7.52190E-01	0.0	0.0	0.0	0.0	2.26520E-05	0.0

(DIAL OUTPUT CONTINUED ON NEXT PAGE)

DIAL OUTPUT (CONTINUED)

106	1.42500E 00	7.42260E-01	0.0	0.0	0.0	0.0	2.41230E-05	0.0
107	1.42190E 00	7.32140E-01	0.0	0.0	0.0	0.0	2.57950E-05	0.0
108	1.43080E 00	7.22890E-01	0.0	0.0	0.0	0.0	2.79730E-05	0.0
109	1.44800E 00	7.15890E-01	0.0	0.0	0.0	0.0	3.00040E-05	0.0
110	1.46600E 00	7.12260E-01	0.0	0.0	0.0	0.0	3.14370E-05	0.0
111	1.49590E 00	7.09340E-01	0.0	0.0	0.0	0.0	3.30450E-05	0.0
112	1.53980E 00	7.07540E-01	0.0	0.0	0.0	0.0	3.47210E-05	0.0
113	1.58200E 00	7.06640E-01	0.0	0.0	0.0	0.0	3.59530E-05	0.0
114	1.61580E 00	7.06500E-01	0.0	0.0	0.0	0.0	3.67630E-05	0.0
115	1.64940E 00	7.06340E-01	0.0	0.0	0.0	0.0	3.74260E-05	0.0
116	1.66760E 00	7.06350E-01	0.0	0.0	0.0	0.0	3.77690E-05	0.0
117	1.68420E 00	7.06370E-01	0.0	0.0	0.0	0.0	3.89300E-05	0.0
118	1.70110E 00	7.06440E-01	0.0	0.0	0.0	0.0	4.02960E-05	0.0
119	1.71370E 00	7.06520E-01	0.0	0.0	0.0	0.0	4.11610E-05	0.0
120	1.73800E 00	7.06780E-01	0.0	0.0	0.0	0.0	4.28390E-05	0.0
121	1.78390E 00	7.06970E-01	0.0	0.0	0.0	0.0	4.59540E-05	0.0
122	1.88610E 00	7.07780E-01	0.0	0.0	0.0	0.0	5.09930E-05	0.0
123	2.03080E 00	7.09190E-01	0.0	0.0	0.0	0.0	5.64600E-05	0.0
124	2.20050E 00	7.10190E-01	0.0	0.0	0.0	0.0	6.13740E-05	0.0
125	2.39480E 00	7.11620E-01	0.0	0.0	0.0	0.0	7.17240E-05	0.0
126	2.61520E 00	7.12400E-01	0.0	0.0	0.0	0.0	8.14130E-05	0.0
127	2.86660E 00	7.13570E-01	0.0	0.0	0.0	0.0	8.93030E-05	0.0
128	3.08740E 00	7.14160E-01	0.0	0.0	0.0	0.0	1.01290E-04	0.0
129	3.24650E 00	7.14670E-01	0.0	0.0	0.0	0.0	1.10350E-04	0.0
130	3.36800E 00	7.15690E-01	0.0	0.0	0.0	0.0	1.16820E-04	0.0
131	3.51080E 00	7.15330E-01	0.0	0.0	0.0	0.0	1.22670E-04	0.0
132	3.61980E 00	7.15550E-01	0.0	0.0	0.0	0.0	1.26700E-04	0.0
133	3.68780E 00	7.15680E-01	0.0	0.0	0.0	0.0	1.29210E-04	0.0
134	3.79360E 00	7.16480E-01	0.0	0.0	0.0	0.0	1.32740E-04	0.0
135	3.95290E 00	7.16100E-01	0.0	0.0	0.0	0.0	1.37070E-04	0.0
136	4.25550E 00	7.16510E-01	0.0	0.0	0.0	0.0	1.47010E-04	0.0
137	4.72860E 00	7.17130E-01	0.0	0.0	0.0	0.0	1.70750E-04	0.0
138	5.25090E 00	7.17260E-01	0.0	0.0	0.0	0.0	1.90640E-04	0.0
139	5.86450E 00	7.18050E-01	0.0	0.0	0.0	0.0	2.12710E-04	0.0
140	6.55170E 00	7.18460E-01	0.0	0.0	0.0	0.0	2.40750E-04	0.0
141	7.32280E 00	7.18780E-01	0.0	0.0	0.0	0.0	2.75890E-04	0.0
142	8.20810E 00	7.18870E-01	0.0	0.0	0.0	0.0	3.10590E-04	0.0
143	9.20720E 00	7.19350E-01	0.0	0.0	0.0	0.0	3.49100E-04	0.0
144	1.03270E 01	7.19610E-01	0.0	0.0	0.0	0.0	3.95830E-04	0.0
145	1.16150E 01	7.19810E-01	0.0	0.0	0.0	0.0	4.48310E-04	0.0
146	1.31200E 01	7.19970E-01	0.0	0.0	0.0	0.0	5.09380E-04	0.0
147	1.47070E 01	7.20090E-01	0.0	0.0	0.0	0.0	5.79210E-04	0.0
148	1.66290E 01	7.21200E-01	0.0	0.0	0.0	0.0	6.52550E-04	0.0
149	1.87430E 01	7.20400E-01	0.0	0.0	0.0	0.0	7.36960E-04	0.0
150	2.11130E 01	7.21200E-01	0.0	0.0	0.0	0.0	8.35410E-04	0.0
151	2.38360E 01	7.20640E-01	0.0	0.0	0.0	0.0	9.46990E-04	0.0
152	2.68750E 01	7.20720E-01	0.0	0.0	0.0	0.0	1.07180E-03	0.0
153	3.03070E 01	7.20630E-01	0.0	0.0	0.0	0.0	1.21570E-03	0.0
154	3.43400E 01	7.20820E-01	0.0	0.0	0.0	0.0	1.38230E-03	0.0
155	3.88680E 01	7.20860E-01	0.0	0.0	0.0	0.0	1.55730E-03	0.0
156	4.38900E 01	7.20890E-01	0.0	0.0	0.0	0.0	1.76550E-03	0.0
157	4.97030E 01	7.20920E-01	0.0	0.0	0.0	0.0	2.00020E-03	0.0
158	5.62380E 01	7.20980E-01	0.0	0.0	0.0	0.0	2.26720E-03	0.0
159	6.36340E 01	7.21020E-01	0.0	0.0	0.0	0.0	2.57050E-03	0.0
160	7.18950E 01	7.21060E-01	0.0	0.0	0.0	0.0	2.91350E-03	0.0
161	8.15460E 01	7.21080E-01	0.0	0.0	0.0	0.0	3.30200E-03	0.0
162	9.21000E 01	7.21100E-01	0.0	0.0	0.0	0.0	3.74640E-03	0.0
163	1.04380E 02	7.21470E-01	0.0	0.0	0.0	0.0	4.24670E-03	0.0
164	1.18190E 02	7.21130E-01	0.0	0.0	0.0	0.0	4.80900E-03	0.0
165	1.33900E 02	7.21140E-01	0.0	0.0	0.0	0.0	5.45150E-03	0.0
166	1.51450E 02	7.21060E-01	0.0	0.0	0.0	0.0	6.17920E-03	0.0
167	1.71750E 02	7.21170E-01	0.0	0.0	0.0	0.0	7.00300E-03	0.0
168	1.94800E 02	7.21180E-01	0.0	0.0	0.0	0.0	7.93570E-03	0.0
169	2.19830E 02	7.21200E-01	0.0	0.0	0.0	0.0	8.99590E-03	0.0
170	3.46500E 02	7.21060E-01	0.0	0.0	0.0	0.0	1.41430E-02	0.0
171	8.74170E 02	7.21250E-01	0.0	0.0	0.0	0.0	3.57700E-02	0.0

(REMAINDER OF DIAL OUTPUT OMITTED)

(END OF DIAL OUTPUT)

```
COPYING FROM F101F022 TO FT02F022
PRINT
```

MALOCS (COLLAPSE COUPLED AMPX MASTER FROM 171N,36G TO 100N,21G)

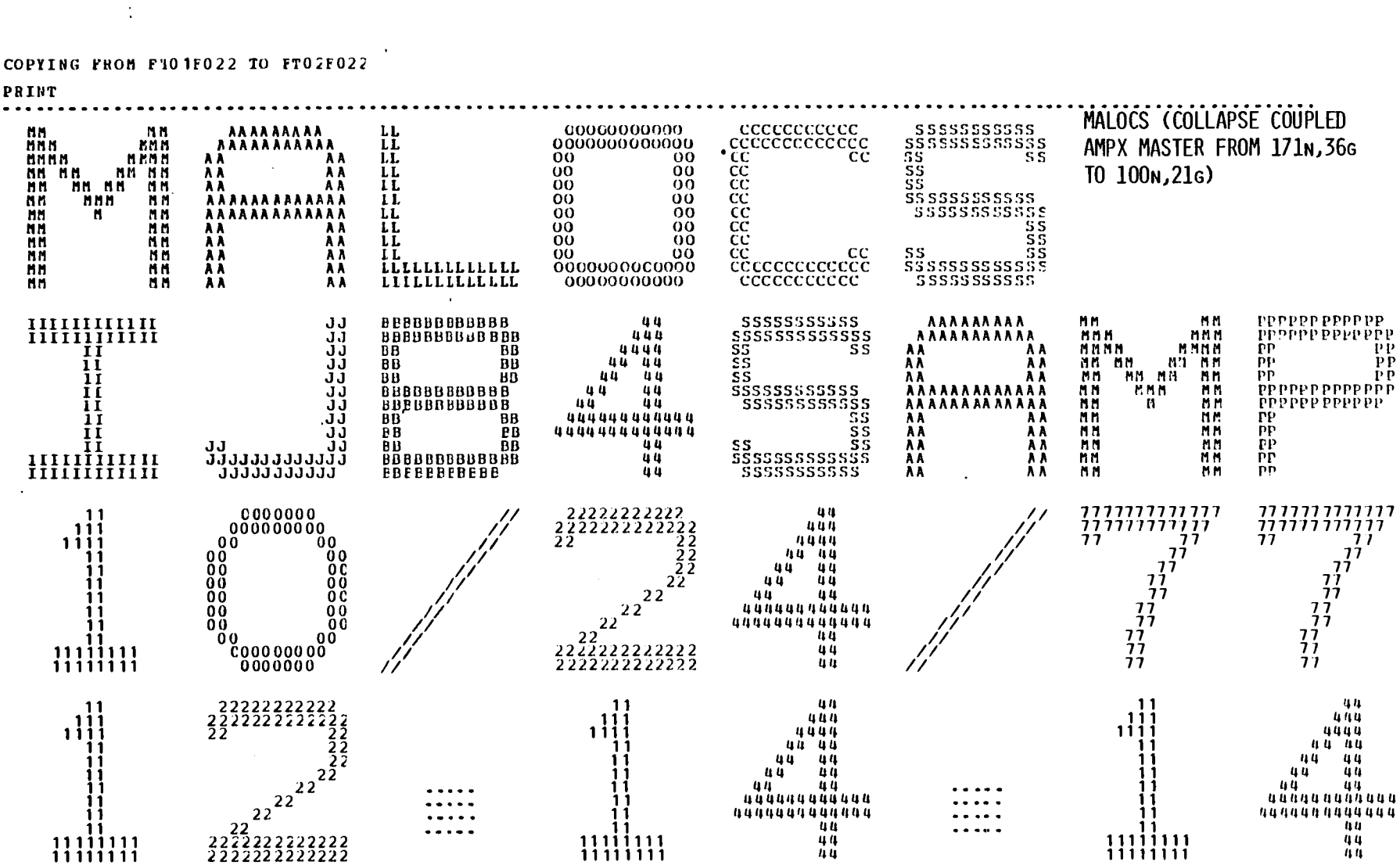

(MALOCS OUTPUT CONTINUED ON NEXT PAGE)

DLC-41: OUTPUT FROM JOB2 OF THE CTR STANDARD BLANKET SAMPLE PROBLEM (10 OF 15)

MALOCS OUTPUT (CONTINUED)

```
     1$ ARRAY       6 ENTRIES READ
     3$ ARRAY      10 ENTRIES READ
     OT
     4$ ARRAY     171 ENTRIES READ
     5U ARRAY     171 ENTRIES READ
     6$ ARRAY      36 ENTRIES READ
     7* ARRAY      36 ENTRIES READ
     OT
AMPX MASTER LIBRARY NUMBER12963
NUMBER OF NUCLIDES     4
NUMBER OF NEUTRON GROUPS   171
FIRST THERMAL GROUP   171
NUMBER OF GAMMA GROUPS    36


NEUTRON WEIGHTING OPTION     0
GAMMA WEIGHTING OPTION     0
MALOCS REQUIRES 21605 LOCATIONS OUT OF 23552 ALLOCATED FOR THIS CASE
NEUTRON GROUP DEFINITIONS AND WEIGHTING FLUXES
FINE GROUP          UPPER ENERGY        UPPER LETHARGY          GROUP FLUX          BROAD GROUP
         1          1.733299E 07        -5.500267E-01        5.004000E-02              0
         2          1.648700E 07        -4.999871E-01        5.000000E-02              0
         3          1.568300E 07        -4.499922E-01        1.610000E 00              0
         4          1.491800E 07        -3.999835E-01        1.096000E 01              1
         5          1.455000E 07        -3.750060E-01        3.293999E 01              1
         6          1.419100E 07        -3.500229E-01        4.281999E 01              1
         7          1.384000E 07        -3.249780E-01        2.453999E 01              1
         8          1.349900E 07        -3.000305E-01        7.207999E 00              2
         9          1.284000E 07        -2.499803E-01        7.198995E-02              2
        10          1.221400E 07        -1.999978E-01        5.003000E-02              3
        11          1.161800E 07        -1.499706E-01        4.994000E-02              3
        12          1.105200E 07        -1.000263E-01        5.000000E-02              4
        13          1.051300E 07        -5.002754E-02        5.003000E-02              4
        14          1.000000E 07         0.0                 5.757000E-02              5
        15          9.512300E 06         4.999851E-02        7.497996E-02              5
        16          9.048400E 06         9.999681E-02        9.607995E-02              6
        17          8.607100E 06         1.499971E-01        1.212000E-01              6
        18          8.187300E 06         2.000003E-01        1.506000E-01              7
        19          7.788000E 06         2.500005E-01        1.844000E-01              7
        20          7.408200E 06         2.999975E-01        2.230000E-01              8
        21          7.046900E 06         3.499972E-01        2.660000E-01              8
        22          6.703200E 06         3.999996E-01        9.899998E-02              9
        23          6.592400E 06         4.166676E-01        2.145000E-01              9
        24          6.376300E 06         4.499967E-01        3.651000E-01              9
        25          6.065300E 06         5.000008E-01        4.206000E-01             10
        26          5.769500E 06         5.499992E-01        4.796000E-01             10
        27          5.488100E 06         6.000026E-01        5.409999E-01             11
        28          5.220500E 06         6.499915E-01        6.050000E-01             11
        29          4.965900E 06         6.999902E-01        6.698999E-01             12
        30          4.723700E 06         7.499927E-01        7.362000E-01             12
        31          4.493300E 06         7.999976E-01        1.667999E 00             13
        32          4.065700E 06         8.999990E-01        1.919000E 00             14
        33          3.678800E 06         9.999983E-01        2.148000E 00             15
        34          3.328700E 06         1.100002E 00        1.150000E 00             16
        35          3.166400E 06         1.149989E 00        1.195000E 00             16
        36          3.011900E 06         1.200013E 00        1.235000E 00             17
```

NOTE THAT THE ENERGY REGION ABOVE 14.92 MeV WAS ELIMINATED FROM THE BROAD GROUP STRUCTURE

(MALOCS OUTPUT CONTINUED ON NEXT PAGE)

MALOCS OUTPUT (CONTINUED)

37	2.865000E 06	1.250016E 00	1.270000E 00	17
38	2.725300E 06	1.300006E 00	1.297999E 00	18
39	2.592400E 06	1.350000E 00	1.320999E 00	18
40	2.466000E 06	1.399987E 00	8.900999E-01	19
41	2.385200E 06	1.433302E 00	2.248999E-01	19
42	2.365300E 06	1.441680E 00	2.237000E-01	19
43	2.345700E 06	1.450001E 00	4.493000E-01	19
44	2.306900E 06	1.466680E 00	9.003000E-01	19
45	2.231300E 06	1.500000E 00	1.355000E 00	20
46	2.122500E 06	1.549990E 00	1.356999E 00	20
47	2.019000E 06	1.599982E 00	1.355000E 00	21
48	1.920500E 06	1.649999E 00	1.346999E 00	21
49	1.826800E 06	1.700019E 00	1.332999E 00	22
50	1.737700E 06	1.750022E 00	1.313999E 00	22
51	1.653000E 06	1.799993E 00	1.292999E 00	23
52	1.572400E 06	1.849981E 00	1.270000E 00	23
53	1.495700E 06	1.899990E 00	1.242999E 00	24
54	1.422700E 06	1.950028E 00	1.212000E 00	24
55	1.353400E 06	1.999965E 00	1.181999E 00	25
56	1.287300E 06	2.050037E 00	1.145000E 00	25
57	1.224600E 06	2.099971E 00	1.113000E 00	26
58	1.164800E 06	2.150035E 00	1.075000E 00	26
59	1.108000E 06	2.200028E 00	2.037000E 00	27
60	1.002600E 06	2.299988E 00	8.044000E-01	28
61	9.616400E 05	2.341700E 00	1.080000E 00	28
62	9.071800E 05	2.400000E 00	8.839999E-01	29
63	8.629400E 05	2.449995E 00	8.462000E-01	29
64	8.208500E 05	2.500000E 00	5.101000E-02	30
65	7.808200E 05	2.549995E 00	5.000000E-02	30
66	7.427400E 05	2.599994E 00	5.001000E-02	31
67	7.065100E 05	2.650002E 00	4.999000E-02	31
68	6.720600E 05	2.699992E 00	5.000000E-02	32
69	6.392800E 05	2.749997E 00	5.000000E-02	32
70	6.081000E 05	2.800000E 00	5.000000E-02	33
71	5.784400E 05	2.850005E 00	5.000000E-02	33
72	5.502300E 05	2.900003E 00	4.999000E-02	34
73	5.234000E 05	2.949993E 00	5.001000E-02	34
74	4.978700E 05	3.000001E 00	9.999996E-02	35
75	4.504900E 05	3.100004E 00	9.999996E-02	36
76	4.076200E 05	3.200005E 00	5.000000E-02	37
77	3.877400E 05	3.250005E 00	5.000000E-02	37
78	3.688300E 05	3.300004E 00	9.999996E-02	38
79	3.337300E 05	3.400008E 00	9.999996E-02	39
80	3.019700E 05	3.500012E 00	1.156000E-02	40
81	2.985000E 05	3.511570E 00	4.363999E-03	40
82	2.972000E 05	3.515935E 00	9.057999E-03	40
83	2.945200E 05	3.524993E 00	2.499000E-02	40
84	2.872500E 05	3.549987E 00	5.000000E-02	40
85	2.732400E 05	3.599990E 00	9.998995E-02	41
86	2.472400E 05	3.699981E 00	5.001000E-02	42
87	2.351800E 05	3.749989E 00	5.000000E-02	42
88	2.237100E 05	3.799990E 00	5.000000E-02	43
89	2.128000E 05	3.849987E 00	5.001000E-02	43
90	2.024200E 05	3.899995E 00	4.999000E-02	44
91	1.925500E 05	3.949985E 00	4.999000E-02	44
92	1.831600E 05	3.999980E 00	5.004000E-02	45
93	1.742200E 05	4.050021E 00	4.996000E-02	45
94	1.657300E 05	4.099980E 00	5.005000E-02	46
95	1.576400E 05	4.150026E 00	4.994000E-02	46
96	1.499600E 05	4.199971E 00	5.004000E-02	47

(MALOCS OUTPUT CONTINUED ON NEXT PAGE)

00099

DLC-41: OUTPUT FROM JOB2 OF THE CTR STANDARD BLANKET SAMPLE PROBLEM (12 OF 15)

MALOCS OUTPUT (CONTINUED)

97	1.426400E 05	4.250016E 00	4.995000E-02	47
98	1.356900E 05	4.299967E 00	5.002000E-02	48
99	1.290700E 05	4.349985E 00	5.004000E-02	48
100	1.227700E 05	4.400027E 00	4.993000E-02	49
101	1.167900E 05	4.449963E 00	5.004000E-02	49
102	1.110900E 05	4.499999E 00	1.250000E-01	50
103	9.803700E 04	4.624995E 00	1.250000E-01	50
104	8.651700E 04	4.749999E 00	4.754000E-02	51
105	8.250000E 04	4.797542E 00	3.704000E-02	51
106	7.950000E 04	4.834583E 00	9.908998E-02	51
107	7.200000E 04	4.933674E 00	6.632996E-02	51
108	6.737900E 04	5.000007E 00	1.750000E-01	52
109	5.656200E 04	5.175003E 00	7.499999E-02	52
110	5.247500E 04	5.250004E 00	1.250000E-01	53
111	4.630900E 04	5.375004E 00	1.250000E-01	53
112	4.086800E 04	5.499993E 00	1.750000E-01	54
113	3.430700E 04	5.674991E 00	7.499999E-02	54
114	3.182800E 04	5.749994E 00	1.104000E-01	55
115	2.850000E 04	5.860435E 00	5.407000E-02	55
116	2.700000E 04	5.914503E 00	3.551000E-02	55
117	2.605800E 04	5.950015E 00	4.996000E-02	55
118	2.478800E 04	5.999981E 00	2.500000E-02	56
119	2.417600E 04	6.024980E 00	2.500000E-02	56
120	2.357900E 04	6.049983E 00	7.500994E-02	56
121	2.187500E 04	6.124996E 00	1.250000E-01	56
122	1.930500E 04	6.249976E 00	2.500000E-01	57
123	1.503400E 04	6.500026E 00	2.500000E-01	58
124	1.170900E 04	6.749983E 00	2.500000E-01	59
125	9.118797E 03	7.000003E 00	2.500000E-01	60
126	7.101699E 03	7.250007E 00	2.500000E-01	61
127	5.530797E 03	7.500009E 00	2.500000E-01	62
128	4.307398E 03	7.750007E 00	1.500000E-01	63
129	3.707400E 03	7.900010E 00	9.999996E-02	63
130	3.354600E 03	8.000008E 00	9.998995E-02	64
131	3.035400E 03	8.099998E 00	9.999996E-02	64
132	2.746500E 03	8.200013E 00	4.998000E-02	64
133	2.612600E 03	8.249994E 00	4.999000E-02	65
134	2.485200E 03	8.299988E 00	9.999996E-02	65
135	2.248700E 03	8.399988E 00	9.999996E-02	65
136	2.034700E 03	8.499991E 00	2.500000E-01	66
137	1.584600E 03	8.750009E 00	2.500000E-01	67
138	1.234100E 03	8.999999E 00	2.500000E-01	68
139	9.611199E 02	9.249996E 00	2.500000E-01	69
140	7.485198E 02	9.499998E 00	2.500000E-01	70
141	5.829500E 02	9.749994E 00	2.500000E-01	71
142	4.540000E 02	9.999999E 00	2.500000E-01	72
143	3.535798E 02	1.024999E 01	2.500000E-01	73
144	2.753599E 02	1.050002E 01	2.500000E-01	74
145	2.144500E 02	1.075002E 01	2.500000E-01	75
146	1.670200E 02	1.099998E 01	2.500000E-01	76
147	1.300700E 02	1.125002E 01	2.500000E-01	77
148	1.013000E 02	1.150001E 01	2.500000E-01	78
149	7.889299E 01	1.175000E 01	2.500000E-01	79
150	6.144199E 01	1.200000E 01	2.500000E-01	80
151	4.785100E 01	1.225000E 01	2.500000E-01	81
152	3.726700E 01	1.249999E 01	2.438000E-01	82
153	2.920299E 01	1.274382E 01	2.562000E-01	83
154	2.260300E 01	1.300001E 01	2.500000E-01	84
155	1.760300E 01	1.325003E 01	2.499000E-01	85
156	1.371000E 01	1.349997E 01	2.500000E-01	86

(MALOCS OUTPUT CONTINUED ON NEXT PAGE)

MALOCS OUTPUT (CONTINUED)

157	1.067700E 01	1.375000E 01	2.500000E-01	87
158	8.315300E 00	1.400000E 01	2.500000E-01	88
159	6.476000E 00	1.424999E 01	2.500000E-01	89
160	5.043500E 00	1.450000E 01	2.500000E-01	90
161	3.927899E 00	1.474999E 01	2.500000E-01	91
162	3.058999E 00	1.500001E 01	2.542000E-01	92
163	2.372399E 00	1.525419E 01	2.458000E-01	93
164	1.855399E 00	1.550000E 01	2.500000E-01	94
165	1.445000E 00	1.574999E 01	2.500000E-01	95
166	1.125400E 00	1.599996E 01	2.500000E-01	96
167	8.764200E-01	1.625000E 01	2.500000E-01	97
168	6.825600E-01	1.650000E 01	2.500000E-01	98
169	5.315800E-01	1.674998E 01	2.500000E-01	99
170	4.139900E-01	1.700000E 01	1.495000E 00	100
171	9.999996E-02	1.842067E 01	4.834999E 00	100
172	1.000000E-05	2.763101E 01		

BROAD GROUP	UPPER ENERGY	UPPER LETHARGY	GROUP FLUX
1	1.733299E 07	-5.500267E-01	1.112600E 02
2	1.349900E 07	-3.000305E-01	7.279988E 00
3	1.221400E 07	-1.999978E-01	9.996998E-02
4	1.105200E 07	-1.000263E-01	1.000299E-01
5	1.000000E 07	0.0	1.325499E-01
6	9.048400E 06	9.999681E-02	2.172799E-01
7	8.187300E 06	2.000003E-01	3.349999E-01
8	7.408200E 06	2.999975E-01	4.890000E-01
9	6.703200E 06	3.999996E-01	6.785999E-01
10	6.065300E 06	5.000008E-01	9.001999E-01
11	5.488100E 06	6.000026E-01	1.146000E 00
12	4.965900E 06	6.999902E-01	1.406099E 00
13	4.493300E 06	7.999976E-01	1.667999E 00
14	4.065700E 06	8.999990E-01	1.919000E 00
15	3.678800E 06	9.999983E-01	2.148000E 00
16	3.328700E 06	1.100002E 00	2.344999E 00
17	3.011900E 06	1.200013E 00	2.504999E 00
18	2.725300E 06	1.300006E 00	2.618999E 00
19	2.466000E 06	1.399987E 00	2.698298E 00
20	2.231300E 06	1.500000E 00	2.711999E 00
21	2.019000E 06	1.599982E 00	2.701999E 00
22	1.826800E 06	1.700019E 00	2.646998E 00
23	1.653000E 06	1.799993E 00	2.562999E 00
24	1.495700E 06	1.899990E 00	2.454999E 00
25	1.353400E 06	1.999965E 00	2.326999E 00
26	1.224600E 06	2.099971E 00	2.188000E 00
27	1.108000E 06	2.200028E 00	2.037000E 00
28	1.002600E 06	2.299988E 00	1.884399E 00
29	9.071800E 05	2.400000E 00	1.730200E 00
30	8.208500E 05	2.500000E 00	1.010100E-01
31	7.427400E 05	2.599994E 00	9.999996E-02
32	6.720600E 05	2.699992E 00	9.999996E-02
33	6.081000E 05	2.800000E 00	9.999996E-02
34	5.502300E 05	2.900003E 00	9.999996E-02
35	4.978700E 05	3.000001E 00	9.999996E-02
36	4.504900E 05	3.100004E 00	9.999996E-02
37	4.076200E 05	3.200005E 00	9.999996E-02
38	3.688300E 05	3.300004E 00	9.999996E-02
39	3.337300E 05	3.400008E 00	9.999996E-02
40	3.019700E 05	3.500012E 00	9.997195E-02
41	2.732400E 05	3.599990E 00	9.998995E-02
42	2.472400E 05	3.699981E 00	1.000100E-01
43	2.237100E 05	3.799990E 00	1.000100E-01

(MALOCS OUTPUT CONTINUED ON NEXT PAGE)

MALOCS OUTPUT (CONTINUED)

44	2.024200E 05	3.899995E 00	9.998000E-02
45	1.831600E 05	3.999980E 00	9.999996E-02
46	1.657300E 05	4.099980E 00	9.998995E-02
47	1.499600E 05	4.199971E 00	9.998995E-02
48	1.356900E 05	4.299967E 00	1.000600E-01
49	1.227700E 05	4.400027E 00	9.996998E-02
50	1.110900E 05	4.499999E 00	2.500000E-01
51	8.651700E 04	4.749999E 00	2.499999E-01
52	6.737900E 04	5.000007E 00	2.499999E-01
53	5.247500E 04	5.250004E 00	2.500000E-01
54	4.086800E 04	5.499993E 00	2.499999E-01
55	3.182800E 04	5.749994E 00	2.499399E-01
56	2.478800E 04	5.999981E 00	2.500099E-01
57	1.930500E 04	6.249976E 00	2.500000E-01
58	1.503400E 04	6.500026E 00	2.500000E-01
59	1.170900E 04	6.749983E 00	2.500000E-01
60	9.118797E 03	7.000003E 00	2.500000E-01
61	7.101699E 03	7.250007E 00	2.500000E-01
62	5.530797E 03	7.500009E 00	2.500000E-01
63	4.307393E 03	7.750007E 00	2.499999E-01
64	3.354600E 03	8.000008E 00	2.499699E-01
65	2.612600E 03	8.249994E 00	2.499899E-01
66	2.034700E 03	8.499991E 00	2.500000E-01
67	1.584600E 03	8.750009E 00	2.500000E-01
68	1.234100E 03	8.999999E 00	2.500000E-01
69	9.611199E 02	9.249996E 00	2.500000E-01
70	7.485198E 02	9.499998E 00	2.500000E-01
71	5.829500E 02	9.749994E 00	2.500000E-01
72	4.540000E 02	9.999999E 00	2.500000E-01
73	3.535798E 02	1.024999E 01	2.500000E-01
74	2.753599E 02	1.050002E 01	2.500000E-01
75	2.144500E 02	1.075002E 01	2.500000E-01
76	1.670200E 02	1.099998E 01	2.500000E-01
77	1.300700E 02	1.125002E 01	2.500000E-01
78	1.013000E 02	1.150001E 01	2.500000E-01
79	7.889299E 01	1.175000E 01	2.500000E-01
80	6.144199E 01	1.200000E 01	2.500000E-01
81	4.785100E 01	1.225000E 01	2.500000E-01
82	3.726700E 01	1.249999E 01	2.438000E-01
83	2.920299E 01	1.274382E 01	2.562000E-01
84	2.260300E 01	1.300001E 01	2.500000E-01
85	1.760300E 01	1.325003E 01	2.499000E-01
86	1.371000E 01	1.349997E 01	2.500000E-01
87	1.067700E 01	1.375000E 01	2.500000E-01
88	8.315300E 00	1.400000E 01	2.500000E-01
89	6.476000E 00	1.424999E 01	2.500000E-01
90	5.043500E 00	1.450000E 01	2.500000E-01
91	3.927899E 00	1.474999E 01	2.500000E-01
92	3.058999E 00	1.500001E 01	2.542000E-01
93	2.372399E 00	1.525419E 01	2.458000E-01
94	1.855399E 00	1.550000E 01	2.500000E-01
95	1.445000E 00	1.574999E 01	2.500000E-01
96	1.125400E 00	1.599996E 01	2.500000E-01
97	8.764200E-01	1.625000E 01	2.500000E-01
98	6.825600E-01	1.650000E 01	2.500000E-01
99	5.315800E-01	1.674998E 01	2.500000E-01
100	4.139900E-01	1.700000E 01	6.329999E 00
101	1.000000E-05	2.763101E 01	

GAMMA GROUP DEFINITIONS AND WEIGHTING FLUXES

FINE GROUP	UPPER ENERGY	UPPER LETHARGY	GROUP FLUX	BROAD GROUP

(MALOCS OUTPUT CONTINUED ON NEXT PAGE)

GAMMA-RAY GROUP COLLAPSE

1	1.400000E 07	-3.364723E-01	2.000000E 00	1
2	1.200000E 07	-1.823216E-01	2.000000E 00	2
3	1.000000E 07	0.0	2.000000E 00	3
4	8.000000E 06	2.231436E-01	5.000000E-01	4
5	7.500000E 06	2.876818E-01	5.000000E-01	5
6	7.000000E 06	3.566744E-01	5.000000E-01	6
7	6.500000E 06	4.307824E-01	5.000000E-01	7
8	6.000000E 06	5.108252E-01	5.000000E-01	8
9	5.500000E 06	5.978366E-01	5.000000E-01	9
10	5.000000E 06	6.931472E-01	5.000000E-01	10
11	4.500000E 06	7.985074E-01	5.000000E-01	11
12	4.000000E 06	9.162908E-01	5.000000E-01	12
13	3.500000E 06	1.049822E 00	5.000000E-01	13
14	3.000000E 06	1.203972E 00	5.000000E-01	14
15	2.500000E 06	1.386294E 00	5.000000E-01	15
16	2.000000E 06	1.609438E 00	3.400000E-01	16
17	1.660000E 06	1.795767E 00	1.600000E-01	16
18	1.500000E 06	1.897120E 00	1.700000E-01	17
19	1.330000E 06	2.017406E 00	3.300000E-01	17
20	1.000000E 06	2.302585E 00	2.000000E-01	18
21	8.000000E 05	2.525728E 00	9.999996E-02	18
22	7.000000E 05	2.659260E 00	9.999996E-02	18
23	6.000000E 05	2.813410E 00	8.800000E-02	18
24	5.120000E 05	2.972015E 00	2.000000E-03	18
25	5.100000E 05	2.975929E 00	6.000000E-02	18
26	4.500000E 05	3.101092E 00	5.000000E-02	18
27	4.000000E 05	3.218876E 00	9.999996E-02	19
28	3.000000E 05	3.506557E 00	9.999996E-02	19
29	2.000000E 05	3.912023E 00	5.000000E-02	20
30	1.500000E 05	4.199705E 00	5.000000E-02	20
31	1.000000E 05	4.605170E 00	2.500000E-02	21
32	7.500000E 04	4.892852E 00	1.500000E-02	21
33	6.000000E 04	5.115995E 00	1.500000E-02	21
34	4.500000E 04	5.403678E 00	1.500000E-02	21
35	3.000000E 04	5.809143E 00	9.999998E-03	21
36	2.000000E 04	6.214608E 00	9.999998E-03	21
37	1.000000E 04	6.907756E 00		

BROAD GROUP	UPPER ENERGY	UPPER LETHARGY	GROUP FLUX
1	1.400000E 07	-3.364723E-01	2.000000E 00
2	1.200000E 07	-1.823216E-01	2.000000E 00
3	1.000000E 07	0.0	2.000000E 00
4	8.000000E 06	2.231436E-01	5.000000E-01
5	7.500000E 06	2.876818E-01	5.000000E-01
6	7.000000E 06	3.566744E-01	5.000000E-01
7	6.500000E 06	4.307824E-01	5.000000E-01
8	6.000000E 06	5.108252E-01	5.000000E-01
9	5.500000E 06	5.978366E-01	5.000000E-01
10	5.000000E 06	6.931472E-01	5.000000E-01
11	4.500000E 06	7.985074E-01	5.000000E-01
12	4.000000E 06	9.162908E-01	5.000000E-01
13	3.500000E 06	1.049822E 00	5.000000E-01
14	3.000000E 06	1.203972E 00	5.000000E-01
15	2.500000E 06	1.386294E 00	5.000000E-01
16	2.000000E 06	1.609438E 00	4.999999E-01
17	1.500000E 06	1.897120E 00	4.999999E-01
18	1.000000E 06	2.302585E 00	5.999998E-01
19	4.000000E 05	3.218876E 00	1.999999E-01
20	2.000000E 05	3.912023E 00	9.999996E-02
21	1.000000E 05	4.605170E 00	8.999991E-02
22	1.000000E 04	6.907756E 00	

C-12 CASE FOR COMBINED CTR & CRBR PROCESSING 1274
NB-93 CASE FOR COMBINED CTR & CRBR PROCESSING 1189
LI-6 CASE FOR COMBINED CTR & CRBR PROCESSING 1271
LI-7 CASE FOR COMBINED CTR & CRBR PROCESSING 1272
WELL I'LL BE DAMNED---YOU HAVE COLLAPSED A WHOLE MASTER INTERFACE ← WORDS OF ENCOURAGEMENT FROM NMG

TAPE ID 12963 NUMBER OF NUCLIDES 4
NUMBER OF NEUTRON GROUPS 100 NUMBER OF GAMMA GROUPS 21
FIRST THERMAL GROUP 100

TABLE OF CONTENTS

C-12 CASE FOR COMBINED CTR & CRBR PROCESSING	ID	1274
NB-93 CASE FOR COMBINED CTR & CRBR PROCESSING	ID	1189
LI-6 CASE FOR COMBINED CTR & CRBR PROCESSING	ID	1271
LI-7 CASE FOR COMBINED CTR & CRBR PROCESSING	ID	1272

CONTENTS OF COLLAPSED 100N,21G) AMPX MASTER

TAPE COPY USED 469 I/O'S, AND TOOK 0.61 SECONDS

IHC002I STOP 0

(END OF MALOCS OUTPUT)

DLC-41: JCL AND INPUT DATA FOR JOB3 OF THE CTR STANDARD BLANKET SAMPLE PROBLEM (1 OF 2)

```
//IJB5SAMP JOB (15334),'J B WRIGHT 6025'
//*CLASS CPU91=05M,IO=25,REGION=420K,SPECIAL=TAPE
//NITAWL EXEC FORTHCLG,PARM.FORT='NOSOURCE,NOMAP',
// PARM.LKED='LET,OVLY',REGION.GO=410K
//SYSPRINT DD DUMMY
//FORT.SYSIN DD UNIT=TAPE9,DISP=(OLD,PASS),
// VOL=SER=RR0001,LABEL=(16,NL),
// DCB=(RECFM=FB,LRECL=80,BLKSIZE=3200)
//LKED.SLFTN DD UNIT=3330,VOL=SER=NE3330,DSN=RWR.AMPX.SLFTN.R8477,
// DISP=SHR,DCB=(RECFM=FB,LRECL=80,BLKSIZE=3200)
//LKED.SLASM DD UNIT=3330,VOL=SER=NE3330,DSN=RWR.AMPX.SLASM.R8477,
// DISP=SHR,DCB=(RECFM=FB,LRECL=80,BLKSIZE=3200)
//LKED.SYSIN DD *
      ENTRY MAIN
 INCLUDE SLASM
 INCLUDE SLFTN
   OVERLAY ONE
    INSERT FIDAS,FFREAD,ISRCH,FHIER,LETTER,MESAGE
   OVERLAY ONE
    INSERT RECTRY,COPY,JGET
   OVERLAY ONE
    INSERT TAPERD,XTITLE,WOT
   OVERLAY TWO
    INSERT ANIS,SNST,A1DX,CST,FFPUN,FLTFX,WRTP
   OVERLAY TWO
    INSERT MSTPRD
   OVERLAY THREE
    INSERT DERT,BART,SUMS,PICKMT,FOLD,104,SUMX
   OVERLAY THREE
    INSERT MIXM,JLL1,CMPS,MWLIST,PRT1D,CRRCT,TERP1D,RNORM
   OVERLAY THREE
    INSERT RSNANC
   OVERLAY FOUR
    INSERT GRID,RESOL,NEWSLB,NEWCYL,SAMPS,SEMPS,SOMPS,VOGAM,TRAPZ
   OVERLAY FOUR
    INSERT UNRES,GINT,FJ,DLAG,INTER,SIMPS
//GO.FT06F001 DD SYSOUT=A,DCB=(RECFM=FBA,LRECL=133,BLKSIZE=3458)
//GO.FT03F001 DD UNIT=TAPE9,DISP=(NEW,KEEP),
// VOL=SER=X5474,
// LABEL=(1,NL),
// DCB=(RECFM=VBS,LRECL=X,BLKSIZE=3520)
//GO.FT04F001 DD UNIT=SYSDA,
// DCB=(RECFM=VBS,LRECL=X,BLKSIZE=3520,BUFL=4000),
//   SPACE=(3520,(2000,50)),DSN=&&NITAW,DISP=(NEW,PASS)
//GO.FT09F001 DD UNIT=SYSDA,SPACE=(3520,(900,100)),
// DCB=(RECFM=VBS,LRECL=X,BLKSIZE=3520,BUFL=4096)
//GO.FT18F001 DD UNIT=SYSDA,SPACE=(TRK,(900,50)),
// DCB=(RECFM=VBS,LRECL=X,BLKSIZE=3520,BUFL=4096)
//GO.FT19F001 DD UNIT=SYSDA,SPACE=(TRK,(900,50)),
// DCB=(RECFM=VBS,LRECL=X,BLKSIZE=3520,BUFL=4096)
//GO.FT22F001 DD UNIT=TAPE9,DISP=(OLD,PASS),
// VOL=SER=X17982,
// LABEL=(1,NL),
// DCB=(RECFM=VBS,LRECL=X,BLKSIZE=3520)
//GO.FT05F001 DD *
0$$ 22 A9 3 1$$ 2 4 A5 2 5 6 0 126 0 -1 E F
2$$ 1274 1189 1271 1272
5$$ 91 107 T
```

NITAWL (PRODUCE AN AMPX WORKING LIBRARY AND AN ANISN BINARY LIBRARY)

NITAWL SOURCE PROGRAM

NITAWL OVERLAY CARDS

100N,21G ANISN LIBRARY (P_3)

100N,21G AMPX WORKING LIBRARY

100N,21G COUPLED AMPX MASTER FROM MALOCS

NOTE EXTRA CROSS SECTIONS SELECTED

DLC-41: JCL AND INPUT DATA FOR JOB3 OF THE CTR STANDARD BLANKET SAMPLE PROBLEM (2 OF 2)

XSDRNPM (CALCULATE THE CTR STANDARD BLANKET MODEL AS A FIXED SOURCE PROBLEM)

```
//XSDRN EXEC FORTHCLG,PARM.FORT='NOSOURCE,NOMAP,IOD',
// PARM.LKED='LET,OVLY',REGION.GO=420K
//SYSPRINT DD DUMMY
//FORT.SYSIN DD UNIT=TAPE9,DISP=(OLD,PASS),
// VOL=SER=RR0001,LABEL=(18,NL),
// DCB=(RECFM=FB,LRECL=80,BLKSIZE=3200)
//LKED.SLFTN DD UNIT=3330,VOL=SER=NE3330,DSN=RWR.AMPX.SLFTN.R8477,
// DISP=SHR,DCB=(RECFM=FB,LRECL=80,BLKSIZE=3200)
//LKED.SLASM DD UNIT=3330,VOL=SER=NE3330,DSN=RWR.AMPX.SLASM.R8477,
// DISP=SHR,DCB=(RECFM=FB,LRECL=80,BLKSIZE=3200)
//LKED.SYSIN DD *
      ENTRY MAIN
 INCLUDE SLASM
 INCLUDE SLFTN
    OVERLAY ONE
     INSERT MESAGE,FHLPR,LETTER
    OVERLAY ONE
     INSERT MIX,CMPS,JLL1,MIXEM,NCHI
    OVERLAY ONE
     INSERT ELSNT,STORXS,PNCNST,TAPE,FIDAS,FFREAD
     INSERT DOQ,ROOTS,FIND,Q,QUAIWT
    OVERLAY ONE
     INSERT XSDRNG
    OVERLAY TWO
     INSERT GEOMF,FIXSRC,REPLCE,FISSRC,CONVRG
    OVERLAY TWO
     INSERT SCATSC,SCALFC,UPSCAL
    OVERLAY THREE
     INSERT SNEL
    OVERLAY THREE
     INSERT DT
    OVERLAY THREE
     INSERT CELL
    OVERLAY ONE
     INSERT OUTPUT,FFPUN,FLTFX,SECUT,INVERT
     INSERT ANIS,A1DX,SNST
     INSERT INFACE,CCLAPS,HOLLER,TR1D,TRSCT
    OVERLAY ONE
     INSERT FEWG,WATE,WAIT,BECRD2,WT1D,CFLUX,PHIDIV
     INSERT ERT1D,CURNTS,TRNPRT,FISCAP
    OVERLAY ONE
     INSERT ET,SUMARY,SUMFEW
    OVERLAY ONE
      INSERT EDIT,ACTY,RRATE
//GO.FT06F001 DD SYSOUT=A,DCB=(RECFM=FBA,LRECL=133,BLKSIZE=3458)
//GO.FT04F001 DD UNIT=SYSDA,
// DCB=(RECFM=VBS,LRECL=X,BLKSIZE=3520,BUFL=4000),
//  SPACE=(3520,(2000,50)),DSN=&&NITAW,DISP=(OLD,DELETE)
//GO.FT08F001 DD UNIT=SYSDA,SPACE=(3520,(900,20)),
// DCB=(RECFM=VBS,LRECL=X,BLKSIZE=3520,BUFL=4096)
//GO.FT09F001 DD UNIT=SYSDA,SPACE=(3520,(900,20)),
// DCB=(RECFM=VBS,LRECL=X,BLKSIZE=3520,BUFL=4096)
//GO.FT10F001 DD UNIT=SYSDA,SPACE=(3520,(900,20)),
// DCB=(RECFM=VBS,LRECL=X,BLKSIZE=3520,BUFL=4096)
//GO.FT16F001 DD UNIT=SYSDA,SPACE=(TRK,(900,50)),
// DCB=(RECFM=VBS,LRECL=X,BLKSIZE=3520,BUFL=4096)
//GO.FT18F001 DD UNIT=SYSDA,SPACE=(TRK,(900,50)),
// DCB=(RECFM=VBS,LRECL=X,BLKSIZE=3520,BUFL=4096)


//GO.FT19F001 DD UNIT=SYSDA,SPACE=(TRK,(900,50)),
// DCB=(RECFM=VBS,LRECL=X,BLKSIZE=3520,BUFL=4096)
//GO.FT05F001 DD *
CTR STANDARD BLANKET SAMPLE PROBLEM
1$$2 10 62 1 0 3 5 4 3 0 25 1 0 0 3 3$$ 0 1 A8 1 2 1 ET
13$$ 1 3R2 3  14$$ 1189 1189 1271 1272 1274
15** 0.05556 0.003334 0.003234 0.04038 0.0804 T
30$$ 1 F0
31** 1. F 0. T
33** F0 T
35** 0 150 21200 51200.5 21203.5 291204.0 141264.0 21294.0 300.0
36$$ 1 2 3R3 6R4 3R5 10R6 10R7 10R8 45R9 3R10
38** 2R0 F1 39$$3R1 2 1 3R2 3 2 40$$F3
49$$ 1271 1272 50$$ 107  91          T
```

XSDRNPM SOURCE PROGRAM

XSDRNPM OVERLAY CARDS

100N,21G COUPLED AMPX WORKING LIBRARY FROM NITAWL

NUMBER DENSITIES

ACTIVITY CALCULATION FOR TRITIUM PRODUCTION

DLC-41: OUTPUT FROM JOB3 OF THE CTR STANDARD BLANKET SAMPLE PROBLEM (1 OF 10)

NITAWL (PRODUCE AN AMPX WORKING LIBRARY AND AN ANISN BINARY LIBRARY)

```
NN          NN   IIIIIIIIIIII   TTTTTTTTTTTT     AAAAAAAAA     WW          WW   LL
NNN         NN   IIIIIIIIIIII   TTTTTTTTTTTT    AAAAAAAAAAA    WW          WW   LL
NNNN        NN        II             TT         AA         AA   WW          WW   LL
NN NN       NN        II             TT         AA         AA   WW          WW   LL
NN  NN      NN        II             TT         AA         AA   WW          WW   LL
NN   NN     NN        II             TT         AAAAAAAAAAAAA   WW    W     WW   LL
NN    NN    NN        II             TT         AAAAAAAAAAAAA   WW   WWW    WW   LL
NN     NN   NN        II             TT         AA         AA   WW  WW WW  WW   LL
NN      NN  NN        II             TT         AA         AA   WW WW   WW WW   LL
NN       NNNN         II             TT         AA         AA   WWWW     WWWW   LL
NN        NNN   IIIIIIIIIIII         TT         AA         AA   WWW       WWW   LLLLLLLLLLLL
NN         NN   IIIIIIIIIIII         TT         AA         AA   WW         WW   LLLLLLLLLLLL

IIIIIIIIIIII            JJ   BBBBBBBBBBBB   5555555555555    SSSSSSSSSSS      AAAAAAAAA     MM         MM   PPPPPPPPPPPP
IIIIIIIIIIII            JJ   BBBBBBBBBBBBB  5555555555555   SSSSSSSSSSSSS    AAAAAAAAAAA    MMM        MMM   PPPPPPPPPPPPP
    II                  JJ   BB         BB  55             SS         SS   AA         AA   MMMM      MMMM   PP          PP
    II                  JJ   BB         BB  55             SS              AA         AA   MM MM    MM MM   PP          PP
    II                  JJ   BB         BB  55             SS              AA         AA   MM  MM  MM  MM   PP          PP
    II                  JJ   BBBBBBBBBBBBB  555555555555   SSSSSSSSSSSS    AAAAAAAAAAAAA  MM   MMM   MM   PPPPPPPPPPPPP
    II                  JJ   BBBBBBBBBBBBB  5555555555555   SSSSSSSSSSSS   AAAAAAAAAAAAA  MM    M    MM   PPPPPPPPPPPPP
    II                  JJ   BB         BB             55             SS   AA         AA   MM         MM   PP
    II                  JJ   BB         BB             55             SS   AA         AA   MM         MM   PP
    II            JJ    JJ   BB         BB  55         55   SS         SS   AA         AA   MM         MM   PP
IIIIIIIIIIII  JJJJJJJJJJJJJ  BBBBBBBBBBBBB  5555555555555   SSSSSSSSSSSS   AA         AA   MM         MM   PP
IIIIIIIIIIII   JJJJJJJJJJJ   BBBBBBBBBBBB    55555555555    SSSSSSSSSSS   AA         AA   MM         MM   PP

    11          0000000                      22222222222   555555555555                   7777777777777   7777777777777
   111         000000000                    2222222222222   555555555555                   7777777777777   7777777777777
  1111        00       00                   22          22   55                           77         77   77         77
    11       00         00                               22   55                                   77             77
    11       00         00                               22   55                                  77               77
    11       00         00                              22    555555555555                       77               77
    11       00         00                             22     555555555555                      77               77
    11       00         00                           22                 55                     77               77
    11       00         00                         22                   55                     77               77
    11        00       00                       22   55          55                            77               77
11111111       000000000                      2222222222222   555555555555                   77               77
11111111        0000000                       2222222222222    55555555555                   77               77

    11         33333333333                    5555555555555          44                        0000000       5555555555555
   111        3333333333333                   5555555555555         444                      000000000      5555555555555
  1111        33          33                  55                   4444                    00        00      55
    11                    33                  55                 44  44                  00          00      55
    11                    33                  55                44   44                 00          00      55
    11                333                     555555555555       44    44               00          00      555555555555
    11                333          .....      5555555555555    44     44               00          00      5555555555555
    11                  33         .....                  55  444444444444   .....     00          00                 55
    11                  33         .....                  55  444444444444   .....     00          00                 55
    11        33        33         .....      55          55          44   .....      00        00      55         55
11111111  333333333333                         5555555555555          44                 000000000      5555555555555
11111111   33333333333                          55555555555          44                  0000000        55555555555
```

(NITAWL OUTPUT CONTINUED ON NEXT PAGE)

NITAWL OUTPUT (CONTINUED)

```
    0$ ARRAY       9 ENTRIES READ
    1$ ARRAY      12 ENTRIES READ
    0T
 MSCM      NUMBER OF EXTRA CROSS SECTIONS                          2
 MMT       NUMBER OF NUCLIDES FROM MASTER LIBRARY                  4
 MWT       NUMBER OF NUCLIDES FROM X-SECT LIBRARY (LOG 2)          0
 MXT       NUMBER OF NUCLIDES FROM X-SECT LIBRARY (LOG 3)          0
 MCB       ANISN/DOT/MORSE OUTPUT TRIGGER                          2
 MXX       TOTAL CROSS SECTION POSITION                            5
 MS        WITHIN-GROUP SCATTERING CROSS SECTION POSITION          6
 IRES      NUMBER OF RESONANCE CALCULATIONS                        0
 IQM       TABLE LENGTH FOR CROSS SECTIONS                       126
 IPM       IS AN OLD ANISN LIBRARY MOUNTED ? (0/1 NO/YES)          0
 IPP       OUTPUT OPTION TRIGGER                                  -1
 IFG       PRINT CONTROL - ANISN OUTPUT                            0
THE STORAGE ALLOCATED FOR THIS CASE IS  51712 WORDS
    2$ ARRAY       4 ENTRIES READ
    5$ ARRAY       2 ENTRIES READ
    0T
 GENERAL INFORMATION CONCERNING CROSS SECTION LIBRARY
   TAPE IDENTIFICATION NUMBER                12963
   NUMBER OF NUCLIDES ON TAPE                    4
   NUMBER OF NEUTRON ENERGY GROUPS             100
   FIRST THERMAL NEUTRON ENERGY GROUP          100
   NUMBER OF GAMMA ENERGY GROUPS                21
 XSDRN TAPE  12963


 NUCLIDES FROM XSDRN TAPE
    1    C-12 CASE FOR COMBINED CTR & CRBR PROCESSING                    1274
    2    NB-93 CASE FOR COMBINED CTR & CRBR PROCESSING                   1189   NUCLIDES ON THE (100N,21G)
    3    LI-6  CASE FOR COMBINED CTR & CRBR PROCESSING                   1271
    4    LI-7  CASE FOR COMBINED CTR & CRBR PROCESSING                   1272   AMPX MASTER
C-12 CASE FOR COMBINED CTR & CRBR PROCESSING                      1274
NB-93 CASE FOR COMBINED CTR & CRBR PROCESSING                     1189
LI-6  CASE FOR COMBINED CTR & CRBR PROCESSING                     1271
LI-7  CASE FOR COMBINED CTR & CRBR PROCESSING                     1272
AN ANISN LIBRARY WILL BE MADE ON TAPE 20
FOR 100 NEUTRON GROUPS AND  21 GAMMA GROUPS
    IHT=  5
    IHS=  6      WHICH ALLOWS 120 DOWNSCATTERS
    ITL=126                    0 UPSCATTERS
   2 EXTRA CROSS SECTIONS ARE INCLUDED ABOVE      THE NORMAL 3 (ABS,NU-SIGF,SIGT) WHICH ARE---
                  POSITION      ENDF/B MT-NUMBER
                      1                 91
                      2                107      <------------------------------------ EXTRA CROSS SECTIONS
THE LIBRARY CONTENTS ARE
  NOG   ITL ICT    ID                TITLE
  121   126   0     1 P0 DATA FOR C-12 CASE FOR COMBINED CTR & CRBR PROCESSING                    XSDRN ID      1274
  121   126   0     2 P1 DATA FOR C-12 CASE FOR COMBINED CTR & CRBR PROCESSING                    XSDRN ID      1274
  121   126   0     3 P2 DATA FOR C-12 CASE FOR COMBINED CTR & CRBR PROCESSING                    XSDRN ID      1274
  121   126   0     4 P3 DATA FOR C-12 CASE FOR COMBINED CTR & CRBR PROCESSING                    XSDRN ID      1274
  121   126   0     5 P4 DATA FOR C-12 CASE FOR COMBINED CTR & CRBR PROCESSING                    XSDRN ID      1274
  121   126   0     6 P5 DATA FOR C-12 CASE FOR COMBINED CTR & CRBR PROCESSING                    XSDRN ID      1274
  121   126   0     7 P0 DATA FOR NB-93 CASE FOR COMBINED CTR & CRBR PROCESSING                   XSDRN ID      1189
  121   126   0     8 P1 DATA FOR NB-93 CASE FOR COMBINED CTR & CRBR PROCESSING                   XSDRN ID      1189
  121   126   0     9 P2 DATA FOR NB-93 CASE FOR COMBINED CTR & CRBR PROCESSING                   XSDRN ID      1189
```

(NITAWL OUTPUT CONTINUED ON NEXT PAGE)

NITAWL OUTPUT (CONTINUED)

```
  121   126    0     10 P3 DATA FOR NB-93 CASE FOR COMBINED CTR & CRBR PROCESSING                    XSDRN ID        1189
  121   126    0     11 P4 DATA FOR NB-93 CASE FOR COMBINED CTR & CRBR PROCESSING                    XSDRN ID        1189
  121   126    0     12 P5 DATA FOR NB-93 CASE FOR COMBINED CTR & CRBR PROCESSING                    XSDRN ID        1189
  121   126    0     13 P0 DATA FOR LI-6  CASE FOR COMBINED CTR & CRBR PROCESSING                    XSDRN ID        1271
  121   126    0     14 P1 DATA FOR LI-6  CASE FOR COMBINED CTR & CRBR PROCESSING                    XSDRN ID        1271
  121   126    0     15 P2 DATA FOR LI-6  CASE FOR COMBINED CTR & CRBR PROCESSING                    XSDRN ID        1271
  121   126    0     16 P3 DATA FOR LI-6  CASE FOR COMBINED CTR & CRBR PROCESSING                    XSDRN ID        1271
  121   126    0     17 P4 DATA FOR LI-6  CASE FOR COMBINED CTR & CRBR PROCESSING                    XSDRN ID        1271
  121   126    0     18 P5 DATA FOR LI-6  CASE FOR COMBINED CTR & CRBR PROCESSING                    XSDRN ID        1271
  121   126    0     19 P0 DATA FOR LI-7  CASE FOR COMBINED CTR & CRBR PROCESSING                    XSDRN ID        1272
  121   126    0     20 P1 DATA FOR LI-7  CASE FOR COMBINED CTR & CRBR PROCESSING                    XSDRN ID        1272
  121   126    0     21 P2 DATA FOR LI-7  CASE FOR COMBINED CTR & CRBR PROCESSING                    XSDRN ID        1272
  121   126    0     22 P3 DATA FOR LI-7  CASE FOR COMBINED CTR & CRBR PROCESSING                    XSDRN ID        1272
  121   126    0     23 P4 DATA FOR LI-7  CASE FOR COMBINED CTR & CRBR PROCESSING                    XSDRN ID        1272
  121   126    0     24 P5 DATA FOR LI-7  CASE FOR COMBINED CTR & CRBR PROCESSING                    XSDRN ID        1272
AN ANISN BINARY LIBRARY HAS BEEN MADE ON LOGICAL  3
THE LIBRARY CONTENTS ARE
  NOG    ITL  ICT     ID                TITLE
  121   126    0      1        P0 C-12 CASE FOR COMBINED CTR & CRBR PROCESSING
  121   126    0      2        P1 C-12 CASE FOR COMBINED CTR & CRBR PROCESSING
  121   126    0      3        P2 C-12 CASE FOR COMBINED CTR & CRBR PROCESSING
  121   126    0      4        P3 C-12 CASE FOR COMBINED CTR & CRBR PROCESSING
  121   126    0      5        P4 C-12 CASE FOR COMBINED CTR & CRBR PROCESSING
  121   126    0      6        P5 C-12 CASE FOR COMBINED CTR & CRBR PROCESSING
  121   126    0      7        P0 NB-93 CASE FOR COMBINED CTR & CRBR PROCESSIN
  121   126    0      8        P1 NB-93 CASE FOR COMBINED CTR & CRBR PROCESSIN
  121   126    0      9        P2 NB-93 CASE FOR COMBINED CTR & CRBR PROCESSIN
  121   126    0     10        P3 NB-93 CASE FOR COMBINED CTR & CRBR PROCESSIN
  121   126    0     11        P4 NB-93 CASE FOR COMBINED CTR & CRBR PROCESSIN
  121   126    0     12        P5 NB-93 CASE FOR COMBINED CTR & CRBR PROCESSIN
  121   126    0     13        P0 LI-6  CASE FOR COMBINED CTR & CRBR PROCESSIN
  121   126    0     14        P1 LI-6  CASE FOR COMBINED CTR & CRBR PROCESSIN
  121   126    0     15        P2 LI-6  CASE FOR COMBINED CTR & CRBR PROCESSIN
  121   126    0     16        P3 LI-6  CASE FOR COMBINED CTR & CRBR PROCESSIN
  121   126    0     17        P4 LI-6  CASE FOR COMBINED CTR & CRBR PROCESSIN
  121   126    0     18        P5 LI-6  CASE FOR COMBINED CTR & CRBR PROCESSIN
  121   126    0     19        P0 LI-7  CASE FOR COMBINED CTR & CRBR PROCESSIN
  121   126    0     20        P1 LI-7  CASE FOR COMBINED CTR & CRBR PROCESSIN
  121   126    0     21        P2 LI-7  CASE FOR COMBINED CTR & CRBR PROCESSIN
  121   126    0     22        P3 LI-7  CASE FOR COMBINED CTR & CRBR PROCESSIN
  121   126    0     23        P4 LI-7  CASE FOR COMBINED CTR & CRBR PROCESSIN
  121   126    0     24        P5 LI-7  CASE FOR COMBINED CTR & CRBR PROCESSIN
    7     7    7      7          G    G    G    G    G    G    G    G    G    G    G    G
  ELAPSED TIME    0.07 MIN.
     THIS XSDRN WORKING TAPE WAS CREATED
     THE TITLE OF THE PARENT CASE IS AS FOLLOWS

       TAPE ID                          12963          NUMBER OF NUCLIDES                  4
       NUMBER OF NEUTRON GROUPS           100          NUMBER OF GAMMA GROUPS             21
       FIRST THERMAL GROUP                100
                                     TABLE OF CONTENTS
     C-12 CASE FOR COMBINED CTR & CRBR PROCESSING                                  ID     1271
     NB-93 CASE FOR COMBINED CTR & CRBR PROCESSING                                 ID     1189
     LI-6  CASE FOR COMBINED CTR & CRBR PROCESSING                                 ID     1271
     LI-7  CASE FOR COMBINED CTR & CRBR PROCESSING                                 ID     1272
       TAPE COPY USED     437 I/O'S, AND TOOK     0.38 SECONDS
IHC002I STOP      0
```

CONTENTS OF ANISN LIBRARY
(NOTE IT IS P_5)

CONTENTS OF AMPX WORKING LIBRARY

(END OF NITAWL OUTPUT)

DLC-41: OUTPUT FROM JOB3 OF THE CTR STANDARD BLANKET SAMPLE PROBLEM(4 OF 10)

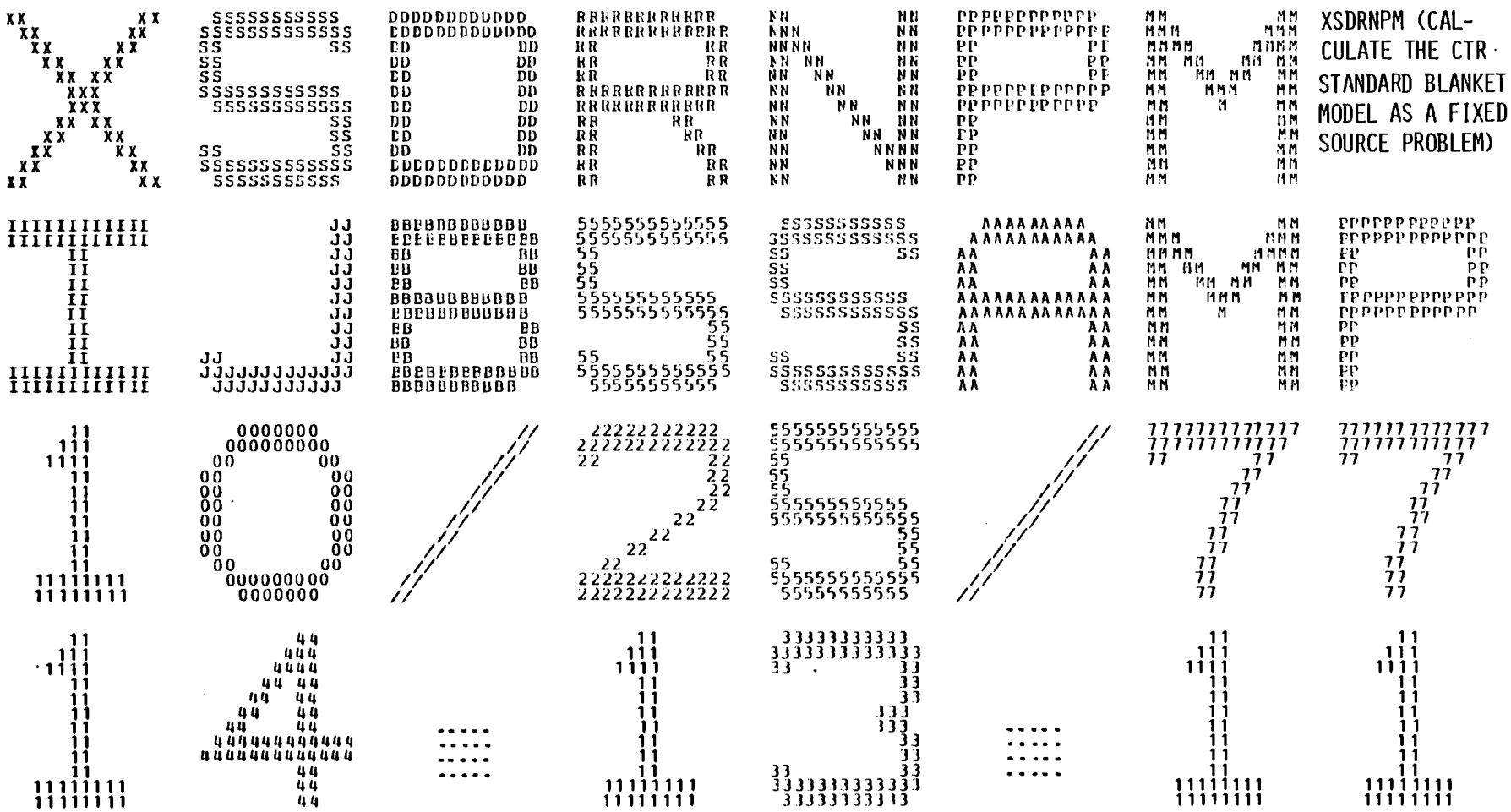

XSDRNPM (CALCULATE THE CTR STANDARD BLANKET MODEL AS A FIXED SOURCE PROBLEM)

(XSDRNPM OUTPUT CONTINUED ON NEXT PAGE)

DLC-41: OUTPUT FROM JOB3 OF THE CTR STANDARD BLANKET SAMPLE PROBLEM (5 OF 10)

XSDRNPM OUTPUT (CONTINUED)

```
                          CTR STANDARD BLANKET SAMPLE PROBLEM
    1$ ARRAY      15 ENTRIES READ
    3$ ARRAY      12 ENTRIES READ
    OT
          THE FOLLOWING DIRECT ACCESS SPACE IS REQUIRED
    LOGICAL UNIT  8 HAS     172 BLOCKS OF LENGTH  880 WORDS
    LOGICAL UNIT  9 HAS     120 BLOCKS OF LENGTH  880 WORDS
    LOGICAL UNIT 10 HAS     484 BLOCKS OF LENGTH  310 WORDS
GENERAL PROBLEM DESCRIPTION DATA BLOCK
                                GENERAL PROBLEM DATA

IGE   1/2/3 = PLANE/CYLINDER/SPHERE        2        ISN  QUADRATURE ORDER                      4
IZM   NUMBER OF ZONES                     10        ISCT ORDER OF SCATTERING                   3
IM    NUMBER OF SPACIAL INTERVALS         62        IEVT 0/1/2/3/4/5/6=Q/K/ALPHA/C/Z/R/H      0  <------ FIXED SOURCE CALCULATION
IBL   0/1/2/3 = VACUUM/REFL/PER/WHITE     1        IIM  INNER ITERATION MAXIMUM              25
IBR   RIGHT BOUNDARY CONDITION            0        ICM  OUTER ITERATION MAXIMUM               1
MXX   NUMBER OF MIXTURES                  3        ICLC -1/0/N--FLAT RES/SN/OPT               0
MS    MIXING TABLE LENGTH                 5        ITH  0/1 = FORWARD/ADJOINT                 0
IGM   NUMBER OF ENERGY GROUPS           121        IFLU 0/1/2/3/4=L-S/L/S/W/L-W               3
NNG   NUMBER OF NEUTRON GROUPS          100        IPRT -2/-1/0/N=MIXTURE XSEC PRINT         -1
NGG   NUMBER OF GAMMA GROUPS             21        ID1  0/1/2/3=NO/ERT ND/PCH N/BOTH          0
IFTG  NUMBER OF FIRST THERMAL GROUP     100        IPBT -1/0/1=NONE/FINE/ALL BAL. PRT         0
                                SPECIAL OPTIONS

IFG   0/1 = NONE/WEIGHTING CALCULATION    0        IPN  DUMMY PARAMETER                       0
IQM   VOLUMETRIC SOURCES (0/N=NO/YES)     1        IDFM 0/1 = NONE/DENSITY FACTORS 38*        1
IPM   BOUNDARY SOURCES (0/N=NO/YES)       0        IAZ  0/N = NONE/N ACTIVITIES BY ZONE       2
IFN   0/1/2 = INPUT 33*/34*/USE LAST      0        IAI  0/1=NONE/ACTIVITIES BY INTERVAL       1
ITMX  MAXIMUM TIME (MINUTES)              0        IFCT 0/1=NO/YES UPSCATTER SCALING          0
IDT1  0/1/2/3=NO/XSECT/SRCE/FLUX--OUT     0        IPVT 0/1/2=NO/K/ALPHA PARAMETRIC SRCH      0
                                FLOATING POINT PARAMETERS

EV    EIGENVALUE GUESS            0.0              PV   IPVT=1/2--K/ALPHA          0.0
EVM   EIGENVALUE MODIFIER         0.0              EPS  OVERALL CONVERGENCE        1.00000E-04
BF    BUCKLING FACTOR=1.420892    1.42089E 00      PTC  POINT CONVERGENCE         1.00000E-04
DY    CYL/PLA HT FOR BUCKLING     0.0              XNF  NORMALIZATION FACTOR       1.00000E 00
DZ    PLANE DEPTH FOR BUCKLING    0.0              EQL  EV CHANGE EPS FOR SEARCH   1.00000E-03
VSC   VOID STREAMING CORRECTION   0.0              XNPM NEW PARAM MOD FOR SEARCH   7.50000E-01
    THIS CASE WILL REQUIRE      15500 LOCATIONS FOR MIXING
    THIS CASE HAS BEEN ALLOCATED  62464 LOCATIONS
                          CTR STANDARD BLANKET SAMPLE PROBLEM
   13$ ARRAY       5 ENTRIES READ
   14$ ARRAY       5 ENTRIES READ
   15* ARRAY       5 ENTRIES READ
    OT
                                DATA BLOCK 2 (MIXING TABLE, ETC.)
     NUCLIDES          CCCC                          MIXING TABLE                                  EXTRA
      ON TAPE     IDENTIFICATION                MIXTURE  COMPONENT      ATOM DENSITY              XSECT ID'S
    1     1274                                     1        1189        5.55600E-02   NB                          MIXING TABLE
    2     1189                                     2        1189        3.33400E-03 }
    3     1271                                     2        1271        3.23400E-03 } NB + LI-6 + LI-7
    4     1272                                     2        1272        4.03800E-02 }
    5                                              3        1274        8.04000E-02   C
MACROSCOPIC 1-D CROSS SECTIONS FOR MIXTURE   1
        GRP.    1       GRP.    2       GRP.    3       GRP.    4       GRP.    5       GRP.    6       GRP.    7       GRP.    8
    1  0.0             0.0             0.0             0.0             0.0             0.0             0.0             0.0
    2  6.76598E-02     6.60274E-02     5.01137E-02     2.74946E-02     7.49940E-03     1.00020E-04     0.0             0.0
    3  0.0             0.0             0.0             0.0             0.0             0.0             0.0             0.0
    4  0.0             0.0             0.0             0.0             0.0             0.0             0.0             0.0
    5  2.77416E-03     2.72279E-03     2.35305E-03     2.04263E-03     1.66819E-03     1.34823E-03     9.78793E-04     6.99922E-04
```

(REMAINING EDIT OF CROSS SECTIONS OMITTED)

(XSDRNPM OUTPUT CONTINUED ON NEXT PAGE)

(XSDRNPM OUTPUT CONTINUED)

```
  4  0.0              0.0              0.0              0.0              0.0              0.0              0.0              0.0
  5  9.30307E-08      1.01006E-07      1.10365E-07      1.21484E-07      1.34895E-07      1.52390E-07      1.75690E-07      2.06218E-07
  6  0.0              0.0              0.0              0.0              0.0              0.0              0.0              0.0
  7  3.58487E-02      3.71014E-02      3.85510E-02      4.02402E-02      4.22237E-02      4.45110E-02      4.72141E-02      5.04944E-02
     GRP. 113         GRP. 114         GRP. 115         GRP. 116         GRP. 117         GRP. 118         GRP. 119         GRP. 120
  1  0.0              0.0              0.0              0.0              0.0              0.0              0.0              0.0
  2  1.72587E-03      1.19981E-03      7.11137E-04      2.86873E-04      1.87941E-05      0.0              0.0              0.0
  3  0.0              0.0              0.0              0.0              0.0              0.0              0.0              0.0
  4  0.0              0.0              0.0              0.0              0.0              0.0              0.0              0.0
  5  2.47704E-07      3.11453E-07      4.16400E-07      6.28570E-07      1.15053E-06      5.92929E-06      5.84926E-05      5.04224E-04
  6  0.0              0.0              0.0              0.0              0.0              0.0              0.0              0.0
  7  5.45868E-02      5.98007E-02      6.67697E-02      7.65581E-02      9.14849E-02      1.22647E-01      1.71791E-01      2.15387E-01
     GRP. 121
  1  0.0
  2  0.0
  3  0.0
  4  0.0
  5  1.43312E-01
  6  0.0
  7  4.12283E-01
 ELAPSED TIME    0.06 MIN.
IDAT1=0 REQUIRES   116490 LOCATIONS. THIS VERSION OF XSDRN ALLOWS A MAXIMUM OF    62464
 CROSS SECTIONS WILL BE STORED EXTERNALLY
   60787 LOCATIONS WILL BE USED
   30$ ARRAY      62 ENTRIES READ
   31* ARRAY     121 ENTRIES READ
    0T
   33* ARRAY    7502 ENTRIES READ
    0T
   35* ARRAY      63 ENTRIES READ
   36$ ARRAY      62 ENTRIES READ
   38* ARRAY      62 ENTRIES READ
   39$ ARRAY      10 ENTRIES READ
   40$ ARRAY      10 ENTRIES READ
   49$ ARRAY       2 ENTRIES READ
   50$ ARRAY       2 ENTRIES READ
    0T
                          CTR STANDARD BLANKET SAMPLE PROBLEM
                          NEUTRON GROUP PARAMETERS
  GP     ENERGY        LETHARGY        MID PT       BROAD GP        CALC                    RIGHT        LEFT
       BOUNDARIES     BOUNDARIES     VELOCITIES     NUMBERS        TYPE                    ALBEDO       ALBEDO
   1  1.73330E 07  -5.50027E-01  5.40948E 09        0              0
   2  1.34990E 07  -3.00031E-01  4.95624E 09        0              0
   3  1.22140E 07  -1.99998E-01  4.71451E 09        0              0
   4  1.10520E 07  -1.00026E-01  4.48459E 09        0              0
   5  1.00000E 07        0       4.26585E 09        0              0
   6  9.04840E 06   9.99968E-02  4.05780E 09        0              0
   7  8.18730E 06   2.00000E-01  3.85990E 09        0              0
   8  7.40820E 06   2.99998E-01  3.67165E 09        0              0
   9  6.70320E 06   4.00000E-01  3.49258E 09        0              0
  10  6.06530E 06   5.00001E-01  3.32224E 09        0              0
  11  5.48810E 06   6.00003E-01  3.16022E 09        0              0
  12  4.96590E 06   6.99990E-01  3.00610E 09        0              0
  13  4.49330E 06   7.99998E-01  2.85948E 09        0              0
  14  4.06570E 06   8.99999E-01  2.72002E 09        0              0
  15  3.67880E 06   9.99998E-01  2.58736E 09        0              0
  16  3.32870E 06   1.10000E 00  2.46117E 09        0              0
  17  3.01190E 06   1.20001E 00  2.34113E 09        0              0
  18  2.72530E 06   1.30001E 00  2.22697E 09        0              0
  19  2.46600E 06   1.39999E 00  2.11836E 09        0              0
```

(REMAINING NEUTRON GROUP PARAMETERS OMITTED)

(XSDRNPM OUTPUT CONTINUED ON NEXT PAGE)

DLC-41: OUTPUT FROM JOB3 OF THE CTR STANDARD BLANKET SAMPLE PROBLEM (7 OF 10)

XSDRNPM OUTPUT (CONTINUED)

GAMMA GROUP PARAMETERS

GP	ENERGY BOUNDARIES	LETHARGY BOUNDARIES	MID PT VELOCITIES	BROAD GP NUMBERS	CALC TYPE	RIGHT ALBEDO	LEFT ALBEDO
1	1.40000E 07	-3.36472E-01	3.00000E 10	0	0		
2	1.20000E 07	-1.82322E-01	3.00000E 10	0	0		
3	1.00000E 07	0	3.00000E 10	0	0		
4	8.00000E 06	2.23144E-01	3.00000E 10	0	0		
5	7.50000E 06	2.87682E-01	3.00000E 10	0	0		
6	7.00000E 06	3.56674E-01	3.00000E 10	0	0		
7	6.50000E 06	4.30782E-01	3.00000E 10	0	0		
8	6.00000E 06	5.10825E-01	3.00000E 10	0	0		
9	5.50000E 06	5.97837E-01	3.00000E 10	0	0		
10	5.00000E 06	6.93147E-01	3.00000E 10	0	0		
11	4.50000E 06	7.98507E-01	3.00000E 10	0	0		
12	4.00000E 06	9.16291E-01	3.00000E 10	0	0		
13	3.50000E 06	1.04982E 00	3.00000E 10	0	0		
14	3.00000E 06	1.20397E 00	3.00000E 10	0	0		
15	2.50000E 06	1.38629E 00	3.00000E 10	0	0		
16	2.00000E 06	1.60944E 00	3.00000E 10	0	0		
17	1.50000E 06	1.89712E 00	3.00000E 10	0	0		
18	1.00000E 06	2.30258E 00	3.00000E 10	0	0		
19	4.00000E 05	3.21888E 00	3.00000E 10	0	0		
20	2.00000E 05	3.91202E 00	3.00000E 10	0	0		
21	1.00000E 05	4.60517E 00	3.00000E 10	0	0		
22	1.00000E 04	6.90776E 00					

NOTE: XSDRNPM IDENTIFIES GAMMA-RAY GROUPS

NOTE: XSDRNPM HAS DEFAULT S_N CONSTANTS

CTR STANDARD BLANKET SAMPLE PROBLEM

	MIXTURE BY ZONE	ORDER P(L) BY ZONE	ACTIVITY TABLE MATL NO.	REACTION	QUADRATURE CONSTANTS WEIGHTS	DIRECTIONS	REFL DIREC	WT X COS
1	1	3	1271	107	0	-5.08374E-01	3	0
2	1	3	1272	91	1.73927E-01	-3.59475E-01	3	-6.25224E-02
3	1	3			1.73927E-01	3.59475E-01	2	6.25225E-02
4	2	3			.0	-9.40432E-01	8	0
5	1	3			1.63036E-01	-8.68845E-01	8	-1.41653E-01
6	2	3			1.63036E-01	-3.59887E-01	7	-5.86746E-02
7	2	3			1.63036E-01	3.59888E-01	6	5.86748E-02
8	2	3			1.63036E-01	8.68846E-01	5	1.41653E-01
9	3	3						
10	2	3						

NOTE: ACTIVITY CALCULATION CALLED FOR BY MT NUMBER

CONSTANTS FOR P(3) SCATTERING

ANGL	SET 1	SET 2	SET 3	SET 4	SET 5
1	-5.08374E-01	6.12333E-01	2.23819E-01	-8.42969E-01	-1.03870E-01
2	-3.59474E-01	6.12333E-01	0.0	-5.96068E-01	7.34476E-02
3	3.59475E-01	6.12333E-01	0.0	5.96069E-01	-7.34471E-02
4	-9.40432E-01	-3.26619E-01	7.65924E-01	2.43065E-01	-6.57540E-01
5	-8.68845E-01	-3.26619E-01	5.41587E-01	2.24562E-01	-2.51625E-01
6	-3.59887E-01	-3.26619E-01	-5.41591E-01	9.30166E-02	6.07487E-01
7	3.59889E-01	-3.26619E-01	-5.41588E-01	-9.30171E-02	-6.07489E-01
8	8.68846E-01	-3.26619E-01	5.41590E-01	-2.24562E-01	2.51610E-01

VOLUMETRIC SOURCE SPECTRA

GRP.	SPEC 1
1	1.41471E-05
2	0.0

GRP. 3 THRU GRP. 121 SAME AS ABOVE

14 MeV SOURCE

(XSDRNPM OUTPUT CONTINUED ON NEXT PAGE)

DLC-41: OUTPUT FROM JOB3 OF THE CTR STANDARD BLANKET SAMPLE PROBLEM (8 OF 10)

XSDRNPM OUTPUT (CONTINUED)

INT	RADII	MID PTS	ZONE NO.	AREAS	VOLUMES	DENS FACT	RADIUS MOD	SPEC(INT)
1	0	7.50000E 01	1	0	7.06858E 04	0	0	1
2	1.50000E 02	1.75000E 02	2	9.42478E 02	5.49779E 04	0	0	0
3	2.00000E 02	2.00083E 02	3	1.25664E 03	2.09500E 02	1.00000E 00	0	0
4	2.00167E 02	2.00250E 02	3	1.25768E 03	2.09688E 02	1.00000E 00	0	0
5	2.00333E 02	2.00417E 02	3	1.25873E 03	2.09906E 02	1.00000E 00	0	0
6	2.00500E 02	2.00750E 02	4	1.25978E 03	6.30688E 02	1.00000E 00	0	0
7	2.01000E 02	2.01250E 02	4	1.26292E 03	6.32250E 02	1.00000E 00	0	0
8	2.01500E 02	2.01750E 02	4	1.26606E 03	6.33813E 02	1.00000E 00	0	0
9	2.02000E 02	2.02250E 02	4	1.26920E 03	6.35344E 02	1.00000E 00	0	0
10	2.02500E 02	2.02750E 02	4	1.27234E 03	6.36969E 02	1.00000E 00	0	0
11	2.03000E 02	2.03250E 02	4	1.27549E 03	6.38531E 02	1.00000E 00		0
12	2.03500E 02	2.03583E 02	5	1.27863E 03	2.13188E 02	1.00000E 00		0
13	2.03667E 02	2.03750E 02	5	1.27968E 03	2.13375E 02	1.00000E 00		0
14	2.03833E 02	2.03917E 02	5	1.28072E 03	2.13531E 02	1.00000E 00		0
15	2.04000E 02	2.05000E 02	6	1.28177E 03	2.57613E 03	1.00000E 00		0
16	2.06000E 02	2.07000E 02	6	1.29434E 03	2.60125E 03	1.00000E 00		0
17	2.08000E 02	2.09000E 02	6	1.30690E 03	2.62638E 03	1.00000E 00		0
18	2.10000E 02	2.11000E 02	6	1.31947E 03	2.65150E 03	1.00000E 00		0
19	2.12000E 02	2.13000E 02	6	1.33204E 03	2.67663E 03	1.00000E 00		0
20	2.14000E 02	2.15000E 02	6	1.34460E 03	2.70175E 03	1.00000E 00		0
21	2.16000E 02	2.17000E 02	6	1.35717E 03	2.72691E 03	1.00000E 00		0
22	2.18000E 02	2.19000E 02	6	1.36973E 03	2.75203E 03	1.00000E 00		0
23	2.20000E 02	2.21000E 02	6	1.38230E 03	2.77719E 03	1.00000E 00		0
24	2.22000E 02	2.23000E 02	6	1.39487E 03	2.80231E 03	1.00000E 00		0
25	2.24000E 02	2.25000E 02	7	1.40743E 03	2.82744E 03	1.00000E 00		0
26	2.26000E 02	2.27000E 02	7	1.42000E 03	2.85256E 03	1.00000E 00		0
27	2.28000E 02	2.29000E 02	7	1.43257E 03	2.87766E 03	1.00000E 00		0
28	2.30000E 02	2.31000E 02	7	1.44513E 03	2.90284E 03	1.00000E 00		0
29	2.32000E 02	2.33000E 02	7	1.45770E 03	2.92797E 03	1.00000E 00		0
30	2.34000E 02	2.35000E 02	7	1.47027E 03	2.95309E 03	1.00000E 00		0
31	2.36000E 02	2.37000E 02	7	1.48283E 03	2.97825E 03	1.00000E 00		0
32	2.38000E 02	2.39000E 02	7	1.49540E 03	3.00338E 03	1.00000E 00		0
33	2.40000E 02	2.41000E 02	7	1.50796E 03	3.02850E 03	1.00000E 00		0
34	2.42000E 02	2.43000E 02	7	1.52053E 03	3.05359E 03	1.00000E 00		0
35	2.44000E 02	2.45000E 02	8	1.53310E 03	3.07875E 03	1.00000E 00		0
36	2.46000E 02	2.47000E 02	8	1.54566E 03	3.10391E 03	1.00000E 00		0
37	2.48000E 02	2.49000E 02	8	1.55823E 03	3.12903E 03	1.00000E 00		0
38	2.50000E 02	2.51000E 02	8	1.57080E 03	3.15416E 03	1.00000E 00		0
39	2.52000E 02	2.53000E 02	8	1.58336E 03	3.17931E 03	1.00000E 00		0
40	2.54000E 02	2.55000E 02	8	1.59593E 03	3.20444E 03	1.00000E 00		0
41	2.56000E 02	2.57000E 02	8	1.60850E 03	3.22950E 03	1.00000E 00		0
42	2.58000E 02	2.59000E 02	8	1.62106E 03	3.25472E 03	1.00000E 00		0
43	2.60000E 02	2.61000E 02	8	1.63363E 03	3.27981E 03	1.00000E 00		0
44	2.62000E 02	2.63000E 02	8	1.64619E 03	3.30497E 03	1.00000E 00		0
45	2.64000E 02	2.65000E 02	9	1.65876E 03	3.33009E 03	1.00000E 00		0
46	2.66000E 02	2.67000E 02	9	1.67133E 03	3.35522E 03	1.00000E 00		0
47	2.68000E 02	2.69000E 02	9	1.68389E 03	3.38031E 03	1.00000E 00		0
48	2.70000E 02	2.71000E 02	9	1.69646E 03	3.40550E 03	1.00000E 00		0
49	2.72000E 02	2.73000E 02	9	1.70903E 03	3.43063E 03	1.00000E 00		0
50	2.74000E 02	2.75000E 02	9	1.72159E 03	3.45575E 03	1.00000E 00		0
51	2.76000E 02	2.77000E 02	9	1.73416E 03	3.48091E 03	1.00000E 00		0
52	2.78000E 02	2.79000E 02	9	1.74673E 03	3.50603E 03	1.00000E 00		0
53	2.80000E 02	2.81000E 02	9	1.75929E 03	3.53113E 03	1.00000E 00		0
54	2.82000E 02	2.83000E 02	9	1.77186E 03	3.55628E 03	1.00000E 00		0
55	2.84000E 02	2.85000E 02	9	1.78442E 03	3.58141E 03	1.00000E 00		0
56	2.86000E 02	2.87000E 02	9	1.79699E 03	3.60656E 03	1.00000E 00		0
57	2.88000E 02	2.89000E 02	9	1.80956E 03	3.63169E 03	1.00000E 00		0
58	2.90000E 02	2.91000E 02	9	1.82212E 03	3.65681E 03	1.00000E 00		0
59	2.92000E 02	2.93000E 02	9	1.83469E 03	3.68194E 03	1.00000E 00		0
60	2.94000E 02	2.95000E 02	10	1.84726E 03	3.70709E 03	1.00000E 00		0
61	2.96000E 02	2.97000E 02	10	1.85982E 03	3.73219E 03	1.00000E 00		0
62	2.98000E 02	2.99000E 02	10	1.87239E 03	3.75734E 03	1.00000E 00		0
63	3.00000E 02			1.88496E 03				

ELAPSED TIME 0.09 MIN.

OUTER	INNER	BALANCE	UPSCATTER RATIO	EIGENVALUE	LAMBDA1	LAMBDA2	TIME(MIN)
GRP. 1	REQUIRED	10 ITERATIONS.	MED OF	6.17370E-05 OCCURRED IN	INT. 62	COARSE MESH= 8	
GRP. 2	REQUIRED	10 ITERATIONS.	MED OF	4.66346E-05 OCCURRED IN	INT. 1	COARSE MESH= 9	
GRP. 3	REQUIRED	8 ITERATIONS.	MED OF	8.43890E-05 OCCURRED IN	INT. 60	COARSE MESH= 9	
GRP. 4	REQUIRED	8 ITERATIONS.	MED OF	9.70134E-05 OCCURRED IN	INT. 62	COARSE MESH= 9	
GRP. 5	REQUIRED	8 ITERATIONS.	MED OF	2.28544E-05 OCCURRED IN	INT. 62	COARSE MESH= 9	
GRP. 6	REQUIRED	8 ITERATIONS.	MED OF	2.62675E-05 OCCURRED IN	INT. 62	COARSE MESH= 9	
GRP. 7	REQUIRED	8 ITERATIONS.	MED OF	8.26647E-05 OCCURRED IN	INT. 62	COARSE MESH= 10	
GRP. 8	REQUIRED	8 ITERATIONS.	MED OF	2.47917E-05 OCCURRED IN	INT. 62	COARSE MESH= 9	
GRP. 9	REQUIRED	7 ITERATIONS.	MED OF	8.17627E-05 OCCURRED IN	INT. 62	COARSE MESH= 10	
GRP. 10	REQUIRED	7 ITERATIONS.	MED OF	4.41545E-05 OCCURRED IN	INT. 62	COARSE MESH= 10	

ALL GROUPS CONVERGED (796 ITERATIONS)

(REMAINDER OF ITERATION STATISTICS OMITTED)

(XSDRNPM OUTPUT CONTINUED ON NEXT PAGE)

00443

XSDRNPM OUTPUT (CONTINUED)

CTR STANDARD BLANKET SAMPLE PROBLEM

TOTAL FLUX

INT.	GRP. 1	GRP. 2	GRP. 3	GRP. 4	GRP. 5	GRP. 6	GRP. 7	GRP. 8
1	2.74786E-03	5.96001E-05	3.01681E-05	3.89223E-05	4.85861E-05	5.06855E-05	4.29727E-05	3.03541E-05
2	1.76831E-03	7.33357E-05	3.64052E-05	4.49229E-05	5.31817E-05	5.22632E-05	4.33040E-05	3.14966E-05
3	1.42634E-03	7.96583E-05	4.01680E-05	4.84013E-05	5.57244E-05	5.31116E-05	4.35168E-05	3.21501E-05
4	1.37280E-03	7.97068E-05	4.02663E-05	4.85076E-05	5.58341E-05	5.31895E-05	4.35718E-05	3.21940E-05
5	1.32139E-03	7.98287E-05	4.04141E-05	4.86743E-05	5.60197E-05	5.33349E-05	4.36798E-05	3.22733E-05
6	1.26217E-03	8.65610E-05	4.11402E-05	4.90009E-05	5.61258E-05	5.12686E-05	4.36527E-05	3.24303E-05
7	1.19641E-03	9.90426E-05	4.23097E-05	4.93728E-05	5.60352E-05	5.29092E-05	4.34259E-05	3.26012E-05
8	1.13459E-03	1.09951E-04	4.32681E-05	4.95838E-05	5.57944E-05	5.24584E-05	4.31263E-05	3.26850E-05
9	1.07650E-03	1.19427E-04	4.40306E-05	4.96471E-05	5.54167E-05	5.19233E-05	4.27595E-05	3.26888E-05
10	1.02191E-03	1.27597E-04	4.46113E-05	4.95741E-05	5.49142E-05	5.13105E-05	4.23305E-05	3.26191E-05
11	9.70599E-04	1.34579E-04	4.50229E-05	4.93756E-05	5.42974E-05	5.06258E-05	4.18437E-05	3.24821E-05
12	9.29122E-04	1.35995E-04	4.49071E-05	4.90447E-05	5.38040E-05	5.01529E-05	4.14926E-05	3.23006E-05
13	8.96516E-04	1.32514E-04	4.43796E-05	4.86781E-05	5.35312E-05	4.99628E-05	4.13346E-05	3.21400E-05
14	8.65113E-04	1.29234E-04	4.39205E-05	4.83848E-05	5.33437E-05	4.98462E-05	4.12359E-05	3.20053E-05
15	7.72603E-04	1.36332E-04	4.43971E-05	4.80301E-05	5.23781E-05	4.87963E-05	4.05010E-05	3.17484E-05
16	6.34501E-04	1.48689E-04	4.50577E-05	4.70998E-05	5.02304E-05	4.65525E-05	3.88985E-05	3.10671E-05
17	5.24878E-04	1.52741E-04	4.45192E-05	4.53956E-05	4.75293E-05	4.39654E-05	3.69765E-05	2.99475E-05
18	4.37198E-04	1.51411E-04	4.31867E-05	4.32237E-05	4.45550E-05	4.12120E-05	3.48785E-05	2.85584E-05
19	3.66523E-04	1.46696E-04	4.13496E-05	4.07954E-05	4.14911E-05	3.84151E-05	3.27064E-05	2.70181E-05
20	3.09111E-04	1.39954E-04	3.92130E-05	3.82550E-05	3.84551E-05	3.56573E-05	3.05306E-05	2.54082E-05
21	2.62118E-04	1.32099E-04	3.69208E-05	3.56994E-05	3.55196E-05	3.29921E-05	2.83992E-05	2.37847E-05
22	2.23368E-04	1.23737E-04	3.45730E-05	3.31926E-05	3.27272E-05	3.04525E-05	2.63435E-05	2.21853E-05
23	1.91188E-04	1.15265E-04	3.22380E-05	3.07751E-05	3.01001E-05	2.80568E-05	2.43829E-05	2.06350E-05
24	1.64285E-04	1.06936E-04	2.99611E-05	2.84718E-05	2.76478E-05	2.58132E-05	2.25285E-05	1.91494E-05
25	1.41653E-04	9.89057E-05	2.77719E-05	2.62962E-05	2.53709E-05	2.37232E-05	2.07853E-05	1.77380E-05
26	1.22506E-04	9.12659E-05	2.56881E-05	2.42543E-05	2.32652E-05	2.17638E-05	1.91543E-05	1.64056E-05
27	1.06224E-04	8.40642E-05	2.37197E-05	2.23474E-05	2.13232E-05	1.99894E-05	1.76337E-05	1.51540E-05
28	9.23143E-05	7.73194E-05	2.18711E-05	2.05731E-05	1.95356E-05	1.83325E-05	1.62199E-05	1.39828E-05
29	8.03813E-05	7.10325E-05	2.01426E-05	1.89272E-05	1.78925E-05	1.68049E-05	1.49081E-05	1.28904E-05
30	7.01075E-05	6.51927E-05	1.85322E-05	1.74040E-05	1.63838E-05	1.53981E-05	1.36929E-05	1.18741E-05
31	6.12340E-05	5.97823E-05	1.70363E-05	1.59975E-05	1.49995E-05	1.41034E-05	1.25686E-05	1.09307E-05
32	5.35486E-05	5.47796E-05	1.56501E-05	1.47012E-05	1.37299E-05	1.29125E-05	1.15293E-05	1.00568E-05
33	4.68765E-05	5.01610E-05	1.43683E-05	1.35086E-05	1.25660E-05	1.18173E-05	1.05692E-05	9.24876E-06
34	4.10718E-05	4.59027E-05	1.31855E-05	1.24137E-05	1.14990E-05	1.08100E-05	9.68254E-06	8.50322E-06
35	3.60129E-05	4.19805E-05	1.20962E-05	1.14106E-05	1.05208E-05	9.88328E-06	8.86385E-06	7.81693E-06
36	3.15971E-05	3.83712E-05	1.10954E-05	1.04941E-05	9.62353E-06	9.03007E-06	8.10776E-06	7.18703E-06
37	2.77374E-05	3.50523E-05	1.01782E-05	9.65883E-06	8.79949E-06	8.24363E-06	7.40915E-06	6.61123E-06
38	2.43600E-05	3.20026E-05	9.34046E-06	8.89970E-06	8.04116E-06	7.51744E-06	6.76306E-06	6.08805E-06
39	2.14015E-05	2.92019E-05	8.57892E-06	8.21384E-06	7.34076E-06	6.84513E-06	6.16469E-06	5.61711E-06
40	1.88076E-05	2.66311E-05	7.89121E-06	7.59963E-06	6.68995E-06	6.22036E-06	5.60935E-06	5.19971E-06
41	1.65315E-05	2.42728E-05	7.27631E-06	7.05636E-06	6.07916E-06	5.63678E-06	5.09242E-06	4.83055E-06
42	1.45329E-05	2.21101E-05	6.73488E-06	6.58449E-06	5.49674E-06	5.08790E-06	4.60927E-06	4.54389E-06
43	1.27749E-05	2.01271E-05	6.26986E-06	6.18592E-06	4.92762E-06	4.56659E-06	4.15524E-06	4.32529E-06
44	1.12280E-05	1.83094E-05	5.88732E-06	5.86450E-06	4.35089E-06	4.06497E-06	3.72492E-06	4.20439E-06
45	9.65528E-06	1.60108E-05	5.26870E-06	5.31764E-06	3.70848E-06	3.78139E-06	3.26378E-06	4.10462E-06
46	8.09383E-06	1.34145E-05	4.44345E-06	4.56167E-06	3.08715E-06	3.65055E-06	2.80443E-06	3.93129E-06
47	6.78227E-06	1.12854E-05	3.75108E-06	3.91098E-06	2.59705E-06	3.43243E-06	2.42046E-06	3.69653E-06
48	5.68170E-06	9.52405E-06	3.16301E-06	3.35194E-06	2.20124E-06	3.17178E-06	2.09461E-06	3.42955E-06
49	4.75878E-06	8.05679E-06	2.67882E-06	2.87200E-06	1.87546E-06	2.89600E-06	1.81549E-06	3.14983E-06
50	3.98524E-06	6.82782E-06	2.26536E-06	2.45998E-06	1.60342E-06	2.62150E-06	1.57499E-06	2.87015E-06
51	3.33714E-06	5.79397E-06	1.91614E-06	2.10608E-06	1.37377E-06	2.35783E-06	1.36703E-06	2.59858E-06
52	2.79426E-06	4.92153E-06	1.62074E-06	1.80178E-06	1.17839E-06	2.11020E-06	1.18674E-06	2.33997E-06
53	2.33965E-06	4.18343E-06	1.37043E-06	1.53967E-06	1.01125E-06	1.88116E-06	1.03019E-06	2.09687E-06
54	1.95901E-06	3.55777E-06	1.15785E-06	1.31334E-06	8.67742E-07	1.67154E-06	8.94044E-07	1.87024E-06
55	1.64034E-06	3.02663E-06	9.76659E-07	1.11701E-06	7.44296E-07	1.48118E-06	7.75461E-07	1.65968E-06
56	1.37360E-06	2.57514E-06	8.21329E-07	9.45481E-07	6.38114E-07	1.30931E-06	6.71928E-07	1.46400E-06
57	1.15033E-06	2.19095E-06	6.86800E-07	7.94060E-07	5.47074E-07	1.15488E-06	5.81208E-07	1.28151E-06
58	9.63527E-07	1.86361E-06	5.68213E-07	6.58194E-07	4.69734E-07	1.01669E-06	5.01177E-07	1.10994E-06
59	8.07377E-07	1.58418E-06	4.60441E-07	5.33217E-07	4.05419E-07	8.93588E-07	4.29665E-07	9.46115E-07
60	6.91642E-07	1.39391E-06	3.89339E-07	4.46277E-07	3.60478E-07	7.70399E-07	3.79993E-07	7.83247E-07
61	6.07790E-07	1.27362E-06	3.51337E-07	3.94273E-07	3.25769E-07	6.49096E-07	3.44837E-07	6.34543E-07
62	5.34012E-07	1.15881E-06	3.14006E-07	3.43951E-07	2.86029E-07	5.43174E-07	3.03257E-07	5.13599E-07

(REMAINDER OF TOTAL FLUX EDIT OMITTED)

(SUMMARY TABLES ALSO OMITTED)

(XSDRNPM OUTPUT CONTINUED ON NEXT PAGE)

00144

DLC-41: OUTPUT FROM JOB3 OF THE CTR STANDARD BLANKET SAMPLE PROBLEM (10 OF 10)

XSDRNPM OUTPUT (CONTINUED)

```
                    CTR STANDARD BLANKET SAMPLE PROBLEM
          ACTIVITY TABLE
      MATERIAL          REACTION
    1     1271            107
    2     1272             91
ACTIVITIES BY ZONE
 ZONE    ACT.  1        ACT.  2
    1   0.0            0.0
        ZONE     2 THRU ZONE     3 SAME AS ABOVE
    4   5.03678E-02    8.51586E-02
    5   0.0            0.0
    6   3.03962E-01    3.12412E-01
    7   2.46253E-01    1.24320E-01
    8   3.05156E-01    5.17466E-02
    9   0.0            0.0
   10   6.61941E-02    1.03953E-03
   11   9.71932E-01    5.74677E-01
ZONE 11 HAS SYSTEM TOTALS
ACTIVITIES BY INTERVAL
 INT.    ACT.  1        ACT.  2
    1   0.0            0.0
        INT.     2 THRU INT.     5 SAME AS ABOVE
    6   1.33555E-05    2.40254E-05
    7   1.32977E-05    2.33447E-05
    8   1.32465E-05    2.26778E-05
    9   1.31997E-05    2.20255E-05
   10   1.31563E-05    2.13876E-05
   11   1.31166E-05    2.07637E-05
   12   0.0            0.0
        INT.    13 THRU INT.    14 SAME AS ABOVE
   15   1.27344E-05    1.79789E-05
   16   1.24287E-05    1.61614E-05
   17   1.21283E-05    1.45294E-05
   18   1.18184E-05    1.30684E-05
   19   1.15010E-05    1.17627E-05
   20   1.11789E-05    1.05962E-05
   21   1.08547E-05    9.55400E-06
   22   1.05311E-05    8.62206E-06
   23   1.02103E-05    7.78780E-06
   24   9.89425E-06    7.04001E-06
   25   9.58495E-06    6.36881E-06
   26   9.28413E-06    5.76550E-06
   27   8.99352E-06    5.22250E-06
   28   8.71480E-06    4.73315E-06
   29   8.44971E-06    4.29163E-06
   30   8.20010E-06    3.89287E-06
   31   7.96806E-06    3.53241E-06
   32   7.75595E-06    3.20632E-06
   33   7.56664E-06    2.91116E-06
   34   7.40369E-06    2.64388E-06
   35   7.27173E-06    2.40180E-06
   36   7.17700E-06    2.18255E-06
   37   7.12828E-06    1.98400E-06
   38   7.13849E-06    1.80431E-06
   39   7.22778E-06    1.64186E-06
   40   7.43012E-06    1.49530E-06
   41   7.80794E-06    1.36350E-06
   42   8.50020E-06    1.24558E-06
   43   9.86312E-06    1.14091E-06
   44   2.53149E-05    1.04926E-06
   45   0.0            0.0
        INT.    46 THRU INT.    59 SAME AS ABOVE
   60   1.48392E-05    1.06888E-07
   61   1.91132E-06    9.25307E-08
   62   1.07806E-06    7.92971E-08
  ELAPSED TIME    1.54 MIN.
IHC002I STOP       0
```

(N,A)T IN LI-6

(N,N'A)T IN LI-7

THESE ARE THE TOTAL TRITIUM PRODUCTION FOR THE SYSTEM

(END OF XSDRNPM OUTPUT)

DLC-41: JCL AND INPUT DATA FOR JOB4 OF THE CTR STANDARD BLANKET SAMPLE PROBLEM (1 OF 2)

```
//IJR5ASAM JOB (15334),'J B WRIGHT 6025'
//*CLASS CPU91=5M,IO=20,REGION=410K,SPECIAL=TAPE
//GIP EXEC FORTHCLG,REGION.GO=240K
//SYSPRINT DD DUMMY
//FORT.SYSIN DD UNIT=TAPE9,DISP=(OLD,PASS),
// VOL=SER=RE0002,LABEL=(1,NL),
// DCB=(RECFM=FB,LRECL=80,BLKSIZE=3200)
//GO.FT06F001 DD SYSOUT=A,DCB=(RECFM=FBA,LRECL=133,BLKSIZE=3458)
//GO.FT09F001 DD UNIT=TAPE9,DISP=(OLD,PASS),
// VOL=SER=X5474,
// LABEL=(1,NL),
// DCB=(RECFM=VBS,LRECL=X,BLKSIZE=3520)
//GO.FT08F001 DD UNIT=SYSDA,
// DCB=(RECFM=VBS,LRECL=X,BLKSIZE=3520,BUFL=4000),
//   SPACE=(3520,(2000,50)),DSN=&&GIP00,DISP=(NEW,PASS)
//FT01F001 DD UNIT=SYSDA,DISP=(NEW,DELETE),
//   SPACE=(3504,(300,300)),DCB=(LRECL=700,BLKSIZE=3504,RECFM=VBS)
//FT02F001 DD UNIT=SYSDA,DISP=(NEW,DELETE),
//   SPACE=(3504,(300,300)),DCB=(LRECL=700,BLKSIZE=3504,RECFM=VBS)
//FT03F001 DD UNIT=SYSDA,DISP=(NEW,DELETE),
//   SPACE=(3504,(300,300)),DCB=(LRECL=700,BLKSIZE=3504,RECFM=VBS)
//FT04F001 DD UNIT=SYSDA,DISP=(NEW,DELETE),
//   SPACE=(3504,(300,300)),DCB=(LRECL=700,BLKSIZE=3504,RECFM=VBS)
//GO.FT05F001 DD *
GIP RUN FOR CTR STANDARD BLANKET
1$$ 121 5 6 126 22 0 16 30 0 3 1 2 0 E T
10$$ 17 18 19 20 21 22 23 24 204 25 26 27 28 29 30
11$$ 5 6 7 8 5 6 7 8 9 10 11 12 13 14 15 16 1 2 3 4 9 13
12** 4R .05556 4R .003334 4R .003234 4R .04038  4R .0804 .003234 .04038
13$$ 1 2 3 4 7 8 9 10 13 14 15 16 19 20 21 22 T
```

GIP SOURCE PROGRAM

GIP (PREPARE GROUP INDEPENDENT MACROSCOPIC CROSS SECTIONS FOR THE CTR STANDARD BLANKET MODEL)

(100N,21G) ANISN LIBRARY FROM NITAWL

(100N,21G) GROUP INDEPENDENT TAPE (14 MATS.)

MIXING TABLE

DLC-41: JCL AND INPUT DATA FOR JOB4 OF THE CTR STANDARD BLANKET SAMPLE PROBLEM (2 OF 2)

ANISN (CALCULATE THE CTR STANDARD BLANKET MODEL AS A FIXED SOURCE PROBLEM)

NOTE: MAIN ROUTINE COMPILE TO INCREASE STORAGE

```
// EXEC FORTHC
      COMMON /SKPBUF/ LOCATN,JUMP,LFAST,LSLOW,JMP1,JMP2,JMP3
      COMMON /BULKBU/ D(1),LIM1,DUMY(54600)
      LOCATN =20000
      LFAST = 500000
      LSLOW = 500000
      LIM1 = 54600
      CALL CLEAR (3,LIM1)
      CALL CONTRL
      STOP
      END
//ANISN  EXEC FORTHCLG,PARM.FORT='NOSOURCE,NOMAP',
// PARM.LKED='LET,OVLY',REGION.GO=410K
//SYSPRINT DD DUMMY
//FORT.SYSIN DD UNIT=TAPE9,DISP=(OLD,PASS),
// VOL=SER=RF0002,LABEL=(2,NL),
// DCB=(RECFM=FB,LRECL=80,BLKSIZE=3200)
//LKED.SYSIN DD *
      ENTRY MAIN
 OVERLAY LEVEL1
 INSERT PLSNT,FIDO,TP,ADJNT,S804,S805,S814,WOT8,S966,FFREAD
 OVERLAY LEVEL1
 INSERT GUTS,S807,S810,S821,S824,S833,DT,CELL,S851
 OVERLAY LEVEL1
 INSERT FINPR,FINPR1,PUNSH,DTFEUN,FLTFX
 OVERLAY LEVEL2
 INSERT BT,SUMARY,FACTOR
 OVERLAY LEVEL2
 INSERT FEWG,WATE
//GO.FT06F001 DD SYSOUT=A,DCB=(RECFM=FBA,LRECL=133,BLKSIZE=3458)
//GO.FT01F001 DD UNIT=SYSDA,SPACE=(TRK,(900,50))
//GO.FT02F001 DD UNIT=SYSDA,SPACE=(TRK,(900,50))
//GO.FT04F001 DD UNIT=SYSDA,
// DCB=(RECFM=VBS,LRECL=X,BLKSIZE=3520,BUFL=4000),
//   SPACE=(3520,(2000,50)),DSN=&&GIP00,DISP=(OLD,PASS)
//GO.FT08F001 DD DUMMY
//GO.FT09F001 DD DUMMY
//GO.FT05F001 DD *
CTR STANDARD BLANKET TEST PROBLEM
15$$ 2 0 3 4 2 1 0 10
                    62 0 121 5 6 126 0 0 14 14 1 0 1 0 0 50 0 1 2 1 1
 1 0 0 3 1 1 0   16** 2Z 1.-4 1.420892 3Z 1.0 0.0 .5 1.-4 3Z  T
17** 1. F 0. T
3** F 0.0 T
1** F0.
4** 0. 150. 2I200. 5I200.5 2I203.5 29I204. 14I264. 2I294. 300.
5** F1.
6** 0. 2R1.73927-1 0. 4R1.63036-1
7** -5.08374-1 -3.59475-1 1M1 -9.40432-1 -8.68845-1 -3.59887-1 1M2
8$$ 1 2 3R3 6R4 3R5 10R6 10R7 10R8 15R9 3R10 9$$ 3R1 5 1 3R5 9 5
19$$ F 3
21** 2Z F1.0
22$$ -13 -14 23$$ 2 1 T
 T T
```

ANISN SOURCE PROGRAM

ANISN OVERLAY CARDS

(100N,21G) GROUP INDEPENDENT TAPE FROM GIP

ACTIVITY CALCULATION OF TRITIUM PRODUCTION

DLC-41: OUTPUT FROM JOB4 OF THE CTR STANDARD BLANKET SAMPLE PROBLEM (1 OF 6)

GIP (PREPARE GROUP INDEPENDENT MACROSCOPIC CROSS SECTIONS FOR THE CTR STANDARD BLANKET MODEL)

```
* * * PROBLEM BEGAN ON 77/77/77 (  0 ) AT TIME    HRS,  0.0 MIN. * * *

GROUP INPUT PROGRAM - - - - -GIP RUN FOR CTR STANDARD BLANKET
    1$ ARRAY      21 ENTRIES READ
    0T
 IGM   NO. OF GROUPS                                  121
 IHT   SIGMA(T) POSITION                                5
 IHS   SIGMA(G--G) POSITION                             6
 IHM   TABLE LENGTH                                   126
 MS    MIXING TABLE LENGTH                             22
 MCR   NO. OF MATERIALS FROM CARDS                      0
 MTP   NO. OF MATERIALS FROM LIB. TAPE                 16
 MTM   NO. OF MATERIALS (MCR+MTP+MIXTURES)             30
 ITH   0=DIRECT SOLUTION, 1=ADJOINT                     0
 ISCT  ORDER OF SCATTERING EXPANSION                    3
 IPRT  0=PRINT ALL, 1=NO PRINT, 2=PRINT MIXTURES        1
 IOUT  0=OUTPUT ALL MATLS, 1=NONE, 2=MIXT. ONLY         2
 IDOT  0=ANISN OUTPUT, 1=DOTIII, 2=DOTIV                0
 NBUF  NO. K-BYTES BUFFER SPACE (DEFAULT=60)           60
 15421 WORDS MEMORY REQUIRED VS. AVAILABLE 29640
             LIBRARY RECORD LENGTH =    15246,     EXTENDED TABLE LENGTH =      126

                          14 GROUPS,    2 THROUGH   15 GO ON TAPE    4
                         106 GROUPS,   16 THROUGH  121 GO ON TAPE    1

   10$ ARRAY      22 ENTRIES READ
   11$ ARRAY      22 ENTRIES READ
   12* ARRAY      22 ENTRIES READ
   13$ ARRAY      16 ENTRIES READ
    0T
    I     MIXTURE      COMPONENT     MULTIPLIER     TAPE ID      MIX CODE
          (10$)         (11$)          (12$)         (13$)        ( 7$)
    1      17            5          5.55600E-02       1            1
    2      18            6          5.55600E-02       2            2
    3      19            7          5.55600E-02       3            3
    4      20            8          5.55600E-02       4            4
    5      21            5          3.33400E-03       7            5
    6      22            6          3.33400E-03       8            6
    7      23            7          3.33400E-03       9            7
    8      24            8          3.33400E-03      10            8
    9      21            9          3.23400E-03      13            9
   10      22           10          3.23400E-03      14           10
   11      23           11          3.23400E-03      15           11
   12      24           12          3.23400E-03      16           12
   13      21           13          4.03800E-02      19           13
   14      22           14          4.03800E-02      20           14
   15      23           15          4.03800E-02      21           15
   16      24           16          4.03800E-02      22           16
   17      25            1          8.04000E-02                   17
   18      26            2          8.04000E-02                   18
   19      27            3          8.04000E-02                   19
   20      28            4          8.04000E-02                   20
   21      29            9          3.23400E-03                   21

   22      30           13          4.03800E-02                   22
   23                                                             23
   24                                                             24
   25                                                             25
   26                                                             26
   27                                                             27
   28                                                             28
   29                                                             29
   30                                                             30
```

(GIP OUTPUT CONTINUED ON NEXT PAGE)

DLC-41: OUTPUT FROM JOB4 OF THE CTR STANDARD BLANKET SAMPLE PROBLEM (2 OF 6)

GIP OUTPUT (CONTINUED)

```
ELEMENTS FROM LIBRARY TAPE
   MATL     ID      TITLE
      1      1       P0 C-12 CASE FOR COMBINED CTR & CRBR PROCESSING
      2      2       P1 C-12 CASE FOR COMBINED CTR & CRBR PROCESSING
      3      3       P2 C-12 CASE FOR COMBINED CTR & CRBR PROCESSING
      4      4       P3 C-12 CASE FOR COMBINED CTR & CRBR PROCESSING
      5      7       P0 NB-93 CASE FOR COMBINED CTR & CRBR PROCESSIN
      6      8       P1 NB-93 CASE FOR COMBINED CTR & CRBR PROCESSIN
      7      9       P2 NB-93 CASE FOR COMBINED CTR & CRBR PROCESSIN
      8     10       P3 NB-93 CASE FOR COMBINED CTR & CRBR PROCESSIN
      9     13       P0 LI-6  CASE FOR COMBINED CTR & CRBR PROCESSIN
     10     14       P1 LI-6  CASE FOR COMBINED CTR & CRBR PROCESSIN
     11     15       P2 LI-6  CASE FOR COMBINED CTR & CRBR PROCESSIN
     12     16       P3 LI-6  CASE FOR COMBINED CTR & CRBR PROCESSIN
     13     19       P0 LI-7  CASE FOR COMBINED CTR & CRBR PROCESSIN
     14     20       P1 LI-7  CASE FOR COMBINED CTR & CRBR PROCESSIN
     15     21       P2 LI-7  CASE FOR COMBINED CTR & CRBR PROCESSIN
     16     22       P3 LI-7  CASE FOR COMBINED CTR & CRBR PROCESSIN
  * * * ALL CROSS SECTIONS HAVE BEEN READ FROM CARDS AND LIBRARY TAPE  9, 1 GROUP SORTED DIRECTLY TO TAPE  3
  * * *    14 GROUPS HAVE BEEN MOVED FROM TAPE  4 TO TAPE  3

  * * * 1 GROUP HAS BEEN SORTED FROM  3 TO  1 A NEW COREFULL TO  4, THE BALANCE, IF ANY, TO  2
  * * *    14 GROUPS HAVE BEEN MOVED FROM TAPE  4 TO TAPE  3

  * * * 1 GROUP HAS BEEN SORTED FROM  3 TO  2 A NEW COREFULL TO  4, THE BALANCE, IF ANY, TO  1
  * * *    14 GROUPS HAVE BEEN MOVED FROM TAPE  4 TO TAPE  3

  * * * 1 GROUP HAS BEEN SORTED FROM  3 TO  1 A NEW COREFULL TO  4, THE BALANCE, IF ANY, TO  2
  * * *    14 GROUPS HAVE BEEN MOVED FROM TAPE  4 TO TAPE  3

  * * * 1 GROUP HAS BEEN SORTED FROM  3 TO  2 A NEW COREFULL TO  4, THE BALANCE, IF ANY, TO  1
  * * *    14 GROUPS HAVE BEEN MOVED FROM TAPE  4 TO TAPE  3

  * * * 1 GROUP HAS BEEN SORTED FROM  3 TO  1 A NEW COREFULL TO  4, THE BALANCE, IF ANY, TO  2
  * * *    14 GROUPS HAVE BEEN MOVED FROM TAPE  4 TO TAPE  3

  * * * 1 GROUP HAS BEEN SORTED FROM  3 TO  2 A NEW COREFULL TO  4, THE BALANCE, IF ANY, TO  1
  * * *    14 GROUPS HAVE BEEN MOVED FROM TAPE  4 TO TAPE  3

  * * * 1 GROUP HAS BEEN SORTED FROM  3 TO  1 A NEW COREFULL TO  4, THE BALANCE, IF ANY, TO  2
  * * *    14 GROUPS HAVE BEEN MOVED FROM TAPE  4 TO TAPE  3

  * * *     1 GROUPS HAVE BEEN MOVED FROM TAPE  2 TO TAPE  3

CROSS SECTIONS FOR GRP.   1
CROSS SECTIONS FOR GRP.   2
CROSS SECTIONS FOR GRP.   3
CROSS SECTIONS FOR GRP.   4
CROSS SECTIONS FOR GRP.   5
CROSS SECTIONS FOR GRP.   6
CROSS SECTIONS FOR GRP.   7
CROSS SECTIONS FOR GRP.   8
CROSS SECTIONS FOR GRP.   9
CROSS SECTIONS FOR GRP.  10
CROSS SECTIONS FOR GRP.  11
```

(SOME OUTPUT OMITTED)

```
CROSS SECTIONS FOR GRP. 119
CROSS SECTIONS FOR GRP. 120
CROSS SECTIONS FOR GRP. 121
* * * TOTAL PROBLEM CPU =  0 HRS,  0.0    MIN. * * * CPU INCREMENT =  0 HRS,  0.0    MIN. * * *

* * * PROBLEM BEGAN ON 77/77/77 (  0 ) AT TIME    HRS,  0.0 MIN. * * *

IHC217I FIOCS - END OF DATA SET ON UNIT    5
SUMMARY OF ERRORS FOR THIS JOB   ERROR NUMBER   NUMBER OF ERRORS
                                     217              1
```

(END OF GIP OUTPUT)

DLC-41: OUTPUT FROM JOB4 OF THE CTR STANDARD BLANKET SAMPLE PROBLEM (3 OF 6)

ANISN (CALCULATE THE CTR STANDARD BLANKET MODEL AS A FIXED SOURCE PROBLEM)

```
CTR STANDARD BLANKET TEST PROBLEM
  15$ ARRAY      36 ENTRIES READ
  16* ARRAY      14 ENTRIES READ
   OT
54152 LOCATIONS WILL BE USED FOR THIS PROBLEM
 2018 LOCATIONS WILL BE USED TO READ CROSS SECTIONS
14 X-SEC. SETS READ FROM GRP. INDEPENDENT TAPE
  17* ARRAY    7502 ENTRIES READ
   OT
   3* ARRAY    7502 ENTRIES READ
   OT
   1* ARRAY     121 ENTRIES READ
   4* ARRAY      63 ENTRIES READ
   5* ARRAY     121 ENTRIES READ
   6* ARRAY       8 ENTRIES READ
   7* ARRAY       8 ENTRIES READ
   8$ ARRAY      62 ENTRIES READ
   9$ ARRAY      10 ENTRIES READ
  19$ ARRAY      10 ENTRIES READ
  21* ARRAY      62 ENTRIES READ
  22$ ARRAY       2 ENTRIES READ
  23$ ARRAY       2 ENTRIES READ
   OT
CTR STANDARD BLANKET TEST PROBLEM
ID     PROBLEM ID NO.                      2        ITH    0/1 = REG./ADJ.                          0
ISCT   ORDER OF SCATTERING                 3        ISN    QUADRATURE ORDER                         4
IGE    1/2/3 = PLA/CYL/SPH                 2        IBL    0/1/2/3 = NO REFL/REFL/PER/WHITE         1
IBR    RT. B.C. SAME AS LEFT B.C.,IBL      0        IZM    NO. OF ZONES                            10
IM     NO. OF INTERVALS                   62        IEVT   0/1/2/3/4/5/6=Q/K/ALPHA/C/Z/R/H           0
IGM    NO. OF GROUPS                     121        IHT    POS. OF SIGMA T                          5
IHS    POS. OF SIGMA GG                    6        IHM    TABLE LENGTH                           126
MS     MIXING TABLE LENGTH                 0        MCR    NO. MATLS. FROM CARDS                    0
MTP    NO. MATLS. FROM LIB TAPE           14        MT     NO. OF MATLS.                           14
IDFM   0/1=NONE/DENSITY FACTORS(21*)       1        IPVT   0/1/2=NONE/K/ALPHA                        0
IQM    0/1=NONE/DIST. SOURCE               1        IPM    0/1/IM=NONE/S(MM,IPP)/S(MM,IM)           0
IPP    INTERVAL OF SHELL SOURCE            0        IIM    INNER ITER. MAX.                        50
ID1    0/1/2/3=NO/PRNT ND/PNCH N/BOTH      0        ID2    0/1/2=NO/X-SEC TAPE/PREV                 1
ID3    0/N=NO/N ACT. BY ZONE               2        ID4    0/1=NO/N ACT. BY INT.                    1
ICM    OUTER ITER. MAX.                    1        IDAT1  0/1/2=NO/MIN/MAX TAPE                    1
IDAT2  0/1=NO/DIFFUSION(24$)               0        IFG    0/1=NO/FEW GRP.                          0
IFLU   0/1/2=BOTH/LINEAR/STEP              3        IFN    0/1/2=INPUT 2*/3*/PREV. CASE             1
IPRT   0/1 = PRINT X-SEC/DO NOT            1        IXTR   0/1=CALC/READ P-L CONSTANTS              0
EV     EIGENVALUE GUESS          0.0               EVM    EIGENVALUE MODIFIER          0.0
EPS    PRECISION DESIRED         1.00000E-04       BF     BUCKLING FACTOR              1.42089E 00
DY     CYL OR PLA HEIGHT         0.0               DZ     PLANE DEPTH                  0.0
DFM1   HT. FOR VOID CORR.        0.0               XNF    NORM. FACTOR                 1.00000E 00
PV     IPVT=1/2 - K/ALPHA        0.0               RYF    LAMBDA2 RELAXATION           5.00000E-01
XLAL   PT CNVRG EPS. IF .NE.0    1.00000E-04       XLAH   1-LAMBDA MAX.-SEARCH        0.0
EQL    EV CHANGE EPS.-SEARCH     0.0               XNPM   NEW PARAM. MOD.-SEARCH      0.0
CTR STANDARD BLANKET TEST PROBLEM
INT.   ZONE NUMBER      RADIUS          AREA          VOLUME       FISS DENS    DENS FACTOR
  1        1                0              0        7.06858E 04       0              0
  2        2        1.50000E 02   9.42478E 02   5.49779E 04       0              0
  3        3        2.00000E 02   1.25664E 03   2.09469E 02       0        1.00000E 00
  4        3        2.00167E 02   1.25768E 03   2.09688E 02       0        1.00000E 00
```

(ANISN OUTPUT CONTINUED ON NEXT PAGE)

ANISN OUTPUT (CONTINUED)

5	3	2.00333E 02	1.25873E 03	2.09844E 02	0	1.00000E 00
6	4	2.00500E 02	1.25978E 03	6.30688E 02	0	1.00000E 00
7	4	2.01000E 02	1.26292E 03	6.32250E 02	0	1.00000E 00
8	4	2.01500E 02	1.26606E 03	6.33813E 02	0	1.00000E 00
9	4	2.02000E 02	1.26920E 03	6.35375E 02	0	1.00000E 00
10	4	2.02500E 02	1.27234E 03	6.36938E 02	0	1.00000E 00
11	4	2.03000E 02	1.27549E 03	6.38531E 02	0	1.00000E 00
12	5	2.03500E 02	1.27863E 03	2.13219E 02	0	1.00000E 00
13	5	2.03667E 02	1.27967E 03	2.13406E 02	0	1.00000E 00
14	5	2.03833E 02	1.28072E 03	2.13563E 02	0	1.00000E 00
15	6	2.04000E 02	1.28177E 03	2.57613E 03	0	1.00000E 00
16	6	2.06000E 02	1.29434E 03	2.60125E 03	0	1.00000E 00
17	6	2.08000E 02	1.30690E 03	2.62638E 03	0	1.00000E 00
18	6	2.10000E 02	1.31947E 03	2.65150E 03	0	1.00000E 00
19	6	2.12000E 02	1.33204E 03	2.67663E 03	0	1.00000E 00
20	6	2.14000E 02	1.34460E 03	2.70175E 03	0	1.00000E 00
21	6	2.16000E 02	1.35717E 03	2.72691E 03	0	1.00000E 00
22	6	2.18000E 02	1.36973E 03	2.75203E 03	0	1.00000E 00
23	6	2.20000E 02	1.38230E 03	2.77719E 03	0	1.00000E 00
24	6	2.22000E 02	1.39487E 03	2.80231E 03	0	1.00000E 00
25	7	2.24000E 02	1.40743E 03	2.82744E 03	0	1.00000E 00
26	7	2.26000E 02	1.42000E 03	2.85256E 03	0	1.00000E 00
27	7	2.28000E 02	1.43257E 03	2.87766E 03	0	1.00000E 00
28	7	2.30000E 02	1.44513E 03	2.90284E 03	0	1.00000E 00
29	7	2.32000E 02	1.45770E 03	2.92797E 03	0	1.00000E 00
30	7	2.34000E 02	1.47027E 03	2.95309E 03	0	1.00000E 00
31	7	2.36000E 02	1.48283E 03	2.97825E 03	0	1.00000E 00
32	7	2.38000E 02	1.49540E 03	3.00338E 03	0	1.00000E 00
33	7	2.40000E 02	1.50796E 03	3.02850E 03	0	1.00000E 00
34	7	2.42000E 02	1.52053E 03	3.05359E 03	0	1.00000E 00
35	8	2.44000E 02	1.53310E 03	3.07875E 03	0	1.00000E 00
36	8	2.46000E 02	1.54566E 03	3.10391E 03	0	1.00000E 00
37	8	2.48000E 02	1.55823E 03	3.12903E 03	0	1.00000E 00
38	8	2.50000E 02	1.57080E 03	3.15416E 03	0	1.00000E 00
39	8	2.52000E 02	1.58336E 03	3.17931E 03	0	1.00000E 00
40	8	2.54000E 02	1.59593E 03	3.20444E 03	0	1.00000E 00
41	8	2.56000E 02	1.60850E 03	3.22950E 03	0	1.00000E 00
42	8	2.58000E 02	1.62106E 03	3.25472E 03	0	1.00000E 00
43	8	2.60000E 02	1.63363E 03	3.27981E 03	0	1.00000E 00
44	8	2.62000E 02	1.64619E 03	3.30497E 03	0	1.00000E 00
45	9	2.64000E 02	1.65876E 03	3.33009E 03	0	1.00000E 00
46	9	2.66000E 02	1.67133E 03	3.35522E 03	0	1.00000E 00
47	9	2.68000E 02	1.68389E 03	3.38031E 03	0	1.00000E 00
48	9	2.70000E 02	1.69646E 03	3.40550E 03	0	1.00000E 00
49	9	2.72000E 02	1.70903E 03	3.43063E 03	0	1.00000E 00
50	9	2.74000E 02	1.72159E 03	3.45575E 03	0	1.00000E 00
51	9	2.76000E 02	1.73416E 03	3.48091E 03	0	1.00000E 00
52	9	2.78000E 02	1.74673E 03	3.50603E 03	0	1.00000E 00
53	9	2.80000E 02	1.75929E 03	3.53113E 03	0	1.00000E 00
54	9	2.82000E 02	1.77186E 03	3.55628E 03	0	1.00000E 00
55	9	2.84000E 02	1.78442E 03	3.58141E 03	0	1.00000E 00
56	9	2.86000E 02	1.79699E 03	3.60656E 03	0	1.00000E 00
57	9	2.88000E 02	1.80956E 03	3.63169E 03	0	1.00000E 00
58	9	2.90000E 02	1.82212E 03	3.65681E 03	0	1.00000E 00
59	9	2.92000E 02	1.83469E 03	3.68194E 03	0	1.00000E 00
60	10	2.94000E 02	1.84726E 03	3.70709E 03	0	1.00000E 00
61	10	2.96000E 02	1.85982E 03	3.73219E 03	0	1.00000E 00
62	10	2.98000E 02	1.87239E 03	3.75734E 03	0	1.00000E 00
63		3.00000E 02	1.88496E 03			

CTR STANDARD BLANKET TEST ERCELEM

(ANISN OUTPUT CONTINUED ON NEXT PAGE)

DLC-41: OUTPUT FROM JOB4 OF THE CTR STANDARD BLANKET SAMPLE PROBLEM (5 OF 6)

ANISN OUTPUT (CONTINUED)

```
        FISS SPEC      VELOCITY     RT ALBEDO     LFT ALBEDO   DIFF MARKER    MAT'L/ZONE     L OF P(I)    RADIUS MOD
   1        0         1.00000E 00                                                 1              3            0
   2        0         1.00000E 00                                                 1              3            0
   3        0         1.00000E 00                                                 1              3            0
   4        0         1.00000E 00                                                 5              3            0
   5        0         1.00000E 00                                                 1              3            0
   6        0         1.00000E 00                                                 5              3            0
   7        0         1.00000E 00                                                 5              3            0
   8        0         1.00000E 00                                                 5              3            0
   9        0         1.00000E 00                                                 9              3            0
  10        0         1.00000E 00                                                 5              3            0
  11        0         1.00000E 00
  12        0         1.00000E 00
  13        0         1.00000E 00
  14        0         1.00000E 00
  15        0         1.00000E 00
```

(SOME OUTPUT OMITTED)

```
 120        0         1.00000E 00
 121        0         1.00000E 00
CTR STANDARD BLANKET TEST PROBLEM
          CROSS SECTION MIXING TABLE                                          ANGULAR  QUADRATURE  CONSTANTS
        MIXTURE      COMPONENT      NO. DENSITY                   COSINE (MU)      WEIGHT     REFL DIRECT    WT. X COS.
   1                                                             -5.08374E-01        0          3              0
   2                                                             -3.59475E-01  1.73927E-01      3       -6.25223E-02
   3                                                              3.59475E-01  1.73927E-01      2        6.25223E-02
   4                                                             -9.40431E-01        0          8              0
   5                                                             -8.68844E-01  1.63036E-01      8       -1.41653E-01
   6                                                             -3.59887E-01  1.63036E-01      7       -5.86745E-02
   7                                                              3.59887E-01  1.63036E-01      6        5.86745E-02
   8                                                              8.68844E-01  1.63036E-01      5        1.41653E-01
CONSTANTS FOR P( 3) SCATTERING
ANGL     SET  1       SET  2       SET  3       SET  4       SET  5
   1 -5.08374E-01  6.12333E-01  2.23819E-01 -8.42969E-01 -1.03870E-01
   2 -3.59474E-01  6.12333E-01  0.0         -5.96069E-01  7.34470E-02
   3  3.59475E-01  6.12333E-01  0.0          5.96069E-01 -7.34468E-02
   4 -9.40431E-01 -3.26617E-01  7.65922E-01  2.43060E-01 -6.57539E-01
   5 -8.68844E-01 -3.26617E-01  5.41585E-01  2.24558E-01 -2.51622E-01
   6 -3.59887E-01 -3.26617E-01 -5.41590E-01  9.30148E-02  6.07486E-01
   7  3.59887E-01 -3.26617E-01 -5.41589E-01 -9.30149E-02 -6.07486E-01
   8  8.68844E-01 -3.26617E-01  5.41586E-01 -2.24558E-01  2.51625E-01
 ELAPSED TIME    3.11 MIN.
OUTER INNER       NEUT BAL     UPSCATTER RATIO     EIGENVALUE          LAMBDA1          LAMBDA2
   0     0    0.0                0.0                 0.0                 0.0              0.0
GRP.    1 REQUIRED   10 ITERATIONS. MED OF  6.12080E-05 OCCURRED IN INT.  62  COARSE MESH=  8
GRP.    2 REQUIRED   10 ITERATIONS. MED OF  4.73667E-05 OCCURRED IN INT.   1  COARSE MESH=  9
GRP.    3 REQUIRED    8 ITERATIONS. MED OF  8.32253E-05 OCCURRED IN INT.  60  COARSE MESH=  9
GRP.    4 REQUIRED    9 ITERATIONS. MED OF  2.46252E-05 OCCURRED IN INT.  62  COARSE MESH=  9
GRP.    5 REQUIRED    8 ITERATIONS. MED OF  2.56378E-05 OCCURRED IN INT.  62  COARSE MESH=  9
GRP.    6 REQUIRED    8 ITERATIONS. MED OF  2.65828E-05 OCCURRED IN INT.  62  COARSE MESH=  9
GRP.    7 REQUIRED    8 ITERATIONS. MED OF  8.19195E-05 OCCURRED IN INT.  62  COARSE MESH= 10
GRP.    8 REQUIRED    8 ITERATIONS. MED OF  2.28445E-05 OCCURRED IN INT.  61  COARSE MESH=  9
GRP.    9 REQUIRED    7 ITERATIONS. MED OF  8.27441E-05 OCCURRED IN INT.  62  COARSE MESH= 10
GRP.   10 REQUIRED    7 ITERATIONS. MED OF  4.15947E-05 OCCURRED IN INT.  62  COARSE MESH= 10
```

ALL GROUPS CONVERGED
TOTAL ITERATIONS = 790.

(REMAINDER OF ITERATION STATISTICS OMITTED)

(ANISN OUTPUT CONTINUED ON NEXT PAGE)

DLC-41: OUTPUT FROM JOB4 OF THE CTR STANDARD BLANKET SAMPLE PROBLEM (6 OF 6)

ANISN OUTPUT (CONTINUED)

```
CTR STANDARD BLANKET TEST PROBLEM
        ACTIVITY      MATERIAL      POSITION
           1            -13            2
           2            -14            1
```

ACTIVITY CALCULATION VIA DUMMY MATERIALS

```
ACTIVITIES BY ZONE INCLUDING SUM OVER ALL ZONES IN LINE 11
ZONE    ACT.  1        ACT.  2
   1   0.0            0.0
   2   0.0            0.0
   3   8.43992E-03    1.59631E-02
   4   5.03651E-02    8.51591E-02
   5   8.32068E-03    1.25968E-02
   6   3.03947E-01    3.12409E-01
   7   2.46239E-01    1.24317E-01
   8   3.05115E-01    5.17452E-02
   9   2.43828E 01    2.20071E-02
  10   6.61744E-02    1.03948E-03
  11   2.53710E 01    6.25220E-01
ACTIVITIES BY INTERVAL
INT.    ACT.  1        ACT.  2
   1   0.0            0.0
   2   0.0            0.0
   3   1.34336E-05    2.60732E-05
   4   1.34219E-05    2.53667E-05
   5   1.33995E-05    2.46970E-05
   6   1.33548E-05    2.40255E-05
   7   1.32970E-05    2.33449E-05
   8   1.32459E-05    2.26780E-05
   9   1.31990E-05    2.20257E-05
  10   1.31556E-05    2.13877E-05
  11   1.31160E-05    2.07639E-05
  12   1.30654E-05    2.01882E-05
  13   1.29992E-05    1.96678E-05
  14   1.29283E-05    1.91751E-05
  15   1.27337E-05    1.79788E-05
  16   1.24281E-05    1.61613E-05
  17   1.21277E-05    1.45293E-05
  18   1.18178E-05    1.30683E-05
  19   1.15004E-05    1.17626E-05
  20   1.11783E-05    1.05961E-05
  21   1.08542E-05    9.55390E-06
  22   1.05306E-05    8.62196E-06
  23   1.02097E-05    7.78770E-06
  24   9.89373E-06    7.03992E-06
```

(SOME OUTPUT OMITTED)

```
  35   7.27130E-06    2.40175E-06
  36   7.17656E-06    2.18249E-06
  37   7.12780E-06    1.98395E-06
  38   7.13796E-06    1.80426E-06
  39   7.22716E-06    1.64181E-06
  40   7.42936E-06    1.49526E-06
  41   7.80697E-06    1.36346E-06
  42   8.49899E-06    1.24554E-06
  43   9.86130E-06    1.14087E-06
  44   2.53095E-05    1.04922E-06
```

(SOME OUTPUT OMITTED)

```
  60   1.48345E-05    1.06883E-07
  61   1.91078E-06    9.25262E-08
  62   1.07796E-06    7.92932E-08
CTR STANDARD BLANKET TEST PROBLEM
TOTAL FLUX
```

(TOTAL FLUX OUTPUT OMITTED)

TRITIUM PRODUCTION OCCURS ONLY IN ZONES 4, 6, 7, 8, AND 10.

(ANISN AND XSDRNPM GIVE THE SAME RESULTS)

DISTRIBUTED SOURCE IN ONE GROUP

```
CTR STANDARD BLANKET TEST PROBLEM
DISTRIBUTED SOURCE - G=GROUP NO.     N=  0
INT.    G=N+  1        G=N+  2        G=N+  3        G=N+  4        G=N+  5        G=N+  6        G=N+  7        G=N+  8
   1   1.41471E-05    0.0            0.0            0.0            0.0            0.0            0.0            0.0
   2   0.0            0.0            0.0            0.0            0.0            0.0            0.0            0.0
       INT.    3 THRU INT.   62 SAME AS ABOVE
CTR STANDARD BLANKET TEST PROBLEM
DISTRIBUTED SOURCE - G=GROUP NO.     N=  8
INT.    G=N+  1        G=N+  2        G=N+  3        G=N+  4        G=N+  5        G=N+  6        G=N+  7        G=N+  8
   1   0.0            0.0            0.0            0.0            0.0            0.0            0.0            0.0
       INT.    2 THRU INT.   62 SAME AS ABOVE
CTR STANDARD BLANKET TEST PROBLEM
```

(SUMMARY TABLES OMITTED)

(END OF ANISN OUTPUT)