Lab Rec'd JAN 7 1981

ORNL/CFRP-80/19
8006226

ORNL
MASTER COPY

OAK RIDGE NATIONAL LABORATORY

UNION CARBIDE

Corrosion/Erosion Tests on Candidate Voloxidizer Materials

W. D. Holland

OPERATED BY
UNION CARBIDE CORPORATION
FOR THE UNITED STATES
DEPARTMENT OF ENERGY

This report was prepared as an account of work sponsored by an agency of the United States Government. Neither the United States Government nor any agency thereof, nor any of their employees, makes any warranty, express or implied, or assumes any legal liability or responsibility for the accuracy, completeness, or usefulness of any information, apparatus, product, or process disclosed, or represents that its use would not infringe privately owned rights. Reference herein to any specific commercial product, process, or service by trade name, trademark, manufacturer, or otherwise, does not necessarily constitute or imply its endorsement, recommendation, or favoring by the United States Government or any agency thereof. The views and opinions of authors expressed herein do not necessarily state or reflect those of the United States Government or any agency thereof.

ORNL/CFRP-80/19

Contract No. W-7405-eng-26

Consolidated Fuel Reprocessing Program

CORROSION/EROSION TESTS ON CANDIDATE VOLOXIDIZER MATERIALS

W. D. Holland
Tennessee Technological University

Date Published: December 1980

OAK RIDGE NATIONAL LABORATORY
Oak Ridge, Tennessee 37830
operated by
UNION CARBIDE CORPORATION
for the
DEPARTMENT OF ENERGY

CONTENTS

ABSTRACT 1

1. INTRODUCTION 1

2. APPARATUS AND PROCEDURES 2

3. RESULTS 5

3.1 Test Conditions 5

3.2 Sample Point Nomenclature 7

3.3 Discussion 7

4. CONCLUSIONS 15

CORROSION/EROSION TESTS ON CANDIDATE VOLOXIDIZER MATERIALS

W. D. Holland*
Tennessee Technological University

ABSTRACT

Results of corrosion/erosion tests on type 316 stainless steel and Incoloy 800H are reported. Tests were conducted at 650°C in a rotating drum containing a simulated solid voloxidizer charge. After a test period of approximately six months, the corrosion/erosion rate for both materials was found to be essentially the same. In one series of tests, the thickness change was found to be approximately 1.5 mils. In a duplicate series of tests at the same conditions, neither material showed a significant thickness change.

1. INTRODUCTION

Voloxidation is a process being developed for the removal of volatile fission products from spent nuclear fuel prior to aqueous reprocessing. In this process, sheared fuel elements are heated to about 600°C in an oxidizing atmosphere. At these conditions, the UO_2 in the fuel is converted to U_3O_8 with a resultant change in density that causes considerable breakup of the solid fuel. The voloxidizer is, in essence, a rotary kiln containing lifting flights and heating and cooling zones. The tumbling action experienced by the sheared fuel elements, plus the crumbling caused by the density change, results in much of the solid being removed from the stainless steel (ss) hulls. The net effect of this is that volatile fission products, specifically tritium, and to some extent iodine and certain noble gases, can more easily escape from the solid substrate.

A typical voloxidizer might be 2- to 3-ft-diam × 20- to 40-ft-long. It would consist of two zones — a heated zone (comprising about half the total length) which is maintained at about 600°C, followed by a cooling

---

*The research for this report was conducted while the author was a member of the Chemical Technology Division.

zone operated in such a way that the solids exit the unit at approximately 150°C. Solids loading would be about 10% by volume, and the rotational speed would be approximately 1 rpm. Solids flow to the unit would be from 1 to 3 t/d.

Under the above conditions of high temperature operation in an oxidizing atmosphere, and with the potential surface abrasion caused by the ceramic solids and metal hulls, the selection of a suitable construction material for the voloxidizer becomes extremely important. Little experimental data are available at the proposed operating conditions; therefore, a corrosion/erosion test program was initiated to evaluate possible construction materials for prototype voloxidizers to be tested in a planned experimental facility at Oak Ridge National Laboratory (ORNL).

This report describes (1) the initial work in a corrosion/erosion test program and (2) future plans for such a program. The first efforts were directed toward a rough screening in which two candidate materials were subjected to surface erosion at high temperature. In these tests, two 1 1/2-ft-diam drums were made from the two candidate materials, type 316 SS and Incoloy 800H, both of nominal 1/4-in. thickness. The drums were equipped with endplates, lifting flights, and loading ports. The drums were then mounted horizontally in furnaces, loaded with simulated solid materials consisting of ceramic powders and sheared rods, and rotated at a temperature of 650°C for several months. Wall thickness measurements were made periodically at specific locations on the test surfaces. The results of this initial phase of the corrosion/erosion test program, covering 156 days of operation, are reported here.

2. APPARATUS AND PROCEDURES

The test apparatus was designed and constructed to simulate the conditions of temperature and erosion that would be present in an operating voloxidizer. It consisted of a test drum, a drive mechanism to provide rotation to the drum, and a furnace to provide the necessary temperature control. Two identical units were constructed and operated simultaneously.

Each test drum was made from nominal 1/4-in.-thick stock of the materials to be tested — type 316 SS (ASTM A240) and Incoloy 800H (ASTM B409). Each drum contained one test surface of each of the two materials. The test surfaces were made by rolling and welding a 7-1/2-in.-wide piece of the 1/4-in. stock into an 18-1/2-in.-diam cylindrical shell and then attaching the shells to each side of a 5-in.-wide centershell made of type 316 SS. The centershell contained a 3-5/8-in.-diam covered port that was used to load and unload a simulated charge of solid material into the drum. A sketch of a typical test drum is shown in Fig. 1.

Each drum was also equipped with circular endplates of 21-in.-diam, 1/4-in.-thick SS. The entire unit was held together using locking tabs and bolted sections of threaded rod that extended from one endplate to the other around the outside circumference of the drum. Drive shafts of 1-1/2-in.-diam SS were attached to the centers of each endplate. When assembled in the furnace, each shaft extended through the furnace wall and was supported on the outside of the furnace using pillow blocks. A drive unit consisting of an electric motor, a gear reduction unit, and a V-belt pulley arrangement was used to provide the desired rotation for the drum.

The furnaces used were commercially available, electrically heated units capable of providing controlled temperatures up to 650°C. Air blowers were installed to provide cooling around each drive shaft, but the additional cooling was found to be unnecessary.

The test surfaces under study were the interior surfaces of the cylinders on each end of a test drum. Each surface was divided into six equal sections by installing 1-in.-wide lifter blades made of 1/4-in. stock. The purpose of these blades was to simulate the lifting action of the flights installed in a voloxidizer to provide motion to the solids.

On each of the six test sections, certain test points were marked in a pattern to be described later. Markings were made on the outside surface so that a probe used to determine the thickness of the metal wall could be positioned at a particular test point after each test period. Thickness measurements were made periodically by staff members of the Department of Quality Assurance and Inspection, ORNL, using an ultrasonic thickness-measuring device.

ORNL DWG 80-6985

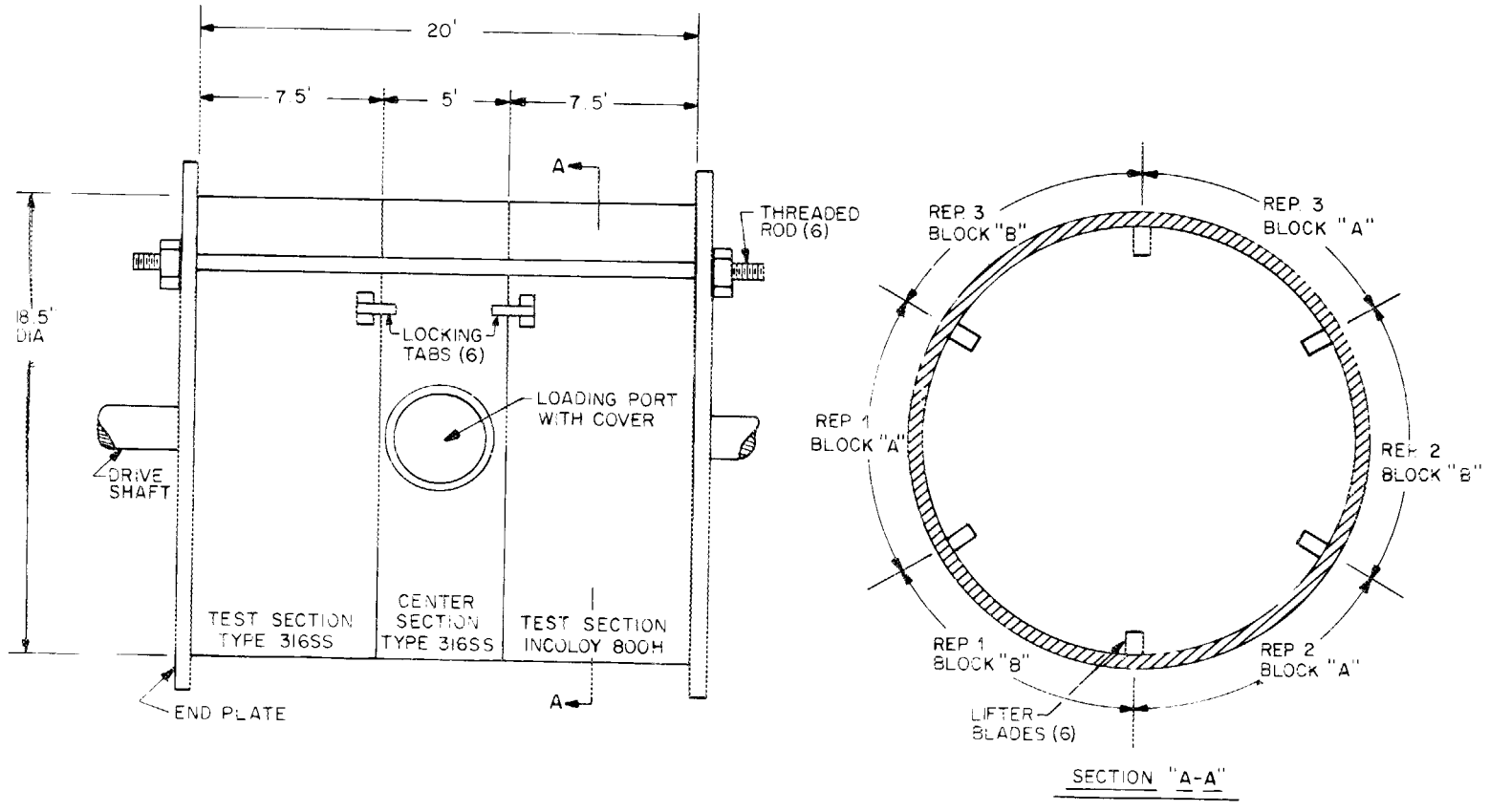

Fig. 1. Corrosion/erosion test drum.

3. RESULTS

After initial assembly, the test apparatus was loaded with solid materials and rotated at 650°C for various time intervals. The apparatus was stopped periodically and allowed to cool, and thickness measurements were made at prescribed test points located on the test surfaces. This section describes the test conditions, the times of exposure, and the test point locations on the test surface. It also presents the measured wall thickness values and discusses the statistical procedures used to analyze the data.

3.1 Test Conditions

The following is a schedule of the runs made and the time intervals between thickness measurements:

DATE	DESCRIPTION	
03/28/68	Initial thickness measurement	Reading 1
05/01/78	Drums loaded with 10 kg ceramic-filled SS hulls each; ∿9% loading by volume; 1 rpm at 650°C	23 days
05/24/78	Test stopped for thickness measurement; test resumed	Reading 2
08/07/78	Test stopped	75 days
08/08/78	Thickness measurement made	Reading 3
08/22/78	Test resumed; drums loaded with 10 kg of steel reinforcing rods; ∿3% loading by volume; 1 rpm at 650°C	35 days
10/27/78	Test stopped	
12/12/78	Thickness measurement made	Reading 4
02/20/79	Test resumed; drums loaded with 10 kg SS rods; ∿2% loading by volume; 1 rpm at 650°C	76 days
05/07/79	Test stopped	
05/10/79	Thickness measurement made	Reading 5

07/20/79	Test resumed; drums loaded with 10 kg SS rods plus 1 kg sand; ∿2% loading by volume	80 days
10/08/79	Test stopped	
10/12/79	Thickness measurement made	Reading 6

There are five distinct test periods between the six series of thickness measurements. In the first two periods, the drums were loaded with 10 kg each of ceramic-filled SS hulls. This material had a thin wall, and a considerable amount of ceramic material came out of the hulls during the test. When it became apparent that only small changes, if any, were taking place in wall thickness when using the ceramic-filled hulls, more severe erosion conditions were imposed on the test surfaces.

Sheared pieces of steel reinforcing rods were then used in place of the ceramic-filled hulls. These pieces were larger and heavier than the hulls and were expected to produce more erosion. After 35 d of testing, it was noted that the rods themselves were experiencing severe erosion and corrosion. The diameters of the rods were reduced by approximately one-half of their initial values, and copious quantities of iron oxide powder were found in the drums. The drums were cleaned for the last two periods, and sheared 1/4-in. SS rods were used as a solid charge. In the last of these tests, 1 kg of sand was also added to each drum.

The results of readings 1, 2, and 3 are not reported because of questionable calibration techniques used with the thickness measuring procedure. Fortunately, the most severe corrosion/erosion conditions were obtained and over half of the exposure time elapsed between readings 4 and 6. For readings 4, 5, and 6, the calibration procedure consisted of obtaining a thickness measurement (using a micrometer) at one specific location on each of the four test surfaces and adjusting the test instrument to read the measured thickness at that point. Thus, the thickness readings were obtained with a specific calibration for each material and each drum. This procedure was not used in the first three sets of readings. The total time of exposure between readings 4 and 6 was 156 d.

The thickness measurements are presented in Tables 1, 2, 3, and 4. As can be seen from these tables, type 316 SS had a nominal thickness of slightly over 0.25 in., whereas the Incoloy 800H had a thickness of slightly over 0.26 in.

3.2 Sample Point Nomenclature

There were two identical drums, 1 and 2, each containing a type 316 SS and an Incoloy 800H test surface. Each test surface was divided into six equal blocks by the six flights spaced around the circumference of the drum. The blocks were designated either A or B depending on the number of test points they contained. "A" blocks contained nine points (three rows of three points centered at the center of the block). These points are numbered as follows: first row — 1, 2, 3; second row — 4, 5, 6; third row — 7, 8, 9. Spacing between the columns and rows was 3 and 2.5 in. respectively. "B" blocks contained five points (a center point and four corner points). These points were numbered 11, 13, 15, 17, 19. This system was used so that the number of each point in each B block differed from the corresponding point in the A block by exactly 10. For example, the center point in an A block was 5, and in a B block it was 15. This numbering system was used so that comparisons between similarly located points could easily be made using the SAS* statistical program package to analyze the data. In addition, each A block and the B block located under it (when viewed through the open furnace door) were considered to be a replication. The replications were numbered 1, 2, and 3, with replication number 1 being the one containing the loading port. A diagram showing the layout of the sampling points is shown in Fig. 2.

3.3 Discussion

In addition to wall thickness measurements on the test surfaces, Tables 1 through 4 also present the measured thickness difference between readings 4 and 6 for each of the 42 points on each of the four test

---

*SAS 76, a statistical analysis program supplied by SAS Institute, Inc., P.O. Box 10066, Raleigh, NC 27605.

Table 1. Experimental results for type 316 SS (drum 1)

Location	Replication	Thickness readings No. 4	No. 5	No. 6	Difference R4-R6 (X10E4)	Percent difference
1	1	0.2524	0.2517	0.2519	5	0.20
1	2	0.2526	0.2529	0.2533	-7	-0.28
1	3	0.2532	0.2530	0.2530	2	0.08
2	1	0.2526	0.2522	0.2523	3	0.12
2	2	0.2541	0.2536	0.2539	2	0.08
2	3	0.2531	0.2536	0.2532	-1	-0.04
3	1	0.2531	0.2527	0.2524	7	0.28
3	2	0.2536	0.2538	0.2543	-7	-0.28
3	3	0.2533	0.2532	0.2533	0	0.0
4	1	0.2526	0.2525	0.2527	-1	-0.04
4	2	0.2532	0.2530	0.2532	0	0.0
4	3	0.2529	0.2531	0.2529	0	0.0
5	1	0.2532	0.2527	0.2534	-2	-0.08
5	2	0.2534	0.2538	0.2533	1	0.04
5	3	0.2534	0.2535	0.2531	3	0.12
6	1	0.2530	0.2532	0.2532	-2	-0.08
6	2	0.2534	0.2537	0.2528	6	0.24
6	3	0.2539	0.2528	0.2530	9	0.35
7	1	0.2528	0.2525	0.2527	1	0.04
7	2	0.2531	0.2534	0.2529	2	0.08
7	3	0.2528	0.2530	0.2528	0	0.0
8	1	0.2532	0.2528	0.2530	2	0.08
8	2	0.2532	0.2535	0.2534	-2	-0.08
8	3	0.2529	0.2533	0.2533	-4	-0.16
9	1	0.2535	0.2533	0.2535	0	0.0
9	2	0.2537	0.2542	0.2537	0	0.0
9	3	0.2533	0.2533	0.2532	1	0.04
11	1	0.2525	0.2525	0.2524	1	0.04
11	2	0.2525	0.2530	0.2529	-4	-0.16
11	3	0.2526	0.2520	0.2520	6	0.24
13	1	0.2535	0.2532	0.2531	4	0.16
13	2	0.2534	0.2536	0.2536	-2	-0.08
13	3	0.2530	0.2536	0.2533	-3	-0.12
15	1	0.2529	0.2522	0.2522	7	0.28
15	2	0.2530	0.2525	0.2526	4	0.16
15	3	0.2530	0.2526	0.2531	-1	-0.04
17	1	0.2535	0.2529	0.2529	6	0.24
17	2	0.2528	0.2530	0.2524	4	0.16
17	3	0.2532	0.2533	0.2529	3	0.12
19	1	0.2541	0.2542	0.2541	0	0.0
19	2	0.2534	0.2538	0.2533	1	0.04
19	3	0.2534	0.2535	0.2534	0	0.0

Table 2. Experimental results for type 316 SS (drum 2)

Location	Replication	Thickness readings No. 4	No. 5	No. 6	Difference R4-R6 (X10E4)	Percent difference
1	1	0.2517	0.2503	0.2492	25	0.99
1	2	0.2516	0.2508	0.2494	22	0.87
1	3	0.2510	0.2506	0.2500	10	0.40
2	1	0.2514	0.2505	0.2486	28	1.11
2	2	0.2510	0.2501	0.2486	24	0.96
2	3	0.2506	0.2497	0.2498	8	0.32
3	1	0.2507	0.2496	0.2477	30	1.20
3	2	0.2501	0.2493	0.2479	22	0.88
3	3	0.2496	0.2485	0.2483	13	0.52
4	1	0.2521	0.2509	0.2503	18	0.71
4	2	0.2516	0.2511	0.2498	18	0.72
4	3	0.2516	0.2515	0.2507	9	0.36
5	1	0.2517	0.2506	0.2492	25	0.99
5	2	0.2514	0.2508	0.2492	22	0.88
5	3	0.2510	0.2507	0.2503	7	0.28
6	1	0.2509	0.2502	0.2485	24	0.96
6	2	0.2510	0.2493	0.2485	25	1.00
6	3	0.2504	0.2496	0.2493	11	0.44
7	1	0.2523	0.2513	0.2504	19	0.75
7	2	0.2514	0.2509	0.2499	15	0.60
7	3	0.2516	0.2510	0.2509	7	0.28
8	1	0.2516	0.2513	0.2495	21	0.83
8	2	0.2508	0.2509	0.2493	15	0.60
8	3	0.2509	0.2502	0.2501	8	0.32
9	1	0.2510	0.2501	0.2502	8	0.32
9	2	0.2504	0.2492	0.2496	8	0.32
9	3	0.2502	0.2495	0.2492	10	0.40
11	1	0.2517	0.2508	0.2497	20	0.79
11	2	0.2511	0.2501	0.2501	10	0.40
11	3	0.2512	0.2504	0.2501	11	0.44
13	1	0.2508	0.2502	0.2484	24	0.96
13	2	0.2496	0.2491	0.2487	9	0.36
13	3	0.2500	0.2487	0.2484	16	0.64
15	1	0.2512	0.2503	0.2488	24	0.96
15	2	0.2506	0.2502	0.2502	4	0.16
15	3	0.2510	0.2506	0.2502	8	0.32
17	1	0.2517	0.2513	0.2498	19	0.75
17	2	0.2516	0.2511	0.2506	10	0.40
17	3	0.2516	0.2517	0.2511	5	0.20
19	1	0.2504	0.2498	0.2501	3	0.12
19	2	0.2497	0.2493	0.2489	8	0.32
19	3	0.2505	0.2495	0.2499	6	0.24

Table 3. Experimental results for Incoloy 800H (drum 1)

Location	Replication	Thickness readings No. 4	No. 5	No. 6	Difference R4-R6 (X10E4)	Percent difference
1	1	0.2636	0.2640	0.2632	4	0.15
1	2	0.2638	0.2638	0.2639	-1	-0.04
1	3	0.2615	0.2615	0.2605	10	0.38
2	1	0.2651	0.2649	0.2650	1	0.04
2	2	0.2646	0.2651	0.2646	0	0.0
2	3	0.2642	0.2638	0.2640	2	0.08
3	1	0.2666	0.2664	0.2658	8	0.30
3	2	0.2649	0.2647	0.2647	2	0.08
3	3	0.2667	0.2657	0.2659	8	0.30
4	1	0.2632	0.2638	0.2638	-6	-0.23
4	2	0.2644	0.2642	0.2639	5	0.19
4	3	0.2641	0.2642	0.2640	1	0.04
5	1	0.2650	0.2653	0.2644	6	0.23
5	2	0.2641	0.2648	0.2650	-9	-0.34
5	3	0.2656	0.2648	0.2658	-2	-0.08
6	1	0.2673	0.2669	0.2640	33	1.23
6	2	0.2633	0.2635	0.2631	2	0.08
6	3	0.2657	0.2657	0.2669	-12	-0.45
7	1	0.2632	0.2635	0.2631	1	0.04
7	2	0.2645	0.2640	0.2647	-2	-0.08
7	3	0.2645	0.2649	0.2643	2	0.08
8	1	0.2657	0.2657	0.2654	3	0.11
8	2	0.2654	0.2651	0.2650	4	0.15
8	3	0.2655	0.2656	0.2664	-9	-0.34
9	1	0.2665	0.2664	0.2661	4	0.15
9	2	0.2669	0.2671	0.2673	-4	-0.15
9	3	0.2668	0.2669	0.2680	-12	-0.45
11	1	0.2643	0.2641	0.2640	3	0.11
11	2	0.2639	0.2636	0.2637	2	0.08
11	3	0.2645	0.2644	0.2642	3	0.11
13	1	0.2667	0.2660	0.2664	3	0.11
13	2	0.2658	0.2660	0.2648	10	0.38
13	3	0.2663	0.2660	0.2656	7	0.26
15	1	0.2654	0.2650	0.2651	3	0.11
15	2	0.2644	0.2644	0.2636	8	0.30
15	3	0.2652	0.2650	0.2643	9	0.34
17	1	0.2653	0.2648	0.2643	10	0.38
17	2	0.2634	0.2631	0.2629	5	0.19
17	3	0.2651	0.2648	0.2646	5	0.19
19	1	0.2674	0.2674	0.2664	10	0.37
19	2	0.2672	0.2671	0.2664	8	0.30
19	3	0.2668	0.2665	0.2673	-5	-0.19

Table 4. Experimental results for Incoloy 800H (drum 2)

Location	Replication	Thickness readings No. 4	No. 5	No. 6	Difference R4-R6 (X10E4)	Percent difference
1	1	0.2681	0.2667	0.2661	20	0.75
1	2	0.2675	0.2661	0.2653	22	0.82
1	3	0.2664	0.2652	0.2650	14	0.53
2	1	0.2676	0.2666	0.2656	20	0.75
2	2	0.2656	0.2640	0.2637	19	0.72
2	3	0.2647	0.2640	0.2635	12	0.45
3	1	0.2678	0.2676	0.2663	15	0.56
3	2	0.2667	0.2655	0.2644	23	0.86
3	3	0.2671	0.2667	0.2661	10	0.37
4	1	0.2670	0.2663	0.2661	9	0.34
4	2	0.2648	0.2630	0.2627	21	0.79
4	3	0.2650	0.2645	0.2632	18	0.68
5	1	0.2679	0.2674	0.2667	12	0.45
5	2	0.2654	0.2640	0.2641	13	0.49
5	3	0.2616	0.2615	0.2622	-6	-0.23
6	1	0.2659	0.2647	0.2662	-3	-0.11
6	2	0.2668	0.2660	0.2649	19	0.71
6	3	0.2653	0.2642	0.2641	12	0.45
7	1	0.2673	0.2665	0.2650	23	0.86
7	2	0.2667	0.2655	0.2651	16	0.60
7	3	0.2674	0.2668	0.2670	4	0.15
8	1	0.2681	0.2674	0.2663	18	0.67
8	2	0.2688	0.2678	0.2677	11	0.41
8	3	0.2684	0.2676	0.2676	8	0.30
9	1	0.2689	0.2678	0.2681	8	0.30
9	2	0.2689	0.2670	0.2679	10	0.37
9	3	0.2690	0.2677	0.2677	13	0.48
11	1	0.2667	0.2667	0.2653	14	0.52
11	2	0.2671	0.2658	0.2652	19	0.71
11	3	0.2670	0.2656	0.2658	12	0.45
13	1	0.2689	0.2680	0.2671	18	0.67
13	2	0.2677	0.2660	0.2659	18	0.67
13	3	0.2694	0.2678	0.2671	23	0.85
15	1	0.2687	0.2675	0.2669	18	0.67
15	2	0.2681	0.2675	0.2672	9	0.34
15	3	0.2666	0.2669	0.2671	-5	-0.19
17	1	0.2676	0.2680	0.2666	10	0.37
17	2	0.2659	0.2650	0.2646	13	0.49
17	3	0.2674	0.2660	0.2659	15	0.56
19	1	0.2681	0.2683	0.2665	16	0.60
19	2	0.2689	0.2678	0.2678	11	0.41
19	3	0.2690	0.2680	0.2676	14	0.52

ORNL DWG 80-6986

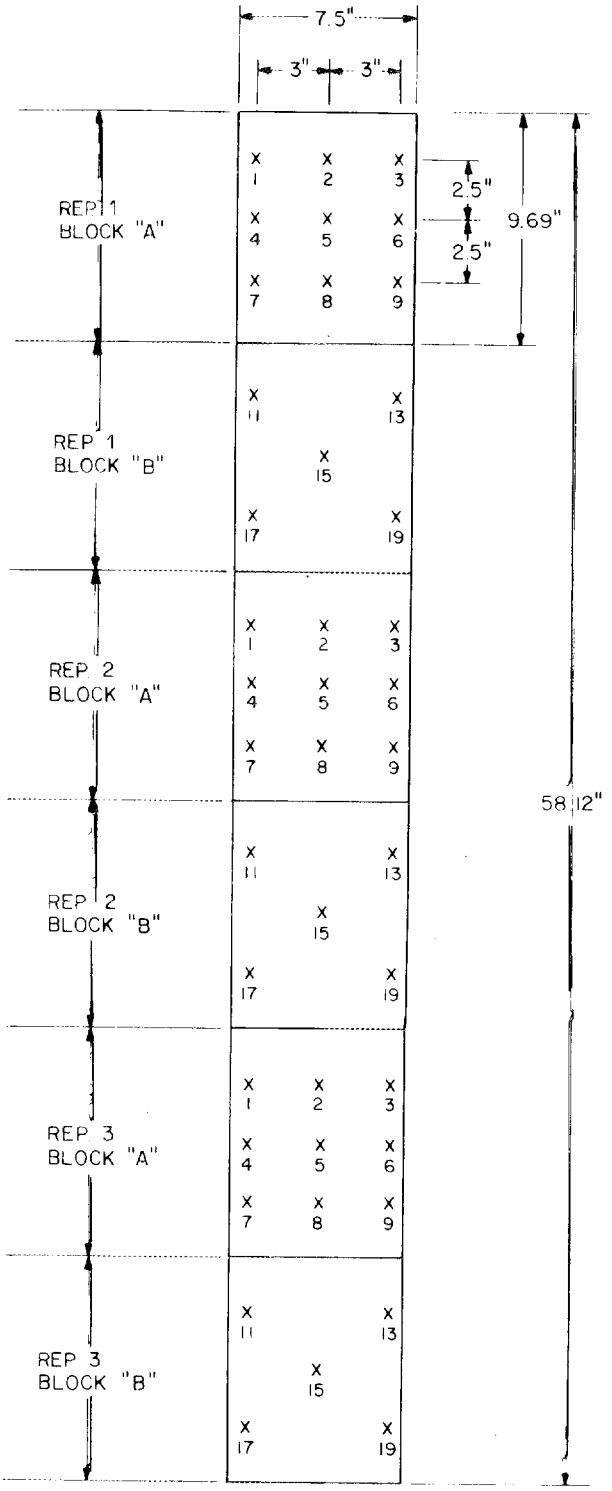

Fig. 2. Thickness measurement sampling point locations.

surfaces. The differences are scaled by 10^4 so that a difference of 10 corresponds to a change of 0.001 in. Positive differences indicate a measured thickness decrease, and negative differences indicate a measured increase in thickness at a particular point.

The test results are obviously scattered, and it is believed more appropriate to treat the data for each test surface as a group rather than to place much emphasis on measurements at a particular point. Consequently, mean thickness changes were calculated for each surface, and the variance about the mean was also determined. In addition, a frequency chart was constructed showing the distribution of the 42 thickness differences measured on each surface. This chart is presented in Fig. 3.

As may be seen in Tables 1 through 4, several of the differences are negative, which indicates an apparent thickness increase. This effect might be attributable to a lack of precision of the thickness measuring instrument, which is believed to be about ±0.0005 in. Also, a fine layer of powdered solid adhered to the test surfaces, a fact that may have caused some problems with the measurements.

A striking difference in results may be seen considering the average thickness changes obtained for drum 1 and drum 2. These average values are presented in Table 5.

The measured thickness changes on drum 2 are much larger than the corresponding values for drum 1. This fact cannot be explained because both drums were treated identically during the test program.

In addition to considering overall average thickness changes, an attempt was made to detect any effects of sample point location on the wear rates. The test points were grouped according to location or type (i.e., next to wall, next to lifter blade, center of the test surface, etc.), and changes in thickness for these groups were examined and compared. There was no detectable difference in the thickness measurements found, which could be attributable to sample point location on the test surface.

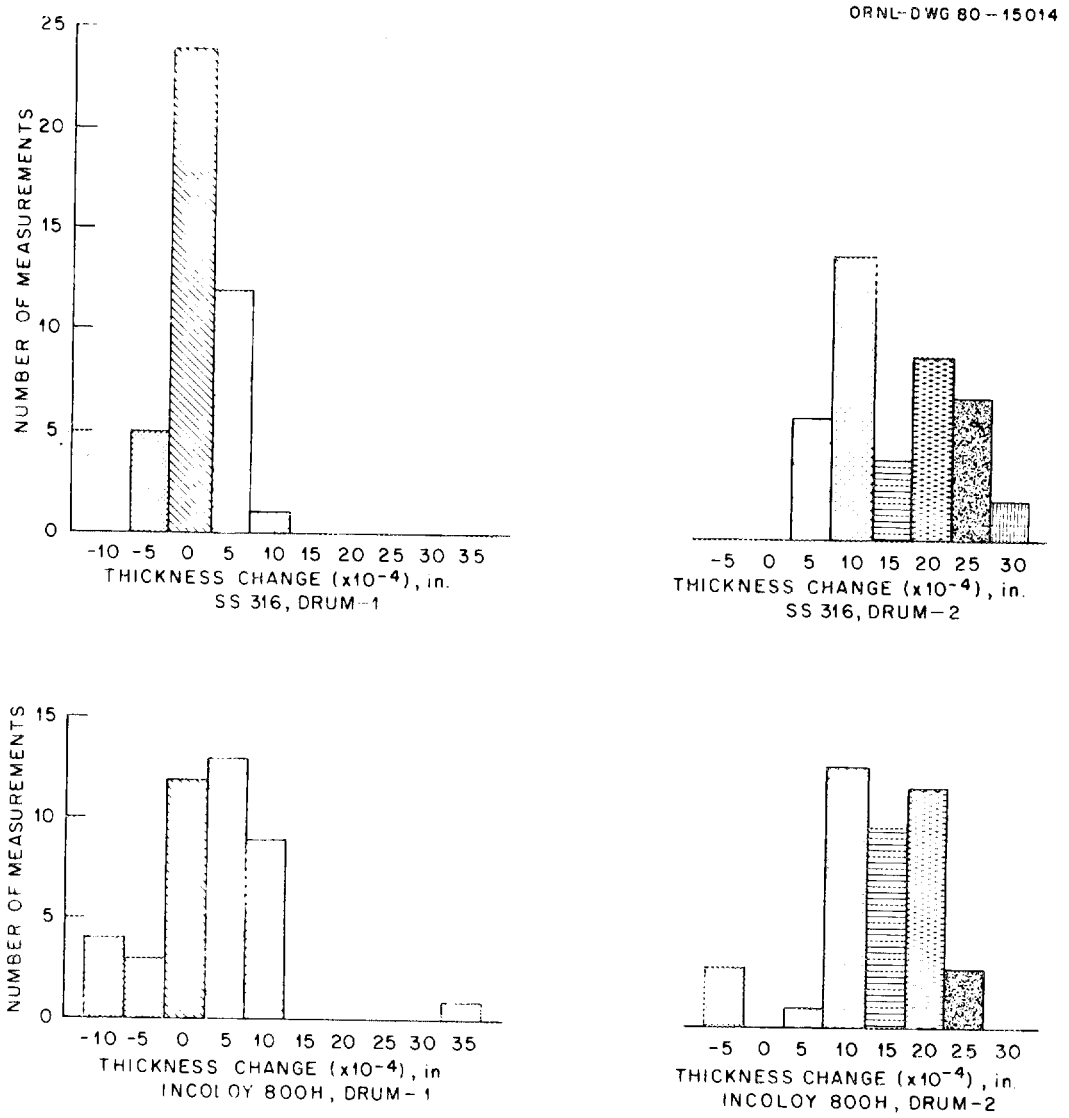

Fig. 3. Frequency chart of thickness measurements.

Table 5. Measured average thickness changes

Drum	Material	Mean difference (in.)	Standard deviation (in.)	Number of data points
1	316 SS	1.05×10^{-4}	3.56×10^{-4}	42
1	Incoloy 800H	2.12×10^{-4}	5.84×10^{-4}	41[a]
2	316 SS	14.98×10^{-4}	7.58×10^{-4}	42
2	Incoloy 800H	13.48×10^{-4}	6.88×10^{-4}	42

[a]Extremely high reading at location 6 replication 1 was omitted.

4. CONCLUSIONS

It is believed that the results of the preliminary tests cannot be used to exclude either of the materials tested for consideration as a material of construction for a voloxidizer. One set of tests (drum 1) showed essentially no significant wear during the test period of 156 d. The other test (drum 2) showed both materials decreasing in thickness by approximately 1-1/2 mils during a similar test. While no explanation is available for the differences between the two test sets, in each case type 316 SS and Incoloy 800H behaved similarly.

Further testing of these materials at more realistic conditions is warranted before a decision can be made regarding the applicability of these materials for voloxidizer use. Plans are underway to conduct such tests.

In the new test series, the drums are to be redesigned so that one drum contains two type 316 SS test surfaces and the other contains two Incoloy 800H test surfaces. Each drum will be located in a separate oven. The main purpose of the new tests will be to expose the surfaces to an environment more closely simulating that of an operational voloxidizer.

The present test setup is believed to have been deficient because the gas composition within the test drums was uncontrolled. In all probability, the testing was conducted in an oxygen deficient atmosphere. The new tests are designed to correct this condition by daily adjustments of the composition of the gas in the test drums. The gas flowing to the

drums will be blended to provide the compositions of oxygen, water vapor, and iodine that are expected to be present during actual voloxidizer operation. The last component, iodine, was not present in these first series of tests, and water vapor was present only in the ambient air.

DISTRIBUTION

1. E. J. Allen
2. W. J. Armento
3. W. B. Arthur
4. S. M. Babcock
5. W. W. Ballard
6. R. Blumberg
7. B. J. Bolfing
8. G. L. Borsheim
9. B. F. Bottenfield
10. E. C. Bradley
11–15. W. D. Burch
16. J. A. Carter
17. E. D. Collins
18. D. A. Costanzo
19. R. M. Counce
20. A. B. Crawford
21. D. J. Crouse
22. J. H. Devan
23. D. E. Dunning
24. W. E. Eldridge
25. W. W. Evans
26. M. J. Feldman
27. D. E. Ferguson
28. J. Garin
29. E. H. Gift
30. N. R. Grant
31. J. C. Griess
32. W. S. Groenier
33. G. L. Haag
34. P. A. Haas
35. M. J. Haire
36. D. C. Hampson
37. F. E. Harrington
38. H. W. Harvey
39. T. L. Hebble
40. J. N. Herndon
41. J. M. Hoegler
42. D. W. Holladay
43. J. M. Holladay
44–45. W. D. Holland
46. S. J. Hurrell
47. R. D. Hurt
48. R. A. Jacobus
49. R. T. Jubin
50. M. V. Keigan
51. J. B. Kendall
52. H. T. Herr
53. J. Q. Kirkman
54. C. H. LaMaster
55. C. E. Lamb
56. B. E. Lewis
57. D. K. Little
58. D. K. Lorenzo
59. J. C. Mailen
60. J. L. Marley
61. J. D. McGaugh
62. S. A. Meacham
63. J. F. Mincey
64. J. G. Morgan
65. E. L. Nicholson
66. R. E. Norman
67. E. D. North
68. A. L. Olson
69. W. H. Pechin
70. F. L. Peishel
71. R. L. Philippone, DOE
72. R. H. Powell
73. R. T. Primm
74. B. E. Prince
75. D. J. Pruett
76. D. P. Reid
77. H. H. Ross
78. A. D. Ryon
79. W. F. Schaffer, Jr.
80. M. B. Sears
81. J. H. Shaffer
82. S. L. Shrock
83. G. E. Smith
84. B. B. Spencer
85. M. J. Stephenson
86. J. R. Stokely
87. J. G. Stradley
88. D. W. Swindle, Jr.
89. D. B. Trauger
90. W. E. Unger
91. J. E. Van Cleve, Jr.
92. V. C. A. Vaughen
93. J. W. Wachter
94. F. E. Weber
95. B. S. Weil
96. T. D. Welch
97. M. E. Whatley
98. D. W. Williams
99. R. G. Wymer
100. O. O. Yarbro
101–103. Laboratory Records
104. Laboratory Records, ORNL-RC
105. ORNL Patent Office
106. Nuclear Safety Information Center