MARTIN MARIETTA ENERGY SYSTEMS LIBRARIES

3 4456 0250528 8

ORNL-5711

ornl

OAK
RIDGE
NATIONAL
LABORATORY

UNION
CARBIDE

The Bold Venture Computation System for Nuclear Reactor Core Analysis, Version III

D. R. Vondy
T. B. Fowler
G. W. Cunningham III

OAK RIDGE NATIONAL LABORATORY
CENTRAL RESEARCH LIBRARY
CIRCULATION SECTION
4500N ROOM 175
LIBRARY LOAN COPY
DO NOT TRANSFER TO ANOTHER PERSON
If you wish someone else to see this report, send in name with report and the library will arrange a loan.
CN-7969 3-9-77

OPERATED BY
UNION CARBIDE CORPORATION
FOR THE UNITED STATES
DEPARTMENT OF ENERGY

Printed in the United States of America. Available from
National Technical Information Service
U.S. Department of Commerce
5285 Port Royal Road, Springfield, Virginia 22161
NTIS price codes—Printed Copy: A15 Microfiche A01

This report was prepared as an account of work sponsored by an agency of the United States Government. Neither the United States Government nor any agency thereof, nor any of their employees, makes any warranty, express or implied, or assumes any legal liability or responsibility for the accuracy, completeness, or usefulness of any information, apparatus, product, or process disclosed, or represents that its use would not infringe privately owned rights. Reference herein to any specific commercial product, process, or service by trade name, trademark, manufacturer, or otherwise, does not necessarily constitute or imply its endorsement, recommendation, or favoring by the United States Government or any agency thereof. The views and opinions of authors expressed herein do not necessarily state or reflect those of the United States Government or any agency thereof.

OAK RIDGE NATIONAL LABORATORY

OPERATED BY MARTIN MARIETTA ENERGY SYSTEMS, INC.

POST OFFICE BOX X
OAK RIDGE, TENNESSEE 37831

December 30, 1985

TO: BOLD VENTURE Computation System User Distribution (holders of report ORNL-5711)

FROM: D. R. Vondy

SUBJECT: Difficulty Defining the Core Exposure Problem

DRVondy

The other day in a reactor history calculation, only about 1/10 of the amount of fuel consumption occurred that would be necessary for the desired power level. The chain equations were not properly solved, lacking an adequate description. Care is necessary to present complete, consistent, and unique specifications to the BOLD VENTURE system of codes. The neutronics problem description and the data in the file EXPOSE are used for the exposure calculation. In the case cited:

1. exposure data was presented on an absolute nuclide label basis,
2. a single nuclide name set was associated with all zones, and
3. several nuclides had the same absolute nuclide label but different microscopic cross sections.

The difficulty under discussion occurs with variation in the microscopic cross sections for a nuclide. Different data may be needed, as to account for variation in resonance shielding with position. Consider that three nuclides are actually each U-238 but with different microscopic cross sections. The BURNER code must have unique instructions for the exposure calculation. The specific nuclide produced by neutron capture in a nuclide must be made known.

Association is made between the nuclide concentrations and the nuclear data: the multigroup microscopic cross sections, the energy per fission, and the exposure data including the decay constants and the actinide and fission product chain parent-daughter relationships. The input data specifications involve:

<u>Nuclear name set</u>, a list of user nuclide names, an individual set is associated with specific zones (subzones) through the specified zone numbers (allows data blocking);

<u>User nuclide name = isotope label</u>, unique name in the cross section library (ISOTXS or GRUPXS) for referencing microscopic data, becomes an identifier of the nuclide atomic density for association with the data;

<u>Absolute nuclide labels</u>, secondary names carried in the cross section library for identification facilitating accounting, not unique; may be used in the specification of the exposure data.

Often only one set of microscopic cross sections is used for any nuclide at any location, and then separate nuclide name sets can be assigned to blocks of zones, each set containing nuclides with unique absolute nuclide labels. The assignment of more than one nuclide name set to blocks of zones is illustrated in the sample problem in the BURNER code report, page 06-10, ORNL-5180, and also in the "Super Sample Problem," page 90, report ORNL-5711. With more than one version of the same nuclide at any location, the exposure data specifications (explicit chain relationships) must be described by user nuclide names, and this takes considerable input data.

There is no caution in the documenting reports that addresses this difficulty. Current practice should be reviewed, and independent user input data checking is recommended for a high level of reliability. Comments about this difficulty might be added to any user input data instructions in use. Experience has shown that an adequate block of exposure data is difficult to prepare prompting the use of data already proofed and also careful checking of any new data set that has not been used. Exposure data testing is available in the BURNER code on option, but this is not the default to avoid unproductive processing in usual core history calculations involving many exposure steps.

DRV:nc

INTERNAL DISTRIBUTION

L. S. Abbott
B. L. Broadhead
D. G. Cacuci
R. L. Childs
P. W. Dickson (consultant)
J. D. Drischler
G. F. Flanagan
W. E. Ford
U. Gat
G. H. Golub (consultant)
N. M. Greene
J. C. Kouts
R. A. Lillie
W. B. Loewenstein
J. M. Lucius
R. E. Maerker
F. C. Maienschein
B. F. Maskewitz
D. L. Moses
R. W. Peele
L. M. Petrie
R. T. Primm
W. A. Rhoades
R. T. Santoro
D. L. Selby
C. O. Slater
D. Steiner (consultant)
R. M. Stinnett
J. S. Tang
C. C. Webster
C. R. Weisbin
R. M. Westfall
J. R. White
G. E. Whitesides
R. Wilson
B. Worley
RSIC
Central Research Library
Laboratory Records
Y-12 Technical Library
  Document Reference Section
ORNL Patent Office
EPD Reports Office

EXTERNAL DISTRIBUTION

Director, Division of Reactor Research and Development, DOE, Washington, D.C. 20545

EPD Reactor Computer Code Distribution

Office of Assistant Manager for Energy Research & Development, DOE-ORO

Director, Reactor Division, DOE-ORO

Distribution as shown in TID-4500, Distribution Category UC-79d - Breeder Reactor Physics (Base)

ORNL-5711
Distribution Category
UC-79d-LMFBR Physics

Contract No.W-7405-eng-26

Engineering Physics Division

THE BOLD VENTURE COMPUTATION SYSTEM FOR NUCLEAR REACTOR CORE ANALYSIS, VERSION III

D. R. Vondy
T. B. Fowler
G. W. Cunningham III*

Date Published: June 1981

This Work Performed for
United States
Department of Energy
Office of
Reactor Research & Technology

*Computer Sciences Divison of the Nuclear Division of Union Carbide

OAK RIDGE NATIONAL LABORATORY
Oak Ridge, Tennessee 37830
operated by
UNION CARBIDE CORPORATION
for the
DEPARTMENT OF ENERGY

MARTIN MARIETTA ENERGY SYSTEMS LIBRARIES

3 4456 0250528 8

Manuscript Typed by Patricia Boit

CONTENTS

PAGE

ABSTRACT vi
I. INTRODUCTION. 1
II. SOME APPLICATION CONSIDERATIONS 2
A. CONSISTENCY 3
B. ACCURACY 4
C. BLACK BOXES 4
D. NEUTRONICS. 4
E. EXPOSURE. 5
III. COMPUTATION SYSTEM. 6
IV. CONTROL MODULE. 8
V. INTERFACE DATA FILES. 14
A. FILES REQUIRED BY THE MODULES 14
B. THE FILE 'CONTRL' 16
C. STANDARD FILES 17
D. NEWLY DEFINED FILES 17
E. FILE VERSION NUMBERS. 17
F. COMMENTS ABOUT THE FILES. 20
VI. INPUT DATA PROCESSOR. 22
A. FILE AND RECORD CONTROL CARDS 26
1. File Control Cards - nVFILEID 26
2. Record Type Control Cards - mD. 27
3. STOP Card 27
4. FLAG Card 27
B. DATA FIELDS 28
1. Allowable Data Forms. 28
a. Numeric Words 28
b. Hollerith Words 29
2. Card Structure. 30
3. Control Options 30
a. Repeat Option 30
b. Skip Option 31
c. Interpolation Option. 31
d. Section Repeat Option 31

contents (con't)

PAGE

C. COMMENTS 32
VII. FILE EDITOR 33
VIII. SPECIAL PROCESSORS 33
A. DVENTR 36
B. DCRSPR 61
C. DUTLIN 66
D. DCMACR 67
E. DENMAN 68
F. DMISLY 72
IX. JOB CONTROL INSTRUCTIONS 76
A. THE CATALOG PROCEDURE. 76
B. USER SUPPLIED JOB CONTROL INSTRUCTIONS 76
C. PROBLEM DEPENDENT DATA FILE PARAMETERS 82
X. SUPER SAMPLE PROBLEM 84
XI. RECENT EXTENSIONS. 128
A. VENTURE NEUTRONICS, VERSION III. 128
1. The Uncommon Reactor Core Neutronics Problem . . 128
2. Space-energy Rebalance 131
3. Other Extensions 133
4. Equilibrium Xenon. 135
B. PERTUBAT PERTURBATION ANALYSIS 135
C. TEMPERATURE CORRELATION. 137
D. SPECIAL MODULES 137
REFERENCES 138
APPENDIX A A-1
APPENDIX B B-1
APPENDIX C C-1

LIST OF FIGURES

Figure		Page
1.	Components of the Computation System	7
2.	User Input Instructions to the Control Module	9
3.	Interface Data Files Required	14
4.	Files Which Can be Generated by the Input Processor	24
5.	The Catalog Procedure	78
6.	User Supplied Job Control Instructions	81
7.	Determining the Values of L, N, and B	83
8.	Cross Section Through Core Assemblies	85
9.	Zone Placement	86
10.	Transmutation Scheme	87
11.	Module Accesses and Results	88
12.	Input For Super Sample Problem	90
13.	Selected Output From Super Sample Problem	103
14.	Eigenvalue Separation for the Dominant Harmonics	130
A.1.	Input For VENTURE Storage Requirements	A-2
A.2.	Edit for Sample Calculation-VENTURE Storage Requirements	A-4
A.3.	Input For BURNER Storage Requirements	A-7
A.4.	Edit For Sample Calculation-BURNER Storage Requirements	A-10
B.1.	JCL Required to Create the System	B-2
C.1.	Interface File CONTRL	C-2
C.2.	Correspondence of Data: DVENTR-DTNINS	C-51
C.3.	Standard Files	C-53
C.4.	Newly Defined Files	C-101

ABSTRACT

This report is a condensed documentation for VERSION III of the BOLD VENTURE COMPUTATION SYSTEM for nuclear reactor core analysis. An experienced analyst should be able to use this system routinely for solving problems by referring to this document. Individual reports must be referenced for details. This report covers basic input instructions and describes recent extensions to the modules as well as to the interface data file specifications. Some application considerations are discussed and an elaborate sample problem is used as an instruction aid. Instructions for creating the system on IBM computers are also given.

I. INTRODUCTION

The BOLD VENTURE COMPUTATION SYSTEM[a] for nuclear reactor core analysis is a modular system in which individual modules are accessed in a desired sequence by a CONTROL module. Each module reads interface data files which may have been written by other modules in the system, or supplied externally to the run. Except for the input data processor and special modules, no input data are read from cards. The input data processor reads free form card input in a one-to-one correspondence with the interface data file specifications and writes the files in binary form for use by the other modules. Special modules read fixed form card input data for direct use or to create additional files.

Individual reports documenting the modules[1-8] and the system have been published. With continuing extension of the modules to enhance the capability has come the need to extend the interface data file specifications. We have found increasing need for a compact set of user input data instructions and interface data file specifications. Basic data requirements are collected here for this computation system.

We do run the risk of inconsistencies with duplicate publication. The reader is to assume that the document having the most recent date is accurate and supersedes any earlier publication. We expect never to hear the end of any discrepancy that may have crept through.

The following sections address some of the application requirements, present input data requirements, define the interface data file contents, address control, show an elaborate sample problem, and describe recent extensions. Data storage requirements for the VENTURE neutronics and BURNER exposure codes are discussed in Appendix A. Creation of a computation system from compiled routines on an IBM or equivalent computer is discussed in Appendix B.

---

[a]This system of codes was previously referred to as VENTURE (versions I and II). The VENTURE neutronics module is but one of the many modules which comprise the system.

II. SOME APPLICATION CONSIDERATIONS

The experienced analyst needs no special instructions for application in a familiar area. The novice is beyond help. We try here to help the experienced user by pointing out certain requirements. That may not be obvious if the application is in a new area. We recommend that the novice be allowed or be instructed to solve a large number and wide variety of simple and inexpensive problems to gain familiarization.

If a high level of reliability is to be placed in calculated results, then attention must be paid to the following aspects: is the

1. Physical theory adequate
2. Mathematical representation of the theory adequate
3. Error associated with numerical approximations and discretizations acceptable
4. Modeling adequate
5. Problem description defining the intended problem
6. Problem solved the one intended
7. Data transmitted and processed properly
8. Proper selection made from among paralleled procedures
9. Error associated with termination of iterative procedures acceptable
10. Result realistic

We believe that the codes in this system can be used to produce results that have a high level of reliability. The system members have been subjected to extensive verification tests. Still this does not ensure either that they are entirely error free, especially when auxiliary results are produced, or that the user instructions may not be misinterpreted. You will be using that verison of each code having the highest available level of quality assurance, along with others in the user community, not some other version.

The codes in this system individually and collectively have been qualified for nuclear reactor core analysis over a broad range of application. Still large voids can generally not be modeled

accurately with diffusion theory, and if you tell the exposure code not to consume U^{235} fuel, it won't and the results will not be correct.

The large amount of freedom allowed in describing core analysis problems was deemed necessary in the local environment of broad application. The result is a tremendous amount of capability. However, the impact on the analyst is quite severe. It is essential in a specific area of application for the user(s) to establish viable decks of input data. Special attention must be paid to the geometric description, to the coupled nuclide chain descriptions, to everything. Quite generally a viable data deck must evolve that is known to produce reliable results. It applies the proper boundary conditions, assigns materials correctly, describes such aspects as depletion and fuel management accurately, etc. Key results may be adjusted by bias factors developed from a comparison of calculated results with experimental results.

And then there is the cross section data. We note that expertise in this area comes only from experience. No advice is offered here deliberately to avoid creating the impression that the difficulties are less than they really are.

A. CONSISTENCY

To some extent many of these codes are forced to be consistent. They use and interpret most of the input data the same way. A notable exception is the correlation of microscopic cross sections on local temperature that must be specified in each of the instructions to the individual codes and is not available in the perturbation code (except in a macroscopic sense).

The continuous fueling model assumes that the fuel moves from zone n to n + 1 starting with n = 1, and subzone m to m + 1 starting with m = 1. Obviously a problem could be described that was physically impossible.

The available thermal hydraulics model assumes coolant flow along increasing mesh number ($j = 1$ at top to $j = J_{max}$ at bottom). A vertical traverse of the reactor might go up or down without altering the neutronics, but the top and the bottom might be incorrectly reversed for the thermal hydraulics, their locations depending on the direction of coolant flow, down or up.

B. ACCURACY

Quite generally the accuracy of a calculation has been carefully considered and factored into the development of these codes. Double precision arithmetic (rather than IBM half-precision) has been used extensively to avoid serious loss of significance, not everywhere and not in basic data interfacing, but in iterative and series calculations where hexadecimal rounding to less than six digit decimal accuracy can be serious.

The user is advised to heed warnings about reliability and become familiar with the available reliability tests and especially the implications of reported estimates of absolute accuracy. A part of the cost of a computer run is devoted to reliability testing that can not be avoided by the user, so he should see that this investment pays dividends.

C. BLACK BOXES

The major computer codes in this system must be used as black boxes. The FORTRAN listings are available, but the task of familiarization with the complicated procedures is so formidable that it could not be undertaken lightly. So the codes must be used without a detailed understanding of the contents. This does not free the user from the essential responsibility of satisfying himself that a reliable solution was obtained to the problem he intended to solve.

D. NEUTRONICS

There is the strange belief in the industry that the value of k_{eff} may be determined for a reactor core within at least 0.5 percent.

The fact is that the result of any calculation will be a value

$$0 < k_{eff} \leq \max \frac{\nu \Sigma_f}{\Sigma_a} ,$$

where usual properties are indicated. Many data errors have been eliminated because it is expected that $k_{eff} \simeq 1$. Effort within a project must narrow down any discrepancy to an acceptable level. Only by careful and systematic analysis can the requirements for accurate analysis be established. There is no way that code developers can determine that the data presented is garbage. Oh, a reflected boundary condition at $r = 0$ may be required for the radial coordinate, but for the axial coordinate the appropriate boundaries may be extrapolated or reflected or a combination, and if a combination they may be improperly reversed.

It is not uncommon to find that a nuclide density or other datum as specified is in error by a factor of 10. How crucial are the exponents of input data! Cross sections are often in error by orders of magnitude. We recommend independent checking, and it should be a requirement when high reliability is needed.

In solving the usual core neutronics problem we generally use only equations and procedures that produce positive neutron flux values. This avoids the serious uncertainty associated with the results when some flux values are negative. For the unusual core neutronics problems that involve negative flux values, reliability of a solution is not so easy to test and a greater burden falls on the analyst in proving that the results are reliable.

E. EXPOSURE

The user is reminded that only the descriptions specified will be treated. If the iron is to be consumed and the transmutation products followed, then these nuclide chains must be described and the necessary data such as the (n, γ) capture cross section be made available.

Consider that Np^{237} is a product of U^{237} decay, and U^{237} is generated by U^{236} capture and the (n, 2n) reaction in U^{238}. Quite generally the full set of contributing nuclides is not treated in core exposure calculations, usually only those that have significant reactivity effects plus any specific transmutation products of interest. We don't usually treat 1,000 fission product nuclides in 100,000 locations, but more likely 20 nuclides involving pseudo representations in perhaps 1,000 locations. Considerable data processing is required ahead of multi-dimensional analysis to constrain the computational costs to within reason. The capability for such processing may not be entirely adequate and essential compromises reduce the reliability of end results.

III. COMPUTATION SYSTEM

Components of the computational system are shown in Figure 1. The system includes a driver program which is resident in computer memory, a control module, an input data processor, a file editor, computational modules, and special modules that don't completely satisfy the system requirements for full membership. When the control module is first accessed by the driver, it reads input data as shown in Figure 2. Thereafter, the control module instructs the driver to access one or more modules in order before it re-accesses the control module for more instructions. Full control always returns to the control module.

None of the full member computational modules read input data. They read pre-defined interface data files that were written by other modules or made available from outside of the system. The input data processor reads free form card input in a one-to-one correspondence with the interface file specifications and writes binary files for use by the other modules. The special processors DVENTR, DCRSPR, DUTLIN, DMISLY, and DENMAN read fixed format card input data and write certain of the interface data files for use by the modules;[a] these may be used

---

[a] Any of the interface files can be produced directly with the input data processor, but in most cases these special modules read data in more straight forward manner and produce the needed interface files.

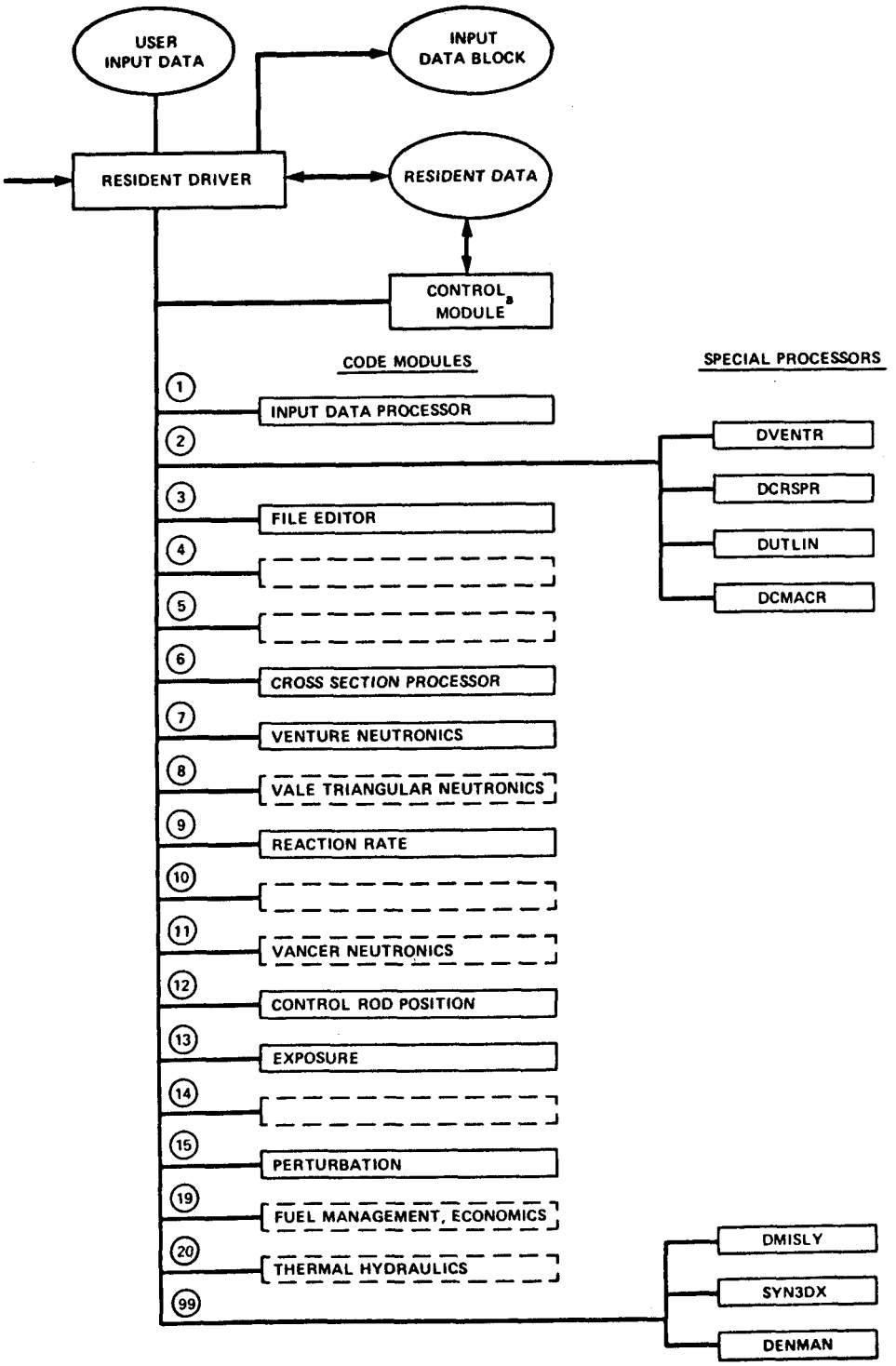

Figure 1. Components of the Computation System

initially before any calculation is done and may also used during a calculation to modify the data or instructions between executions of computational modules.

The input data stream must contain a block of data for the input data processor each time it is called. Likewise each time one of the special processors (2 or 99 in the path instructions) is called, a block of data must be available for use. Each block of input data requires a special header card and a terminating END card. A look-ahead capability is incorporated in the control module procedure that causes termination if a readable block of input data is not available for the next requirement. Thus, there must be consistency between the ordered input data and the module execution path list. If a special processor is included in the nest of a repeating loop, then as many input data blocks must be supplied for it as there are entries in the expanded table. Note that an input data block defines the special processor to be executed by its header record. Those accessed by path entry 2 are fundamentally different from those accessed by path entry 99 because the former are high QA modules using confidential address names.

If the user is to add his own module(s) (with concatenation) to this system (path entry 99), special care must be exercised to protect the interface data files and any data files supplied if they are to be viable after executing the new module. The use of separate data sets for such special modules with concatenation is essential to insure high QA of the system. Anyone messing around with the data set containing these codes can expect to become a non-user, perhaps flying at half mast in the vicinity.

IV. CONTROL MODULE

The control module "CONTROL1" performs certain initialization and wrap up tasks and carries out the role of directing the resident driver to execute the code modules along a path predescribed by input data. Input instructions are shown in Figure 2.

Figure 2. User Input Instructions to Control Module 'CONTROL1'

Card Number	Columns (Format)	Reference Name	Typical Entry	Use
1	1	-	=	Precedes control module name
1	2-9	-	CONTROL1	Control module name
2	(12A6)	TITLE		The run title card
3	1-6	IP1	090000	Primary memory allocation for data (040000)[α]
3	7-12	IP2	0	Reserved
3	13-18	IP3	0	Reserved
3	19-24	IP4	0	Override data block size for direct access files (4-byte words)
3	25-30	IP5	10	Processor time allowed to be used before wrap-up procedures are executed by the control module (min); must be less than allowed in the job control instructions, if > 0
3	31-36	IP6	50	Ditto 1000 Input/Output requests if > 0
3	37-42	IP7		Additional input is included to present interface data file information, if > 0
3	43-48	IP8		A module number. Data files will be saved after each access of module numbered | IP8 | (see footnote "h"
3	49-54	IP9		Reserved
3	55-57	IP10	0	
3	58-60	IP11	0	

Figure 2 (con't)

Card Number	Columns (Format)	Reference Name	Typical Entry	Use
3	61-63	IP12	1	Initial interface data file table initialization option 0 - Use SEEK default table (sets up 15 including CONTRL as the first)[b] >0 - Set up this many from the list of which CONTRL is the first
3	64-66	IP13	0	Option on reinitialization of interface data file tables for any subsequent access of the input processor after the first 0 - No action (leave as is) >0 - Retain this many (plus CONTRL)
3	67-69	IP14	0	Edit level for control module, primarily for debugging if > 0
3	70-72	IP15[c]	0	Primary termination options 0 - No action 1 - Save data files only upon successful completion before termination, per instructions 2 - Save data files as possible before termination only if the first code module access completed successfully, per instructions
4	(24I3)	IM(I)		String of integers presenting the code module numbers to define the calculational path, terminating with a blank entry, limited to 900 entries. These numbers and the corresponding modules are shown in Fig. 1. Any member special processor is accessed by the number 2 or others added in local application by 99. A loop over a substring of two or more code modules is defined by a negative entry which is the number of

Figure 2 (con't)

Card Number	Columns (Format)	Reference Name	Typical Entry	Use
				previous entries included in the loop and the next entry is the number of passes through the loop; additional accesses may be specified in the path after these two entries which define the loop. Note that user input data must normally be processed requiring that the input processor or a special processor or both be accessed. Prior to accessing a code module. A loop may contain as the first module the input processor or a special processor to describe a basic multiple case run. Care must be taken in the arrangement of the user input data to satisfy input processor and special processor requirements consistent with these instructions and under restrictions defined elsewhere.

(Note: Input to the control module ends here unless IP7 > 0)

5+	(9(2x,A6))	H(I)		This is a string of interface data file names presented in sets (sub-strings) of names for five different purposes. Termination of each set of names is with a blank 8 column field or an entry 'X' in the last column of a separating 8 column field, limited to 72 entries (8 cards). Purposes of each of the sets is as follows:

Set[d]	Use
1	Names of files made available to be used as supplied from a previous run (normally on disk), reference data added to the data file management tables before any other action is taken.

Figure 2 (con't)

Card Number	Columns (Format)	Reference Name	Typical Entry	Use
				2[e] Names of files to be retrieved from the stacked files made available on a user data set, done before any module access, extends the data file management tables.
				3[f] Names of existing files (after any retrieval) for which copies are to be made, thus creating new and therefore multiple versions, with the copies becoming the latest version available for use.
				4[g] Names of files to be stacked on a user stack data set at wrap-up time at the end of a run, generally requires successful completion and wrap-up by the control module.
				5[h] Names of files to be stacked on a user stack data set after each access of the module numbered | IP8 | .
(next	(A3)	-	END	Normal data block terminator card required

(The user input data stream continues with data as required in order of access of modules requiring input data; generally each block of data requires a header card and a terminator END card).

---

[a]Non-zero default values shown for entry of zero.

[b]These files are CONTRL(10), GRUPXS(11), GEODST(12), NDXSRF(13), ZNATDN(14), SEARCH(15), RSTRTR(16), RTFLUX(17), ATFLUX(18), RZFLUX(19), PWDINT(20), CXSPRR(30), ISOTXS(31), ISOTXS(32), and FIXSRC(33), where the numbers in parenthesis are the logical unit numbers assigned to the files.

[c]Not implemented in the early version.

Footnotes (con't)

[d]Note: For the first two sets of file names, IP12 should usually be 1; assignment of unit numbers is in increasing order starting with the first set beginning with unit 11 (unit 11-20, then 30-39, then 70+).

[e]A user stack data set may be either a disk partitioned data set (PDS) or a tape. Data definition (DD) cards describing the stack data sets must be supplied having special ddnames. These special ddnames may be READSTKA, RITESTKA, READSTKB, and RITESTKB. The data control block (DCB) parameter of the DD cards should not be included.

The stack data set from which files are to be retrieved must have the special ddname READSTKA or READSTKB, and must contain all files listed. Retrieval of only one version of a file will be of the first file appearing on the data set having that name, and it will become the latest version for the run (unless a copy is made by additional instructions). If a file name appears more than once in the list, then more than one version is to be retrieved and all versions requested must exist on the stack data set. If the stack data set to be read has the ddname READSTKA, it is assumed that the first appearance of a particular file on the data set is to be the latest version for this run, the second appearance of that file the next-to-latest version, etc. (see footnote "g"), and the file versions will be set up in that order for the run. If the stack data set to be read has the ddname READSTKB, then it is assumed that the first appearance of a particular file on the data set is to be the oldest verison, the second appearance of that file the next-to-oldest version, and the last appearance the version (see footnote "h"), and file versions will be set up in that order for the run.

Provision has been made for retrieving a particular file. If the 2X field of the list contains an I2 integer N, then the Nth appearance of that file name (not version number) is retrieved. Care should be exercised in specifying the order of appearance of files to be retrieved (from READSTKA or READSTKB) to effect the desired version number association for the run. For retrieving files from a user stack data set, the DCB parameters for the I/O units that will be written must be the same as the DCB parameters of the I/O units from which the files were saved on the user stack data set.

[f]Files listed here (latest version only) will be written on and then read from the stack data set having the special ddname RITESTKA if defined in the job control language (JCL), thus destroying any files that existed on this file. If this data set is not defined, then the data set with the ddname READSTKA will be used. Repeating a name causes another version of the same file to become available, etc.

[g]Files listed here will be written on the stack data set with ddname RITESTKA if it is defined, or READSTKA if not (see "[f]" above about destroying existing files). If a file name appears more than once in the list, a different version of the file must exist for each appearance of

Footnotes (con't)

that name. The latest version of the file will be written first, the next-to-latest version written next, etc. For later retrieval of files from this data set, it must be redefined as READSTKA to preserve the correct ordering of version numbers.

[h] Files listed here (latest version only) will be written on the stack data set having ddname RITESTKB if it is defined, or READSTKB if not. If this data set is a disk PDS, the disposition parameter of the DD card must not be DISP=NEW (the data set should have previously been created). If IP8>0, this data set will be re-written after each access of the module numbered IP8 destroying the files previously written. If IP8<0, the files will be stacked one after the other, saving all files. Note that in this case, the oldest version of the files is written first, the next-oldest version written second, etc., and the latest version written last. This is in the reverse order to the way files are written at wrap-up. For later retrieval of files from this data set, it must be re-defined as READSTKB to preserve the correct ordering of version numbers.

V. INTERFACE DATA FILES

A. FILES REQUIRED BY THE MODULES

Figure 3 shows the files required by the modules in the computation system. These files are listed in Appendix C. The file CONTRL is unique in that it contains global information about an entire run and one record of control instructions that is read by each computational module. The association between the name of this record and the module is shown in the figure. The special processors DVENTR, DCRSPR, and DUTLIN write a record on the CONTRL file (see SPECIAL PROCESSORS below).

Figure 3. Interface Data Files Required

Module	Number	Name of Record in File CONTRL	Required	Required on Option	Written on Option	Reference
CONTROL		PROINS DVRINS		(Any)	(Any)	1
INPUT PROCESSOR	1			(Any)	(Any)	1,8
FILE EDITOR	3		FPRINT	(Any)		1,8

Figure 3. (con't)

Module	Number	Name as Record in File CONTRL	Required	Required on Option	Written on Option	Reference
CROSS SECTION PROCESSOR	6	XCPINS	CSXPRR ISOTXS	GRUPXS	GRUPXS ISOTXS	2
VENTURE NEUTRONICS	7	DTNINS	GEODST NDXSRF ZNATDN GRUPXS	RTFLUX ATFLUX RZFLUX FIXSRC RSTRTR SEARCH ZNTEMP	RTFLUX[a] ATFLUX RZFLUX FIXSRC RSTRTR PWDINT PERTUB FISSOR ZNPOWD GEODST	2
VALE NEUTRONICS	8	Sames as VENTURE except TRIGOM is required instead of GEODST				10
REACTION RATE	9	RRTINS	NDXSRF ZNATDN GRUPXS RZFLUX	GEODST[b] TRIGOM[b] ZNTEMP PERTUB		2
CONTROL ROD POSITIONING	12	RODINS	RODSET GEODST NDXSRF ZNATDN YNATDN[d]		ZNATDN[c] YNATDN	6
EXPOSURE	13	EXPINS	EXPOSE NDXSRF ZNATDN GRUPXS RZFLUX	PTATDN ZNTEMP GEODST[b] TRIGOM[b] EXPOHT CFHIST RTFLUX	PTATDN QNATDN ZNATDN ZNPOWD EXPOHT[a] CFHIST[a]	3
PERTURBATION	15	PERINS	GEODST NDXSRF ZNATDN GRUPXS	PERTUB RTFLUX ATFLUX ZNTEMP DLAYXS[b]	PERTUB	5
FUEL MANAGEMENT and ECONOMICS	19	REFINS	REFUEL NDXSRF ZNATDN	MASBAL FNATDN QNATDN	MASBAL	11

Figure 3 (con't)

Module	Number	Name as Record in File CONTRL	Required	Required an Option	Written an Option	Reference
THERMAL HYDRAULICS	20	PBLINS				12
DVENTR	2	DTNINS			GEODST[c] NDXSRF[c] ZNATDN[c] SEARCH	4
DCRSPR	2	XCPINS			CXSPRR[c]	4
DUTLIN	2	(Any)				4
DCMACR	2					4
DMISLY	99			RTFLUX ATFLUX GEODST	RTFLUX ATFLUX GEODST	4
DENMAN	99			NDXSRF ZNATDN QNATDN	NDXSRF ZNATDN SEARCH	4

[a]May be created if it does not exist

[b]Will be used if it exists

[c]Always written

[d]Will be created if it does not exist

B. THE FILE 'CONTRL'

Figure C.1 describes the file 'CONTRL' with global information records and a record of information for each computational module. Each true member computational module reads its record of instructions from this file each time it is accessed and many of them also use the global data. Revised instructions may be supplied using the special processor DUTLIN at any predetermined point along the calculational path (between module access).[a] Thus in solving the dominant harmonics problem, for example, it would be normal practice to instruct the

[a] This file is created initially by the control module and generally the individual records for the modules are added by the special input modules.

VENTURE neutronics module to solve the regular and adjoint problems for a reference state, and then provide revised instruction (via DUTLIN) for a second access of VENTURE to solve the dominant harmonic problem.

Figure C.2 presents a correspondence list of data from the VENTURE neutronics record DTNINS and the special processor DVENTR input sections 001 and 002 (see Section VIII below), which writes this record on CONTRL. Some of the data have not yet been defined leaving it available for future use.

C. STANDARD FILES

Figure C.3 lists the standard interface data files.[8] These are the files ISOTXS, GRUPXS, GEODST, NDXSRF, ZNATDN, RTFLUX, ATFLUX, RZFLUX, FIXSRC, SEARCH, DLAYXS, PWDINT, CXSPRR, and FPRINT. The files RTFLUX, ATFLUX, RZFLUX, FIXSRC, and SEARCH have been altered as indicated by an asterisk dash (*-) at the end of the card.

D. NEWLY DEFINED FILES

The files that have been defined locally expanding the set are shown in Figure C.4. These are the files EXPOSE, EXPOHT, CFHIST, PTATDN, QNATDN, ZNTEMP, ZNPOWD, PERTUB, FISSOR, RODSET, RSTRTR, REFULE, TRIGOM, MASBAL, and REFUEL. Not listed are the files XNATDN, YNATDN, and FNATDN which are identical to ZNATDN except for the file names.

E. FILE VERSION NUMBERS

Clarification is offered here about interface data file version numbers as seen by the file management system. At the start of execution, the file management records are all initialized at zero version numbers. If a file is supplied (and the system is informed about this via the control module instructions), it becomes version 1 regardless of what is written on the file. If two versions are supplied, they are assigned version numbers 1 and 2 in the increasing order of the logical unit number. Note that these logical unit numbers are arbitrarily assigned in increasing order starting from the

largest known number reserved. The actual numbers must be consistent with what will be assigned. If a file is generated by a special Input Data Processor before any calculations are made, it normally is version 1; however, if N files were supplied and this is known to the Control Module, writing another one creates version N (replacing the Nth one supplied), except where special provision has been made otherwise and the option is exercised to generate a new N + 1 version. Such is not possible with most of the special Input Data Processors, as they generally destroy the latest version of any file (if it exists). To supply one and create yet another version with a special Input Data Processor would require supplying two initially, and the second could be a dummy, but it must contain the correct file name. The Control Module must be told there are two, and it checks for agreement with names in the files as a quality assurance step, and then the second one would be rewritten by the special Input Data Processor. (Here the copying capability within the Control Module is especially useful to create extra copies.) The two files would then be versions 1 and 2, version 1 being the first one supplied having the lowest version number. Note that only files which become assigned logical unit numbers for which special job control instructions are provided for the computer run can be made available from a previous calculation (or by special generation), and then these will be available at the end of the run. Often the original data file supplied or initially generated will be written over, destroying the initial contents. Such action by the codes in this system is necessary to avoid uncontrolled proliferation when global problems are solved involving the generation of many files, often many versions of a file having a common name.

Most of the codes in this system read the latest version (version having the highest version number assigned in the internal file management tables) of any file. The next-to-latest version may be read on demand by user option in some cases, especially where two versions are required for a calculation, but this can be done only if the latest version N and the next to latest version N-1 exist and are so labeled

in the file management tables. Special importance may be attached to a version 1 file as initial state, i. e. the nuclide concentrations, and this version may be used at a later point in the calculation. In some instances a copy is made of a file and it is assigned a new identification name to allow recovery of data at a later point in a calculation.

Consider a file used to interface data during a calculation. The first file will be version 1. A second file with the same name may be version 2 if written on a different unit, but usually it will be written over the first file leaving only a version 1 file in the set and in the file management tables.

The default option for writing most files in most of the computation Modules in this code system is to write over the existing latest version. Special Processors with few exceptions write over the existing file without increasing the version number. The user is referred to specific documentation.

When the neutronics code does a criticality search on nuclide density, it always leaves intact the available latest version N and writes a new version N+1 of the nuclide concentrations file, ZNATDN. If only one file existed, there now become two versions N and N+1. If there were more than one in the system, the version N-1 is deleted and the new file version N+1 is written leaving versions N+1 and N, and any lower version numbers existing. The new version N+1 would be located where the old N-1 was if it existed, unless a unit with a lower logical number in the set reserved for interface file is available (not revised). If a dimension search is done, new versions of both the geometry file GEODST and the nuclide concentration, cross section referencing file NDXSRF are always written on new logical units, extending the contents of the file management tables while preserving the original data.

The following actions are taken by the control rod positioning RODMOD code. For the reference data, YNATDN generation by request always produces a version N+1 given an existing latest version N, and deletion deletes version N. File ZNATDN generation always produces a version N given an existing latest version N. File GEODST generation always produces a version N+1.

F. COMMENTS ABOUT THE FILES

The following comments are offered about the data contents of specific interface data files regarding file processing and data use.

ISOTXS

1) NSBLOK - the scattering blocking factor must be evenly divisible into NGROUP.
2) JBAND - the scattering band width must be greater than 0.
3) IJJ - the scattering in-group term must fall within the band. Combinations of JBAND and IJJ which cause fictituous transfers for a given group are not allowed.
4) LTRN - must be greater than 0 and ≤MAXORD + 1.
5) LTOT - must be greater than 0 and ≤MAXORD + 1 for the P_1 calculation.
6) Group-to-group fission spectra are not allowed.

GRUPXS

1) NSBLOK - the scattering blocking factor must be evenly divisible into NISO.
2) JBAND - same as ISOTXS.
3) IJJ - same as ISOTXS.
4) Group-to-group fission spectra are not allowed.
5) The total scattering arrays must be present.

GEODST

1) IGOM - the following geometries are not implemented
   0 - point.
   11 - Rθ
   12 - RθZ
   13 - Rθα
   16 - θRα
   Triagonal geometry options assume equilateral triangles.
   Hexagonal geometry options assume regular hexagons.
2) Boundary indicators for repeating conditions.
   IMB1 = 3 first boundary of dimension 1 may repeat with second boundary of dimension 1.

IMB2 = 4 second boundary of dimension 1 may repeat with second boundary of dimension 2 (XY,XYZ,T,TZ only - mesh must be consistent for rotation).

IMB2 = 5 second boundary of dimension 1 may repeat with itself inverted (XY,XYZ,T,TZ only - mesh must be consistent for rotation).

3) Boundary constants

Default constants:

0.4692 for extrapolated and internal.

1.0 + 30 for zero flux.

0.0 for reflected.

If boundary constants are supplied, no check is made to assure consistency with boundary indicators.

4) NTRIAG - triagonal geometry options 2, 3, and 4 are not implemented.

5) VOLR - the region volumes are not required except for use in the reaction rate module.

NDXSRF

1) NON, HNNAME, HANAME and NCLN must be the same as NISO, HISONM, HABSID and KBR, respectively, on GRUPXS.

2) NZONE - must be the same as NZONE on GEODST.

3) VOLZ - the zone volumes are not required except for use in the reaction rate module. However, a case having subzones must have both the zone volumes and subzone volumes defined.

4) ATWT - is not used, atomic weights are always obtained from GRUPXS.

ZNATDN

1) NTZSZ - must be the same as NZONE + NXZ on NDXSRF.

2) NBLKAD - the density blocking factor must be evenly divisible into NTZSZ.

SEARCH

1) For concentration searches - nuclide names in search data not appearing in GRUPXS (NDXSRF) or are not assigned to the zone(s) specified will be eliminated from the calculation.

2) For dimension searches - NCINTI, NCINTJ, and NCINTK must have the same values as the same parameters on GEODST.

FIXSRC

1) Distributed sources for IDIST.EQ.1 and NDCOMP.GT.1 will cause termination.
2) Surface sources capability has not been used.

VI. INPUT DATA PROCESSOR

The input data processor in this system was developed at LASL[8] to produce interface data files directly from user input. It has been modified locally for use on an IBM computer and to extend its capability. Additional work on it is anticipated to produce data files from user input instructions oriented toward requirements for typical problems with de-emphasis on the actual interface data file characteristics. Additional capability continues to be incorporated to produce new files needed by new code modules. The input processor is referred to in some circles as the 'standard user input processor'.

The following general comments are offered on the user input data:

1. Input for the control module must come first,
2. Requirements of the special processors must be met within the constraints of their actions and the actions of the input processor when it is used,
3. Care must be exercised to satisfy the requirements of the computational code modules, so that desired actions are taken regarding the reference tables of the interface data files and assigned logical unit numbers,
4. A header card must precede the block of input data for the input processor; an identifying note may be put on this card since the contents are not used for control.

Quite generally it is assumed that special processors use the file management tables to determine the logical unit numbers associated with the file names and generate the files without altering

these tables, except to add new files. Thus they play the game fairly. However, it is probable that some which don't will come into use, and their use must be carefully restricted. Any specific special processor can be used for some function, but a code module may carry out its assigned task after this point only if the actions taken allow continued communication of consistent data about the interface data files. Generally it is possible to use a special processor at the start of a run or at the end of a run successfully. Special processors are identified by the header record (see SPECIAL PROCESSORS below) of a block of data in the user input data file and access of a special processor is indicated by the number 2 in the calculational path presented to the control module; successive entries to special processors may be required in a path description. It may be practical to use the input processor after initial use of one or more of those special processors which generate interface data files from user input.[a]

The input processor is summoned at each point in the calculational path where reference is made to module 1. As implemented, the input processor generates data files as follows with a OV flag in front of the file name:

1. If the file is in the tables, the unit number associated with the latest version number is written destroying its old contents.
2. If the file name is not in the table, it is added and associated with the next higher unit number in the allowed set, and the new file is written.
3. If a file by this name was already generated in this access to the input processor, a new one and an associated next higher version number are added to the table, and a new file is written.

A 99V flag in front of the file name forces a new file to be created as a special option implemented locally.

---

[a] For example DVENTR (see SPECIAL PROCESSORS below) might be used to create the files NDXSRF, ZNATDN, and the file GEODST with simple (slab) geometry. Then the input processor may be used to create a new GEODST with the desired geometry, i.e. trangular-Z, which in some cases is easier to generate using the input processor than using DEVNTR.

The input processor has the capability to update an existing file, useful capability not extensively tested locally. Care must be taken to count REAL*8 words as double entries, as when A6 names are involved, on short word machines. We consider that simple changes are possible, but complicated changes, as for data records in a loop structure, require special consideration; there are rather severe limitations such as the fact that record lengths cannot be changed. Thus we generally recommend against updating with new data lacking explicit description of the constraints, or only with careful testing prior to costly calculations.

A general discussion about the user input data requirements for the input processor to emphasize user considerations, is presented below. Example use of the input processor is shown under Super Sample Problem. A list of the files which can now be generated is given in Figure 4.

Figure 4. Files Which Can be Generated By the Input Processor

File Name	Description	Capability Tested	Edit Capability
ISOTXS	Nuclide-ordered cross sections	x	x
DLAYXS	Delayed neutron data	x	x
BRKOXS	Bondarenko data		x
GRUPXS	Group-ordered cross sections	x	x
ISOGXS	Gamma reaction, transport data		x
GEODST	Geometry description	x	x
TRIGOM	Geometry description (mesh edge triangles)	x	No
NDXSRF	Nuclide referencing	x	x
ZNATDN	Nuclide concentrations	x	x
SEARCH	Criticality search data	x	x
SNCONS	S_n cosines, quadratures		x
FIXSRC	Fixed source	x	x

Figure 4 (con't)

File Name	Description	Capability Tested	Edit Capability
RTFLUX	Regular total point flux	x	x
ATFLUX	Adjoint total point flux	x	x
RAFLUX	Regular angular flux		x
AAFLUX	Adjoint angular flux		x
RZFLUX	Regular total zone flux	x	x
RCURNT	Regular current		x
ACURNT	Adjoint current		x
PWDINT	Point power density		x
CONTRL	Computation module control records	x	x
CXSPRR	Cross section processing data	x	x
PERTUB	Forward, adjoint integrals	x	x
FISSOR	Fission source	x	x
EXPOSE	Exposure data	x	No
ZCONCA	Local nuclide concentrations	x	No
RODSET	Control rod positioning data	x	No
FPRINT	File editor instructions	x	No
ZNTEMP	Zone temperatures	x	No
ZNPOWD	Zone power density	x	No
EXPOHT	Exposure history	x	No
PTATDN	Point nuclide concentrations	x	No
REFUEL	Fuel Management Specifications	x	No

The primary function of the input processor is to create interface files entirely from card input. The data can be read directly from cards as free-format data blocked by file record. Interface file specifications are the input specifications.

The card format specifications define rules for entering data on cards. The card format is free form in the sense that data items may be entered freely on a card without regard to card columns. However, certain rules for ordering data into groups and entering data on cards are specified.

The card format has two distinct categories for entries on a card. These are (a) the file and record control words, and (b) the datum field for the actual data items to be loaded into a given array. The rules governing usage of these entries are given below.

A. FILE AND RECORD CONTROL CARDS FOR INPUT PROCESSOR

There are four types of control cards governing the input of data which are addressed in the following discussion.

1. File Control Cards - nV FILEID

The unsigned integer n immediately followed by the character V denotes that version n of the file named FILEID is to be overlaid by the data on the cards that follow the nV card. If n=0 the file FILEID is to be created entirely from the cards that follow, destroying an old file if one exists. If n is 99, a new file is created. Data or comments following nV FILEID on the file control card are ignored. When the data for two files having the same name are supplied in a block, each with a 0V control field, an existing old file (the latest version) will always be rewritten with the first set of data and second set creates the new file with a next higher version number.

A file control card is the first card read by the processor. Processing of the named file continues until a new file control card or a STOP card (see below) is encountered. Any number of files may be processed in any order.

As currently implemented, when n=0, the latest version of the file, if known by the file management system to exist, will be rewritten; otherwise a new file will be created with a version number one higher than the highest number found, version one if there is no entry of that name in the tables. When the overlay option (n greater than 0) is used, the old file is purged and is not available for further use, and the new file has the version number of the old one, but it is placed on a new logical unit.

2. Record Type Control Card - mD

An unsigned integer immediately followed by the alphabetic character "D" denotes a "Data" card. The first word on a card following a file control card must be an mD. Thereafter, if a card is encountered without the first word being an identifier, then the last read identifier is used. The data on this card may be integer, floating point, Hollerith, etc., with any mixture being possible, but the actual requirements set out in the data specificaitons for the specific file must be satisfied.

The mD are associated with the record types appearing in the interface file specifications. Each unique data list in the specifications is assigned a specific record type. The record types are numbered consecutively beginning with the first record following the file identification record. Data for the file identification record are supplied on the file identifier card, identifying the record type of the data following. If the list for record type m is repeated in the file, mD must precede each repetition of the list. In overlay applications the defined ordering of records is followed; records to be left intact may be skipped as desired. Skipped records are copied unmodified from the reference file onto the new file. For the overlay option, any parameter that controls the length or number of records in the file may not be changed.

3. STOP Card

Input processing is terminated when a card containing STOP as the first entry is encountered.

4. FLAG Card

This is a new option card that can be used to change the normal input unit number and/or control the card image printout. Cards of the form

FLAG IUNIT IPRINT ISTART IEND

can be inserted anywhere in the input stream (preferably before OV cards). FLAG is a keyword identifying the special instructions to the processor. IUNIT, IPRINT, ISTART, and IEND are integers. IUNIT

identifies a secondary unit from which the input processor will immediately begin processing. Processing on the secondary unit continues until a STOP card (no additional cards will be processed) or end-of-file (processing will then revert to the normal input unit) is encountered. A zero value for IUNIT instructs the processor to continue on the normal input unit. IPRINT controls card image printing. If IPRINT is zero, all card images will be printed. If IPRINT is one, no card images will be printed. If IPRINT is two, only the cards between and including the nubmers specified by ISTART and IEND will be printed. For example, the card

```
FLAG  90  2  1  4000
```

specifies that card images will be read from logical unit 90 and that only cards 1 through 4000 will be printed.

B. DATA FIELDS

The data field contains words which may be data along with control parameters and allowed comments. This section describes the allowable data forms, the structure of data entries and the various control options available to simplify data entries.

1. Allowable Data Forms

The allowable data forms are integers, single precision floating point numbers, and Hollerith words. Any combination of these forms is allowed within the data field. For files containing double precision numbers, each number is first constructed in single precision on a short word machine and then converted to a double word for the file. When the overlay option is used, a double precision number is converted to single precision before overlay occurs. After the overlay, reconversion is done to double precision for the file. Card input specifications determine the allowable combinations of data forms.

a. Numeric Words. Numeric entries are integers if they contain no decimal point or exponent. Otherwise, numerics are taken to be real (floating-point) numbers. An exponent is an expression containing an optionally signed integer preceded optionally by the letter E.

The sign or the E may be absent but not both. An exponent in a numeric word must always be preceded by at least one digit, otherwise, forms En or E+n delimited by blanks or commas are interpreted as Hollerith words. To allow data written by the computer to be read, a blank after the E is treated as a plus sign. Also, a D (not the same as mD) will be treated as if it were an E. Examples of allowed forms are:

Numeric	Equivalent Value	Type
10	10	Integer
-10	-10	Integer
1E1	10.	Real
1+1	10.	Real
-1.0E+01	-10.	Real
1.0E 01	10.	Real
1.00D 01	10.	Real

b. Hollerith Words. Hollerith data are specified in three different ways:

1. by enclosing the data in asterisks,
2. by using the nH specifications, or
3. by beginning a single word entry, containing no more than six characters, with a letter.

In all cases, Hollerith data are stored at the rate of six characters per word. On IBM machines each six-character word is stored in a double precision word. Input words of less than six characters are stored left adjusted with blank fill. Imbedded blanks in words are allowed only on options (1) and (2); in option (3) blanks delimit words.

For example, the following are all equivalent:

```
*U238A * *PU239B* *IRON  *
*U238A PU239BIRON  *
16HU238A PU239BIRON
U238A PU239B IRON
```

The requirements for a 12-word (72-character) title may easily be satisfied by putting an asterisk (*) in columns 1 and 72 and limiting the actual title to columns 2 through 71.

It is recommended that Hollerith always be delimted using the asterisk notation. In any event, if the Hollerith includes the character D in any position of the word or the character E in the last position of a word, the Hollerith must be delimted for proper interpretation.

Note: FILEID, STOP, and FLAG must never be delimmited. For example:

OV ISOTXS is correct

OV *ISOTXS* is incorrect.

2. Card Structure

The card field has no fixed structure except that data items must be separated by blanks (or a comma, not recommended), and a single datum item may not be split between two cards. The data field on a card may be terminated by a slash (/) after which comments may be supplied on that card. The trailing comments, however, will appear in the listing, since all card images are printed, but will not be included in the data file.

Comments enclosed in dollar signs ($)

$COMMENT$

may also be inserted freely between datum entries. Except for listing the card images, such comments are ignored by the processor. The initial $ terminates an immediately preceding data entry.

Card fields for data entries are limited to 72 columns.

3. Control Options

Control options available in the data field are repeat, skip, interpolation, and section repeat.

a. Repeat Option. The repeat option is an unsigned integer immediately followed by the letter "R". Use of this option permits repeating the previously entered data item an integer number of times. The specification nR means n total entries of the previous entry, for example

1 2R = 1 1, and

2.0 3R = 2.0 2.0 2.0

b. Skip Option. The skip option is an unsigned integer immediately followed by the letter "S". This means that the integer number of locations will be skipped when determining the index of a value to be loaded. The skip option is applicable only in overlay applications. Skipping one Hollerith word must be counted as 2 single precision positions having format A6. For example:

1 10R 5S 2 10R = The integer 1 is stored into ten consecutive locations. Then 5 locations are skipped and the integer 2 is stored into the 16th through 25th locations.

c. Interpolation Option. The interpolate (nI) specification provides for linear interpolation between two REAL constants. The previously processed word is the initial end-point, n is the number of equally spaced points to be inserted between the initial and terminal end-points, and the terminal end-point follows the nI specification. Integer interpolation is not available. For example:

1.0 3I 5.0 = 1.0 2.0 3.0 4.0 5.0

d. Section Repeat Option. A section is a group of entries enclosed in parentheses. The entries may consist of numeric or Hollerith data; repeat, interpolate, and skip specifications; or section repeats. The section is always used in conjunction with the repeat option in the form

(entries) nR.

The entries are expanded to obtain n identical data sets.

The end of an interpolation section entry must lie within the section. The initial point may immediately precede the section, although this is seldom useful. The skip option as a section entry must be used cautiously since items skipped are taken from the array being overlayed and the overlayed array is the entity repeated in the section repeat operation. Sections may be continued over more than one card, and section repeats may be nested within section repeats up to 10 levels of nesting. An example of nesting is:

(1(5.0 2I 20.0) 2R WORD1) 2R

which is equivalent to

(1 5.0 10.0 15.0 20.0 5.0 10.0 15.0 20.0 WORD1) 2R.

When repeating a Hollerith word, the section repeat must be used. For example:

(*PU238B*) 2R.

C. COMMENTS

The following comments should be heeded:

1. A header card is required.
2. The standard input processor will only accept cards or card-images written in the EBCDIC character set. The following characters are different from the BCD characters:

   (is 12-5-8 punch

) is 11-5-8 punch

   + is 12-6-8 punch

   = is 6-8 punch
3. Interface file CONTRL is written initially by the driver. Local special processors which use data from the input stream add or replace records in this file (unless in a stand-alone mode). The standard processor will write a completely new file. All records on this file are designated 1D. The records may be in any order except as noted below:

PROINS	always first
DVRINS	always present
(others)	optional
* * or BLANK	always last, more than four characters required.

4. The block of data for the input processor is terminated with a card containing STOP and another card containing END.
5. As much of the input data block is processed as possible; any error causes abnormal termination at the end preventing continuing access of code modules and calculation as implemented.

VII. FILE EDITOR

The file editor was developed at LASL and modified extensively for local use. It may be used to print in card-image form the contents of interface data files, or to generate a file containing stacked interface data files, formatted for direct recovery by the input processor. The file editor requires instructions from the interface data file FPRINT when summoned in the calculational path, which must have previously been generated by the input processor. The contents of FPRINT describe the action to be taken by the file editor and were shown in Figure 6. A unit which is to be written for future reading by the input processor must have compatible job control instructions including formatted records of 80 byte length. Files which can be edited were shown in Figure 8.

The maximum record length which can be processed by the file editor is 30,000 short words (15,000 long words). Also, only 10 different record types are now allowed, limiting use in a few instances.

The instruction file FPRINT is deleted[a] from the file management table after use. Therefore a new file must be generated by use of the input processor and user input data for each access of the file editor. Of course, once a file is generated, it is available for use until it has been used and deleted.

When data is written on a file for recovery, writing begins at the start of the file and destroys the original contents.

An example of use of the file editor is shown in Section X. A sophisticated control module may use the file editor directly (by generating the required instructions in the file FPRINT without input data), but this is not now done by the control module CONTROL1.

VIII. SPECIAL PROCESSORS

Special processors are allowed in this computational system. All true system member processors are assigned the path access number 2 and each has a unique eight-character name associated with it (six characters ending with two blank characters allowing identification

---

[a] Now Optional - See FPRINT file specifications.

at the user level with six characters). Other special processors may be added which are assigned the path access number 99.

Additional special processors will be added with development effort and reliability testing to ensure proper performance in this system. The special processors named above are frozen members of the system and cannot be overriden by the user supplying his own modules with the names indicated.

Provision has been made to allow use of other special processors. Five additional special processor names have been designated and may be used. They are USERXA, USERXB, USERXC, USERXD, and USERXE. Future extension of these names is obvious. The special processor must be a module, previously loaded, assigned one of these names. At run time, the data set containing that module would be concatenated with the code system data set by overriding the //STEPLIB card in the catalog procedure.

For each special processor module referenced by path access number 2 or 99 in the computational path IM(I) Figure 2, the reference module name followed by any required input data must appear in the input stream, with an END card termination.

When all of the calculations specified on the computational path card have been completed, the user may execute any other modules outside the system that were previously loaded as desired by including cards with =NAME punched beginning in column 1, where NAME is the name of the module to be accessed. Care must be taken to access the necessary data files proper logical units; this may require that special action be taken for the run. Likely these logical units must be specified as input to the module, and input data requirements must be satisfied.

One or more special processors can be added to the system for local use. The module must be put in a data set with the eight-character name (six characters plus two blanks recommended) to be used for access (path access number 99).

Special care should be taken if one or more data sets are concatenated onto the set containing codes used routinely: do not destroy the production codes, as by improper disposition. All the data sets

used should be considered to be permanent (don't DELETE anything, thus avoiding accidental destruction of production codes). Avoid action which prevents quality assurance of the production codes. Make load modules in computer runs separate from runs using the production code.

The fixed format input data read by each of the special processors is described here. This is essentially the same information as given in reference 4.

Each block of user input data must start with a header card which identifies the special processor, and must terminate with an END card. No distinction is made between a zero and a blank field. Data elements are usually named herein, followed by fixed field columns of a keypunched input data card in parentheses. A non-zero default value is shown in [] after the discussion about the datum, overridden by non-zero input. Undefined data is reserved for future use. Some of the data is blocked into individual sections; except where indicated, data must be supplied for each section, and in the order of increasing section number.

A reasonable amount of error checking is done to identify evident user blunders and to effect abortion to avoid wasted calculation by return of a non-zero stop number. Still, unreasonable data may be supplied inadvertently, so careful checking of the edits from the codes and of the results is in order to avoid drawing incorrect conclusions in analysis.

A summary is presented below of the access names and path identification for the special processors covered and the names of the files generated. Files which are generated only on option have been shown in parentheses. Also shown are the names of records added to the file CONTRL; these are accessed by the computation modules for their control.

Processor Access Name	Access Path Module Number	Record Generated in file CONTRL	Files Generated
DVENTR	2	DTNINS	GEODST, NDXSRF, ZNATDN, (SEARCH)
DCRSPR	2	XCPINS	(CXSPRR)
DUTLIN	2	(optional)	-
DCMACR	2	-	See discussion
DENMAN	99	-	(ZNATDN),(QNATDN), (NDXSRF),(SEARCH)
DMISLY	99	-	RTFLUX, ATFLUX, GEODST

A. DVENTR

This code processes data to generate the essential files required by the VENTURE neutronics code. The files generated are consistent regarding the zone volumes which are calculated from the geometric mesh description and the nuclide cross section, concentration, and referencing tables. Reference data is accessed from the group ordered microscopic cross section file GRUPXS which must that it be available.

Header card: DVENTR in columns (1-6).

Section 001: General Control

Card 1: 001 in Columns 1-3.

Card 2: Control Data (6E12.0).

RXX1(1-12)

RXX2(13-24) Machine central processor time limit for any eigenvalue problem (min) if >0.

RXX3(25-36) If > 0, the restart I/O data file RSTRTR will be written (rewritten) every RXX3 minutes during the iterative calculation, and also at termination [0.0].

Unless noted, defaulting has been moved into VENTURE for this section of data.

RXX4(37-48) Power level (watts thermal). (Normalization of the flux is to source neutrons produced lacking energy generation data with the cross sections).

RXX5(49-60 Conversion factor, ratio of thermal energy to fission + capture energy as calculated from the data presented with the cross sections [1.0].

RXX6(61-72) Fraction of reactor considered, applied to the power level RXX4 (accounts for the actual geometry treating less than the whole core). RXX6 would be 1.0 in R-Z geometry if Z spanned the whole core, 0.5 if only half was treated; in X-Y geometry, this could be the reciprocal of the Z dimension. Considering unit dimensions in untreated coordinates, this is the volume actually treated divided by the actual core volume. Power generation in untreated regions requires special consideration.
Note that the flux level will be normalized to cause a fission + capture energy level of RXX4*RXX6/RXX5. (If RXX4 is perchance electrical energy, then RXX5 should contain the plant efficiency).

Card 3: Control Data, cont. (6E12.0).

RXX7(1-12)

RXX8(13-24) Chebyshev parameter μ_2 upper bound (overrides that calculated by the code).

RXX9(25-36) Chebyshev parameter μ_1 lower bound, usually zero, (overrides that calculated by the code).

RXX10(37-48) Specified overrelaxation coefficient (overrides automated procedure).

RXX11(49-60) Convergence criterion on integral quantities (K) on outer iterations [0.000005].

RXX12(61-72) Convergence criterion on local, point quantities (maximum relative flux change) [0.00005].

Card 4: Control Data cont. (6E12.0)

RXX13(1-12) Input Buckling to override that on the GEODST interface file.

RXX14(13-24)

RXX15(25-36)

RXX16(37-48) Search k_{eff} to be satisfied. Required if ICX2=4 or 5. May be used to override search k_{eff} on search interface if ICX2=1.

Card 5: Control Options (24I3).

ICX1(1-3) Transport theory approximation to be applied [1].

VENTURE - Mesh Centered Finite - Difference.

1 - Diffusion theory fundamental flux problem.

2 - P_1 approximation fundamental flux problem.

- 1 - Diffusion theory solution for the dominant allowed first harmonic (see Section XI) requiring the fundamental regular and adjoint flux files RTFLUX and ATFLUX. The first iterate source distribution will be skewed to excite all spacial flux harmonics so that the dominant one will surface

- 2 - Same as -1 but the first iterate source will not be skewed. Usually for this option the RTFLUX file must either be a uniform flux distribution (in which case the solution may or may not be for the dominant harmonic) or an initial estimate of the dominant harmonic flux distribution (for example, a cosine from -1 to +1 along a coordinate while perhaps uniform in other directions) that will cause the desired harmonic to surface. This may especially be useful to accelerate convergence when two of the spacial harmonic eigenvalues are nearly equal.

- 10 - Special dominant azimuthal harmonic solution only applicable for RZ geometry. The total loss term is adjusted to account for the azimuthal harmonic (a D/R loss contribution is added).

VALE - Mesh Edge Triangular Geometry.

1 - Diffusion theory fundamental flux problem.

-1 - Diffusion theory dominant harmonic flux problem.

-2 - Diffusion theory dominant harmonic but the first iterate source will not be skewed.

3 - Higher order approximation fundamental flux problem (see RXXN2 Section 002).

-3 - Higher order approximation dominant harmonic flux problem.

-4 - Higher order approximation dominant harmonic but the first iterate source will not be skewed.

ICX2(4-6) Type of problem.

0 - Determine k_{eff}.

1 - Search (requires search file be supplied, see ICX3).

2 - Fixed source (requires source file be supplied).

3 - Adjoint only (see ICX4 option to do the adjoint problem directly following a regular problem, which is generally recommended).

4 - B^2 search.

5 - 1/v search, prompt mode (requires velocity data in cross section file).

ICX3(7-9) Search data identifier, see section 028 which is required if ICX3 > 0, or if ICX2 = 1 and ICX3 $\geq$ 0

ICX4(10-12) Adjoint problem option.

0 - Not to be done.

1 - Adjoint eigenvalue problem.

2 - Adjoint fixed source problem (requires source file be supplied or generated).

ICX5(13-15) Flux initialization option.

0 - Automated procedure, (recommended unless a good guess is available).

-1 - Set all values equal.

1 - Make space-energy dependent.

2 - Use data from the latest version interface data file supplied.

3 - Use data from next-to-latest interface data file supplied.

ICX6(16-18)[a] Force data handling mode.

0 - Automated procedure, (recommended to minimize data input/output).

1 - Core contained.

2 - Space problem contained.

3 - One row contained.

4 - Multiple planes stored.

5 - Multiple rows stored.

6 - Multi-level transfer mode (special coding for a machine having a large slow extended memory).

ICX7(19-21) If > 0, a previously written restart data file, RSTRTR (which must be supplied), will be read to continue a calculation. This option continues the flux-eigenvalue calculation with no changes in the problem parameters such as overrelaxation coefficients, number of ineer iterations, etc. To restart a problem where changes are desired, use ICX5 option = 2 or 3 (see above).

ICX8(22-24) Extrapolation options on outer iterations.

0 - Automated procedure which may do either single error or double error mode extrapolation.

-1 - Single error mode using successive iterate flux sets.

1 - Single error mode using alternate iterate flux sets

2 - Extrapolation not allowed.

---

[a] A "-1" option has recently been added to allow the user to cause termination if the amount of memory allocated is insufficient for efficient execution (cannot store space problem in two-dimensions or enough planes to avoid excess data transfer in three-dimensions). Also see ICX11.

3 - Set to 0, but when single error mode extrapolation is done, successive iterate flux sets are used.

ICX9(25-27) Options for initialization procedure.

-2 - Do not solve a 1-D problem

-1 - Do not use results from a 1-D problem for inner iterative procedure data.

0 - Automated.

1 - No Chebyshev of overrelaxation coefficients on outer iterations.

2 - Fix the number of inner iterations.

3 - Fix the number of inner iterations, no Chebyshev.

4 - Fix overrelaxation factors and the number of inner iterations.

5 - Same as 4, but no Chebyshev.

6 - Same as 4, but do not use results from a 1-D problem.

7 - Same as 5, but do not use results from a 1-D problem.

ICX10(28-30) Recalculate overrelaxation coefficients and number of inner iterations at outer iteration number ICX10. (Leave blank and let the code decide this).

ICX11(31-33) Number of inner iterations, <u>leave blank and let the code decide this.</u> (For many fast reactor problems we find 4 inner iterations are near optimum without Chebyshev acceleration; however, for some problems the code automated procedure may be superior provided adequate memory is allocated for the inner iteration process to be done efficiently). For efficient data transfer for three-dimensional problems, we recommend that the container array size (see IP1 Figure 2) be large enough to store as many planes of data as the number of inner iterations.

ICX12(34-36) Maximum number of outer iterations. If set = 969, preliminary data processing from interface files is done to check data, storage requirements, etc., and no calculations are done unless ICX5 > 1 in which case the residues pass is made to calculate k-effective [50 in input processor].

ICX13(37-39)[a] Extrapolation not allowed before ICX13 outer iterations. If < 0, forced extrapolation is allowed.

ICX14(40-42) Outer iteration Chebyshev acceleration (flux) options.

<0 - Start at iteration number $|\text{ICX14}|$.

0 - Use automated procedure.

1 - Start after first extrapolation.

2 - Force after initial delay.

3 - Do not allow.

100 + N - Start at iteration N > 3 with forced extrapolation to obtain the L_1 norm eigenvalue.

ICX15(43-45) Options on mesh point sweep.

-1 - Force normal ordering.

0 - Automated procedure.

1 - ε_1 ordering when data handling procedures allow it.

ICX16(46-48) Plane (or row) number of a 3-D (or 2-D) problem which is to be run as a 2-D (or 1-D) problem.

ICX17(49-51) Options on k-effective calculation.

0 - Automated procedure.

1 - Calculate k-effective by the source ratio.

ICX18(52-54) Fission spectrum option.

0 - Apply set values.

1 - Determine zone-dependent data from data for the individual nuclides, often desirable for fast reactor problem.

ICX19(55-57) Fission spectrum normalization.

0 - Not to be done.

1 - Normalize individually to unity.

---

[a] Generally used for testing only.

ICX20(58-60)

ICX21(61-63) This order (1, 2, or 3) of the coordinate direction dependent cross section data in the library is to be used for the first dimension.

ICX22(64-66) Ditto, second dimension.

ICX23(67-69) Ditto, third dimension.

ICX24(70-72) Force data transfer of the region assignments in processing (only used to check procedures).

Card 6: Edit options and instruction to generate interface data files (24I3).

Note: Indicated action generally to be taken if the value is $\geq$ 0, no action if 0.

IXE1(1-3) Print overall neutron balance, highly recommended.

IXE2(4-6) Print neutron balance by zone (macroscopic composition).

IXE3(7-9) Print space-energy point flux values (recommended only when really essential).

IXE4(10-12) Print space point map of power density (not usually needed, especially when zone peaks are edited).

IXE5(13-15) Print power density traverse through peak along each coordinate.

IXE6(16-18) Print space point map of neutron density. This requires velocity data with the cross sections, and is useful only in some situations (d/v is 1/v response).

IXE7(19-21) Print neutron density traverse through peak along each coordinate.

IXE8(22-24) Print space-energy point adjoint flux values (when calculated). Seldom needed.

IXE9(25-27) Print zone average flux values by energy group (already available if the zone neutron balance is obtained by option IXE2); if >1, also print zone average adjoint flux values if the adjoint problem is solved.

IXE10(28-30) Print information about the iterative progress.

-1 - No

0,1 - One line of iteration edit per outer iteration.

2 - Also inner iteration data.

3 - Also more inner iteration data.

IXE11(31-33) Print principal macroscopic cross sections and other data, useful for checking data.

1 - Only macroscopic cross sections.

2 - Also boundary conditions and buckling, and overrelaxation coefficients.

3 - Also extensive information about initialization and recalculation of overrelaxation coefficients.

IXE12(34-36) Print scattering macroscopic cross sections.

IXE13(37-39) A plane number for which the zone and group bucklings are to be calculated.

IXE14(40-42) A second plane number for the buckling calculation.

IXE15(43-45) Write regular total flux interface data file RTFLUX.

1 - Replace old file; if none exists, create one.

2 - Write a new file.

IXE16(46-48) Write adjoint total flux (if calculated) interface data file ATFLUX.

1 - Replace old file; if none exists, create one.

2 - Write a new file.

IXE17(49-51) Write regular zone flux interface data file RZFLUX.

1 - Replace old file; if none exists, create one.

2 - Write a new file.

IXE18(52-54) Write power density interface data file PWDINT.

1 - Replace old file; if none exists, create one.

2 - Write a new file.

IXE19(55-57) Write fission source interface data file FISSOR.

1 - Replace old file; if none exists, create one.

2 - Write a new file.

IXE20(58-60) Print option when input data is processed.

1 - Edit interface data files NDXSRF and ZNATDN.

	2 - Also edit interface data file GEODST.
IXE21(61-63)	Additional print option when data is processed.
	-1 - No mesh point zone number edit.
	0 - Edit zone number at each mesh interval only after overlay input Section 006.
	1 - Edit zone number at each mesh interval after input Sections 005 and 006.
IXE22(64-66)[a]	Perturbation edits. Positive values for this number indicate that the neutronics regular-flux or adjoint-flux or both regular followed by adjoint calculations are to be run prior to the perturbation calculation to write the interface data files RTFLUX and ATFLUX which must be available for perturbation calculations. Negative values indicate that these two interface data files already exist and no neutronics calculation will be done.
	1 - Edit basic integrals.
	2 - Also edit transport integrals.
	3 - Also edit absorption cross-section space point importance map.
	4 - Also edit production and production-absorption cross-section space point importance maps.
	5 - Also edit 1/v space point importance map.
IXE23(67-69)	Write perturbation interface data file PERTUB (IXE22 not zero).
	1 - Replace old file; if none exists create one.
	2 - Write a new file.
IXE24(70-72)	Save results as formatted data (see Section 704, of the VENTURE report) at the end of a case.
	1 - Yes.
	2 - Also print this data.

[a]A new option 6 allows file PERTUB to be written with edit suppressed.

Section 002: Optional General Control

This section of input is optional.

Card 1: 002 in columns 1-3.

Card 2: Control options (24I3).

IXCN1(1-3)	Identifies secondary search data in the SEARCH interface file to be used if the constraints of the first set are not satisfied, and a second search is to be done (see SEARCH file specifications).
IXCN2(4-6)	
IXCN3(7-9)	Option for testing to prevent default of files to memory.
IXCN4(10-12)	Space-energy rebalance will be done occasionally if > 0.
IXCN5(13-15)	The number of blocks (left-right) for space-energy rebalance if > 0.
IXCN6(16-18)	The number of blocks (top-bottom) for space-energy rebalance if > 0.
IXCN7(19-21)	The number of blocks (fore-aft) for space-energy rebalance if > 0.
IXCN8(22-24)	
IXCN9(25-27)	
IXCN10(28-30)	Option to account for the dependence of the cross sections on the local temperature requires two GRUPXS cross section interface files, a ZNTEMP interface file, and reference temperatures (see RXXN7, RXXN8, and RXXN9 below). 0 - No. 1 - Yes.
IXCN11(31-33)	
IXCN12(34-36)	
IXCN13(37-39)	
IXCN14(40-42)	
IXCN15(43-45)	
IXCN16(46-48)	

IXCN17(49-51)
IXCN18(52-54)
IXCN19(55-57)
IXCN20(58-60)
IXCN21(61-63)
IXCN22(64-66)
IXCN23(67-69)
IXCN24(70-72)

Card 3: Control options (cont.)(24I3).

IXEN1(1-3) Calculate and edit perturbation results for a 100 percent change in macroscopic cross sections and uncertainty (sensitivity) information if IXE22 (Section 001) is not zero.

IXEN2(4-6) Option to write point flux values (used for auxiliary exposure calculations), if IXE17>0.

>0 - write flux data for this zone.

-1 - write data for only the point where the power density is a maximum for the initial neutronics problem.

-2 - write flux data for points in the zone where the power density is a maximum for the initial neutronics problem.

-3 - write flux data for the point where the first group flux is a maximum for the initial neutronics problem.

-4 - write flux data for the points in the zone where the first group flux is a maximum for the initial neutronics problem.

<-4 - write flux data for this mesh point count in the mesh.

IXEN3(7-9) A second zone number for the same purpose, only >0 allowed.

IXEN4(10-12) Option to calculate the conversion ratio adjoint importance fixed source and write a new interface file FIXSRC from the results of this forward eigenvalue problem: F(zone, group) = $\frac{\Sigma_c}{C} - \frac{\Sigma_a}{A}$ Σ_c is the fertile macroscopic capture cross section, Σ_a is the fuel macroscopic absorption cross section, and C and A are integrated fertile capture and fuel absorption (C/A = primitive conversion ratio). If < 0 write two fixed source files: $\frac{\Sigma_c}{C}$, and $\frac{\Sigma_a}{A}$.

IXEN5(13-15)

IXEN6(16-18)

IXEN7(19-21)

IXEN8(22-24) The maximum zone number for which the zone and group dependent diffusion coefficients will be changed by RXXN2 and RXXN3 below, if not zero.

IXEN9(25-27)

IXEN10(28-30) Option to calculate and edit the relative change in conversion ratio for a 100% change in the macroscopic fertile capture cross section and finite absorption.

IXEN11(31-33) Write an adjoint total flux file ATFLUX with the product of the regular and adjoint fluxes.

1 - Write over old file; if none exists create a new one.

2 - Write a new file version.

IXEN12(34-36) Write zone power density file ZNPOWD.

1 - Replace old file; if none exists, create one.

2 - Write a new file.

IXEN13(37-39) Write a point fixed source file as $DB^2\phi$.

1 - Replace old file; if none exists, create one.

2 - Write a new file.

IXEN14(40-42) Write the adjoint zone average flux file AZFLUX.

1 - Replace old file; if none exists, create one.

2 - Write a new file.

IXEN15(43-45) Option to calculate a point power density adjoint importance fixed source and write a new interface file FIXSRC. This file is by mesh point and group

$$FS(i,k) = \left[\frac{W(i,k)}{(PD)_N}\right]^* - \frac{W(i,k)}{P\ F}\ V(i)$$

where

i = mesh point index

k = energy group index

W = power per unit flux

$(PD)_N$ = power density at mesh point N

P = total power

F = fraction of core

V = volume

[]* zero except at point N

1 - N is the meshpoint where the power density is the peak

-M - N is the meshpoint in zone $|M|$ where the power density is the peak.

2 - N is the mesh point defined by IXEN16, IXEN17, and IXEN18 below.

IXEN16(46-48) Column number for IXEN15 = 2 (point number on a plane for VALE)

IXEN17(49-51) Row number for IXEN15 = 2 (set to 1 for VALE)

IXEN18(52-54) Plane number for IXEN15 = 2

IXEN19(55-57)

IXEN20(58-60) If > 0, this is the order number in the nuclide name set 1 of Section 013 of Xenon, and equilibrium Xenon will be accounted for in the flux calculation (see RXXN5 and RXXN12 below and Section XI).

IXEN21(61-63)

IXEN22(64-66)

IXEN23(67-69)

IXEN24(70-72)

Card 4: Control options (cont.) (24I3).

IXNU1 (1-3)

Card 5: Control Data (6E12.0).

RXXN1(1-12)	Limiting value of the diffusion coefficient[a] (100 cm)
RXXN2(13-24)	Parameter for higher order VALE formulation $\lvert IXC1 \rvert > 2$. 1/6 - Taylor Series. 7/36 - Linear Flux. 1/4 - Linear Finite Element If made negative, the fission and scattering source will not be calculated using the higher order approximation.
RXXN3(25-36)	The zone (see IXEN8) and group dependent diffusion coefficients are multiplied by RXXN3 [1.0].
RXXN4(37-48)	This number is added to the diffusion coefficients after RXXN3 is applied [0.0].
RXXN5(49-60)	$X_e{}^{135}$+ I^{135} yield fraction for equilibrium Xenon (see IXEN19).
RXXN6(61-72)	Factor Q in equation (9) Section XI.

Card 6: Control Data (cont.) (6E12.0).

RXXN7(1-12)	Reference temperature (degrees C) at the next-to-latest version GRUPXS cross section file.
RXXN8(13-24)	Reference temperature (degrees C) at the latest GRUPXS file.
RXXN9(25-36)	Correlation parameter for the arctangent dependence of cross sections on zone temperatures (linear correlation if 0.0).
RXXN10(37-48)	Factor applied to space interpolation slope (see section XI) for space-energy rebalance. If zero, no space interpolation will be done.
RXXN11(49-60)	Factor applied to final rebalance factors for space-energy rebalance (1.0).

[a] If a larger value is calculated, the limiting value is used (essential to avoid poor convergence characteristics), defaulted in VENTURE proper.

RXXN12 Xenon decay constant λ_{Xe} for equilibrium Xenon (sec^{-1}) (see IXEN19).

Section 003: Geometric Description

Card 1: 003 in Columns 1-3.

Card 2: Data (13I3)

IGOM(1-3) Reference Geometry.

1 - Slab (X) one-dimensional.
2 - Cylinder (R).
3 - Sphere (S).
6 - X-Y, two-dimensional.
7 - R-Z.
8 - Θ-R.
9 - T (equilateral triangle).
10 - H (equilateral hexagon).
14 - X-Y-Z, three dimensional.
15 - Θ-R-Z.
17 - T-Z.
18 - H-Z.

IMBL(4-6) Boundary condition at start of rows (left).

0 - Zero flux.
1 - Reflected.
2 - Extrapolated.
3 - Repeating with opposite end.

IMBR(7-9)[a] Boundary condition at end of rows (right).

0 - Zero flux.
1 - Reflected.
2 - Extrapolated.
3 - Automatically if IMBL=3.
4 - Repeating with next adjacent face (rotational symmetry with boundary JMBB).
5 - Inverted repeating this face (180° rotational symmetry).

---

[a] Note interchange of IMBR and JMBT from old ORNL codes; only those boundaries required for the geometry need values.

JMBT(10-12) Boundary condition at start of columns (top).
0, 1, 2, options above.

JMBB(13-15) Boundary condition at end of columns (bottom)
0, 1, 2, options above (set = 4 if IMBR = 4).

KMBF(16-18) Boundary condition face of planes (front)
0, 1, 2, options above.

KMBR(19-21) Boundary condition back of planes (back)
0, 1, 2, options above.

NBS(22-24) Number of buckling specifications: remember that buckling is normally used only to approximate leakage in those coordinate directions untreated, and not for S, R-Z and three-dimensional problems.

0 - None, code uses $B_1^2 = 0.0$.

1 - Single value of B_1^2 applies everywhere.
= NZONE ≡ number of zones, zone dependent.
= N*NZONE, data is given over all zones for the first energy group, then for the next group, and so on through N groups. If there are more than N groups, data for group N is used for the other groups. If NBS > 0, additional data will be required.

NBCS(25-27) Number of constants for external boundaries non-return boundary constants, applied only where the "extrapolated" boundary condition is specified.

0 - Default value of C = 0.4692 is used;

$$C = -\frac{D}{\phi}\frac{\partial\phi}{\partial x}\bigg|_b .$$

1 - Single value to be used everywhere.

6 - Individual values for each of the faces of a 3-D problem (left, right, top, bottom, front, back).

N*6 - Values for the six faces are given for the first energy group, then the next, through N groups; data for group N is used for any additional groups. If NBCS > 0, additional data will be required.

NIBCS(28-30) Number of constants for internal extrapolated boundaries.

0 - None, default value C = 0.4692.

1 - Single value given will be used.

N - Values given in increasing group number order, last value used for any additional groups. If NIBCS > 0, additional data will be required.

NZWBB(31-33) Number of zones which are black absorbers (no return current from these).

If NZWBB > 0, additional data will be required.

NTRIAG(34-36) Orientation of triangular geometry.

0 - 120° between X and Y axes (required for 120° rotational symmetry which is about opposite corner from 0,0).

1 - 60° between X and Y axes (required for 60° rotational symmetry which is about opposite corner from 0.0).

NRASS(37-39)

Card(s) 3: NBS values of buckling required (6E12.0).

Card(s) 4: NBCS values of boundary constants required (6E12.0).

Card(s) 5: NIBCS values of internal boundary constants required (6E12.0).

Card(s) 6: NZWBB identifiers of black zones required (24I3).

<u>Section 004: Geometric Mesh Description</u>

Card 1: 004 in Columns 1-3.

Card(s) 2: (6(I3,E9.0)).

Specify the number of mesh points and the region width for each vertical region going from left to right. For a two- or three-dimensional problem next specify the number of mesh points and the region width for each horizontal region going from the top to bottom starting with a new card. For a three-dimensional problem then specify the number of mesh points and the region width for each region going from front to back starting with a new card. In referring to the geometric mesh, rows of mesh points go from top to bottom, columns of mesh points go from left to right, and planes of mesh points go from front to back. In R and R-Z geometry, a row is a radial traverse. In Θ-R and Θ-R-Z geometries, columns radiate downward from a center at the top and a row has constant radius. In hexagonal geometry, the X and Y axes are assumed to be at 60° (upper left-hand corner), and dimensions are on external boundaries. In triagonal geometry, the X and Y axes are located at 120° (except 60° when NTRIAG in Section 003 is made 1). Distances are given along these coordinates (not at 90° for the special orientations). Data must be ended for each traverse by a blank entry; if the last card of data is filled for any traverse, another card is required (blank).

Section 005: Zone Placement

Card 1: 005 in Columns 1-3.
Card(s) 2: (24I3).

Specify the zone identification numbers (i.e., location of uniform composition) of each region of a traverse along the first horizontal row of regions going from left to right, one number for each interval entry in Section 004. Beginning with a new card, specify the zone numbers of each region in the second horizontal row of regions. Continue these specifications going from top to bottom. For a one-dimensional problem, the zone numbers are specified for only one traverse. For a three-dimensional problem, give the two-dimensional grid for the front plane of regions and continue these to map the material through to the back plane. The cross section set later to be associated with the zone numbered 1 will be used as a reference, so

zone 1 might be located within a core rather than in a blanket or reflector. Also it will prove convenient to number consecutively zones which will contain the same material (will have the same nuclides and use the same microscopic cross section tape). Note that each specification in this block of data is for a traverse along a row and requires the same number of entries.

Section 006: Mesh Overlay (Optional)

New zones may be superimposed within a mesh already described with this data.

Card 1: 006 in Columns 1-3.

Card 2: (I4).

Specify a zone number in the first field; data is read to a blank zone number.

Card(s) 3: (3(6I4)).

Specify blocks of points by left column number and then right column number to give limits along rows, top and bottom row numbers for column limits, and front and back plane numbers for depth limits in that order. If only one row is involved, for example, then that row number is repeated. Only 4 entries are needed for each specification in 2-D geometry. Data is read to blank left column entry. The entry 0006000600050015000200 02 places the new material along column 6 from rows 5 through 15 and on only plane 2. Remember that each mesh point has an associated volume around it - mesh points do not lie on material interfaces; specifying a single mesh point here, say 0006000600050005000200 02 does involve the associated volume.

Section 012: Assignment of Nuclide Name Sets to Zones

This data is used to block the nuclide concentrations.

Card 1: 012 in Columns 1-3.

Card 2: Number of subzones in Columns 1-3, NSZ.

Card 3: Referencing data (4I3,E12.0).

M1(1-3)	First zone number of a consecutively numbered set of zones.
M2(4-6)	Last zone number of the set.

NS(7-9)	Nuclide set reference number (out of the integers from 1 to the number of sets).
NC(10-12)	Zone classification number.
VF(13-24)	Volume fraction associated with zone concentrations in these zones. [1.0] Cards 3 are read until a blank or zero M1 number is encountered.

Card(s) 4: Subzone data (4I3,E12.0,I3) required if NSZ > 0.

MM1(1-3)	First subzone number of a consecutively numbered set of subzones.
MM2(4-6)	Last subzone number of the set.
NMS(7-9)	Nuclide set reference number.
NMC(10-12)	Zone number containing these subzones.
VMC(13-24)	Fraction of the zone volume applying to each of these subzones.
NMCOPT(25-27)	If = 1, the first subzone is assigned to zone NMC, the next subzone is assigned to the next zone, etc., indexing upward through the subzone set, one subzone assigned to a zone. Cards 4 are read to a blank (zero MM1).

Section 013: Nuclide Names in Sets

This data is necessary to relate concentration assignments by nuclide name.

Card 1: 013 in Columns 1-3.

Card 2: NNS maximum number of nuclides in any set in Columns 1-3.

Card 3: NDXS number of nuclides in this set in Columns 1-3.

Card(s) 4: Names of nuclides (alphanumeric characters) in the set The names must correspond with user identification names (not absolute labels) in the cross-section library, NDXS six-character names (12A6) required.
Cards 3 and 4 are repeated for each set specified in Section 012 through the maximum set number.

Section 020: Nuclide Concentration Assignments

In this assignment of nuclide concentrations for some initial condition, overlay is permitted; that is the last assignment to a zone overrides any previous ones.

Card 1: (I3, 3X, 2I3, E12.0) Section Card.

Columns (1-3)	Must contain the section identification 020.
NDO(7-9)	Option that no concentrations are supplied if <0 which assumes that the file ZNATDN exists and is not to be written, and no more cards are supplied in this section.
NCN(10-12)	Cycle reference (count) for documentation.
TIME(13-24)	Reference time (days) for documentation.

Card 2: Zone set (3I3).

MZ1(1-3)	First zone number of a consecutively numbered set.
MZ2(4-6)	Last zone number of the set.
MZI(7-9)[a]	Reserved

Card(s) 3: Concentration assignments 4(A6,E12.0).

Specify a six character alphanumeric name of a nuclide and then its concentration, and continue with sets of these to a blank name.

Cards 2 and 3 are read until a blank card (zero MZ1) is encountered.

Note: Names must correspond precisely with those given in Section 013 and with those in the cross-section library.

Card(s) 4: Subzone set (3I3), required if NSZ > 0.

MSZ1(1-3)	First subzone number of a consecutively numbered set of subzones.
MSZ2(4-6)	Last subzone number of the set.
MSZI(7-9)[a]	Option on input.

---

[a]For processing with the special processor DENMAN, a -1 here causes the nuclide densities in these locations to be set to zero before the additions are made.

0 - Input concentrations.

+1 - Use the concentrations from the corresponding zone (the nuclide set for the zone and subzone must be the same for this option).

Card(s) 5: Subzone concentrations 4(A6,E12.0), required if MSZI = $\leq$0. Cards 4 and 5 are read until a blank card (zero MSZ1) is encountered.

Section 028: Criticality Search Data for Search Problems (Required if ICX3 > 0 or if ICX2 = 1 and ICX3 $\geq$ 0)

Card 1: (I3) 028 in Columns (1-3)

Card 2: (I3)

NSP(1-3) Search set identifier, set equal to ICX3 in DVENTR.

Card 3: (6E12.0) Search specifications.

XSH1(1-12) Desired multiplication factor (1.0).

XSH2(13-24) Multiplication factor slope, $\partial k/\partial \lambda$ where λ is the search problem eigenvalue.

XSH3(25-36) Convergence criterion to be met by k, $\varepsilon_n = (k_n - k_{n-1})/k_n$ where n refers to the nth outer iteration [5.0E-5].

XSH4(37-48) Convergence criterion to be met by eigenvalue of the search problem [1.0E-3].

XSH5(49-60) Modifier applied to nuclide concentration varied specially (for NSH1 = 7 only see card 4).

XSH6(61-72)

Card 4: (24I3) Search specifications.

NSH1(1-3) Type of search.

0 - Not defined.

1 - Buckling.

2 - 1/V.

5 - Dimension.

7 - Nuclide concentration search by proportional adjustments of selected initial concentration.

9 - Nuclide concentration search by adding weighted eigenvalue adjustments to selected initial concentration.

NSH2(4-6)	Subzone option when NSH1 = 7 or 9. 0 - Search data by zone. 1 - Search data by subzone.
NSH3(7-9)	Maximum number of neutronic eigenvalue problems allowed for the search (a zero specifies a direct search).
NSH4(10-12)	Number of first dimension coarse mesh intervals (data required only for a dimension search, NSH1 = 5).
NSH5(13-15)	Number of second dimension coarse mesh intervals.
NSH6(16-18)	Number of third dimension coarse mesh intervals.
NSH7(19-21)	Maximum number of isotopes or nuclides defined in a <u>set</u> for a concentration search (NSH1 = 7 or 9 only).
NSH8(22-24)	Number of <u>sets</u> specified for concentration search (NSH1 = 7 or 9 only).
NSH9(25-27)	Search problem eigenvalue range allowed for an acceptable solution. -1 - $\lambda > 0$. 0 - No restriction. 1 - $0 < \lambda < 1$. 2 - $\lambda < 1$.
NSH10(28-30)	State of the iterative procedure allowed for an acceptable solution. 0 - No restraint. 1 - Convergence criteria not met. 2 - Convergence criteria not met and problem not converging.
NSH11(31-33)	Conditions allowed in the solution for it to be acceptable. 0 - All nuclide concentrations > 0 during calculation. 1 - All nuclide concentrations > 0 at solution. 2 - Allow nuclide concentrations < 0.

NSH12(34-36) If > 0, update the macroscopic cross sections during a direct nuclide search (NSH3 = 0).

Additional input is required if NSH1 = 5 or 7 or 9.

For NSH1 = 5

Card(s) 5: (6E12.0)

SRHDJ(J) NSH4 values to be used as first dimension coarse mesh modifiers; coarse mesh intervals are adjusted in proportion to these modifiers.

Card(s) 6: (6E12.0)

SRHDI(I) NSH5 values to be used as second dimension coarse mesh modifiers.

Card(s) 7: (6E12.0)

SRHDK(K) NSH6 values to be used as third dimension coarse mesh modifiers.

For NSH1 = 7 There must be NSH8 sets of Card 5 and Card(s) 6.

Card 5: (2I3)

NSHZ1(1-3) First number of a consecutively numbered set of zones (or subzones).

NSHZ2(4-6) Second number of a consecutively numbered set of zones (or subzones).

Card(s) 6: (12(A6))

HNNAMS(N) NSH7 nuclide names whose concentrations are to be adjusted proportionately in the specified zones (subzones); blanks are allowed.
Concentrations are adjusted by the equation $C_2 = \lambda C_1$ where λ is a common multiplier.

Card 7: (10(A6))

HNSHN(N) The names of up to 10 nuclides to have concentrations adjusted inversely (concentration changes are of opposite sign to those of the other nuclides) in all search zones
$C_2 = C_1 + C_1*(1-\lambda)*XSH5$.

For NSH1 = 9

Card 5: (2I3)

NSHZ1(1-3) (See above)

NSHZ2(4-6)

Card(s) 6: [4(A6,E12.0)]

(HNNAMS(N), CHZDN(N)) — NSH7 pairs of nuclide names and relative concentration changes to be made in the specified zones (subzones). Concentrations are adjusted by the equation $C_2 = C_1 + \lambda * \Delta C$.

B. DCRSPR

This code processes data for the cross section processor code. Since a number of tasks have been programmed in the latter, the necesary instructions and data must be supplied as required by the various options. A primary role is the conversion from a nuclide ordered cross section file ISOTXS, as usually available from cross section preparation codes, to a group ordered GRUPXS file required by many of the computation modules in this system. Also, extraneous data in an ISOTXS file may be eliminated, such as the higher moments of scattering and data for nuclides not of interest, important to hold down the computer memory and possibly the data transfer requirements for a calculation.

Header card: DCRSPR in columns (1-6)

Card 1: Control Options (24I3)

ICD1(1-3)

ICD2(4-6)

ICD3(7-9) — Option on input cross-section file processing
- 0 - No processing required.
- 1 - Generate a new nuclide-ordered file. (ISOTXS) from the file or files having format ICD5 (requires additional input data)

ICD4(10-12) — Option to generate a new group-ordered file (GRUPXS) from a nuclide-ordered file.
- 0 - No.
- 1 - Yes.

ICD5(13-15) — Format of input cross section for ICD3=1.
- 0 - Nuclide-ordered file (ISOTXS)

1 - CITATION cross-section sets.

2 - Merge two nuclide-ordered files (ISOTXS); the file control parameters NGROUP, MAXORD, ICHIST, NSCMAX, and NSBLOK must be the same for both files.

ICD6(16-18) Option on principal cross-section data for ICD4=1.

0 - Retain all data.

1 - Redefine (n,γ) cross section to be the capture cross section = $(n,\gamma) + (n,\alpha) + (n,p) + (n,d) + (n,t) - (n,2n)$.

ICD7(19-21) Option on scattering data for ICD4=1.

0 - Retain all data.

1 - Retain the total scattering only.

ICD8(22-24) Option on scattering order for ICD4=1.

0 - Retain all data.

N - Retain orders up to (N-1) only.

ICD9(25-27) Option on scattering record blocking factor for ICD4=1.

0 - NSBLOK=1

N - NSBLOK=N, if (NISO/N)*N=NISO, otherwise NSBLOK≡NISO where NISO is the number of nuclides.

ICD10(28-30) Option to compute the total scattering matrix from the components for ICD4=1: TOTAL=ELASTIC + INELASTIC + N2N (This must be done if the GRUPXS file is to be used by VENTURE and there is no total scattering data present).

0 - No.

1 - Yes.

2 - Yes, but multiply N2N by 2.0.

ICD11(31-33) Option to create isotope mixtures after processing specified by ICD3 and ICD5, if any. A new nuclide-ordered file (ISOTXS) will be written.

0 - No.

1 - Yes (requires additional input data).

ICD12(34-36)
ICD13(37-39)
ICD14(40-42)
ICD15(43-45)
ICD16(46-48)
ICD17(49-51)
ICD18(52-54)
ICD19(55-57)
ICD20(58-60)
ICD21(61-63)
ICD22(64-66)

ICD23(67-69) Option to edit latest nuclide-ordered file (ISOTXS)
0 - No.
1 - Yes.

ICD24(70-72) Option to edit group-ordered file (GRUPXS).
0 - No.
1 - Yes.

If ICD3 ≤ 0 and ICD11 ≤ 0, no additional input is required.

Card 2: (24I3) Control instructions (required if ICD3=1 or ICD11=1).

NOP1(1-3) Number of CITATION cross-section sets to process (if NOP1=0 and ICD3=1 and ICD5=1, set one will be processed). If NOP1>0, card(s) 3 required.

NOP2(4-6) Scattering blocking factor for nuclide-ordered file created form CITATION cross sections.
0 - NSBLOK=1.
N - NSBLOK=N, if (NGROUP/N)*N=NGROUP, otherwise NSBLOK=1.

NOP3(7-9) Option to input a neutron energy spectrum for weighting in mixture calculation.
0 - No.
N - Yes (N should be equal to the number of energy groups on the cross section file). If NOP3>0 card(s) 4 required.

NOP4(10-12)	Option to create pseudo direction dependent transport data. 0 - No. 1 - Yes, if NOP4>0, card 5 required.
NOP5(13-15)	Option to input override data for isotopes. 0 - No. N - Yes (N is the number of card(s) 6).
NOP6(16-18)	Number of mixtures (required if ICD11=1). Card(s) 7, 8, and 9 are required if NOP6>0.
NOP7(19-21)	Maximum number of isotopes in any mixture (required if ICD11=1).
NOP8(22-24)	
NOP9(25-27)	
NOP10(28-30)	Option on use of the override data for isotopes when NOP5>0 (applicable only when ICD3=1 and ICD5=0). 0 - Data corresponds with the order of isotopes in the file. 1 - Data identifies isotopes to be selected by unique isotope label.
NOP11(31-33)	
NOP12(34-36)	
NOP13(37-39)	
NOP14(40-42)	
NOP15(43-45)	
NOP16(46-48)	
NOP17(49-51)	
NOP18(52-54)	
NOP19(55-57)	
NOP20(58-60)	
NOP21(61-63)	
NOP22(64-66)	
NOP23(67-69)	
NOP24(70-72)	Option on edit during CITATION cross section processing.

0 - No.

1 - Yes.

Note: Any subsequent data causes file CXSPRR to be generated.

Card(s) 3: (24I3) CITATION set numbers to process (required if NOP1>0).

(ISET(I),I=1,NOP1) Set numbers in ascending order of appearance in library.

Card(s) 4: (6E12.0) Neutron energy spectrum (required if NOP3>0).

(WGT(I),I=1,NOP3) Spectrum for weighting in mixture calculation.

Card 5: (3E12.0) Multipliers for transport cross section (required if NOP4>0).

(TRMOD(I),I=1,3) Multiplier for each coordinate direction STRPD(I)=TRMOD(I)*STRPL(1) for each energy.

Card 6: (3A6,6X,3E12.0,4I3) Isotope override data, required if NOP5>0 and there must be NOP5 card(s) 6.

HISONM(1-6)	Hollerith isotope label (unique).
HABSID(7-12)	Hollerith isotope label (absolute).
HMAT(13-18)	Hollerith isotope label (reference).
AMASS(25-36)	Gram atomic weight.
EFISS(37-48)	Total thermal energy yield/fission (watt-sec/fission).
ECAPT(49-60)	Total thermal energy yield/capture (n,γ)(watt-sec/capture).
KBR(61-63)	Isotope classification.
IDP1(61-63)	
IDP2(67-69)	
IDP3(70-72)	

When NOP10=0 and ICD3=1, the contents of these cards control the processing of the cross sections. The order of these cards must be one-to-one with the order of the isotopes in the old data file(s). One card is read for each isotope. If for the label HISONM the word 'DELETE' is specified, the data for this isotope are not written on the new nuclide-ordered file; otherwise, the data will be included and non-blank names and non-zero data on the card will replace the old data. The new file is completed when NOP5 isotopes have been processed (copied or deleted); NOPS may be less than the number on the old file.

When NOP10=1 and ICD3=1 and ICD5=0, this data may be used to control the content of the new ISOTXS file. The order of the cards is not specified since the unique label (HISONM) is used to identify isotopes to be copied to the new file. Non-blank or non-zero values for the rest of the data will be put on the new file. The unique label may not be changed when using this option. If NOP5=0, data for all isotopes in the old file will be copied to the new file.

Card(s) 7 and 8 are required for creating mixtures if NOP6>0.

Card 7: (2I3)

M1(1-3)	First mixture number of a consecutive set of mixtures.[a]
M2(4-6)	Last mixture of a consecutive set of mixtures.

Card(s) 8: 4(A6,E12.0)

Specify sets of (1) a character unique isotope label and (2) the concentration (Atoms/b-cm). A blank label ends this data for these mixtures. Any isotope appearing in a mixture will be deleted from the new file.

Sets of card(s) 7 and 8 are read until a value of M1=0 is encountered.

Card(s) 9: (3A6,6X,3E12.0,4I3)

Reference data for the mixtures, required if NOP6>0 and there must be NOP6 card(s). Card format is the same as Card 6. Non-blank data should be supplied for labels and non-zero data for KBR. AMASS, EFISS, and ECAPT are calculated for the mixture, but are replaced by non-zero entries.

C. DUTLIN

This special input processor is used to add or replace records on the interface file CONTRL which is initially created by the control module. For example, the Reaction Rate module reads the record RRTINS to obtain the instructions for calculating reaction rates, the exposure module reads the record EXPINS for the instructions for exposure and shutdown calculations. This processor may be used to add the RRTINS and EXPINS and other records to the CONTROL file.

---

[a] Normally M1 is a mixture number, running from 1 up, and M2 is left blank.

Each record of the file CONTRL consists of a REAL*8 six character identifier, 100 REAL*8 words and 100 INTEGER*4 words. The 100 REAL*8 words may contain Hollerith information, but the Hollerith will always be in the first locations and each Hollerith word will consist of six characters.

Header card: DUTLIN in columns (1-6).

Card 1: (A6,6X,4I3).

HXCTL(1-6)	Record identifier (see Figure 4. Interface File CONTRL).
NH(13-15)	Number of REAL*8 six-character Hollerith words to be input in (12A6) format.
NR(16-18)	Number of REAL*8 floating point numbers to be input in (6E12.0) format.
NI6(19-21)	Number of integers to be input in (12I6) format.
NI3(22-24)	Number of integers to be input in (24I3) format.
IPR(25-27)	Edit data if > 0.

Note: NH + NR $\mathcal{F}$ 100, and NI6 + NI3 $\mathcal{F}$ 100.

Card(s) 2: (12A6) Required if NH > 0.

(XCD(I), I=1,NH) REAL*8 Hollerith data.

Card(s) 3: (6E12.0) Required if NR > 0.

(XCD(NH+I), I=1,NR) REAL*8 floating point data.

Card(s) 4: (12I6) Required if NI6 > 0.

(IXD(I), I=1,NI6) Integer data.

Card(s) 5: (24I3) Required if NI3 > 0.

(IXD(NI6+I), I=1,NI3) Integer data.

Note: Unassigned values of XCD or IXD will be zero.

Data for additional records will be processed until HXCTL on card 1 equals 6H_____ or 6HBLANK__ (or end-of-file is read).

D. DCMACR

This code reads macroscopic cross section data in the section 008 format of the CITATION code[a] and writes a pseudo CITATION format

---

[a] ORNL/TM-2496; note that certain assumptions are made in converting the data to a pseudo microscopic file which includes values of the fission cross section, and the full capability implied in the specifications for file ISOTXS or GRUPXS is of course not possible.

microscopic cross section file on logical unit 8. This file may then be converted to the standard interface file GRUPXS by the cross section processor code in this system.

Header card: DCMACR in Columns (1-6).

Card 1: (I3)

MVX(1-3) The number of zones (pseudo nuclides) in the CITATION format macroscopic data below.

Card 2: (12A6)

TITLE(1-72) Descriptive title.

Card(s) 3: The data for a complete CITATION input section 008 including the 008 card.

E. DENMAN

This code is accessed by a module number 99 in the calculational path instruction to the control module. On option, the user may:

(1) Change the cross section reference
   (a) change zone and/or subzone nuclide set reference
   (b) change nuclide set definition
(2) Change (overlay) the nuclide concentrations in file ZNATDN (or QNATDN)
(3) Produce a deck of nuclide concentrations in the Section 020 format of the special processor DVENTR
(4) Edit the contents of file ZNATDN (or QNATDN)
(5) Create file SEARCH with multiple sets of search data.

The interface file NDXSRF, which contains referencing information, is always required.

If no data is specified (the code finds an end-of-file or the first card after the header card contains a 999 in Columns 1-3) the default task of option NOPN2=1 below is performed (a deck of nuclide concentrations in the section 020 format is produced).

Header card: DENMAN in Columns 1-6.

<u>Section 010: Nuclide Set Reference Instructions (optional)</u>

Card 1: 010 in Columns 1-3.

Card 2: Instructions (24I3)

Card 2: Instructions (24I3)

JOPN1(1-3) Option to change nuclide set reference

0 - no change

1 - change nuclide set number assigned to zone and/or subzone (requires additional input in form of Section 012)

2 - change nuclide set definitions (requires additional input in form of Section 013)

JOPN2(4-6) Reserved

JOPN3(7-9) Reserved

JOPN4(10-12) Reserved

JOPN5(13-15) Reserved

JOPN6(16-18) Option on the version of the referencing file NDXSRF to be written.

0 - rewrite old version

1 - write new version

JOPN7-JOPN24 Reserved

Note: When nuclide sets are changed the absolute nuclide name associated with each position in the old set and the new set must agree. Also a change in nuclide sets may require redefining the file SEARCH.

Section 012: Assignment of Nuclide Sets to Zones and/or Subzones (Conditional - Required if JOPN1 = 1)

Card 1: 012 in columns 1-3.

Card 2: NSZ(1-3) Number of subzones (not used but is obtained from file NDXSRF)

Cards 3: Zone referencing data (4I3, E12.0)

M1(1-3) First zone number of a consecutively numbered set of zones

M2(4-6) Last zone number of the set

NS(7-9) Nuclide set reference number (out of the integers from 1 to the number of sets defined in file NDXSRF, zero is allowed if the zone contains subzones)

NC(10-12) Not used

VF(13-24) Not used

Cards 3 are read until a blank or zero M1 number is encountered

Cards 4: Subzone referencing data (4I3, E12.0, I3) (required if subzones are present)

MM1(1-3)	First subzone number of a consecutively numbered set of subzones
MM2(4-6)	Last subzone number of the set
NMS(7-9)	Nuclide set reference number (out of the integers from 1 to the number of sets defined in file NDXSRF)
NMC(10-12)	Not used
VMC(13-24)	Not used
NMCOPT(25-27)	Not used

Cards 4 are read until a blank or zero MM1 is encountered.

Section 013: Nuclide set Definition (Conditional - Required if JOPN1 = 2)

Card 1: 013 in Columns 1-3

Card 2: NNS(1-3) Maximum number of nuclides in any set (not used but is obtained from file NDXSRF)

Card 3: NDXS(1-3) Number of nuclides in this set (enter zero if no change in this set)

Cards 4: Names of nuclides (alphanumeric characters) in the replacement set which must correspond with user identification (unique) names (not absolute names) in the cross section library, there must be NDXS six-character names (12A6).

Cards 3 and 4 are repeated for each nuclide set specified in NDXSRF file.

Section 018: Nuclide Concentration Instructions (Optional)

Card 1: 018 in Columns 1-3

Card 2: Instructions (24I3)

NOPN1(1-3) Option to change (overlay) the nuclide concentrations in the latest version interface file.

0 - No

1 - Yes (requires additional input in form of Section (020)

NOPN2(4-6) Option to produce a deck of the nuclide concentrations in the format of Section 020 of the

DVENTR special input processor from the latest version interface file. The deck is written on unit 7 and may be punched or saved on an external device according to the job control instructions.

0 - No

1 - Yes

NOPN3(7-9) Option to edit the nuclide concentrations from the latest version interface file.

0 - No

1 - Yes

NOPN4(10-12) Option on nuclide concentration interface file name.

-1 - Read QNATDN, write QNATDN

0 - Read ZNATDN, write ZNATDN

1 - Read QNATDN, write ZNATDN

Note: A file is written only when NOPN1 = 1

NOPN5(13-15) Reserved

NOPN6(16-18) Option on version of nuclide concentration file to be written

0 - rewrite old version

1 - write new version

NOPN7-NOPN24 Reserved

Section 020: Nuclide Concentrations (Conditional - Required if NOPN1 = 1)

The form of the data is as described for Section 020 of the DVENTR special input processor except the NDO on Card 1 has no affect. Note that existing concentrations are not altered unless new concentrations are assigned. If a zero concentration is desired for a nuclide in one or more zones where it is non-zero in the file, then such must be specified. There is provision to set nuclide densities to zero by option before adding new values. Following the identification of a series of zones (MZ1, MZ2), MZ1 (Col. 7-9) set to -1 causes all nuclide densities in zones MZ1 through MZ2 to be set to zero, and for a set of subzones (MSZ1, MSZ2), MSZ1 (Col. 7-9) set to -1 effects the same for this set of subzones. Full overlay capability

of data by blocks of zones or subzones is implemented allowing redundant specifications; the last assignment in such event overrides any earlier ones.

Note: If nuclide sets have been changed, reference to nuclides must be made with the new unique names.

Section 026: Search Data Instructions (Optional)

Card 1: 026 in Columns 1-3

Card 2: Instructions (24I3)

LPHN1(1-3) Option to create a SEARCH interface file

0 - No

1 - Yes (requires additional input in form of Section 028)

LOPN2(4-6) Reserved

LOPN3(7-9) Reserved

LOPN4(10-12) Reserved

LOPN5(13-15) Reserved

LOPN(16-18) Option on the version of the SEARCH file to be written

0 - rewrite old version

1 - write new version

LOPN7-LOPN24 Reserved

Section 028: Criticality Search Data (Conditional - Required if LOPN1 = 1)

The form of the data is as described for Section 028 of the DVENTR special input processor except that multiple sets of search data may be input. Data is processed until NSP on Card 2 is less than or equal to zero.

Section 999: Terminator

A card containing 999 in Columns 1-3 is recommended for termination of this data.

END Card

The block of data for this processor requires a final card with END in Columns 1-3.

F. DMISLY

This code is accessed by a module number 99 and performs miscellaneous tasks described by the input options given below:

Head Card: DMISLY in Columns (1-6).

Card 1: Control Options (24I3). Always required.

IOP1(1-3) 1 - Expand an RTFLUX file by adding a dimension (controlled by IϕP4 below) and write over the old file. The permitted expansions are:

X to XY (last dimension),

R to RZ or ΘR (last or first dimension),

XY to XYZ (1st dimension),

RZ to ΘRZ (first dimension),

ΘR to ΘRZ (last dimension),

T to TZ (last dimension),

H to HZ (last dimension).

2 - Same as IϕP1=1 but write a new version of the file.

IPO2(4-6) Same as IOP1 but for an ATFLUX file.

IOP3(7-9) Same as IOP1 but for a GEODST file. (Requires additional input).

IOP4(10-12) 0 - Add a last dimension.

1 - Add a first dimension.

IOP5(13-15) The number of fine mesh intervals for the added dimension. If IOP5 = 1, the only change to the GEODST file (IOP3>0) will be new buckling or outer boundary conditions, if specified, (see cards 3, 4, and 5). If IOP5 = 1 and IOP4 = 0, no change will be made to the R(A)TFLUX files.

IOP6(16-18) 0 - Cosine flux distribution for IOP1 and/or IOP2>0. The expanded flux distribution will be: ϕ (expanded) = ϕ (input) x Z_I, where $Z_I = \text{Cos}\ (X_I)$,

$$X_I = \frac{I-1/2}{IOP5} \times (\pi \times XOP1).$$ (XOP1 input on card 2).

1 - Same as IϕP6=0 but with a sine flux distribution.

IOP7(19-21) 1 - Fold fluxes from a one-dimensional RTFLUX file and a one- or two-dimensional RTFLUX file (two latest versions) to produce a two- or three-dimensional RTFLUX file and write over the old one- or two-dimensional file.

See IOP9 option if both files are one-dimensional. The possible geometries are:

Y, X (X,Y see IOP9)	to XY
Z, R (R,Z see IOP9)	to RZ
Z, T	to TZ
Z, H	to HZ
Z, XY	to XYZ
Z, θR	to θRZ

The fluxes from the one-dimensional file will be normalized by dividing by ϕ_N in each group flux where N is the point where the first group is the maximum.

2 - Same as IφP7=1 but write a new version of the file.

IOP8(22-24) Same as IOP7 but for ATFLUX files.

IOP9(25-27) 0 - The next-to-latest version of the file is the Y or Z file and the latest version is the X or R file. The latest version will be written over for IφP7=1 or IφP8=1.

1 - The latest version of the file is the Y or Z file and the next-to-latest version is the X or R file. The next-to-latest version will be written over for IφP7=1 or IφP8=1.

IOP10(28-30)

IOP11(31-33)

IOP12(34-36)

IOP13(37-39)

IOP14(40-42)

IOP15(43-46)

IOP16(47-49)

IOP17(50-51)

IOP18(52-54)

IOP19(55-57)

IOP20(58-60)

IOP21(61-63)

IOP22(64-66) Print contents of input files (if >0).

IOP23(67-69) Print content of output files (if >0).

IOP24(70-72) 0 - Minimum debug edit.

1 - Medium debug edit.

2 - Maximum debug edit.

Card 2: Control Options (6E12.0). Always required.

See IOP6 card 1.

XOP1(1-12) 0.0 - $Z_I = 1.0$

1.0 - Z_I ranges from +1.0 to -1.0 (IOP6=0, cosine distribution).

0.5 - Z_I ranges from +1.0 to 0.0 (IOP6=0, cosine distribution).

1.0 - Z_I ranges from 0.0 to 0.0 (IOP6=1, sine distribution).

0.5 - Z_I ranges from 0.0 to +1.0 (IOP6=1, sine distribution).

XOP2(13-24) Width of added dimension for GEODST expansion (cm or radians).

Card 3: GEODST Data (24I3). Required only if IOP3>0.

IGO1(1-3) First boundary condition of added dimension (IMB1, JMB1, or KMB1).

IGO2(4-6) Last boundary condition of added dimension (IMB2, JMB2, or KMB2).

IGO3(7-9) The number of buckling specifications (NBS) (if >0 requires additional input).

IGO4(10-12) The number of constants for external boundaries (NBCS) (if >0 requires additional input).

2 - The first and last surface constants for the added dimension will be given. NBCS on the GEODST file must be 6 for this option.

1 2 See NBCS on GEODST file.

Card 4: Buckling Data (6E12.0). Required only if IGO3>0.

IGO3 numbers required.

Card 5: Boundary Constants (6E12.0). Required only if IGO4>0.

IGO4 numbers required.

IX. JOB CONTROL INSTRUCTIONS

A. THE CATALOG PROCEDURE

To run a job on the local IBM computers the computer operating system must have available the job control instructions for that job. Most of the job control instructions for executing the code modules in this computational system are cataloged and stored in a library which is accessed at run time. This catalog is shown in Figure 5.

The information in the cataloged job control instructions is parameterized and actual values of these parameters must be supplied by the user. These parameters have values which are problem-dependent and include core region size, CPU time, and space, buffer size, and blocking factors for each auxiliary storage I/O data file.

Figure 6 shows a typical set of job control instructions which the user supplies to supplement or override the instructions in the catalog. Only a brief description of these instructions will be given here. For information about the use of the local computers, refer to the local report "Programmers Notebook" issued by the Computer Sciences Division of the Nuclear Division of Union Carbide.

B. USER SUPPLIED JOB CONTROL INSTRUCTIONS

The parameters NB1, NB2, B1, B2, NX, NS, and N1 through N16 shown in Figure 10 are described under Problem Dependent Data File Parameters below. The core storage region size (in k=1024 bytes), specified on the "// GOSIZE =" card must be approximately 300 plus the primary data allocation size (IP1, Figure 2.) divided by 250. Any cards present between the "// GOSIZE=" card and the "//GO.SYSIN DD *" card override the corresponding cards in the catalog, and must be given in the same order as those in the catalog - unit numbers increasing. Note that when overriding cards in the catalog, a "GO." should be punched following the // in column 1-2: i.e. "//GO.".

The catalog identifies three individual data files for printed output. The file PRINT receives output from the driver and consists of all user input card images, the file FT06F001 receives output from the calculational or special code modules, and the file FT99F001

receives output from the control module CONTROL1 (a history of the run) and selected output from the calculation modules. If none of these files are overriden, the output is printed locally, with PRINT first, followed by FT06F001, and FT99F001 last. A card "//GO.PRINT DD DUMMY" causes the file PRINT to be null and no DRIVER output will be printed. The card "//GO.FT99F001 DD SYSOUT=(J,RM01)" causes the output from the control module to be printed at a remote printer identified as RM01.

A card such as "//GO.FT32F001" makes a special assignment overriding the catalog specification. It identifies logical unit 32 as a standard labeled tape. The parameter NNNNNN should be replaced by the actual tape number. DDD should be replaced by NEW if the tape is to be written, or OLD if the tape is to be protected from being written, and SOME.NAME should be replaced by an identifying name. Labeled tapes are recommended in general. If an overriding data set identifies a disk other than a scratch disk (SYSDA), the DSN parameter must also be included.

All cards between "//GO.SYSIN DD *" card and the "/*" card are data cards for the run. The first four are the control module instructions described in Figure 2. The fourth card describes the calculational path as follows: (1) The Input Processor module is accessed, for example, to read cards and write the nuclide ordered cross section file ISOTXS on the tape unit 32, (2) The special input processor DCRSPR is accessed to read input data and write the necessary interface files for the Cross Section Processor Module, (3) Then the module for processing cross sections is accessed, to convert the nuclide ordered file ISOTXS to the group ordered file GRUPXS, (4) The special input processor DVENTR is then accessed to read input data and write the necessary interface files for the VENTURE Neutronics module, (5) The VENTURE Neutronics module is then accessed, (6) The special processor DUTLIN is accessed to read data and write the instructions for the Reaction Rate module, and (7) The Reaction Rate module is accessed.

Calculations may be done without using the input processor as shown, but data must be made available as required.

FIGURE 5. THE CATALOG PROCEDURE.

```
//BOLDVENT PROC GOSIZE=540K,GOTIME=,MODULE=SCALE,
// NB1=1,NB2=1,B1=3520,B2=32000,NX=2,NS=50,N1=100,
// N2=1,N3=1,N4=1,N5=1,N6=1,N7=1,N8=1,N9=1,N10=1,N11=1,N12=1,N13=1,
// N14=1,N15=1,N16=1
//GO      EXEC  PGM=&MODULE,
//              REGION=&GOSIZE,TIME=&GOTIME
//STEPLIB  DD UNIT=3330,VOL=SER=XXXXXX,DISP=SHR,
//            DSN=BOLD.VENTURE
//PRINT    DD  SYSOUT=A,DCB=(RECFM=VBA,LRECL=137,BLKSIZE=1100)
//FT01F001 DD UNIT=SYSDA,SPACE=(&B1,(&NS,1)),
//              DCB=(RECFM=VBST,LRECL=X,BUFNO=&NB1,BLKSIZE=&B1)
//FT02F001 DD UNIT=SYSDA,SPACE=(&B1,(&NS,1)),
//              DCB=(RECFM=VBST,LRECL=X,BUFNO=&NB1,BLKSIZE=&B1)
//FT03F001 DD UNIT=SYSDA,SPACE=(80,(10)),
//              DCB=(RECFM=F,BLKSIZE=80)
//FT04F001 DD UNIT=SYSDA,SPACE=(3200,(&N1,&NX)),
//              DCB=(RECFM=FBS,LRECL=80,BLKSIZE=3200)
//FT05F001 DD UNIT=SYSDA,SPACE=(3120,(200,100)),
//              DCB=(RECFM=FB,BUFNO=1,LRECL=80,BLKSIZE=3120)
//FT06F001 DD  SYSOUT=A,DCB=(RECFM=VBA,LRECL=137,BLKSIZE=1100)
//FT07F001 DD SYSOUT=B,DCB=(RECFM=F,BLKSIZE=80)
//FT08F001 DD UNIT=SYSDA,SPACE=(&B1,(&N1,2)),
//              DCB=(RECFM=VBST,LRECL=X,BUFNO=&NB1,BLKSIZE=&B1)
//FT09F001 DD UNIT=SYSDA,SPACE=(&B1,(&NS,1)),
//              DCB=(RECFM=VBST,LRECL=X,BUFNO=&NB1,BLKSIZE=&B1)
//FT10F001 DD UNIT=SYSDA,SPACE=(&B1,(&NS,1)),
//              DCB=(RECFM=VBST,LRECL=X,BUFNO=&NB1,BLKSIZE=&B1)
//FT11F001 DD UNIT=SYSDA,SPACE=(&B1,(&N1,&NX)),
//              DCB=(RECFM=VBST,LRECL=X,BUFNO=&NB1,BLKSIZE=&B1)
//FT12F001 DD UNIT=SYSDA,SPACE=(&B1,(&N1,&NX)),
//              DCB=(RECFM=VBST,LRECL=X,BUFNO=&NB1,BLKSIZE=&B1)
//FT13F001 DD UNIT=SYSDA,SPACE=(&B1,(&N1,2)),
//              DCB=(RECFM=VBST,LRECL=X,BUFNO=&NB1,BLKSIZE=&B1)
//FT14F001 DD UNIT=SYSDA,SPACE=(&B1,(&NS,1)),
//              DCB=(RECFM=VBST,LRECL=X,BUFNO=&NB1,BLKSIZE=&B1)
//FT15F001 DD UNIT=SYSDA,SPACE=(&B1,(&NS,1)),
//              DCB=(RECFM=VBST,LRECL=X,BUFNO=&NB1,BLKSIZE=&B1)
//FT16F001 DD UNIT=SYSDA,SPACE=(&B1,(&N1,&NX)),
//              DCB=(RECFM=VBST,LRECL=X,BUFNO=&NB1,BLKSIZE=&B1)
//FT17F001 DD UNIT=SYSDA,SPACE=(&B1,(&N16)),
//              DCB=(RECFM=VBST,LRECL=X,BUFNO=&NB1,BLKSIZE=&B1)
//FT18F001 DD UNIT=SYSDA,SPACE=(&B1,(&N16)),
//              DCB=(RECFM=VBST,LRECL=X,BUFNO=&NB1,BLKSIZE=&B1)
//FT19F001 DD UNIT=SYSDA,SPACE=(&B1,(&NS,1)),
//              DCB=(RECFM=VBST,LRECL=X,BUFNO=&NB1,BLKSIZE=&B1)
//FT20F001 DD UNIT=SYSDA,SPACE=(&B1,(&N13)),
//              DCB=(RECFM=VBST,LRECL=X,BUFNO=&NB1,BLKSIZE=&B1)
//FT21F001 DD UNIT=SYSDA,SPACE=(&B1,(&N1,2)),
//              DCB=(RECFM=VBST,LRECL=X,BUFNO=&NB1,BLKSIZE=&B1)
```

(CONT)

```
//FT22F001 DD UNIT=SYSDA,SPACE=(&B1,(&NS,1)),
//             DCB=(RECFM=VBST,LRECL=X,BUFNO=&NB1,BLKSIZE=&B1)
//FT23F001 DD UNIT=SYSDA,SPACE=(&B1,(&N3)),
//             DCB=(RECFM=FT,BUFNO=&NB1)
//FT24F001 DD UNIT=SYSDA,SPACE=(&B1,(&N2)),
//             DCB=(RECFM=FT,BUFNO=&NB2)
//FT25F001 DD UNIT=SYSDA,SPACE=(&B1,(&N12)),
//             DCB=(RECFM=FT,BUFNO=&NB1)
//FT26F001 DD UNIT=SYSDA,SPACE=(&B1,(&N12)),
//             DCB=(RECFM=FT,BUFNO=&NB1)
//FT27F001 DD UNIT=SYSDA,SPACE=(&B1,(&N2)),
//             DCB=(RECFM=FT,BUFNO=&NB2)
//FT28F001 DD UNIT=SYSDA,SPACE=(&B1,(&N2)),
//             DCB=(RECFM=FT,BUFNO=&NB2)
//FT29F001 DD UNIT=SYSDA,SPACE=(&B1,(&N14)),
//             DCB=(RECFM=FT,BUFNO=&NB2)
//FT30F001 DD UNIT=SYSDA,SPACE=(&B1,(&N1,2)),
//             DCB=(RECFM=VBST,LRECL=X,BUFNO=&NB1,BLKSIZE=&B1)
//FT31F001 DD UNIT=SYSDA,SPACE=(&B1,(&N1,&NX)),
//             DCB=(RECFM=VBST,LRECL=X,BUFNO=&NB1,BLKSIZE=&B1)
//FT32F001 DD UNIT=SYSDA,SPACE=(&B1,(&N1,2)),
//             DCB=(RECFM=VBST,LRECL=X,BUFNO=&NB1,BLKSIZE=&B1)
//FT33F001 DD UNIT=SYSDA,SPACE=(&B1,(&N4)),
//             DCB=(RECFM=VBST,LRECL=X,BUFNO=&NB1,BLKSIZE=&B1)
//FT34F001 DD UNIT=SYSDA,SPACE=(&B1,(&N1,&NX)),
//             DCB=(RECFM=VBST,LRECL=X,BUFNO=&NB1,BLKSIZE=&B1)
//FT35F001 DD UNIT=SYSDA,SPACE=(&B1,(&N1,2)),
//             DCB=(RECFM=VBST,LRECL=X,BUFNO=&NB1,BLKSIZE=&B1)
//FT36F001 DD UNIT=SYSDA,SPACE=(&B1,(&N6,2)),
//             DCB=(RECFM=VBST,LRECL=X,BUFNO=&NB1,BLKSIZE=&B1)
//FT37F001 DD UNIT=SYSDA,SPACE=(&B1,(&N15,2)),
//             DCB=(RECFM=VBST,LRECL=X,BUFNO=&NB1,BLKSIZE=&B1)
//FT38F001 DD UNIT=SYSDA,SPACE=(&B1,(&N15,2)),
//             DCB=(RECFM=VBST,LRECL=X,BUFNO=&NB1,BLKSIZE=&B1)
//FT39F001 DD UNIT=SYSDA,SPACE=(&B1,(&N15,2)),
//             DCB=(RECFM=VBST,LRECL=X,BUFNO=&NB1,BLKSIZE=&B1)
//FT40F001 DD UNIT=SYSDA,SPACE=(&B2,(&N5)),
//             DCB=(RECFM=FT,BUFNO=&NB2)
//FT41F001 DD UNIT=SYSDA,SPACE=(&B1,(&N4)),
//             DCB=(RECFM=VBST,LRECL=X,BUFNO=&NB1,BLKSIZE=&B1)
//FT42F001 DD UNIT=SYSDA,SPACE=(&B2,(&N7)),
//             DCB=(RECFM=VBST,LRECL=X,BUFNO=&NB2,BLKSIZE=&B2)
//FT43F001 DD UNIT=SYSDA,SPACE=(&B2,(&N8)),
//             DCB=(RECFM=VBST,LRECL=X,BUFNO=&NB2,BLKSIZE=&B2)
//FT44F001 DD UNIT=SYSDA,SPACE=(&B1,(&NS,1)),
//             DCB=(RECFM=VBST,LRECL=X,BUFNO=&NB1,BLKSIZE=&B1)
//FT45F001 DD UNIT=SYSDA,SPACE=(&B1,(&N9)),
//             DCB=(RECFM=VBST,LRECL=X,BUFNO=&NB1,BLKSIZE=&B1)
//FT46F001 DD UNIT=SYSDA,SPACE=(&B1,(&N10)),
//             DCB=(RECFM=VBST,LRECL=X,BUFNO=&NB1,BLKSIZE=&B1)
//FT47F001 DD UNIT=SYSDA,SPACE=(&B1,(&NS,1)),
//             DCB=(RECFM=VBST,LRECL=X,BUFNO=&NB1,BLKSIZE=&B1)
//FT48F001 DD UNIT=SYSDA,SPACE=(&B1,(&N1,2)),
//             DCB=(RECFM=VBST,LRECL=X,BUFNO=&NB1,BLKSIZE=&B1)
```

(CONT)

```
//FT49F001 DD UNIT=SYSDA,SPACE=(&B1,(&N11)),
//             DCB=(RECFM=VBST,LRECL=X,BUFNO=&NB1,BLKSIZE=&B1)
//FT50F001 DD UNIT=SYSDA,SPACE=(&B1,(&N1,2)),
//             DCB=(RECFM=VBST,LRECL=X,BUFNO=&NB1,BLKSIZE=&B1)
//FT51F001 DD UNIT=SYSDA,SPACE=(&B1,(&NS,1)),
//             DCB=(RECFM=VBST,LRECL=X,BUFNO=&NB1,BLKSIZE=&B1)
//FT52F001 DD UNIT=SYSDA,SPACE=(&B1,(&NS,1)),
//             DCB=(RECFM=VBST,LRECL=X,BUFNO=&NB1,BLKSIZE=&B1)
//FT53F001 DD UNIT=SYSDA,SPACE=(&B1,(&NS,1)),
//             DCB=(RECFM=VBST,LRECL=X,BUFNO=&NB1,BLKSIZE=&B1)
//FT54F001 DD UNIT=SYSDA,SPACE=(&B1,(&N1,2)),
//             DCB=(RECFM=VBST,LRECL=X,BUFNO=&NB1,BLKSIZE=&B1)
//FT55F001 DD UNIT=SYSDA,SPACE=(&B1,(&NS,1)),
//             DCB=(RECFM=VBST,LRECL=X,BUFNO=&NB1,BLKSIZE=&B1)
//FT56F001 DD UNIT=SYSDA,SPACE=(&B1,(&NS,1)),
//             DCB=(RECFM=VBST,LRECL=X,BUFNO=&NB1,BLKSIZE=&B1)
//FT96F001 DD UNIT=SYSDA,SPACE=(&B1,(&NS,1)),
//             DCB=(RECFM=VBST,LRECL=X,BUFNO=&NB1,BLKSIZE=&B1)
//FT97F001 DD UNIT=SYSDA,SPACE=(&B1,(&NS,1)),
//             DCB=(RECFM=VBST,LRECL=X,BUFNO=&NB1,BLKSIZE=&B1)
//FT98F001 DD UNIT=SYSDA,SPACE=(&B1,(&NS,1)),
//             DCB=(RECFM=VBST,LRECL=X,BUFNO=&NB1,BLKSIZE=&B1)
//FT99F001 DD  SYSOUT=A,DCB=(RECFM=VBA,LRECL=137,BLKSIZE=1100)
//BOLDVENT PEND
```

FIGURE 6. USER SUPPLIED JOB CONTROL INSTRUCTIONS.

```
//UIDXXXXX JOB (CHRGE),'ADRES,NAME COL 25-44',MSGLEVEL=(1,1)
//*CLASS CPU91=10M,IO=50,REGION=600K,LINES=19,CARDS=0
//STEP EXEC BOLDVENT,
// NB1=1,NB2=1,B1=3520,B2=3520,NX=2,NS=50,N1=100,
// N2=1,N3=1,N4=1,N5=1,N6=1,N7=1,N8=1,N9=1,N10=1,N11=1,N12=1,N13=1,
// N14=1,N15=1,N16=1,
// GOSIZE=600K
//GO.FT32F001 DD UNIT=TAPE8,VOLUME=SER=NNNNNN,LABEL=(1,SL,,IN),
// DCB=(RECFM=VBS,LRECL=X,BLKSIZE=3520,DEN=2),DISP=DDD,DSN=SCMI.NAME
//GO.SYSIN DD *
=CONTROL1
*******************TITLE CARD FOR THE RUN*******************
 90000                        10    50     1                    1
  1  2  6  2  7 13  7 13  2  9  0
  RTFLUX
END

INPUT PROCESSOR
COMMENT*****DATA FOR THE INPUT PROCESSOR GOES HERE
END

DCRSPR
COMMENT*****DATA FOR THE SPECIAL INPUT PROCESSOR DCRSPR GOES HERE
END

DVENTR
COMMENT*****DATA FOR THE SPECIAL INPUT PROCESSOR DVENTR GOES HERE
END

DUTLIN
COMMENT*****DATA FOR THE SPECIAL INPUT PROCESSOR DUTLIN GOES HERE
END
/*
//
```

C. PROBLEM DEPENDENT DATA FILE PARAMETERS

Often the data file requirements are governed by those of the neutronics codes, so these parameters have been tailored to satisfy the basic needs of the VENTURE and VALE neutronics code modules. However, there are situations where the requirements are governed by other modules in the system. The user should refer to specific documentation about these requirements. Information about specifying these parameters is given here and Figure 7. presents reference information. (See also APPENDIX A.)

When a file has special requirements, such as for an unusually large amount of disk space, it may be most practical to include override instructions for this unit rather than use the parameters.

B1 and B2 are the sizes in bytes (4 bytes per short word) of core memory blocks into which data are read, limited to 32000. The larger this block size the fewer are the I/O requests required to read a particular data set. B2 defines the block size of the data sets which are read most often during the iterative part of the calculation. NB1 and NB2 (permissible values of 1 or 2) specify the number of buffers (number of blocks of size B1 or B2) of core memory into which data will be stored.

We recommend specifying NB1 = 1, NB2 = 1, B1 = 3520, and B2 = 32000, NX = 2, NS = 50, and N1 = 100. These values will be adequate for most practical problems. We find advantage in using only one buffer as this minimizes core memory requirements. For small problems, it may be desirable to set B2 to something smaller than 32000 to minimize core memory. It is recommended that B1 and B2 not be set smaller than 3520. Values for parameters N2 through N16 are calculated as follows where reference is to the multi-dimensional problem to be solved by the neutronics code:[a]

---

[a] Space requirements are shown for "track overflow"; they increase by a factor equal to the reciprocal of the fraction utilization without this.

Figure 7. Determining the Values of L, N, and B

For	L	N	B	Remarks
N2	8CR 8C	PG RPG	B1	Normally For the "row-stored" mode.
N3	--- 36C+4 44C+12	RPG	B1	Set N3=1 except for the "row-stored" mode. Non-hexagonal geometry. Hexagonal geometry.
N4	--- 8CR 4Z	PG G	B1	Set N4=1 except for fixed source problems. Fixed source by point and group. Fixed source by zone and group.
N5	--- 4(8CR+C+R) 4(9CR+2C+2R)	PG	B2	Set N5=1 for the "row-stored" mode only. Non-hexagonal geometry. Hexagonal geometry.
N6				Set N6=10
N7	8CR	P	B2	
N8	8CR	P	B2	
N9	8CR	P	B1	
N10	8CR	P PG	B1	Normally. If initial flux guess is to be read from RTFLUX interface and to be expanded.
N11	8C	RP	B1	
N12				Set N12=1.
N13	--- 8CR	P	B1	Set N13=1 unless the power density interface PWDINT will be written. For writing the interface PWDINT.
N14	--- 8CR	PG	B1	Set N14=1 unless the P_1 calculation is to be done. For the P_1
N15				Set N15=10.
N16	--- 8CR	PG	B1	Normally N16=1. If the standard flux interfaces RTFLUX and/or ATFLUX are to be written on scratch disc.

Let C = number of columns in the mesh

R = number of rows in the mesh

P = number of planes in the mesh

G = number of energy groups

Z = number of zones

and NN = [(110+1.1L)N]/B + 1

where NN is the value assigned to N2 through N16, and L, N, and B are calculated from the above parameters as shown in Fig. 11 or have set values.

For a non-hexagonal problem running in the "plane stored" mode, with 48 columns, 22 rows, 16 planes, and 6 groups, N2=257, N3=1, N4=1, N5=113, N6=10, N7=5, N8=5, N9=43, N10=43, N11=54, N12=1, N13=1, N14=1, N15=10, and N16=1. Larger Values for these paremeters waste computer resources and likely increase cost.

As a user aid major space requirements for data files are edited by the more sophisticated codes such as VENTURE in this system (see APPENDIX A.).

X. SUPER SAMPLE PROBLEM

The source of this problem is the Large Core Code Evaluation Working Group (LCCEWG) Third Benchmark Problem. It has been changed somewhat from the original specifications for use as a sample problem. The hexagonal three-dimensional geometry and zone placement are shown in Figures 8 and 9, and the depletion transmutation scheme is shown in Figure 10. A description of the module accesses is given in Figure 11. The job control instruction and input are shown in Figure 12, and selected output is shown in Figure 13. The complete output for this problem is included in the source package for the BOLD VENTURE computation system available from the National Energy Software Center (ANL).

The calculational path was chosen to demonstrate the flexibility of calculations that may be done with the BOLD VENTURE system.

The control module is initially accessed by the resident driver in order to read input data and create the file CONTRL and write the records PROINS and DVRINS on this file. After this initial access the control module instructs the driver to access the modules in order.

ORNL–DWG 80-14601R

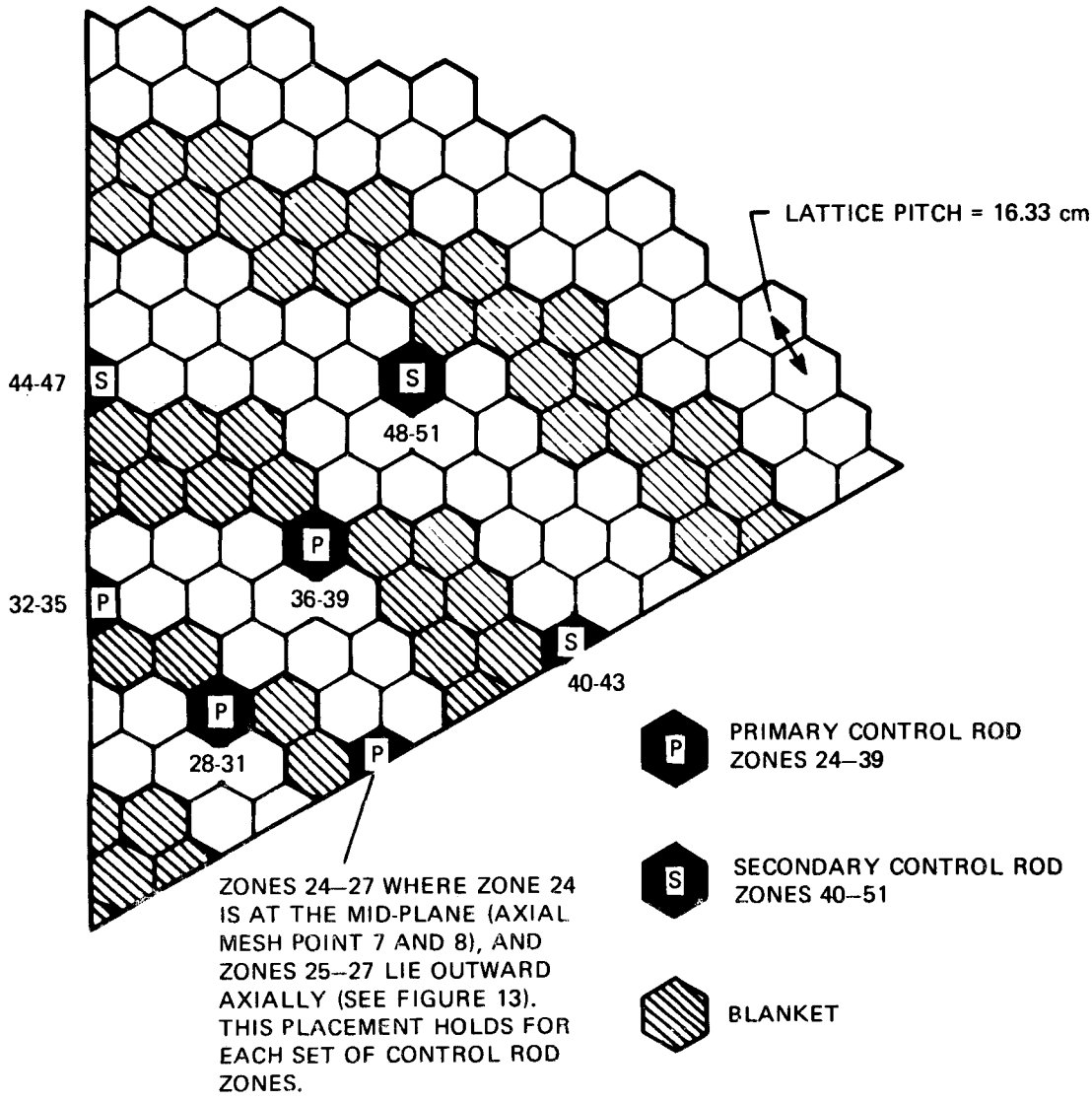

NOTE: SEE FIGURE 13 FOR ZONE PLACEMENT AND DIMENSIONS.

Figure 8. Cross Section Through Core Assemblies

ORNL-DWG 80-14602

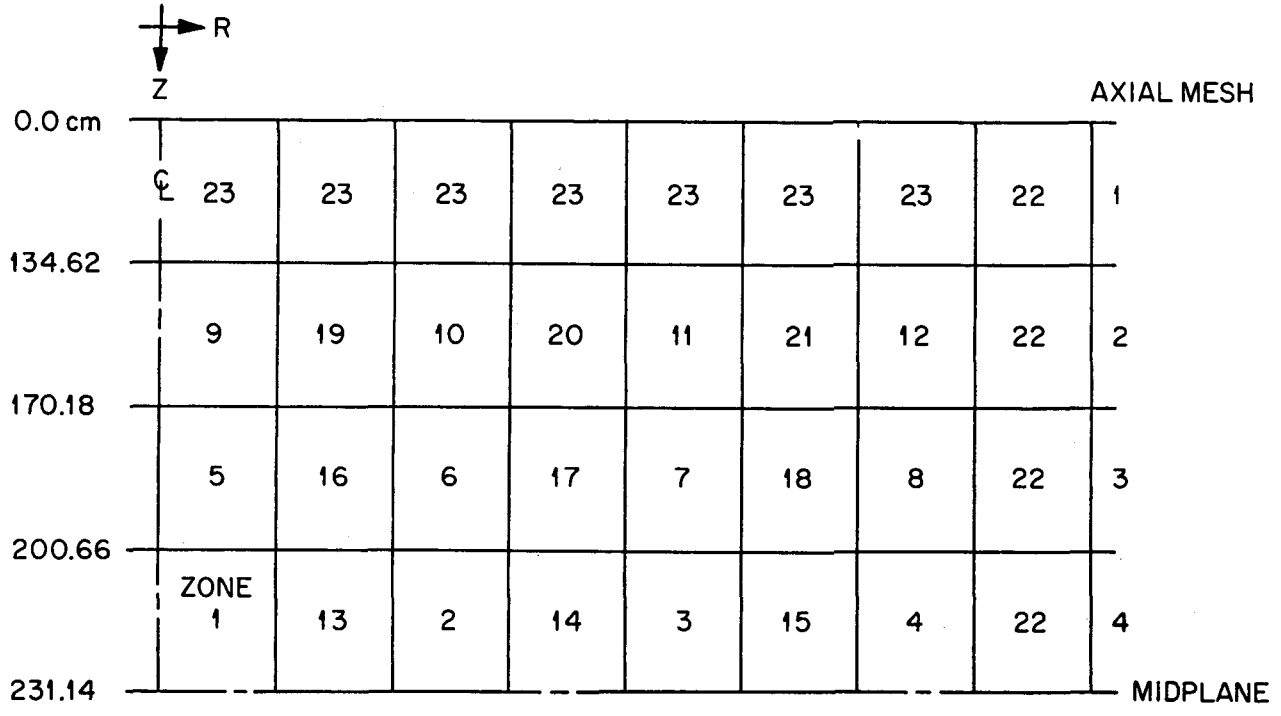

ZONES 1–12 INTERNAL AND RADIAL BLANKET ASSEMBLIES
13–18 FUELED DRIVER ASSEMBLIES
19–21 AXIAL BLANKETS
22 RADIAL SHIELD
23 GAS PLENUM / STRUCTURE

Figure 9. Zone Placement

ORNL – DWG 80–14603

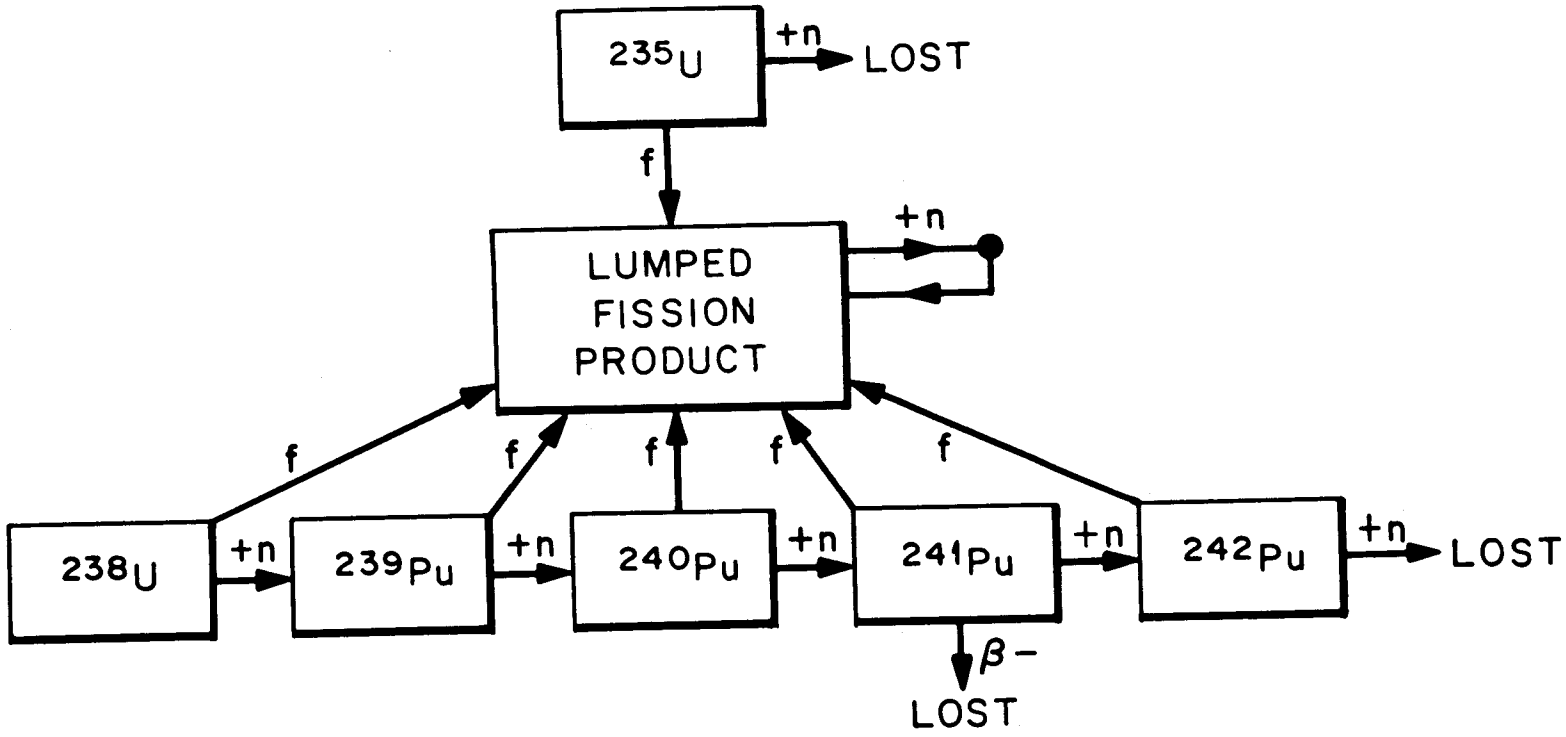

NOTE: NO TRANSMUTATION OF COOLANT OR STRUCTURAL MATERIALS

FIGURE 10. TRANSMUTATION SCHEME

Figure 11. Module Accesses and Results.

Module Access	Results
1	Reads interface files GRUPXS, RODSET, EXPOSE, and REFUEL
2	Reads neutronics instruction and data for files GEODST, NDXSRF, and ZNATDN.
2	Reads control rod positioning and exposure instructions, and fuel management instructions.
12	Inserts control rod material in primary control rod zones 24 through 39.
7	Regular flux-eigenvalue neutronics.
19	Fuel management initilization.
13	Exposure (255.5 days).
2	Reads control rod positioning instructions.
12	Replaces rod material with rod-follower material in control rod zones 24 through 35.
7	Regular flux-eigenvalue neutronics.
13	Exposure (255.5 days).
2	Reads control rod positioning insturctions, neutronics instructions, and perturbation instructions.
12	Removes control rod material from control rod zones 36 through 39 and replaces it with rod-follower material. This is the all-rods-out configuration.
7	Regular and adjoint flux-eigenvalue calculation.
9	Reaction rate calculation.
15	Perturbation calculation.
2	Reads neutronics instructions.

Figure 11. (con't)

Module Access	Results
7	Dominant harmonic adjoint fixed source (peak power density) calculation.
2	Reads control rod positioning and neutronics instructions.
12	Inserts control rod material in all primary control rod zones 24 through 39 and special shutdown rod material in secondary control rod zones 40 through 51. This is the all-rods-in configuration.
7	Regular flux-eigenvalue calculation.
2	Reads control rod positioning instructions and fuel management instructions.
12	Restores all control rod zones 24 through 51 to their original configuration (after the first access to module 12).
19	Refuels the core.
7	Regular flux-eigenvalue calculation.

FIGURE 12. INPUT FOR SUPER SAMPLE PROBLEM.

```
//USERID   JOB (CHARG),'USER ADDRESS          ',MSGLEVEL=(1,1)
//*CLASS CPU91=20M,IO=015,REGION=1500K,LINES=12,CARDS=0
//STEP EXEC BOLDVENT,
// NB1=1,NB2=1,B1=3520,B2=32000,NX=50,NS=136,N1=136,
// N2=135,N3=10,N4=136,N5=60,N6=10,N7=4,N8=4,N9=34,N10=34,N11=41,N12=1,
// N13=136,N14=20,N15=10,N16=136,
// GOSIZE=1500K
//GO.SYSIN DD *
=CONTROL1
 SUPER SAMPLE PROBLEM.
220000                                                                  1
  1  2   2 12   7 19 13   2 12   7 13   2 12   7   9 15   2   7   2 12   7   2 12 19
  7  0
END
 INPUT DATA PROCESSOR.
 OV GRUPXS          $ORNL M  ADE      $
 1D        4      49       0       3       0       1     343       0      3R
      1      2R       0      2R
  2D /
     *LCCEWG METHODS BENCHMARK PROBLEM 3 LIBRARY - R PROTSIK (GE-A*
     *RSD)         A0816 A1123 A2400 A2555 A2600 A2800 A4200 A9235 *
     *A9236 A9238 A9439 A9440 A9441 A9442 A9999 B0816 B1123 B2400 *
     *B2555 B2600 B2800 B4200 B9235 B9236 B9238 B9439 B9440 B9441 *
     *B9442 B9999 I0510II0511II0600II11230I24000I25550I26000I28000*
     *I42000Q1123 Q2400 Q2555 Q2600 Q2800 Q4200 U23X  PU24X AM24X *
     *CUFISS*
 7.68547E-01 2.24484E-01 6.93373E-03 3.54065E-05 1.79858E 09 6.27404E 08
 1.84270E 08 4.27109E 07 2.00000E 07 8.20850E 05 6.73794E 04 2.03468E 03
 1.06770E 01
  4D /
     *O16   NA23  CR    MN55  FE    NI    MO    U235  U236  U238  *
     *PU239 PU240 PU241 PU242 FP    O16   NA23  CR    MN55  FE    *
     *NI    MO    U235  U236  U238  PU239 PU240 PU241 PU242 FP    *
     *B10   B11   C     NA23  CR    MN55  FE    NI    MO    NA23  *
     *CR    MN55  FE    NI    MO    U23X  PU24X AM24X CUFISSENEFB5*
     *ENEFB5ENEFB5ENEFB5ENDFB5ENEFB5ENEFB5ENEFB5ENEFB5ENEFB5*
     *ENEFB5ENEFB5ENEFB5ENEFB5ENEFB5ENEFB5ENEFB5ENEFB5ENDFB5ENEFB5*
     *ENEFB5ENEFB5ENEFB5ENEFB5ENEFB5ENEFB5ENEFB5ENEFB5ENEFB5ENEFB5*
     *ENEFB5ENEFB5ENEFB5ENEFB5ENEFB5ENDFB5ENEFB5ENEFB5ENEFB5ENEFB5*
     *ENEFB5ENDFB5ENEFB5ENEFB5EXTRA1EXTRA2EXTRA3EXTRA4A0816 A1123 *
     *A2400 A2555 A2600 A2800 A4200 A9235 A9236 A9238 A9439 A9440 *
     *A9441 A9442 A9999 B0816 B1123 B2400 B2555 B2600 B2800 B4200 *
     *B9235 B9236 B9238 B9439 B9440 B9441 B9442 B9999 I0510II0511I*
     *I0600II11230I24000I25550I26000I28000I42000Q1123 Q2400 Q2555 *
     *Q2600 Q2800 Q4200 U23X  PU24X AM24X CUFISS*
 1.59950E 01 2.29900E 01 5.19960E 01 5.49380E 01 5.58470E 01 5.87000E 01
 9.59400E 01 2.35040E 02 2.36050E 02 2.38050E 02 2.39050E 02 2.40050E 02
 2.41060E 02 2.42060E 02 2.36000E 02 1.59950E 01 2.29900E 01 5.19960E 01
 5.49380E 01 5.58470E 01 5.87000E 01 9.59400E 01 2.35040E 02 2.36050E 02
 2.38050E 02 2.39050E 02 2.40050E 02 2.41060E 02 2.42060E 02 2.36000E 02
 1.00130E 01 1.10090E 01 1.20000E 01 2.29900E 01 5.19960E 01 5.49380E 01
 5.58470E 01 5.87000E 01 9.59400E 01 2.29900E 01 5.19960E 01 5.49380E 01
```

(CONT)

```
5.58470E 01 5.87000E 01 9.59400E 01 236.0 243.0 241.0 115.0
 0.0 7R  3.10840E-11
3.08880E-11 3.17410E-11 3.20500E-11 3.20090E-11 3.23980E-11 3.21400E-11
0.0              8R   3.10840E-11 3.08880E-11 3.17410E-11 3.20500E-11
3.20090E-11 3.23980E-11 3.21400E-11 0.0             20R   6.63650E-13
1.86660E-12 1.48010E-12 1.16500E-12 1.25140E-12 1.48810E-12 1.36310E-12
1.04700E-12 8.77300E-13 9.22199E-13 1.04700E-12 8.39600E-13 1.00900E-12
8.84000E-13 1.36310E-12 6.63650E-13 1.86660E-12 1.48010E-12 1.16500E-12
1.25140E-12 1.48810E-12 1.36310E-12 1.04700E-12 8.77300E-13 9.22199E-13
1.04700E-12 8.39600E-13 1.00900E-12 8.84000E-13 1.36310E-12 1.83540E-12
1.58580E-12 7.92470E-13 1.86660E-12 1.48010E-12 1.16500E-12 1.25140E-12
1.48810E-12 1.36310E-12 1.86660E-12 1.48010E-12 1.16500E-12 1.25140E-12
1.48810E-12 1.36310E-12 0.0             53R   1.20000E 03
6.87000E 02      6R   1.20000E 03      8R   1.50000E 03
7.07000E 02      6R   1.50000E 03      8R   6.87000E 02      9R
6.94000E 02      6R   0.0             53R   2.71760E-02 6.24010E-03
2.37560E-03 2.25280E-04 8.19940E-03 1.62660E-03 1.84310E-04 2.99070E-05
1.00000E-15 1.35580E-02 1.00000E-15      5R   2.14600E-02 8.22170E-03
2.81110E-03 2.66090E-04 9.68140E-03 1.92070E-03 2.17640E-04 1.91680E-05
1.00000E-15 8.69120E-03 1.35910E-03 4.07890E-04 2.03920E-04 4.84810E-05
1.00000E-15 2.91100E-02 2.53100E-03 8.27000E-03 1.84200E-02 1.39800E-03
1.32400E-04 4.81700E-03 9.55200E-04 1.08200E-04 8.22170E-03 2.81110E-03
2.66090E-04 9.68140E-03 1.92070E-03 2.17640E-04 0.0              4R
     5      6      5      5R      1      3      2      1      2      1
     3      4      5      6      5     5R      1      3      2      1
     2      1      3      4      7     3R      6      5     5R      6
     5     5R      0      5R      1      0     51R      1      0     4R
5D  1.99890E 00 1.92704E 00 2.45424E 00 2.55688E 00 2.14954E 00
2.39491E 00 3.64786E 00 4.56063E 00 4.93314E 00 4.66772E 00 4.84598E 00
4.81540E 00 4.68358E 00 4.41728E 00 7.30388E 00 2.01269E 00 1.90309E 00
2.44095E 00 2.54702E 00 2.14285E 00 2.38536E 00 3.62243E 00 4.54174E 00
4.91560E 00 4.65245E 00 4.82885E 00 4.79593E 00 4.66575E 00 4.39989E 00
7.25295E 00 1.81763E 00 1.81236E 00 1.82288E 00 1.90474E 00 2.43921E 00
2.57681E 00 2.11488E 00 2.40155E 00 3.68775E 00 2.05845E 00 2.42806E 00
2.68008E 00 1.99070E 00 2.45525E 00 3.92874E 00 0.0             53R
6.83360E-03 2.09867E-03 1.30296E-02 2.70244E-03 7.30134E-03 7.02621E-02
2.37418E-02 7.15843E-02 1.80054E-01 6.63795E-02 1.41505E-02 6.78564E-02
9.60922E-02 5.96234E-02 5.57571E-02 7.70198E-03 2.32282E-03 1.29944E-02
2.74872E-03 7.71060E-03 7.55835E-02 2.32178E-02 6.96998E-02 1.74008E-01
6.42257E-02 1.35586E-02 6.59444E-02 9.48349E-02 5.77250E-02 5.46478E-02
2.80822E-01 4.55313E-05 1.21249E-03 2.14850E-03 1.29044E-02 2.70630E-03
7.36601E-03 7.14396E-02 2.35471E-02 1.18448E-03 1.27860E-02 2.49180E-03
5.36083E-03 4.61431E-02 2.58799E-02 0.0             11R   1.22938E 00
6.84863E-01 3.12990E-01 1.84190E 00 1.59248E 00 1.59401E 00 1.37590E 00
0.0              8R   1.23005E 00 6.97134E-01 3.24962E-01 1.84360E 00
1.59800E 00 1.59248E 00 1.37890E 00 0.0             27R   2.66203E 00
5.92117E-02 2.77752E 00 3.19351E 00 3.12616E 00 3.19371E 00 3.12475E 00
0.0              8R   2.67129E 00 6.48412E-02 2.78681E 00 3.20449E 00
3.13675E 00 3.20401E 00 3.13553E 00 0.0             70R   4.19130E-06
2.14787E-04 1.97639E-04 6.33157E-05 3.03555E-05 3.04488E-03 6.96460E-03
7.75878E-03 1.44571E-02 2.93013E-03 1.38667E-03 1.86431E-02 6.04002E-03
6.08976E-03 0.0         5.65298E-06 2.57976E-04 2.52210E-04 8.59307E-05
3.93456E-05 3.55995E-03 7.75121E-03 8.75387E-03 1.62350E-02 3.27505E-03
1.57583E-03 2.05569E-02 6.82002E-03 7.11990E-03 0.0         2.54785E-06
```

(CONT)

```
0.0          4.84241E-06 2.30146E-04 2.19610E-04 7.29992E-05 3.40361E-05
3.21134E-03 2.02950E-06 1.04143E-04 9.08367E-05 2.89471E-05 1.40313E-05
1.48504E-03 0.0              4R
5D  3.65272E 00 3.47699E 00 4.07732E 00 4.83003E 00 3.32618E 00
4.98389E 00 7.28194E 00 8.24222E 00 9.78234E 00 8.45247E 00 8.15983E 00
8.00033E 00 8.65788E 00 8.74469E 00 1.46488E 01 3.64817E 00 3.45132E 00
3.88049E 00 4.58248E 00 3.15227E 00 4.78064E 00 7.14361E 00 7.98489E 00
9.43121E 00 8.23848E 00 7.92267E 00 7.76749E 00 8.39955E 00 8.46832E 00
1.43659E 01 4.15261E 00 3.36030E 00 3.48327E 00 3.30021E 00 3.92539E 00
4.81600E 00 2.97001E 00 4.93252E 00 7.29962E 00 3.35549E 00 3.58039E 00
5.57957E 00 2.59634E 00 5.20355E 00 7.53530E 00 0.0             53R
6.59909E-08 5.75767E-04 7.68881E-03 8.10028E-03 7.92032E-03 1.19514E-02
5.95523E-02 3.12124E-01 3.10778E-01 1.51679E-01 1.96724E-01 2.61229E-01
2.44037E-01 1.92711E-01 2.06356E-01 6.29308E-08 5.56645E-04 7.92812E-03
7.68061E-03 7.49171E-03 1.14453E-02 5.78160E-02 2.96237E-01 3.06501E-01
1.46773E-01 1.86298E-01 2.47782E-01 2.32298E-01 1.84540E-01 1.95082E-01
1.22989E 00 3.54285E-06 9.64006E-07 4.72270E-04 7.61275E-03 7.89781E-03
7.10034E-03 1.16894E-02 5.86774E-02 5.10540E-04 6.91658E-03 8.97830E-03
6.79483E-03 1.28958E-02 6.31849E-02 0.0             11R   1.38517E 00
9.65957E-03 3.31126E-04 1.56236E 00 2.24007E-01 1.86304E 00 1.20899E-01
0.0             8R   1.36079E 00 1.16440E-02 3.98743E-04 1.56523E 00
2.55871E-01 1.82813E 00 1.43429E-01 0.0             27R   2.45817E 00
0.0          2.47530E 00 2.91529E 00 2.87809E 00 2.95634E 00 2.88293E 00
0.0             8R   2.46066E 00 0.0          2.47805E 00 2.91937E 00
2.88252E 00 2.95729E 00 2.88612E 00 0.0           118R
5D  3.60523E 00 5.92490E 00 7.62188E 00 1.99755E 01 5.80402E 00
1.86230E 01 8.46395E 00 1.44766E 01 1.55698E 01 1.30403E 01 1.35599E 01
1.39858E 01 1.46983E 01 1.38405E 01 1.74573E 01 3.60624E 00 5.27682E 00
6.93478E 00 1.74379E 01 5.52197E 00 1.76604E 01 8.41375E 00 1.42588E 01
1.54280E 01 1.33481E 01 1.33416E 01 1.37283E 01 1.44405E 01 1.36687E 01
1.73477E 01 5.61215E 00 4.62335E 00 4.33089E 00 4.83590E 00 6.74104E 00
1.67156E 01 5.20898E 00 1.78660E 01 8.30950E 00 5.03997E 00 6.41360E 00
1.70658E 01 4.18280E 00 1.73955E 01 8.06349E 00 0.0             53R
2.26537E-07 3.72681E-03 3.62189E-02 5.28318E-02 1.19967E-02 4.90111E-02
2.53256E-01 9.55944E-01 8.59953E-01 5.27642E-01 8.90982E-01 9.33404E-01
7.74167E-01 8.35385E-01 8.00672E-01 2.14591E-07 2.82761E-03 3.47219E-02
4.76996E-02 1.19132E-02 4.81097E-02 2.37329E-01 9.15403E-01 8.26488E-01
5.25070E-01 8.25009E-01 8.87429E-01 7.36710E-01 7.96772E-01 7.58890E-01
3.77461E 00 9.73079E-05 1.50325E-06 2.46043E-03 3.51054E-02 4.92155E-02
1.11296E-02 4.83555E-02 2.39876E-01 3.31235E-03 3.88882E-02 5.74162E-02
1.06270E-02 5.01548E-02 2.67620E-01 0.0             11R   2.50619E 00
1.10296E-02 7.26735E-05 1.83982E 00 7.46269E-02 3.30644E 00 1.32710E-02
0.0             8R   2.41224E 00 1.04782E-02 7.37687E-05 1.80322E 00
7.49671E-02 3.18410E 00 1.30887E-02 0.0             27R   2.43985E 00
0.0          2.41796E 00 2.88293E 00 2.78818E 00 2.95300E 00 2.79878E 00
0.0             8R   2.43980E 00 0.0          2.41779E 00 2.88254E 00
2.79306E 00 2.95300E 00 2.79907E 00 0.0           118R
5D  3.59099E 00 4.66007E 00 5.19548E 00 6.39179E 01 9.31532E 00
1.69765E 01 1.07228E 01 2.81033E 01 2.99515E 01 1.14781E 01 2.99353E 01
2.73885E 01 2.98528E 01 2.66545E 01 2.56228E 01 3.59106E 00 5.03421E 00
5.33568E 00 5.39541E 01 8.99846E 00 1.67997E 01 1.01097E 01 2.50550E 01
2.68403E 01 1.22939E 01 2.28705E 01 2.15306E 01 2.65165E 01 2.20928E 01
2.45477E 01 1.93550E 01 4.72458E 00 4.46692E 00 4.65995E 00 5.22683E 00
5.23532E 01 9.16957E 00 1.69027E 01 9.74739E 00 3.84245E 00 4.92232E 00
```

(CONT)

```
4.40809E 01 9.92313E 00 1.73316E 01 1.12325E 01 0.0             53R
1.10921E-06 8.77955E-03 8.88854E-02 1.58933E 00 7.53801E-02 3.06525E-02
1.48834E 00 4.91808E 00 5.12055E 00 1.13308E 00 7.25821E 00 6.75800E 00
3.99741E 00 4.37652E 00 4.77607E 00 9.24147E-07 9.30639E-03 1.06544E-01
1.16339E 00 7.97549E-02 2.62826E-02 1.08858E 00 3.92869E 00 3.78433E 00
1.27442E 00 4.92165E 00 4.30556E 00 3.28757E 00 3.03575E 00 3.71075E 00
1.84090E 01 2.44667E-05 1.80831E-05 9.02932E-03 9.80089E-02 1.22320E 00
6.27835E-02 2.77707E-02 1.13615E 00 8.26861E-03 6.09411E-02 1.60208E 00
4.24104E-02 4.34292E-02 2.32302E 00 0.0              11R   1.09143E 01
8.05157E-02 4.01164E-04 8.64163E 00 1.84696E-01 1.35518E 01 3.28719E-02
0.0              8R   8.95437E 00 5.69686E-02 4.44302E-04 5.91793E 00
1.98184E-01 1.11515E 01 2.81951E-02 0.0              27R   2.44483E 00
0.0          2.41366E 00 2.88278E 00 2.80320E 00 2.95300E 00 2.79511E 00
0.0              8R   2.44584E 00 0.0          2.41366E 00 2.88439E 00
2.80321E 00 2.95300E 00 2.79514E 00 0.0             118R
7D        1    98R
8D  1.53822E 00 1.48818E 00 2.15711E 00 2.17747E 00 1.75145E 00
2.02499E 00 2.85207E 00 2.46524E 00 2.51446E 00 2.95651E 00 2.15778E 00
2.39152E 00 2.23825E 00 1.96593E 00 5.70281E 00 1.58646E 00 1.50398E 00
2.15277E 00 2.18565E 00 1.75414E 00 2.01968E 00 2.84652E 00 2.46205E 00
2.49470E 00 2.95056E 00 2.14704E 00 2.37794E 00 2.23639E 00 1.94927E 00
5.69705E 00 1.15622E 00 1.49201E 00 1.48638E 00 1.48821E 00 2.14231E 00
2.20454E 00 1.71665E 00 2.03016E 00 2.89229E 00 1.57466E 00 2.13345E 00
2.29511E 00 1.57777E 00 2.11578E 00 3.09005E 00 0.0              4R
7D        2    49R       1    49R
8D  3.42037E 00 4.53835E-01 3.32081E 00 4.35973E-01 4.00902E 00
2.78679E-01 4.68273E 00 3.67465E-01 3.28885E 00 3.76215E-01 4.77439E 00
2.91386E-01 7.13499E 00 7.60733E-01 6.41785E 00 7.92322E-01 9.29517E 00
1.50863E 00 8.13821E 00 1.32310E 00 6.30993E 00 8.18348E-01 7.34497E 00
7.55283E-01 6.35921E 00 7.66967E-01 8.25147E 00 9.90449E-01 1.42687E 01
1.52269E 00 3.46026E 00 4.18525E-01 3.32611E 00 3.95982E-01 3.82454E 00
2.69820E-01 4.46098E 00 3.49448E-01 3.12229E 00 3.67781E-01 4.61274E 00
2.81727E-01 7.01342E 00 7.42293E-01 6.21839E 00 7.78299E-01 8.97505E 00
1.50468E 00 7.95626E 00 1.30534E 00 6.09227E 00 8.11231E-01 7.12300E 00
7.45768E-01 6.17235E 00 7.55327E-01 7.99198E 00 9.90008E-01 1.40287E 01
1.48047E 00 2.75002E 00 3.80526E-01 3.08183E 00 3.20260E-01 3.23240E 00
3.35260E-01 3.16062E 00 4.13581E-01 3.86389E 00 2.78522E-01 4.68229E 00
3.60257E-01 2.94078E 00 3.77339E-01 4.74548E 00 2.91532E-01 7.16191E 00
7.60956E-01 3.13044E 00 4.81928E-01 3.49172E 00 2.75799E-01 5.39476E 00
3.72319E-01 2.56107E 00 3.92650E-01 4.92785E 00 2.84900E-01 7.36303E 00
7.98593E-01 0.0              8R
7D        3    49R       1    49R
8D  3.55796E 00 2.32349E-01 2.80349E-06 5.70938E 00 1.55604E-01
7.91971E-04 7.55520E 00 6.06097E-02 5.61859E-03 1.90891E 01 1.39186E-01
9.40470E-03 5.76054E 00 2.94145E-02 1.45492E-02 1.85099E 01 1.97544E-01
8.29020E-03 8.18664E 00 8.73969E-02 1.43577E-02 1.10020E 01 1.27021E-01
9.06608E-03 1.46829E 01 1.66725E-01 5.28314E-02 1.25029E 01 1.62242E-01
2.31771E-02 1.08142E 01 9.07785E-02 1.67205E-02 1.29632E 01 1.70105E-01
9.63361E-03 1.06058E 01 1.91564E-01 6.90648E-03 1.29760E 01 1.79605E-01
3.13916E-02 1.66003E 01 1.73784E-01 2.87154E-02 3.57202E 00 1.87914E-01
3.09013E-06 5.12226E 00 1.24653E-01 8.10600E-04 6.87778E 00 4.80201E-02
5.60551E-03 1.67809E 01 1.13810E-01 9.39559E-03 5.48704E 00 2.24886E-02
1.32209E-02 1.75654E 01 1.56445E-01 8.39580E-03 8.15885E 00 7.23733E-02
1.39539E-02 1.09220E 01 1.09434E-01 9.39037E-03 1.45792E 01 1.38018E-01
```

(CONT)

```
 5.37625E-02 1.28153E 01 1.35043E-01 2.35801E-02 1.07016E 01 7.88319E-02
 1.66781E-02 1.27548E 01 1.40832E-01 9.85406E-03 1.05104E 01 1.66746E-01
 7.27734E-03 1.28467E 01 1.48367E-01 3.07730E-02 1.65465E 01 1.42159E-01
 2.79079E-02 1.83259E 00 1.72699E-01 6.59895E-05 4.61164E 00 2.78462E-01
 4.80959E-05 4.32051E 00 2.50864E-01 2.50391E-05 4.66039E 00 1.39110E-01
 7.99498E-04 6.68019E 00 5.38869E-02 5.68042E-03 1.59615E 01 1.25804E-01
 9.49651E-03 5.17131E 00 2.21326E-02 1.35072E-02 1.77636E 01 1.75345E-01
 8.43311E-03 8.04948E 00 7.90321E-02 1.41743E-02 4.77182E 00 2.24534E-01
 6.76826E-04 6.33451E 00 8.17550E-02 6.10172E-03 1.59274E 01 1.75826E-01
 1.02113E-02 4.13062E 00 2.84695E-02 1.48627E-02 1.72606E 01 2.62799E-01
 8.42294E-03 7.76545E 00 1.09085E-01 1.57036E-02 0.0            12R
 7D        4    49R       1    49R
 8D  3.59099E 00 4.72717E-02 0.0          5.25143E-09 4.65129E 00
 2.11795E-01 3.37315E-07 1.68745E-06 5.10659E 00 3.04639E-02 7.89664E-08
 1.89423E-05 6.23286E 01 8.33587E-01 8.04894E-06 3.29110E-05 9.23994E 00
 3.14764E-02 0.0         9.09308E-05 1.69459E 01 6.41472E-02 3.29700E-06
 1.76382E-05 9.23443E 00 2.40519E-02 0.0              2R   1.22709E 01
 1.24933E-02 5.12001E-05 9.62866E-06 2.47504E 01 1.59440E-02 3.24054E-06
 6.34491E-05 1.03446E 01 9.68194E-03 2.80145E-06 2.32678E-05 1.40355E 01
 1.48499E-02 4.02349E-05 1.69613E-05 2.04458E 01 1.46350E-02 1.20056E-05
 1.00282E-05 1.23037E 01 1.18938E-02 3.24537E-05 1.53500E-06 2.22451E 01
 1.57731E-02 2.36674E-06 3.21445E-05 2.08467E 01 5.62957E-02
 0.0              2R   3.59106E 00 3.42218E-02 0.0         5.80045E-09
 5.02491E 00 1.51736E-01 3.92652E-07 1.74704E-06 5.22914E 00 2.22766E-02
 1.06019E-07 1.92725E-05 5.27907E 01 6.09337E-01 7.31419E-06 3.28378E-05
 8.91871E 00 2.30152E-02 0.0         8.66160E-05 1.67734E 01 4.69016E-02
 2.78263E-06 1.74905E-05 9.02116E 00 1.75663E-02 0.0              2R
 1.21719E 01 9.18698E-03 4.58438E-05 9.96764E-06 2.29990E 01 1.18223E-02
 3.62279E-06 6.39271E-05 1.10190E 01 7.70813E-03 3.22155E-06 2.36377E-05
 1.20309E 01 1.17397E-02 3.93276E-05 1.70086E-05 1.70268E 01 1.10873E-02
 1.17401E-05 1.01347E-05 1.20774E 01 9.27832E-03 3.00412E-05 1.37089E-06
 1.90289E 01 1.21727E-02 2.94078E-06 3.18392E-05 2.08370E 01 4.22432E-02
 0.0              2R   9.45946E-01 4.94540E-03 2.42349E-09 1.78763E-07
 4.72455E 00 1.16187E-02 0.0         1.27401E-07 4.46691E 00 1.03767E-02
 0.0         5.69301E-08 4.65092E 00 1.73046E-01 3.81898E-07 1.72673E-06
 5.12882E 00 2.57482E-02 8.55972E-08 1.95784E-05 5.11300E 01 7.04889E-01
 7.77639E-06 3.33695E-05 9.10679E 00 2.65403E-02 0.0         8.59732E-05
 1.68749E 01 5.40047E-02 3.02511E-06 1.77346E-05 8.61124E 00 2.01417E-02
 0.0              2R   3.83418E 00 2.64830E-01 3.53197E-07 1.51817E-06
 4.86138E 00 4.02034E-02 3.15473E-08 2.41874E-05 4.24788E 01 1.08098E 00
 1.07388E-05 3.75005E-05 9.88072E 00 4.15554E-02 0.0         7.89677E-05
 1.72882E 01 8.47089E-02 5.05693E-06 1.87621E-05 8.90944E 00 3.04242E-02
 0.0             18R
0V RODSET
1D
 $NCRN NFRN NCR NERT NSRPS NCYD NSE NOE ISV MRW MRI NSH I1$
   3    6    7   35    4    1    0   0   0   0   0  12   0 8R
2D  $HNR, HNF, ADR, ADF$
 *I0510I* *I0511I* *I0600I*
 *I11230* *I24000* *I25550* *I26000* *I28000* *I42000*
 2.9110-2  2.5310-3  8.2700-3
 1.8420-2  1.3980-3  1.3240-4  4.8170-3  9.5520-4  1.0820-4
3D  $NRZ$
 27 26 25 24 0  31 30 29 28 0  35 34 33 32 0  39 38 37 36 0
```

(CONT)

```
 43 42 41 40 0  47 46 45 44 0  51 50 49 48 0
4D  $FEH, NOP, J1$  0.0   0   0 10R
5D  $NZI$   24 28 32 36  0  0  0
4D  $FEH, NOP, J1$  0.0   1   0 10R
5D  $NZI$   +4 +4 +4 0  0  0  0
4D  $FEH, NOP, J1$  0.0   1   0 10R
5D  $NZI$   0  0  0 +4  0  0  0
4D  $FEH, NOP, J1$  0.0   0   0 10R
5D  $NZI$   24 28 32 36  0  0  0
8D  $NSH$  40 41 42 43 44 45 46 47 48 49 50 51
9D  $SHR$   3.0-2  2.5-3  8.0-3
9D  $SHR$   3.0-2  2.5-3  8.0-3
9D  $SHR$   3.0-2  2.5-3  8.0-3
9D  $SHR$   3.0-2  2.5-3  8.0-3
9D  $SHR$   3.0-2  2.5-3  8.0-3
9D  $SHR$   3.0-2  2.5-3  8.0-3
9D  $SHR$   3.0-2  2.5-3  8.0-3
9D  $SHR$   3.0-2  2.5-3  8.0-3
9D  $SHR$   3.0-2  2.5-3  8.0-3
9D  $SHR$   3.0-2  2.5-3  8.0-3
9D  $SHR$   3.0-2  2.5-3  8.0-3
9D  $SHR$   3.0-2  2.5-3  8.0-3
0V EXPOSE
1D
$NEXP1 NISOE NAMOPT NYER NGER NFSLR NFPR NDCYR NEXP9 NEXP10 NEXP11$
 11111  11     0    1     0    6     2     1     0     0      0
$NMATXE LSEXCH LBEXCH NEXP15 NOEDCY NOEFIS NOECAP NEXP19 NEXP20$
   8      0      31     0      0      0      0      0      0
2D  $TITLE, HNUC$
* SUPER SAMPLE PROBLEM EXPOSURE DATA - INTERFACE FILE EXPOSE          *
 *U235  * *U238  * *PU239 * *PU240 * *PU241 * *PU242 * *FP    * *U23X  *
 *PU24X * *AM24X * *CUFISS*
3D  $YER, IFSLR, IFPR, IDCYR$  0.0   1 2 3 4 5 6   7 11   5
4D  $ALMDA$  1.493056-9
5D  $YFFP$  1. 1. 1. 1. 1. 1.   1. 1. 1. 1. 1. 1.
6D  $MATXE$  1 8 2  2 3 2  3 4 2  4 5 2  5 6 2  6 9 2  5 10 1  7 7 9
8D  $NBXCH$
    1 +2 8 0
    2 +2 3 +2 4 +2 5 +1 10 0
    2 +2 3 +2 4 +2 5 +2 6 +2 9 0
    7 +2 7 0 0
0V REFUEL
1D
 $NNZ NNX NNR NNO NQM NID NTS  NQ NFFB MNFF NFSB MNFS NFDB$
   0   0   19  0   0   0   0   0   3   19    1   19    1
 $MNFD NFMS NEC NFDDB NI(3)$
   19    1   0    0     0 3R
2D
 $HFM(NNR)$
   *O16   * *NA23  * *CR    * *MN55  * *FE    * *NI    * *MO    *
   *U235  * *U236  * *U238  * *PU239 * *PU240 * *PU241 * *PU242 *
   *FP    * *U23X  * *PU24X * *AM24X * *CUFISS*
 $PLF(NNR)$  0.0 19R
 $PLF(NNR)$  0.0 19R
```

(CONT)

```
 $FQ(NNR),NQ(NNR)$  0.0 19R  0 19R
4D
 $NFN(MNFF),NFFB)$
   1 2 3 4 5 6 7 8 9 10 11 12 13 14 15 16 17 18 19
   1 2 3 4 5 6 7 8 9 10 11 12 13 14 15 16 17 18 19
   1 2 3 4 5 6 7 8 9 10 11 12 13 14 15 16 17 18 19
 $ADB(MNFF,NFFB)$
   2.146-2    8.2217-3  2.8111-3  2.6609-4
   9.6814-3   1.9207-3  2.1764-4  2.7953-5
   0.0        1.2673-2  0.0 9R
   2.146-2    8.2217-3  2.8111-3  2.6609-4
   9.6814-3   1.9207-3  2.1764-4  1.9168-5
   0.0        8.6912-3  1.3591-3  4.0789-4
   2.0392-4   4.8481-5  0.0  5R
   2.146-2    8.2217-3  2.8111-3  2.6609-4
   9.6814-3   1.9207-3  2.1764-4  1.9168-5
   0.0        8.6912-3  1.3591-3  4.0789-4
   2.0392-4   4.8481-5  0.0  5R
5D
 $NSPN(MNFS,NFSB)$
   1 2 3 4 5 6 7 8 9 10 11 12 13 14 15 16 17 18 19
 $NDN(MNFD,NFDB)$
   1 2 3 4 5 6 7 8 9 10 11 12 13 14 15 16 17 18 19
6D
 $RVF(NFSB,NFDB)$  1.0
 $NEMO(NFDB)$  0
7D
 $NFST NZS ISZN NFMO JI(16)$
    3   3    0    0    0 16R
8D
 $NFB(NFST)  $  1  2  3
 $NFBR(NFST)$  0  0  0
 $NSB(NFST)  $  0  0  0
 $NDB(NFST)  $  1  1  1
 $NFD(NFST)  $  0  0  0
 $NZ(NZS,NFST)$  21 20 19   18 17 16   15 14 13
STOP
END
DVENTR
001
                                        2.55620+9   1.0        0.08333333
 0.0
 0.0
  1
  1  0  0  0  0                  0  0        1  0  1
003
 17  1  2  1  2  2  1            1  1
 52
004
 50 235.7032
 25 235.7032
  1 134.62    1 35.56     1 30.48     1 30.48
005
 52
 52
```

(CONT)

```
52
52
006
  1
  1   7   1   1   4   4   1   6   2   2   4   4   1   5   3   3   4   4
  1   1   4   4   4   4   0
  2
 14  16   1   1   4   4  13  15   2   2   4   4  12  14   3   3   4   4
 11  13   4   4   4   4   6   8   6   6   4   4   2   7   7   7   4   4
  1   3   8   8   4   4   0
  3
 23  28   1   1   4   4  22  27   2   2   4   4  21  26   3   3   4   4
 20  25   4   4   4   4  19  24   5   5   4   4  18  23   6   6   4   4
 17  19   7   7   4   4  12  14   9   9   4   4   8  13  10  10   4   4
  4  12  11  11   4   4   1  11  12  12   4   4   1   7  13  13   4   4
  1   3  14  14   4   4   0
  4
 38  43   1   1   4   4  37  42   2   2   4   4  36  41   3   3   4   4
 35  40   4   4   4   4  34  39   5   5   4   4  30  35   6   6   4   4
 29  34   7   7   4   4  28  33   8   8   4   4  27  32   9   9   4   4
 26  31  10  10   4   4  22  27  11  11   4   4  21  26  12  12   4   4
 20  25  13  13   4   4  16  21  14  14   4   4  12  20  15  15   4   4
 11  19  16  16   4   4  10  15  17  17   4   4   6  11  18  18   4   4
  2  10  19  19   4   4   1   9  20  20   4   4   1   5  21  21   4   4
  1   1  22  22   4   4   0
  5
  1   7   1   1   3   3   1   6   2   2   3   3   1   5   3   3   3   3
  1   1   4   4   3   3   0
  6
 14  16   1   1   3   3  13  15   2   2   3   3  12  14   3   3   3   3
 11  13   4   4   3   3   6   8   6   6   3   3   2   7   7   7   3   3
  1   3   8   8   3   3   0
  7
 23  28   1   1   3   3  22  27   2   2   3   3  21  26   3   3   3   3
 20  25   4   4   3   3  19  24   5   5   3   3  18  23   6   6   3   3
 17  19   7   7   3   3  12  14   9   9   3   3   8  13  10  10   3   3
  4  12  11  11   3   3   1  11  12  12   3   3   1   7  13  13   3   3
  1   3  14  14   3   3   0
  8
 38  43   1   1   3   3  37  42   2   2   3   3  36  41   3   3   3   3
 35  40   4   4   3   3  34  39   5   5   3   3  30  35   6   6   3   3
 29  34   7   7   3   3  28  33   8   8   3   3  27  32   9   9   3   3
 26  31  10  10   3   3  22  27  11  11   3   3  21  26  12  12   3   3
 20  25  13  13   3   3  16  21  14  14   3   3  12  20  15  15   3   3
 11  19  16  16   3   3  10  15  17  17   3   3   6  11  18  18   3   3
  2  10  19  19   3   3   1   9  20  20   3   3   1   5  21  21   3   3
  1   1  22  22   3   3   0
  9
  1   7   1   1   2   2   1   6   2   2   2   2   1   5   3   3   2   2
  1   1   4   4   2   2   0
 10
 14  16   1   1   2   2  13  15   2   2   2   2  12  14   3   3   2   2
 11  13   4   4   2   2   6   8   6   6   2   2   2   7   7   7   2   2
  1   3   8   8   2   2   0
```

(CONT)

11																	
23	28	1	1	2	2	22	27	2	2	2	2	21	26	3	3	2	2
20	25	4	4	2	2	19	24	5	5	2	2	18	23	6	6	2	2
17	19	7	7	2	2	12	14	9	9	2	2	8	13	10	10	2	2
4	12	11	11	2	2	1	11	12	12	2	2	1	7	13	13	2	2
1	3	14	14	2	2	0											
12																	
38	43	1	1	2	2	37	42	2	2	2	2	36	41	3	3	2	2
35	40	4	4	2	2	34	39	5	5	2	2	30	35	6	6	2	2
29	34	7	7	2	2	28	33	8	8	2	2	27	32	9	9	2	2
26	31	10	10	2	2	22	27	11	11	2	2	21	26	12	12	2	2
20	25	13	13	2	2	16	21	14	14	2	2	12	20	15	15	2	2
11	19	16	16	2	2	10	15	17	17	2	2	6	11	18	18	2	2
2	10	19	19	2	2	1	9	20	20	2	2	1	5	21	21	2	2
1	1	22	22	2	2	0											
13																	
8	13	1	1	4	4	7	12	2	2	4	4	6	11	3	3	4	4
2	7	4	4	4	4	1	6	5	5	4	4	1	5	6	6	4	4
1	1	7	7	4	4	0											
14																	
20	22	1	1	4	4	16	21	2	2	4	4	15	20	3	3	4	4
14	19	4	4	4	4	10	18	5	5	4	4	9	17	6	6	4	4
8	13	7	7	4	4	4	12	8	8	4	4	3	11	9	9	4	4
2	7	10	10	4	4	1	3	11	11	4	4	0					
15																	
32	37	1	1	4	4	28	36	2	2	4	4	27	35	3	3	4	4
26	34	4	4	4	4	25	33	5	5	4	4	24	29	6	6	4	4
20	28	7	7	4	4	16	27	8	8	4	4	15	26	9	9	4	4
14	19	10	10	4	4	23	25	10	10	4	4	13	18	11	11	4	4
12	20	12	12	4	4	8	19	13	13	4	4	4	15	14	14	4	4
3	11	15	15	4	4	2	10	16	16	4	4	1	9	17	17	4	4
1	5	18	18	4	4	1	1	19	19	4	4	0					
16																	
8	13	1	1	3	3	7	12	2	2	3	3	6	11	3	3	3	3
2	7	4	4	3	3	1	6	5	5	3	3	1	5	6	6	3	3
1	1	7	7	3	3	0											
17																	
20	22	1	1	3	3	16	21	2	2	3	3	15	20	3	3	3	3
14	19	4	4	3	3	10	18	5	5	3	3	9	17	6	6	3	3
8	13	7	7	3	3	4	12	8	8	3	3	3	11	9	9	3	3
2	7	10	10	3	3	1	3	11	11	3	3	0					
18																	
32	37	1	1	3	3	28	36	2	2	3	3	27	35	3	3	3	3
26	34	4	4	3	3	25	33	5	5	3	3	24	29	6	6	3	3
20	28	7	7	3	3	16	27	8	8	3	3	15	26	9	9	3	3
14	19	10	10	3	3	23	25	10	10	3	3	13	18	11	11	3	3
12	20	12	12	3	3	8	19	13	13	3	3	4	15	14	14	3	3
3	11	15	15	3	3	2	10	16	16	3	3	1	9	17	17	3	3
1	5	18	18	3	3	1	1	19	19	3	3	0					
19																	
8	13	1	1	2	2	7	12	2	2	2	2	6	11	3	3	2	2
2	7	4	4	2	2	1	6	5	5	2	2	1	5	6	6	2	2
1	1	7	7	2	2	0											
20																	

(CONT)

20	22	1	1	2	2	16	21	2	2	2	2	15	20	3	3	2	2
14	19	4	4	2	2	10	18	5	5	2	2	9	17	6	6	2	2
8	13	7	7	2	2	4	12	8	8	2	2	3	11	9	9	2	2
2	7	10	10	2	2	1	3	11	11	2	2	0					
21																	
32	37	1	1	2	2	28	36	2	2	2	2	27	35	3	3	2	2
26	34	4	4	2	2	25	33	5	5	2	2	24	29	6	6	2	2
20	28	7	7	2	2	16	27	8	8	2	2	15	26	9	9	2	2
14	19	10	10	2	2	23	25	10	10	2	2	13	18	11	11	2	2
12	20	12	12	2	2	8	19	13	13	2	2	4	15	14	14	2	2
3	11	15	15	2	2	2	10	16	16	2	2	1	9	17	17	2	2
1	5	18	18	2	2	1	1	19	19	2	2	0					
22																	
44	49	1	1	1	4	43	48	2	2	1	4	42	47	3	3	1	4
41	46	4	4	1	4	40	45	5	5	1	4	36	44	6	6	1	4
35	43	7	7	1	4	34	39	8	8	1	4	33	38	9	9	1	4
32	37	10	10	1	4	28	36	11	11	1	4	27	35	12	12	1	4
26	31	13	13	1	4	22	30	14	14	1	4	21	29	15	15	1	4
20	25	16	16	1	4	16	24	17	17	1	4	12	23	18	18	1	4
11	19	19	19	1	4	10	15	20	20	1	4	6	14	21	21	1	4
2	13	22	22	1	4	1	9	23	23	1	4	1	5	24	24	1	4
1	1	25	25	1	4	0											
23																	
1	16	1	1	1	1	20	28	1	1	1	1	32	43	1	1	1	1
1	42	2	2	1	1	1	41	3	3	1	1	1	7	4	4	1	1
11	40	4	4	1	1	1	6	5	5	1	1	10	39	5	5	1	1
1	35	6	6	1	1	1	13	7	7	1	1	17	34	7	7	1	1
1	12	8	8	1	1	16	33	8	8	1	1	3	32	9	9	1	1
2	19	10	10	1	1	23	31	10	10	1	1	1	18	11	11	1	1
22	27	11	11	1	1	1	26	12	12	1	1	1	25	13	13	1	1
1	21	14	14	1	1	3	20	15	15	1	1	2	19	16	16	1	1
1	15	17	17	1	1	1	11	18	18	1	1	1	10	19	19	1	1
1	9	20	20	1	1	1	5	21	21	1	1	1	1	22	22	1	1
0																	
24																	
1	2	9	9	4	4	1	1	10	10	4	4	0					
25																	
1	2	9	9	3	3	1	1	10	10	3	3	0					
26																	
1	2	9	9	2	2	1	1	10	12	2	2	0					
27																	
1	2	9	9	1	1	1	1	10	10	1	1	0					
28																	
8	10	4	4	4	4	7	9	5	5	4	4	0					
29																	
8	10	4	4	3	3	7	9	5	5	3	3	0					
30																	
8	10	4	4	2	2	7	9	5	5	2	2	0					
31																	
8	10	4	4	1	1	7	9	5	5	1	1	0					
32																	
17	19	1	1	4	4	0											
33																	
17	19	1	1	3	3	0											

(CONT)

```
 34
 17  19   1   1   2   2   0
 35
 17  19   1   1   1   1   0
 36
 14  16   7   7   4   4  13  15   8   8   4   4   0
 37
 14  16   7   7   3   3  13  15   8   8   3   3   0
 38
 14  16   7   7   2   2  13  15   8   8   2   2   0
 39
 14  16   7   7   1   1  13  15   8   8   1   1   0
 40
  1   2  15  15   4   4   1   1  16  16   4   4   0
 41
  1   2  15  15   3   3   1   1  16  16   3   3   0
 42
  1   2  15  15   2   2   1   1  16  16   2   2   0
 43
  1   2  15  15   1   1   1   1  16  16   1   1   0
 44
 29  31   1   1   4   4   0
 45
 29  31   1   1   3   3   0
 46
 29  31   1   1   2   2   0
 47
 29  31   1   1   1   1   0
 48
 20  22  10  10   4   4  19  21  11  11   4   4   0
 49
 20  22  10  10   3   3  19  21  11  11   3   3   0
 50
 20  22  10  10   2   2  19  21  11  11   2   2   0
 51
 20  22  10  10   1   1  19  21  11  11   1   1   0
  0
012
  0
  1 12  1  1 1.0
 19 21  1  1 1.0
 13 18  2  2 1.0
 22 23  3  3 1.0
 24 51  4  4 1.0
  0
013
 19
 19
A0816 A1123 A2400 A2555 A2600 A2800 A4200 A9235 A9236 A9238 A9439 A9440
A9441 A9442 A9999 U23X  PU24X AM24X CUFISS
 19
B0816 B1123 B2400 B2555 B2600 B2800 B4200 B9235 B9236 B9238 B9439 B9440
B9441 B9442 B9999 U23X  PU24X AM24X CUFISS
  6
```

(CONT)

```
Q1123 Q2400 Q2555 Q2600 Q2800 Q4200
  9
I0510II0511II0600II11230I24000I2555OI26000I28000I42000
020
  1 12
A0816  2.7176   -2A1123  6.2401   -3A2400  2.3756   -3A2555  2.2528   -4
A2600  8.1994   -3A2800  1.6266   -3A4200  1.8431   -4A9235  2.9907   -5
A9236  0.0        A9238  1.3558   -2A9439  0.0        A9440  0.0
A9441  0.0        A9442  0.0        A9999  0.0        U23X   0.0
PU24X  0.0        AM24X  0.0       CUFISS  0.0
 13 18
B0816  2.1460   -2B1123  8.2217   -3B2400  2.8111   -3B2555  2.6609   -4
B2600  9.6814   -3B2800  1.9207   -3B4200  2.1764   -4B9235  1.9168   -5
B9236  0.0        B9238  8.6912   -3B9439  1.3591   -3B9440  4.0789   -4
B9441  2.0392   -4B9442  4.8481   -5B9999  0.0        U23X   0.0
PU24X  0.0        AM24X  0.0       CUFISS  0.0
 19 21
A0816  2.1460   -2A1123  8.2217   -3A2400  2.8111   -3A2555  2.6609   -4
A2600  9.6814   -3A2800  1.9207   -3A4200  2.1764   -4A9235  2.7953   -5
A9236  0.0        A9238  1.2673   -2A9439  0.0        A9440  0.0
A9441  0.0        A9442  0.0        A9999  0.0        U23X   0.0
PU24X  0.0        AM24X  0.0       CUFISS  0.0
 22 22
Q1123  2.2370   -3Q2400  1.3180   -2Q2555  1.2480   -3Q2600  4.5410   -2
Q2800  9.0060   -3Q4200  1.0210   -3
 23 23
Q1123  5.9220   -3Q2400  7.4068   -3Q2555  7.0100   -4Q2600  2.5512   -2
Q2800  5.0613   -3Q4200  5.7352   -4
 24 39
I0510I 2.9110   -2I0511I 2.5310   -3I0600I 8.2700   -3
 40 51
I11230 1.8420   -2I24000 1.3980   -3I2555O 1.3240   -4I26000 4.8170   -3
I28000 9.5520   -4I42000 1.0820   -4
  0
END
DUTLIN
RODINS        0  6  0 24
 0.0
  0  0  1  0  0  0  0  1  0  0  0  0  0  0
EXPINS        0 06  0 30
 255.5
  0  0  0  0  3  3  0  1  0  0  0  0  0  1
  0  0  0  0  0  0
REFINS        0  6  0 24
 0.0         0.08333333  8.52067E+08 0.333333    1.3     E-09
 -1     1

END
DUTLIN
RODINS        0  6  0 24
 0.0
  0  0  1  0  0  0  0  2  0  0  0  0  0  0

END
```

(CONT)

```
DUTLIN
RODINS        0  6  0 24
 0.0
  0  0  1  0  0  0  0  3  0  0  0  0  0  0
DTNINS        0  6  0 72
                                          2.55620+9   1.0        0.08333333
           1     1        2
                       1  1                  1
        1                     1                  1
PERINS        0  0  0 24
  0  0  0  0  0  0  0  4

END
DUTLIN
DTNINS        0  6  0 48
                                          2.55620+9   1.0        0.08333333
          -2  3  2       -1                                  75
                       1  1     0

END
DUTLIN
RODINS        0  6  0 24
 0.0
  0  0  1  0  0  0  0  4  0  1  1  0  0  0
DTNINS        0  6  0 48
                                          2.55620+9   1.0        0.08333333
           1              2
                       1  1

END
DUTLIN
RODINS        0  6  0 24
 0.0
  0  0  1  0  0  0  0  0  0 -4  0  0  0  0
REFINS        0 24  0 24
 0.0         0.08333333  8.52067E+08 0.333333    1.3    E-09
 0.0
 0.0
 0.0         100.0
  0  0  1  0  0  0  0  0  0  0  0  0  0  0  0  1

END
/*
//
```

Figure 13. Selected Output From Super Sample Problem.

```
BOLD VENTURE VERS-4 RUN ON THE IBM-360/***. CONTROL MOD=CONTROL1, DATE=04-01-81, TIME=18.10.57, JOBNAME=TBFA

INITILIZATION, REFERENCE - REMAINING I/O=  14.99, CPU MIN=  19.06

RUN TITLE AND CONTROL MODULE DATA
 SUPER SAMPLE PROBLEM.
220000     0     0     0     0     0     0     0     0  0  0  1  0  0  0
  1  2  2 12  7 19 13  2 12  7 13  2 12  7  9 15  2  7  2 12  7  2 12 19
  7


                        INITIAL I/O FILE MANAGEMENT TABLES
                     FILE NAME SUPPLIED BY
                  ------------------------------                                  USER
FILE NUMBER        SEEK   USER-EXIST   USER-STACK      VERSION      WRITTEN   IDENTIFICATION
    10            CONTRL                                  1            1     TBFA      04-01-81


MODULES TO BE ACCESSED IN ORDER
     1     2     2    12     7    19    13     2    12     7    13     2    12     7     9    15     2     7     2    12
     7     2    12    19     7

READ DATA AND ACCESS MODULE  1    - REMAINING I/O=  14.97, CPU MIN=  19.06

READ DATA FOR A SPECIAL PROCESSOR - REMAINING I/O=  14.83, CPU MIN=  19.01

ACCESS PROCESSOR 'DVENTR'         - REMAINING I/O=  14.81, CPU MIN=  19.01

READ DATA FOR A SPECIAL PROCESSOR - REMAINING I/O=  14.77, CPU MIN=  18.99

ACCESS PROCESSOR 'DUTLIN'         - REMAINING I/O=  14.76, CPU MIN=  18.99

READ INPUT DATA ONLY (LOOK-AHEAD) - REMAINING I/O=  14.74, CPU MIN=  18.99

ACCESS MODULES 12  7 19 13  0     - REMAINING I/O=  14.72, CPU MIN=  18.99
     CYCLE, OPT, PT.IN HIST, CYCLE TIME, TIME IN CYCLE, FRAC.IN CYCLE-  1  0  1  0.0          0.0          0.0
     ITERATIONS, CONVERGENCE, SEARCH, PEAK POWER DENSITY, K -    32  -3.22990D-05   0.0          6.40995E 02    0.9935811
     PRIMITIVE CONVERSION RATIO, ALSO FOR CRITICAL SYSTEM, FUEL CONSUMPTION(ATOMS/WATT-SEC) -   1.47192   1.45235   2.83732E 10
    FUEL MANAGEMENT,TIME= 0.0          DAYS,CYCLE=    0,INITIAL CORE FISSILE INVENTORY(KGM)  4.961172 03
     TIME AFTER EXPOSURE  255.500 DAYS, ESTIMATED K  0.985126, FISSILE INVENTORY 5.233141E 03 KG, CONVERSION RATIO(MB)    1.42573

ACCESS PROCESSOR 'DUTLIN'         - REMAINING I/O=  13.56, CPU MIN=  17.25

READ INPUT DATA ONLY (LOOK-AHEAD) - REMAINING I/O=  13.54, CPU MIN=  17.24

ACCESS MODULES 12  7 13  0  0     - REMAINING I/O=  13.50, CPU MIN=  17.24
     CYCLE, OPT, PT.IN HIST, CYCLE TIME, TIME IN CYCLE, FRAC.IN CYCLE-  1  0  1  0.0          2.55500E 02  0.0
     ITERATIONS, CONVERGENCE, SEARCH, PEAK POWER DENSITY, K -    34  -1.86953D-05   0.0          5.00619E 02    0.9898390
     PRIMITIVE CONVERSION RATIO, ALSO FOR CRITICAL SYSTEM, FUEL CONSUMPTION(ATOMS/WATT-SEC) -   1.46997   1.43931   2.87541E 10
     TIME AFTER EXPOSURE  511.000 DAYS, ESTIMATED K  0.989895, FISSILE INVENTORY 5.502852E 03 KG, CONVERSION RATIO(MB)    1.41552

ACCESS PROCESSOR 'DUTLIN'         - REMAINING I/O=  12.43, CPU MIN=  15.47

READ INPUT DATA ONLY (LOOK-AHEAD) - REMAINING I/O=  12.40, CPU MIN=  15.46

ACCESS MODULES 12  7  9 15  0     - REMAINING I/O=  12.39, CPU MIN=  15.46
     CYCLE, OPT, PT.IN HIST, CYCLE TIME, TIME IN CYCLE, FRAC.IN CYCLE-  1  0  1  0.0          5.11000E 02  0.0
     ITERATIONS, CONVERGENCE, SEARCH, PEAK POWER DENSITY, K -    34   4.00271D-05   0.0          5.07288E 02    1.0148367
     PRIMITIVE CONVERSION RATIO, ALSO FOR CRITICAL SYSTEM, FUEL CONSUMPTION(ATOMS/WATT-SEC) -   1.42956   1.47240   2.94213E 10
     ADJOINT - ITERATIONS, CONVERGENCE, K -    24  -1.12540D-05    1.0148384
     FISSILE INVENTORY 5.502959E 03 KG, CONVERSION RATIO(PR)    1.41662, FISSILE CONSUMPTION RATE 1.162241E-14 KG/W-SEC
     FWD ADJ K 1.014835 1.014836, LIFETIME  3.41004E-07, B.D. NCFF.  1.83762E-13, SUM (N DELTA K)/(K DELTA N)  2.25394D-01
```

```
ACCESS PROCESSOR 'DUTLIN'          - REMAINING I/O=   9.71, CPU MIN=  12.23

READ INPUT DATA ONLY (LOOK-AHEAD) - REMAINING I/O=   9.68, CPU MIN=  12.22

ACCESS MODULES  7  0  0  0  0      - REMAINING I/O=   9.68, CPU MIN=  12.22
     ADJOINT - ITERATIONS, CONVERGENCE, K -    49   5.91715D-06    1.0148364

ACCESS PROCESSOR 'DUTLIN'          - REMAINING I/O=   5.69, CPU MIN=   8.63

READ INPUT DATA ONLY (LOOK-AHEAD) - REMAINING I/O=   5.66, CPU MIN=   8.63

ACCESS MODULES 12  7  0  0  0      - REMAINING I/O=   5.65, CPU MIN=   8.62
     CYCLE, OPT, PT.IN HIST, CYCLE TIME, TIME IN CYCLE, FRAC.IN CYCLE-  1  1  1  0.0          5.11000E 02  0.0
     ITERATIONS, CONVERGENCE, SEARCH, PEAK POWER DENSITY, K -    30   4.72069D-06   0.0          5.09122E 02    0.9088856
     PRIMITIVE CONVERSION RATIO, ALSO FOR CRITICAL SYSTEM, FUEL CONSUMPTION(ATOMS/WATT-SEC) -   1.39758   1.09073   2.76279E 10

ACCESS PROCESSOR 'DUTLIN'          - REMAINING I/O=   4.54, CPU MIN=   7.04

ACCESS MODULES 12 19  7  0  0      - REMAINING I/O=   4.51, CPU MIN=   7.04
     CYCLE, OPT, PT.IN HIST, CYCLE TIME, TIME IN CYCLE, FRAC.IN CYCLE-  1 -4  0  0.0          5.11000E 02  0.0
    FUEL MANAGEMENT,TIME= 5.11000E 02 DAYS,CYCLE=    0,FISSILE INVENTORY,REMOVED,ADDED(KGM)  5.65014E 03  6.18409E 02  2.89604E 03
     ITERATIONS, CONVERGENCE, SEARCH, PEAK POWER DENSITY, K -    25   4.28596D-05   0.0          5.97834E 02    1.0201484
     PRIMITIVE CONVERSION RATIO, ALSO FOR CRITICAL SYSTEM, FUEL CONSUMPTION(ATOMS/WATT-SEC) -   1.34755   1.40605   2.90743E 10
```

FINAL I/O FILE MANAGEMENT TABLES

FILE NUMBER	FILE NAME SUPPLIED BY SEEK	USER-EXIST	USER-STACK	VERSION	WRITTEN	USER IDENTIFICATION	
10	CONTRL			1	1	TBFA	04-01-81
11	GRUPXS			1	1	TBFA	04-01-81
12	RODSET			1	1	TBFA	04-01-81
13	EXPOSE			1	1	TBFA	04-01-81
14	REFUEL			1	1	TBFA	04-01-81
15	GEODST			1	1	TBFA	04-01-81
16	NDXSRF			1	1	TBFA	04-01-81
17	ZNATDN			1	1	TBFA	04-01-81
18	YNATDN			1	1	TBFA	04-01-81
19	RZFLUX			1	1	TBFA	04-01-81
20	RTFLUX			1	1	TBFA	04-01-81
30	FNATDN			1	1	TBFA	04-01-81
32	FIXSRC			1	1	TBFA	04-01-81
33	ATFLUX			1	1	TBFA	04-01-81
34	PEPTUB			2	1	TBFA	04-01-81
35	ATFLUX			2	1	TBFA	04-01-81
36	YNATDN			2	1	TBFA	04-01-81
37	MASBAL						

```
WRAP-UP NOW COMPLETE. -- DRIVER TO SEEK NEW CASE - REMAINING I/O=   3.45, CPU MIN=   5.61 - TIME=19.24.54
```

VENTURE - NEUTRONICS MODULE -VERS 3- JANUARY 1,1981 --- QUALITY ASSURANCE LEVEL 1

RUN TITLE - SUPER SAMPLE PROBLEM.

STORAGE REQUIRED FOR CROSS SECTION CHECK 894 WORDS

TITLE OF THE LATEST VERSION CROSS SECTION FILE
LCCEWG METHODS BENCHMARK PROBLEM 3 LIBRARY - R PROTSIK (GE-ARSD)

CROSS SECTION CHECK COMPLETED NORMALLY

REFERENCE REAL TIME FROM ZNATDN INTERFACE FILE = 0.0 DAYS

SOLUTION BY FINITE-DIFFERENCE DIFFUSION THEORY
EIGENVALUE PROBLEM
GEOMETRY NO. 17 3-D TRIAGONAL-Z
TRIAGONAL OPTION 1 PARALLELOGRAM - 60 DEGREE

NUMBER OF ENERGY GROUPS	4
NUMBER OF UPSCATTER GROUPS (MAX)	0
NUMBER OF DOWNSCATTER GROUPS (MAX)	3
NUMBER OF INTERVALS IN DIMENSION 1 (COLUMNS)	50
NUMBER OF INTERVALS IN DIMENSION 2 (ROWS)	25
NUMBER OF INTERVALS IN DIMENSION 3 (PLANES)	4
NUMBER OF ZONES	52
NUMBER OF REGIONS	123
NUMBER OF BLACK ABSORBER ZONES	1

BOUNDARY INDICATORS- LEFT 1 RIGHT 2
TOP 1 BOTTOM 2
FRONT 2 REAR 1

MEMORY REQUIREMENTS FOR DATA STORAGE

	TOTAL MINIMUM	TOTAL MAXIMUM	A	B	C	D
STORAGE AVAILABLE	220000					
MACRO CALCULATION	3050					
EQUATION CONSTANTS CALCULATION						
CORE CONTAINED OR SPACE STORED	32304	33554				
PLANE STORED	15829	17079				
ROW STORED	6019	7269				
MULTI-LEVEL PLANE STORED	17053	18303				
INITIAL FLUX						
CORE CONTAINED OR SPACE STORED	14531	18281				
OTHER MODES	4531	8281				
ITERATIVE PROCESS						
CORE CONTAINED	207238		176202	2195	2290	26551
SPACE STORED	69580		66551	2195	834	0
4 PLANES STORED	70833		67804	2195	834	0
1 PLANE STORED	25605		22576	2195	834	0
25 ROWS STORED	19629		16600	2195	834	0
1 ROW STORED	3029		0	2195	834	0
4 MULTI-LEVEL PLANES STORED	80729		7500	2195	834	70200
PERTURBATION CALCULATION	8540					

DATA WILL BE STORED FOR ALL GROUPS, ALL SPACE

MEMORY LOCATIONS RESERVED FOR DATA STORAGE--- 220000
MAX MEMORY LOCATIONS REQUIRED FOR THIS PROB-- 207238

```
MEMORY LOCATIONS NOT USED--------------------   12762

     SPECIAL SCRATCH DATASET REQUIREMENTS
     MAXIMUM PHYSICAL RECORD IS      7200 WORDS

WITE CONTAINER ARRAYS, CONTROL      36 DATA   12716
DIRECT ACCESS FILE 24  REQUIRES     4 RECORDS    10000 WORDS IN LENGTH
DIRECT ACCESS FILE 27  REQUIRES     4 RECORDS    10000 WORDS IN LENGTH
DIRECT ACCESS FILE 28  REQUIRES     4 RECORDS    10000 WORDS IN LENGTH
DIRECT ACCESS FILE 40  REQUIRES     4 RECORDS    26550 WORDS IN LENGTH

DD PARAMETERS FOLLOW FOR  B1 = 3520  AND  B2 =  32000
N2=  51  N3=  10  N4=   1  N5=  23  N6=  10  N7=   2  N8=   2  N9=  13  N10=  13  N11=  16  N12=   1  N13=   1  N14=   1  N15=  10
N16=  51   (NOTE THAT IF THE FLUXES ARE TO BE EXPANDED FROM EXISTING RTFLUX, N10=  51)

REQUIRED DISK STORAGE SPACE FOR FLUX(UNITS 24,27,28) IS     179520 BYTES.
                            FOR CONSTANTS(UNIT 40) IS--     736000 BYTES.
                            FOR CONSTANTS(UNIT 23) IS--      35200 BYTES.
REQUIRED TOTAL DISK STORAGE SPACE IS-------------------    7417920 BYTES.

FOR THE ASSIGNED DATA STORAGE, THE REQUIRED REGION SIZE IS APPROXIMATELY 1210K BYTES

MAXIMUM STORAGE USED FOR MACROSCOPIC CROSS SECTION CALCULATION    3050 WORDS

THE MAXIMUM AND MINIMUM DIFFUSION COEFFICIENTS ARE  6.44536E 00  4.46438E-01

FINE MESH DESCRIPTION - POINT IS LOCATED AT THE CENTROID OF THE VOLUME ELEMENT
EQUILATERAL TRIANGLES - SIDE =   9.4281
DISTANCE TO POINT - DIMENSION 3 (FRONT TO REAR)
    1  67.3100    2 152.4000    3 185.4200    4 215.9000

DETERMINE INITIAL PARAMETERS FOR ITERATIVE PROCEDURE

REFERENCE POINT FOR INITIALIZATION WILL BE AT COLUMN =    36 ROW =     2 PLANE =     3 ZONE =    18
INITIAL OUTER ITERATION EIGENVALUE        0.948511  OPTION  -99
INITIAL OVERRELAXATION COEFFICIENTS MAX.  1.410419  MIN.  1.250364  INNER ITERATIONS MAX.    4  MIN.    4  OPTION    0
MESH POINT SWEEP OPTION    1
OUTER ITERATION LIMIT TO BE USED    50  ESTIMATED    53

MAXIMUM STORAGE USED FOR CALCULATING INITIAL PARAMETERS WAS   27974

INITIAL FLUX IS FXX(J,K)*FY(I)*FZ(KB)

TOTAL CORE REQUIRED FOR DATA STORAGE IS 207232 WORDS
ELAPSED CPU AND CLOCK MINUTES ARE  0.069   0.776
```

```
A FLUX - EIGENVALUE PROBLEM FOLLOWS
      4 INNERS MIN,  4 INNERS MAX - CHEBYCHEV  BETA ON INNERS
    SIGMA-1 ORDERING
PROCEDURE=0,1,2,3,4-NORMAL,CHEBYSHEV,SEMEX,DEMEX,SEMEXF.   ICVR=0,1-YES,NO INNERS CONVR.   OCVR=0,1-YES,NO OUTERS CONVR.
ITER  PROC  ICVR  OCVR   FLUX CHANGE    MU-BAR  OTHER-MU  SEM-IND   ACCELERATION PARAMETERS   SOURCE       K-USED     K-CALC
   1    0     0     0   6.15877D 01    0.0      0.0      1.00000      0.0        0.0       1.50968E 17  1.0000000  0.6375222
   2    0     0     0   1.53926D 01    0.07774  0.0      1.00000      1.00000    0.0       1.19338E 17  1.0000000  0.8197107
   3    0     0     0   3.84970D 00    0.09437  0.0      1.00000      0.10420    0.0       1.09752E 17  1.0000000  0.9186119
   4    0     0     0  -8.61652D-01    0.12431  0.0      1.00000      0.33519   -0.01763   1.05192E 17  1.0000000  0.9587523
NEW OVERRELAXATION COEFFICIENTS CALCULATED  1.30697  1.48968  1.34370  1.40360
NEW INNERS CALCULATED   4   4   4   4
   5    0     0     0  -8.53005D-01    0.29445  0.0      1.00000      3.23770   -0.28248   1.02079E 17  1.0000000  0.9745044
   6    0     0     0  -6.19274D-01    0.37065  0.0      1.00000      0.69471   -0.02778   9.95745E 16  0.9745044  0.9791253
   7    0     0     0  -2.45523D-01    0.37821  0.0      1.00000      0.65728   -0.01795   1.00094E 17  0.9791253  0.9817027
   8    0     0     0  -2.27157D-01    0.85353  0.0      1.00000     -1.06974    0.61447   1.00367E 17  0.9817027  0.9835586
     FORCED EXTRAPOLATION LAMDA         0.86486

  2.18873D 14  2.53074D 14  4.71793D 14  0.0          8.64857D-01  4.63917D-01  8.65385D-01  9.95489D-01  4.51141D-03
   9    4     0     0  -2.87038D-01    0.86486  0.0      1.00000      2.96790    0.0       1.00561E 17  0.9835586  0.9850773
  10    1     1     0  -1.53485D-01    0.0      0.0      1.00000      0.61925    0.0       1.01767E 17  0.9900840
  11    1     0     0  -2.53162D-01    0.0      0.0      1.00000      1.33023    0.43908   1.02555E 17  0.9977476
  12    1     0     0  -1.20068D-01    0.30190  0.30190  1.00000      1.07474    0.28130   1.01968E 17  0.9920406
  13    1     0     0   4.12672D-02    0.68701  0.32306  1.00000      1.01266    0.24296   1.02115E 17  0.9931842
  14    1     0     0   2.90752D-02    0.64518  0.66514  1.00000      0.99814    0.23399   1.02191E 17  0.9939207
  15    1     0     0  -2.05296D-02    0.77756  0.77999  1.00000      0.99477    0.23191   1.02102E 17  0.9934901
  16    1     0     0   1.77180D-02    0.82033  0.50119  1.00000      0.99399    0.23143   1.02087E 17  0.9933412
  17    1     0     0  -1.08952D-02    0.82140  0.62037  0.0          0.99381    0.23132   1.02132E 17  0.9935602
  18    2     0     0  -2.68011D-02    1.47182  2.44649  0.0          5.12902    2.78511   1.02147E 17  0.9937078
  19    0     0     1   1.70660D-02    0.0      0.0      1.00000     -9.00746  -12.77642   1.02109E 17  0.9935214  0.9935815
  20    1     0     0  -3.98337D-03    0.0      0.0      1.00000      0.67150    0.0       1.02116E 17  0.9935815
  21    1     0     0  -2.53924D-03    0.0      0.0      1.00000      1.16421    0.29477   1.02116E 17  0.9935858
  22    1     0     0  -1.03149D-03    0.61281  0.61281  1.00000      1.16421    0.29477   1.02116E 17  0.9935808
  23    1     0     0  -6.87745D-04    1.02543  0.68769  1.00000      1.16421    0.29477   1.02116E 17  0.9935824
  24    1     0     0   5.70455D-04    0.80070  0.84837  1.00000      1.16421    0.29477   1.02116E 17  0.9935824
  25    1     0     0   5.05656D-04    0.85727  0.89341  1.00000      1.16421    0.29477   1.02116E 17  0.9935812
  26    1     0     0   3.77125D-04    0.84332  0.75558  1.00000      1.16421    0.29477   1.02116E 17  0.9935801
  27    3     0     0   3.01790D-03    1.55185  8.00389  0.0         20.74536   -0.11077   1.02116E 17  0.9935810
  28    0     0     1  -1.65413D-03    0.0      0.0      1.00000     -5.47032   -7.89580   1.02116E 17  0.9935824  0.9935811
  29    1     0     0   2.13901D-04    0.0      0.0      1.00000      0.67150    0.0       1.02116E 17  0.9935811
  30    1     0     0   1.08104D-04    0.0      0.0      1.00000      1.16421    0.29477   1.02116E 17  0.9935815
  31    1     0     0   8.12885D-05    0.57962  0.57962  1.00000      1.16421    0.29477   1.02116E 17  0.9935811
  32    1     0     0  -3.22990D-05    0.97844  0.53522  1.00000      1.16421    0.29477   1.02116E 17  0.9935812
                                                                                                           0.9935811

ESTIMATED ABSOLUTE POINT FLUX RELATIVE ERROR  3.02298D-04

MULTIPLICATION RELIABILITY ESTIMATORS
NEUTRON BALANCE KEFFECTIVE----------------------------------------  0.9935812
BY THE SUM OF THE SQUARES OF THE RESIDUES-------------------------  0.9935812
UPPER AND LOWER BOUNDS ESTIMATES BY MAX REL FLUX CHANGE-----------  0.9936132   0.9935490
UPPER AND LOWER BOUNDS ESTIMATES OVER ALL SIGNIFICANT POINTS-------  0.9943927   0.9925810

NUMBER OF INNER ITERATIONS, OUTER ITERATION ERROR EIGENVALUE, AND OVERRELAXATION COEFFICIENTS     4  9.03469D-01
  1.30697  1.48968  1.34370  1.40361

CPU AND CLOCK MINUTES REQUIRED FOR THIS EIGENVALUE PROBLEM ARE  1.617   8.685
DOPC FILE CLOSING DATA - UNIT, ARRAYS      27       6       1
DOPC FILE CLOSING DATA - UNIT, ARRAYS      28       6       1

    LEAKAGE  5.93710E 15  TOTAL LOSSES  1.84288E 19  TOTAL PRODUCTIONS  1.83105E 19  REACTOR POWER(WATTS)  2.55620D 09
```

PRIMITIVE FISSILE CONVERSION RATIO IS 1.47192D 00, ESTIMATE FOR CRITICAL SYSTEM IS 1.45235D 00
FISSILE DESTRUCTION PER UNIT ENERGY (ATOMS/WATT-SEC) IS 2.83732D 10

BOUNDARY NEUTRON LEAKAGE

GROUP	LEFT	RIGHT	TOP	BOTTOM	FRONT	BACK
1	0.0	0.0	0.0	0.0	2.28853D 14	0.0
2	0.0	0.0	0.0	0.0	2.80419D 15	0.0
3	0.0	0.0	0.0	0.0	1.75369D 15	0.0
4	0.0	0.0	0.0	0.0	1.15037D 15	0.0
SUM	0.0	0.0	0.0	0.0	5.93710E 15	0.0

OVERALL NEUTRON BALANCE

GROUP	ABSORPTIONS	B**2 LOSSES	1/V LOSS	OUT-SCATTER	IN-SCATTER	P1 IN-SCATTER	SOURCE	POWER(WATTS)
1	2.48220E 18	0.0	0.0	1.16809E 19	0.0	0.0	1.41634E 19	6.75154E 07
2	5.06491E 18	0.0	0.0	1.05975E 19	1.15282E 19	0.0	4.13696E 18	7.34614E 07
3	7.96062E 18	0.0	0.0	2.91499E 18	1.07496E 19	0.0	1.27780E 17	5.44658E 07
4	2.91503E 18	0.0	0.0	0.0	2.91553E 18	0.0	6.52498E 14	1.75728E 07
SUM	1.84228E 19	0.0	0.0	2.51933E 19	2.51933E 19	0.0	1.84288E 19	2.13015E 08

ZONE VOLUMES FOLLOW. TOTAL VOLUME 1.11203E 07

2.22905E 04	2.81564E 04	9.15070E 04	1.61895E 05	2.22905E 04	2.81564E 04	9.15070E 04	1.61895E 05	2.60056E 04
3.28492E 04	1.05390E 05	1.88880E 05	4.22346E 04	8.44683E 04	1.90050E 05	4.22346E 04	8.44683E 04	1.90050E 05
4.92737E 04	9.71781E 04	2.21729E 05	1.65477E 06	2.74086E 06	3.51956E 03	3.51956E 03	6.84357E 03	1.55447E 04
7.03911E 03	7.03911E 03	8.21229E 03	3.10894E 04	3.51956E 03	3.51956E 03	4.10614E 03	1.55447E 04	7.03911E 03
7.03911E 03	8.21229E 03	3.10894E 04	3.51956E 03	3.51956E 03	4.10614E 03	1.55447E 04	3.51956E 03	3.51956E 03
4.10614E 03	1.55447E 04	7.03911E 03	7.03911E 03	8.21229E 03	3.10894E 04	4.49257E 06		

ZONE AVERAGE FLUX INTERFACE FILE RZFLUX (VERSION 1) HAS BEEN WRITTEN ON UNIT NUMBER 19

POINT REGULAR FLUX INTERFACE FILE RTFLUX (VERSION 1) HAS BEEN WRITTEN ON UNIT NUMBER 20

GROUP FLUX VALUES AT PLANE 4 ROW 3 COLUMN 31 = POINT AT FIRST GROUP MAXIMUM

9.77670E 14	2.78075E 15	1.45424E 15	1.15998E 14

MAXIMUM FIRST GROUP FLUXES BY ZONE

3.57665E 13	9.64606E 13	4.80255E 14	4.46336E 14	2.43218E 13	6.56772E 13	3.27473E 14	3.04215E 14	1.69873E 12
4.60296E 12	2.67199E 13	2.87317E 13	7.39038E 13	2.20300E 14	9.77670E 14	5.03408E 13	1.50273E 14	6.67900E 14
3.07002E 12	1.02150E 13	4.07637E 13	2.72909E 13	5.39615E 11	9.46341E 13	6.40351E 13	6.36058E 12	9.68859E 10
6.33474E 13	4.30459E 13	4.11344E 12	6.75561E 10	9.47998E 13	6.46124E 13	5.80096E 12	9.48457E 10	2.28193E 14
1.55402E 14	1.45814E 13	2.28545E 11	6.35582E 14	4.33930E 14	4.56770E 13	5.95067E 11	6.35805E 14	4.34157E 14
4.57090E 13	5.95319E 11	6.71661E 14	4.58885E 14	4.83930E 13	6.13950E 11	0.0		

THE MAXIMUM POWER DENSITY IS AT PLANE 4, ROW 3, AND COLUMN 31 AND IS 6.40995045D 02 WATTS/CC.

THE MAXIMUM NEUTRON DENSITY IS AT PLANE 4, ROW 1, AND COLUMN 31 AND IS 1.70286287D 07 NEUTRONS/CC.

THE MAXIMUM POWER DENSITY (WATTS/CC) IN EACH ZONE IS

6.75519E 00	1.75745E 01	9.00907E 01	8.33095E 01	4.60191E 00	1.19843E 01	6.15360E 01	5.68790E 01	4.92614E-01
1.22607E 00	7.82705E 00	7.92750E 00	5.07107E 01	1.65925E 02	6.40995E 02	3.46624E 01	1.13662E 02	4.39516E 02
6.73603E-01	2.31180E 00	9.82900E 00	2.32651E 00	6.42313E-02	2.90008E 01	1.97055E 01	8.07905E 00	2.60888E-01
2.18360E 01	1.49184E 01	2.57447E 00	1.43247E-01	2.90491E 01	1.99245E 01	3.68539E 00	2.74499E-01	8.18851E 01
5.60862E 01	9.95008E 00	5.31414E-01	1.15438E 00	8.00806E-01	2.27274E-01	1.56347E-02	1.15484E 00	8.01442E-01
2.28385E-01	1.57521E-02	1.11919E 00	7.77126E-01	2.22527E-01	1.47694E-02	0.0		

TOTAL CPU MINUTES USED 1.697 TOTAL CLOCK MINUTES USED 9.990 TOTAL I/O USED 1037

```
FORTRAN DIRECT ACCESS UNITS USED (LIMIT 10)      4

     TOTAL CPU TIME USED     0.004 MINUTES     TOTAL CLOCK TIME USED     0.093 MINUTES     TOTAL I/O USED      34

                BURNER - EXPOSURE MODULE - PRE-RELEASE VERSION 1G - AUGUST 20, 1979   - QUALITY ASSURANCE LEVEL 0
                ---------------------------------------------------------------------------------------------------


CASE TITLE -  SUPER SAMPLE PROBLEM.

RITE CONTAINER ARRAYS, CONTROL       6 DATA       1

TITLE OF THE LATEST VERSION CROSS SECTION FILE
         LCCEWG METHODS BENCHMARK PROBLEM 3 LIBRARY - R PROTSIK (GE-ARSD)

METHOD OF SOLUTION - MATRIX EXPONENTIAL


MAXIMUM ARRAY SIZE USED FOR INITIAL PROCESSING IS    2034

STORAGE REQUIRED FOR BASIC DATA IS    1823

        STORAGE SUPPLIED IS   220000
MAXIMUM STORAGE REQUIRED IS     8574
MINIMUM STORAGE REQUIRED IS     3729

 MODPR  =  0 MODREF = -1

MEMORY ACTUALLY USED WILL BE    8574

NEXT-TO-LATEST VERSION ZNATDN NOT AVAILABLE

EXPOSURE TIME STEP STARTS AT   0.0            DAYS

EXPOSURE TIME STEP IS   2.555000E 02 DAYS (   2.207520E 07 SECONDS ) THE NUMBER OF SUBSTEPS IS   3

POWER   2.556194E 09 WATTS, MAXIMUM POWER DENSITY   5.399556E 02 WATTS/CC IN ZONE          15   AT START OF SUBSTEP     1
POWER   2.553057E 09 WATTS, MAXIMUM POWER DENSITY   5.286716E 02 WATTS/CC IN ZONE          15     AT END OF SUBSTEP     1

          AVERAGE POWER AT END OF SUBSTEP   2.554625E 09 WATTS

          INITIAL REACTION RATES WILL BE MULTIPLIED BY   1.002457E 00 FOR NEXT SUBSTEP            1.002458E 00   1.001228E 00

POWER   2.559329E 09 WATTS, MAXIMUM POWER DENSITY   5.299705E 02 WATTS/CC IN ZONE          15   AT START OF SUBSTEP     2
POWER   2.557091E 09 WATTS, MAXIMUM POWER DENSITY   5.193735E 02 WATTS/CC IN ZONE          15     AT END OF SUBSTEP     2

          AVERAGE POWER AT END OF SUBSTEP   2.556418E 09 WATTS

          INITIAL REACTION RATES WILL BE MULTIPLIED BY   1.002370E 00 FOR NEXT SUBSTEP            9.999135E-01   1.000264E 00

POWER   2.556868E 09 WATTS, MAXIMUM POWER DENSITY   5.193284E 02 WATTS/CC IN ZONE          15   AT START OF SUBSTEP     3
POWER   2.555398E 09 WATTS, MAXIMUM POWER DENSITY   5.094063E 02 WATTS/CC IN ZONE          15     AT END OF SUBSTEP     3

          AVERAGE POWER AT END OF SUBSTEP   2.556323E 09 WATTS


END OF EXPOSURE STEP ATOM DENSITIES AT TIME   2.555000E 02  DAYS


ZONE NUMBER    1
```

INVENTORY AND REACTION RATES BY ABSOLUTE NUCLIDE

********** START OF STEP TIME 0.0 DAYS ********** ********** END OF STEP TIME 255.500 DAYS **********

NO.	NAME	INVENTORY (KG)	ABSORPTION	FISSION	PRODUCTION	CAPTURE (N,G)	INVENTORY (KG)	ABSORPTION	FISSION	PRODUCTION	CAPTURE (N,G)
1	O16	1.51727E 04	3.24743E-03	0.0	0.0	3.24743E-03	1.51727E 04	3.22937E-03	0.0	0.0	3.22937E-03
2	NA23	1.65508E 04	2.43080E-03	0.0	0.0	2.42991E-03	1.65508E 04	2.41728E-03	0.0	0.0	2.41640E-03
3	CR	4.90648E 04	1.10223E-02	0.0	0.0	1.10088E-02	4.90648E 04	1.09610E-02	0.0	0.0	1.09476E-02
4	MN55	4.90798E 03	6.42290E-03	0.0	0.0	6.42166E-03	4.90798E 03	6.38720E-03	0.0	0.0	6.38597E-03
5	FE	1.81556E 05	2.08514E-02	0.0	0.0	2.08362E-02	1.81556E 05	2.07355E-02	0.0	0.0	2.07204E-02
6	NI	3.78532E 04	1.07651E-02	0.0	0.0	1.07637E-02	3.78532E 04	1.07053E-02	0.0	0.0	1.07039E-02
7	MO	7.01200E 03	9.71440E-03	0.0	0.0	9.69988E-03	7.01200E 03	9.66040E-03	0.0	0.0	9.64597E-03
8	U235	2.39640E 02	9.27996E-03	7.00102E-03	1.72475E-02	2.27584E-03	2.23073E 02	8.08702E-03	6.09356E-03	1.50087E-02	1.99085E-03
9	U236	0.0	0.0	0.0	0.0	0.0	0.0	0.0	0.0	0.0	0.0
10	U238	1.10036E 05	5.28473E-01	6.03675E-02	1.67967E-01	4.65171E-01	1.09024E 05	5.16080E-01	5.87295E-02	1.63408E-01	4.54497E-01
11	PU239	4.10103E 03	2.68133E-01	2.12979E-01	6.29651E-01	5.50866E-02	4.46404E 03	2.77769E-01	2.18492E-01	6.45318E-01	5.92110E-02
12	PU240	1.23594E 03	3.35199E-02	1.54725E-02	4.70205E-02	1.80376E-02	1.28082E 03	3.49084E-02	1.60812E-02	4.88684E-02	1.88171E-02
13	PU241	6.20494E 02	5.08714E-02	4.30901E-02	1.28548E-01	7.71797E-03	5.46029E 02	4.27946E-02	3.62478E-02	1.08135E-01	6.49354E-03
14	PU242	1.48131E 02	3.09434E-03	1.34041E-03	4.11883E-03	1.74893E-03	1.55754E 02	3.29580E-03	1.42788E-03	4.38762E-03	1.86260E-03
15	FP	0.0	0.0	0.0	0.0	0.0	6.49903E 02	1.10295E-02	0.0	0.0	1.09990E-02
16	B10	9.45951E 02	4.18498E-02	0.0	0.0	4.18498E-02	9.45951E 02	4.16171E-02	0.0	0.0	4.16171E-02
17	B11	9.04279E 01	7.42401E-08	0.0	0.0	7.28041E-08	9.04279E 01	7.38273E-08	0.0	0.0	7.23994E-08
18	C	3.22069E 02	2.23975E-06	0.0	0.0	2.23975E-06	3.22069E 02	2.22730E-06	0.0	0.0	2.22730E-06
19	U23X	0.0	0.0	0.0	0.0	0.0	4.08714E 00	0.0	0.0	0.0	0.0
20	PU24X	0.0	0.0	0.0	0.0	0.0	3.57753E 00	0.0	0.0	0.0	0.0
21	AM24X	0.0	0.0	0.0	0.0	0.0	1.91662E 01	0.0	0.0	0.0	0.0
22	CUFISS	0.0	0.0	0.0	0.0	0.0	3.16689E 02	0.0	0.0	0.0	0.0
	TOTALS	4.29856E 05	9.99678E-01	3.40250E-01	9.94553E-01	6.56298E-01	4.30163E 05	9.99679E-01	3.37072E-01	9.85126E-01	6.59539E-01
OTHER LOSS RATE			3.22342E-04					3.20733E-04			
TOTAL LOSS RATE			1.00000E 00					1.00000E 00			
SYSTEM LOSS RATE(N/SEC)			2.20929E 20					2.22691E 20			
RELATIVE FLUX LEVEL			1.00000E 00					1.00237E 00			

SUMMARY TABLES FOR EXPOSURE ENDING AT TIME 2.555000E 02 DAYS
FOR CASE SUPER SAMPLE PROBLEM.

AVERAGE NEUTRON LOSSES BY NUCLIDE CLASS AND ZONE CLASS - SYSTEM LOSS RATE 2.218098E 20 N/SEC

ZONE CLASS ID.	FISSILE 1	FERTILE 2	O. ACTINIDE 3	FISSION PROD 4	STRUCTURAL 5	COOLANT 6	CONTROL ROD 7	OTHER 0
1	0.0159807	0.2759144	0.0000000	0.0003379	0.0173254	0.0008742	0.0	0.0
2	0.3124873	0.2805544	0.0031955	0.0051987	0.0254068	0.0012490	0.0	0.0
3	0.0	0.0	0.0	0.0	0.0181786	0.0000892	0.0	0.0
4	0.0	0.0	0.0	0.0	0.0009396	0.0002117	0.0417350	0.0
SUM	0.3284680	0.5564688	0.0031955	0.0055366	0.0618505	0.0024240	0.0417350	0.0

ZONE CLASS ID.	ABSORPTION LOSSES	FISSILE INVENTORY (KG) 0.0 DAYS	255.500 DAYS	EFFECTIVE CONVERSION RATIO REACTION RATE	MASS BALANCE	POWER (WATTS)
1	0.3104325	1.827722E 02	6.525757E 02	16.12830	16.20676	2.442696E 08
2	0.6290916	4.778383E 03	4.580566E 03	0.70563	0.67464	2.289310E 09
3	0.0182678	0.0	0.0	0.0	0.0	5.387807E 06
4	0.0428863	0.0	0.0	0.0	0.0	1.735699E 07
OVERALL	0.9996782	4.961152E 03	5.233141E 03	1.45598	1.42573	2.556324E 09
OTHER LOSSES	0.0003218					
TOTAL LOSSES	1.0000000					

FISSILE CONSUMPTION PER UNIT ENERGY GENERATION IS 1.132127E-14 KG/WATT-SEC
FISSILE CONSUMPTION RATE IS 2.894085E-05 KG/SEC

INTERFACE FILE ZNATDN VERSION 1 (OLD) HAS BEEN WRITTEN ON UNIT 17 WITH DENSITIES AT TIME 2.555000E 02 DAYS

SUMMARY OF CALCULATION

MATRIX EXPONENTIAL - EXPOSURE
MAX. STEPS (INTERVALS) USED 1
MIN. STEPS (INTERVALS) USED 1
EQUILIBRIUM CHANGED TO NO EQUILIBRIUM 63

MAX ARRAY SIZE USED 8573 WORDS - FOR ZONE CALCULATION

MAX ARRAY SIZE USED 8573 WORDS

TOTAL CPU TIME USED 0.010 MINUTES TOTAL CLOCK TIME USED 0.094 MINUTES TOTAL I/O USED 27

NORMAL END OF EXPOSURE MODULE

```
RODMOD - CONTROL ROD POSITIONING MODULE - VERSION 1 - JULY 1, 1978 - QUALITY ASSURANCE LEVEL 0
---------------------------------------------------------------------------------------------

RUN TITLE -  SUPER SAMPLE PROBLEM.

DATA HAS BEEN RETRIEVED SUCCESFULLY FROM INTERFACE FILES  CONTRL  RODSET  NDXSRF  ZNATDN    AND  GEODST  (VERSION 1)

THE FOLLOWING RECORDS ON FILE CONTRL HAVE BEEN PROCESSED  DVRINS  PROINS  RODINS

CONTENTS OF RODINS RECORD OF FILE CONTRL

     XX(1)        XX(2)        XX(3)        XX(4)        XX(5)        XX(6)        XX(7)        XX(8)        XX(9)
  0.0          0.0          0.0          0.0          0.0          0.0          0.0          0.0          0.0

IX(1)  IX(2)  IX(3)  IX(4)  IX(5)  IX(6)  IX(7)  IX(8)  IX(9)  IX(10)  IX(11)  IX(12)  IX(13)  IX(14)  IX(15)  IX(16)
   0      0      1      0      0      0      0      2      0      0       0       0       0       0       0       0


                  ACCESS NO.     CYCLE NO.     C.R.P. OPT.  PT.IN HIST.   XXXXXXXXXXX   XXXXXXXXXXX   XXXXXXXXXXX   MEMORY RQED
    LAST ACCESS        1             1             0            1             0             0             0           2303
    THIS ACCESS        2             1             0            1             0             0             0           2303

                  CYCLE TIME   TIME IN CYCL  FRAC IN CYCL   XXXXXXXXXXX   XXXXXXXXXXX   XXXXXXXXXXX   XXXXXXXXXXX   XXXXXXXXXXX
    LAST ACCESS   0.0           0.0          0.0            0.0           0.0           0.0           0.0           0.0
    THIS ACCESS   0.0           2.55500E 02  0.0            0.0           0.0           0.0           0.0           0.0

POSITIONING FOR NRZ SET =  1  NUMBER OF ZONES =  4  FIRST ZONE =  27  LAST ZONE =  24  NUMBER OF INTERCHANGES =  4

POSITIONING FOR NRZ SET =  2  NUMBER OF ZONES =  4  FIRST ZONE =  31  LAST ZONE =  28  NUMBER OF INTERCHANGES =  4

POSITIONING FOR NRZ SET =  3  NUMBER OF ZONES =  4  FIRST ZONE =  35  LAST ZONE =  32  NUMBER OF INTERCHANGES =  4

POSITIONING FOR NRZ SET =  4  NUMBER OF ZONES =  4  FIRST ZONE =  39  LAST ZONE =  36  NUMBER OF INTERCHANGES =  0

POSITIONING FOR NRZ SET =  5  NUMBER OF ZONES =  4  FIRST ZONE =  43  LAST ZONE =  40  NUMBER OF INTERCHANGES =  0

POSITIONING FOR NRZ SET =  6  NUMBER OF ZONES =  4  FIRST ZONE =  47  LAST ZONE =  44  NUMBER OF INTERCHANGES =  0

POSITIONING FOR NRZ SET =  7  NUMBER OF ZONES =  4  FIRST ZONE =  51  LAST ZONE =  48  NUMBER OF INTERCHANGES =  0

NUCLIDE DENSITIES IN ROD-FOLLOWER ZONES

ZONE  27   IN NRZ SET  1   ENTRY  1
I0510I   0.0            I0511I   0.0            I0600I   0.0            I11230   1.84200E-02    I24000   1.39800E-03
I25550   1.32400E-04    I26000   4.81700E-03    I28000   9.55200E-04    I42000   1.08200E-04

ZONE  26   IN NRZ SET  1   ENTRY  2
I0510I   0.0            I0511I   0.0            I0600I   0.0            I11230   1.84200E-02    I24000   1.39800E-03
I25550   1.32400E-04    I26000   4.81700E-03    I28000   9.55200E-04    I42000   1.08200E-04

ZONE  25   IN NRZ SET  1   ENTRY  3
I0510I   0.0            I0511I   0.0            I0600I   0.0            I11230   1.84200E-02    I24000   1.39800E-03
I25550   1.32400E-04    I26000   4.81700E-03    I28000   9.55200E-04    I42000   1.08200E-04

ZONE  24   IN NRZ SET  1   ENTRY  4
I0510I   0.0            I0511I   0.0            I0600I   0.0            I11230   1.84200E-02    I24000   1.39800E-03
I25550   1.32400E-04    I26000   4.81700E-03    I28000   9.55200E-04    I42000   1.08200E-04

ZONE  31   IN NRZ SET  2   ENTRY  6
I0510I   0.0            I0511I   0.0            I0600I   0.0            I11230   1.84200E-02    I24000   1.39800E-03
```

```
ZONE  30   IN NRZ SET  2   ENTRY  7
I0510I   0.0            I0511I   0.0            I0600I   0.0            I11230   1.84200E-02    I24000   1.39800E-03
I25550   1.32400E-04    I26000   4.81700E-03    I28000   9.55200E-04    I42000   1.08200E-04

ZONE  29   IN NRZ SET  2   ENTRY  8
I0510I   0.0            I0511I   0.0            I0600I   0.0            I11230   1.84200E-02    I24000   1.39800E-03
I25550   1.32400E-04    I26000   4.81700E-03    I28000   9.55200E-04    I42000   1.08200E-04

ZONE  28   IN NRZ SET  2   ENTRY  9
I0510I   0.0            I0511I   0.0            I0600I   0.0            I11230   1.84200E-02    I24000   1.39800E-03
I25550   1.32400E-04    I26000   4.81700E-03    I28000   9.55200E-04    I42000   1.08200E-04

ZONE  35   IN NRZ SET  3   ENTRY 11
I0510I   0.0            I0511I   0.0            I0600I   0.0            I11230   1.84200E-02    I24000   1.39800E-03
I25550   1.32400E-04    I26000   4.81700E-03    I28000   9.55200E-04    I42000   1.08200E-04

ZONE  34   IN NRZ SET  3   ENTRY 12
I0510I   0.0            I0511I   0.0            I0600I   0.0            I11230   1.84200E-02    I24000   1.39800E-03
I25550   1.32400E-04    I26000   4.81700E-03    I28000   9.55200E-04    I42000   1.08200E-04

ZONE  33   IN NRZ SET  3   ENTRY 13
I0510I   0.0            I0511I   0.0            I0600I   0.0            I11230   1.84200E-02    I24000   1.39800E-03
I25550   1.32400E-04    I26000   4.81700E-03    I28000   9.55200E-04    I42000   1.08200E-04

ZONE  32   IN NRZ SET  3   ENTRY 14
I0510I   0.0            I0511I   0.0            I0600I   0.0            I11230   1.84200E-02    I24000   1.39800E-03
I25550   1.32400E-04    I26000   4.81700E-03    I28000   9.55200E-04    I42000   1.08200E-04

ZONE  39   IN NRZ SET  4   ENTRY 16
I0510I   2.91100E-02    I0511I   2.53100E-03    I0600I   8.27000E-03    I11230   0.0            I24000   0.0
I25550   0.0            I26000   0.0            I28000   0.0            I42000   0.0

ZONE  38   IN NRZ SET  4   ENTRY 17
I05101   2.91100E-02    I0511I   2.53100E-03    I0600I   8.27000E-03    I11230   0.0            I24000   0.0
I25550   0.0            I26000   0.0            I28000   0.0            I42000   0.0

ZONE  37   IN NRZ SET  4   ENTRY 18
I0510I   2.91100E-02    I0511I   2.53100E-03    I0600I   8.27000E-03    I11230   0.0            I24000   0.0
I25550   0.0            I26000   0.0            I28000   0.0            I42000   0.0

ZONE  36   IN NRZ SET  4   ENTRY 19
I0510I   2.91100E-02    I0511I   2.53100E-03    I0600I   8.27000E-03    I11230   0.0            I24000   0.0
I25550   0.0            I26000   0.0            I28000   0.0            I42000   0.0

ZONE  43   IN NRZ SET  5   ENTRY 21
I0510I   0.0            I0511I   0.0            I0600I   0.0            I11230   1.84200E-02    I24000   1.39800E-03
I25550   1.32400E-04    I26000   4.81700E-03    I28000   9.55200E-04    I42000   1.08200E-04

ZONE  42   IN NRZ SET  5   ENTRY 22
I0510I   0.0            I0511I   0.0            I0600I   0.0            I11230   1.84200E-02    I24000   1.39800E-03
I25550   1.32400E-04    I26000   4.81700E-03    I28000   9.55200E-04    I42000   1.08200E-04

ZONE  41   IN NRZ SET  5   ENTRY 23
I0510I   0.0            I0511I   0.0            I0600I   0.0            I11230   1.84200E-02    I24000   1.39800E-03
I25550   1.32400E-04    I26000   4.81700E-03    I28000   9.55200E-04    I42000   1.08200E-04

ZONE  40   IN NRZ SET  5   ENTRY 24
I0510I   0.0            I0511I   0.0            I0600I   0.0            I11230   1.84200E-02    I24000   1.39800E-03
I25550   1.32400E-04    I26000   4.81700E-03    I28000   9.55200E-04    I42000   1.08200E-04

ZONE  47   IN NRZ SET  6   ENTRY 26
I0510I   0.0            I0511I   0.0            I0600I   0.0            I11230   1.84200E-02    I24000   1.39800E-03
I25550   1.32400E-04    I26000   4.81700E-03    I28000   9.55200E-04    I42000   1.08200E-04
```

```
ZONE  46   IN NRZ SET  6   ENTRY 27
I0510I   0.0            I0511I   0.0            I0600I   0.0            I11230   1.84200E-02    I24000   1.39800E-03
I25550   1.32400E-04    I26000   4.81700E-03    I28000   9.55200E-04    I42000   1.08200E-04

ZONE  45   IN NRZ SET  6   ENTRY 28
I0510I   0.0            I0511I   0.0            I0600I   0.0            I11230   1.84200E-02    I24000   1.39800E-03
I25550   1.32400E-04    I26000   4.81700E-03    I28000   9.55200E-04    I42000   1.08200E-04

ZONE  44   IN NRZ SET  6   ENTRY 29
I0510I   0.0            I0511I   0.0            I0600I   0.0            I11230   1.84200E-02    I24000   1.39800E-03
I25550   1.32400E-04    I26000   4.81700E-03    I28000   9.55200E-04    I42000   1.08200E-04

ZONE  51   IN NRZ SET  7   ENTRY 31
I0510I   0.0            I0511I   0.0            I0600I   0.0            I11230   1.84200E-02    I24000   1.39800E-03
I25550   1.32400E-04    I26000   4.81700E-03    I28000   9.55200E-04    I42000   1.08200E-04

ZONE  50   IN NRZ SET  7   ENTRY 32
I0510I   0.0            I0511I   0.0            I0600I   0.0            I11230   1.84200E-02    I24000   1.39800E-03
I25550   1.32400E-04    I26000   4.81700E-03    I28000   9.55200E-04    I42000   1.08200E-04

ZONE  49   IN NRZ SET  7   ENTRY 33
I0510I   0.0            I0511I   0.0            I0600I   0.0            I11230   1.84200E-02    I24000   1.39800E-03
I25550   1.32400E-04    I26000   4.81700E-03    I28000   9.55200E-04    I42000   1.08200E-04

ZONE  48   IN NRZ SET  7   ENTRY 34
I0510I   0.0            I0511I   0.0            I0600I   0.0            I11230   1.84200E-02    I24000   1.39800E-03
I25550   1.32400E-04    I26000   4.81700E-03    I28000   9.55200E-04    I42000   1.08200E-04

TOTAL CPU TIME IS  0.005 MINUTES AND TOTAL CLOCK TIME IS   0.080 MINUTES
```

```
RATER - REACTION RATE MODULE - AUGUST 23, 1979   - QUALITY ASSURANCE LEVEL 0
-------------------------------------------------------------------------------

CASE TITLE -  SUPER SAMPLE PROBLEM.

REACTION RATE MODULE INSTRUCTIONS (RRTINS) ARE NOT ON CONTRL - DEFAULT TO MINIMUM OUTPUT

RITE CONTAINER ARRAYS, CONTROL       6 DATA       1

TITLE OF THE LATEST VERSION CROSS SECTION FILE
          LCCEWG METHODS BENCHMARK PROBLEM 3 LIBRARY - R PROTSIK (GE-ARSD)

MAXIMUM ARRAY SIZE USED FOR INITIAL PROCESSING IS    2034

STORAGE REQUIRED FOR BASIC DATA IS     1593

         STORAGE SUPPLIED IS   220000
MAXIMUM STORAGE REQUIRED IS    25370
MINIMUM STORAGE REQUIRED IS     4202

 MODZSZ =  0 MODZ   =  0 MODZC  =  0

INTERFACE FILE ZNATDN VERSION   1 UNIT  17
 TIME  =  5.110000E 02
 NCY   =      0        NTZSZ =     52
 NNS   =     19        NBLKAD=      1

INTERFACE FILE RZFLUX VERSION   1 UNIT  19
 TIME  =  2.555000E 02 POWER =  2.130166E 08
 VOL   =  1.112033E 07 EFFK  =  9.898390E-01
 EIVS  =  0.0          DKDS  =  0.0
 TNL   =  1.848381E 19 TNA   =  1.847644E 19
 TNSL  =  7.356734E 15 TNBL  =  0.0
 TNBAL =  8.999654E 16 TNCRA =  0.0
 FC    =  8.333331E-02 CRTF  =  1.000000E 00
 X3    =  1.000000E 00 X4    =  0.0
 ITPS  =      1        NZONE =     52
 NGROUP=      4        NCY   =      0
```

TOTAL REACTION RATE BY UNIQUE ISOTOPE FOR WHOLE REACTOR
NORMALIZED WITH 2.218058E 20

POS.	NAME	ABSORPTION	FISSION	PRODUCTION	CAPTURE(N,G)	(N,2N)
1	A0816	8.670599E-04	0.0	0.0	8.670599E-04	0.0
2	A1123	9.051585E-04	0.0	0.0	9.050309E-04	1.278590E-07
3	A2400	3.364970E-03	0.0	0.0	3.362503E-03	2.465721E-06
4	A2555	1.711368E-03	0.0	0.0	1.711154E-03	2.151180E-07
5	A2600	6.532121E-03	0.0	0.0	6.529607E-03	2.508184E-06
6	A2800	3.023095E-03	0.0	0.0	3.022857E-03	2.385538E-07
7	A4200	2.415488E-03	0.0	0.0	2.412776E-03	2.711366E-06
8	A9235	4.578825E-03	3.390115E-03	8.323692E-03	1.187905E-03	8.110590E-07
9	A9236	0.0	0.0	0.0	0.0	0.0
10	A9238	2.823856E-01	1.975003E-02	5.480910E-02	2.617303E-01	9.054425E-04
11	A9439	3.946351E-02	2.787034E-02	8.134514E-02	1.158958E-02	3.577021E-06
12	A9440	4.723661E-04	1.180346E-04	3.535338E-04	3.542788E-04	5.329670E-08
13	A9441	3.180225E-05	2.622388E-05	7.778362E-05	5.562833E-06	1.554557E-08
14	A9442	1.013616E-07	2.323806E-08	7.076568E-08	7.805392E-08	6.974336E-11
15	A9999	1.658590E-03	0.0	0.0	1.657199E-03	1.390164E-06
16	B0816	2.369934E-03	0.0	0.0	2.369934E-03	0.0
17	B1123	1.252718E-03	0.0	0.0	1.252052E-03	6.663491E-07
18	B2400	4.722442E-03	0.0	0.0	4.712049E-03	1.039725E-05
19	B2555	1.179935E-03	0.0	0.0	1.178973E-03	9.621726E-07
20	B2600	9.071905E-03	0.0	0.0	9.059981E-03	1.192751E-05
21	B2800	5.516753E-03	0.0	0.0	5.515672E-03	1.083474E-06
22	B4200	2.526066E-03	0.0	0.0	2.514958E-03	1.110825E-05
23	B9235	3.054811E-03	2.362842E-03	5.845185E-03	6.903333E-04	1.636537E-06
24	B9236	0.0	0.0	0.0	0.0	0.0
25	B9238	2.405401E-01	3.919347E-02	1.091703E-01	1.993971E-01	1.949564E-03
26	B9439	2.526512E-01	1.994362E-01	5.890921E-01	5.315466E-02	6.034848E-05
27	B9440	3.523306E-02	1.579871E-02	4.797191E-02	1.942456E-02	9.783585E-06
28	B9441	3.969409E-02	3.355617E-02	1.000570E-01	6.091040E-03	4.685986E-05
29	B9442	3.346993E-03	1.402383E-03	4.307106E-03	1.939424E-03	5.186354E-06
30	B9999	1.469942E-02	0.0	0.0	1.465951E-02	3.990381E-05
31	I0510I	0.0	0.0	0.0	0.0	0.0
32	I0511I	0.0	0.0	0.0	0.0	0.0
33	I0600I	0.0	0.0	0.0	0.0	0.0
34	I11230	3.486674E-04	0.0	0.0	3.485542E-04	1.131676E-07
35	I24000	3.211265E-04	0.0	0.0	3.207184E-04	4.082095E-07
36	I25550	1.414424E-04	0.0	0.0	1.414056E-04	3.689036E-08
37	I26000	5.849586E-04	0.0	0.0	5.845132E-04	4.461363E-07
38	I28000	2.987830E-04	0.0	0.0	2.987420E-04	4.124840E-08
39	I42000	2.007182E-04	0.0	0.0	2.002774E-04	4.408457E-07
40	Q1123	8.551302E-05	0.0	0.0	8.551219E-05	8.283791E-10
41	Q2400	2.127005E-03	0.0	0.0	2.126859E-03	1.457029E-07
42	Q2555	2.635677E-03	0.0	0.0	2.635665E-03	1.203256E-08
43	Q2600	3.810333E-03	0.0	0.0	3.810193E-03	1.395263E-07
44	Q2800	1.565152E-03	0.0	0.0	1.565138E-03	1.341392E-08
45	Q4200	3.565009E-03	0.0	0.0	3.564849E-03	1.609346E-07
46	U23X	0.0	0.0	0.0	0.0	0.0
47	PU24X	0.0	0.0	0.0	0.0	0.0
48	AM24X	0.0	0.0	0.0	0.0	0.0
49	CUFISS	0.0	0.0	0.0	0.0	0.0
	TOTALS	9.789538E-01	3.429046E-01	1.001352E 00	6.329786E-01	3.070943E-03

TOTAL REACTION RATE AND POWER PRODUCTION BY ABSOLUTE ISOTOPE FOR WHOLE REACTOR
REACTION RATES HAVE UNITS OF EVENTS/SEC

POS.	IDENTIFIER ABSOLUTE	INVENTORY (KGS)	ABSORPTION	FISSION	PRODUCTION	CAPTURE(N,G)	FISS. POWER (WATTS)	CAPT. POWER (WATTS)
1	O16	1.517266E 04	7.179841E 17	0.0	0.0	7.179841E 17	0.0	4.764899E 05
2	NA23	1.792512E 04	5.749335E 17	0.0	0.0	5.747321E 17	0.0	1.072794E 06
3	CR	4.930072E 04	2.336844E 18	0.0	0.0	2.333867E 18	0.0	3.454352E 06
4	MN55	4.931602E 03	1.257288E 18	0.0	0.0	1.257017E 18	0.0	1.464423E 06
5	FE	1.824291E 05	4.435965E 18	0.0	0.0	4.432633E 18	0.0	5.546993E 06
6	NI	3.803514E 04	2.307619E 18	0.0	0.0	2.307314E 18	0.0	3.433508E 06
7	MO	7.045715E 03	1.931325E 18	0.0	0.0	1.928127E 18	0.0	2.628225E 06
8	U235	2.077069E 02	1.693185E 18	1.276039E 18	3.142741E 18	4.166043E 17	3.966434E 07	4.361843E 05
9	U236	0.0	0.0	0.0	0.0	0.0	0.0	0.0
10	U238	1.080107E 05	1.159880E 20	1.307401E 19	3.637158E 19	1.022808E 20	4.149819E 08	9.432310E 07
11	PU239	4.810742E 03	6.479272E 19	5.041792E 19	1.487069E 20	1.436065E 19	1.615896E 09	1.503559E 07
12	PU240	1.334033E 03	7.919672E 18	3.530427E 18	1.071887E 19	4.387061E 18	1.130055E 08	3.683375E 06
13	PU241	4.844092E 02	8.811435E 18	7.448771E 18	2.221047E 19	1.352262E 18	2.413253E 08	1.364430E 06
14	PU242	1.620248E 02	7.424052E 17	3.110620E 17	9.553573E 17	4.301927E 17	9.997534E 06	3.802301E 05
15	FP	1.300247E 03	3.628302E 18	0.0	0.0	3.619141E 18	0.0	4.933246E 06
16	B10	0.0	0.0	0.0	0.0	0.0	0.0	0.0
17	B11	0.0	0.0	0.0	0.0	0.0	0.0	0.0
18	C	0.0	0.0	0.0	0.0	0.0	0.0	0.0
19	U23X	7.879253E 00	0.0	0.0	0.0	0.0	0.0	0.0
20	PU24X	7.311152E 00	0.0	0.0	0.0	0.0	0.0	0.0
21	AM24X	3.610321E 01	0.0	0.0	0.0	0.0	0.0	0.0
22	CUFISS	6.335945E 02	0.0	0.0	0.0	0.0	0.0	0.0
	TOTALS		2.171376E 20	7.605823E 19	2.221059E 20	1.403983E 20	2.434870E 09	1.382330E 08

		(N,2N)
1	O16	0.0
2	NA23	2.014450E 14
3	CR	2.975943E 15
4	MN55	2.719815E 14
5	FE	3.331824E 15
6	NI	3.053577E 14
7	MO	3.198750E 15
8	U235	5.428908E 14
9	U236	0.0
10	U238	6.332571E 17
11	PU239	1.417905E 16
12	PU240	2.181877E 15
13	PU241	1.039724E 16
14	PU242	1.150379E 15
15	FP	9.159245E 15
16	B10	0.0
17	B11	0.0
18	C	0.0
19	U23X	0.0
20	PU24X	0.0
21	AM24X	0.0
22	CUFISS	0.0
	TOTALS	6.811531E 17

SUPER SAMPLE PROBLEM.

SUMMARY TABLE OF NEUTRON LOSSES FLUX WEIGHTED
NORMALIZED WITH 2.218058E 20 K-EFFECTIVE IS 0.989839

ZONE CLASS ID.	FISSILE 1	FERTILE 2	O. ACTINIDE 3	FISSION PROD 4	STRUCTURAL 5	COOLANT 6	CONTROL ROD 7	OTHER 0
1	0.0440741	0.2828579	0.0000001	0.0016586	0.0179141	0.0009052	0.0	0.0
2	0.2954000	0.2757731	0.0033470	0.0146994	0.0253870	0.0012527	0.0	0.0
3	0.0	0.0	0.0	0.0	0.0137032	0.0000855	0.0	0.0
4	0.0	0.0	0.0	0.0	0.0015470	0.0003487	0.0	0.0
SUM	0.3394741	0.5586310	0.0033471	0.0163580	0.0585513	0.0025921	0.0	0.0

SUMMARY TABLE OF OTHER INFORMATION

ZONE CLASS ID.	ABSORPTION LOSSES	FISSILE INVENTORY (KGS)	CONVERSION RATIO	FISSION POWER (WATTS)	TOTAL POWER (WATTS)
1	0.3474098	1.096586E 03	5.94645	3.615736E 08	4.242337E 08
2	0.6158591	4.406273E 03	0.74076	2.073296E 09	2.144194E 09
3	0.0137887	0.0	0.0	0.0	4.066700E 06
4	0.0018957	0.0	0.0	0.0	6.075388E 05
SUM	0.9789532	5.502859E 03	1.41662	2.434870E 09	2.573102E 09
OTHER LOSSES	0.0210468				
TOTAL LOSSES	1.0000000				

A BETTER ESTIMATE OF THE FUEL CONVERSION RATIO FOR A CRITICAL SYSTEM IS 1.38634
(BUT NOT MADE CRITICAL BY CHANGING CONTROL ABSORPTIONS OR LEAKAGE)

FISSILE CONSUMPTION/UNIT ENERGY GENERATION IS 1.162241E-14 KGS/WATT-SEC
FISSILE CONSUMPTION RATE IS 2.990566E-05 KGS/SEC

PRIMITIVE DOUBLING TIME (YEARS) OF THE ABOVE FISSILE INVENTORY (ONE PLANT) IS 15.09240

NOTE - CONVERSION RATIO = (CAPTURE IN FERTILE)/(ABSORPTION IN FISSILE)

```
                    PERTUBAT - PERTURBATION MODULE - VERSION 1 - APRIL 1, 1978 - QUALITY ASSURANCE LEVEL 0
                    ------------------------------------------------------------------------------------

RUN TITLE -  SUPER SAMPLE PROBLEM.


      +-------------------------------------------------------------------------------------------------------------+
      | CALCULATED DERIVATIVES (DELTA K)/(K DELTA X) AND THE CHANGES FOR PERTURBATIONS (DELTA K)K ARE REACTIVITY EFFECTS |
      | ESTIMATED BY APPLICATION OF FIRST ORDER PERTURBATION THEORY, NORMALLY PRECISE ONLY IN THE LIMIT OF NO CHANGE. IT |
      | IS ASSUMED THAT APPLICABLE, CONSISTENT REGULAR AND ADJOINT FLUX DISTRIBUTIONS, GEOMETRIC DESCRIPTION, CROSS      |
      | SECTIONS, AND NUCLIDE CONCENTRATIONS AND ASSOCIATIONS ARE SUPPLIED FOR A PROBLEM. OTHERWISE THE RESULTS MAY NOT  |
      | HAVE A SENSIBLE INTERPRETATION, OR PERHAPS HAVE A SPECIAL INTERPRETATION WHICH INVALIDATES THE LABELS.           |
      +-------------------------------------------------------------------------------------------------------------+


*****INTERFACE FILE DLAYXS DOES NOT EXIST - WILL NOT DO BETA-EFFECTIVE CALCULATION  DLAYXS  DLAYXS

REFERENCE REAL TIME FROM ZNATDN INTERFACE FILE =  5.11000E 02 DAYS
GEOMETRY NO. 17   3-D TRIAGONAL-Z
TRIAGONAL OPTION  1   PARALLELOGRAM - 60 DEGREE
NUMBER OF ENERGY GROUPS                                  4
NUMBER OF UPSCATTER GROUPS (MAX)                         0
NUMBER OF DOWNSCATTER GROUPS (MAX)                       3
NUMBER OF INTERVALS IN DIMENSION 1 (COLUMNS)            50
NUMBER OF INTERVALS IN DIMENSION 2 (ROWS)               25
NUMBER OF INTERVALS IN DIMENSION 3 (PLANES)              4
NUMBER OF ZONES                                         52
NUMBER OF REGIONS                                      123
NUMBER OF BLACK ABSORBER ZONES                           1
BOUNDARY INDICATORS-   LEFT  1  RIGHT  2
                        TOP  1 BOTTOM  2
                      FRONT  2   REAR  1


                                    MEMORY REQUIREMENTS FOR DATA STORAGE

                                        MINIMUM   MAXIMUM
STORAGE AVAILABLE                        220000
MACRO CALCULATION                          9094
EQUATION CONSTANTS CALCULATION
          CORE CONTAINED OR SPACE STORED  32304     33554
          PLANE STORED                    15829     17079
          ROW STORED                       6019      7269
PERTURBATION CALCULATION                   7420     47725

DATA WILL BE STORED FOR 1 GROUP, ALL SPACE

MEMORY LOCATIONS RESERVED FOR DATA STORAGE---  220000
MAX MEMORY LOCATIONS REQUIRED FOR THIS PROB--   47725
MEMORY LOCATIONS NOT USED--------------------  172275

     SPECIAL SCRATCH DATASET REQUIREMENTS
     MAXIMUM PHYSICAL RECORD IS     7200 WORDS

RITE CONTAINER ARRAYS, CONTROL      36 DATA  172229
FILE 27 DEFAULTS TO CORE - NO.RECS, REC.LNTH, TOT.LNTH, START LOC, CORE LEFT.     16   2500  40000      1 132229
FILE 28 DEFAULTS TO CORE - NO.RECS, REC.LNTH, TOT.LNTH, START LOC, CORE LEFT.     16   2500  40000  40001  92229
DIRECT ACCESS FILE 29  REQUIRES     4 RECORDS     3952 WORDS IN LENGTH
```

INTEGRAL NEUTRON BALANCE (REACTION RATE) INFORMATION FOR FLUX, ADJOINT WEIGHTING CONDITIONS.

	PRODUCTION	ABSORPTION	BLACK ABS.	LEAKAGE	KEFFECTIVE
FORWARD FLUX	1.83622D 19	1.80095D 19	7.53598D 16	8.80950D 15	1.0148359
ADJOINT FLUX	1.83622D 19	1.80601D 19	2.99264D 16	3.71369D 15	1.0148366
FROM RTFLUX					1.0148363
FROM ATFLUX					1.0148363

REGULAR, ADJOINT FLUX INTEGRALS---(DELTA K)/(K*DELTA S) WHERE S REPERSENTS MACRO. CROSS SECTIONS. BIG DADDY = 1.837620D-13

ZONE	GRP	SIGA,SIGR,DB**2	B**2	NU*SIGF	DIFF. COEF.
1	1	-2.441967E-01	-5.135865E-01	2.244872E-01	-7.320936E-04
	2	-8.175779E-01	-9.615229E-01	1.054708E 00	-1.692573E-03
	3	-4.692774E-01	-3.774093E-01	9.090056E-01	-4.944426E-04
	4	-6.309313E-02	-5.000546E-02	1.285374E-01	5.305695E-05
2	1	-9.758749E-01	-2.050842E 00	9.053759E-01	-4.460784E-04
	2	-3.076810E 00	-3.615846E 00	3.790525E 00	-7.838050E-04
	3	-1.705653E 00	-1.371011E 00	2.862216E 00	2.672768E-04
	4	-2.335574E-01	-1.839558E-01	3.900612E-01	1.479451E-04
3	1	-1.227083E 00	-2.578311E 00	1.131970E 00	-1.464203E-03
	2	-3.952255E 00	-4.644130E 00	4.999063E 00	-3.194553E-03
	3	-2.271612E 00	-1.825676E 00	4.095966E 00	-4.767806E-04
	4	-3.123943E-01	-2.454960E-01	5.478168E-01	1.249967E-04
4	1	-2.174533E-01	-4.573190E-01	2.002894E-01	-1.292965E-03
	2	-7.319416E-01	-8.607771E-01	9.346310E-01	-3.335302E-03
	3	-4.138679E-01	-3.328359E-01	7.864254E-01	-1.344472E-03
	4	-5.722169E-02	-4.532901E-02	1.155915E-01	-5.139079E-05
5	1	-1.089835E-01	-2.292761E-01	1.000940E-01	-4.158374E-04
	2	-3.720605E-01	-4.376559E-01	4.826197E-01	-9.980069E-04
	3	-2.131856E-01	-1.714876E-01	4.224629E-01	-3.322193E-04
	4	-2.859256E-02	-2.266843E-02	6.217664E-02	2.142299E-05
6	1	-4.445420E-01	-9.347662E-01	4.118882E-01	-4.190623E-04
	2	-1.430374E 00	-1.681839E 00	1.772171E 00	-9.542238E-04
	3	-7.968872E-01	-6.409044E-01	1.362406E 00	-1.415688E-04
	4	-1.109889E-01	-8.787942E-02	1.946091E-01	6.066759E-05
7	1	-5.368640E-01	-1.128798E 00	4.943965E-01	-1.010569E-03
	2	-1.782486E 00	-2.095788E 00	2.273287E 00	-2.383722E-03
	3	-1.026840E 00	-8.256583E-01	1.908074E 00	-6.266935E-04
	4	-1.432928E-01	-1.132825E-01	2.708554E-01	4.823763E-05
8	1	-1.019248E-01	-2.144198E-01	9.381855E-02	-7.025171E-04
	2	-3.489818E-01	-4.104999E-01	4.473912E-01	-1.823717E-03
	3	-1.970672E-01	-1.585182E-01	3.810125E-01	-7.522616E-04
	4	-2.709530E-02	-2.154098E-02	5.815316E-02	-3.103731E-05
9	1	-2.155577E-03	-4.536774E-03	1.920664E-03	-4.632276E-05
	2	-1.089677E-02	-1.282107E-02	1.634404E-02	-1.546804E-04
	3	-6.386410E-03	-5.139911E-03	2.048080E-02	-8.448939E-05
	4	-9.723441E-04	-7.781051E-04	4.418883E-03	-1.013376E-05
10	1	-1.080436E-02	-2.273815E-02	9.732485E-03	-1.754777E-04
	2	-5.133702E-02	-6.040174E-02	7.248443E-02	-5.483464E-04
	3	-2.965526E-02	-2.386129E-02	7.983184E-02	-2.887687E-04
	4	-5.173489E-03	-4.135009E-03	1.854281E-02	-3.941100E-05
11	1	-1.263312E-02	-2.658677E-02	1.132216E-02	-2.138205E-04
	2	-6.079670E-02	-7.153189E-02	8.823860E-02	-6.949075E-04
	3	-3.596460E-02	-2.893782E-02	1.037178E-01	-3.797377E-04
	4	-6.042186E-03	-4.828557E-03	2.276115E-02	-5.045797E-05
12	1	-2.195592E-03	-4.620969E-03	1.965413E-03	-4.908124E-05

```
                1.205753E-01  3.496626E-03  7.835252E-06  0.0
  3        4   4.540469E-01  1.715358E 00  2.341287E 00  3.970042E-01  1.982734E-01  7.780666E-01  1.013547E 00  1.822358E-01
               4.517134E-03  2.219855E-02  2.742872E-02  4.589044E-03  3.215511E 00  6.264707E 00  4.820518E 00  1.553652E 00
               3.019988E 00  2.419981E 00  2.932589E-02  5.845135E-02  4.642700E-02  1.355037E-02  7.160648E-04  2.081682E-01
               9.802067E-02  5.874135E-03  1.506155E-05  5.202109E-01  2.487996E-01  1.022763E-02  3.361108E-05  2.087615E-01
               9.885484E-02  4.121203E-03  1.430539E-05  3.866100E-01  1.855741E-01  7.593591E-03  2.404884E-05  7.157111E-02
               3.451377E-02  1.521763E-03  5.290402E-06  7.170504E-02  3.459014E-02  1.498000E-03  5.134883E-06  1.480348E-01
               7.489669E-02  3.111262E-03  9.090118E-06  0.0
  4        4   6.309313E-02  2.335574E-01  3.123943E-01  5.722169E-02  2.850256E-02  1.109889E-01  1.432928E-01  2.709530E-02
               9.723441E-04  5.173489E-03  6.042186E-03  1.036545E-03  3.188962E-01  6.185982E-01  4.488817E-01  1.570655E-01
               3.042964E-01  2.284261E-01  6.769925E-03  1.372495E-02  1.017215E-02  5.910091E-03  7.518535E-04  4.373421E-02
               2.120535E-02  1.942996E-03  1.673822E-05  1.077135E-01  5.283191E-02  3.291201E-03  3.703394E-05  4.385439E-02
               2.133683E-02  1.337324E-03  1.587813E-05  7.900858E-02  3.890589E-02  2.425160E-03  2.622174E-05  1.506651E-02
               7.463142E-03  4.900743E-04  5.878011E-06  1.509503E-02  7.477403E-03  4.807955E-04  5.702237E-06  2.876044E-02
               1.479964E-02  9.761346E-04  9.770258E-06  0.0

PROMPT-NEUTRON LIFETIME IS  3.41004D-07  SEC.

     PERTURBATION INTERFACE FILE PERTUB HAS BEEN WRITTEN ON NEW UNIT NUMBER  34

UNIT NUMBERS FOR FILES ZNATDN,GRUPXS, AND NDXSRF FOR OPTION IX(8) ARE    17    11    16

TITLE FROM CROSS SECTION FILE /LCCEWG METHODS BENCHMARK PROBLEM 3 LIBRARY - R PROTSIK (GE-ARSD)

==========MEMORY REQUIRED FOR CROSS SECTION CALCULATION FOR NUCLIDE BASIS IS      9093

USER JOB NAME AND DATE ON FILE PERTUB ARE  TBFA      03-31-81

MEMORY USED FOR DELTA K/DELTA N IS 10037


(N DELTA K)/(K DELTA N) FOR UNIQUE   NUCLIDE NAMES FOR EACH ZONE

ZONE   1
A0816  -1.27286E-03   A1123  -1.83483E-04   A2400  -2.17401E-05   A2555  -3.08021E-05   A2600  -4.75622E-05   A2800  -8.40058E-05
A4200  -4.61932E-05   A9235   2.27236E-04   A9238  -4.74991E-03   A9439   2.30822E-03   A9440   1.99238E-06   A9441   1.39391E-06
A9442   7.31765E-11   A9999  -2.84167E-05   U23X    0.0           PU24X   0.0           AM24X   0.0           CUFISS  0.0
TOTAL FOR ZONE IS -3.92613E-03

ZONE   2
A0816  -7.72123E-03   A1123  -1.39793E-03   A2400  -5.10748E-04   A2555  -1.54049E-04   A2600  -1.41173E-03   A2800  -6.73871E-04
A4200  -2.22192E-04   A9235   6.29366E-04   A9238  -2.11886E-02   A9439   1.07344E-02   A9440   1.23310E-05   A9441   1.39157E-05
A9442   6.22153E-10   A9999  -2.73572E-04   U23X    0.0           PU24X   0.0           AM24X   0.0           CUFISS  0.0
TOTAL FOR ZONE IS -2.21638E-02

ZONE   3
A0816  -9.13722E-03   A1123  -1.49382E-03   A2400  -5.05315E-04   A2555  -1.72473E-04   A2600  -1.37068E-03   A2800  -7.41075E-04
A4200  -2.74373E-04   A9235   8.63973E-04   A9238  -2.66781E-02   A9439   1.69125E-02   A9440   2.11358E-05   A9441   2.89429E-05
A9442   1.11408E-09   A9999  -3.81188E-04   U23X    0.0           PU24X   0.0           AM24X   0.0           CUFISS  0.0
TOTAL FOR ZONE IS -2.29277E-02

ZONE   4
A0816   2.99349E-04   A1123   1.75716E-04   A2400   1.38966E-04   A2555  -4.45879E-06   A2600   4.16579E-04   A2800   7.93265E-05
A4200  -2.20166E-05   A9235   2.00468E-04   A9238  -2.47270E-03   A9439   2.14215E-03   A9440   2.71042E-06   A9441   1.42453E-06
A9442   2.10503E-10   A9999  -1.93567E-05   U23X    0.0           PU24X   0.0           AM24X   0.0           CUFISS  0.0
TOTAL FOR ZONE IS  9.38163E-04

ZONE   5
A0816  -4.34112E-04   A1123  -5.52277E-05   A2400   8.72329E-06   A2555  -1.28567E-05   A2600   3.19173E-05   A2800  -2.14004E-05
A4200  -1.86552E-05   A9235   1.13757E-04   A9238  -1.97483E-03   A9439   7.69892E-04   A9440   4.85752E-07   A9441   2.23475E-07
A9442   1.01386E-11   A9999  -7.31008E-06   U23X    0.0           PU24X   0.0           AM24X   0.0           CUFISS  0.0
TOTAL FOR ZONE IS -1.59939E-03

ZONE   6
A0816  -3.25482E-03   A1123  -5.87488E-04   A2400  -1.92046E-04   A2555  -7.05219E-05   A2600  -5.25167E-04   A2800  -2.72615E-04
```

```
                    VENTURE - NEUTRONICS MODULE -VERS 3- JANUARY 1,1981 --- QUALITY ASSURANCE LEVEL 1
                    ---------------------------------------------------------------------------------

RUN TITLE -  SUPER SAMPLE PROBLEM.

STORAGE REQUIRED FOR CROSS SECTION CHECK     894 WORDS

TITLE OF THE LATEST VERSION CROSS SECTION FILE
        LCCEWG METHODS BENCHMARK PROBLEM 3 LIBRARY - R PROTSIK (GE-ARSD)

CROSS SECTION CHECK COMPLETED NORMALLY

REFERENCE REAL TIME FROM ZNATDN INTERFACE FILE =  5.11000E 02 DAYS

SOLUTION BY FINITE-DIFFERENCE DIFFUSION THEORY
FIXED SOURCE ADJOINT PROBLEM
GEOMETRY NO. 17   3-D TRIAGONAL-Z
TRIAGONAL OPTION  1   PARALLELOGRAM - 60 DEGREE
NUMBER OF ENERGY GROUPS                              4
NUMBER OF UPSCATTER GROUPS (MAX)                     0
NUMBER OF DOWNSCATTER GROUPS (MAX)                   3
NUMBER OF INTERVALS IN DIMENSION 1 (COLUMNS)        50
NUMBER OF INTERVALS IN DIMENSION 2 (ROWS)           25
NUMBER OF INTERVALS IN DIMENSION 3 (PLANES)          4
NUMBER OF ZONES                                     52
NUMBER OF REGIONS                                  123
NUMBER OF BLACK ABSORBER ZONES                       1
BOUNDARY INDICATORS-    LEFT  1  RIGHT  2
                         TOP  1 BOTTOM  2
                       FRONT  2   REAR  1


                                   MEMORY REQUIREMENTS FOR DATA STORAGE

                                        TOTAL                A         B         C         D
                                   MINIMUM   MAXIMUM
STORAGE AVAILABLE                   220000
MACRO CALCULATION                     3050
EQUATION CONSTANTS CALCULATION
          CORE CONTAINED OR SPACE STORED     32304     33554
          PLANE STORED                       15829     17079
          ROW STORED                          6019      7269
          MULTI-LEVEL PLANE STORED           17053     18303
INITIAL FLUX
          CORE CONTAINED OR SPACE STORED     14531     18281
          OTHER MODES                         4531      8281
ITERATIVE PROCESS
          CORE CONTAINED                    208540            177504      2195      2290     26551
          SPACE STORED                       69580             66551      2195       834         0
        4 PLANES STORED                      70885             67856      2195       834         0
        1 PLANE STORED                       25657             22628      2195       834         0
       25 ROWS STORED                        19629             16600      2195       834         0
        1 ROW STORED                          3029                 0      2195       834         0
        4 MULTI-LEVEL PLANES STORED          80781              7500      2195       834     70252
PERTURBATION CALCULATION                      8540

DATA WILL BE STORED FOR ALL GROUPS, ALL SPACE

MEMORY LOCATIONS RESERVED FOR DATA STORAGE---  220000
MAX MEMORY LOCATIONS REQUIRED FOR THIS PROB--  208540
```

FIXED SOURCE ADJOINT PROBLEM FOLLOWS
*****THIS IS THE HIGHER ORDER HARMONIC PROBLEM - NOT THE FUNDAMENTAL*****
6 INNERS MIN, 8 INNERS MAX - CHEBYCHEV BETA ON INNERS
SIGMA-1 ORDERING
PROCEDURE=0,1,2,3,4-NORMAL,CHEBYSHEV,SEMEX,DEMEX,SEMEXF. ICVR=0,1-YES,NO INNERS CONVR. OCVR=0,1-YES,NO OUTERS CONVR.

ITER	PROC	ICVR	OCVR	FLUX CHANGE	MU-BAR	OTHER-MU	SEM-IND	ACCELERATION	PARAMETERS	K-USED	D.F.-CALC.	D.F.-USED
1	0	0	0	1.40002D 10	0.0	0.0	1.00000	0.0	0.0	1.0148364	1.00000D 00	1.00000D 00
2	0	0	0	3.39992D 07**********		0.0	1.00000	1.00000	0.0	1.0148364	-9.02141D 00	1.00000D 00
3	0	0	1	-4.86414D 06**********		0.0	1.00000	-1.00000	0.0	1.0148364	-2.90677D 00	1.00000D 00

NEW OVERRELAXATION COEFFICIENTS CALCULATED 1.42806 1.35166 1.52277 1.34990
NEW INNERS CALCULATED 7 6 8 6

4	0	0	1	6.88573D 11**********		0.0	1.00000	-1.00000	-1.00000	1.0148364	-1.16350D 00	1.00000D 00
5	0	0	1	1.87820D 08**********		0.0	1.00000	-1.00000	-1.00000	1.0148364	-3.33978D-01	1.00000D 00
6	0	0	1	1.88499D 09**********		0.0	1.00000	-1.00000	-1.00000	1.0148364	1.46417D-01	1.00000D 00
7	0	0	1	2.63319D 08**********		0.0	1.00000	-1.00000	-1.00000	1.0148364	4.52905D-01	1.00000D 00
8	0	0	1	6.05126D 07**********		0.0	1.00000	-1.00000	-1.00000	1.0148364	6.67488D-01	1.00000D 00
9	0	0	1	2.06071D 06**********		0.0	1.00000	-1.00000	-1.00000	1.0148364	7.52926D-01	1.00000D 00
10	0	0	0	6.94618D 04**********		0.0	1.00000	-1.00000	-1.00000	1.0148364	7.86585D-01	1.00000D 00
11	0	0	1	6.29060D 03 3145.39199		0.0	1.00000	-1.00000	-0.99997	1.0148364	8.11999D-01	1.00000D 00
12	0	0	1	3.06445D 02 151.27141		0.0	1.00000	-1.00000	-1.00034	1.0148364	8.33301D-01	1.00000D 00
13	0	0	1	1.26612D 04 6371.93502		0.0	1.00000	-1.00000	-1.00017	1.0148364	8.51490D-01	1.00000D 00

FORCED EXTRAPOLATION LAMDA 0.83061

2.27128D-17 2.73449D-17 5.00125D-17 0.0 8.30605D-01 4.54142D-01 8.31978D-01 9.90260D-01 9.74025D-03

14	4	0	1	7.43208D 00	0.83061	0.0	1.00000	2.22482	0.0	1.0148364	8.67568D-01	1.00000D 00
15	0	0	0	3.40029D 03	0.0	0.0	1.00000	0.0	0.0	1.0148364	3.23263D-01	1.00000D 00
16	1	0	1	-1.46635D 01	0.0	0.0	1.00000	0.57555	0.0	1.0148364	9.47928D-01	1.00000D 00
17	1	0	0	-3.24860D 01	0.0	0.0	1.00000	1.15453	0.36747	1.0148364	9.22304D-01	1.00000D 00
18	1	1	1	2.32037D 01	10.88758	-10.88758	1.00000	0.93020	0.22510	1.0148364	8.75243D-01	1.00000D 00
19	1	0	0	2.47421D 01	0.85267	13.43738	1.00000	0.88600	0.19704	1.0148364	9.00685D-01	1.00000D 00
20	1	0	0	-4.22753D 00	0.74859	2.28463	1.00000	0.87753	0.19166	1.0148364	9.23142D-01	1.00000D 00
21	1	0	0	2.02572D 01	0.79076	-5.33686	1.00000	0.87592	0.19064	1.0148364	9.38355D-01	1.00000D 00
22	1	0	1	2.18643D 01	0.81291	12.01150	1.00000	0.87561	0.19044	1.0148364	9.49746D-01	1.00000D 00
23	0	0	1	4.30021D 01	0.0	0.0	1.00000	-1.00575	3.78317	1.0148364	9.58870D-01	1.00000D 00
24	1	0	0	6.23056D 00	0.0	0.0	1.00000	0.41834	0.0	1.0148364	9.86205D-01	1.00000D 00
25	1	0	0	-1.37522D 00	0.0	0.0	1.00000	0.55148	0.09387	1.0148364	9.81869D-01	1.00000D 00
26	1	0	0	6.01686D 00	1.36678	1.36678	1.00000	0.55148	0.09387	1.0148364	9.80526D-01	1.00000D 00
27	1	0	1	2.39259D 03	0.93124*********		1.00000	0.55148	0.09387	1.0148364	9.82610D-01	1.00000D 00
28	1	1	1	1.47395D 01	0.87958	7.37591	1.00000	0.55148	0.09387	1.0148364	9.84776D-01	1.00000D 00
29	1	1	0	-6.36573D-01	0.87395	0.36147	1.00000	0.55148	0.09387	1.0148364	9.86703D-01	1.00000D 00
30	3	1	0	-2.64772D 00	1.75592	2.83548	0.0	12.07537	0.00660	1.0148364	9.88389D-01	1.00000D 00
31	0	0	1	2.85276D 01	0.0	0.0	1.00000	0.78445	16.28600	1.0148364	9.23641D-01	1.00000D 00
32	1	0	0	-1.21100D-01	0.0	0.0	1.00000	0.41834	0.0	1.0148364	9.99744D-01	1.00000D 00
33	1	0	0	-1.52196D-01	0.0	0.0	1.00000	0.55148	0.09387	1.0148364	9.99646D-01	1.00000D 00
34	1	0	1	-1.57996D-01	0.95911	0.95911	1.00000	0.55148	0.09387	1.0148364	9.99618D-01	1.00000D 00
35	1	0	1	-1.64403D-01	0.92786	0.95835	1.00000	0.55148	0.09387	1.0148364	9.99658D-01	1.00000D 00
36	1	0	1	-1.72862D-01	0.88108	0.96502	1.00000	0.55148	0.09387	1.0148364	9.99700D-01	1.00000D 00
37	1	0	1	-1.83246D-01	0.87530	0.96845	1.00000	0.55148	0.09387	1.0148364	9.99738D-01	1.00000D 00
38	1	0	0	-1.96351D-01	0.87398	0.97334	0.0	0.55148	0.09387	1.0148364	9.99771D-01	1.00000D 00
39	3	0	0	-1.70297D 00	1.80098	7.82164	0.0	14.46283	-0.81044	1.0148364	9.99800D-01	1.00000D 00
40	0	0	0	-3.90647D-04	0.0	0.0	1.00000	-3.77743	-8.49323	1.0148364	9.98605D-01	1.00000D 00
41	1	1	0	-8.36890D-04	0.0	0.0	1.00000	0.52937	0.0	1.0148364	1.00000D 00	1.00000D 00
42	1	0	1	-1.34840D-03	0.0	0.0	1.00000	0.76697	0.15536	1.0148364	1.00000D 00	1.00000D 00
43	1	0	1	-1.57457D-03	1.16694	1.16694	1.00000	0.76697	0.15536	1.0148364	1.00000D 00	1.00000D 00
44	1	0	1	-1.57774D-03	0.93648	1.00122	1.00000	0.76697	0.15536	1.0148364	1.00000D 00	1.00000D 00
45	1	0	0	-1.48390D-03	0.85984	0.93978	1.00000	0.76697	0.15536	1.0148364	1.00000D 00	1.00000D 00
46	1	0	0	-1.33014D-03	0.84032	0.89571	1.00000	0.76697	0.15536	1.0148364	1.00000D 00	1.00000D 00
47	1	0	0	-1.15750D-03	0.84642	0.86963	0.0	0.76697	0.15536	1.0148364	1.00000D 00	1.00000D 00
48	3	0	0	-6.55086D-03	1.59075	5.65622	0.0	14.17843	-0.37917	1.0148364	1.00000D 00	1.00000D 00
49	0	0	0	5.91715D-06	0.0	0.0	1.00000	-15.51203	-41.73514	1.0148364	1.00000D 00	1.00000D 00

```
ESTIMATED ABSOLUTE POINT FLUX RELATIVE ERROR  2.63350D-05

MULTIPLICATION RELIABILITY ESTIMATORS
BY THE SUM OF THE SQUARES OF THE RESIDUES--------------------------   1.0148364
UPPER AND LOWER BOUNDS ESTIMATES BY MAX REL FLUX CHANGE------------   1.0148424   1.0148304
UPPER AND LOWER BOUNDS ESTIMATES OVER ALL SIGNIFICANT POINTS-------   1.0148365   1.0148359

NUMBER OF INNER ITERATIONS, OUTER ITERATION ERROR EIGENVALUE, AND OVERRELAXATION COEFFICIENTS     8  8.16535D-01
  7  6  9  6
  1.42806  1.35166  1.52277  1.34990

CPU AND CLOCK MINUTES REQUIRED FOR THIS EIGENVALUE PROBLEM ARE  3.456  21.563

ADJOINT FLUX ENERGY SPECTRUM BY GROUP, 1 TO MAX, (SUMMED OVER SPACE)
 -2.91334D-20 -2.09706D-20 -1.67877D-20 -1.81473D-20

ADJOINT FLUX SPACE FUNCTION BY ZONE (SUMMED OVER ENERGY)
  8.07653D-19  2.48090D-18 -5.40394D-19 -8.59073D-19  3.05518D-19  7.26543D-19 -6.94217D-19 -6.47027D-19 -4.39970D-21
  4.58667D-20 -1.70022D-19 -1.46595D-19  2.23688D-18  3.15299D-18 -2.53151D-18  8.46453D-19  5.09289D-19 -2.06808D-18
  4.98509D-20 -1.22597D-20 -2.95721D-19 -4.41474D-20 -2.69201D-20  1.56747D-18  4.93621D-19 -2.32844D-21 -2.26605D-20
  3.17848D-18  1.06171D-18  1.19709D-19 -2.03719D-20  1.56807D-18  4.95106D-19  3.30922D-20 -2.26449D-20  1.16813D-18
 -7.75596D-20 -9.43707D-20 -2.70496D-20 -2.25300D-18 -1.76741D-18 -3.74583D-19 -3.28253D-20 -2.25296D-18 -1.76750D-18
 -3.75107D-19 -3.28441D-20 -2.19738D-18 -1.75547D-18 -3.66094D-19 -3.21559D-20  0.0

**********NOTE - A NEW VERSION OF ATFLUX IS BEING WRITTEN

POINT ADJOINT FLUX INTERFACE FILE ATFLUX (VERSION  2) HAS BEEN WRITTEN ON UNIT NUMBER  35

TOTAL CPU MINUTES USED  3.548   TOTAL CLOCK MINUTES USED  23.496   TOTAL I/O USED   3986
```

```
        FUELMANG -- FUEL MANAGEMENT -- POSITIONING AND ACCOUNTING MODULE VERSION Y 1.9   3/24/81 QA LEVEL 0
        ---------------------------------------------------------------------------------------------------

INITL : REFUEL INSTRUCTIONS FROM "REFINS" RECORD IN FILE' "CONTRL"

         TASK OPTION, ITASK                                          0
         DEBUG OPTION, IDBUG                                         1
         ZNATDN FILE UPDATE OPTION, IUPDT                            0
         FNATDN BACKUP FILE OPTION, IBKUP                            0
         CONTINUOUS FUELING FILE OPTION, ICNFUL                      0
         MASBAL FILE DELETE OPTION, IDLTOP                           0
         VOLUME MISMATCH FACTOR, XMXDIF                              1.00000E 02
         INSTRUCTION SETS TO EXECUTE, ISSET                          1    0    0    0
         FRACTION OF WHOLE REACTOR TREATED, RFRAC                    8.33333E-02
         THERMAL POWER OF REACTOR, POWER1                            8.52067E 08
         THERMAL CONVERSION FACTOR, THRML1                           3.33333E-01
         FUEL CONSUMPTION RATE PER UNIT THERMAL ENERGY, CNSMPT       1.30000E-09

        CASE TITLE -        SUPER SAMPLE PROBLEM.


MAXSIZ: THE MAXIMUM VALUES ARE -- MXNFST =  3 MXNZS =  3

        WRITING OLD ZONE ATOM DENSITY BACKUP FILE, FNATDN VERSION  2, ON UNIT 30 FOR BACKUP OF ZNATDN FILE

        MASS BALANCE FILE, MASBAL VERSION  1, HAS BEEN OPENED ON UNIT 31

        DATA FROM REFUEL FILE FOLLOWS (NNZ,NNR,NNO,NQM,NTS,NFFB,MNFF,NFSB,MNFS,NFDB,MNFD,NFDDB,NFMS,NEC)--
              0      19       0       0       0       3      19       1      19       1      19       0       1       0

        DATA FROM NDXSRF FILE FOLLOWS (NON,NSN,NNS,NAN,NZONE,NSZ)--
             49       4      19      49      52       0

        DATA FROM ZNATDN FILE FOLLOWS(TIME,NCY,NTZSZ,NNS,NBLKAD)--
          511.000                 0      52      19       1

INITL :
         REFUEL IO UNIT # IS 14 VERSION   1
         NDXSRF IO UNIT # IS 16 VERSION   1
         ZNATDN IO UNIT # IS 17 VERSION   1
         FNATDN IO UNIT # IS 30 VERSION   2


MAREFUL: MEMORY POINTERS FOR REFUEL. 352 WORDS ALLOCATED.
                  LRF2D   LHFM    LHIM    LFLF    LPLF    LFQ     LNQ     LRF3D   LTSF    LNTRN   LRF4D   LNFN
                    1       1      39      99     118     137     156     175     175     175     175     175
                  LADB    LRF5D   LNSPN   LNDN    LRF6D   LRVF    LNEMO   LRF8D   LNFB    LNFRB   LNSB    LNDB
                  232     289     289     308     327     327     328     329     329     332     335     338
                  LNFD    LNZ
                  341     344

FULGO : WARNING - CONTROL WORDS IN REFUEL INTERFACE FILE SPECIFY "TRANSITION DATA FOR FUEL RECYCLE" IS NOT PRESENT

MAZNDN: MEMORY POINTERS FOR ZNATDN. 988 WORDS ALLOCATED.
                  LZN2D   LADEN
                  1141    1141

        ZONE ATOM DENSITY DATA READ FROM FILE ZNATDN VERSION  1 ON UNIT 17 - TIME= 5.11000E 02 DAYS, CYCLE=    0

BLDHIM: NO NAMES WERE FOUND TO BUILD THE DEFAULT HIM ("NOT ACCOUNTED FOR") NUCLIDE REFERENCE NAME LIST. EITHER ALL LIBRARY
            MATERIALS WERE PRESENT IN THE HFM ("ACCOUNTED FOR") NUCLIDE REFERENCE NAME LIST OR THE LIBRARY MATERIALS NOT PRESENT
```

```
          IN THE HFM LIST WERE NOT CLASSIFIED AS FISSILE, FERTILE, OTHER ACTINIDE OR FISSION PRODUCT.
CHKMSB: WARNING - MAXCY=    0 NOT LESS THAN NCY=    0

FULGO : SUBROUTINE CHEKR BEGINNING EXECUTION... VERIFY DATA CONSISTENCY

FULGO : SUBROUTINE CHEKR EXECUTION FINISHED... DATA VERIFICATION COMPLETE

        FUEL MANAGEMENT PRIMARY TASK OPTION - NORMAL FUELING TASKS

        MASS BALANCE FILE,MASBAL VERSION  1, IS BEING ACCESSED ON UNIT 31

        FUEL MANAGEMENT SPECIFICATION SETS (RECORDS 7D AND 8D OF REFUEL) TO EXECUTE ARE    1   0   0   0

CHKCTL:   NFST    NZS   ISZN   NFMO FOR FUEL MANAGEMENT SPECIFICATION ORDERED     1 IN REFUEL ARE
             3      3      0      0

FULGO :  SUMVOL EXECUTING...................

CHKCTL:   NFST    NZS   ISZN   NFMO FOR FUEL MANAGEMENT SPECIFICATION ORDERED     1 IN REFUEL ARE
             3      3      0      0

MOVCTR: NFB NFRB  NSB  NDB  NFD   NZ FOR SPECIFICATION LIST    1 OF CURRENT INSTRUCTION SET ARE
         1    0    0    1    0   21   20   19

MOVCTR: NFB NFRB  NSB  NDB  NFD   NZ FOR SPECIFICATION LIST    2 OF CURRENT INSTRUCTION SET ARE
         2    0    0    1    0   18   17   16

MOVCTR: NFB NFRB  NSB  NDB  NFD   NZ FOR SPECIFICATION LIST    3 OF CURRENT INSTRUCTION SET ARE
         3    0    0    1    0   15   14   13

FULGO :  ISBMSS EXECUTING................

        WRITING OLD ZONE ATOM DENSITY INTERFACE FILE, ZNATDN VERSION  2, ON UNIT 17 - TIME= 5.11000E 02 DAYS, CYCLE=    1

        MASS BALANCE FILE, MASBAL VERSION  2, HAS BEEN CREATED ON UNIT  37
```

```
A FLUX - EIGENVALUE PROBLEM FOLLOWS
      4 INNERS MIN,  4 INNERS MAX - CHEBYCHEV  BETA ON INNERS
    SIGMA-1 ORDERING
PROCEDURE=0,1,2,3,4-NORMAL,CHEBYSHEV,SEMEX,DEMEX,SEMEXF.   ICVR=0,1-YES,NO INNERS CONVR.   OCVR=0,1-YES,NO OUTERS CONVR.
ITER  PROC  ICVR  OCVR   FLUX CHANGE     MU-BAR  OTHER-MU  SEM-IND   ACCELERATION PARAMETERS   SOURCE        K-USED    K-CALC
   1    0     0     0    2.79755D 00    0.0      0.0      1.00000      0.0         0.0       1.88222E 19  1.0148364  0.9493536
   2    0     0     0   -4.87438D-01    0.00626  0.0      1.00000      1.00000     0.0       1.75381E 19  1.0148364  0.9621402
   3    0     0     0   -3.93605D-01    0.66989  0.0      1.00000      2.02932     0.0       1.65821E 19  1.0148364  0.9708774
   4    0     0     0   -3.66891D-01    0.77374  0.0      1.00000      3.42608    -0.00291   1.58238E 19  1.0148364  0.9779423
NEW OVERRELAXATION COEFFICIENTS CALCULATED  1.30035  1.47157  1.32486  1.39667
NEW INNERS CALCULATED   4   4   4   4
   5    0     0     1   -4.21231D-01    0.93749  0.0      1.00000     -6.66611     4.63090   1.52152E 19  1.0148364  0.9841640
   6    0     0     0   -3.60788D-01    0.67612  0.0      1.00000      1.49326     2.88681   1.47260E 19  0.9841640  0.9890769
   7    0     0     0   -3.56708D-01    0.87789  0.0      1.00000      1.83198     1.37252   1.47972E 19  0.9890769  0.9938149
   8    0     0     0   -3.56274D-01    0.89522  0.0      1.00000      9.23710    -0.52194   1.48666E 19  0.9938149  0.9979073
     FORCED EXTRAPOLATION LAMDA          0.86288

  7.09455D 16  8.22197D 16  1.53165D 17  0.0          8.62877D-01  4.63197D-01  8.62880D-01  9.99974D-01  2.57577D-05
   9    4     0     0   -4.79108D-01    0.86288  0.0      1.00000      2.91477     0.0       1.49266E 19  0.9979073  1.0014257
  10    1     0     0   -1.97018D-01    0.0      0.0      1.00000      0.61665     0.0       1.53031E 19  1.0125218
  11    1     0     0    1.92848D-01    0.0      0.0      1.00000      1.31908     0.43450   1.55713E 19  1.0302657
  12    1     0     0    1.37990D-01    0.39858  0.39858  1.00000      1.06535     0.27754   1.53854E 19  1.0179641
  13    1     0     0    1.49558D-01    0.51200  1.15861  1.00000      1.00448     0.23989   1.54234E 19  1.0200479
  14    1     0     0    8.27045D-02    0.36046  0.59434  1.00000      0.99040     0.23119   1.54369E 19  1.0209382
  15    1     0     0    2.52011D-02    0.68078  0.50044  1.00000      0.98718     0.22919   1.54120E 19  1.0201168
  16    1     0     0    1.42697D-02    0.55755  0.67653  1.00000      0.98644     0.22874   1.54052E 19  1.0196616
  17    1     0     0    1.27625D-02    0.67525  0.69424  1.00000      0.98627     0.22863   1.54179E 19  1.0200825
  18    1     0     0   -1.11543D-02    0.41128  0.87957  1.00000      0.98623     0.22861   1.54223E 19  1.0203768
  19    1     0     0   -4.43398D-03    0.65695  0.34648  1.00000      0.98623     0.22860   1.54160E 19  1.0201666
  20    1     0     0    2.77836D-03    0.85496  0.62522  1.00000      0.98622     0.22860   1.54139E 19  1.0200264
  21    1     0     0    1.27401D-03    0.72364  0.54701  1.00000      0.98622     0.22860   1.54171E 19  1.0201351
  22    1     0     0   -7.54171D-04    0.61225  0.62568  1.00000      0.98622     0.22860   1.54183E 19  1.0202104
  23    0     0     0    5.42572D-04    0.0      0.0      1.00000      0.60715     0.98671   1.54166E 19  1.0201542  1.0201484
  24    1     0     0   -5.93183D-05    0.0      0.0      1.00000      0.61665     0.0       1.54165E 19  1.0201484
  25    1     0     0    4.28596D-05    0.0      0.0      1.00000      0.98622     0.22860   1.54165E 19  1.0201483
                                                                                                            1.0201484

ESTIMATED ABSOLUTE POINT FLUX RELATIVE ERROR  2.69704D-04

MULTIPLICATION RELIABILITY ESTIMATORS
NEUTRON BALANCE KEFFECTIVE-----------------------------------------  1.0201483
BY THE SUM OF THE SQUARES OF THE RESIDUES--------------------------  1.0201483
UPPER AND LOWER BOUNDS ESTIMATES BY MAX REL FLUX CHANGE------------  1.0201921   1.0201047
UPPER AND LOWER BOUNDS ESTIMATES OVER ALL SIGNIFICANT POINTS-------  1.0214358   1.0185860

NUMBER OF INNER ITERATIONS, OUTER ITERATION ERROR EIGENVALUE, AND OVERRELAXATION COEFFICIENTS     4  8.62877D-01
  1.30035  1.47157  1.32486  1.39668

CPU AND CLOCK MINUTES REQUIRED FOR THIS EIGENVALUE PROBLEM ARE  1.268   3.517
DOPC FILE CLOSING DATA - UNIT, ARRAYS      24       6       1
DOPC FILE CLOSING DATA - UNIT, ARRAYS      27       6       1

    LEAKAGE  5.70885E 15  TOTAL LOSSES  1.79819E 19  TOTAL PRODUCTIONS  1.83442E 19  REACTOR POWER(WATTS)  2.55620D 09

PRIMITIVE FISSILE CONVERSION RATIO IS  1.34755D 00, ESTIMATE FOR CRITICAL SYSTEM IS  1.40605D 00
FISSILE DESTRUCTION PER UNIT ENERGY (ATOMS/WATT-SEC) IS  2.90743D 10

BOUNDARY NEUTRON LEAKAGE
GROUP    LEFT        RIGHT        TOP        BOTTOM        FRONT        BACK
 1   0.0          0.0          0.0          0.0          2.24594D 14  0.0
 2   0.0          0.0          0.0          0.0          2.70305D 15  0.0
```

XI. RECENT EXTENSIONS

Described here are extensions to some of the modules in the system.

A. VENTURE NEUTRONICS, VERSION III

Numerous changes have been made to the VENTURE neutronics module[2] since the release of Version II. The major extensions are described below.

1. The Uncommon Reactor Core Neutronics Problem

The common reactor core neutronics problems have fundamental neutron space energy spectrum solutions. In a typical problem, one finds the most positive eigenvalue associated with an all-positive flux for the pseudo-steady-state condition (k_{eff}), or one achieves the critical state by selective adjustment of some variable such as the fuel concentration. With sophistication in reactor analysis has come the demand for solutions of other, uncommon neutronics problems. Importance functions are needed for sensitivity and uncertainty analyses, as for ratios of integral reaction rates such as the fuel conversion (breeding) ratio. The dominant higher harmonic solution is needed in stability analysis. Typically the desired neutronics solution must contain negative values to qualify as a higher harmonic or to satisfy a fixed source containing negative values. Both regular and adjoint solutions as well as special integrals of the solutions are of interest to support analysis.

A general procedure has been implemented for removing the fundamental contribution to the iterate estimate of the harmonic source each outer iteration. Instead of a flux correction, source correction based orthogonality properties is done[9] during iteration to avoid cost of processing group dependent data. Given the local fission source associated with meshpoint i and harmonic n, the sum over energy groups g,

$$S_{i,n} = \sum_g \nu\Sigma_{f,g,i}\ \phi_{g,i,n}\ , \tag{1}$$

and the importance,

$$I^*_{i,n} = \sum_g \chi_{g,i}\ \phi^*_{g,i,n}\ , \tag{2}$$

the source correction to remove any fundamental contribution is

$$S_{i,1} = S_{i,1} - S_{i,0} \frac{\sum_i S_{i,1} I^*_{i,0} V_i}{\sum_i S_{i,0} I_{i,0} V_i} \tag{3}$$

where index n = 0 is used for the fundamental, and n = 1 for the harmonic, because

$$\sum_i I^*_{i,n} S_{i,m} V_i = 0, \; n \neq m \; , \tag{4}$$

and for the adjoint,

$$I^*_{i,1} = I^*_{i,1} - I^*_{i,0} \frac{\sum_i I^*_{i,1} S_{i,0} V_i}{\sum_i I_{i,0} S_{i,0} V_i}$$

So for either the regular or adjoint (transposed) harmonic problem, be it eigenvalue or fixed source, a source correction is made at the start of each outer iteration. Usual acceleration procedures with small changes are used to drive the iterate estimate to a solution. Note that since the integral fission source tends to be near zero for the harmonic, a special procedure is necessary to produce accurate eigenvalue estimates. We sum absolute values. For the fixed source sensitivity importance problem, this procedure avoids the difficulty experienced without removal of the fundamental contribution where the contamination is so severe that reliability of the solution is questionable. In principle, any harmonic may be solved by successive removal of the contamination from each of the higher harmonics. Other procedures used for solving simple problems are not attractive for the multi-dimensional problems.

Another efficient procedure has been implemented. Consider that the transport term for an untreated simple coordinate is simply

$$- \frac{\partial^2 \phi_n}{\partial x^2} = D \, B_n^2 \phi_n \; , \tag{6}$$

but for the azimuthal coordinate,

$$- \frac{D}{r^2} \frac{\partial^2 \phi_n}{\partial \theta^2} = D \frac{B_n^2}{r^2} \phi_n \tag{7}$$

For the azimuthal fundamental, $B_0^2 = 0$ and for the first harmonic $B_1^2 = 1$. Thus by including a space dependent loss term of D/r^2, the solution for the azimuthal symmetry (or when so approximated) may be computed using two- dimensional (RZ) geometry rather than treating three-dimensional (θRZ) geometry. This harmonic is of special importance in stability analysis since it is often dominant.

Shown in Fig. 14 is the dependence of the eigenvalue separation $(1/k_1 - 1)$ on the core height of a large gas-cooled high-temperature thermal reactor core modeled as a bare homogeneous problem.

There are a number of aspects that impact the ability to produce reliable solutions. For example, given eigenvalues ordered $k_0 > k_1 > k_2 > k_3 \ldots$, there tends to be a large separation between k_0 and k_1, but not between k_1 and k_2, making the harmonic more difficult to solve by iteration than the fundamental.

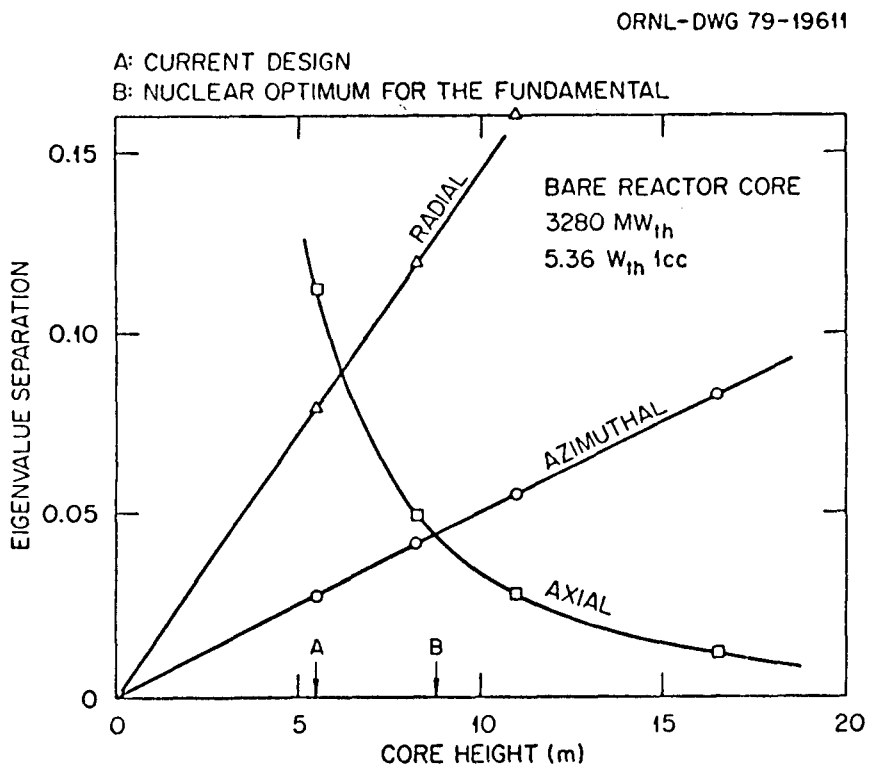

Fig. 14. Eigenvalue Separation for the Dominant Harmonics (Bare Homogeneous Pebble Bed Reactor Model).

2. Space-Energy Rebalance

Space-energy rebalance has been implemented to try to accelerate outer iteration convergence. It is available only for one-dimensional slab (X), cylindrical(R), or spherical(S) geometry; two-dimensional slab (X-Y), or cylindrical(R-Z) geometry; and three-dimensional slab (X-Y-Z) geometry. Problems to be rebalanced must not contain internal black absorber zones or have zone dependent fission spectram. They must be forced to run in the "space stored" mode, since the procedure of calculation was not implemented in the other modes.

If a problem is to be rebalanced in space and energy, the user specifies the number of coarse mesh intervals in each dimension. Then after any asympotic flux extrapolation, the fluxes contained in each rebalance block are multiplied by a rebalance factor for that block.

The block rebalance factors are calculated as

$$F(B,K)_n \quad \frac{\sum_{KK} S(B,K,KK)F(B,KK) + \frac{1}{k_n}\chi(K)X(B)_n + \sum_P L(P,B',K)F(B',K)}{A(B,K) + \sum_P L(P,B,K)} \tag{8}$$

where:

$$X(B)_n = \sum_K Q(B,K)F(B,K),$$

$$Q(B,K) = \sum_{i\in B} \nu\Sigma f(i,K)V(i)\phi(i,K),$$

$$k_n = \frac{k_{n-1} \sum_B X(B)_n}{\sum_B X(B)_{n-1}}$$

$$S(B,K,KK) = \sum_{KK} \sum_{i\in B} \Sigma S(i,KK\to K)V(i)\phi(i,KK),$$

$$A(B,K) = \sum_{i\in B} [\Sigma A+\Sigma R+DB^2](i,K)V(i)\phi(i,K),$$

$$L(P,B,K) = \sum_{i \in B} LCON(i,K)\phi(i,K),$$

$\chi(K)$ = group dependent fission spectrum

B = block index

B' = adjoining block index

K,KK = energy group index

i = mesh point index

P = block boundary mesh points index

$\phi(i,K)$ = flux

n = iteration number.

Equation (8) is iterated until for some input convergence criterion, $\in$,

$$\max \left| \frac{F(B,K)_n - F(B,K)_{n-1}}{F(B,K)_{n-1}} \right| < \in$$

The iteration process is accelerated by overrelaxation

$$F(B,K)_n = F(B,K)_{n-1} + \beta_k \left[F^*(B,K)_n - F(B,K)_{n-1}\right]$$

where β_k = calculated overrelaxation factor for the rebalance process at each group.

The final values of F(B,K) are then adjusted by the linear formulation

$$F(B,K) = 1.0 + \alpha_1\left[F(B,K)-1.0\right]$$

where α_1 is input (defaulted to 1.0, no adjustment).

A linear space interpolation of the final rebalance factors is then done on rows or two-dimensional planes with a second free parameter, for example at meshpoint i,

$$F_i = F_{i-1} + \alpha_2 \left(\frac{\Delta F}{\Delta X}\right),$$

where α_2 is input (defaulted to 1.0) and $\Delta F/\Delta X$ is the derivative obtained by assuming that the calculated block rebalance factors apply at block centers. Note that α_2 may be $< 1.$ while $\alpha_1 > 1.$

Our experience with this procedure has shown that indeed those problems having slow spacial convergence properties may be accelerated, and the rebalance procedure would be especially impressive if we were not using asymptotic extrapolation procedures. Given effective outer iteration extrapolation, rebalancing appears to be of marginal benefit and often not worth its cost, especially on typical problems. Typically, we found a specific procedure (linear interpolation or not, for example) and a specific blocking (arrangement of spacial rebalance zones involving internal meshpoint assignments) to be remarkably effective. But a guide to selecting all of these factors is unknown. When 6 meshpoints per block along one coordinate is much more effective than either 5 or 7, we don't know how to predict this. Typically one needs many blocks and the rebalance cost becomes significant. Incidently these procedures work with one meshpoint per block producing the solution in one iteration, but generally not at a cost competitive with the usual iterative solution procedures.

3. Other Extensions

A number of other extensions are noted briefly here. Generally these were found to be needed in application and they were simple in application and they were simple to implement.

a. The diffusion coefficients are adjusted in all zones up to a specified number by

$$D'_{K,Z} = \alpha_1 + \alpha_2 D_{K,Z}$$

where α_1 and α_2 are input values and $D_{K,Z}$ is the value calculated for group K and zone Z. One may want to know the effect of changing the values or might have correlating data to adjust for heterogeneous effects which tend to increase D.

b. Instead of writing the adjoint flux on the interface data file, an option was implemented to write the space, energy point values of the product of the regular and the adjoint flux, $\phi_o^* \phi_o$ instead of ϕ_o^*. Thus subsequent integrals that usually involve $\phi_o^* \phi_o$ become $\phi_1 \phi_o^* \phi_o$ if ϕ_1 is available, typically a desired harmonic ϕ_1 weighting as for stability. Generally some attention must be paid to the normalization factors to produce absolute values from the integrals.

c. Using the above option, the integral

$$I_1 = \sum_i \frac{\phi_1 \phi_o^* \phi_o E \Delta V}{\gamma + Q\phi_1},$$

where E is the energy per unit flux (not a constant), is done for only the bottom energy group (assumed to be thermal) producing information useful for assessing stability against xenon driven oscillation, where Q is input $[(\sigma/\lambda)\ X10^{-24}$ for Xe^{135} in the thermal range] and γ is 1.0 for reference conditions, 2.0 for half the reference power level and is 0.5 for twice the power level. Also the integral over space and energy is obtained

$$I_2 = \sum_i \phi_o^* \phi_o E \Delta V,$$

where $\phi_o^* \phi_o$ can become $\phi_1 \phi_o^* \phi_o$.

d. The fixed source over space may now be calculated for the power density importance,

$$S_i = \frac{-E_i \Delta V_i}{Pf} + \delta_j \frac{E_j}{d_j}$$

where P is the reactor power level, d_j is the local power density, f is the core fraction treated, and the delta function δ_j means a local value applies at only a selected point.

Several options are implemented for selecting the reference point including location of the peak power density. Note that there are special considerations when the point falls on one or more symmetry boundaries. Subsequent calculations are required to generate the importance function (a fixed source neutronics problem often solved by VENTURE) free from fundamental contamination, and then special space, energy integrals must usually be obtained.

4. Equilibrium Xenon

For some thermal reactor cores, the flux distribution is sensitive to the Xe^{135} distribution. This can make it difficult to obtain an accurate history calculation without using very short exposure periods that may cause the computer cost to be prohibitively high. A gross macroscopic equilibrium xenon calculation has been programmed. Incidentally, the implementation is general so that any other situation satisfying the equations may be treated. Consider the local Xe^{135} concentration to be given by

$$\frac{dN}{dt} = -\left(\lambda x 10^{24} + \int \sigma(E)\phi(E)\right)N + yF = 0,$$

where F is the fission rate, N is the nuclide concentration, σ its cross section. The user must identify the data to be used and supply effective values for the yield fraction y and decay constant λ. The capture loss is included as sink during iterative solution of the non-linear equations.

B. PERTUBAT PERTURBATION ANALYSIS

Delayed neutron behavior calculations have been added to the PERTUBAT perturbation analysis module.[5] These calculations are done if the microscopic group delayed neutron precursor data interface file DLAYXS is available for use by the module. The equations solved are described below.

Definitions

f = delayed neutron family subscript

g,gg = energy group subscripts

i = space point subscript

m = material zone subscript

n = nuclide subscript associated with delayed neutrons

$A_{g,f}$ = fraction of delayed neutrons emitted into group g from precursor family f

B_f = delayed neutron precursor decay constant for family f

$C_{n,m}$ = nuclide concentration

$D_{gg,f,n}$ = number of delayed neutron precursors produced in family f per fission in group gg and nuclide n

$\sigma_{n,gg}$ = microscopic fission cross section

$\phi_{i,gg}$ = regular flux

$\overset{*}{\phi}_{i,g}$ = adjoint flux

$\nu\Sigma_{m,gg}$ = macroscopic production cross section

$X_{m,g}$ = fission spectrum

V_i = element volume

$$S_{m,gg,g} = \sum_{i \in m}{}' \phi_{i,gg} \overset{*}{\phi}_{i,g} V_i$$

$$T = \sum_{i \in m} V_i \sum_{g} X_{m,g}\phi_{i,g} \sum_{gg} \nu\Sigma_{m,gg}\phi_{i,gg}^{-1}$$

$$U_{n,f,g} = \sum_{gg} D_{gg,f,n} \sum_{m} \sigma_{n,gg} C_{n,m} S_{m,gg,g}$$

$$W_{n,f} = T \sum_{g} A_{g,f} U_{n,f,g}$$

<u>Reported for Output</u>

1. Delayed neutron contribtuion

   by nuclide - $\beta_n \doteq \sum_{f} W_{n,f}$

   by family - $\beta_f = \sum_{n} W_{n,f}$

   total - $\beta_{eff} = \sum_{n} \sum_{f} W_{n,f}$

2. Distribution by group

$$X_g = \frac{T}{\beta_{eff}} \sum_n \sum_f A_{g,f} U_{n,f,g}$$

3. Delayed neutron source after clean shutdown

$$Y_{f,t} = \beta_f \, e^{-\beta_f t}$$

4. Delayed neutron source

$$Z_{f,t} = Y_{f,t} \frac{\alpha + \beta_f e^{(\alpha+\beta_f)t}}{\alpha + \beta_f t}$$

where for 3. and 4.,

t = 0.0, 0.001, 0.01, 0.1, 1.0, 10.0, and 100.0

and where for 4.

α = XX(7) and XX(8) from the PERINS record of the file CONTRL. If not specified, α values are -0.05 and +0.05.

C. TEMPERATURE CORRELATION

The VENTURE neutronics module,[2] the REACTION RATE module,[2] and the EXPOSURE module[3] have been extended so that a temperature correlation of the microscopic cross sections may be applied. An inconvenience to the user is that each module must be informed to apply the correlation and no proof testing is done to see that the instructions are consistent. The equation is applied to all microscopic cross sections,

$$\sigma(T) = \sigma(T_1) + \frac{\tan^{-1}\left[\frac{\alpha(T-T_1)}{T_2-T_1}\right]}{\tan^{-1}(\alpha)} \left[\sigma(T_2) - \sigma(T_1)\right]$$

where α and the reference temperatures T_1 and T_2 must be specified.

D. SPECIAL MODULES

A special module has been added recently to the system to perform such tasks as expanding a flux file or combine two to increase the number of geometric dimensions. This new capability is discussed in Section 8.

REFERENCES

1. D. R. Vondy, T. B. Fowler, G. W. Cunningham, and L. M. Petrie, "A Computation System for Nuclear Reactor Core Analysis," ORNL-5158 (April 1977).

2. D. R. Vondy, T. B. Fowler, and G. W. Cunningham, "VENTURE: A Code Block for Solving Multigroup Neutronics Problems Applying the Finite-Difference Diffusion-Theory Approximation to Neutron Transport--VersionII," ORNL-5062/R1 (November 1977).

3. D. R. Vondy and G. W. Cunningham, "Exposure Calculation Code Module: BURNER," ORNL-5180 (February 1979).

4. D. R. Vondy, T. B. Fowler, and G. W. Cunningham, "Input Data Requirements for Special Processors in the Computation System Containing the VENTURE Neutronics Code," ORNL-5229/R1 (July 1979).

5. D. R. Vondy and T. B. Fowler, "The Code PERTUBAT for Processing Neutron Diffusion Theory Neutronics Results for Perturbtaion Analysis," ORNL-5376 (March 1978).

6. D. R. Vondy and T. B. Fowler, "RODMOD-A Code for Control Rod Positioning," ORNL-5466 (November 1978).

7. D. R. Vondy and T. B. Fowler, "Reference Test Problems for the VENTURE Neutronics and Related Computer Codes," ERDA Report ORNL/TM-5887 (August 1977).

8. G. E. Bosler, R. D. O'Dell, and W. M. Resnik, "LASIP-III, A Generalized Processor for Standard Interface Files," LA-6280-MS (April 1976).

9. R. L. Childs, "Generalized Perturbation Theory Using Two-Dimensional Discrete Ordinates Transport Theory," ORNL/CSD/TM-127 (June 1980).

10. VALE, Advanced Triangular Neutronics to be documented.

11. Fuel management to be documented.

12. Thermal hydraulics to be documented.

APPENDIX A

DATA STORAGE REQUIREMENTS FOR THE VENTURE NEUTRONICS AND BURNER CODES

The equations that determine the memory and scratch data file storage requirements for VENTURE neutronics and BURNER depletion problems as dependent on the mode of calculation have been programmed to produce specific information. These programs are being distributed with the code for use at other installations. They are available for use on the ORNL computers. Documentation of local use is shown by requirements in Figures A.1 and A.3 and edit in Figures A.2 and A.4.

For large problems for VENTURE we strongly recommend that the data storage be determined. Usually, for three-dimensional problems the multi-plane stored mode must be used, and usually, enough memory must be allocated to store as many planes of data as the maximum number of inner iterations to minimize data transfer. The requirements depend on the number of inner iterations (which should be determined by the code unless known). See special input processor (DVENTR) section 001. ICX11 = 0, ICX12 = 969 for a special run to determine the number of inners (and also storage); or in the DTNINS record of the CONTRL file, IX(20) = 969, IX(21) = 0.

The authors do believe that documentation for a code should present the information required by users to determine storage requirements. When a code attempts to cover a very broad range of problem type and provides great flexibility in data handling to balance storage and transfer, the equations become extremely involved and not practical to use routinely. Fortran listings of coding used to calculate storage could be included here, but the many lines would waste many pages and serve little utility. We recommend using these codes, using the VENTURE code proper, and relying on past experience.

FIGURE A.1. INPUT FOR VENTURE STORAGE REQUIREMENTS.

JOB CONTROL INSTRUCTIONS

```
//USERID   JOB (CHARG),'USER ADDRESS        ',MSGLEVEL=(1,1)
//*CLASS CPU91=10S,IO=1,REGION=270K,LINES=1,CARDS=0
//STEP EXEC LINKNGO,
// REGION.GO=270K
//LKED.VENTSTOR DD UNIT=3330,VOLUME=SER=ZX1111,DISP=SHR,
// DSNAME=X.TBF14650.VENTSTOR
//LKED.SYSIN DD *
 INCLUDE VENTSTOR
/*
//GO.FT05F001 DD *
/*
//
```

INPUT DESCRIPTION

```
C-----------------------------------------------------------------------C
C       INPUT FORMAT IS N1((18A4)/4(12I6)/N2(I6)). N1 AND N2 ARE        C
C       VARIABLES.                                                      C
C                                                                       C
C        CARD 1 - HOLLERITH TITLE.                                      C
C                                                                       C
C        CARDS 2-5 ARE INTEGERS IN THE STANDARD INTERFACES              C
C                  GEODST, GRUPXS, NDXSRF, AND SEARCH (EXCEPT THE       C
C                  LAST THREE INTEGERS). THE FIRST SEVEN NUMBERS        C
C                  (IGOM THRU NGROUP) ARE NECESSARY TO COMPUTE          C
C                  REQUIREMENTS FOR THE ITERATIVE PROCEDURE. IF THE     C
C                  REST OF THE NUMBERS ARE INPUT ZERO, THE REQUIREMENTS C
C                  FOR THE MACRO., CNSTS., AND INITILAZION PROCEDURES   C
C                  WILL BE INCORRECT.                                   C
C                                                                       C
C            COLUMNS    NAME      INTERFACE                             C
C            -------    ----      ---------                             C
C   CARD 2 - ( 1- 6)    IGOM       (GEODST)                             C
C            ( 7-12)    NZONE      (GEODST)                             C
C            (13-18)    NINTI      (GEODST)                             C
C            (19-24)    NINTJ      (GEODST)                             C
C            (25-30)    NINTK      (GEODST)                             C
C            (31-36)    NZWBB      (GEODST)                             C
C            (37-42)    NGROUP     (GRUPXS)                             C
C            (43-48)    NISO       (GRUPXS)                             C
C            (49-54)    MAXUP      (GRUPXS)                             C
C            (55-60)    MAXDN      (GRUPXS)                             C
C            (61-66)    MAXORD     (GRUPXS)                             C
C            (67-72)    NPSCS      (GRUPXS)                             C
C   CARD 3 - ( 1- 6)    NSTRPD     (GRUPXS)                             C
C            ( 7-12)    NSCMAX     (GRUPXS)                             C
C            (13-18)    NSBLOK     (GRUPXS)                             C
C            (19-24)    NREG       (GEODST)                             C
C            (25-30)    NCINTI     (GEODST)                             C
C            (31-36)    NCINTJ     (GEODST)                             C
C            (37-42)    NCINTK     (GEODST)                             C
C            (43-48)    IMB1       (GEODST)                             C
```

(CONT)

```
C              (49-54)   IMB2       (GEODST)                                C
C              (55-60)   JMB1       (GEODST)                                C
C              (60-66)   JMB2       (GEODST)                                C
C              (67-72)   KMB1       (GEODST)                                C
C    CARD 4 -  ( 1- 6)   KMB2       (GEODST)                                C
C              ( 7-12)   NBS        (GEODST)                                C
C              (13-18)   NBCS       (GEODST)                                C
C              (19-24)   NIBCS      (GEODST)                                C
C              (25-30)   NTRIAG     (GEODST)                                C
C              (31-36)   NRASS      (GEODST)                                C
C              (37-42)   NSN        (NDXSRF)                                C
C              (43-48)   NNS        (NDXSRF)                                C
C              (49-54)   NAN        (NDXSRF)                                C
C              (55-60)   NSZ        (NDXSRF)                                C
C              (61-66)   ISRCH      (SEARCH)                                C
C              (67-72)   NMAXNP     (SEARCH)                                C
C    CARD 5 -  ( 1- 6)   NISOSR     (SEARCH)                                C
C              ( 7-12)   NSETS      (SEARCH)                                C
C              (13-18)   NFS        GT.0 FOR FIXED SOURCE PROBLEMS.         C
C              (19-24)   NP1        GT.0 FOR CONSISTANT P1 PROBLEMS.        C
C              (25-30)   NADJ       GT.0 FOR ADJOINT AND/OR PERTUBATIONS.   C
C              (31-36)   NFRIT      GT.0 FOR WRITING RTFLUX OR ATFLUX.      C
C              (37-42)   NPRIT      GT.0 FOR WRITING PWDINT.                C
C              (43-48)   UNDEFINED.                                         C
C              (49-54)   UNDEFINED.                                         C
C              (55-60)   UNDEFINED.                                         C
C              (61-66)   UNDEFINED.                                         C
C              (67-72)   UNDEFINED.                                         C
C                                                                           C
C    THE NEXT INPUT CARDS GIVE THE DATA ARRAY SIZE (COLUMNS 1-6) FOR        C
C    AS MANY DIFFERENT ARRAY SIZES AS DESIRED, ENDING WITH A BLANK CARD.    C
C    THE CODE THEN LOOPS TO READ A NEW TITLE CARD. A BLANK TITLE CARD       C
C    ENDS THE RUN.                                                          C
C-----------------------------------------------------------------------C
```

SAMPLE INPUT

```
 PROBLEM TITLE = SUPER SAMPLE PROBLEM.
    17    52    50    25     4     1     4    49     0     3     0   343
     0     1     1   123     1     1     4     1     2     1     2     2
     1     0     0     0     1     0     4    19    19     0     0     0
     0     0     0     0     1     1     1     0     0     0     0     0
 50000
100000
     0
COMMENT - A BLANK CARD OR NEW PROBLEM TITLE CARD GOES HERE.
```

Figure A.2. Edit for Sample Calculation-VENTURE Storage Requirements

```
                    MEMORY REQUIREMENTS FOR DATA STORAGE

                                   TOTAL                A         B         C         D
                               MINIMUM   MAXIMUM
STORAGE AVAILABLE                50000
MACRO CALCULATION                 3673
EQUATION CONSTANTS CALCULATION
          CORE CONTAINED OR SPACE STORED   32304     33554
          PLANE STORED                     15829     17079
          ROW STORED                        6019      7269
          MULTI-LEVEL PLANE STORED         17053     18303
INITIAL FLUX
          CORE CONTAINED OR SPACE STORED   14531     18281
          OTHER MODES                       4531      8281
ITERATIVE PROCESS
          CORE CONTAINED                  207214            176202      2171      2290     26551
          SPACE STORED                     69556            66551      2171       834         0
        2 PLANES STORED                    40657            37652      2171       834         0
        1 PLANE STORED                     25581            22576      2171       834         0
       25 ROWS STORED                      19605            16600      2171       834         0
        1 ROW STORED                        3005                0      2171       834         0
        2 MULTI-LEVEL PLANES STORED        48105             7500      2171       834     37600
PERTURBATION CALCULATION                   31250

DATA WILL BE STORED FOR 1 GROUP,    2 PLANES

MEMORY LOCATIONS RESERVED FOR DATA STORAGE---   50000
MAX MEMORY LOCATIONS REQUIRED FOR THIS PROB--   40657
MEMORY LOCATIONS NOT USED-----------------       9343

     SPECIAL SCRATCH DATASET REQUIREMENTS
     MAXIMUM PHYSICAL RECORD IS     7200 WORDS
DIRECT ACCESS FILE 24  REQUIRES    16 RECORDS     2500 WORDS IN LENGTH
DIRECT ACCESS FILE 27  REQUIRES    16 RECORDS     2500 WORDS IN LENGTH
DIRECT ACCESS FILE 28  REQUIRES    16 RECORDS     2500 WORDS IN LENGTH
DIRECT ACCESS FILE 40  REQUIRES    16 RECORDS    10075 WORDS IN LENGTH

DD PARAMETERS FOLLOW FOR  B1 = 3520  AND  B2 =  32000
N2=  51  N3=  10  N4=   1  N5=  23  N6=  10  N7=   2  N8=   2  N9=  13  N10=  13  N11=  16  N12=   1  N13=  13  N14=   1  N15=  10
N16=  51   (NOTE THAT IF THE FLUXES ARE TO BE EXPANDED FROM EXISTING RTFLUX, N10=  51)

REQUIRED DISK STORAGE SPACE FOR FLUX(UNITS 24,27,28) IS     179520 BYTES.
                           FOR CONSTANTS(UNIT 40) IS--      736000 BYTES.
                           FOR CONSTANTS(UNIT 23) IS--       35200 BYTES.
REQUIRED TOTAL DISK STORAGE SPACE IS------------------    7460160 BYTES.

FOR THE ASSIGNED DATA STORAGE, THE REQUIRED REGION SIZE IS APPROXIMATELY  530K BYTES
```

MEMORY REQUIREMENTS FOR DATA STORAGE

	TOTAL MINIMUM	TOTAL MAXIMUM	A	B	C	D
STORAGE AVAILABLE	75000					
MACRO CALCULATION	3673					
EQUATION CONSTANTS CALCULATION						
CORE CONTAINED OR SPACE STORED	32304	33554				
PLANE STORED	15829	17079				
ROW STORED	6019	7269				
MULTI-LEVEL PLANE STORED	17053	18303				
INITIAL FLUX						
CORE CONTAINED OR SPACE STORED	14531	18281				
OTHER MODES	4531	8281				
ITERATIVE PROCESS						
CORE CONTAINED	207214		176202	2171	2290	26551
SPACE STORED	69556		66551	2171	834	0
4 PLANES STORED	70809		67804	2171	834	0
1 PLANE STORED	25581		22576	2171	834	0
25 ROWS STORED	19605		16600	2171	834	0
1 ROW STORED	3005		0	2171	834	0
3 MULTI-LEVEL PLANES STORED	64405		7500	2171	834	53900
PERTURBATION CALCULATION	47725					

DATA WILL BE STORED FOR 1 GROUP, ALL SPACE

MEMORY LOCATIONS RESERVED FOR DATA STORAGE--- 75000
MAX MEMORY LOCATIONS REQUIRED FOR THIS PROB-- 69556
MEMORY LOCATIONS NOT USED---------- 5444

SPECIAL SCRATCH DATASET REQUIREMENTS
MAXIMUM PHYSICAL RECORD IS 7200 WORDS
DIRECT ACCESS FILE 24 REQUIRES 4 RECORDS 10000 WORDS IN LENGTH
DIRECT ACCESS FILE 27 REQUIRES 4 RECORDS 10000 WORDS IN LENGTH
DIRECT ACCESS FILE 28 REQUIRES 4 RECORDS 10000 WORDS IN LENGTH
DIRECT ACCESS FILE 40 REQUIRES 4 RECORDS 26550 WORDS IN LENGTH

DD PARAMETERS FOLLOW FOR B1 = 3520 AND B2 = 32000
N2= 51 N3= 10 N4= 1 N5= 23 N6= 10 N7= 2 N8= 2 N9= 13 N10= 13 N11= 16 N12= 1 N13= 13 N14= 1 N15= 10
N16= 51 (NOTE THAT IF THE FLUXES ARE TO BE EXPANDED FROM EXISTING RTFLUX, N10= 51)

REQUIRED DISK STORAGE SPACE FOR FLUX(UNITS 24,27,28) IS 179520 BYTES.
FOR CONSTANTS(UNIT 40) IS-- 736000 BYTES.
FOR CONSTANTS(UNIT 23) IS-- 35200 BYTES.
REQUIRED TOTAL DISK STORAGE SPACE IS---------- 7460160 BYTES.

FOR THE ASSIGNED DATA STORAGE, THE REQUIRED REGION SIZE IS APPROXIMATELY 630K BYTES

MEMORY REQUIREMENTS FOR DATA STORAGE

	TOTAL MINIMUM	TOTAL MAXIMUM	A	B	C	D
STORAGE AVAILABLE	100000					
MACRO CALCULATION	3673					
EQUATION CONSTANTS CALCULATION						
CORE CONTAINED OR SPACE STORED	32304	33554				
PLANE STORED	15829	17079				
ROW STORED	6019	7269				
MULTI-LEVEL PLANE STORED	17053	18303				
INITIAL FLUX						
CORE CONTAINED OR SPACE STORED	14531	18281				
OTHER MODES	4531	8281				
ITERATIVE PROCESS						
CORE CONTAINED	207214		176202	2171	2290	26551
SPACE STORED	69556		66551	2171	834	0
4 PLANES STORED	70809		67804	2171	834	0
1 PLANE STORED	25581		22576	2171	834	0
25 ROWS STORED	19605		16600	2171	834	0
1 ROW STORED	3005		0	2171	834	0
4 MULTI-LEVEL PLANES STORED	80705		7500	2171	834	70200
PERTURBATION CALCULATION	47725					

DATA WILL BE STORED FOR 1 GROUP, ALL SPACE

MEMORY LOCATIONS RESERVED FOR DATA STORAGE--- 100000
MAX MEMORY LOCATIONS REQUIRED FOR THIS PROB-- 69556
MEMORY LOCATIONS NOT USED---------- 30444

SPECIAL SCRATCH DATASET REQUIREMENTS
MAXIMUM PHYSICAL RECORD IS 7200 WORDS
DIRECT ACCESS FILE 24 REQUIRES 4 RECORDS 10000 WORDS IN LENGTH
DIRECT ACCESS FILE 27 REQUIRES 4 RECORDS 10000 WORDS IN LENGTH
DIRECT ACCESS FILE 28 REQUIRES 4 RECORDS 10000 WORDS IN LENGTH
DIRECT ACCESS FILE 40 REQUIRES 4 RECORDS 26550 WORDS IN LENGTH

DD PARAMETERS FOLLOW FOR B1 = 3520 AND B2 = 32000
N2= 51 N3= 10 N4= 1 N5= 23 N6= 10 N7= 2 N8= 2 N9= 13 N10= 13 N11= 16 N12= 1 N13= 13 N14= 1 N15= 10
N16= 51 (NOTE THAT IF THE FLUXES ARE TO BE EXPANDED FROM EXISTING RTFLUX, N10= 51)

REQUIRED DISK STORAGE SPACE FOR FLUX(UNITS 24,27,28) IS 179520 BYTES.
FOR CONSTANTS(UNIT 40) IS-- 736000 BYTES.
FOR CONSTANTS(UNIT 23) IS-- 35200 BYTES.
REQUIRED TOTAL DISK STORAGE SPACE IS---------- 7460160 BYTES.

FOR THE ASSIGNED DATA STORAGE, THE REQUIRED REGION SIZE IS APPROXIMATELY 730K BYTES

IHC002I STOP 0

FIGURE A.3. INPUT FOR RATER AND BURNER STORAGE REQUIREMENTS.

```
C-----------------------------------------------------------------------
C                                                                      -
C     INPUT REQUIREMENTS                                               -
C                                                                      -
C     CARD 1        (12A6 FORMAT)                                      -
C       COL  (1-72)     TITLE                                          -
C                                                                      -
C     CARD(S) 2+    (NAMELIST PARM)                                    -
C                                                                      -
C     NISO          NO. OF NUCLIDES IN CROSS SECTION FILE              -
C     NGROUP        NO. OF ENERGY GROUPS                               -
C     NZONE         NO. OF ZONES                                       -
C     NSZ           NO. OF SUBZONES                                    -
C     NSN           NO. OF NUCLIDE SETS                                -
C     NNS           MAX. NO. OF NUCLIDES IN ANY SET                    -
C     NREG          NO. OF REGIONS                                     -
C     NISOU         NO. OF UNIQUE NUCLIDES APPEARING IN SYSTEM         -
C     NISOA         NO. OF DIFFERENT ABSOLUTE NUCLIDE NAMES IN SYSTEM  -
C     NUCLAS        NO. OF DIFFERENT NUCLIDE CLASSIFICATIONS           -
C     NZCLAS        NO. OF DIFFERENT ZONE CLASSES                      -
C     IRSUM         NO. OF OPTIONAL PRINCIPAL CROSS SECTIONS IN CROSS  -
C                     SECTION FILE (IALF + INP + IN2N + IND + INT)     -
C     MAXORD        MAX. SCATTERING ORDER                              -
C     NSTRPD        NO. OF COORDINATE DEPENDENT TRANSPORT CROSS        -
C                     SECTIONS IN CROSS SECTION FILE                   -
C     NSCMAX        NO. OF SCATTERING BLOCKS                           -
C     NBS           NO. OF BUCKLING SPECIFICATIONS                     -
C     NBCS          NO. OF EXTERNAL BOUNDARY CONSTANTS                 -
C     NIBCS         NO. OF INTERNAL BOUNDARY CONSTANTS                 -
C     NZWBB         NO. OF ZONES WHICH ARE BLACK ABSORBERS             -
C     NZTO          CROSS SECTION - TEMPERATURE CORRELATION OPTION     -
C                    0 - NOT DONE                                      -
C                    1 - ZONE TEMPERATURES                             -
C                    2 - ZONE AND SUBZONE TEMPERATURES                 -
C     NZT           NO. OF TEMPERATURES PER ZONE(SUBZONE)              -
C     IEDIT         EDIT OPTION                                        -
C                    0 - BASIC                                         -
C                    1 - EXTRA                                         -
C     IGEOM         OPTION ON GEOMETRY INTERFACE                       -
C                    0 - USE GEODST                                    -
C                    1 - USE TRIGOM                                    -
C     NULL01        RESERVED                                           -
C     NISOE         NO. OF NUCLIDES IN EXPOSE FILE                     -
C     NYER          NO. OF ENERGY RANGES FOR YIELD DATA                -
C     NGER          NO. OF ENERGY RANGES FOR GAMMA DATA                -
C     NFSLR         NO. OF FISSILE NUCLIDES WHICH YIELD FISSION PRODUCTS -
C     NFPR          NO. OF FISSION PRODUCTS HAVING YIELD               -
C     NDCYR         NO. OF NUCLIDES WHICH DECAY                        -
C     NEXP9         RESERVED                                           -
C     NEXP10        RESERVED                                           -
C     NEXP11        RESERVED                                           -
```

(CONT)

```
C     NMATXE       NO. OF SOURCE-PRODUCT-PROCESS SPECIFICATIONS FOR     -
C                    MATRIX EXPONENTIAL OR AVERAGE GENERATION RATE      -
C     LSEXCH       NO. OF SUPPLIMENTAL EXPLICIT CHAIN SPECIFICATIONS FOR-
C                    MATRIX EXPONENTIAL OR AVERAGE GENERATION RATE      -
C     LBEXCH       NO. OF BASIC EXPLICIT CHAIN SPECIFICATIONS           -
C     METHOD       SOLUTION METHOD FOR EXPOSURE/SHUTDOWN                -
C                   0 - MATRIX EXPONENTIAL                              -
C                   1 - EXPLICIT CHAIN                                  -
C                   2 - AVERAGE GENERATION RATE                         -
C     IYER         YIELD OPTION                                         -
C                   0 - NORMAL                                          -
C                   1 - IF NYER EQ 1 AND ENERGY RANGE OF YIELD DATA     -
C                        DOES NOT COVER NEUTRON ENERGY RANGE            -
C     LNICTX       MAXIMUM EXPLICIT CHAIN LENGTH (MUST BE EVEN)         -
C     NAODX        NO. OF ADDITIONAL COUPLING TERMS FOR MATRIX METHODS  -
C     NSTEPE       NO. OF EXPOSURE SUBSTEPS                             -
C     NSTEPS       NO. OF SHUTDOWN SUBSTEPS                             -
C     NMODE        EXPOSURE OPTION                                      -
C                   0 - NORMAL                                          -
C                   1 - CONTINUOUS FUELING                              -
C     NRTZ         NO. OF ZONE PATHS                                    -
C     NRTSZ        NO. OF SUBZONE PATHS                                 -
C     IHIST        OPTION TO WRITE EXPOSURE HISTORY INTERFACE           -
C                   0 - NOT DONE                                        -
C                   1 - DONE                                            -
C     NFLU         NO. OF FLUENCE RANGES TO BE SAVED                    -
C     NRRN         NO. OF REACTION RATE TYPE DATA TO BE SAVED           -
C     IZPD         OPTION ON ZONE(SUBZONE) POWER DENSITY                -
C                   0 - NOT NEEDED                                      -
C                   1 - MUST BE CALCULATED                              -
C     ISED         SECONDARY ENERGY DEPOSITION OPTION                   -
C                   0 - NOT DONE                                        -
C                   1 - DONE                                            -
C     IPTC         OPTION FOR POINT CALCULATION                         -
C                   0 - NOT DONE                                        -
C                   1 - METHOD 1 (GEODST AND RTFLUX)                    -
C                   2 - METHOD 2 (RZFLUX-MODIFIED)                      -
C     IPTCDB       POINT CALCULATION DEBUG EDIT                         -
C                   0 - NONE                                            -
C                   1 - EXTENSIVE                                       -
C     NPT          NO. OF POINTS                                        -
C     NZPT         NO. OF ZONES SPECIFIED FOR POINT CALCULATION         -
C     NCINTI       NO. OF COARSE MESH INTERVALS - DIMENSION 1           -
C     NCINTJ       NO. OF COARSE MESH INTERVALS - DIMENSION 2           -
C     NCINTK       NO. OF COARSE MESH INTERVALS - DIMENSION 3           -
C     NINTI        NO. OF FINE MESH INTERVALS - DIMENSION 1             -
C     NINTJ        NO. OF FINE MESH INTERVALS - DIMENSION 2             -
C     NINTK        NO. OF FINE MESH INTERVALS - DIMENSION 3             -
C     IGOM         GEOMETRY OPTION                                      -
C     NTRIAG       TRIAGONAL GEOMETRY OPTION                            -
```

(CONT)

```
C     IBND          BOUNDARY CONDITION OPTION                                -
C     NRASS         REGION ASSIGNMENT OPTION                                 -
C                    0 - COARSE MESH                                         -
C                    1 - FINE MESH                                           -
C     NULL02        RESERVED                                                 -
C     NULL03        RESERVED                                                 -
C     MEMORY        DATA ARRAY SIZE (WORDS)                                  -
C                                                                            -
C       STACKED CASES ARE ALLOWED                                            -
C       TITLE = BLANK TERMINATES RUN                                         -
C                                                                            -
C                        BASIC DEFAULTS                                      -
C                                                                            -
C                        NISOU       DEFAULT = NISO                          -
C                        NISOA       DEFAULT = NISO                          -
C                        NUCLAS      DEFAULT = 8                             -
C                        NZCLAS      DEFAULT = 1                             -
C                        NSCMAX      DEFAULT = 1                             -
C                        NCINTI      DEFAULT = 1                             -
C                        NCINTJ      DEFAULT = 1                             -
C                        NCINTK      DEFAULT = 1                             -
C                        NINTI       DEFAULT = 1                             -
C                        NINTJ       DEFAULT = 1                             -
C                        NINTK       DEFAULT = 1                             -
C                                                                            -
C-----------------------------------------------------------------------------
```

SAMPLE INPUT

```
 SUPER SAMPLE PROBLEM.                                                      TITLE
 &PARM NISO=49,NGROUP=4,NZONE=52,NSZ=0,NSN=4,NNS=19,NREG=123,
 NISOU=49,NISOA=22,NUCLAS=8,NZCLAS=4,IRSUM=1,
 MAXORD=0,NSTRPD=0,NSCMAX=1,NBS=1,NBCS=6,NIBCS=1,NZWBB=1,
 NZTO=0,NZT=0,IEDIT=0,IGEOM=0,
 NISOE=11,NYER=1,NGER=0,NFSLR=6,NFPR=2,NDCYR=1,NMATXE=8,LSEXCH=0,
 LBEXCH=0,METHOD=0,IYER=0,LNICTX=0,NAODX=0,NSTEPE=3,NSTEPS=0,NMODE=0,
 MEMORY=70000   &END
 SUPER SAMPLE PROBLEM.                                                      TITLE
 &PARM MEMORY=25000  &END
 SUPER SAMPLE PROBLEM.                                                      TITLE
 &PARM MEMORY=10000  &END
 SUPER SAMPLE PROBLEM.                                                      TITLE
 &PARM MEMORY=5000   &END
 SUPER SAMPLE PROBLEM.                                                      TITLE
 &PARM MEMORY=3000   &END
                                                                            TITLE
```

A.4. Edit For Sample Calculation-VENTURE Storage Requirements

```
PROBLEM PARAMETERS

CASE TITLE   SUPER SAMPLE PROBLEM.

 NISO  =      49 NGROUP=       4 NZONE =      52 NSZ   =       0 NSN   =       4 NNS   =      19
 NREG  =     123 NISOU =      49 NISOA =      22 NUCLAS=       8 NZCLAS=       4 IRSUM =       1
 MAXORD=       0 NSTRPD=       0 NSCMAX=       1 NBS   =       1 NBCS  =       6 NIBCS =       1
 NZWBB =       1 NZTO  =       0 NZT   =       0 IEDIT =       0 IGEOM =       0 NULL01=       0
 NISOE =      11 NYER  =       1 NGER  =       0 NFSLR =       6 NFPR  =       2 NDCYR =       1
 NEXP9 =       0 NEXP10=       0 NEXP11=       0 NMATKE=       8 LSEXCH=       0 LBEXCH=       0
 METHOD=       0 IYER  =       0 LNICTX=       0 NAODX =       0 NSTEPE=       3 NSTEPS=       0
 NMODE =       0 NRTZ  =       0 NRTSZ =       0 IHIST =       0 NFLU  =       0 NRRN  =       0
 IZPD  =       0 ISED  =       0 IPTC  =       0 IPTCDB=       0 NPT   =       0 NZPT  =       0
 NCINTI=       1 NCINTJ=       1 NCINTK=       1 NINTI =       1 NINTJ =       1 NINTK =       1
 IGOM  =       0 NTRIAG=       0 IBND  =       0 NRASS =       0 NULL02=       0 NULL03=       0


STORAGE REQUIRED FOR REACTION RATE MODULE

        STORAGE SUPPLIED IS    70000
   BASE STORAGE REQUIRED IS     2035
MAXIMUM STORAGE REQUIRED IS    25371
MINIMUM STORAGE REQUIRED IS     4203

LSTART    1594 LXS      2582

 MODZSZ =  0 MODZ   =  0 MODZC  =  0

MEMORY ACTUALLY USED WILL BE   25371


STORAGE REQUIRED FOR DEPLETION MODULE

        STORAGE SUPPLIED IS    70000
   BASE STORAGE REQUIRED IS     2035
MAXIMUM STORAGE REQUIRED IS     8575
MINIMUM STORAGE REQUIRED IS     3730

 MODRR  =  0 MODRRF = -1

MEMORY ACTUALLY USED WILL BE    8575
```

```
PROBLEM PARAMETERS

CASE TITLE   SUPER SAMPLE PROBLEM.

 NISO  =      49 NGROUP=       4 NZONE =      52  NSZ   =       0 NSN   =       4 NNS   =      19
 NREG  =     123 NISOU =      49 NISOA =      22  NUCLAS=       8 NZCLAS=       4 IRSUM =       1
 MAXORD=       0 NSTRPD=       0 NSCMAX=       1  NBS   =       1 NBCS  =       6 NIBCS =       1
 NZWBB =       1 NZTO  =       0 NZT   =       0  IEDIT =       0 IGEOM =       0 NULL01=       0
 NISOE =      11 NYER  =       1 NGER  =       0  NFSLR =       6 NFPR  =       2 NDCYR =       1
 NEXP9 =       0 NEXP10=       0 NEXP11=       0  NMATKE=       8 LSEXCH=       0 LBEXCH=       0
 METHOD=       0 IYER  =       0 LNICTX=       0  NAODX =       0 NSTEPE=       3 NSTEPS=       0
 NMODE =       0 NRTZ  =       0 NRTSZ =       0  IHIST =       0 NFLU  =       0 NRRN  =       0
 IZPD  =       0 ISED  =       0 IPTC  =       0  IPTCDB=       0 NPT   =       0 NZPT  =       0
 NCINTI=       1 NCINTJ=       1 NCINTK=       1  NINTI =       1 NINTJ =       1 NINTK =       1
 IGOM  =       0 NTRIAG=       0 IBND  =       0  NRASS =       0 NULL02=       0 NULL03=       0


STORAGE REQUIRED FOR REACTION RATE MODULE

        STORAGE SUPPLIED IS    25000
   BASE STORAGE REQUIRED IS     2035
MAXIMUM STORAGE REQUIRED IS    25371
MINIMUM STORAGE REQUIRED IS     4203

LSTART    1594 LXS      2582

 MODZSZ =  0 MODZ   =  0 MODZC  =  1

DIRECT ACCESS REQUIREMENTS
UNIT  RECORDS  LENGTH(WORDS)
  27        4          392

MEMORY ACTUALLY USED WILL BE   24195


STORAGE REQUIRED FOR DEPLETION MODULE

        STORAGE SUPPLIED IS    25000
   BASE STORAGE REQUIRED IS     2035
MAXIMUM STORAGE REQUIRED IS     8575
MINIMUM STORAGE REQUIRED IS     3730

 MODRR  =  0 MODRRF = -1

MEMORY ACTUALLY USED WILL BE    8575
```

```
PROBLEM PARAMETERS

CASE TITLE   SUPER SAMPLE PROBLEM.

 NISO  =      49 NGROUP=       4 NZONE =      52  NSZ   =       0 NSN   =       4 NNS   =      19
 NREG  =     123 NISOU =      49 NISOA =      22  NUCLAS=       8 NZCLAS=       4 IRSUM =       1
 MAXORD=       0 NSTRPD=       0 NSCMAX=       1  NBS   =       1 NBCS  =       6 NIBCS =       1
 NZWBB =       1 NZTO  =       0 NZT   =       0  IEDIT =       0 IGEOM =       0 NULL01=       0
 NISOE =      11 NYER  =       1 NGER  =       0  NFSLR =       6 NFPR  =       2 NDCYR =       1
 NEXP9 =       0 NEXP10=       0 NEXP11=       0  NMATXE=       8 LSEXCH=       0 LBEXCH=       0
 METHOD=       0 IYER  =       0 LNICTX=       0  NAODX =       0 NSTEPB=       3 NSTEPS=       0
 NMODE =       0 NRTZ  =       0 NRTSZ =       0  IHIST =       0 NFLU  =       0 NRRN  =       0
 IZPD  =       0 ISED  =       0 IPTC  =       0  IPTCDB=       0 NPT   =       0 NZPT  =       0
 NCINTI=       1 NCINTJ=       1 NCINTK=       1  NINTI =       1 NINTJ =       1 NINTK =       1
 IGOM  =       0 NTRIAG=       0 IBND  =       0  NRASS =       0 NULL02=       0 NULL03=       0


STORAGE REQUIRED FOR REACTION RATE MODULE

        STORAGE SUPPLIED IS    10000
   BASE STORAGE REQUIRED IS     2035
MAXIMUM STORAGE REQUIRED IS    25371
MINIMUM STORAGE REQUIRED IS     4203

LSTART    1594 LXS      2582

 MODZSZ =  1 MODZ   =  1 MODZC  =  0

DIRECT ACCESS REQUIREMENTS
UNIT  RECORDS  LENGTH(WORDS)
  24       52          152
  40       52          392

MEMORY ACTUALLY USED WILL BE    5379


STORAGE REQUIRED FOR DEPLETION MODULE

        STORAGE SUPPLIED IS    10000
   BASE STORAGE REQUIRED IS     2035
MAXIMUM STORAGE REQUIRED IS     8575
MINIMUM STORAGE REQUIRED IS     3730

 MODRR  =  0 MODRRF = -1

MEMORY ACTUALLY USED WILL BE    8575
```

```
PROBLEM PARAMETERS

CASE TITLE   SUPER SAMPLE PROBLEM.

 NISO  =      49 NGROUP=       4 NZONE =      52  NSZ   =       0 NSN   =       4 NNS   =      19
 NREG  =     123 NISOU =      49 NISOA =      22  NUCLAS=       8 NZCLAS=       4 IRSUM =       1
 MAXORD=       0 NSTRPD=       0 NSCMAX=       1  NBS   =       1 NBCS  =       6 NIBCS =       1
 NZWBB =       1 NZTO  =       0 NZT   =       0  IEDIT =       0 IGEOM =       0 NULL01=       0
 NISOE =      11 NYER  =       1 NGER  =       0  NFSLR =       6 NFPR  =       2 NDCYR =       1
 NEXP9 =       0 NEXP10=       0 NEXP11=       0  NMATXE=       8 LSEXCH=       0 LBEXCH=       0
 METHOD=       0 IYER  =       0 LNICTX=       0  NAODX =       0 NSTEPE=       3 NSTEPS=       0
 NMODE =       0 NRTZ  =       0 NRTSZ =       0  IHIST =       0 NFLU  =       0 NBRN  =       0
 IZPD  =       0 ISED  =       0 IPTC  =       0  IPTCDB=       0 NPT   =       0 NZPT  =       0
 NCINTI=       1 NCINTJ=       1 NCINTK=       1  NINTI =       1 NINTJ =       1 NINTK =       1
 IGOM  =       0 NTRIAG=       0 IBND  =       0  NRASS =       0 NULL02=       0 NULL03=       0

STORAGE REQUIRED FOR REACTION RATE MODULE

        STORAGE SUPPLIED IS     5000
   BASE STORAGE REQUIRED IS     2035
MAXIMUM STORAGE REQUIRED IS    25371
MINIMUM STORAGE REQUIRED IS     4203

LSTART    1594 LXS      2582

 MODZSZ =  1 MODZ   =  1 MODZC  =  1

DIRECT ACCESS REQUIREMENTS
UNIT  RECORDS  LENGTH(WORDS)
  24       52          152
  40       52          392
  27        4          392

MEMORY ACTUALLY USED WILL BE    4203


STORAGE REQUIRED FOR DEPLETION MODULE

        STORAGE SUPPLIED IS     5000
   BASE STORAGE REQUIRED IS     2035
MAXIMUM STORAGE REQUIRED IS     8575
MINIMUM STORAGE REQUIRED IS     3730

 MODRR  =  1 MODRRF = -1

DIRECT ACCESS REQUIREMENTS
UNIT  RECORDS  LENGTH(WORDS)
  24       52           95

MEMORY ACTUALLY USED WILL BE    3730
```

```
PROBLEM PARAMETERS

CASE TITLE    SUPER SAMPLE PROBLEM.

 NISO  =      49 NGROUP=       4 NZONE =      52 NSZ   =       0 NSN   =       4 NNS   =      19
 NREG  =     123 NISOU =      49 NISOA =      22 NUCLAS=       8 NZCLAS=       4 IRSUM =       1
 MAXORD=       0 NSTRPD=       0 NSCMAX=       1 NBS   =       1 NBCS  =       6 NIBCS =       1
 NZWBB =       1 NZTO  =       0 NZT   =       0 IEDIT =       0 IGEOM =       0 NULL01=       0
 NISOE =      11 NYER  =       1 NGER  =       0 NFSLR =       6 NFPR  =       2 NDCYR =       1
 NEXP9 =       0 NEXP10=       0 NEXP11=       0 NMATXE=       8 LSEXCH=       0 LBEXCH=       0
 METHOD=       0 IYER  =       0 LNICTX=       0 NAODX =       0 NSTEPE=       3 NSTEPS=       0
 NMODE =       0 NRTZ  =       0 NRTSZ =       0 IHIST =       0 NFLU  =       0 NRRN  =       0
 IZPD  =       0 ISED  =       0 IPTC  =       0 IPTCDB=       0 NPT   =       0 NZPT  =       0
 NCINTI=       1 NCINTJ=       1 NCINTK=       1 NINTI =       1 NINTJ =       1 NINTK =       1
 IGOM  =       0 NTRIAG=       0 IBND  =       0 NRASS =       0 NULL02=       0 NULL03=       0


STORAGE REQUIRED FOR REACTION RATE MODULE

        STORAGE SUPPLIED IS     3000
   BASE STORAGE REQUIRED IS     2035
MAXIMUM STORAGE REQUIRED IS    25371
MINIMUM STORAGE REQUIRED IS     4203

LSTART     1594 LXS      2582

 MODZSZ = -1 MODZ   = -1 MODZC  = -1

CAN NOT SOLVE PROBLEM


STORAGE REQUIRED FOR DEPLETION MODULE

        STORAGE SUPPLIED IS     3000
   BASE STORAGE REQUIRED IS     2035
MAXIMUM STORAGE REQUIRED IS     8575
MINIMUM STORAGE REQUIRED IS     3730

 MODRR  = -1 MODRRF = -1

CAN NOT SOLVE PROBLEM

IHC002I STOP      0
```

APPENDIX B

The attached figure shows the Job Control Language (JCL) that is required to create the BOLD VENTURE computation system on the local IBM computers as a partitioned data set. This data set has the name BOLD.VENTURE.

The subroutines that are required for each module are stored in hexadecimal form as sequential data sets on a 3330 disk (XXXXXX). For example, the data set CONTROL1.HEX.PGM contains the hexadecimal routines for the control module. The four modules SCALE, LPGETMDL, LPREADER, and LPGETPRM comprise the driver for the system.

The recommended overlay structure for each module is documented by Figure B.1.

FIGURE B.1. JCL REQUIRED TO CREATE THE SYSTEM.

```
//STEP EXEC LKED,
// REGION.LKED=270K,
// PARM.LKED='OVLY,LIST,MAP,SIZE=(266K,100K)'
//LKED.SYSLIB DD DSN=SYS1.FORTLIB,DISP=SHR
// DD DSN=SYS1.LOGLIB,DISP=SHR
//LKED.SYSUT1 DD SPACE=(6000,(300,50))

//LKED.SYSLMOD DD UNIT=3330,VOL=SER=XXXXXX,
// DISP=(NEW,KEEP),
// SPACE=(TRK,(500,10,10),RLSE),
// DSNAME=BOLD.VENTURE

//LKED.SCALEHEX DD UNIT=3330,VOL=SER=XXXXXX,DISP=SHR,
// DSNAME=SCALE.HEX.PGM
//LKED.LPGETHEX DD UNIT=3330,VOL=SER=XXXXXX,DISP=SHR,
// DSNAME=LPGETMDL.HEX.PGM
//LKED.LPREAHEX DD UNIT=3330,VOL=SER=XXXXXX,DISP=SHR,
// DSNAME=LPREADER.HEX.PGM
//LKED.LPGPRHEX DD UNIT=3330,VOL=SER=XXXXXX,DISP=SHR,
// DSNAME=LPGETPRM.HEX.PGM
//LKED.CONTRHEX DD UNIT=3330,VOL=SER=XXXXXX,DISP=SHR,
// DSNAME=CONTROL1.HEX.PGM
//LKED.INPROHEX DD UNIT=3330,VOL=SER=XXXXXX,DISP=SHR,
// DSNAME=INPROSER.HEX.PGM
//LKED.INDVEHEX DD UNIT=3330,VOL=SER=XXXXXX,DISP=SHR,
// DSNAME=INDVENTR.HEX.PGM
//LKED.INDCRHEX DD UNIT=3330,VOL=SER=XXXXXX,DISP=SHR,
// DSNAME=INDCRSPR.HEX.PGM
//LKED.INDUTHEX DD UNIT=3330,VOL=SER=XXXXXX,DISP=SHR,
// DSNAME=INDUTLIN.HEX.PGM
//LKED.INDCMHEX DD UNIT=3330,VOL=SER=XXXXXX,DISP=SHR,
// DSNAME=INDCMACR.HEX.PGM
//LKED.FILEDHEX DD UNIT=3330,VOL=SER=XXXXXX,DISP=SHR,
// DSNAME=FILEDTOR.HEX.PGM
//LKED.CROSPHEX DD UNIT=3330,VOL=SER=XXXXXX,DISP=SHR,
// DSNAME=CROSPROS.HEX.PGM
//LKED.VENTNHEX DD UNIT=3330,VOL=SER=XXXXXX,DISP=SHR,
// DSNAME=VENTNEUT.HEX.PGM
//LKED.REACRHEX DD UNIT=3330,VOL=SER=XXXXXX,DISP=SHR,
// DSNAME=REACRATE.HEX.PGM
//LKED.CNTROHEX DD UNIT=3330,VOL=SER=XXXXXX,DISP=SHR,
// DSNAME=CNTRODPO.HEX.PGM
//LKED.EXPOSHEX DD UNIT=3330,VOL=SER=XXXXXX,DISP=SHR,
// DSNAME=EXPOSURE.HEX.PGM
//LKED.PERTUHEX DD UNIT=3330,VOL=SER=XXXXXX,DISP=SHR,
// DSNAME=PERTUBAT.HEX.PGM
//LKED.DMISLHEX DD UNIT=3330,VOL=SER=XXXXXX,DISP=SHR,
// DSNAME=DMISLY.HEX.PGM
//LKED.DENMAHEX DD UNIT=3330,VOL=SER=XXXXXX,DISP=SHR,
// DSNAME=DENMAN.HEX.PGM
//LKED.SYSIN DD *
```

(CONT)

```
INCLUDE SCALEHEX
ENTRY LPCNTROL
NAME SCALE

INCLUDE LPGETHEX
ENTRY LPGETMDL
NAME LPGETMDL

INCLUDE LPREAHEX
ENTRY LPREADER
NAME LPREADER

INCLUDE LPGPRHEX
ENTRY LPGETPRM
NAME LPGETPRM

INCLUDE CONTRHEX
ENTRY GABY
NAME CONTROL1

INCLUDE INPROHEX
OVERLAY INPUT
INSERT CGEODS,CNDXSR,CZNATD
OVERLAY INPUT
INSERT CISOTX
OVERLAY INPUT
INSERT CGRPXS
OVERLAY INPUT
INSERT CISOGX
OVERLAY INPUT
INSERT CFXSRC,CSERCH,CSNCON
OVERLAY INPUT
INSERT CCXSPR,CVENTR,CPRINT,CISOGR
OVERLAY INPUT
INSERT CTFLUX,CCURNT,CAFLUX
OVERLAY INPUT
INSERT CRZFLX,CPERTU,CPWDNT,CFISOR
OVERLAY INPUT
INSERT CDLYXS,CBRKXS,CWORTH,CANSIN,CDACIN
OVERLAY INPUT
INSERT CEXPOS,CZCONC,CRODST
OVERLAY INPUT
INSERT CZNTMP,CZNPOW,CEXPOH,CPTATD
OVERLAY INPUT
INSERT CRFUEL,CTRIGM
ENTRY MAIN
NAME INPROSER

INCLUDE INDVEHEX
OVERLAY LEVELD
INSERT GEOM,GOMN
OVERLAY LEVELD
INSERT REGD
OVERLAY LEVELD
```

(CONT)

```
INSERT TRIF,HEXF
OVERLAY LEVELD
INSERT THKD,VOLS,MSHP
OVERLAY LEVELD
INSERT KOMP,KMOT
OVERLAY LEVELD
INSERT OVLY,MOSH,OVLP
OVERLAY LEVELD
INSERT SSET
OVERLAY LEVELD
INSERT GOMA
OVERLAY LEVELD
INSERT DENS
OVERLAY LEVELD
INSERT GDNA
OVERLAY LEVELD
INSERT SETS
OVERLAY LEVELD
INSERT SEAR
OVERLAY LEVELD
INSERT GOM1,GOM2
OVERLAY LEVELD
INSERT ZND1,ZND2
OVERLAY LEVELD
INSERT NDR1,NDR2
OVERLAY LEVELD
INSERT CTL1
ENTRY MAIN
NAME INDVENTR

INCLUDE INDCRHEX
ENTRY MAIN
NAME INDCRSPR

INCLUDE INDUTHEX
ENTRY MAIN
NAME INDUTLIN

INCLUDE INDCMHEX
ENTRY MAIN
NAME INDCMACR

INCLUDE FILEDHEX
OVERLAY PRINT
INSERT PVENTR
OVERLAY PRINT
INSERT PCXSPR,PPERTU,PFISOR
OVERLAY PRINT
INSERT PANSIN,PDACIN,PWORTH,PSNCON,PISOGR
OVERLAY PRINT
INSERT PTFLUX,PCURNT,PAFLUX,PPWDNT,PRZFLX
OVERLAY PRINT
INSERT PNDXSR,PZNATD,PGEODS
OVERLAY PRINT
```

(CONT)

```
INSERT PFXSRC,PSERCH
OVERLAY PRINT
INSERT PISOGX,PDLYXS,PBRKXS
OVERLAY PRINT
INSERT PGRPXS,PISOTX
OVERLAY PRINT
INSERT PPTATD,PEXPOH,PZNPOW,PZNTMP
ENTRY MAIN
NAME FILEDTOR

INCLUDE CROSPHEX
OVERLAY LEVELQ
INSERT ITI1,ITI2
OVERLAY LEVELQ
INSERT CTI1,CTI2,CTI3,CHOL
OVERLAY LEVELQ
INSERT M2I1,M2I2
OVERLAY LEVELQ
INSERT MIX1,MIX2,MIX3,MIX4,MIX5,MIXC
OVERLAY LEVELQ
INSERT IXS1,IXS2
OVERLAY LEVELQ
INSERT XSC1,XSC2,XSC3,XSC4,XSC5
OVERLAY LEVELQ
INSERT GXS1,GXS2
ENTRY MAIN
NAME CROSPROS

INCLUDE VENTNHEX
OVERLAY LEVELD
INSERT IONO,VENT
OVERLAY LEVELD
INSERT GETCOR,FRECOR
OVERLAY LEVELD
INSERT SGX0,SGX1,SGX2,SGX3,SCAL
OVERLAY LEVELD
INSERT CORE,CORI,CORP,GNAM,CORD,CORB,DDSP,DASU,JPRT
INSERT RELA,RBLB
OVERLAY LEVELD
INSERT MAC1,VZT2,MACA,MACB,MAC2,MAC3,MAC5,CHDM,MAC4,MAC6
OVERLAY LEVELD
INSERT CON1,MSH0,NRCF,MSH1,CON2,CON3,CKCT,CON4,CON5,CON7,CON9,BNDY
INSERT MSH3,GEOQ
OVERLAY LEVELD
INSERT ORLX,ORLA,MUCK,ORLB,ORLC,ORLD,ORLE,ORLF,LAXR,LAXP,BATG,LUCK
INSERT ORLR,CON6,RCOV
OVERLAY LEVELD
INSERT PHIA,PHI1,PHI2,PHI3,PHI4,PHI5,PHI6,PBND,PC2D,PC3D,EDBN,SDBN
INSERT PHI7,TOIP,QDBN,RDBN,GRXP,PAN1,PAN2
OVERLAY LEVELD
INSERT ADN1,ADN2,ADN3,DCID,DSDF,DIMS,AJDS,DIM1,DIM2,CMES,CHVL,DIM3
INSERT ZVRV,CRGV,FLRD,FLMH
OVERLAY LEVELD
INSERT COMC,LCAL,FLXR,FXSR,BSQV,AJNT,REV1,PROS,ZIO3,FEFS
```

(CONT)

```
INSERT CORR,IFTD,ONES,TWOS,TRES,HST1,HST2,HST3
OVERLAY LEVELD
INSERT OUTR,BALC,ZINS,CHBF,CHEV,RDAB,XTRP,JUSB,ATED,FFGG,RDUE,RELX
INSERT FSOR,SSOR,PSOR,FLUX,LTRG,BHAV,OELX,NEWB
OVERLAY LEVELE
INSERT MUEX,ETR1,ETR2,SGDA
OVERLAY LEVELE
INSERT DCIN,RRES,WRES,PREC
OVERLAY LEVELE
INSERT FOU1,SOU1,POU1,INR1,LOU1,LEK1
OVERLAY LEVELE
INSERT FOU2,SOU2,POU2,INR2,LOU2,LEK2
OVERLAY LEVELE
INSERT FOU3,SOU3,POU3,INR3,LOU3,LEK3
INSERT RBL1,RBL2,RBL3,RBL4,RBL5
OVERLAY LEVELE
INSERT FOU4,SOU4,POU4,INR4,LOU4,LEK4,QDUE,QELX,SOUX,J1C4
OVERLAY LEVELE
INSERT FOU5,SOU5,POU5,INR5,LOU5,LEK5,J1C5
OVERLAY LEVELE
INSERT FOU6,SOU6,INR6,DELX
OVERLAY LEVELE
INSERT FOUX,SOUY,POUX,INRX,LOUX,LEKX,SOUZ,J1CX
OVERLAY LEVELD
INSERT EDIT,POUT,NBAL,SOBL,FISS,FLXW,BSQS,PNDN,PTVL,PTZF,JINT
INSERT PND1,PND2,PND3,PND4,PND5
OVERLAY LEVELD
INSERT SAV1,SAV2,SAV3,SAV4,SAV5,SAV6,SAV7
OVERLAY LEVELD
INSERT PERO,RTUB,MRPT,QOUT,BBB1,BBB2,EASU
OVERLAY LEVELE
INSERT PERT,TUFY,LIFE,DAFA,MAPS,PMAP
OVERLAY LEVELE
INSERT JERT,JUFY,JIFE,JAFA,JAPS,JMAP,JGET
ENTRY MAIN
NAME VENTNEUT

INCLUDE REACRHEX
ENTRY MAIN
NAME REACRATE

INCLUDE CNTROHEX
OVERLAY ONE
INSERT INTL
OVERLAY ONE
INSERT CRCR
OVERLAY TWO
INSERT GDST,A89D,REDR,GETL,IDIT,CHEK
OVERLAY TWO
INSERT POS1
OVERLAY TWO
INSERT POS2
OVERLAY TWO
INSERT POSH
```

(CONT)

```
OVERLAY TWO
INSERT POS4
OVERLAY THREE
INSERT NOP0
OVERLAY THREE
INSERT NOP1
OVERLAY THREE
INSERT NOP2
OVERLAY TWO
INSERT SAVE,GDSW
ENTRY MAIN
NAME CNTRODPO

INCLUDE EXPOSHEX
OVERLAY LEVELQ
INSERT BINP,GNZC,BRN7,BRN4,BGXS,BZT1,BRNF,BRNW,ZUCZ,ZUCY,ZIGY
INSERT EPFD,BRNX,HQUE,SKNU
OVERLAY LEVELQ
INSERT BZIN,DEEF,CMOV,BRNS,BRN3,BRNZ,BRNT,BZT2,BRNA,BRND,BRRF
INSERT PRRF
OVERLAY LEVELQ
INSERT BURN,BRNY,ZNAW,ZZPD,AUXE,TPNE
OVERLAY LEVELR
INSERT OEXP,POWL,ARRI,ZCRI,PARI,BRNO
OVERLAY LEVELS
INSERT OFIX,BFIX
OVERLAY LEVELS
INSERT OMOV,BMOV
OVERLAY LEVELT
INSERT ZOND,ZZPF,ZONI,POWP
OVERLAY LEVELT
INSERT PONI,PPOE,QNAW,QNAT
OVERLAY LEVELR
INSERT OXPH,CPH1,ECHK,ESET,FLUE
OVERLAY LEVELS
INSERT EXPH,FLUC,REHT,CPH2,EPH2
OVERLAY LEVELS
INSERT QXPH,QPTD,QFLU,QEHT,CPH3,EPH3
OVERLAY LEVELR
INSERT EDEP,EDED,ETAB
OVERLAY LEVELR
INSERT OCWN,DOWN
OVERLAY LEVELQ
INSERT FOUL
OVERLAY LEVELQ
INSERT BPIN,PTNS
OVERLAY LEVELR
INSERT BPIA,PTAT,PGEO,GCHK,MSH0,MSHK,MSH1,MSH3,NRCF,VOLP
INSERT PLOC,PRN3,PEOR,CHEK
OVERLAY LEVELR
INSERT BPIB,ZFMP,ZFM3,ZFMV
OVERLAY LEVELR
INSERT BPIC,PRNS,PRNZ,PRNT,PZT2,PRNA,PRND,BRPF,PRPF
OVERLAY LEVELQ
```

(CONT)

```
INSERT PURN,PRNY,PFIX,POWN,PNAW,PDST
ENTRY MAIN
NAME EXPOSURE

INCLUDE PERTUHEX
OVERLAY LEVELD
INSERT UENT,UONO,UORE,UORI,UNAM,UORD,UORB,UDSP,UASU,UPRT,DLY1,DLY2
OVERLAY LEVELD
INSERT GETCOR,FRECOR
OVERLAY LEVELD
INSERT MCON,NCON
OVERLAY LEVELE
INSERT UAC1,UAC2,UAC3,UAC5,UAC6,UACA,UACB,UCAL,IONS
OVERLAY LEVELE
INSERT UON1,USH0,URCF,USH1,UON2,UON3,UKCT,UON4,UON5,UON7,UON9,BNDY
INSERT USH3,WDFL,WEFL
OVERLAY LEVELE
INSERT URLX,UON6,UJNT,SCAT,OSIG,UEV1
OVERLAY LEVELE
INSERT VAC1,GNEQ,VAC2,VAC3,VACA,VCAL,DKOM,WNEK,DKDN,TEMP,TANS,TENS
INSERT UNEK,KANS,KENS
OVERLAY LEVELD
INSERT PERO,RTUB,MRPT,QOUT,BBB1,BBB2,BEFF
OVERLAY LEVELE
INSERT PERT,TUFY,LIFE,DAFA,MAPS,PMAP
OVERLAY LEVELE
INSERT JERT,JUFY,JIFE,JAFA,JAPS,JMAP,JGET,INLK,KEFF,KEFA
OVERLAY LEVELD
INSERT DKOK,DLK1
ENTRY MAIN
NAME PERTUBAT

INCLUDE DMISLHEX
ENTRY MAIN
NAME DMISLY

INCLUDE DENMAHEX
ENTRY MAIN
NAME DENMAN
/*
//
```

APPENDIX C

Listed here are the interface data files required by the modules of the system. Figure C.1 lists the file CONTRL and Figure C.2 shows the correspondence of data from the DTNINS record of CONTRL and the special input processor DVENTR. The standard files are listed in Figure C.3, and newly defined files are listed in Figure C.4.

Figure C.1. INTERFACE FILE CONTRL

```
C*********************************************************************-
C                        REVISED 04/01/80                             -
C                                                                     -
CF          CONTRL                                                    -
C                                                                     -
CE          BOLD VENTURE SYSTEM CONTROL                               -
C                                                                     -
C*********************************************************************-

C---------------------------------------------------------------------
CS          FILE STRUCTURE                                            -
CS                                                                    -
CS       0V FILE IDENTIFICATION                                       -
CS                                                                    -
CS          RECORD NAME    CODE BLOCK (MODULE)            REQUIREMENT -
CS          -----------  ------------------------------  ----------- -
CS       1D   PROINS     (PROBLEM INFORMATION)            ALWAYS FIRST -
CS       1D   DVRINS     (MODULE DRIVING INFORMATION)     ALWAYS       -
CS       1D   XCPINS     CROSS SECTION PROCESSOR (CIGAR)  AS NEEDED    -
CS       1D   DTNINS     NEUTRONICS (VENTURE)             AS NEEDED    -
CS       1D   RRTINS     REACTION RATE (RATER)            AS NEEDED    -
CS       1D   RODINS     CONTROL ROD POSITIONING (RODMOD) AS NEEDED    -
CS       1D   EXPINS     EXPOSURE (BURNER)                AS NEEDED    -
CS       1D   PERINS     PERTURBATION (PERTUBAT)          AS NEEDED    -
CS       1D   REFINS     FUEL MANAGEMENT                  AS NEEDED    -
CS       1D   PBLINS     THERMAL HYDRAULICS               AS NEEDED    -
CS       1D   BLANK      (CLOSURE)                        ALWAYS LAST  -
CS                                                                    -
C---------------------------------------------------------------------


C---------------------------------------------------------------------
CR          FILE IDENTIFICATION                                       -
C                                                                     -
CL    HNAME,(HUSE(I),I=1,2),IVERS                                     -
C                                                                     -
CW          3*MULT + 1                                                -
C                                                                     -
CD    HNAME          FILE NAME (A6) 'CONTRL'                          -
CD    HUSE(I)        USER IDENTIFICATION (A6)                         -
CD    IVERS          FILE VERSION NUMBER                              -
C                                                                     -
CN    MULT           1 FOR LONG WORD, 2 FOR SHORT WORD MACHINES       -
C                                                                     -
C---------------------------------------------------------------------
```

(CONT)

SPECIFICATIONS FOR PROINS RECORD IN INTERFACE FILE CONTRL

```
C-----------------------------------------------------------------------
CR          PROBLEM INFORMATION                                        -
C                                                                      -
CL    PROINS, (XX(I),I=1,100), (IX(I),I=1,100)                         -
C                                                                      -
CW          101*MULT + 100                                             -
C                                                                      -
CD    PROINS        PROBLEM INFORMATION DATA IDENTIFIER (6HPROINS)     -
C                                                                      -
CD    XX(1-24)      PROBLEM OR CASE TITLE (A6)                         -
C                                                                      -
CD    XX(25)        USER LABEL (JOBNAME) FOR INTERFACE DATA FILES (A6) -
C                                                                      -
CD    XX(26)        USER LABEL (DATE) FOR INTERFACE DATA FILES (A6)    -
C                                                                      -
CD    XX(27-100)    RESERVED                                           -
C                                                                      -
CD    IX(1-100)     RESERVED                                           -
C                                                                      -
C-----------------------------------------------------------------------
```

(CONT)

SPECIFICATIONS FOR DVRINS RECORD IN INTERFACE FILE CONTRL

```
C-----------------------------------------------------------------------
CR          MODULE DRIVING INFORMATION                                -
C                                                                     -
CL    DVRINS, (XX(I),I=1,100), (IX(I),I=1,100)                        -
C                                                                     -
CW          101*MULT + 100                                            -
C                                                                     -
CD    DVRINS        MODULE DRIVING INFORMATION IDENTIFIER (6HDVRINS)  -
C                                                                     -
CD    XX(1-100)     RESERVED                                          -
C                                                                     -
CD    IX(1)         PRIMARY MEMORY ALLOCATION, WORDS                  -
C                                                                     -
CD    IX(2)         RESERVED                                          -
C                                                                     -
CD    IX(3)         RESERVED                                          -
C                                                                     -
CD    IX(4)         MAXIMUM BLOCK SIZE FOR DIRECT ACCESS DATA FILES,  -
CD                      WORDS, BEST VALUE DEPENDS ON SEVERAL THINGS   -
CD                      INCLUDING DISK TRACK LENGTH, OVERRIDE THE     -
CD                      AUTOMATED PROCEDURE ASSIGNMENT IF NON-ZERO    -
C                                                                     -
CD    IX(5)         TOTAL PROCESSOR TIME ALLOWED FOR THE RUN, MINUTES -
C                                                                     -
CD    IX(6-10)      RESERVED                                          -
C                                                                     -
CD    IX(11)        STAND-ALONE FLAG -                                -
CD                      0 - MODULES ARE ACCESSED IN A TRUE MODULAR SENSE-
CD                      1 - MODULES ARE ACCESSED AS IF EACH IS A      -
CD                          STAND-ALONE CODE (NOT RECOMMENDED)        -
C                                                                     -
CD    IX(12-100)    RESERVED                                          -
C                                                                     -
C-----------------------------------------------------------------------
```

(CONT)

SPECIFICATIONS FOR XCPINS RECORD IN INTERFACE FILE CONTRL

```
C-----------------------------------------------------------------------
CR          CROSS SECTION PROCESSOR INSTRUCTIONS                        -
C                                                                       -
CN    THIS DATA REQUIRED BY THE CROSS SECTION PROCESSOR                 -
C                                                                       -
CL    XCPINS, (XX(I),I=1,100), (IX(I),I=1,100)                          -
C                                                                       -
CW          101*MULT + 100                                              -
C                                                                       -
CD    XCPINS        CROSS SECTION PROCESSOR DATA IDENTIFIER (6HXCPINS)  -
C                                                                       -
CD    XX(1-100)     RESERVED                                            -
C                                                                       -
CD    IX(1-2)       RESERVED                                            -
C                                                                       -
CD    IX(3)         OPTION ON INPUT CROSS SECTION FILE PROCESSING       -
CD                      0 - NO PROCESSING REQUIRED                      -
CD                      1 - GENERATE NEW NUCLIDE-ORDERED FILE FROM      -
CD                            THE FILE OR FILES HAVING FORMAT IX(5)     -
CD                            (REQUIRES INTERFACE FILE CXSPRR FOR       -
CD                            ADDITIONAL INFORMATION)                   -
C                                                                       -
CD    IX(4)         OPTION TO GENERATE A GROUP-ORDERED FILE FROM        -
CD                      A NUCLIDE-ORDERED FILE                          -
CD                      0 - NO                                          -
CD                      1 - YES                                         -
C                                                                       -
CD    IX(5)         FORMAT OF INPUT CROSS SECTIONS FOR IX(3) EQ 1       -
CD                      0 - NUCLIDE-ORDERED FILE                        -
CD                      1 - CITATION CROSS SECTION SETS                 -
CD                      2 - MERGE TWO NUCLIDE-ORDERED FILES             -
C                                                                       -
CD    IX(6)         OPTION ON PRINCIPAL CROSS SECTION DATA              -
CD                      FOR IX(4) EQ 1                                  -
CD                      0 - RETAIN ALL DATA                             -
CD                      1 - REDEFINE (N,GAMMA) CROSS SECTION TO BE      -
CD                            THE CAPTURE CROSS SECTION = (N,GAMMA) +   -
CD                            (N,ALPHA) + (N,P) + (N,D) + (N,T) - (N,2N)-
C                                                                       -
CD    IX(7)         OPTION ON SCATTERING DATA FOR IX(4) EQ 1            -
CD                      0 - RETAIN ALL DATA                             -
CD                      1 - RETAIN THE TOTAL SCATTERING ONLY            -
C                                                                       -
CD    IX(8)         OPTION ON SCATTERING ORDER FOR IX(4) EQ 1           -
CD                      0 - RETAIN ALL DATA                             -
CD                      N - RETAIN ORDERS UP TO (N-1) ONLY              -
C                                                                       -
```

(CONT)

```
CD     IX(9)          OPTION ON SCATTERING RECORD BLOCKING FACTOR          -
CD                        FOR IX(4) EQ 1                                   -
CD                        0 - NSBLOK = 1                                   -
CD                        N - NSBLOK = N, IF (NISO/N)*N EQ NISO,           -
CD                              OTHERWISE NSBLOK = NISO                    -
CD                              WHERE NISO IS THE NUMBER OF NUCLIDES       -
C                                                                          -
CD     IX(10)         OPTION TO COMPUTE THE TOTAL SCATTERING MATRIX        -
CD                        FROM THE COMPONENTS FOR IX(4) EQ 1               -
CD                        TOTAL = ELASTIC + INELASTIC + N2N                -
CD                        (THIS MUST BE DONE IF THE GRUPXS FILE IS TO BE   -
CD                         USED BY VENTURE AND THERE IS NO TOTAL           -
CD                         SCATTERING DATA PRESENT)                        -
CD                        0 - NO                                           -
CD                        1 - YES                                          -
CD                        2 - YES AND MULTIPLY N2N SOURCE BY 2.0           -
C                                                                          -
CD     IX(11)         OPTION TO CREATE ISOTOPE MIXTURES AFTER PROCESSING   -
CD                        SPECIFIED BY IX(3) AND IX(5), IF ANY             -
CD                        0 - NO                                           -
CD                        1 - YES (REQUIRES INTERFACE FILE CXSPRR FOR      -
CD                              ADDITIONAL INFORMATION)                    -
C                                                                          -
CD     IX(12-22)      RESERVED                                             -
C                                                                          -
CD     IX(23)         OPTION TO EDIT LATEST NUCLIDE-ORDERED FILE           -
CD                        0 - NO                                           -
CD                        1 - YES                                          -
C                                                                          -
CD     IX(24)         OPTION TO EDIT GROUP-ORDERED FILE                    -
CD                        0 - NO                                           -
CD                        1 - YES                                          -
C                                                                          -
CD     IX(25-100)     RESERVED                                             -
C                                                                          -
C--------------------------------------------------------------------------
```

(CONT)

SPECIFICATIONS FOR DTNINS RECORD IN INTERFACE FILE CONTRL

```
C-----------------------------------------------------------------------
CR          NEUTRONICS INSTRUCTIONS                                    -
C                                                                      -
CL    DTNINS, (XX(I),I=1,100), (IX(I),I=1,100)                         -
C                                                                      -
CW          101*MULT + 100                                             -
C                                                                      -
CD    DTNINS            NEUTRONICS CONTROL IDENTIFIER, A(6)            -
CD    XX(1)             REFERENCE REAL TIME, DAYS                      -
CD    XX(2)             MACHINE TIME ALLOWED FOR SOLUTION, MIN         -
CD                        (ITERATION TERMINATED IF TIME EXCEEDED)      -
CD    XX(3)             CYCLE TIME IN MINUTES TO WRITE RESTART DATA    -
CD                         NOT DONE IF 0, ALWAYS DONE AT END IF NON-ZERO-
C                                                                      -
CN          NOTE THAT VARIABLES NOT DEFINED ARE RESERVED FOR LATER USE -
C                                                                      -
CD    XX(4)             POWER LEVEL OF REACTOR, WATTS THERMAL          -
CD                       IF 0, NORMALIZATION IS TO ONE SOURCE NEUTRON  -
CD                       (WATT-SEC/FISS DEFAULTED TO 3.2E-11 IF ZERO)  -
CD    XX(5)             ENERGY CONVERSION FACTOR, FISSION TO THERMAL   -
CD    XX(6)             FRACTION OF REACTOR TREATED                    -
CD    XX(7)             SPECIFIED MULTIPLICATION FACTOR FOR SEARCH IF  -
CD                        NON-ZERO                                     -
CD    XX(8)             SPECIFIED OVERRELAXATION COEFFICIENT IF NON-ZERO-
CD    XX(9)             ESTIMATE OF THE EIGENVALUE FOR CHEBYCHEV       -
CD                        ACCELERATION ON OUTER ITERATIONS             -
CD    XX(10)            ESTIMATE OF THE LOWER LIMIT OF THE SPECTRUM OF -
CD                        EIGENVALUES FOR CHEBYCHEV ACCELERATION       -
CD    XX(11)            CONVERGENCE CRITERIA ON INTEGRAL QUANTITIES    -
CD                         MAXIMUM RELATIVE CHANGE ON OUTER ITERATION  -
CD    XX(12)            CONVERGENCE CRITERIA ON LOCAL OR POINT VARIABLES-
CD                         MAXIMUM RELATIVE POINT FLUX CHANGE ON OUTER -
CD                         ITERATION (.00005)                          -
CD    XX(13)            CONSTANT BUCKLING VALUE WHICH OVERRIDES THE DATA-
CD                         IN GEODST FILE IF NON-ZERO                  -
CD    XX(14)            RESERVED                                       -
CD    XX(15)            RESERVED                                       -
CD    XX(16)            RESERVED                                       -
CD    XX(17)            RESERVED                                       -
CD    XX(18)            RESERVED                                       -
CD    XX(19)            LIMITING VALUE OF ANY DIFFUSION COEFFICIENT    -
CD                         IF NOT ZERO - DEFAULT 100.0                 -
CD    XX(20)            PARAMETER FOR HIGHER ORDER VALE SOLUTION       -
CD                        1/6 = 0.1666666 - TAYLOR SERIES              -
CD                        7/36 = 0.194444 - LINEAR FLUX                -
CD                        1/4 = 0.25 - LINEAR FINITE ELEMENT           -
CD                      IF MADE NEGATIVE, THE HIGHER ORDER APPROXIMATION-
CD                      IS NOT APPLIED TO THE SOURCE                   -
```

(CONT)

```
CD     XX(21)              THE ZONE AND GROUP DIFFUSION COEFFICIENTS       -
CD                           THROUGH ZONE IX(43) (SEE BELOW) WILL BE       -
CD                           MULTIPLIED BY THIS NUMBER IF NOT ZERO         -
CD     XX(22)              THIS NUMBER WILL BE ADDED TO THE ZONE AND       -
CD                           GROUP DIFFUSION COEFFICIENTS THROUGH ZONE     -
CD                           IX(43) AFTER XX(21) IS APPLIED IF NOT ZERO    -
CD     XX(23)              XENON+IODINE YIELD FRACTON FOR EQUILIBRIUM      -
CD                           XENON - IF IX(69) GT 0                        -
CD     XX(24)              'Q' FACTOR FOR POWER WEIGHTED REGULAR TIMES     -
CD                             ADJOINT FLUX                                -
CD     XX(25)           REFERENCE TEMPERATURE (DEGREES C) OF THE           -
CD                       NEXT-TO-LATEST VERSION 'GRUPXS' CROSS SECTION      -
CD                       INTERFACE FILE                                     -
CD     XX(26)           REFERENCE TEMPERATURE (DEGREES C) OF THE           -
CD                       LATEST VERSION 'GRUPXS' CROSS SECTION INTERFACE    -
CD                       FILE                                               -
CD     XX(27)           CORRELATION PARAMETER FOR THE ARCTANGENT           -
CD                       DEPENDENCE OF CROSS SECTIONS ON ZONE               -
CD                       TEMPERATURES (LINEAR CORRELATION IF 0.0)           -
CD     XX(28)              FACTOR APPLIED TO SPACE INTERPOLATION SLOPE     -
CD                           FOR SPACE-ENERGY REBALANCE. IF ZERO, NO       -
CD                           SPACE INTERPOLATION IS DONE                   -
CD     XX(29)              FACTOR APPLIED TO THE FINAL REBALANCE FACTORS   -
CD                           FOR SPACE-ENERGY REBALANCE - DEFAULT 1.0      -
CD     XX(30)              XENON DECAY CONSTANT FOR EQUILIBRIUM XENON -    -
CD                           IF IX(69) GT 0                                -
CD     XX(31) - XX(100)    RESERVED                                        -
C                                                                          -
CD     IX(1)               INDICATOR THAT THE CODE BLOCK HAS INPUT DATA    -
CD                             NOT CONTAINED IN THE STANDARD INTERFACE FILES-
CD                              OTHER THAN THIS BLOCK OF DATA IF .GT.0     -
CD     IX(2)               RESTART OPTIONS-  RESTART USING DATA FROM AN    -
CD                             OLD CASE IF .GT. 0, REQUIRES SPECIAL RESTART -
CD                             DATA FILE                                   -
CD     IX(3)               REFERENCE COUNT ON PROBLEMS (CYCLE NUMBER)      -
CD     IX(4)               FORMULATION OPTIONS                             -
C                                                                          -
CD                          VENTURE, MESH CENTERED FINITE-DIFFERENCE       -
CD                           1 - DIFFUSION THEORY (FUNDAMENTAL)            -
CD                           2 - SIMPLE P1 APPROXIMATELY (FUNDAMENTAL)     -
CD                          -1 - DIFFUSION THEORY SOLUTION FOR THE DOMINANT-
CD                                ALLOWED FIRST HARMONIC REQUIRING THE     -
CD                                FUNDAMENTAL REGULAR AND ADJOINT FLUX FILES-
CD                                'RTFLUX' AND 'ATFLUX'. THE FIRST ITERATE -
CD                                SOURCE DISTRIBUTION WILL BE SKEWED TO    -
CD                                EXCITE ALL SPACIAL FLUX HARMONICS SO     -
CD                                THAT THE DOMINANT WILL SURFACE.          -
CD                          -2 - SAME AS -1 BUT THE FIRST ITERATE SOURCE   -
CD                                WILL NOT BE SKEWED. USUALLY FOR THIS     -
CD                                OPTION THE 'RTFLUX' FILE MUST EITHER BE A -
CD                                UNIFORM FLUX DISTRIBUTION (IN WHICH CASE -
CD                                THE SOLUTION MAY OR MAY NOT BE FOR THE   -
```

(CONT)

```
CD                                DOMINANT HARMONIC) OR AN INITIAL ESTIMATE -
CD                                OF THE DOMINANT HARMONIC FLUX DISTRIBUTION-
CD                                (FOR EXAMPLE, A COSINE FROM -1 TO +1      -
CD                                ALONG A COORDINATE WHILE PERHAPS UNIFORM  -
CD                                IN OTHER DIRECTIONS) THAT WILL CAUSE THE  -
CD                                DESIRED HARMONIC TO SURFACE. THIS MAY     -
CD                                ESPECIALLY BE USEFUL TO ACCELERATE        -
CD                                CONVERGENCE WHEN TWO OF THE SPACIAL       -
CD                                HARMONIC EIGENVALUES ARE NEARLY EQUAL.    -
CD                            -10 - SPECIAL DOMINANT HARMONIC SOLUTION (RZ) -
CD                                ADJUSTING THE TOTAL LOSS TERM TO ACCOUNT  -
CD                                FOR THE AZIMUTHAL HARMONIC                -
C                                                                           -
CD                             VALE, MESH EDGE TRIANGULAR                   -
CD                              1 - DIFFUSION THEORY (FUNDAMENTAL)          -
CD                             -1 - DIFFUSION THEORY (DOMINANT HARMONIC)    -
CD                             -2 - SAME AS -1 BUT THE FIRST ITERATE SOURCE -
CD                                  WILL NOT BE SKEWED                      -
CD                              3 - HIGHER ORDER (FUNDAMENTAL) - SEE XX(20) -
CD                             -3 - HIGHER ORDER (DOMINATE HARMONIC)        -
CD                             -4 - SAME AS -3 BUT THE FIRST ITERATE SOURCE -
CD                                  WILL NOT BE SKEWED                      -
C                                                                           -
CD                             VANCER, MESH EDGE (2- AND 3-D SLAB INFO SHOWN )-
CD                              1 - FINITE DIFFERENCE                       -
CD                              2 - LINEAR FINITE DIFFERENCE (8,10 NEIGHBORS) -
CD                              3 - EXTENDED TAYLOR SERIES (8, 10 NEIGHBORS) -
CD                              4 - LINEAR FINITE ELEMENT (8, 10 NEIGHBORS) -
CD                              5 - SIMPLE TAYLOR SERIES (8, 10 NEIGHBORS)  -
CD                              6 - USUAL FINITE DIFFERENCE (4, 6 NEIGHBORS) -
CD                              7 - COMPROMISE (8, 10 NEIGHBORS)            -
CD                              8 - COMPROMISE (4, 6 NEIGHBORS)             -
CD                              9 - COMPENSATED DIFFERENCE (4, 6 NEIGHBORS) -
C                                                                           -
CD     IX(5)                  TYPE OF PROBLEM                              -
CD                                0- DETERMINE SOURCE MULTIPLICATION FACTOR -
CD                                1- SEARCH PROBLEM (FILE OF SEARCH DATA IS -
CD                                   REQUIRED, SEE OPTION IX(10))           -
CD                                2- FIXED SOURCE PROBLEM                   -
CD                                3- ADJOINT PROBLEM ONLY                   -
CD                                4- BUCKLING SEARCH                        -
CD                                5- PROMPT MODE ALPHA CALCULATION, 1/V SEARCH-
CD     IX(6)                  ADJOINT PROBLEM OPTIONS                      -
CD                                0 - NO ADJOINT PROBLEM TO BE DONE         -
CD                                1 - EIGENVALUE TYPE PROBLEM               -
CD                                    (NORMALLY FOLLOWING A FORWARD PROBLEM) -
CD                                2 - FIXED SOURCE TYPE PROBLEM             -
CD     IX(7)                  RESERVED                                     -
```

(CONT)

```
CD     IX(8)          OPTION TO FORCE DATA HANDLING MODE (FOR TESTING)-
CD                     -1   OPTION TO TERMINATE IF MEMORY ALLOCATION  -
CD                          IS TOO SMALL FOR EFFICIENT EXECUTION (THE -
CD                          SPACE PROBLEM CANNOT BE STORED IN TWO-    -
CD                          DIMENSIONS OR ENOUGH PLANES OF DATA CAN   -
CD                          NOT BE STORED TO AVOID EXCESS TRANSFER    -
CD                          IN THREE-DIMENSIONS)                      -
CD                       0- AUTOMATED TO MINIMIZE INPUT/OUTPUT        -
CD                       1- BASE PROBLEM CORE CONTAINED               -
CD                       2- SPACE PROBLEM AT EACH ENERGY CONTAINED    -
CD                       3- ONE ROW CONTAINED IN CORE                 -
CD                       4- ONE OR MORE SPACE PLANES CONTAINED IN CORE -
CD                       5- MULTIPLE ROWS STORED FOR TWO DIMENSIONAL  -
CD                       6- MULTI-LEVEL DATA TRANSFER                 -
CD     IX(9)          OPTIONS ON FLUX INITIALIZATION                  -
CD                       -1 SET ALL FLUX VALUES EQUAL                 -
CD                        0 AUTOMATED PROCEDURE                       -
CD                        1 POINT ENERGY MODEL, COSINE IN SPACE       -
CD                        2 USE LATEST VERSION OF AVALIABLE SCALAR    -
CD                          FLUX FILE                                 -
CD                        3 USE NEXT-TO-LATEST VERSION OF AVALIABLE   -
CD                          SCALAR FLUX FILE                          -
CD     IX(10)         IDENTIFIES SEARCH DATA IN SEARCH FILE, IX(5)=1  -
CD     IX(11)         IDENTIFIES SECONDARY SEARCH DATA IN SEARCH FILE -
CD                      TO BE USED IF CONSTRAINTS FOR FIRST SET ARE   -
CD                      NOT SATISFIED, AND SECOND SEARCH IS TO BE DONE-
CD     IX(12)         SPECIFIES THAT A 2-D (OR 1-D) PROBLEM IS TO BE  -
CD                       SOLVED FOR THIS PLANE (OR ROW) OF A 3-D     -
CD                       (OR 2-D) DESCRIPTION IF NON-ZERO            -
CD     IX(13)         ORDER IN THE CROSS SECTION FILE OF THE DIRECTION-
CD                      DEPENDENT TRANSPORT CROSS SECTION TO BE USED  -
CD                      FOR THE FIRST CORRDINATE DIRECTION (USUALLY 0)-
CD     IX(14)         DITTO, SECOND COORDINATE DIRECTION              -
CD     IX(15)         DITTO, THIRD COORDINATE DIRECTION               -
CD     IX(16)         INSTRUCTION NORMALLY EXERCISED BY CONTROL MODULE-
CD                      TO INFORM THE NEUTRONICS MODULE TO RECOVER    -
CD                      DATA FOR INITIALIZATION FROM FILES RZFLUX AND -
CD                      RTFLUX                                        -
CD     IX(17)         FORCE KEFF. CALC. BY SOURCE RATIO IF GT 0       -
CD     IX(18)         FISSION SOURCE DISTRIBUTION FUNCTION OPTION     -
CD                      0- SET VALUES TO BE USED (SAME IN EACH ZONE)  -
CD                      1- REGION DEPENDENT VALUES TO BE USED         -
CD     IX(19)         FISSION SOURCE DISTRIBUTION NORMALIZATION OPTION-
CD                      0- LEAVE UNNORMALIZED                         -
CD                      1- NORMALIZE EACH SET TO SUM TO UNITY         -
CD     IX(20)         CONSTRAINT ON OUTER ITERATIONS(MAX ALLOWED)     -
CD                      (SET BY THE CODE IF NOT SPECIFIED)            -
CD                      IF SET = 969 INITIAL DATA PROCESSING IS DONE  -
CD                      FOR CHECKING INTERFACE DATA FILES, MEMORY     -
CD                      REQUIREMENTS, ETC. AND NO CALCULATIONS        -
CD                      ARE DONE - EXCEPT IF IX(9) IS GREATER         -
CD                      THAN 1, THE RESIDUES PASS IS MADE TO          -
CD                      CALCULATE KEFFECTIVE ONLY                     -
```

(CONT)

```
CD     IX(21)          INNER ITERATION OPTION                          -
CD                       0- USE AUTOMATED PROCEDURE(RECOMENDED)        -
CD                       N- REFERENCE NUMBER OF INNERS = N             -
CD                        SET BY THE CODE IF NOT SPECIFIED             -
CD                          (IF 1 .LE. N .LE. 4, CHEBYSHEV ACCELERATION-
CD                          WILL NOT BE DONE ON OUTER ITERATIONS       -
CD                          AS THE AUTOMATED PROCEDURE)                -
CD     IX(22)          OPTION TO REESTIMATE OVERRELAXATION FACTORS BY  -
CD                      L1 NORM FOR ZERO SOURCE PROBLEM, SPECIAL INNER -
CD                      ITERATIONS ARE DONE (MAKE LARGE TO OVERRIDE    -
CD                     THE AUTOMATED PROCEDURE WHICH EMPLOYS THIS)     -
CD     IX(23)          INITIALIZATION OPTIONS FOR PROCEDURES, CHOICE OF-
CD                       OVERRELAXITION COEFFICIENTS AND ITERATIONS    -
CD                       -2  DONT DO ONE-DIMENSIONAL CALCULATION       -
CD                           FOR INITIALIZATION                        -
CD                       -1 DONT USE 1-D OVERRELAXATION COEFFICIENTS   -
CD                       0- USE AUTOMATED PROCEDURE, SOLVES 1-D PROBLEM-
CD                          CHEBYSHEV COEFFICIENTS ON OUTER ITERATIONS -
CD                          IF THE NUMBER OF INNERS IS .LT. 5          -
CD                          EXCEPT WHEN CHEBYSHEV FLUX ON OUTERS       -
CD                       1- SAME AS 0 BUT DO NOT CHEBYSHEV             -
CD                          OVERRELAXATION COEFFICIENTS                -
CD                       2- FIX THE NUMBER OF INNER ITERATIONS         -
CD                       3- FIX NUMBER OF INNERS, NO CHEBYSHEV         -
CD                       4- FIXED INNERS AND INITIAL COEFFICIENTS      -
CD                       5- FIXED INNERS AND COEFFICIENTS, NO CHEBYSHEV-
CD                       6- SAME AS 4 BUT DONT USE 1-D COEFFICIENTS    -
CD                       7- SAME AS 5 BUT DONT USE 1-D COEFFICIENTS    -
CD     IX(24)          INNERITERATION SWEEP ORDER                      -
CD                       -1 NORMAL ORDERED                             -
CD                        0 AUTOMATED (SIGMA-1 IF AVAILABLE, USUALLY)  -
CD                        1 SIGMA-1 ORDERED IF AVAILABLE               -
CD     IX(25)          OUTER ITERATION CHEBYCHEV ACCELERATION OPTIONS  -
CD                       .LT. 0 START AT THIS ITERATION                -
CD                       0- USE AUTOMATED PROCEDURE                    -
CD                       1- APPLY ONLY AFTER THE FIRST EXTRAPOLATION   -
CD                       2- APPLY CONTINUOUSLY FROM THE START          -
CD                       3- DONT APPLY THE PROCESS                     -
CD                       .GT.100- THE PROCESS IS STARTED AT ITERATION  -
CD                         IX(25)-100 USING AN L1 NORM EIGENVALUE      -
CD     IX(26)          ASYMPTOTIC OUTERITERITION EXTRAPOLATION OPTIONS -
CD                      -1 SINGLE ERROR MODE ONLY                      -
CD                       0- USE AUTOMATED PROCEDURE                    -
CD                       1- SINGLE ERROR MODE USING DATA FOR ALTERNATE -
CD                         ITERATIONS                                  -
CD                       2- NOT ALLOWED                                -
CD                       3- WE ARE TRYING TO FIGURE OUT WHAT THIS DOES -
```

(CONT)

```
CD     IX(27)              FORCED DELAY IN ASYMPTOTIC EXTRAPOLATION        -
CD                            N- NOT ALLOWED FOR THIS MANY OUTER ITERATIONS-
CD                            (IF NEGATIVE, A FORCED PROCEDURE MAY BE      -
CD                            EXECUTED EARLIER)                            -
C                                                                          -
CN         EDITS GENERALLY ARE NOT DONE WHEN FLAG IS ZERO                  -
C                                                                          -
CD     IX(28)              OPTION FOR CONDENSED EDIT (TERMINAL) IF .GT. 1  -
CD     IX(29)              OPTION TO EDIT THE PRINCIPAL MACROSCOPIC        -
CD                           CROSS SECTIONS BY ZONE                        -
CD     IX(30)              OPTION TO EDIT THE MACROSCOPIC SCATTERING       -
CD                           CROSS SECTIONS BY ZONE                        -
CD     IX(31)              OPTIONS ON ITERATION DATA EDITS                 -
CD                           -1- NO EDITS DURING ITERATION                 -
CD                           0, OR 1- PRIMARY OUTER ITERATION DATA ONLY    -
CD                           2- GETS DETAILS EDITED FOR TESTING            -
CD                           3- REQUESTS EXTENDED EDIT FOR DEBUGGING       -
CD     IX(32)              OPTION TO EDIT OVERALL NEUTRON BALANCE BY GROUP -
CD     IX(33)              OPTION TO EDIT NEUTRON BALANCE BY ZONE          -
CD     IX(34)              RESERVED                                        -
CD     IX(35)              OPTION TO EDIT SCALAR NEUTRON FLUX BY POINT     -
CD     IX(36)              RESERVED                                        -
CD     IX(37)              OPTION TO EDIT ZONE-AVERAGE FLUX BY GROUP       -
CD                         IF .GT. 1, ALSO EDIT THE ZONE,GROUP ADJOINT FLUX-
CD     IX(38)              OPTION TO EDIT POWER DENSITY MAP BY INTERVAL    -
CD     IX(39)              OPTION TO EDIT POWER DENSITY TRAVERSES THRU PEAK-
CD     IX(40)              OPTION TO EDIT NEUTRON DENSITY MAP (1/V FLUX    -
CD                            WEIGHTING)                                   -
CD     IX(41)              OPTION TO EDIT NEUTRON DENSITY TRAVERSES        -
CD     IX(42)              OPTION TO EDIT SCALAR ADJOINT FLUX              -
CD     IX(43)              MAXIMUM ZONE NUMBER FOR WHICH XX(21) AND XX(22) -
CD                           ARE TO BE APPLIED TO THE ZONE AND GROUP       -
CD                           DIFFUSION COEFFICIENTS IF NOT ZERO            -
CD     IX(44)              OPTION TO EDIT ATOMIC DENSITIES WHEN SEARCHING  -
CD                            0- NO EDIT                                   -
CD                            1- MINIMUM EDIT AT END                       -
CD                            2- MAXIMUM EDIT DURING CALCULATION           -
CD     IX(45)              PERTURBATION OPTIONS - IF NEGATIVE, FILES RTFLUX-
CD                            AND ATFLUX ARE SUPPLIED AND NO NEUTRONICS    -
CD                            CALCULATION IS DONE - OTHERWISE THE REGULAR  -
CD                            AND/OR ADJOINT SOLUTION IS OBTAINED AS       -
CD                            SPECIFIED ABOVE AND EITHER FLUX FILE NOT     -
CD                            GENERATED MUST BE SUPPLIED                   -
CD                           0- NO PERTURBATION CALCULATION                -
CD                           1- CALCULATE AND EDIT BASIC REGULAR*ADJOINT   -
CD                              FLUX INTEGRALS EXCEPT TRANSPORT            -
CD                           2- ALSO CALCULATE AND EDIT TRANSPORT INTEGRALS-
CD                              (REQUIRED FOR COMPLETE PERTURBATION EFFECT)-
CD                           3- ALSO EDIT MACROSCOPIC ABSORPTION CROSS     -
CD                              SECTION SPACE POINT IMPORTANCE MAP         -
CD                           4- ALSO EDIT MACROSCOPIC PRODUCTION CROSS     -
CD                              SECTION SPACE POINT IMPORTANCE MAP         -
CD                              PLUS ABS-PROD MAP                          -
CD                           5- ALSO EDIT 1/V SPACE POINT IMPORTANCE MAP   -
```

(CONT)

```
CD     IX(46)            EDIT RESULTS FOR A 100 PERCENT CHANGE IN MACRO  -
CD                         CROSS SECTIONS, ONLY IF IX(45).NE.0           -
CD     IX(47)            OPTION TO WRITE POINT FLUX VALUES FOR EXPOSURE  -
CD                        (EXERCISED ONLY IF IX(53) .GT. 0)               -
CD                         .GT. 0  WRITE DATA FOR POINTS IN THIS ZONE     -
CD                         -1 WRITE ONLY THE SPECTRUM FOR THE POINT WHERE-
CD                            THE POWER DENSITY IS A MAXIMUM INITIALLY    -
CD                        -2 WRITE DATA FOR THE POINTS IN THE ZONE WHERE -
CD                            THE POWER DENSITY IS A MAXIMUM INITIALLY    -
CD                         -3 WRITE ONLY THE SPECTRUM FOR THE POINT WHERE-
CD                            THE FIRST GROUP FLUX IS A MAXIMUM INITIALLY-
CD                        -4 WRITE DATA FOR THE POINTS IN THE ZONE WHERE -
CD                            THE FIRST GROUP FLUX IS A MAXIMUM INITIALLY-
C:                         .LT.-4  WRITE SPECTRUM FOR THIS MESH POINT     -
CD     IX(48)            ANOTHER ZONE NUMBER FOR WHICH THE POINT FLUX    -
CD                         VALUES ARE TO BE WRITTEN FOR EXPOSURE IF .GT. -
CD     IX(49)            OPTION TO EDIT THE DIRECT CONTRIBUTION TO CHANGE-
CD                       IN CONVERSION RATIO FROM UNIT CHANGE IN FERTILE -
CD                         CAPTURE AND FISSILE ABSORPTION (MACROSCOPIC)  -
CD     IX(50)            OPTION TO WRITE SCALAR ADJOINT FLUX FILE AS     -
CD                         THE PRODUCT OF THE REGULAR AND ADJOINT FLUX   -
CD                           0- NO                                       -
CD                           1- REWRITE THE LATEST VERSION OF AN OLD FILE-
CD                              (IF THERE IS NONE, WRITE A NEW ONE)      -
CD                           2- WRITE NEW FILE                           -
C                                                                         -
CN          OPTIONS ABOVE ARE TYPICAL FOR EACH FILE COVERED BELOW         -
C                                                                         -
CD     IX(51)            OPTION TO WRITE THE POINT SCALAR FLUX FILE      -
CD     IX(52)            OPTION TO WRITE THE POINT FISSION SOURCE FILE   -
CD     IX(53)            OPTION TO WRITE ZONE-AVERAGE SCALAR FLUX FILE   -
CD     IX(54)            OPTION TO WRITE POINT POWER DENSITY FILE        -
CD     IX(55)            WRITE THE CONVERSION RATIO ADJOINT IMPORTANCE   -
CD                         FIXED SOURCE FILE (ALWAYS ADDS A FILE OR TWO) -
CD                       .GT.0- WRITE COMBINED FILE (HAS NEGATIVE DATA)  -
CD                       .LT.0- WRITE TWO FILES, ALL POSITIVE            -
CD     IX(56)            OPTION TO WRITE THE ZONE POWER DENSITY FILE     -
CD     IX(57)            OPTION TO WRITE THE ADJOINT ZONE AVERAGE FLUX   -
CD                          FILE AZFLUX                                   -
CD     IX(58)            OPTION TO WRITE SCALAR ADJOINT FLUX FILE        -
CD                         APPLICABLE ONLY IF AN ADJOINT PROBLEM WAS DONE-
CD     IX(59)            OPTION TO WRITE PERTURBATION INTEGRALS ON FILE  -
CD                         PERTUB. IX(45) MUST BE NON-ZERO. TRANSPORT    -
CD                         INTEGRALS ARE INCLUDED IF ABS(IX(45)) GT 2.   -
CD     IX(60)            OPTION TO WRITE SPECIAL FORMATTED DATA FILE     -
CD                         (LOGICAL 4) AT THE END OF A CASE - SEE SECTION-
CD                         OF THE VENTURE REPORT                          -
CD     IX(61)            A PLANE NUMBER AT WHICH ZONE AND GROUP BUCKLINGS-
CD                         ARE TO BE CALCULATED                           -
CD     IX(62)            A SECOND PLANE NUMBER FOR THE BUCKLING CALCULATI-
```

(CONT)

```
CD     IX(63)              OPTION TO WRITE A POINTWISE FIXED SOURCE FILE   -
CD                           AS (DB**2) TIMES FLUX                         -
CD     IX(64)              WRITE A POINT POWER DENSITY ADJOINT IMPORTANCE  -
CD                           FIXED SOURCE FILE (ALWAYS ADDS A FILE)        -
CD                              1  POINT WHERE POWER DENSITY IS MAX        -
CD                             -M  POINT IN ZONE ABS(M) WHERE POWER DENSITY -
CD                                 IS MAX                                  -
CD                              2 POINT GIVEN BY IX(65-67) BELOW:          -
CD     IX(65)              COLUME NUMBER FOR IX(64)=2                      -
CD     IX(66)              ROW    NUMBER FOR IX(64)=2                      -
CD     IX(67)              PLANE  NUMBER FOR IX(64)=2                      -
CD     IX(68)              RESERVED                                        -
CD     IX(69)              IF GT 0 EQUILIBRIUM XENON WILL BE ACCOUNTED FOR -
CD                           AND THIS IS THE ORDER NUMBER OF XENON IN THE   -
CD                           NUCLIDE LIST (SET 1) IN SECTION 013 DVENTR     -
CD     IX(70)              FORCE DATA TRANSFER IN INITIALIZATION (TO TEST  -
CD                           PROCEDURES)                                    -
CD     IX(71)              RESERVED                                        -
CD     IX(72)              RESERVED                                        -
CD     IX(73)              OVERRIDE DEFAULT OF FILES TO MEMORY (TO TEST    -
CD                           PROCEDURES)                                    -
CD     IX(74)              SPACE-ENERGY REBALANCE WILL BE DONE OCCASIONALY -
CD                           IF GT 0                                        -
CD     IX(75)              THE NUMBER OF BOLCKS ALONG ROWS (LEFT-RIGHT)    -
CD                           FOR REBALANCE - IX(74) .GT. 0                  -
CD     IX(76)              THE NUMBER OF BOLCKS ALONG COLS (TOP-BOTTOM)    -
CD                           FOR REBALANCE - IX(74) .GT. 0                  -
CD     IX(77)              THE NUMBER OF BOLCKS ALONG PLANES (FORE-AFT)    -
CD                           FOR REBALANCE - IX(74) .GT. 0                  -
CD     IX(78) - IX(79)     RESERVED                                        -
CD     IX(80)           OPTION TO ACCOUNT FOR THE DEPENDENCE OF THE        -
CD                      CROSS SECTIONS ON THE LOCAL TEMPERATURE, REQUIRES  -
CD                      TWO 'GRUPXS' FILES, A 'ZNTEMP' FILE, AND REFERENCE -
CD                      TEMPERATURES (SEE XX(25),XX(26), AND XX(27))       -
CD                      0- NO                                              -
CD                      1- YES                                             -
CD     IX(81) - IX(100)    RESERVED                                        -
C                                                                          -
C-------------------------------------------------------------------------
```

(CONT)

SPECIFICATIONS FOR RRTINS RECORD IN INTERFACE FILE CONTRL

```
C-----------------------------------------------------------------------
CR          REACTION RATE MODULE INSTRUCTIONS                          -
C                                                                      -
C                     REFERENCE 11/01/77 ORNL-5062/R1                  -
C                      MODIFIED 09/17/79                               -
C                                                                      -
CL    RRTINS, (XX(I),I=1,100), (IX(I),I=1,100)                         -
C                                                                      -
CW          101*MULT + 100                                             -
C                                                                      -
CD    RRTINS        REACTION RATE MODULE DATA IDENTIFIER (6HRRTINS)    -
CD                                                                     -
CC    NOTE- UNDEFINED DATA ARE RESERVED FOR FUTURE USE.                -
CC    NOTE- THE VALUE OF ZERO IS A DEFAULT MEANING THAT THE OPTION TO  -
CC          PERFORM THE TASK IS NOT EXERCISED.  CONSIDERABLE DATA      -
CC          HANDLING MAY BE INVOLVED AND MUCH PAPER PRINTED, SO CARE   -
CC          SHOULD BE TAKEN TO OBTAIN ONLY THOSE RESULTS NEEDED.       -
CC    NOTE- QUITE GENERALLY THE FILES -NDXSRF- AND -ZNATDN- ARE NEEDED -
CC          AND USUALLY -GRUPXS-                                       -
C                                                                      -
CD    XX(1)         DESIRED POWER LEVEL IF NON-ZERO (USUALLY NEW)      -
C                                                                      -
CD    XX(2)         RESERVED                                           -
C                                                                      -
CD    XX(3)         WEIGHTING FACTOR DISCUSSED BELOW                   -
C                                                                      -
CD    XX(4)         WEIGHTING FACTOR DISCUSSED BELOW                   -
C                                                                      -
CD    XX(5-24)      RESERVED                                           -
C                                                                      -
CD    XX(25)        REFERENCE TEMPERATURE (DEGREES C) OF THE           -
CD                   NEXT-TO-LATEST VERSION 'GRUPXS' CROSS SECTION     -
CD                   INTERFACE FILE                                    -
C                                                                      -
CD    XX(26)        REFERENCE TEMPERATURE (DEGREES C) OF THE           -
CD                   LATEST VERSION 'GRUPXS' CROSS SECTION INTERFACE   -
CD                   FILE                                              -
C                                                                      -
CD    XX(27)        CORRELATION PARAMETER FOR THE ARCTANGENT           -
CD                   DEPENDENCE OF CROSS SECTIONS ON ZONE              -
CD                   TEMPERATURES (LINEAR CORRELATION IF 0.0)          -
C                                                                      -
CD    XX(28-30)     RESERVED                                           -
C                                                                      -
CD    XX(31-100)    RESERVED - SEE IX(41)                              -
C                                                                      -
CD    IX(1)         RESERVED                                           -
C                                                                      -
CD    IX(2)         CONDENSED EDIT OPTION                              -
CD                   0- YES                                            -
CD                   1- NO                                             -
C                                                                      -
```

(CONT)

```
CD     IX(3)          OPTION TO EDIT PROGRAMMER INFORMATION FOR DEBUGGING -
C                                                                          -
CD     IX(4)          RESERVED                                             -
C                                                                          -
CD     IX(5)          OPTION TO ACCOUNT FOR THE DEPENDENCE OF THE          -
CD                     CROSS SECTIONS ON THE LOCAL TEMPERATURE, REQUIRES  -
CD                     TWO 'GRUPXS' FILES, A 'ZNTEMP' FILE, AND REFERENCE -
CD                     TEMPERATURES (SEE XX(25),XX(26), AND XX(27))       -
CD                     0- NO                                              -
CD                     1- YES                                             -
C                                                                          -
CD     IX(6)          OPTION TO COMPUTE AND EDIT REACTION RATES,           -
CD                        INVENTORIES, AND POWER PRODUCTION                -
CC     NOTE- INDEPENDENT OF THE OPTIONS WHICH FOLLOW, SUMMARY TABLES       -
CC           ARE ALWAYS EDITED ON THIS OPTION                              -
C                                                                          -
CD     IX(7)          RESERVED                                             -
C                                                                          -
CD     IX(8)          RESERVED                                             -
C                                                                          -
CD     IX(9)          OPTION TO EDIT BY ZONE AND SUBZONE FOR EACH UNIQUE  -
CD                        NUCLIDE NAME                                     -
CD                        1 - YES (WILL BE DONE ONLY IF THERE ARE          -
CD                                 SUBZONES)                               -
CC     NOTE- IN THIS EDIT, ZONE RESULTS EXCLUDE SUBZONE CONTRIBUTIONS      -
C                                                                          -
CD     IX(10)         OPTION TO EDIT BY ZONE FOR EACH UNIQUE NUCLIDE NAME -
CD                        NOTE - ZONES WILL INCLUDE SUBZONE CONTRIBUTIONS -
C                                                                          -
CD     IX(11)         OPTION TO EDIT BY ZONE CLASS FOR EACH UNIQUE         -
CD                        NUCLIDE NAME                                     -
C                                                                          -
CD     IX(12)         RESERVED                                             -
C                                                                          -
CD     IX(13)         RESERVED                                             -
C                                                                          -
CD     IX(14)         OPTION TO WEIGHT SUMMARY REACTION RATES BY NUCLIDE  -
CD                        ENERGY GENERATION                                -
CD                        1- FISSION ENERGY ONLY                           -
CD                        2- FISSION PLUS CAPTURE ENERGY                   -
C                                                                          -
CD     IX(15)         OPTION FOR ADDITIONAL RESULTS WITH ALTERNATIVE       -
CD                        WEIGHTINGS (SUMMARY TABLES ONLY)                 -
CD                        1- BY NET NEUTRON PRODUCTION (GENERATION MINUS  -
CD                           ABSORPTION)                                   -
CD                        2- BY CAPTURE RATE IF FERTILE AND ABSORPTION    -
CD                           RATE IF FISSILE                               -
C                                                                          -
CD     IX(16)         REPEAT THE CALCULATIONS OF REACTION RATES INDICATED -
CD                        ABOVE (IX(5).GT.0) USING FLUX, ADJOINT WEIGHTING-
CD                        REQUIRING FILE -PERTUB-                          -
C                                                                          -
```

(CONT)

```
CN          THE FOLLOWING ARE PRELIMINARY, NOT IMPLEMENTED                -
C                                                                         -
CD    IX(17-20)      RESERVED                                             -
C                                                                         -
CD    IX(21)         OPTION TO EDIT REACTION RATE MAPS USING FILE -RTFLUX-
CD                       .GT.0- SPECIFIES A PLANE OF A 3-D PROBLEM OR     -
CD                              A ROW OF A 2-D PROBLEM                    -
CD                       -1-    THE PLANE OR ROW IS TO CONTAIN THE        -
CD                              LOCATION OF MAXIMUM POWER DENSITY         -
C                                                                         -
CD    IX(22)         MAP PRINCIPAL REACTION RATES FOR FISSILE NUCLIDES    -
CD                       1- ABSORPTION                                    -
CD                       2- ABSORPTION AND PRODUCTION                     -
CD                       3- CAPTURE AND FISSION                           -
CD                       4- CAPTURE, FISSION AND PRODUCTION PER           -
CD                          ABSORPTION                                    -
C                                                                         -
CD    IX(23)         MAP PRINCIPAL REACTION RATES FOR FERTILE NUCLIDES    -
CD                       1- CAPTURE                                       -
CD                       2- ABSORPTION ONLY                               -
C                                                                         -
CD    IX(24)         MAP ABSORPTION RATES FOR NUCLIDES OF THIS CLASS      -
C                                                                         -
CD    IX(25)         RESERVED                                             -
C                                                                         -
CD    IX(26)         REPEAT THE MAPPING WITH WEIGHTING ON ADJOINT FLUX    -
CD                       USING FILE -PERTUB                               -
C                                                                         -
CD    IX(27-30)      RESERVED                                             -
C                                                                         -
CD    IX(31)         OPTION TO EDIT REACTIVITY COEFFICIENTS FOR UNIT      -
CD                       CHANGES IN FISSILE NUCLIDE CONCENTRATIONS        -
C                                                                         -
CD    IX(32)         OPTION TO EDIT REACTIVITY COEFFICIENTS FOR UNIT      -
CD                       CHANGES IN FERTILE NUCLIDE CONCENTRATIONS        -
C                                                                         -
CD    IX(33)         OPTION TO EDIT REACTIVITY COEFFICIENTS FOR UNIT      -
CD                       CHANGES IN NUCLIDE CONCENTRATIONS OF THIS CLASS -
C                                                                         -
CD    IX(34-36)      RESERVED                                             -
C                                                                         -
CD    IX(37)         OPTION TO PRODUCE DELAYED NEUTRON PROPERTIES WITH    -
CD                       FLUX, ADJOINT WEIGHTING USING FILE -PERTUB- AND -
CD                       -DLAYXS-                                         -
C                                                                         -
CD    IX(38-40)      RESERVED                                             -
C                                                                         -
```

(CONT)

```
CD     IX(41)         OPTION TO COLLAPSE CROSS SECTIONS IN ENERGY, FILE   -
CD                        -ISOTXS-TO-ISOTXS- USING THE ENERGY STRUCTURE   -
CD                        GIVEN AS GROUP LOWER BOUNDS DESCENDING EV, DATA -
CD                        IN ARRAY XX STARTING AT XX(31) TERMINATING WITH -
CD                        A ZERO ENTRY FOR THE LAST GROUP                 -
CD                        1- PRODUCE MACROSCOPIC CROSS SECTIONS FOR PSEUDO-
CD                           DENSITY UNITY FOR EACH ZONE, FLUX WEIGHTED   -
CD                        2- PRODUCE ONE-TO-ONE NUCLIDE DATA ONLY FOR THE -
CD                           ONES HAVING NON-ZERO CONCENTRATIONS WITH FLUX-
CD                           WEIGHTING USING FILE -RZFLUX-                -
CD                        3- SAME AS 2 EXCEPT FLUX, ADJOINT WEIGHTING     -
CD                           REQUIRING FILE -PERTUB-                      -
C                                                                         -
CD     IX(42-50)      RESERVED                                            -
C                                                                         -
CD     IX(51)         OPTION TO GENERATE A DISTRIBUTED NEUTRON SOURCE FILE-
CD                        -FIXSRC- USING FLUX FROM -RTFLUX-               -
CD                        1- TOTAL PRODUCTIONS FROM FISSION MULTIPLIED BY -
CD                           XX(3) NORMALIZED TO A TOTAL OF XX(3)*XX(4)   -
CD                           IF XX(4) IS NON ZERO, XX(3) SET TO UNITY IF 0-
CD                        2- TOTAL DELAYED NEUTRON SOURCE USING FILE      -
CD                           -DLAYXS-                                     -
CD                        3- ASYMPTOTIC DELAYED NEUTRON SOURCE USING THE  -
CD                           FAMILY OF LONGEST HALF LIFE (ASSUMES DISTINCT-
CD                           ONE APPLIES) USING FILE -DLAYXS-             -
C                                                                         -
CD     IX(52)         OPTION TO GENERATE A ZONE-GROUP DISTRIBUTED SOURCE  -
CD                        FILE -FIXSRC- USING ZONE AVERAGE FLUX FILE      -
CD                        -RZFLUX- (SEE OPTIONS IMMEDIATELY ABOVE)        -
C                                                                         -
CD     IX(53-100)     RESERVED                                            -
C                                                                         -
C-------------------------------------------------------------------------
```

(CONT)

SPECIFICATIONS FOR RODINS RECORD IN INTERFACE FILE CONTRL

```
C-----------------------------------------------------------------------
CR          CONTROL ROD POSITIONING INSTRUCTIONS                        -
C                                                                       -
CL    RODINS, (XX(I),I=1,100),(IX(I),I=1,100)                           -
C                                                                       -
CW          101*MULT + 100                                              -
C                                                                       -
CD    RODINS        ROD POSITIONING MODULE DATA IDENTIFIER (6HRODINS).  -
C                                                                       -
CC    NOTE - THE INTERFACE FILES 'CONTRL' 'RODSET' 'NDXSRF' 'ZNATDN'    -
CC           AND 'GEODST' ARE REQUIRED.                                 -
C                                                                       -
CD    XX(1)         REFERENCE HISTORY TIME (CYCLE TIME), DAYS, BETWEEN  -
CD                  FUELINGS DURING WHICH A SUCCESSION OF CONTROL ROD   -
CD                  POSITIONINGS ARE TO BE DONE (SEE IX(10)=0 BELOW) -  -
CD                  USED FOR THE FIRST NSRPS SET (IX(8)=1).             -
C                                                                       -
CD    XX(2)         REFERENCE HISTORY TIME TO BE USED FOR ALL BUT THE   -
CD                  FIRST NSRPS SET (IX(8).GT.1) - DEFAULTED TO XX(1)   -
CD                  IF 0.                                               -
C                                                                       -
CD    IX(3)         EDIT OPTIONS.                                       -
CD                    0- NO SPECIAL EDITS.                              -
CD                    1- ROD-FOLLOWER ZONE DENSITIES AFTER POSITIONING. -
CD                    2- PLUS SOME INFORMATION ABOUT ROD POSITIONING.   -
CD                    3- PLUS MORE INFORMATION ABOUT ROD POSITIONING.   -
CD                    4- PLUS CONTENTS OF THE COMMON DATA BLOCK.        -
CD                    5- PLUS THE CONTENTS OF FILES 'NDXSRF', 'ZNATDN', -
CD                       AND THIS RECORD 'RODINS' OF FILE 'CONTRL'.     -
C                                                                       -
CD    IX(8)         THE SET NUMBER OF THE ROD POSITIONING SPECIFICATIONS-
CD                  (OUT OF NSRPS SETS ON FILE 'RODSET') THAT IS TO BE  -
CD                  USED THIS ACCESS. DEFAULTED TO 1 IF 0. (APPLICABLE  -
CD                  FOR IX(10) =0, OR =L BELOW).                        -
C                                                                       -
CD    IX(9)         ANOTHER SET NUMBER OF THE ROD POSITIONING           -
CD                  SPECIFICATIONS THAT IS TO BE USED THIS ACCESS       -
CD                  (IF.GT.0) AFTER USING THE IX(8) SET.                -
C                                                                       -
CD    IX(10)        OPTIONS ON ROD POSITIONING.                         -
CD                   -4- RECOVER ALL ROD AND FOLLOWER CONCENTRATIONS    -
CD                       FROM THE NEXT-TO-LATEST VERSION OF THE ZONE    -
CD                       DENSITY FILE 'YNATDN' (SEE IX(11) AND IX(12)   -
CD                       BELOW). IF NEXT-TO-LATEST VERSION DOES NOT     -
CD                       EXIST, USE LATEST VERSION.                     -
CD                   -3- RECOVER ALL ROD AND FOLLOWER CONCENTRATIONS    -
CD                       FROM THE LATEST VERSION OF FILE 'YNATDN'.      -
CD                   -2- INSERT RODS FULLY AS SPECIFIED BY OPTION NSE   -
CD                       IN THE FILE 'RODSET'.                          -
CD                   -1- WITHDRAW RODS FULLY AS SPECIFIED BY OPTION NSE -
CD                       IN THE FILE 'RODSET'.                          -
```

(CONT)

```
CD                    0- AUTOMATED PROCEDURE.                          -
CN                       IF THE TIME XX(1).GT.0 ----- THE REFERENCE    -
CN                       TIME INTO THE CYCLE (TR) IS OBTAINED FROM THE -
CN                       DENSITY FILE 'ZNATDN'. THEN THE FRACTION OF   -
CN                       EXPOSURE TIME IS F=TR/XX(1). THE NEAREST      -
CN                       FEH(L) (ON 'RODSET' FILE) TO F IS FOUND, AND  -
CN                       THE CORRESPONDING L IS THEN THE POINT IN THE  -
CN                       HISTORY FOR ROD POSITIONING. IE., THE         -
CN                       SPECIFICATIONS NZI(J,L) (ON 'RODSET' FILE)    -
CN                       ARE USED TO POSITION THE RODS. NOTE THAT WITH -
CN                       THIS OPTION, IT IS POSSIBLE THAT SOME POINTS  -
CN                       IN THE HISTORY MAY BE SKIPPED.                -
CN                       IF THE TIME XX(1).EQ.0 ----- ON THE FIRST     -
CN                       ACCESS OF RODMOD, THE CONTROL RODS ARE        -
CN                       POSITIONED AS SPECIFIED AT POINT 1 IN THE     -
CN                       HISTORY (NZI(J,L=1)). THEN ON EACH SUBSEQUENT -
CN                       ACCESS FOR WHICH THIS NUMBER IX(10)=0, THE    -
CN                       POINT IN THE HISTORY L IS INCREMENTED BY 1.   -
CN                       IF L EXCEEDS THE NUMBER OF POINTS GIVEN (NCYD -
CN                       ON 'RODSET') THE LAST POINT L=NCYD IS REUSED. -
CN                       THIS OPTION ASSURES THAT THE RODS ARE         -
CN                       POSITIONED AS SPECIFIED FOR ALL POINTS IN THE -
CN                       HISTORY, IN ORDER, WITH NO POINTS SKIPPED.    -
CN                       IF THE CYCLE NUMBER FROM THE FILE 'ZNATDN' IS -
CN                       GREATER THAN THE CYCLE NUMBER IN THE PREVIOUS -
CN                       RODMOD ACCESS, L IS RESET TO 1.               -
CD                    L- POSITION RODS AS SPECIFIED (AT THIS POINT L IN -
CD                       THE HISTORY) BY THE DATA (NZI(J,L)) IN THE    -
CD                       FILE 'RODSET'.                                -
C                                                                      -
CD     IX(11)       OPTION TO INSERT SHUT-DOWN (SAFETY) RODS.          -
CD                    0- NO.                                           -
CD                    1- AFTER ANY OPTION IX(10).NE.0 (ABOVE) HAS BEEN -
CD                       APPLIED, INSERT SHUT-DOWN RODS USING SPECIAL  -
CD                       DATA PRESENT IN THE FILE 'RODSET'. IF OPTION  -
CD                       IX(10)=0, ONLY SHUT-DOWN RODS ARE INSERTED    -
CD                       AND NO OTHER POSITIONING IS DONE. WHEN THIS   -
CD                       OPTION IS SPECIFIED, AFTER ANY POSITIONING IS -
CD                       DONE (IX(10).NE.0) AND BEFORE INSERTION OF    -
CD                       SHUT-DOWN RODS, A NEW VERSION OF THE ZONE     -
CD                       DENSITY FILE 'YNATDN' IS WRITTEN. THIS IS DONE -
CD                       SO THAT RECOVERY OF THE CONCENTRATIONS PRIOR  -
CD                       TO INSERTION OF THE SHUT-DOWN RODS MAY BE DONE -
CD                       ON THE NEXT OR ANY SUBSEQUENT ACCESS (SEE     -
CD                       IX(10)=-4, OR -3 ABOVE).                      -
CD                       NORMALLY IT IS NECESSARY TO SOLVE A NEUTRONICS -
CD                       PROBLEM BEFORE AND AFTER SUCH INSERTION       -
CD                       WITHOUT OTHER ACTION (AS EXPOSURE) IN BETWEEN -
CD                       TO PRODUCE TWO VALUES OF THE MULTIPLICATION   -
CD                       FACTOR GIVING DELTA-K FOR THE INSERTION.      -
CD                    2- SAME AS 1 BUT THE NEW VERSION OF 'YNATDN' IS  -
CD                       WRITTEN BEFORE ANY POSITIONING (IX(10).NE.0)  -
CD                       IS DONE.                                      -
```

(CONT)

```
CD     IX(12)        OPTION ON SAVING THE ZONE DENSITY INTERFACE FILE    -
CD                   'YNATDN', ONLY IF IX(11)=0.                         -
CD                    -1- NO.                                            -
CD                     0- IF NO FILE EXISTS, CREATE IT WITH DENSITIES -  -
CD                          A) AFTER FULL ROD INSERTION (IX(10)=-2)      -
CD                             IF SPECIFIED, OR                          -
CD                          B) RECOVERED FROM LATEST 'ZNATDN' FILE.      -
CD                        IF A FILE EXISTS, NONE IS WRITTEN.             -
CD                     1- WRITE IT AFTER FULL ROD INSERTION (IX(10)=-2). -
CD                     2- WRITE IT AFTER ANY ROD POSITIONING             -
CD                        SPECIFICATION.                                 -
C                                                                        -
CD     IX(13)        OPTION ON DELETING THE LATEST VERSION OF THE ZONE   -
CD                   DENSITY FILE 'YNATDN' AFTER APPLYING SPECIFICATIONS,-
CD                   PROVIDED IT WAS NOT CREATED THIS ACCESS.            -
CD                     0- NO.                                            -
CD                     1- DELETE THE LATEST VERSION OF 'YNATDN' BUT      -
CD                        ONLY IF MORE THAN 1 VERSION EXISTS.            -
C                                                                        -
CD     IX(14)        BLACK ABSORBER OPTION FOR ROD ZONES.                -
CD                     0- NO.                                            -
CD                     1- YES (GENERALLY REQUIRED FOR THERMAL REACTORS   -
CD                        WITH RODS REPRESENTED EXPLICITLY).             -
CD                        NORMALLY THE LATEST VERSION OF 'GEODST' IS     -
CD                        READ TO OBTAIN THE BLACK ABSORBER ZONES AND    -
CD                        A NEW VERSION IS WRITTEN IF ONLY ONE EXISTS,   -
CD                        OTHERWISE THE LATEST VERSION IS RE-WRITTEN.    -
CD                        IF IX(10)=-4, THE NEXT-TO-LATEST VERSION OF    -
CD                        'GEODST' IS READ TO OBTAIN THE BLACK ABSORBER  -
CD                        ZONES.                                         -
CD                        WHEN CONTROL ROD INTERCHANGES ARE APPLIED,     -
CD                        BLACK ABSORBER CONDITIONS ARE MOVED WITH THE   -
CD                        INTERCHANGES. SOME ROD ZONES MAY NOT BE BLACK  -
CD                        AND NEVER BECOME BLACK IF ONLY THE ROD         -
CD                        INTERCHANGE SPECIFICATIONS ARE USED (NO        -
CD                        INSERTION SPECIFICATIONS). WHEN INSERTION      -
CD                        SPECIFICATIONS ARE APPLIED, ALL ZONES          -
CD                        CONTAINING CONTROL ROD ARE ASSIGNED THE BLACK  -
CD                        ABSORBER CONDITION, LIMITING APPLICATION TO    -
CD                        ONLY FULLY EXPLICIT CONTROL ROD                -
CD                        REPRESENTATION.                                -
C                                                                        -
C-----------------------------------------------------------------------
```

(CONT)

SPECIFICATIONS FOR EXPINS RECORD IN INTERFACE FILE CONTRL

```
C-----------------------------------------------------------------------
CR          EXPOSURE MODULE INSTRUCTIONS                                -
C                                                                       -
C                      REFERENCE 02/01/79 ORNL-5180                     -
C                       MODIFIED 05/01/79                               -
C                                                                       -
CL    EXPINS, (XX(I),I=1,100),(IX(I),I=1,100)                           -
C                                                                       -
CW          101*MULT + 100                                              -
C                                                                       -
CD    EXPINS        EXPOSURE MODULE DATA IDENTIFIER (6HEXPINS)          -
C                                                                       -
CN*           OPTION NOT IMPLEMENTED                                    -
CN**          OPTION NOT RECOMMENDED                                    -
C                                                                       -
CD    XX(1)         EXPOSURE TIME STEP (DAYS)                           -
CD**                   (A NEGATIVE TIME IS USED FOR SPECIAL SITUATIONS) -
C                                                                       -
CD    XX(2)         SHUTDOWN TIME STEP AFTER EXPOSURE (DAYS AT ZERO     -
CD                   FLUX)                                              -
C                                                                       -
CD    XX(3)         THE RATIO OF EACH SHUTDOWN SUBSTEP TIME INTERVAL    -
CD                   TO THAT OF THE PREVIOUS SUBSTEP (APPLICABLE        -
CD                   ONLY IF IX(7) .GT. 1)                              -
CD                   (DEFAULT TO 1.0)                                   -
C                                                                       -
CD    XX(4)         RESERVED                                            -
C                                                                       -
CD    XX(5)         RESERVED                                            -
C                                                                       -
CD    XX(6)         RELATIVE POWER LEVEL (ALL REACTION RATES ARE        -
CD                   MULTIPLIED BY THIS FACTOR IF NONZERO - PROPER      -
CD                   NORMALIZATION OF THE FLUX LEVEL BY THE NEUTRONICS  -
CD                   CODE TO EFFECT SOME POWER LEVEL IS PRESUMED)       -
C                                                                       -
CD    XX(7)         RESERVED                                            -
C                                                                       -
CD    XX(8)         RESERVED                                            -
C                                                                       -
CD    XX(9)         RESERVED                                            -
C                                                                       -
CD    XX(10)        WEIGHTING FACTOR FOR USE WITH TWO FLUX INTERFACE    -
CD                   FILES (IF IX(13) .EQ. -2)                          -
C                                                                       -
CD                   PHI(USED) = PHI(LV) + XX(10)*(PHI(NTLV) - PHI(LV)) -
CD                    WHERE PHI(LV) IS LATEST VERSION (IN TIME) FLUX    -
CD                    WHERE PHI(NTLV) IS NEXT-TO-LATEST VERSION (IN     -
CD                     TIME) FLUX                                       -
CD                   (DEFAULT TO 0.5)                                   -
C                                                                       -
```

(CONT)

```
CD     XX(11)        FLUENCE LOWER BOUND FOR FIRST ENERGY RANGE (EV)      -
C                                                                         -
CD     XX(12)        FLUENCE LOWER BOUND FOR SECOND ENERGY RANGE (EV)     -
C                                                                         -
CD     XX(13)        CONVERGENCE LEVEL FOR MATRIX EXPONENTIAL METHOD      -
CD                    (DEFAULT TO 1.0E-8)                                 -
C                                                                         -
CD     XX(14)        LIMITING VALUE OF DIAGONAL TERM FOR MATRIX           -
CD                    EXPONENTIAL METHOD (EACH SUBSTEP IS SUBDIVIDED      -
CD                    INTO AS MANY TIME INCREMENTS AS NEEDED TO REDUCE    -
CD                    THE LARGEST DIAGONAL TERM TO THIS LEVEL)            -
CD                    (DEFAULT TO 12.0)                                   -
C                                                                         -
CD     XX(15)        MATRIX EXPONENTIAL TRANSFORM, FRACTION OF LARGEST    -
CD                    DIAGONAL TERM                                       -
CD                    (DEFAULT TO 0.5)                                    -
C                                                                         -
CD     XX(16)        MINIMUM NUCLIDE DENSITY ALLOWED                      -
CD                    (DEFAULT TO 1.0E-50)                                -
C                                                                         -
CD     XX(17)        MAGNITUDE OF DIAGONAL TERM USED AS CRITERIA FOR      -
CD                    APPLYING THE EQUILIBRIUM APPROXIMATION TO A         -
CD                    NUCLIDE WITH THE MATRIX EXPONENTIAL METHOD          -
CD                    (DEFAULT TO  2.0*XX(14))                            -
C                                                                         -
CD     XX(18)        WEIGHTING FACTOR FOR EXPOSURE NUCLIDE DENSITIES      -
CD                    WRITTEN ON INTERFACE FILE (IF IX(31) .NE. 0)        -
CD                    'ZNATDN' FOR ZONE CALCULATION                       -
CD                    'PTATDN' FOR POINT CALCULATION                      -
C                                                                         -
CD                     N(WRITTEN) = N(E) + XX(18)*(N(S) - N(E))           -
CD                     WHERE N(E) ARE DENSITIES AT END OF EXPOSURE        -
CD                     WHERE N(S) ARE DENSITIES AT START OF EXPOSURE      -
CD                    (DEFAULT TO 0.5)                                    -
C                                                                         -
CD     XX(19)        AVERAGE GENERATION RATE WEIGHTING FACTOR FOR         -
CD                    SOURCE TERM                                         -
C                                                                         -
CD                    PRECURSOR DENSITY IS                                -
CD                    XX(19)*N(T) + (1.0 - XX(19))*N(T+DT)                -
CD                    (DEFAULT TO 0.5)                                    -
C                                                                         -
CD     XX(20)        CONVERGENCE CRITERIA ON POWER LEVEL FOR CONTINUOUS   -
CD                    FUELING MODEL TO DISCONTINUE POWER LEVEL            -
CD                    INITIALIZATION PASSES (APPLICABLE IF IX(51) .GT. 0  -
CD                    AND/OR IX(52) .GT. 0 AND IX(61) .GT. 1)             -
CD                    (DEFAULT TO 0.005)                                  -
C                                                                         -
CD     XX(21)        RESERVED                                             -
C                                                                         -
```

(CONT)

```
CD     XX(22)          RESERVED                                          -
C                                                                        -
CD     XX(23)          RESERVED                                          -
C                                                                        -
CD     XX(24)          RESERVED                                          -
C                                                                        -
CD     XX(25)          REFERENCE TEMPERATURE (DEGREES C) OF THE          -
CD                      NEXT-TO-LATEST VERSION 'GRUPXS' CROSS SECTION    -
CD                      INTERFACE FILE                                   -
C                                                                        -
CD     XX(26)          REFERENCE TEMPERATURE (DEGREES C) OF THE          -
CD                      LATEST VERSION 'GRUPXS' CROSS SECTION INTERFACE  -
CD                      FILE                                             -
C                                                                        -
CD     XX(27)          CORRELATION PARAMETER FOR THE ARCTANGENT          -
CD                      DEPENDENCE OF CROSS SECTIONS ON ZONE             -
CD                      TEMPERATURES (LINEAR CORRELATION IF 0.0)         -
C                                                                        -
CD     XX(28)          RESERVED                                          -
C                                                                        -
CD     XX(29)          RESERVED                                          -
C                                                                        -
CD     XX(30)          RESERVED                                          -
C                                                                        -
CD     XX(31-100)      CORE RESIDENCE TIME (DAYS) FOR EACH ZONE PATH     -
CD                      FOLLOWED BY THE CORE RESIDENCE TIME (DAYS) FOR   -
CD                      EACH SUBZONE PATH (IF ANY) - SEE IX(51)          -
CD                      (DEFAULT TO XX(1))                               -
C                                                                        -
CN           USUAL VALUES OF SOME OF THE PARAMETERS ARE SHOWN HERE IN ( )-
C                                                                        -
CD     IX(1)           RESERVED                                          -
C                                                                        -
CD     IX(2)           CONDENSED EDIT OPTION                             -
CD                      0- YES                                           -
CD                      1- NO                                            -
C                                                                        -
CD     IX(3)           DEBUG EDIT OPTION (0)                             -
CD                      0- NO SPECIAL EDITS                              -
CD                      1- CROSS REFERENCE TABLES, EXPOSURE DATA,        -
CD                         CHECK AND EDIT DATA FROM 'EXPOSE' INTERFACE   -
CD                         FILE, AND EDIT INTERFACE FILE PARAMETERS      -
CD                      2- HIGHER LEVEL DATA EDIT                        -
CD                      3- PLUS STARTING NUCLIDE DENSITIES               -
CD                      4- PLUS INTERMEDIATE LEVEL DATA                  -
CD                      5- PLUS STARTING REACTION RATES                  -
CD                      6- PLUS ALL EDIT OPTIONS ARE TURNED ON           -
CD                      7- PLUS MATRIX EXPONENTIAL AND AVERAGE GENERATION -
CD                         RATE DEBUG EDITS                              -
CD                      8- PLUS ADDITIONAL MATRIX EXPONENTIAL DEBUG EDITS -
C                                                                        -
CN             NOTE- USE OF 6,7, OR 8 WILL PRODUCE REAMS OF PAPER        -
C                                                                        -
```

(CONT)

```
CD    IX(4)          RESERVED                                          -
C                                                                      -
CD    IX(5)          OPTION ON BASIC CHAIN EQUATION SOLUTION METHOD    -
CD                    (CONSISTENT CHAIN DATA MUST BE PRESENT ON        -
CD                    INTERFACE FILE 'EXPOSE')                         -
CD                    0- MATRIX EXPONENTIAL                            -
CD                    1- EXPLICIT CHAIN                                -
CD                    2- AVERAGE GENERATION RATE                       -
CD                    3- MATRIX EXPONENTIAL (NO COUPLING)              -
CD                    5- AVERAGE GENERATION RATE (NO COUPLING)         -
C                                                                      -
CN                   (IF IX(5) .EQ. 0 AND NMATXE('EXPOSE') .EQ. 0 AND  -
CN                   LBEXCH('EXPOSE') .GT. 0, DEFAULT TO 1)            -
CN                                                                     -
CN                   (IF IX(5) .EQ. 2 AND NMATXE('EXPOSE') .EQ. 0 AND  -
CN                   LBEXCH('EXPOSE') .GT. 0, DEFAULT TO 1)            -
CN                                                                     -
CN                   (IF IX(5) .EQ. 1 AND LBEXCH('EXPOSE') .EQ. 0 AND  -
CN                   NMATXE('EXPOSE') .GT. 0, DEFAULT TO 0)            -
C                                                                      -
CD    IX(6)          NUMBER OF SUBSTEP EXPOSURE INTERVALS              -
CD                    IX(6) .GT. 1 IS NORMALLY USED ONLY WHEN THE FLUX -
CD                     LEVEL IS TO BE ADJUSTED (SEE IX(12))           -
CD                    (DEFAULT TO 1 IF XX(1) .NE. 0.0)                 -
C                                                                      -
CN                   EXPOSURE NOT CALCULATED IF XX(1) .EQ. 0.0         -
C                                                                      -
CN                   FOR CONTINUOUS FUELING MODEL SET IX(6) .EQ. 1     -
C                                                                      -
CD    IX(7)          NUMBER OF SUBSTEP SHUTDOWN INTERVALS              -
CD                    IX(7) .GT. 1 IS NORMALLY USED ONLY TO PRODUCE    -
CD                     EDITS AT POINTS ALONG SHUTDOWN STEP             -
CD                    (DEFAULT TO 1 IF XX(2) .GT. 0.0)                 -
C                                                                      -
CN                   SHUTDOWN NOT CALCULATED IF XX(2) .LE. 0.0         -
C                                                                      -
CD    IX(8)          OPTION ON VERSION OF NUCLIDE DENSITIES AT START   -
CD                    'ZNATDN' FOR ZONE CALCULATION                    -
CD                    'PTATDN' FOR POINT CALCULATION (IF NOT AVAILABLE -
CD                     DENSITIES WILL BE EXTRACTED FROM INITIAL ZONE   -
CD                     DENSITIES)                                      -
CD                   -1- USE VERSION WITH THE SAME TIME AS THE ZONE    -
CD                       FLUX FILE                                     -
CD                    0- USE LATEST VERSION (USUAL)                    -
CD                    1- USE NEXT-TO-LATEST VERSION IF IT EXISTS       -
C                                                                      -
CD    IX(9)          OPTION TO ACCOUNT FOR THE DEPENDENCE OF THE       -
CD                    CROSS SECTIONS ON THE LOCAL TEMPERATURE, REQUIRES -
CD                    TWO 'GRUPXS' FILES, A 'ZNTEMP' FILE, AND REFERENCE -
CD                    TEMPERATURES (SEE XX(25),XX(26), AND XX(27))     -
CD                    0- NO                                            -
CD                    1- YES                                           -
```

(CONT)

```
C                                                                       -
CD     IX(10)          RESERVED                                         -
C                                                                       -
CD     IX(11)          NUMBER OF SUBDIVISIONS OF EACH SUBSTEP FOR THE   -
CD                      AVERAGE GENERATION RATE METHOD (IF ZERO, THE    -
CD                      CHOICE IS AUTOMATED)                            -
C                                                                       -
CD     IX(12)          OPTION ON POWER RENORMALIZATION (SUBSTEPS)       -
CD                      0- ATTEMPT TO SATISIFY DESIRED POWER LEVEL BY   -
CD                         ADJUSTING FLUX LEVEL AT THE START OF EACH    -
CD                         SUBSTEP AFTER THE FIRST                      -
CD                      1- DO NOT ADJUST THE FLUX LEVEL                 -
CD                      2- NORMALIZE TO THE INITIAL POWER LEVEL AT THE  -
CD                         START OF EACH SUBSTEP                        -
C                                                                       -
CD     IX(13)          OPTION ON FLUX VALUES                            -
CD                      'RZFLUX' FOR ZONE CALCULATION                   -
CD                      'RTFLUX' FOR POINT CALCULATION (IF IX(73) .EQ. 1) -
CD                      'RZFLUX' (MODIFIED) FOR POINT CALCULATION       -
CD                       (IF IX(73) .EQ. 2)                             -
CD                     -2- WEIGHT LATEST VERSION AND NEXT-TO-LATEST     -
CD                         VERSION (SEE XX(10))                         -
CD                     -1- USE A LINEAR FLUX APPROXIMATION WITH TIME FROM -
CD                         THE NEXT-TO-LATEST VERSION FILE TO THE LATEST -
CD                         VERSION FILE (IF ONLY ONE EXISTS, USE IT)    -
CD                      0- USE LATEST VERSION (USUAL)                   -
CD                      1- USE NEXT-TO-LATEST VERSION IF IT EXISTS      -
C                                                                       -
CD     IX(14)          OPTION ON ZONE(SUBZONE) NUCLIDE DENSITY EDITS    -
CD                      (EXPOSURE)                                      -
CD                      0- NONE                                         -
CD                      1- END OF EXPOSURE STEP                         -
CD                      2- END OF EACH EXPOSURE SUBSTEP                 -
C                                                                       -
CD     IX(15)          RESERVED                                         -
C                                                                       -
CD     IX(16)          RESERVED                                         -
C                                                                       -
CD     IX(17)          RESERVED                                         -
C                                                                       -
CD     IX(18)          OPTION ON SECONDARY ENERGY DEPOSITION EDITS      -
CD                      0- NONE                                         -
CD                      1- DECAY ENERGY RELEASE ONLY                    -
CD                      2- FISSION ENERGY RELEASE ONLY                  -
CD                      3- CAPTURE ENERGY RELEASE ONLY                  -
CD                      4- DECAY + FISSION + CAPTURE ENERGY RELEASE     -
C                                                                       -
CN                     IF .GT. 0, EDITS BY ZONE AND SUBZONE             -
CN                     IF .LT. 0, EDIT TOTALS ONLY                      -
C                                                                       -
```

(CONT)

```
CD     IX(19)        RESERVED                                          -
C                                                                      -
CD     IX(20)        OPTION ON ZONE(SUBZONE) NUCLIDE DENSITY EDITS     -
CD                    (SHUTDOWN)                                       -
CD                    0- NONE                                          -
CD                    1- END OF SHUTDOWN STEP                          -
CD                    2- END OF EACH SHUTDOWN SUBSTEP                  -
C                                                                      -
CD     IX(21)        SPECIAL NUCLIDE DENSITY EDIT OPTION FOR A SINGLE  -
CD                    ZONE PROBLEM                                     -
CD                   -1- COLUMN EDIT IN 0PE15.6 FORMAT                 -
CD                    0- NORMAL EDIT                                   -
CD                    1- COLUMN EDIT IN 1PE15.6 FORMAT                 -
C                                                                      -
CD     IX(22)        RESERVED                                          -
C                                                                      -
CD     IX(23)        RESERVED                                          -
C                                                                      -
CD     IX(24)        RESERVED                                          -
C                                                                      -
CD     IX(25)        OPTION ON WRITING EXPOSURE HISTORY INTERFACE FILE -
CD                    'EXPOHT' FOR NORMAL EXPOSURE                     -
CD                    'CFHIST' FOR CONTINUOUS FUELING EXPOSURE         -
CD                    (FLUENCE AND REACTION RATE TYPE DATA)            -
CD                    0- DO NOT WRITE                                  -
CD                    1- YES - SAVE LATEST AND NEXT-TO-LATEST DATA     -
CD                    2- YES - SAVE ALL DATA                           -
CD                    3- YES - SAVE LATEST DATA ONLY                   -
CD                    4- YES - START OVER AGAIN                        -
C                                                                      -
CN                   IF .GT. 0, NO EDIT                                -
CN                   IF .LT. 0, EDITS OF CUMULATIVE DATA BY ZONE AND   -
CN                              SUBZONE                                -
C                                                                      -
CN                   OPTIONS IX(26),IX(27),XX(11), AND XX(12) APPLY ONLY -
CN                          WHEN FILE IS INITIALLY WRITTEN             -
CN                   IF THE FILE EXISTS THE OPTIONS SPECIFIED          -
CN                    ON THE FILE ARE USED                             -
C                                                                      -
CD     IX(26)        FLUENCE DATA TO BE SAVED ON EXPOSURE HISTORY      -
CD                    INTERFACE FILE                                   -
CD                    0- NONE                                          -
CD                    1- TOTAL FLUENCE (AND FIRST AND SECOND           -
CD                        FLUENCE RANGES IF XX(11) AND XX(12) ARE      -
CD                        PROPERLY DEFINED)                            -
C                                                                      -
CD     IX(27)        REACTION RATE TYPE DATA TO BE SAVED ON EXPOSURE   -
CD                    HISTORY INTERFACE FILE                           -
CD                    0- NONE                                          -
CD                    1- FISSIONS AND EXPOSURE                         -
CD                    2- PLUS ENERGY                                   -
CD                    3- PLUS UNDEFINED                                -
```

(CONT)

```
C                                                                       -
CD     IX(28)          OPTION TO EDIT EXPOSURE STEP AVERAGE ZONE(SUBZONE)  -
CD                      POWER DENSITIES                                 -
CD                      0- NO                                           -
CD                      1- YES                                          -
C                                                                       -
CD     IX(29)          OPTION TO WRITE INTERFACE FILE 'ZNPOWD' WITH    -
CD                      EXPOSURE STEP AVERAGE ZONE(SUBZONE) POWER       -
CD                      DENSITIES                                       -
CD                      0- DO NOT WRITE                                 -
CD                      1- REPLACE THE LATEST VERSION OF AN OLD FILE,   -
CD                          IF NONE EXISTS WRITE NEW FILE               -
CD                      2- WRITE NEW FILE                               -
C                                                                       -
CD     IX(30)          OPTION ON NUCLIDE DENSITY FILE WRITING          -
CD                      'ZNATDN' FOR ZONE CALCULATION                   -
CD                      'PTATDN' FOR POINT CALCULATION                  -
CD                      0- WRITE OVER LATEST EXISTING FILE WITH END OF  -
CD                          EXPOSURE DENSITIES                          -
CD                      1- WRITE NEW FILE WITH END OF EXPOSURE DENSITIES -
CD                      2- WRITE OVER LATEST EXISTING FILE WITH END OF  -
CD                          SHUTDOWN DENSITIES                          -
CD                      3- WRITE NEW FILE WITH END OF SHUTDOWN DENSITIES -
CD                      4- WRITE OVER LATEST EXISTING FILE WITH END OF  -
CD                          EXPOSURE DENSITIES AND WRITE NEW FILE WITH  -
CD                          END OF SHUTDOWN DENSITIES                   -
CD                      5- WRITE NEW FILE WITH END OF EXPOSURE DENSITIES -
CD                          AND WRITE NEW FILE WITH END OF SHUTDOWN     -
CD                          DENSITIES                                   -
C                                                                       -
CD     IX(31)          OPTION TO WRITE WEIGHTED AVERAGE EXPOSURE DENSITIES -
CD                      (SEE XX(18))                                    -
CD                      'ZNATDN' FOR ZONE CALCULATION                   -
CD                      'PTATDN' FOR POINT CALCULATION                  -
CD                     -1- REPORT NORMAL END OF EXPOSURE TIME           -
CD                      0- NO                                           -
CD                      1- REPORT WEIGHTED TIME                         -
C                                                                       -
CD     IX(32)          OPTION TO CHECK AND EDIT DATA FROM INTERFACE FILE -
CD                      'EXPOSE'                                        -
CD                      0- NO                                           -
CD                      1- YES                                          -
C                                                                       -
CD     IX(33)          OPTION TO EDIT INITIAL ZONE(SUBZONE) SPECIFIC   -
CD                      REACTION RATES                                  -
CD                      0- NO                                           -
CD                      1- YES                                          -
C                                                                       -
```

(CONT)

```
CD     IX(34)        OPTION TO EDIT INITIAL ZONE(SUBZONE) SPECIFIC      -
CD                    REACTION RATE FOR FISSION IN YIELD DATA           -
CD                    ENERGY RANGES                                     -
CD                    0- NO                                             -
CD                    1- YES                                            -
C                                                                       -
CD     IX(35)        OPTION TO EDIT INITIAL ZONE(SUBZONE) NUCLIDE       -
CD                    DENSITIES                                         -
CD                    0- NO                                             -
CD                    1- YES                                            -
C                                                                       -
CD     IX(36)        OPTION TO FORCE CALCULATION INTO I/O MODE (NORMALLY -
CD                    DETERMINED BY CODE BASED ON MEMORY AVAILABLE)     -
CD                    0- NO (AUTOMATED)                                 -
CD                    1- YES                                            -
C                                                                       -
CD     IX(37)        OPTION TO INCREASE STORAGE FOR COUPLING TERMS      -
CD                    FOR MATRIX EXPONENTIAL METHOD (IN THE EVENT       -
CD                    STOP 4321 OCCURS)                                 -
CD                    (DEFAULT - NUMBER OF NUCLIDES IN EXPOSURE DATA)   -
C                                                                       -
CD**   IX(38)        OPTION TO SOLVE THE TRANSPOSE OF THE MATRIX FOR    -
CD**                   THE MATRIX EXPONENTIAL METHOD (THIS IS A SPECIAL -
CD**                   FEATURE - NOT APPLICABLE TO A REACTOR CALCULATION)-
CD**                  0- NO                                             -
CD**                  1- YES                                            -
C                                                                       -
CD     IX(39)        MATRIX EXPONENTIAL EQUILIBRIUM OPTION              -
CD                    0- DEFAULT, SAME AS 1                             -
CD                    1- APPLY EQUILIBRIUM ASSUMPTION TO HIGH LOSS      -
CD                       NUCLIDES                                       -
CD                    2- DO NOT APPLY EQUILIBRIUM ASSUMPTION (REQUIRED  -
CD                       FOR HIGH ACCURACY (BENCHMARKING) BUT IS        -
CD                       EXPENSIVE IN TERMS OF RUNNING TIME)            -
C                                                                       -
CD     IX(40)        MATRIX EXPONENTIAL FORMULATION OPTION              -
CD                    0- DEFAULT, SAME AS 4                             -
CD                    1- NO TRANSFORMATION, ONE TERM                    -
CD                    2-    TRANSFORMATION, ONE TERM                    -
CD                    3- NO TRANSFORMATION, TWO TERM                    -
CD                    4-    TRANSFORMATION, TWO TERM                    -
C                                                                       -
CD     IX(41)        MATRIX EXPONENTIAL REFERENCE NUMBER OF TERMS       -
CD                    IN EXPANSION                                      -
CD                    (DEFAULT TO 60)                                   -
C                                                                       -
CD     IX(42)        NUMBER OF SUBDIVISIONS OF EACH SUBSTEP FOR THE     -
CD                    MATRIX EXPONENTIAL METHOD (IF ZERO, THE CHOICE    -
CD                    IS AUTOMATED)                                     -
C                                                                       -
```

(CONT)

```
CD     IX(43)        UPPER BOUND ON NUMBER OF SUBDIVISIONS OF EACH       -
CD                    SUBSTEP FOR THE MATPIX EXPONENTIAL METHOD.         -
CD                    (IF IX(39) .EQ. 2 AND THE NUMBER OF SUBDIVISIONS   -
C                     COMPUTED BY THE CODE EXCEEDS IX(43) THEN THE       -
CD                    EQUILIBRIUM ASSUMPTION WILL BE USED)               -
CD                    (DEFAULT TO 10000)                                 -
C                                                                        -
CD     IX(44)        RESERVED                                            -
C                                                                        -
CD     IX(45)        EXPLICIT CHAIN MISSING NUCLIDE OPTION (0)           -
CD                    0- TREAT SUBCHAINS                                 -
CD                    1- TREAT FIRST SUBCHAIN ONLY                       -
CD                    2- SKIP CHAIN                                      -
C                                                                        -
CD     IX(46)        RESERVED                                            -
C                                                                        -
CD     IX(47)        RESERVED                                            -
C                                                                        -
CD     IX(48)        RESERVED                                            -
C                                                                        -
CD     IX(49)        OPTION TO ALLOW EXPOSURE WITH ZERO FLUX AND/OR      -
CD                    ZERO ZONE VOLUME                                   -
CD                    0- DO NOT TREAT THE ZONE(SUBZONE)                  -
CD                    1- ALLOW (FOR TREATING OUT-OF-CORE DECAY IN        -
CD                       FALSE ZONES(SUBZONES))                          -
C                                                                        -
CD     IX(50)        RESERVED                                            -
C                                                                        -
CD     IX(51)        FALSE ZONE NUMBER CONTAINING FEED MATERIAL          -
CD                    COMPOSITION FOR ZONE PATHS (OR THE FIRST IN A      -
CD                    SEQUENCE OF FALSE ZONE NUMBERS IF IX(57) .EQ. 1)   -
C                                                                        -
CN            IF IX(51) .GT. 0 AND/OR IX(52) .GT. 0 THE STEADY STATE,    -
CN            CONTINUOUS FUELING MODEL IS TO BE APPLIED.                 -
C                                                                        -
CN            THIS ZONE IS THE FEED BOX (OR THE FIRST OF A SET OF BOXES)-
CN            WHERE FEED MATERIAL FOR EACH FLOW PATH ORIGINATES.         -
CN            THESE ARE FALSE ZONES WHICH MUST BE WITHIN THE DATA        -
CN            DESCRIPTION OF THE PROBLEM, THAT ARE NOT ASSIGNED          -
CN            TO GEOMETRIC LOCATIONS FOR THE NEUTRONICS CALCULATION (THE-
CN            FLUX WILL NOT BE CALCULATED), AND HAVE ASSIGNED NUMBERS    -
CN            LESS THAN THE MAXIMUM ZONE NUMBER IN THE PROBLEM IF        -
CN            THE 'DVENTR' SPECIAL INPUT PROCESSOR IS USED.              -
CN            THE NUCLIDE DENSITIES ALONG A FLOW PATH CALCULATED IN      -
CN            THIS MODEL DEPEND ONLY ON THE FEED MATERIAL, THE           -
CN            NEUTRON FLUX, AND THE RESIDENCE TIME, SO ALL MATERIALS     -
CN            IN THESE ZONES INCLUDING STRUCTURE, MODERATOR, ETC.        -
CN            MUST BE GIVEN IN THE FEED BOX ZONE (ZONES). IF THE         -
CN            DENSITIES OF THE NUCLIDES REPRESENTING STRUCTURAL          -
CN            MATERIAL WERE NOT SPECIFIED FOR THE FEED BOX (OR BOXES),   -
CN            NONE WOULD APPEAR IN THE REACTOR AFTER THE EXPOSURE        -
CN            CALCULATION EVEN THOUGH VALUES WERE ASSIGNED INITIALLY.    -
```

(CONT)

```
CN          FOR SOME SIMPLE SITUATIONS IT IS POSSIBLE TO SEPARATE     -
CN          OUT SELECTED MATERIALS USING THE SUBZONE REPRESENTATION   -
CN          (THOSE MATERIALS ACCOUNTED FOR WOULD NOT BE ASSIGNED      -
CN          CONCENTRATIONS IN THE FEED BOX(ES)). IT IS DESIRABLE      -
CN          TO CARRY AT LEAST ONE NON-DEPLETING NUCLIDE CONCENTRATION -
CN          ALONG THE PATHS TO PROVIDE A MASS BALANCE CHECK.          -
CN          MATERIAL ENTERING A ZONE IS THAT LEAVING THE PREVIOUS     -
CN          ZONE ALONG A PATH, WHILE THE AVERAGE BETWEEN ENTERING     -
CN          AND LEAVING NUCLIDE DENSITIES IN EACH ZONE ARE WRITTEN    -
CN          IN THE NEW NUCLIDE DENSITY FILE 'ZNATDN' FOR USE BY       -
CN          THE NEUTRONICS CODE TO ESTIMATE THE FLUX DISTRIBUTION.    -
CN          THE SPECIAL INPUT DATA FOR THIS MODEL ARE THE RESIDENCE   -
CN          TIMES ALONG FLOW PATHS (XX(31) UP TO XX(100)),            -
CN          XX(20), IX(49), IX(51), IX(52), IX(53), IX(54), IX(55),   -
CN          IX(56), IX(57), IX(58), IX(59), IX(60), IX(61),           -
CN          AND IX(62). THE EXPOSURE TIME XX(1) MUST BE               -
CN          SPECIFIED - IT WILL BE USED FOR RECORD KEEPING AND IT     -
CN          WILL BE USED FOR EXPOSURE OF ANY ZONES NOT IN THE FLOW    -
CN          PATHS, EXCLUDING THE FEED BOX ZONE(S), AS MIGHT BE USED   -
CN          TO REPRESENT A FIXED BLANKET, AND THE FINAL NUCLIDE       -
CN          DENSITIES IN THESE ZONES WILL BE PLACED IN THE NEW        -
CN          NUCLIDE DENSITY FILE (WHICH REQUIRES ACTION TO BE TAKEN   -
CN          TO PREVENT CONTINUING BUILDUP FROM EXPOSURE IN AN         -
CN          ITERATION PROCESS.                                        -
CN          QUITE GENERALLY AN ITERATION PROCESS IS NECESSARY         -
CN          (NEUTRONICS, EXPOSURE) TO ESTABLISH A NEUTRON FLUX        -
CN          DISTRIBUTION WHICH DEPENDS ON THE NUCLIDE DENSITIES       -
CN          AFTER EXPOSURE, THE COMPOSITION IN THE FEED BOX(ES) MUST  -
CN          BE ALTERED TO EFFECT A CRITICAL STATE, AND THE ITERATIVE  -
CN          PROCESS MUST CONVERGE TO A SOLUTION FOR RELIABLE          -
CN          ANALYSIS. IF THE FEED BOX COMPOSITIONS ARE NOT ALTERED,   -
CN          A PSEUDO STEADY STATE CONDITION RESULTS FOR A REACTOR     -
CN          WHICH IS NOT JUST CRITICAL. A CAPABILITY EXISTS TO        -
CN          EFFECT THE CRITICAL STATE BY APPLYING THE CRITICALITY     -
CN          SEARCH OPTION WHEN THE NEUTRONICS PROBLEM IS SOLVED.      -
CN          MATERIALS IN THE REACTOR MUST BE CHANGED AS WELL AS THE   -
CN          CONTENTS OF THE FEED BOXES. AFTER EXPOSURE THE REACTOR    -
CN          CONTENTS DEPEND ON THE FEED, SO THE FEED MUST BE          -
CN          DETERMINED (CHANGING ONLY THE FEED DURING A               -
CN          NEUTRONICS CALCULATION WILL NOT CHANGE THE CURRENT        -
CN          ESTIMATE OF THE REACTOR CONTENTS SINCE THE FEED BOX       -
CN          LIES OUTSIDE OF THE REACTOR AND THE NEUTRONICS SEARCH     -
CN          PROBLEM COULD NOT CONVERGE).                              -
CN          MORE THAN ONE PASS MAY BE MADE THROUGH THE REACTOR.       -
CN          HOLD-UP OUT-OF-CORE MAY BE ALLOWED WITH FALSE ZONES       -
CN          NOT IN THE ACTUAL GEOMETRY (IX(49) MUST BE SET .EQ. 1).   -
CN          NOTE THAT THE ASSIGNMENT OF ZONES AND SUBZONES TO THE     -
CN          GEOMETRY MUST START WITH 1 FOR LOCATIONS RECEIVING        -
CN          FEED AND INDEX UP ALONG FLOW PATHS.                       -
CN          ONLY ONE EXPOSURE SUBSTEP MAY BE REQUESTED FOR THIS       -
CN          OPTION.                                                   -
```

(CONT)

```
C                                                                       -
CN            CONSTRAINTS ON INPUT:                                     -
C                                                                       -
CN                 IX(51) .LE. NUMBER OF ZONES                          -
CN                 IX(51)+IX(53)-1 .LE. NUMBER OF ZONES IF IX(57) .EQ. 1-
CN                 IX(52) .LE. NUMBER OF ZONES                          -
CN                 IX(52)+IX(54)-1 .LE. NUMBER OF ZONES IF IX(58) .EQ. 1-
CN                 IX(55)*IX(53) .LE. MIN(IX(51),IX(52).NE.0) - 1       -
CN                 IX(56)*IX(54) .LE. NUMBER OF SUBZONES                -
CN                 IX(53)+IX(54) .LE. 70                                -
CN                STOP WILL OCCUR IF CONSTRAINTS ARE EXCEEDED           -
C                                                                       -
CD    IX(52)        FALSE ZONE NUMBER CONTAINING FEED MATERIAL          -
CD                   COMPOSITION FOR SUBZONE PATHS (OR THE FIRST IN A   -
CD                   SEQUENCE OF FALSE ZONE NUMBERS IF IX(58) .EQ. 1)   -
C                                                                       -
CD    IX(53)        NUMBER OF ZONE PATHS THROUGH THE REACTOR            -
C                                                                       -
CN                   THE FIRST ZONE IN THE FIRST ZONE PATH IS ZONE      -
CN                   NUMBER 1, AND THE PATH FOLLOWS UP THE NUMBERS      -
C                                                                       -
CD    IX(54)        NUMBER OF SUBZONE PATHS THROUGH THE REACTOR         -
C                                                                       -
CN                   THE FIRST SUBZONE IN THE FIRST SUBZONE PATH IS     -
CN                   SUBZONE NUMBER 1, AND THE PATH FOLLOWS UP THE      -
CN                   NUMBERS                                            -
C                                                                       -
CD    IX(55)        NUMBER OF ZONES ALONG EACH ZONE PATH                -
C                                                                       -
CD    IX(56)        NUMBER OF SUBZONES ALONG EACH SUBZONE PATH          -
C                                                                       -
CD    IX(57)        OPTION ON ZONE FEED MATERIAL                        -
CD                   0- USE ZONE IX(51) AS FEED FOR ALL ZONE PATHS      -
CD                   1- USE ZONES IX(51) THROUGH IX(51)+IX(53)-1        -
CD                       AS FEED FOR EACH ZONE PATH (A DIFFERENT ZONE   -
CD                       FOR EACH ZONE PATH)                            -
C                                                                       -
CD    IX(58)        OPTION ON SUBZONE FEED MATERIAL                     -
CD                   0- USE ZONE IX(52) AS FEED FOR ALL SUBZONE PATHS   -
CD                   1- USE ZONES IX(52) THROUGH IX(52)+IX(54)-1        -
CD                       AS FEED FOR EACH SUBZONE PATH (A DIFFERENT     -
CD                       ZONE FOR EACH SUBZONE PATH)                    -
C                                                                       -
CD    IX(59)        RESERVED                                            -
C                                                                       -
CD    IX(60)        RESERVED                                            -
C                                                                       -
```

(CONT)

```
CD     IX(61)        NUMBER OF PASSES TO ESTABLISH POWER LEVEL REPORTED  -
CD                    BY THE NEUTRONICS CALCULATION                       -
CD                    (DEFAULT TO 1)                                      -
C                                                                         -
CN             THE CALCULATION IS DONE THIS MANY TIMES (OR UNTIL THE      -
CN             CONVERGENCE CRITERIA (SEE XX(20)) IS SATISFIED) WITH       -
CN             THE FLUX LEVEL ADJUSTED AFTER EACH PASS WHICH IMPROVES     -
CN             THE POWER LEVEL AND MAY ACCELERATE THE CONVERGENCE RATE    -
CN             OF A USUAL FEED SEARCH ITERATION PROCEDURE.                -
C                                                                         -
CD*    IX(62)        OPTION TO WRITE INTERFACE FILE 'QNATDN' WITH        -
CD*                   DISCHARGE DENSITIES (FOR CONTINUOUS FUELING MODEL   -
CD*                   ONLY)                                               -
CD*                   0- DO NOT WRITE                                     -
CD*                   1- REPLACE THE LATEST VERSION OF AN OLD FILE,       -
CD*                       IF NONE EXISTS WRITE NEW FILE                   -
CD*                   2- WRITE NEW FILE                                   -
C                                                                         -
CD     IX(63)        RESERVED                                            -
C                                                                         -
CD     IX(64)        RESERVED                                            -
C                                                                         -
CD     IX(65)        RESERVED                                            -
C                                                                         -
CD     IX(66)        RESERVED                                            -
C                                                                         -
CD     IX(67)        RESERVED                                            -
C                                                                         -
CD     IX(68)        RESERVED                                            -
C                                                                         -
CD     IX(69)        RESERVED                                            -
C                                                                         -
CD     IX(70)        RESERVED                                            -
C                                                                         -
CD     IX(71)        RESERVED                                            -
C                                                                         -
CD     IX(72)        RESERVED                                            -
C                                                                         -
CD     IX(73)        OPTION TO PERFORM AUXILIARY POINT CALCULATION       -
CD                   OVER SELECTED ZONES                                 -
CD                   0- NO                                               -
CD                   1- YES - THE ZONE NUMBERS SPECIFIED IN              -
CD                       IX(84)-IX(93), MAXIMUM OF 10, ARE TREATED IF    -
CD                       THE POINT NUCLIDE DENSITY FILE 'PTATDN' DOES    -
CD                       NOT EXIST; IF THIS FILE EXISTS THE REFERENCE    -
CD                       DATA IN THE FILE IS USED TO CONTINUE THE        -
CD                       CALCULATION FOR THE SAME ZONES TREATED          -
CD                       PREVIOUSLY. FILE 'GEODST' IS ACCESSED FOR       -
CD                       IDENTIFYING LOCATIONS OF POINTS IN THE ZONES    -
CD                       AND POINT FLUX VALUES ARE OBTAINED FROM FILE    -
CD                       'RTFLUX'.                                       -
```

(CONT)

```
CD                    2- YES - THE REFERENCE DATA IS INITIALLY TAKEN      -
CD                       FROM THE FILE 'RZFLUX' (MODIFIED) AND THE        -
CD                       POINT FLUX VALUES ARE ALWAYS USED FROM THIS      -
CD                       FILE (AS MADE AVAILABLE FROM A COMPATIBLE        -
CD                       NEUTRONICS CODE). IF THE POINTS DO NOT           -
CD                       AGREE WITH AN EXISTING 'PTATDN' FILE THE         -
CD                       CALCULATION WILL NOT BE DONE.                    -
C                                                                         -
CN                   IN AN ATTEMPT TO PARALLEL THE ZONE CALCULATION       -
CN                    OPTIONS XX(6), XX(10), XX(18), IX(8), IX(12),       -
CN                    IX(13), IX(30), AND IX(31) APPLY TO BOTH ZONE       -
CN                    AND POINT CALCULATIONS                              -
C                                                                         -
CN                   THE PROCEDURE SHOULD MAINTAIN A SET OF POINT         -
CN                    DENSITIES CONSISTENT WITH THE ZONE DENSITIES        -
CN                    BUT CAN NOT ACCOUNT FOR EXTERNAL CHANGES IN         -
CN                    THE ZONE DENSITIES (FROM A NEUTRONICS SEARCH,       -
CN                    OR AFTER REFUELING, OR REPOSITIONING, FOR EXAMPLE)  -
C                                                                         -
CN                   NOT DONE IF IX(51) .GT. 0 OR IX(52) .GT. 0           -
C                                                                         -
CD     IX(74)        OPTION ON POINT NUCLIDE DENSITY EDITS (EXPOSURE)     -
CD                    0- NONE                                             -
CD                    1- END OF EXPOSURE STEP                             -
CD                    2- END OF EACH EXPOSURE SUBSTEP                     -
C                                                                         -
CD     IX(75)        OPTION ON POINT NUCLIDE DENSITY EDITS (SHUTDOWN)     -
CD                    0- NONE                                             -
CD                    1- END OF SHUTDOWN STEP                             -
CD                    2- END OF EACH SHUTDOWN SUBSTEP                     -
C                                                                         -
CD     IX(76)        OPTION TO EDIT INITIAL POINT SPECIFIC REACTION       -
CD                    RATES                                               -
CD                    0- NO                                               -
CD                    1- YES                                              -
C                                                                         -
CD     IX(77)        OPTION TO EDIT INITIAL POINT SPECIFIC REACTION       -
CD                    RATE FOR FISSION IN YIELD DATA ENERGY RANGES        -
CD                    0- NO                                               -
CD                    1- YES                                              -
C                                                                         -
CD     IX(78)        OPTION TO EDIT INITIAL POINT NUCLIDE DENSITIES       -
CD                    0- NO                                               -
CD                    1- YES                                              -
C                                                                         -
```

(CONT)

```
CD     IX(79)          DEBUG EDIT OPTION FOR POINT CALCULATION                -
CD                      (IN ADDITION TO THOSE REQUESTED WITH IX(3))           -
CD                      0- NONE                                               -
CD                      1- MINIMAL EDITS                                      -
CD                      2- PLUS FLUX INFORMATION                              -
CD                      3- PLUS VOLUME INFORMATION                            -
C                                                                             -
CN                      2,3 MAY INCREASE STORAGE REQUIREMENTS FOR             -
CN                          IX(73) .EQ. 1                                     -
C                                                                             -
CD     IX(80)          RESERVED                                               -
C                                                                             -
CD     IX(81)          RESERVED                                               -
C                                                                             -
CD     IX(82)          RESERVED                                               -
C                                                                             -
CD     IX(83)          RESERVED                                               -
C                                                                             -
CD     IX(84-93)       UP TO 10 ZONE NUMBERS SPECIFYING THE LOCATIONS WHERE-
CD                      THE POINT CALCULATION IS TO BE DONE                   -
CD                      (IF IX(73) .EQ. 1)                                    -
CD                      IF THERE ARE LESS THAN 10 ENTRIES , THE FIRST 0       -
CD                      TERMINATES THE LIST OF ZONE NUMBERS                   -
C                                                                             -
CD     IX(94-100)      RESERVED                                               -
C                                                                             -
C-----------------------------------------------------------------------------
```

(CONT)

SPECIFICATIONS FOR PERINS RECORD IN INTERFACE FILE CONTRL

```
C-----------------------------------------------------------------------
CR          PERTURBATION MODULE INSTRUCTIONS                           -
C                                                                      -
CL    PERINS, (XX(I),I=1,100), (IX(I),I=1,100)                         -
C                                                                      -
CW          101*MULT + 100                                             -
C                                                                      -
CD    PERINS        PERTURBATION MODULE DATA IDENTIFIER (6HPERINS)     -
CD                                                                     -
CC    NOTE- UNDEFINED DATA ARE RESERVED FOR FUTURE USE.                -
CC    NOTE- THE VALUE OF ZERO IS A DEFAULT MEANING THAT THE OPTION TO  -
CC          PERFORM THE TASK IS NOT EXERCISED.                         -
CC    NOTE- THE INTERFACE FILES -GRUPXS- -GEODST- -NDXSRF- -ZNATDN-    -
CC          -RTFLUX- AND -ATFLUX- ARE NEEDED.                          -
CC          IF THE FILE -DLAYXS- EXISTS, INFORMATION ABOUT THE DELAYED -
CC          NEUTRON BEHAVIOR IS CALCULATED IN ADDITION TO THE          -
CC          OTHER PERTURBATION CALCULATIONS.                           -
C                                                                      -
C                                                                      -
CD    XX( 1) - REFERENCE TEMPERATURE T1, DEGREES C (SEE IX(7) BELOW).  -
C                                                                      -
CD    XX( 2) - CHANGED TEMPERATURE T2, DEGREES C.                      -
CD    XX( 3) - TEMPERATURE CORRELATING PARAMETER 'ALFA'                -
C                                                                      -
CD    XX( 4)                                                           -
CD    XX( 5)                                                           -
CD    XX( 6)                                                           -
CD    XX(7) - 'ALPHA' FOR THE DELAYED NEUTRON SOURCE - DEFAULT -0.05.  -
CD    XX(8) - 'ALPHA' FOR THE DELAYED NEUTRON SOURCE - DEFAULT +0.05.  -
CD    XX( 9)                                                           -
CD    XX(10)                                                           -
CD    XX(11)                                                           -
CD    XX(12)                                                           -
C                                                                      -
CD    XX(13) - CONSTANT BUCKLING, OVERRIDES DATA ON GEODST.            -
C                                                                      -
CD    XX(14)                                                           -
CD    XX(15)                                                           -
CD    XX(16)                                                           -
CD    XX(17)                                                           -
CD    XX(18)                                                           -
CD    XX(19)                                                           -
CD    XX(20)                                                           -
CD    XX(21)                                                           -
CD    XX(22)                                                           -
CD    XX(23)                                                           -
CD    XX(24)                                                           -
C                                                                      -
CD    XX(25) - FRACTION CHANGE IN MACRO. CROSS SECTIONS FOR IX(2)=1.   -
C                                                                      -
```

(CONT)

```
CC     THE FOLLOWING TABLE SHOWS THE INTERFACE FILES REQUIRED FOR        -
CC     OPTIONS IX(1) AND IX(2), AND THE FILE VERSIONS USED TO OBTAIN THE -
CC     PERTURBATION (DELTA MACRO = SIGB-SIGA). ADDITIONAL FILES ARE      -
CC     ALSO REQUIRED.                                                    -
C                                                                        -
CC            IX(1) -|   -1    |     0     |     1     |     2     |     3    | -
CC        IX(2)      |          |           |           |           |          | -
CC                 -------+---------+---------+---------+---------+---------| -
CC                        |         |N1,N2,S1,|         |         |         | -
CC          0             | EXCLUDED|S2,X     |N1,N2,S,X|N,S1,S2,X|  N,S,X  | -
CC                        |         |         |         |         |         | -
CC                 -------+---------+---------+---------+---------+---------| -
CC                 SIGA   |  N,S,X  | N1,S1,X | N1,S,X  | N,S1,X  |  N,S,X  | -
CC          1             |         |         |         |         |         | -
CC                        |         |  N2,S2  |   N2    |   S2    |         | -
CC                 -------+---------+---------+---------+---------+---------| -
CC                 SIGA   | N1,S,X  | N1,S1,X | N1,S,X  | N1,S1,X | N1,S,X  | -
CC          2             |         |         |         |         |         | -
CC                 SIGB   | N2,S,X  | N2,S2,X | N2,S,X  | N2,S2,X | N2,S,X  | -
CC                 -------+---------+---------+---------+---------+---------| -
CC                 SIGA   | N,S1,X  | N1,S1,X | N1,S1,X | N,S1,X  | N,S1,X  | -
CC          3             |         |         |         |         |         | -
CC                 SIGB   | N,S2,X  | N2,S2,X | N2,S2,X | N,S2,X  | N,S2,X  | -
CC                 -------+---------+---------+---------+---------+---------| -
CC                 SIGA   | N1,S1,X | N1,S1,X | N1,S1,X | N1,S1,X | N1,S1,X | -
CC          4             |         |         |         |         |         | -
CC                 SIGB   | N2,S2,X | N2,S2,X | N2,S2,X | N2,S2,X | N2,S2,X | -
CC                 -------+---------+---------+---------+---------+---------| -
CC                 SIGA   | N,S,X1  |N1,S1,X1 | N1,S,X1 | N,S1,X1 | N,S,X1  | -
CC          5             |         |         |         |         |         | -
CC                 SIGB   | N,S,X2  |N2,S2,X2 | N2,S,X2 | N,S2,X2 | N,S,X2  | -
CC                 -------+---------+---------+---------+---------+---------| -
CC                 SIGA   | N1,S,X1 |N1,S1,X1 | N1,S,X1 |N1,S1,X1 | N1,S,X1 | -
CC          6             |         |         |         |         |         | -
CC                 SIGB   | N2,S,X2 |N2,S2,X2 | N2,S,X2 |N2,S2,X2 | N2,S,X2 | -
CC                 -------+---------+---------+---------+---------+---------| -
CC                 SIGA   |N1,S1,X1 |N1,S1,X1 |N1,S1,X1 |N1,S1,X1 |N1,S1,X1 | -
CC          7             |         |         |         |         |         | -
CC                 SIGB   |N2,S2,X2 |N2,S2,X2 |N2,S2,X2 |N2,S2,X2 |N2,S2,X2 | -
CC                 ------------------------------------------------------- -
C                                                                        -
CC     WHERE -- N1 = NEXT-TO-LATEST VERSION (UNPERTURBED) ZNATDN FILE.   -
CC              N2 =          LATEST VERSION (  PERTURBED) ZNATDN FILE.  -
CC              S1 = NEXT-TO-LATEST VERSION (UNPERTURBED) GRUPXS FILE.   -
CC              S2 =          LATEST VERSION (  PERTURBED) GRUPXS FILE.  -
CC              X1 = NEXT-TO-LATEST VERSION (UNPERTURBED) NDXSRF FILE.   -
CC              X2 =          LATEST VERSION (  PERTURBED) NDXSRF FILE.  -
CC              N, S, X = LATEST (MAY BE ONLY ONE) VERSION OF ZNATDN,    -
CC              GRUPXS, AND NDXSRF FILES.                                -
C                                                                        -
```

(CONT)

```
CC     IF FILES DO NOT EXIST FOR IX(1) OPTIONS 0, 1, OR 2, IX(1) IS      -
CC     DEFAULTED TO 3 AND THE ATTEMPT IS MADE TO PROCEED USING A SINGLE  -
CC     EXISTING FILE AS NEXT-TO-LATEST VERSION UNLESS IX(6) GT 0.        -
CC     NOTE --  DIFFERENT GRUPXS FILES MUST HAVE THE SAME GROUP STRUCTURE-
CC              THE FILES GEODST, RIFLUX, AND ATFLUX MUST HAVE THE SAME  -
CC              NUMBER OF GROUPS AND THE SAME MESH.                      -
CC              THE FILES GEODST AND NDXSRF MUST HAVE THE SAME NUMBER    -
CC              OF ZONES.                                                -
CC              THE FILES GRUPXS AND NDXSRF MUST HAVE THE SAME TOTAL     -
CC              NUMBER OF NUCLIDES.                                      -
CC              THE FILES ZNATDN AND NDXSRF MUST HAVE THE SAME MAXIMUM   -
CC              NUMBER OF NUCLIDES IN ANY SET, AND THE SAME NUMBER OF    -
CC              ZONES PLUS SUB-ZONES.                                    -
C                                                                        -
C                                                                        -
C                                                                        -
CD     IX( 1) - OPTIONS FOR CALCULATING BASIC INTEGRALS.                 -
CD            -1 - NO CALCULATION (PERTUB ALREADY EXISTS).               -
CD             0 - CALCULATE INTEGRALS USING FILES N1, S1.               -
CD             1 - CALCULATE INTEGRALS USING FILES N1, S2 (USUALLY NOT   -
CD                 DONE).                                                -
CD             2 - CALCULATE INTEGRALS USING FILES N2, S1 (USUALLY NOT   -
CD                 DONE).                                                -
CD             3 - CALCULATE INTEGRALS USING FILES N2, S2 (OR N, S).     -
C                                                                        -
CD     IX( 2) - OPTIONS FOR CALCULATING (DELTA K)/K = (PERTURBATION      -
CD              INTEGRALS)*(SIGB-SIGA).                                  -
CD             0 - ONLY CALCULATE BASIC INTEGRALS.                       -
CD             1 - CHANGE MACROSCOPIC CROSS SECTIONS BY MULTIPLYING      -
CD                 THEM BY XX(25).                                       -
CD             2 - CHANGE ONLY DENSITIES.                                -
CD             3 - CHANGE ONLY CROSS SECTIONS.                           -
CD             4 - CHANGE BOTH DENSITIES AND CROSS SECTIONS.             -
CD             5 - CHANGE ONLY REFERENCING.                              -
CD             6 - CHANGE DENSITIES AND REFERENCING.                     -
CD             7 - CHANGE DENSITIES, CROSS SECTIONS, AND REFERENCING.    -
C                                                                        -
CD     IX( 3) - PERTUBATION CALCULATION OPTIONS FOR IX(1) GE 0.          -
CD            -1 - DO NOT CALCULATE TRANSPORT INTEGRALS.                 -
CD             0 - CALCULATE ALL INTEGRALS.                              -
CD             1 - ALSO CALCULATE RESULTS FOR 100 PERCENT CHANGE IN      -
CD                 MACROSCOPIC CROSS SECTIONS AND UNCERTAINTY            -
CD                 (SENSITIVITY) RESULTS.                                -
CD             6 - SAME AS 0 BUT NO EDITS ARE PRINTED.                   -
C                                                                        -
CD     IX( 4) - EDIT OPTIONS FOR IMPORTANCE MAPPING FOR IX(1) GE 0.      -
CD             1 - ABSORPTION CROSS SECTION SPACE POINT IMPORTANCE MAP.  -
CD             2 - ALSO PRODUCTION AND PRODUCTION-ABSORPTION SPACE       -
CD                 POINT IMPORTANCE MAPS.                                -
CD             3 - ALSO 1/V SPACE POINT IMPORTANCE MAP.                  -
C                                                                        -
```

(CONT)

```
CD     IX( 5) - OPTION TO WRITE INTERFACE FILE PERTUB FOR IX(1) GE 0.    -
CD              0 - REPLACE OLD FILE, IF NONE EXISTS SET UP NEW ONE.     -
CD              1 - WRITE NEW FILE.                                      -
CD     IX( 6) - OPTION TO DEFAULT FILES FOR IX(1) = 0, 1, OR 2.         -
CD              0 - DEFAULT IX(1) TO 3 IF FILES FOR IX(1) = 0, 1, OR 2  -
CD                  DO NOT EXIST.                                        -
CD              1 - STOP CALCULATION IF FILES DO NOT EXIST.              -
C                                                                        -
CD     IX( 7) - OPTIONS TO CONSIDER A CORRELATION OF MACROSCOPIC        -
CD              CROSS SECTIONS ON ZONE TEMPERATURE IF GT 0, REQUIRES     -
CD              ZONE TEMPERATURE DATA IN INTERFACE FILE(S).              -
CD              0 - NO TEMPERATURE DEPENDENCE, SEE DISCUSSION ABOUT      -
CD                  OPTIONS ABOVE.                                       -
CD              1 - SIGA = SIGAT1, AND                                   -
CD                  SIGB = SIGBT1+F1*(SIGBT2-SIGBT1).                    -
CD              2 - SIGA = SIGAT1+F1*(SIGAT2-SIGAT1), AND                -
CD                  SIGB = SIGBT1+F1*(SIGBT2-SIGBT1).                    -
CD              3 - SIGA = SIGAT1+F1*(SIGAT2-SIGAT1), AND                -
CD                  SIGB = SIGBT1+F2*(SIGBT2-SIGBT1).                    -
C                                                                        -
CC     WHERE -- SIGA = STATE A MACROS.                                   -
CC              SIGB = STATE B MACROS.                                   -
CC              SIGAT1 = MACROS CALCULATED USING FILE N1 (OR N) AND      -
CC                       FILE S1 (REFERENCE TEMPERATURE) OR X1.          -
CC              SIGAT2 = MACROS CALCULATED USING FILE N1 (OR N) AND      -
CC                       FILE S2 (CHANGED TEMPERATURE) OR X2.            -
CC              SIGBT1 = MACROS CALCULATED USING FILE N2 (OR N) AND      -
CC                       FILE S1 (REFERENCE TEMPERATURE) OR X1.          -
CC              SIGBT2 = MACROS CALCULATED USING FILE N2 (OR N) AND      -
CC                       FILE S2 (CHANGED TEMPERATURE) OR X2.            -
CC              A1 = (Z1-T1)/(T2-T1).                                    -
CC              A2 = (Z2-T1)/(T2-T1).                                    -
CC              T1 = REFERENCE TEMPERATURE (XX(1) ABOVE).                -
CC              T2 = CHANGED TEMPERATURE (XX(2) ABOVE).                  -
CC              Z1 = ZONE DEPENDENT REFERENCE TEMPERATURES               -
CC                   (FROM FILE ZNTEMP).                                 -
CC              Z2 = ZONE DEPENDENT CHANGED TEMPERATURES                 -
CC                   (FROM FILE ZNTEMP).                                 -
CC              IF ALFA= 0, F1=A1,                                       -
CC                 OTHERWISE F1=TAN-1(ALFA*A1)/TAN-1(ALFA)               -
CC              IF ALFA= 0, F2=A2,                                       -
CC                 OTHERWISE F2=TAN-1(ALFA*A2)/TAN-1(ALFA)               -
C                                                                        -
CC     NOTE --  FOR IX(7) = 0, ALL IX(1) AND IX(2) OPTIONS APPLY.        -
CC              FOR IX(7) GT 0, IX(1) OPTIONS -1, 0, OR 3 APPLY, AND     -
CC              IX(2) OPTIONS 3, 4, 5, 6, AND 7 APPLY.                   -
C                                                                        -
```

(CONT)

```
CD     IX( 8) - OPTION TO CALCULATE IMPORTANCE BY UNIQUE (USER) NUCLIDE  -
CD              NAME IN EACH ZONE.                                       -
CD              0 - NO.                                                  -
CD              1 - CALCULATE (DELTA K)/(K*DELTA N) FOR NUCLIDES HAVING  -
CD              CLASSIFICATION 1, 2, AND 3 (ACTINIDES). DEFAULT TO ALL   -
CD              NUCLIDES IF NO 1, 2, OR 3 CLASSIFICATION.                -
CD              2 - ALSO CALCULATE (N*DELTA K)/(K*DELTA N).              -
CD              3 - SAME AS 1 BUT FOR ALL NUCLIDES.                      -
CD              4 - SAME AS 2 BUT FOR ALL NUCLIDES.                      -
CC     NOTE --  THE ZNATDN, GRUPXS, AND NDXSRF FILES USED FOR THIS      -
CC              OPTION WILL BE THE ONES LAST USED AS REQURIED BY OPTIONS -
CC              IX(1), IX(2), AND IX(7).                                 -
C                                                                        -
CD     IX( 9)                                                            -
C                                                                        -
CD     IX(10) - OPTION TO USE LOCAL I/O ROUTINES IF GT 0.                -
C                                                                        -
CD     IX(11) - OPTION TO PREVENT FILES FROM DEFAULTING TO CORE IF GT 0. -
C                                                                        -
CD     IX(12)                                                            -
C                                                                        -
CD     IX(13) - 0 OR 1 = NORMAL RTFLUX. 2 = FIXED SOURCE RTFLUX.         -
C                                                                        -
CD     IX(14) - 0 OR 1 = NORMAL ATFLUX. 2 = FIXED SOURCE ATFLUX.         -
CD     IX(15) - EDIT MACROSCOPIC CROSS SECTIONS IF GT 0.                 -
C                                                                        -
CD     IX(16) - EDIT MACROSCOPIC SCATTERING CROSS SECTIONS IF GT 0.      -
C                                                                        -
CD     IX(17)                                                            -
C                                                                        -
CD     IX(18) - FISSION SOURCE DISTRIBUTION FUNCTION OPTION.             -
CD              0 - SET VALUES TO BE USED (SAME IN EACH ZONE).           -
CD              1 - REGION DEPENDENT VALUES TO BE USED.                  -
C                                                                        -
CD     IX(19) - FISSION SOURCE DISTRIBUTION NORMALIZATION OPTION.        -
CD              0 - LEAVE UNNORMALIZED.                                  -
CD              1 - NORMALIZE EACH SET TO SUM TO UNITY.                  -
C                                                                        -
CD     IX(20) - OPTION TO FORCE DATA HANDLING MODE.                      -
CD              1 - 1-ROW STORED MODE.                                   -
CD              2 - SPACE STORED MODE.                                   -
CD              3 - PLANE STORED MODE.                                   -
C                                                                        -
CD     IX(21) - ORDER IN THE CROSS SECTION FILE OF THE DIRECTION         -
CD              DEPENDENT TRANSPORT CROSS SECTION TO BE USED FOR THE     -
CD              FIRST COORDINATE DIRECTION (USUALLY 0).                  -
C                                                                        -
CD     IX(22) - DITTO, SECOND COORDINATE DIRECTION.                      -
C                                                                        -
CD     IX(23) - DITTO, THIRD COORDINATE DIRECTION.                       -
```

(CONT)

```
C                                                                       -
CD     IX(24) - FORCE DATA TRANSFER IN INITIALIZATION (FOR TESTING ONLY).-
C                                                                       -
CD     IX(25) - DEBUG OUTPUT OPTION.                                    -
CD              0 - NO DEBUG EDIT.                                      -
CD              1 - EDIT NUCLIDE IMPORTANCE (SEE IX(8)) BY REACTION     -
CD                  TYPE (SIGA, NUSIGF, SIGTR, DB**2, SIGR, AND SIGS)   -
CD                  AND FOR EACH ZONE CLASS. ALSO EDIT CONTENTS OF I/O  -
CD                  ISIGMA.                                             -
CD              2 - PLUS EDIT CONTENTS OF I/O ISIGS AND OTHER SIGMAS.   -
CD              3 - PLUS EDIT CONTENTS OF I/O 23 AND/OR 40.             -
C                                                                       -
C-----------------------------------------------------------------------
```

(CONT)

SPECIFICATIONS FOR REFINS RECORD IN INTERFACE FILE CONTRL

```
C-----------------------------------------------------------------------
CR                FUEL MANAGEMENT INFORMATION                          -
C                                                                      -
CL       REFINS,(XX(I),I=1,100),(IX(I),I=1,100)                        -
C                                                                      -
CW                101*MULT + 100                                       -
C                                                                      -
CD       REFINS            REQUIRED INFO IDENTIFIER = 'REFINS' (A6)   -
CD       XX(1)             *** RESERVED ***                           -
CD       XX(2)             FRACTION OF THE WHOLE REACTOR TREATED      -
CD                         (DEFAULT VALUE = 1.0)                      -
CD       XX(3)             ELECTRICAL POWER LEVEL OF THE REACTOR (WATTS) -
CD                         (DEFAULT VALUE = 0.0)                      -
CD       XX(4)             THERMAL CONVERSION FACTOR FOR THE REACTOR  -
CD                         (ELECTRICAL POWER/THERMAL POWER)           -
CD       XX(5)             RATE OF FUEL CONSUMPTION PER UNIT THERMAL  -
CD                         ENERGY GENERATED (KG FISSILE/WATT-DAY)     -
CD                         (DEFAULT VALUE=1.3E-9 KGM/WATT-DAY ASSUMING -
CD                         3.1E-11 WATTS/FISSION)                     -
CD       XX(7)             REFERENCE FUEL COST DISCOUNT RATE          -
CD                         (DEFAULT VALUE = 0.10)                     -
CD       XX(8)             SECONDARY FUEL COST DISCOUNT RATE FOR      -
CD                         AUXILIARY CALCULATIONS                     -
CD                         (DEFAULT VALUE = 0.15)                     -
CD       XX(20)            PROGRAMMABLE SIGNIFICANCE VALUE.           -
CD                         1. THIS VALUE IS THE FRACTIONAL VOLUME     -
CD                         MISMATCH TO ALLOW BEFORE REPORTING ERRORS  -
CD                         FOR FUEL MOVEMENT.  FUEL MOVEMENT IS ALLOWED -
CD                         FROM ZONE 1 TO ZONE 2 IF, FOR VOLUMES      -
CD                         V1 AND V2, ABS((V1-V2)/V1) .LE.  MAXIMUM   -
CD                         MISMATCH.                                  -
CD                         2. FOR ANY RECYCLE PROCESSING (TRANSFER TO -
CD                         SUPPLY FROM DISCHARGE, FABRICATION AND     -
CD                         PROCESSING, OR TRANSITIONS), IF THE RELATIVE -
CD                         MASS BEFORE AND AFTER PROCESSING IS LESS   -
CD                         THAN THE SIGNIFICANCE VALUE, THE MASS IS   -
CD                         FORCED TO 0.                               -
CD                         (DEFAULT VALUE= 1.0E-04)                   -
C                                                                      -
CD       IX(1)             PRIMARY TASK ASSIGNMENT OPTIONS            -
CD                         -1  INITIALIZATION OPTION TO START THE MASS -
CD                             BALANCE HISTORY. NO REFUELING/FUEL     -
CD                             MOVEMENT IS PERFORMED; THE MASS BALANCE -
CD                             HISTORY  FILE IS CREATED FOR THE INITIAL -
CD                             REACTOR INVENTORY.  IF INITIALIZATION IS -
CD                             NOT THE FIRST OPTION USED, THE MASS    -
CD                             BALANCE HISTORY FILE IS CREATED BUT MASS -
CD                             BALANCES MAY NOT BE COMPLETE.          -
CD                          0  PERFORM NORMAL TASKS (NORMAL FUEL      -
CD                             MOVEMENT WITH MASS BALANCE ACCOUNTING  -
CD                             OR FUEL RELOCATION) (DEFAULT)          -
```

(CONT)

```
CD                          1  REEVALUATE MASS BALANCE WITH OTHER          -
CD                             TASKS AS IN A NEUTRONICS CONCENTRATION      -
CD                             ADJUSTMENT. THIS OPTION IS NOT AVAILABLE.   -
CD                          2  HISTORY END; OUTPUT MASS BALANCE            -
CD       IX(3)            DEBUG EDIT OPTION FOR PROGRAM MAINTENANCE        -
CD                          0  NO SPECIAL EDITS (DEFAULT)                  -
CD                          1  FIRST LEVEL EDITS                           -
CD                          2  ELABORATE DEBUG EDIT                        -
CD       IX(4)            ZNATDN UPDATE OPTION                             -
CD                          0  REWRITE NEW DATA ON EXISTING FILE (DEFAULT) -
CD                          1  GENERATE A NEW FILE FOR EACH CYCLE          -
CD       IX(5)            ZONE ATOM DENSITY (ZNATDN) BACKUP FILE OPTION    -
CD                          0  WRITE BACKUP FILE FNATDN (DEFAULT)          -
CD                          1  DO NOT WRITE BACKUP FILE FNATDN            -
CD                         -1  RECOVER ZONE ATOM DENSITY DATA FROM BACKUP  -
CD                             FILE FNATDN RATHER THAN FROM FILE ZNATDN    -
CD       IX(6)            CONTINUOUS FUELING FILE OPTION                   -
CD                          0  READ ZONE CONCENTRATIONS FROM FILE ZNATDN   -
CD                             AND UPDATE ZONE CONCENTRATIONS IN FILE      -
CD                             ZNATDN (DEFAULT)                            -
CD                          1  READ ZONE CONCENTRATIONS FROM FILE QNATDN   -
CD                             AND UPDATE ZONE CONCENTRATIONS IN FILE      -
CD                             ZNATDN                                      -
CD       IX(7)            MASS BALANCE FILE (MASBAL) DELETE OPTION         -
CD                          0  RETAIN CURRENT VERSION OF MASBAL FILE ONLY; -
CD                             DELETE ALL OLDER VERSIONS (DEFAULT)         -
CD                          1  RETAIN CURRENT VERSION OF MASBAL FILE AND   -
CD                             PREVIOUS VERSION ONLY; DELETE ALL OLDER     -
CD                             VERSIONS                                    -
C                                                                           -
CN                NOTE: THIS OPTION IS NOT USED IF FUEL RELOCATION IS      -
CN                      THE ONLY TASK PERFORMED SINCE NO MASS BALANCE      -
CN                      ACCOUNTING IS PERFORMED.                           -
C                                                                           -
CD       IX(11)           FUEL COST CALCULATION OPTION                     -
CD                          0  NO FUEL COST CALCULATIONS                   -
CD                          1  OBTAIN LEVELIZED COST FOR ENTIRE HISTORY    -
CD                             WITH COST BREAKDOWN INTO COMPONENTS AT      -
CD                             END OF HISTORY ONLY.                        -
CD                             (FABRICATION,PROCESSING,SHIPPING,ETC.)      -
CD                          2  OBTAIN LEVELIZED COST FOR HISTORY WITH      -
CD                             BREAKDOWN, COST BETWEEN SUCCESSIVE FUELINGS -
CD                             AND RUNNING LEVELIZED COST. (EACH CYCLE IS  -
CD                             TREATED AS A COMPLETE HISTORY FOR REPORTING -
CD                             PURPOSES)                                   -
CD       IX(12)           PLANT LIFE OPTION                                -
CD                          <0 LIFE IN YEARS ESTIMATED PRECISELY (USE THE  -
CD                             HISTORY TO THE TIME ESTIMATED, REGARDLESS   -
CD                             OF ITS POINT IN THE CYCLE.)                 -
```

(CONT)

```
CD                          0 USE AVAILIABLE HISTORY                        -
CD                         >0 LIFE IN YEARS ROUNDED TO THE NEAREST FUELIN -
CD                            TIME (TRUNCATE OR EXTRAPOLATE THE DATA AS    -
CD                            NEEDED)                                      -
CD      IX(13)            LOAD FACTOR VARIATION                            -
CD                         0  FIXED LOAD FACTOR                            -
CD                         1  EXPONENTIAL LOAD FACTOR DECREASE             -
CD      IX(16)            ORDER NUMBER OF FUEL MANAGEMENT SPECIFICATION    -
CD                        SET IN REFUEL (RECORDS 7D AND 8D) APPLIED ON     -
CD                        REQUEST                                          -
CD      IX(17)            ORDER NUMBER OF FUEL MANAGEMENT SPECIFICATION    -
CD                        SET IN REFUEL (RECORDS 7D AND 8D) APPLIED ON     -
CD                        REQUEST                                          -
CD      IX(18)            ORDER NUMBER OF FUEL MANAGEMENT SPECIFICATION    -
CD                        SET IN REFUEL (RECORDS 7D AND 8D) APPLIED ON     -
CD                        REQUEST                                          -
CD      IX(19)            ORDER NUMBER OF FUEL MANAGEMENT SPECIFICATION    -
CD                        SET IN REFUEL (RECORDS 7D AND 8D) APPLIED ON     -
CD                        REQUEST                                          -
C                                                                          -
CN                NOTE: THE FUEL MANAGEMENT SPECIFICATIONS GIVEN IN        -
CN                      IX(16)-IX(19) ARE APPLIED ON REQUEST (I.E. IF      -
CN                      .GT. 0) IN THE ORDER PRESENTED.                    -
C                                                                          -
C-------------------------------------------------------------------------
```

(CONT)

SPECIFICATIONS FOR PBLINS RECORD IN INTERFACE FILE CONTRL

```
C-----------------------------------------------------------------------
CR        PEBBLE THERMAL HYDRAULICS MODULE INSTRUCTIONS, FILE 'CONTRL'   -
C                                                                        -
CN     (THERMAL PEBBLE BED IN RZ OR Z GEOMETRY)                          -
C                                                                        -
CN     DATE OF THESE USE INSTRUCTIONS, OCTOBER, 1980  --D VONDY, ORNL    -
C                                                                        -
CL     PBLINS, (XX(I),I=1,100),(IX(I),I=1,100)                           -
C                                                                        -
CW        101*MULT + 100                                                 -
C                                                                        -
CD     PBLINS   PEBBLE THERMAL HYDRAULICS DATA IDENTIFIER (6HPBLINS)     -
C                                                                        -
CN*       A * IS PLACED IN COLUMN 3 TO INDICATE THAT THAT DATA MUST      -
CN*       NORMALLY BE SUPPLIED -- HEED NOTES AND CHECK OLD DECKS         -
CNX       FLAG TO INDICATE THAT DATA IS USUALLY REQUIRED FOR FLOW THRU   -
CNX       HOLES IN A SOLID MATRIX                                        -
CD                                                                       -
CD     XX(1)     VOID FRACTION IF TO BE CONSTANT                         -
CD               (DEFAULT VALUE 0.39 LACKING OTHER DATA - THE ZONE       -
CD               FRACTIONS MAY BE USED AS SOLID FRACTIONS IF .02 <X< .98) -
CDX             SPECIAL CONSIDERATIONS WITH FLOW THROUGH HOLES           -
CD*    XX(2)     INLET TEMPERATURE OF COOLANT, DEG C (DEFAULT 350.35)    -
CD*    XX(3)     INLET PRESSURE OF COOLANT, ATM (DEFAULT 40)             -
CD     XX(4)     COOLANT MASS FLOW RATE FOR REACTOR, KG/SEC,             -
CD               NORMALLY CALCULATED GIVEN INLET AND OUTLET TEMPS        -
CD*    XX(5)     PEBBLE DIAMETER OR COOLANT HOLE DIAMETER, CM            -
CDN              THIS IS THE COOLANT FLOW CHARACTERISTIC DIAMETER        -
CD     XX(6)     REFERENCE HIGH ENERGY NEUTRON FLUX FLUENCE, N/CM**2     -
CD               APPLIED ONLY IF IX(3) < 0                               -
CD     XX(7)     RECOVERABLE ENERGY FRACTION (DEFAULT 1.0)               -
CD     XX(8)     REACTOR POWER LEVEL DESIRED, W-TH, USUALLY NOT SET      -
CDX    XX(9)     EFFECTIVE DIAMETER OF UNIT CELL ABOUT FUEL (INSIDE      -
CDX              A SHELL OF MATERIAL OUTSIDE, LOCATION OF COOLANT FLOW),CM-
CDX              SET EQUAL TO XX(5) IF 0                                 -
CD*    XX(10)    RADIUS OF THE ZONE PEBBLE MEAT OR HEAVY METAL CORE      -
CD               (DEFAULT HALF OF PEBBLE DIAMETER - NO SHELL)            -
CD*    XX(11)    RADIUS OF THE SUBZONE PEBBLE MEAT OR HEAVY METAL CORE   -
CD               (DEFAULT HALF OF PEBBLE DIAMETER - NO SHELL)            -
CD     XX(12)    OUTLET TEMPERATURE OF COOLANT, DEG C (DEFAULT 850.35 IF -
CD                  XX(4)=0)                                             -
CD               (NOT USED IF XX(4) IS NON-ZERO)                         -
CD     XX(13)    FLUENCE MULTIPLIER ON DATA AVAILABLE (DEFAULT 1.0)      -
CD     XX(14)    RELATIVE PEBBLE GRAPHITE THERMAL CONDUCTIVITY, A        -
CD               MULTIPLIER ON BUILT IN DATA (DEFAULT 1.0)               -
CD     XX(15)    ITERATION CONVERGENCE CRITERIA, MAXIMUM RELATIVE ITERATE -
CD               CHANGE FOR TERMINATION (DEFAULT 0.00005)                -
CN          THE OPTION ON BLOCKED FLOW AREA FOLLOWS, USE WITH CAUTION    -
CD     XX(16)    INSIDE RADIUS (MUST BE ZERO TO BE REALISTIC)            -
CD     XX(17)    OUTSIDE RADIUS OF BLOCKAGE, CM                          -
```

(CONT)

```
CD     XX(18)    DISTANCE BLOCKAGE STARTS FROM COOLANT INLET, CM          -
CD     XX(19)    HEIGHT OF BLOCKAGE, CM                                   -
CD     XX(20)    SOLID BLOCKAGE FRACTION (DEFAULT 0.85 -- USE LARGE VALUES-
CD                  WITH DISCRETION)                                     -
CN          THE OPTION ON DEFINING CORE BOUNDARIES FOLLOWS              -
CN          WITHOUT DATA, THE NON-ZERO POWER DENSITY EXTREEMS DEFINE CORE-
CD     XX(21)    INSIDE RADIUS (IF NON-ZERO WILL REQUIRE ADDING THE       -
CD               ANNULAR INTERNAL SOLID BOUNDARY PLANNED)                 -
CD     XX(22)    OUTSIDE RADIUS OF CORE, CM                               -
CD     XX(23)    DISTANCE FROM START OF GEOMETRY, TYPICALLY FROM TOP, CM  -
CD     XX(24)    HEIGHT OF CORE, CM                                       -
C                                                                         -
CN          ADDITIONAL OPTIONS AND OVERRIDE DATA VALUES FOLLOW          -
CD     XX(25)    LIMITING PROCESSOR TIME, SECONDS (DEFAULT 120)           -
C                                                                         -
CN     INITIAL ACCELERATION COEFFICIENTS ARE MADE PROBLEM DEPENDENT      -
CN     AND MAY BE ALTERED DURING THE PROBLEM SOLUTION IF DEEMED TO BE    -
CN     DESIRABLE BY THE AUTOMATED MONITORING PROCEDURES                  -
C                                                                         -
CN     IT IS QUITE POSSIBLE THAT THE ROUGH ITERATIVE BEHAVIOR EARLY IN   -
CN     THE HISTORY WILL CAUSE INITIAL COEFFICIENTS TO BE DECREASED       -
CN     WHICH WOULD REQUIRE INPUT OF SOMEWHAT LARGER VALUES THAN THOSE    -
CN     EXPECTED TO BE OPTIMUM ASYMPTOTICALLY                             -
C                                                                         -
CD     XX(26)    STREAM FUNCTION OVERRELAXATION COEFFICIENT               -
CD     XX(27)    BULK TEMPERATURE, DITTO, SEE FOLLOWING NOTE              -
CN         THIS COEFFICIENT MAY BE OF UTMOST IMPORTANCE, AND AN EFFECTIVE-
CN         VALUE SHOULD BE SUPPLIED IF KNOWN (TEST PROVEN FOR AT LEAST A -
CN         SIMILIAR PROBLEM).  TYPICALLY THE VALUE IS MUCH LESS THAN 1.  -
CD     XX(28)    SURFACE TEMPERATURE, DITTO                               -
CN         IT IS DIFFICULT TO SEE HOW A VALUE OTHER THAN UNITY WOULD BE  -
CN         EFFECTIVE HERE                                                 -
CD     XX(29)    PRESSURE, DITTO                                          -
CD     XX(30)    SPECIFIC HEAT VALUE (5193.)                              -
C                                                                         -
CN          DATA FOR A SECOND AND THIRD CALCULATION FOLLOW (3 DATUM EACH)-
CD     XX(31)    NEW INLET COOLANT TEMPERATURE, DEG C (DEFAULT XX(2))     -
CD     XX(32)    NEW OUTLET COOLANT TEMPERATURE, DEG C (DEFAULT XX(12))   -
CD     XX(33)    RELATIVE POWER LEVEL FOR SUBSEQUENT CALCULATION          -
CD     XX(34)    NEW INLET COOLANT TEMPERATURE, DEG C (DEFAULT XX(31))    -
CD     XX(35)    NEW OUTLET COOLANT TEMPERATURE, DEG C (DEFAULT XX(32))   -
CD     XX(36)    RELATIVE POWER LEVEL FOR THIRD CASE (DEFAULT (XX(33))    -
C                                  (RELATIVE TO THAT FOR THE SECOND CASE)-
C                                                                         -
CD     XX(37)    MOLECULAR WEIGHT (4.0026)                                -
CD     XX(38)    AZERO (0.0216)                                           -
CD     XX(39)    AGAS (0.49849)                                           -
CD     XX(40)    B  (0.)                                                  -
CD     XX(41)    C (40.)                                                  -
CD     XX(42)    RGAS (0.08206)                                           -
```

(CONT)

```
CD     XX(43)    BZERO (0.014)                                          -
CD     XX(44)    PCONA (17.)                                            -
CD     XX(45)    PCONB (20.5)                                           -
CD     XX(46)    PCONC (-15.37)                                         -
CD     XX(47)    BETAK (0.95)                                           -
CD     XX(48)    GAMMAK (2./3. SPHERE, PI/4. CYLINDER)                  -
CD     XX(49)    FC (3.674E-07)                                         -
CD     XX(50)    FD (0.7)                                               -
CD     XX(51)    FE (0.71)                                              -
CD     XX(52)    FF (2.682E-03)                                         -
CD     XX(53)    FG (0.0011379)                                         -
CD     XX(54)    FH (1.4389E-4)                                         -
CD     XX(55)    AFRIC (4.1666)  HYDRAULIC EQUATION, FIRST COEFFICIENT  -
CDX                NOT USED IF IX(13) > 0                               -
CD     XX(56)    BFRIC (.1754)                                          -
CDX                                   (1.0  IF IX(13) > 0)              -
CD     XX(57)    P1 (2.2679E-07)                                        -
CD     XX(58)    P2 (3.)                                                -
CD     XX(59)    P3 (.1293)                                             -
CD     XX(60)    P4 (.3292)                                             -
CD     XX(61)    P5 (.277)                                              -
CD     XX(62)    P6 (.2426)                                             -
CD     XX(63)    P7  (.26)                                              -
CD     XX(64)    P8 (.476)                                              -
CD     XX(65)    P9 (.41)                                               -
CD     XX(66)    P10 (1.176E-04)                                        -
CD     XX(67)    P11  (311.)                                            -
CD     XX(68)    FOR ONE-DIMENSIONAL CALCULATIONS, RADIAL PEAKING FACTOR -
CD               FOR AUXILIARY CALCULATION (DEFAULT 1.2)                -
CD     XX(69)    P13 (.005)                                             -
CD     XX(70)    P14 (2.)                                               -
C      XX(71) - XX(83)        REFERENCE THERMAL CONDUCTIVITY DATA        -
C                             USED IF XX(71) .NE. 0                      -
CN     AT NO EXPOSURE, CORRESPONDING TO TEMPERATURES (K) --              -
CN 300. 350. 400. 500. 600. 700. 800. 900. 1000. 1100. 1200. 1300. 1600.-
CN     REFERENCE POINT C(2) AT T = 350. IS 1.05 WATTS/CM-DEG DELTA T     -
CN        TO CONVERT GM-CAL TO WATT-SEC, MULTIPLY BY 4.186               -
CD     XX(84)    P15 (0.1905)                                           -
CD     XX(85)    P16  (2./3.)                                           -
CD     XX(86)    EOVR  (0.1*DP)                                         -
CD     XX(87)    EOVA  (0.5*DP)                                         -
CD     XX(88)-XX(100)  RESERVED                                         -
C                                                                        -
CD     IX(1)     OPTION ON COOLANT FLOW                                 -
CD              -1  NO GRAVITY TERM                                     -
CD               0- DOWNWARD FLOW                                       -
CD               1- UPWARD FLOW                                         -
C                                                                        -
```

(CONT)

```
CN     IT MAY BE USEFUL TO CONSIDER THAT AS THE PROBLEMS ARE DESCRIBED   -
CN     FOR THE NEUTRONICS, FLOW IS FROM THE TOP TO THE BOTTOM            -
CN     (LEFT TO RIGHT IF ONE DIMENSIONAL)                                -
CN     AND THE COOLANT FLOW MUST BE IN THIS DIRECTION, REASONABLE IT     -
CN     SEEMS FOR DOWN FLOW OF COOLANT AND PEBBLES, BUT IF THE COOLANT IS -
CN     TO FLOW UP AND THE PEBBLES DOWN, THEN THE PROBLEM MUST BE SET UP  -
CN     QUITE DIFFERENTLY (ZONE NUMBERS RUN UP INSTEAD OF DOWN)           -
C                                                                        -
CD     IX(2)     OPTION ON PRESSURE DROP AND FILM COEFFICIENT            -
CD               0- GERMAN                                               -
CD               1- US CORRELATIONS (OLD)                                -
CD     IX(3)     OPTION ON FLUENCE, <0- DONT READ DATA (SEE XX(6))       -
CD                                  0,1- CFHIST FILE, CONTIUOUS FUELING -
CN               NOTE THAT THIS FLAG MUST BE SET FOR FIXED FUEL EXPOSURE -
CD                                  2- EXPOHT FILE, FIXED FUEL EXPOSURE -
CD     IX(4)     FLUENCE SELECTION, 0,1- USE FIRST RANGE IF AVAILABLE    -
CD                                  2- USE SECOND RANGE IF AVAILABLE    -
CD                                  3- USE TOTAL IF IT IS AVAILABLE     -
CN       IF DESIRED DATA IS NOT AVAILABLE, NO DATA IS USED               -
CD     IX(5)     MEMORY AVAILABLE FOR DATA IN 1000 WORDS                 -
CD                    (DEFAULT  20000 ADDED TO RECORD 'DRVINS' CONTENT   -
CD                     WHICH IS THE NUMBER SUPPLIED TO THE CONTROL MODULE) -
CD                     UNDER VIRTUAL MEMORY, ASSUME FULL CORE CONTAINED  -
CD                     AND ALLOCATE SPACE ACCORDINGLY                    -
CD     IX(6)     THERMAL CONDUCTIVITY TREATMENT (FOR GROSS HEAT TRANSFER -
CD               ACROSS CORE), OPTIONS                                   -
CD              <0- NO SOLID PHASE HEAT TRANSFER                         -
CD               0- USE ZONE EXPOSURE DATA AND SURFACE TEMPERATURE       -
CD               1- USE SUBZONE EXPOSURE DATA AND SURFACE TEMPERATURE    -
CD               2-  DITTO, BUT VOLUME FRACTION WEIGHT INSTEAD OF AVERAGE -
CD               3- USE BUILT IN AXIAL FUNCTION                          -
CD     IX(7)     DEBUG EDIT LEVEL (0,1,2,3)                              -
CD     IX(8)     EDIT LEVEL OF RESULTS (-1,0,1,2)                        -
CD                     EDIT LEVEL IS INDEXED UP IF RESULTS SEEM UNUSUAL  -
CD     IX(9)     HEAT REMOVAL OPTIONS                                    -
CD                   0- NORMAL                                          -
CD                   1- EXCLUDE SOLID CONDUCTION                        -
CD     IX(10)    FUEL ELEMENT GEOMETRY (GRAPHITE, NOW USED ONLY FOR THE  -
CD                 TEMPERATURE CALCULATION IN THE ELEMENT AND AT THE     -
CD                 SURFACE, NOT FOR FLOW)                                -
CD                 0-  SPHERICAL                                         -
CDX                1- CYLINDRICAL (INFINITE LENGTH)                      -
CD*    IX(11)    ITERATION COUNT TERMINATION (DEFAULT ESTIMATED BY CODE) -
CD                   -NO ITERATION IF <0                                 -
CDX    IX(12)    OPTION TO ELIMINATE RADIAL (CROSS) FLOW                 -
CD                   0- NORMAL (INCLUDE)                                 -
CD                   1- EXCLUDE                                          -
CD                   2- EXCLUDE, AND FIX THE AXIAL FLOW RATE PROPORTIONAL -
CD                      TO THE AXIAL HEAT LOAD (IDEAL ORIFICING)         -
CD                   3- SAME AS 2 BUT ORIFICE AT INLET INSTEAD OF OUTLET -
CN     NOTE THAT THE ABOVE NON-ZERO OPTIONS APPLY TO FIXED TRAVERSE      -
CN     COOLANT FLOW REQUIRING ADJUSTMENT IN THE DEFAULT COEFFICIENTS     -
CDX    IX(13)    OPTION FOR FLOW THROUGH HOLES IN SOLID IF > 0           -
CD     IX(14)    ITERATION PROCEDURE OPTION,                             -
CD              -1- DO NOT INCREASE OVERRELAXATION COEFFICIENTS          -
CD               0- ADJUST OVERRELAXATION COEFFIEIENTS DURING ITERATION  -
CD               1- DO NOT INCREASE NOR DECREASE COEFFICIENTS            -
```

(CONT)

```
CD     IX(15)   EQUATION SWEEP ORDER,                                    -
CD            0- SIGMA-1 (ODD POINTS, THEN EVEN POINTS)                  -
CD            1- NORMAL ORDERED (ONE POINT AFTER THE OTHER, Z THEN R)    -
CD     IX(16)   ASYMPTOTIC EXTRAPOLATION PROCEDURE OPTION,               -
CD                            0- NORMAL (ALLOW)                         -
CD                            1- DO NOT ALLOW                           -
CD                           >1- MINIMUM CYCLE DELAY                    -
CD     IX(17)   OPTION ON ASYMPTOTIC EXTRAPOLATION, DATA LEVEL           -
CD            0- STREAM FUNCTION, TEMPERATURES, PRESSURE                 -
CD            1- STREAM FUNCTION, PRESSURE                               -
CD            2- PRESSURE                                                -
CD     IX(18)  OPTION ON THE CALCULATION OF THE LOCAL VOID FRACTION      -
CD       (OVERRIDDEN BY XX(1), APPLICABLE ONLY WHEN THERE ARE SUBZONES)  -
CD            0- SUMS ZONE AND SUBZONE VOLUME FRACTIONS                  -
CD            1- USES ONLY ZONE VOLUME FRACTION                          -
CD            2- SUMS ONLY SUBZONE VOLUME FRACTIONS                      -
CD     IX(19)   INITIALIZATION OPTIONS                                   -
CD           -1  ONLY FOR SUBSEQUENT CASE THE SOLUTION IS KEPT           -
CD            0- AUTOMATED PROCEDURE (AXIAL FLUID HEATING)               -
CD            1- SOMETHING DIFFERENT FOR HE WHO HAS TRIED EVERYTHING     -
CD     IX(20)   WRITE ZONE TEMPERATURE FILE 'ZNTEMP' OPTIONS             -
CD                  -1- NO                                              -
CD                 0,1- WRITE OVER EXISTING ONE IF ONE EXISTS           -
CD                      OTHERWISE WRITE NEW ONE                         -
CD                   2- WRITE OVER NEXT TO LATEST VERSION IF IT EXISTS,-
CD                      OTHERWISE WRITE NEW ONE                         -
CD                   3- GENERATE NEW FILE                               -
CD     IX(21)   SAVE DATA ON AN INTERFACE FILE FOR RECOVERY              -
CD                -1 SAVE DATA IF CONVERGENCE CRITERIA IS NOT SATISFIED -
CD                 0 DO NOT SAVE DATA                                   -
CD                 1 SAVE THE THERMAL HYDRAULICS DATA FOR RECOVERY      -
CD                 2 ALSO SAVE THE PEBBLE THERMAL CONDUCTIVITY DATA     -
CN       DATA IS SAVED FOR ONLY THE FIRST PROBLEM SOLVED IN A CODE ACCESS-
CD     IX(22)   RECOVER DATA FROM AN INTERFACE FILE TO CONTINUE ITERATION-
CD                OR TO INITIALIZE WITH (PROBLEM MUST BE SIMILIAR)      -
CD                   1- RECOVER ALL DATA (NO REPLACEMENT)               -
CD                   2- DO NOT USE VOID FRACTION, POWER DENSITY, NOR    -
CD                      EXPOSURE DATA FROM FILE (USE NEW DATA)          -
CD     IX(23)   OPTION TO RECOVER THE PEBBLE THERMAL CONDUCTIVITY DATA   -
CD                 0- DO NOT                                            -
CD                 1- RECOVER AND USE THE IRRADIATION TEMPERATURE AND   -
CD                    NEUTRON FLUX EXPOSURE FUNCTION DATA               -
CD                    (THIS OPTION REQUIRED TO OBTAIN ONLY EFFECTS OF   -
CD                     SHORT TIME TEMPERATURE CHANGES)                  -
CD                 2- RECOVER AND USE DIRECTLY THE THERMAL CONDUCTIVITY -
CN       PEBBLE THERMAL DATA MAY BE SAVED OR RECOVERED, BUT NOT BOTH.   -
CN       DEFAULT PROCEDURES GIVE PREFERENCE TO DATA RECOVERY OVER SAVING-
CN        (USED FIRST PROBLEM ONLY)                                     -
CD     IX(24)-IX(100)  RESERVED                                          -
C                                                                        -
C------------------------------------------------------------------------
```

(CONT)

SPECIFICATIONS FOR BLANK RECORD IN INTERFACE FILE CONTRL

```
C-----------------------------------------------------------------------
CR          CLOSURE                                                    -
C                                                                      -
CL    BLANK1, (XX(I),I=1,100), (IX(I),I=1,100)                         -
C                                                                      -
CW          101*MULT + 100                                             -
C                                                                      -
CD    BLANK1        END OF FILE IDENTIFIER (6H      ) OR (6HBLANK )    -
C                                                                      -
C-----------------------------------------------------------------------

C***********************************************************************-
C                                                                      -
CEOF        CONTRL                                                     -
C                                                                      -
C***********************************************************************-
```

Figure C.2. Correspondence of Data: DVENTR-DTNINS

DVENTR Input Section 001	DTNINS Record	DVENTR Input Section 001	DTNINS Record	DVENTR Input Section 001	DTNINS Record
RXX1	XX(1)	ICX1	IX(4)	IXE1	IX(32)
RXX2	XX(2)	ICX2	IX(5)	IXE2	IX(33)
RXX3	XX(3)	ICX3	IX(10)	IXE3	IX(35)
RXX4	XX(4)	ICX4	IX(6)	IXE4	IX(38)
RXX5	XX(5)	ICX5	IX(9)	IXE5	IX(39)
RXX6	XX(6)	ICX6	IX(8)	IXE6	IX(40)
RXX7	XX(14)	ICX7	IX(2)	IXE7	IX(41)
RXX8	XX(9)	ICX8	IX(26)	IXE8	IX(42)
RXX9	XX(10)	ICX9	IX(23)	IXE9	IX(37)
RXX10	XX(8)	ICX10	IX(22)	IXE10	IX(31)
RXX11	XX(11)	ICX11	IX(21)	IXE11	IX(29)
RXX12	XX(12)	ICX12	IX(20)	IXE12	IX(30)
RXX13	XX(13)	ICX13	IX(27)	IXE13	IX(61)
RXX14	XX(15)	ICX14	IX(25)	IXE14	IX(62)
RXX15	XX(16)	ICX15	IX(24)	IXE15	IX(51)
RXX16	XX(7)	ICX16	IX(12)	IXE16	IX(58)
RXX17		ICX17	IX(17)	IXE17	IX(53)
RXX18		ICX18	IX(18)	IXE18	IX(54)
		ICX19	IX(19)	IXE19	IX(52)
		ICX20	IX(16)	IXE20	No
		ICX21	IX(13)	IXE21	No
		ICX22	IX(14)	IXE22	IX(45)
		ICX23	IX(15)	IXE23	IX(59)
		ICX24	IX(70)	IXE24	IX(60)

Figure C.2. (con't)

DVENTR Input Section 002	DTNINS Record	DVENTR Input Section 002	DTNINS Record	DVENTR Input Section 002	DTNINS Record
RXXN1	XX(19)	IXCN1	IX(11)	IXEN1	IX(46)
RXXN2	XX(20)	IXCN2	IX(7)	IXEN2	IX(47)
RXXN3	XX(21)	IXCN3	IX(73)	IXEN3	IX(48)
RXXN4	XX(22)	IXCN4	IX(74)	IXEN4	IX(55)
RXXN5	XX(23)	IXCN5	IX(75)	IXEN5	IX(28)
RXXN6	XX(24)	IXCN6	IX(76)	IXEN6	IX(34)
RXXN7	XX(25)	IXCN7	IX(77)	IXEN7	IX(36)
RXXN8	XX(26)	IXCN8	IX(78)	IXEN8	IX(43)
RXXN9	XX(27)	IXCN9	IX(79)	IXEN9	IX(44)
RXXN10	XX(28)	IXCN10	IX(80)	IXEN10	IX(49)
RXXN11	XX(29)	IXCN11	IX(81)	IXEN11	IX(50)
RXXN12	XX(30)	IXCN12	IX(82)	IXEN12	IX(56)
		IXCN13	IX(83)	IXEN13	IX(57)
		IXCN14	IX(84)	IXEN14	IX(63)
		IXCN15	IX(85)	IXEN15	IX(64)
		IXCN16	IX(86)	IXEN16	IX(65)
		IXCN17	IX(87)	IXEN17	IX(66)
		IXCN18	IX(88)	IXEN18	IX(67)
		IXCN19	IX(89)	IXEN19	IX(68)
		IXCN20	IX(90)	IXEN20	IX(69)
		IXCN21		IXEN21	
		IXCN22		IXEN22	
		IXCN23		IXEN23	
		IXCN24		IXEN24	

Figure C.3. Standard Files

SPECIFICATIONS FOR INTERFACE FILE ISOTXS

```
C*************************************************************************-
C                        REVISED 07/23/75                                 -
C                                                                         -
CF          ISOTXS-IIIA                                                   -
C                                                                         -
CE          MICROSCOPIC GROUP NEUTRON CROSS SECTIONS                      -
C                                                                         -
CN                       THIS FILE PROVIDES A BASIC BROAD GROUP           -
CN                       LIBRARY, ORDERED BY ISOTOPE                      -
C                                                                         -
C*************************************************************************-

C-------------------------------------------------------------------------
CS          FILE STRUCTURE                                                -
CS                                                                        -
CS           RECORD TYPE                              PRESENT IF          -
CS           ================================         ===============     -
CS           FILE IDENTIFICATION                      ALWAYS              -
CS           FILE CONTROL                             ALWAYS              -
CS           FILE DATA                                ALWAYS              -
CS           FILE-WIDE CHI DATA                       ICHIST.GT.1         -
CS                                                                        -
CS   *************(REPEAT FOR ALL ISOTOPES)                              -
CS   *       ISOTOPE CONTROL AND GROUP                                    -
CS   *               INDEPENDENT DATA                 ALWAYS              -
CS   *       PRINCIPAL CROSS SECTIONS                 ALWAYS              -
CS   *       ISOTOPE CHI DATA                         ICHI.GT.1           -
CS   *                                                                    -
CS   *  **********(REPEAT TO NSCMAX SCATTERING BLOCKS)                    -
CS   *  * ********(REPEAT FROM 1 TO NSBLOK)                               -
CS   *  * * SCATTERING SUB-BLOCK                     LORD(N).GT.0        -
CS   *************                                                        -
C                                                                         -
C-------------------------------------------------------------------------

C-------------------------------------------------------------------------
CR          FILE IDENTIFICATION                                           -
C                                                                         -
CL    HNAME,(HUSE(I),I=1,2),IVERS                                         -
C                                                                         -
CW    1+3*MULT=NUMBER OF WORDS                                            -
C                                                                         -
CD    HNAME          HOLLERITH FILE NAME - ISOTXS - (A6)                  -
CD    HUSE(I)        HOLLERITH USER IDENTIFICATION (A6)                   -
CD    IVERS          FILE VERSION NUMBER                                  -
CD    MULT           DOUBLE PRECISION PARAMETER                           -
CD                    1- A6 WORD IS SINGLE WORD                           -
CD                    2- A6 WORD IS DOUBLE PRECISION WORD                 -
C                                                                         -
C-------------------------------------------------------------------------
```

(CONT)

```
C-----------------------------------------------------------------------
CR          FILE CONTROL    (1D RECORD)                                -
C                                                                      -
CL    NGROUP,NISO,MAXUP,MAXDN,MAXORD,ICHIST,NSCMAX,NSBLOK              -
C                                                                      -
CW    8=NUMBER OF WORDS                                                -
C                                                                      -
CD    NGROUP         NUMBER OF ENERGY GROUPS IN FILE                   -
CD    NISO           NUMBER OF ISOTOPES IN FILE                        -
CD    MAXUP          MAXIMUM NUMBER OF UPSCATTER GROUPS                -
CD    MAXDN          MAXIMUM NUMBER OF DOWNSCATTER GROUPS              -
CD    MAXORD         MAXIMUM SCATTERING ORDER (MAXIMUM VALUE OF        -
CD                    LEGENDRE EXPANSION INDEX USED IN FILE).          -
CD    ICHIST         FILE-WIDE FISSION SPECTRUM FLAG                   -
CD                    ICHIST.EQ.0, NO FILE-WIDE SPECTRUM               -
CD                    ICHIST.EQ.1, FILE-WIDE CHI VECTOR                -
CD                    ICHIST.GT.1, FILE-WIDE CHI MATRIX                -
CD    NSCMAX         MAXIMUM NUMBER OF BLOCKS OF SCATTERING DATA       -
CD    NSBLOK         SUBBLOCKING CONTROL FOR SCATTER MATRICES. THE     -
CD                    SCATTERING DATA ARE SUBBLOCKED INTO NSBLOK       -
CD                    RECORDS(SUBBLOCKS) PER SCATTERING BLOCK.         -
C                                                                      -
C-----------------------------------------------------------------------
```

```
C-----------------------------------------------------------------------
CR          FILE DATA    (2D RECORD)                                   -
C                                                                      -
CL    (HSETID(I),I=1,12),(HISONM(I),I=1,NISO),                         -
CL   1(CHI(J),J=1,NGROUP),(VEL(J),J=1,NGROUP),                         -
CL   2(EMAX(J),J=1,NGROUP),EMIN,(LOCA(I),I=1,NISO)                     -
C                                                                      -
CW    (NISO+12)*MULT+1+NISO                                            -
CW    +NGROUP*(2+ICHIST*(2/(ICHIST+1)))=NUMBER OF WORDS                -
C                                                                      -
CD    HSETID(I)      HOLLERITH IDENTIFICATION OF FILE (A6)             -
CD    HISONM(I)      HOLLERITH ISOTOPE LABEL FOR ISOTOPE I (A6)        -
CD    CHI(J)         FILE-WIDE FISSION SPECTRUM(PRESENT IF ICHIST.EQ.1) -
CD    VEL(J)         MEAN NEUTRON VELOCITY IN GROUP J (CM/SEC)         -
CD    EMAX(J)        MAXIMUM ENERGY BOUND OF GROUP J (EV)              -
CD    EMIN           MINIMUM ENERGY BOUND OF SET (EV)                  -
CD    LOCA(I)        NUMBER OF RECORDS TO BE SKIPPED TO READ DATA FOR  -
CD                    ISOTOPE I. LOCA(1)=0                             -
C                                                                      -
C-----------------------------------------------------------------------
```

```
C-----------------------------------------------------------------------
CR          FILE-WIDE CHI DATA    (3D RECORD)                          -
C                                                                      -
CC        PRESENT OF ICHIST.GT.1                                       -
C                                                                      -
CL    ((CHI(K,J),K=1,ICHIST),J=1,NGROUP),(ISSPEC(I),I=1,NGROUP)        -
C                                                                      -
CW    NGROUP*(ICHIST+1)=NUMBER OF WORDS                                -
C                                                                      -
```

(CONT)

```
CD    CHI(K,J)        FRACTION OF NEUTRONS EMITTED INTO GROUP J AS A      -
CD                     RESULT OF FISSION IN ANY GROUP,USING SPECTRUM K    -
CD    ISSPEC(I)       ISSPEC(I)=K IMPLIES THATSPECTRUM K IS USED          -
CD                     TO CALCULATE EMISSION SPECTRUM FROM FISSION        -
CD                     IN GROUP I                                         -
C                                                                         -
C-------------------------------------------------------------------------

C-------------------------------------------------------------------------
CR          ISOTOPE CONTROL AND GROUP INDEPENDENT DATA (4D RECORD)        -
C                                                                         -
CL    HABSID,HIDENT,HMAT,AMASS,EFISS,ECAPT,TEMP,SIGPOT,ADENS,KBR,ICHI,    -
CL   1IFIS,IALF,INP,IN2N,IND,INT,LIOT,LTRN,ISTRPD,                        -
CL   2(IDSCT(N),N=1,NSCMAX),(LORD(N),N=1,NSCMAX),                         -
CL   3((JBAND(J,N),J=1,NGROUP),N=1,NSCMAX),                               -
CL   4((IJJ(J,N),J=1,NGROUP),N=1,NSCMAX)                                  -
C                                                                         -
CW    3*MULT+17+NSCMAX*(2*NGROUP+2)=NUMBER OF WORDS                       -
C                                                                         -
CD    HABSID          HOLLERITH ABSOLUTE ISOTOPE LABEL - SAME FOR ALL     -
CD                     VERSIONS OF THE SAME ISOTOPE IN FILE (A6)          -
CD    HIDENT          IDENTIFIER OF LIBRARY FROM WHICH BASIC DATA         -
CD                     CAME(E.G. ENDF/B) (A6)                             -
CD    HMAT            ISOTOPE IDENTIFICATION (E.G. ENDF/B MAT NO.) (A6)   -
CD    AMASS           GRAM ATOMIC WEIGHT                                  -
CD    EFISS           TOTAL THERMAL ENERGY YIELD/FISSION (W.SEC/FISS)     -
CD    ECAPT           TOTAL THERMAL ENERGY YIELD/FISSION (W.SEC/CAPT)     -
CD    TEMP            ISOTOPE TEMPERATURE (DEGREES KELVIN)                -
CD    SIGPOT          AVERAGE EFFECTIVE POTENTIAL SCATTERING IN           -
CD                     RESONANCE RANGE (BARNS/ATOM)                       -
CD    ADENS           DENSITY OF ISOTOPE IN MIXTURE IN WHICH ISOTOPE      -
CD                     CROSS SECTIONS WERE GENERATED (A/BARN-CM)          -
CD    KBR             ISOTOPE CLASSIFICATION                              -
CD                     0=UNDEFINED                                        -
CD                     1=FISSILE                                          -
CD                     2=FERTILE                                          -
CD                     3=OTHER ACTINIDE                                   -
CD                     4=FISSION PRODUCT                                  -
CD                     5=STRUCTURE                                        -
CD                     6=COOLANT                                          -
CD                     7=CONTROL                                          -
CD    ICHI            ISOTOPE FISSION SPECTRUM FLAG                       -
CD                     ICHI.EQ.0, USE FILE-WIDE CHI                       -
CD                     ICHI.EQ.1, ISOTOPE CHI VECTOR                      -
CD                     ICHI.GT.1, ISOTOPE CHI MATRIX                      -
CD    IFIS            (N,F) CROSS SECTION FLAG                            -
CD                     IFIS=0, NO FISSION DATA IN PRINCIPAL CROSS         -
CD                     SECTION RECORD                                     -
CD                     =1, FISSION DATA PRESENT IN PRINCIPAL              -
CD                     CROSS SECTION RECORD                               -
CD    IALF            (N,ALPHA) CROSS SECTION FLAG                        -
CD                     SAME OPTIONS AS IFIS                               -
```

(CONT)

```
CD     INP            (N,P) CROSS SECTION FLAG                                -
CD                     SAME OPTIONS AS IFIS                                   -
CD     IN2N           (N,2N) CROSS SECTION FLAG                               -
CD                     SAME OPTIONS AS IFIS                                   -
CD     IND            (N,D) CROSS SECTION FLAG                                -
CD                     SAME OPTIONS AS IFIS                                   -
CD     INT            (N,T) CROSS SECTION FLAG                                -
CD                     SAME OPTIONS AS IFIS                                   -
CD     LTOT           NUMBER OF MOMENTS OF TOTAL CROSS SECTION PROVIDED      -
CD                     IN PRINCIPAL CROSS SECTIONS RECORD                     -
CD     LTRN           NUMBER OF MOMENTS OF TRANSPORT CROSS SECTION           -
CD                     PROVIDED IN PRINCIPAL CROSS SECTIONS RECORD            -
CD     ISTRPD         NUMBER OF COORDINATE DIRECTIONS FOR WHICH              -
CD                     COORDINATE DEPENDENT TRANSPORT CROSS SECTIONS          -
CD                     ARE GIVEN. IF ISTRPD=0, NO COORDINATE DEPENDENT        -
CD                     TRANSPORT CROSS SECTIONS ARE GIVEN.                    -
CD     IDSCT(N)       SCATTERING MATRIX TYPE IDENTIFICATION FOR              -
CD                     SCATTERING BLOCK N. SIGNIFICANT ONLY IF                -
CD                     LORD(N).GT.0                                           -
CD                     IDSCT(N)=000 + NN, TOTAL SCATTERING                    -
CD                     =100 + NN, ELASTIC SCATTERING                          -
CD                     =200 + NN, INELASTIC SCATTERING                        -
CD                     =300 + NN, (N,2N) SCATTERING,                          -
CD                     WHERE NN IS THE LEGENDRE EXPANSION INDEX OF THE        -
CD                     FIRST MATRIX IN BLOCK N                                -
CD     LORD(N)        NUMBER OF SCATTERING ORDERS IN BLOCK N. IF             -
CD                     LORD(N)=0, THIS BLOCK IS NOT PRESENT FOR THIS          -
CD                     ISOTOPE. IF NN IS THE VALUE TAKEN FROM                 -
CD                     IDSCT(N), THEN THE MATRICES IN THIS BLOCK              -
CD                     HAVE LEGENDRE EXPANSION INDICES OF NN.NN+1,            -
CD                     NN+2,...,NN+LORD(N)-1                                  -
CD     JBAND(J,N)     SCATTERING BANDWIDTH FOR GROUP J, SCATTERING           -
CD                     BLOCK N                                                -
CD     IJJ(J,N)       POSITION OF IN-GROUP SCATTERING CROSS SECTION IN       -
CD                     SCATTERING DATA FOR GROUP J, SCATTERING BLOCK          -
CD                     N,COUNTED FROM THE FIRST WORD OF GROUP J DATA.         -
C                                                                             -
C-----------------------------------------------------------------------------
```

```
C-----------------------------------------------------------------------------
CR          PRINCIPAL CROSS SECTIONS (5D RECORD)                              -
C                                                                             -
CL     ((STRPL(J,L),J=1,NGROUP),L=1,LTRN),                                    -
CL    1((STOTPL(J,L),J=1,NGROUP),L=1,LTOT),(SNGAM(J),J=1,NGROUP),             -
CL    2(SFIS(J),J=1,NGROUP),(SNUTOT(J),J=1,NGROUP),                           -
CL    3(CHISO(J),J=1,NGROUP),(SNALF(J),J=1,NGROUP),                           -
CL    4(SNP(J),J=1,NGROUP),(SN2N(J),J=1,NGROUP),                              -
CL    5(SND(J),J=1,NGROUP),(SNT(J),J=1,NGROUP)                                -
CL    6((STRPD(J,I),J=1,NGROUP),I=1,ISTRPD)                                   -
C                                                                             -
CW     (1+LTRN+LTOT+IALF+INP+IN2N+IND+INT+ISTRPD+2*IFIS+                      -
CW     ICHI*(2/(ICHI+1)))*NGROUP=NUMBER OF WORDS                              -
```

(CONT)

```
C                                                                       -
CD     STRPL(J,L)      PL WEIGHTED TRANSPORT CROSS SECTION              -
CD                      THE FIRST ELEMENT OF ARRAY STRPL IS THE         -
CD                      CURRENT (P1) WEIGHTED TRANSPORT CROSS SECTION   -
CD     STOTPL(J,L)     PL WEIGHTED TOTAL CROSS SECTION                  -
CD                      THE FIRST ELEMENT OF ARRAY STOTPL IS THE        -
CD                      FLUX (P0) WEIGHTED TOTAL CROSS SECTION          -
CD     SNGAM(J)        (N,GAMMA)                                        -
CD     SFIS(J)         (N,F) (PRESENT IF IFIS.GT.0)                     -
CD     SNUTOT(J)       TOTAL NEUTRON YIELD/FISSION (PRESENT IF IFIS.GT.0) -
CD     CHISO(J)        ISOTOPE CHI (PRESENT IF ICHI.EQ.1)               -
CD     SNALF(J)        (N,ALPHA) (PRESENT IF IALF.GT.0)                 -
CD     SNP(J)          (N,P) (PRESENT IF INP.GT.0)                      -
CD     SN2N(J)         (N,2N) (PRESENT IF IN2N.GT.0)                    -
CD     SND(J)          (N,D) (PRESENT IF IND.GT.0)                      -
CD     SNT(J)          (N,T) (PRESENT IF INT.GT.0)                      -
CD     STRPD(J,I)      COORDINATE DIRECTION I TRANSPORT CROSS SECTION   -
CD                      (PRESENT IF ISTRPD.GT.0)                        -
C                                                                       -
C-----------------------------------------------------------------------
```

```
C-----------------------------------------------------------------------
CR          ISOTOPE CHI DATA (6D RECORD)                                -
C                                                                       -
CC          PRESENT IF ICHI.GT.1                                        -
C                                                                       -
CL     ((CHIISO(K,J),K=1,ICHI),J=1,NGROUP),(ISOPEC(I),1=1,NGROUP)       -
C                                                                       -
CW     NGROUP*(ICHI+1)=NUMBER OF WORDS                                  -
C                                                                       -
CD     CHIISO(K,J)     FRACTION OF NEUTRONS EMITTED INTO GROUP J AS A   -
CD                      RESULT OF FISSION IN ANY GROUP,USING SPECTRUM K -
CD     ISOPEC(I)       ISOPEC(I)=K IMPLIES THAT SPECTRUM K IS USED      -
CD                      TO CALCULATE EMISSION SPECTRUM FROM FISSION     -
CD                      IN GROUP I                                      -
C                                                                       -
C                                                                       -
C-----------------------------------------------------------------------
```

```
C-----------------------------------------------------------------------
CR          SCATTERING SUB-BLOCK (7D RECORD)                            -
C                                                                       -
CC        PRESENT IF LORD(N).GT.0                                       -
C                                                                       -
CL     ((SCAT(K,L),K=1,KMAX),L=1,LORDN)                                 -
C                                                                       -
CC     KMAX=SUM OVER J OF JBAND(J,N) WITHIN THE J-GROUP RANGE OF THIS   -
CC      SUB-BLOCK. IF M IS THE INDEX OF THE SUB-BLOCK, THE J-GROUP      -
CC      RANGE CONTAINED WITHIN THIS SUB-BLOCK IS                        -
CC      JL=(M-1)*((NGROUP-1)/NSBLOK+1)+1 TO JU=M*((NGROUP-1)/NSBLOK+1)  -
CC      IF (JU.GT.NGROUP) JU = NGROUP                                   -
C                                                                       -
```

(CONT)

```
CC     LORDN=LORD(N)                                                    -
CC     N IS THE INDEX FOR THE LOOP OVER NSCMAX (SEE FILE STRUCTURE)     -
C                                                                       -
CW     KMAX*LORDN=NUMBER OF WORDS                                       -
C                                                                       -
CD     SCAT(K,L) SCATTERING MATRIX OF SCATTERING ORDER L, FOR           -
CD                    REACTION TYPE IDENTIFIED BY IDSCT(N) FOR THIS     -
CD                    BLOCK. JBAND(J,N) VALUES FOR SCATTERING INTO      -
CD                    GROUP J ARE STORED AT LOCATIONS K=SUM FROM 1      -
CD                    TO (J-1) OF JBAND(J,N) PLUS 1 TO K-1+JBAND(J,N).  -
CD                    THE SUM IS ZERO WHEN J=1. J-TO-J SCATTER IS       -
CD                    THE IJJ(J,N)-TH ENTRY IN THE RANGE JBAND(J,N).    -
CD                    VALUES ARE STORED IN THE ORDER (J+JUP),           -
CD                    (J+JUP-1),...,(J+1),J,(J-1),...,(J-JDN),          -
CD                    WHERE JUP=IJJ(J,N)-1 AND JDN=JBAND(J,N)-IJJ(J,N)  -
C                                                                       -
C-----------------------------------------------------------------------

C***********************************************************************-
C                                                                       -
CEOF         ISOTXS                                                     -
C                                                                       -
C***********************************************************************-
```

SPECIFICATIONS FOR INTERFACE FILE GRUPXS

```
C*********************************************************************-
C                        REVISED 07/23/75                             -
C                                                                     -
CF          GRUPXS-III                                                -
C                                                                     -
CE          MICROSCOPIC GROUP NEUTRON CROSS SECTIONS                  -
C                                                                     -
CN                       THIS FILE PROVIDES A BASIC BROAD GROUP       -
CN                       LIBRARY, ORDERED BY GROUP                    -
C                                                                     -
C*********************************************************************-

C---------------------------------------------------------------------
CS          FILE STRUCTURE                                            -
CS                                                                    -
CS             RECORD TYPE                            PRESENT IF      -
CS             ==============================         ==============  -
CS             FILE IDENTIFICATION                    ALWAYS          -
CS             FILE CONTROL                           ALWAYS          -
CS             FILE DATA                              ALWAYS          -
CS             SET CHI DATA                           ICHIST.GT.1     -
CS             ISOTOPE CONTROL AND GROUP                              -
CS              INDEPENDENT DATA                      ALWAYS          -
CS   *************(REPEAT OVER ALL ENERGY GROUPS)                    -
CS   *         PRINCIPAL CROSS SECTIONS               ALWAYS          -
CS   *************                                                   -
CS   *************(REPEAT OVER NISO ISOTOPES)        NCHIN.GT.0      -
CS   *         ISOTOPE CHI DATA                       ICHI(I).GT.1    -
CS   *************                                                   -
CS   *************(REPEAT OVER ALL ENERGY GROUPS)                    -
CS   *         SCATTERING CONTROL                     ALWAYS          -
CS   * ***********(REPEAT TO NSCMAX SCATTERING BLOCKS)               -
CS   * * **********(REPEAT FROM 1 TO NSBLOK)                          -
CS   * * *     SCATTERING SUB-BLOCK                   LORD(N).GT.0    -
CS   *************                                                   -
C                                                                     -
C---------------------------------------------------------------------

C---------------------------------------------------------------------
CR          FILE IDENTIFICATION                                       -
C                                                                     -
CL    HNAME,(HUSE(I),I=1,2),IVERS                                     -
C                                                                     -
CW    1+3*MULT=NUMBER OF WORDS                                        -
C                                                                     -
CD    HNAME          HOLLERITH FILE NAME - GRUPXS - (A6)              -
CD    HUSE(I)        HOLLERITH USER IDENTIFICATION (A6)               -
CD    IVERS          FILE VERSION NUMBER                              -
CD    MULT           DOUBLE PRECISION PARAMETER                       -
CD                    1- A6 WORD IS SINGLE WORD                       -
CD                    2- A6 WORD IS DOUBLE PRECISION WORD             -
C                                                                     -
C---------------------------------------------------------------------
```

(CONT)

```
C-----------------------------------------------------------------------
CR          FILE CONTROL (1D RECORD)                                   -
C                                                                      -
CL    NGROUP,NISO,MAXUP,MAXDN,MAXORD,ICHIST,NPSCS,NSTRPD,NCHIN,NICHI,  -
CL    NSCMAX,NSBLOK,NRG,NRH                                            -
C                                                                      -
CW    14 = NUMBER OF WORDS                                             -
C                                                                      -
CD    NGROUP         NUMBER OF ENERGY GROUPS IN SET                    -
CD    NISO           NUMBER OF ISOTOPES IN SET                         -
CD    MAXUP          MAXIMUM NUMBER OF UPSCATTER GROUPS                -
CD    MAXDN          MAXIMUM NUMBER OF DOWNSCATTER GROUPS              -
CD    MAXORD         MAXIMUM SCATTERING ORDER (MAXIMUM VALUE OF        -
CD                    LEGENDRE EXPANSION INDEX USED IN FILE)           -
CD    ICHIST         SET FISSION SPECTRUM FLAG                         -
CD                    1- SET FISSION SPECTRUM VECTOR                   -
CD                    .GT.1- NUMBER OF SPECTRA FOR RANGES IN INCIDENT  -
CD                    ENERGY DEPENDENT CHI                             -
CD    NPSCS          LENGTH OF THE PRINCIPAL CROSS SECTION RECORDS     -
CD    NSTRPD         NUMBER OF COORDINATE DIRECTIONS FOR WHICH TRANSPORT -
CD                    CROSS SECTIONS ARE GIVEN, .LE.3                  -
CD    NCHIN          NUMBER OF ISOTOPES FOR WHICH THERE ARE INCIDENT   -
CD                    ENERGY DEPENDENT CHI DATA                        -
CD    NICHI          NUMBER OF INCIDENT ENERGY SPECTRA FOR ISOTOPE CHI -
CD                    DATA (MAXIMUM)                                   -
CD    NSCMAX         MAXIMUM NUMBER OF BLOCKS OF SCATTERING DATA       -
CD                    FOR EACH GROUP SCATTERED INTO - CAN BE THE       -
CD                    NUMBER OF TYPES OF SCATTERING FOR WHICH THERE    -
CD                    ARE DATA                                         -
CD    NSBLOK         BLOCKING CONTROL FOR SCATTER MATRICES. THE        -
CD                    SCATTERING DATA ARE BLOCKED INTO NSBLOK          -
CD                    RECORDS PER SCATTERING BLOCK.                    -
CD    NRG            RESERVED                                          -
CD    NRH            RESERVED                                          -
C                                                                      -
C-----------------------------------------------------------------------
```

```
C-----------------------------------------------------------------------
CR          FILE DATA (2D RECORD)                                      -
C                                                                      -
CL    (HSETID(I),I=1,12),(HISONM(I),I=1,NISO),                         -
CL    ( CHI(J),J=1,NGROUP),(VEL(J),J=1,NGROUP),                        -
CL    (EMAX(J),J=1,NGROUP),EMIN                                        -
C                                                                      -
CW    3*NGROUP+MULT*(NISO+12)+1=NUMBER OF WORDS                        -
C                                                                      -
CD    HSETID(I)      HOLLERITH IDENTIFICATION OF SET (A6)              -
CD    HISONM(I)      HOLLERITH ISOTOPE LABEL FOR ISOTOPE I (A6)        -
CD    CHI(J)         SET FISSION SPECTRUM                              -
CD    VEL(J)         MEAN NEUTRON VELOCITY IN GROUP J (CM/SEC)         -
CD    EMAX(J)        MAXIMUM ENERGY BOUND OF GROUP J (EV)              -
CD    EMIN           MINIMUM ENERGY BOUND OF SET (EV)                  -
C                                                                      -
C-----------------------------------------------------------------------
```

(CONT)

```
C-----------------------------------------------------------------------
CR          SET CHI DATA  (3D RECORD)                                  -
C                                                                      -
CC        PRESENT IF ICHIST.GT.1                                       -
C                                                                      -
CL    ((CHII(K,J),K=1,ICHIST),J=1,NGROUP),(ISSPEC(I),I=1,NGROUP)       -
C                                                                      -
CW    NGROUP*(ICHIST+1)=NUMBER OF WORDS                                -
C                                                                      -
CD    CHII(K,J)      FRACTION OF NEUTRONS EMITTED IN GROUP J AS A      -
CD                    RESULT OF FISSION IN ANY GROUP USING SPECTRUM K  -
CD    ISSPEC(I)      ISSPEC(I)=K IMPLIES THAT SPECTRUM K IS USED TO    -
CD                    CALCULATE EMISSION SPECTRUM FROM FISSION IN      -
CD                    GROUP I                                          -
C                                                                      -
C-----------------------------------------------------------------------
```

```
C-----------------------------------------------------------------------
CR          ISOTOPE CONTROL AND GROUP INDEPENDENT DATA (4D RECORD)     -
C                                                                      -
CL    (HABSID(I),I=1,NISO),(HIDENT(I),I=1,NISO),(HMAT(I)=1,NISO),      -
CL    (AMASS(I),I=1,NISO),                                             -
CL    (EFISS(I),I=1,NISO),(ECAPT(I),I=1,NISO),(XN(I),I=1,NISO),        -
CL    (TEMP(I),I=1,NISO),(SIGPOT(I),I=1,NISO),(ADENS(I),I=1,NISO),     -
CL    (KBR(I),I=1,NISO),(IDSCT(N),N=1,NSCMAX),(LORD(N),N=1,NSCMAX),    -
CL    (ICHI(I),I=1,NISO),IALF,INP,IN2N,IND,INT,IX,IY                   -
C                                                                      -
CW    NISO*(3*MULT+9)+2*NSCMAX+7=NUMBER OF WORDS                       -
C                                                                      -
CD    HABSID(I)      HOLLERITH ABSOLUTE ISOTOPE LABEL (A6)             -
CD    HIDENT         IDENTIFIER, USUALLY ENDF NUMBER (A6)              -
CD    HMAT(I)        MATERIAL REFERENCE FOR IDENTIFICATION (A6)        -
CD    AMASS(I)       GRAM ATOMIC WEIGHT                                -
CD    EFISS(I)       TOTAL THERMAL ENERGY YIELD/FISSION (W.SEC/FISS)   -
CD    ECAPT(I)       THERMAL ENERGY YIELD PER CAPTURE (W.SEC/CAP)      -
CD    XN(I)          RESERVED                                          -
CD    TEMP(I)        ISOTOPE TEMPERATURE (DEGREES KELVIN)              -
CD    SIGPOT(I)      AVERAGE EFFECTIVE POTENTIAL SCATTERING IN         -
CD                    RESONANCE RANGE (BARNS/ATOM)                     -
CD    ADENS(I)       DENSITY OF ISOTOPE IN MIXTURE IN WHICH ISOTOPE    -
CD                    CROSS SECTIONS WERE GENERATED (A/BARN/CC)        -
CD    KBR(I)         ISOTOPE CLASSIFICATION                            -
CD                    0=UNDEFINED                                      -
CD                    1=FISSILE                                        -
CD                    2=FERTILE                                        -
CD                    3=OTHER ACTINIDE                                 -
CD                    4=FISSION PRODUCT                                -
CD                    5=STRUCTURE                                      -
CD                    6=COOLANT                                        -
CD                    7=CONTROL                                        -
```

(CONT)

```
CD     IDSCT(N)       SCATTERING MATRIX TYPE IDENTIFICATION FOR          -
CD                     SCATTERING BLOCK N. SIGNIFICANT ONLY IF           -
CD                     LORD(N).GT.0                                      -
CD                     IDSCT(N)=000+ NN, TOTAL SCATTERING(SUM OF         -
CD                     ELASTIC, INELASTIC, AND N, 2N SCATTERING)         -
CD                     =100 + NN, ELASTIC SCATTERING                     -
CD                     =200 + NN, INELASTIC SCATTERING                   -
CD                     =300 + NN, (N,2N) SCATTERING PER EMITTED NEUTRON  -
CD                     WHERE NN IS EXPANSION ORDER OF BLOCK N DATA,      -
CD                     DATA ORDERED BY INCREASING EXPANSION ORDER        -
CD                     FOR EACH OF THE TYPES IN THE ABOVE ORDER          -
CD     LORD(N)        NUMBER OF SCATTERING ORDERS IN BLOCK N. IF         -
CD                     LORD(N)=0. THIS BLOCK IS NOT PRESENT FOR THIS     -
CD                     ISOTOPE BLOCK. IF NN IS THE VALUE TAKEN FROM      -
CD                     IDSCT(N), THEN THE MATRICES IN THIS BLOCK         -
CD                     HAVE LEGENDRE EXPANSION INDICES OF NN,NN+1,       -
CD                     ,...,NN+LORD(N)-1                                 -
CD     ICHI(I)        ISOTOPE FISSION SPECTRUM FLAG                      -
CD                     0- USE SET CHI                                    -
CD                     1- ISOTOPE CHI VECTOR                             -
CD                     .GT.1- NUMBER OF SPECTRA FOR RANGES IN INCIDENT   -
CD                     ENERGY DEPENDENT CHI                              -
CD     IALF           (N,ALPHA) CROSS SECTION FLAG                       -
CD                     IALF=1, (N,ALPHA) DATA IN THE FILE                -
CD                     IALF=0, NO (N,ALPHA) DATA IN THE FILE             -
CD     INP            (N,P) CROSS SECTION FLAG                           -
CD                     SAME OPTIONS AS FOR IALF                          -
CD     IN2N           (N,2N) CROSS SECTION FLAG                          -
CD                     SAME OPTIONS AS FOR IALF                          -
CD     IND            (N,D) CROSS SECTION FLAG                           -
CD                     SAME OPTIONS AS FOR IALF                          -
CD     INT            (N,T) CROSS SECTION FLAG                           -
CD                     SAME OPTIONS AS FOR IALF                          -
CD     IX             RESERVED                                           -
CD     IY             RESERVED                                           -
C                                                                        -
C-----------------------------------------------------------------------
```

```
C-----------------------------------------------------------------------
CR          PRINCIPAL CROSS SECTIONS (5D RECORD)                         -
C                                                                        -
CL     ((STRPL(I,L),I=1,NISO),L=1,MAXT),                                 -
CL     ((STOTPL(I,L),I=1,NISO),L=1,MAXT),(SNGAM(I),I=1,NISO),            -
CL     (SFIS(I),I=1,NISO),(SNUTOT(I),I=1,NISO),                          -
CL     (CHISO(I),I=1,NISO),(SNALF(I),I=1,NISO),                          -
CL     (SNP(I),I=1,NISO),(SN2N(I),I=1,NISO),                             -
CL     (SND(I),I=1,NISO),(SNT(I),I=1,NISO),                              -
CL     ((STRPD(I,J),I=1,NISO),J=1,NSTRPD)                                -
C                                                                        -
CW     NPSCS=NISO*(2*MAXT+4+IALF+INP+IN2N+IND+INT+NSTRPD)=NUMBER         -
CW     OF WORDS                                                          -
C                                                                        -
```

(CONT)

```
CD    STRPL(I,L)     PL WEIGHTED TRANSPORT CROSS SECTIONS                -
CD    STOTPL(I,L)    PL WEIGHTED TOTAL CROSS SECTIONS                    -
CD    SNGAM(I)       (N,GAMMA) CROSS SECTION                             -
CD    SFIS(I)        (N,FISSION) CROSS SECTION                           -
CD    SNUTOT(I)      TOTAL NEUTRON YIELD/FISSION                         -
CD    CHISO(I)       ISOTOPE CHI VECTOR                                  -
CD    SNALF(I)       (N,ALPHA) (PRESENT IF IALF.GT.0)                    -
CD    SNP(I)         (N,P) (PRESENT IF INP.GT.0)                         -
CD    SN2N(I)        (N,2N) (LOSS) (PRESENT IF IN2N.GT.0)                -
CD    SND(I)         (N,D) (PRESENT IF IND.GT.0)                         -
CD    SNT(I)         (N,T) (PRESENT IF INT .GT.0)                        -
CD    STRPD(I,J)     COORDINATE DIRECTION J DEPENDENT TRANSPORT CROSS    -
CD                    SECTION( PRESENT IF NSTRPD.GT.0)                   -
CD    MAXT           MAXORD+1                                            -
C                                                                        -
C-----------------------------------------------------------------------
```

```
C-----------------------------------------------------------------------
CR          ISOTOPE CHI DATA (6D RECORD)                                 -
C                                                                        -
CC          PRESENT IF NCHIN.GT.0 AND ICHI(I).GT.1                       -
C                                                                        -
CL    ((CHISI(K,J),K=1,ICHII),J=1,NGROUP),(ISOPEC(I),I=1,NGROUP)         -
C                                                                        -
CW    NGROUP*(ICHII + 1)=NUMBER OF WORDS                                 -
C                                                                        -
CD    ICHII          =ICHI(I)                                            -
CD    CHISI(K,J)     FRACTION OF NEUTRONS EMITTED IN GROUP J AS A RESULT -
CD                    OF FISSION IN ANY GROUP USING SPECTRUM K           -
CD    ISOPEC(I)      ISOPEC(I)=K IMPLIES THAT SPECTRUM K IS USED TO     -
CD                    CALCULATE EMISSION SPECTRUM FROM FISSION IN        -
CD                    GROUP I                                            -
C                                                                        -
C-----------------------------------------------------------------------
```

```
C-----------------------------------------------------------------------
CR          SCATTERING CONTROL (7D RECORD)                               -
C                                                                        -
CL    ((JBAND(I,N),I=1,NISO),N=1,NSCMAX),                                -
CL    ((IJJ(I,N),I=1,NISO), N=1,NSCMAX)                                  -
C                                                                        -
CW    2*NISO*NSCMAX=NUMBER OF WORDS                                      -
C                                                                        -
CD    JBAND(I,N)     SCATTERING BANDWIDTH FOR ISOTOPE I, BLOCK N         -
CD    IJJ(I,N)       POSITION OF IN-GROUP SCATTERING CROSS SECTION IN    -
CD                    SCATTERING DATA FOR ISOTOPE I, SCATTERING BLOCK    -
CD                    N, COUNTED FROM THE FIRST WORD OF ISOTOPE I DATA   -
C                                                                        -
C-----------------------------------------------------------------------
```

(CONT)

```
C-----------------------------------------------------------------------
CR          SCATTERING SUB-BLOCK (8D RECORD)                           -
C                                                                      -
CC     PRESENT IF LORD(N).GT.0                                         -
C                                                                      -
CL    ((SCAT(K,L),K=1,KMAX),L=1,LORDN)                                 -
C                                                                      -
CC     KMAX=SUM OVER I OF JBAND(I,N) WITHIN THE I-RANGE OF SUB-BLOCK M. -
CC     THE I-RANGE IS IL=(M-1)*((NISO-1)/NSBLOK+1)+1                   -
CC     TO IU=M*((NISO-1)/NSBLOK+1). LORDN=LORD(N)                      -
C                                                                      -
CW    KMAX*LORDN=NUMBER OF WORDS                                       -
C                                                                      -
CD    SCAT(K,L)      SCATTERING MATRIX OF SCATTERING ORDER L, FOR      -
CD                    REACTION TYPE IDENTIFIED BY IDSCT(N) FOR THIS    -
CD                    BLOCK. JBAND(I) VALUES FOR SCATTERING INTO       -
CD                    GROUP J ARE STORED AT LOCATIONS K=SUM FROM 1     -
CD                    TO (I-1) OF JBAND(I) PLUS 1 TO K-1+JBAND(I).     -
CD                    THE SUM IS ZERO WHEN I=1. J-TO-J SCATTER IS      -
CD                    THE IJJ(I)-TH ENTRY IN THE RANGE JBAND(I).       -
CD                    VALUES ARE STORED IN THE ORDER (J+JUP),          -
CD                    (J+JUP-1),...,(J+1),J,(J-1),...,(J-JDN),         -
CD                    WHERE JUP=IJJ(I)-1 AND JDN=JBAND(I)-IJJ(I)       -
C                                                                      -
CN                    BLOCKING OVER ISOTOPES FOR EACH ORDER IS         -
CN                    NECESSARY IF THE DATA IS TO BE PROCESSED ONCE    -
CN                    SEQUENTIALLY AND THE MACROSCOPIC DATA STORED     -
CN                    ONE ORDER AT A TIME. IN THIS EVENT, EITHER       -
CN                    VALUES OF LORD(N) MUST BE LIMITED TO 1 OR        -
CN                    NSBLOK BE 1.                                     -
C                                                                      -
C-----------------------------------------------------------------------

C***********************************************************************-
C                                                                      -
CEOF        GRUPXS                                                     -
C                                                                      -
C***********************************************************************-
```

SPECIFICATIONS FOR INTERFACE FILE GEODST

```
C*********************************************************************-
C                        REVISED 07/22/75                             -
C                                                                     -
CF          GEODST - III                                              -
C                                                                     -
CE          GEOMETRY DESCRIPTION                                      -
C                                                                     -
C*********************************************************************-

C---------------------------------------------------------------------
CR          FILE IDENTIFICATION                                       -
C                                                                     -
CL    HNAME,(HUSE(I),I=1,2),IVERS                                     -
C                                                                     -
CW    1+3*MULT=NUMBER OF WORDS                                        -
C                                                                     -
CD    HNAME              HOLLERITH FILE NAME - GEODST - (A6)          -
CD    HUSE(I)            HOLLERITH USER IDENTIFICATION (A6)           -
CD    IVERS              FILE VERSION NUMBER                          -
CD    MULT               DOUBLE PRECISION PARAMETER                   -
CD                           1- A6 WORD IS SINGLE WORD                -
CD                           2- A6 WORD IS DOUBLE PRECISION WORD      -
C                                                                     -
C---------------------------------------------------------------------


C---------------------------------------------------------------------
CR          FILE SPECIFICATIONS        (1D RECORD)                    -
C                                                                     -
CL    IGOM,NZONE,NREG,NZCL,NCINTI,NCINTJ,NCINTK,NINTI,NINTJ,NINTK,IMB1, -
CL    IMB2,JMB1,JMB2,KMB1,KMB2,NBS,NBCS,NIBCS,NZWBB,NTRIAG,NRASS,     -
CL    (NGOP(I),I=1,5)                                                 -
C                                                                     -
CW    27=NUMBER OF WORDS                                              -
C                                                                     -
CD    IGOM               GEOMETRY  0- POINT (FUNDAMENTAL MODE)        -
CD                                 1- SLAB                            -
CD                                 2- CYLINDER                        -
CD                                 3- SPHERE                          -
CD                                 6- X-Y                             -
CD                                 7- R-Z                             -
CD                                 8- THETA-R                         -
CD                                 9- TRIAGONAL (6 MESH POINTS IN EACH -
CD                                                HEXAGONAL ELEMENT)  -
CD                                10- HEXAGONAL (1 MESH POINT IN EACH  -
CD                                                HEXAGONAL ELEMENT)  -
CD                                11- R-THETA                         -
CD                                12- R-THETA-Z                       -
CD                                13- R-THETA-ALPHA                   -
CD                                14- X-Y-Z                           -
CD                                15- THETA-R-Z                       -
CD                                16- THETA-R-ALPHA                   -
CD                                17- TRIAGONAL-Z (MESH POINTS AS IN 9, -
```

(CONT)

```
CD                                                  ABOVE)                  -
CD                                18- HEXAGON-Z     (MESH POINTS AS IN 10   -
CD                                                  ABOVE)                  -
CD    NZONE              NUMBER OF ZONES (EACH HOMOGENEOUS IN NEUTRONICS -
CD                       PROBLEM - A ZONE CONTAINS ONE OR MORE REGIONS)  -
CD    NREG               NUMBER OF REGIONS                                -
CD    NZCL               NUMBER OF ZONE CLASSIFICATIONS (EDIT PURPOSES)  -
CD    NCINTI             NUMBER OF FIRST DIMENSION COARSE MESH INTERVALS -
CD    NCINTJ             NUMBER OF SECOND DIMENSION COARSE MESH           -
CD                                INTERVALS,  NCINTJ.EQ.1 FOR ONE         -
CD                                DIMENSIONAL CASE.                       -
CD    NCINTK             NUMBER OF THIRD DIMENSION COARSE MESH INTERVALS -
CD                                NCINTK.EQ.1 FOR ONE AND TWO             -
CD                                DIMENSIONAL CASES.                      -
CD    NINTI              NUMBER OF FIRST DIMENSION FINE MESH INTERVALS   -
CD    NINTJ              NUMBER OF SECOND DIMENSION FINE MESH INTERVALS  -
CD                                NINTJ.EQ.1 FOR ONE DIMENSIONAL CASE.    -
CD    NINTK              NUMBER OF THIRD DIMENSION FINE MESH INTERVALS   -
CD                                NINTK.EQ.1 FOR ONE AND TWO DIMENSIONAL -
CD                                CASES.                                  -
CD    IMB1               FIRST BOUNDARY ON FIRST DIMENSION               -
CD                                0- ZERO FLUX (DIFFUSION)                -
CD                                1- REFLECTED                            -
CD                                2- EXTRAPOLATED (DIFFUSION - DEL PHI    -
CD                                   /PHI =-C/D WHERE C IS GIVEN AS BNDC -
CD                                   BELOW AND D IS THE GROUP DIFFUSION  -
CD                                   CONSTANT, TRANSPORT - NO RETURN)    -
CD                                3- REPEATING (PERIODIC) WITH OPPOSITE   -
CD                                   FACE                                -
CD                                4- REPEATING (PERIODIC) WITH NEXT       -
CD                                   ADJACENT FACE GOING CLOCKWISE       -
CD                                   AROUND THE FIRST AND SECOND         -
CD                                   DIMENSION PERIMETER.  PERTINENT     -
CD                                   ONLY FOR 2 OR 3 DIMENSIONAL         -
CD                                   PROBLEMS.                           -
CD                                5- INVERTED REPEATING ALONG THIS FACE   -
CD                                   (180 DEGREE ROTATION)               -
CD                                6- ISOTROPIC RETURN (TRANSPORT)         -
C           NOTE THAT FOR REPEATING BOUNDARIES, THE FIRST BOUNDARY IN     -
C           ORDER WHICH IS INVOLVED CARRIES THE DESIGNATOR DEFINING       -
C           THE REPEATING CONDITION.                                      -
CD    IMB2               LAST BOUNDARY ON FIRST DIMENSION                -
CD    JMB1               FIRST BOUNDARY ON SECOND DIMENSION              -
CD    JMB2               LAST BOUNDARY ON SECOND DIMENSION               -
CD    KMB1               FIRST BOUNDARY ON THIRD DIMENSION               -
CD    KMB2               LAST BOUNDARY ON THIRD DIMENSION                -
CD    NBS                NUMBER OF BUCKLING SPECIFICATIONS               -
CD                           1- SINGLE VALUE APPLIES EVERYWHERE           -
CD                           .EQ.NZONE, ZONE-DEPENDENT                    -
CD                           .GT.NZONE, DATA IS GIVEN OVER ALL ZONES FOR -
CD                             THE FIRST ENERGY GROUP, THEN FOR THE NEXT -
CD                             GROUP, TO END OF LIST - IF THERE ARE MORE -
CD                             GROUPS, LAST GROUP DATA GIVEN IS USED     -
```

(CONT)

```
CD     NBCS              NUMBER OF CONSTANTS FOR EXTERNAL BOUNDARIES     -
CD                           1- SINGLE VALUE USED EVERYWHERE              -
CD                           6- INDIVIDUAL VALUES FOR EACH POSSIBLE       -
CD                             SURFACE (BOUNDARY SPECS GIVE ACTUAL USE)   -
CD                           .GT.6- SIX VALUES ARE GIVEN FOR THE FIRST    -
CD                             ENERGY GROUP, THEN SIX FOR THE NEXT, TO    -
CD                             THE END OF THE LIST - THE LAST GROUP DATA  -
CD                             GIVEN APPLIES TO ALL ADDITIONAL GROUPS     -
CD     NIBCS             NUMBER OF CONSTANTS FOR INTERNAL BOUNDARIES     -
CD                           1- SINGLE VALUES USED EVERYWHERE             -
CD                           .GT.1- VALUES ARE GIVEN BY ENERGY GROUP      -
CD                             WITH NON-BLACK CONDITION INDICATED BY      -
CD                             ZERO ENTRY - LAST VALUE APPLIES TO         -
CD                             ADDITIONAL GROUPS                          -
CD     NZWBB             NUMBER OF ZONES WHICH ARE BLACK ABSORBERS       -
CD     NTRIAG            TRIAGONAL GEOMETRY OPTION                       -
CD                           0- RHOMBUS WITH COORDINATES AT 120 DEGREES   -
CD                              ORIGIN IS AT THE CENTER OF A HEXAGONAL    -
CD                              ASSEMBLY, BOUNDARIES PASS THROUGH         -
CD                              CORNERS OF HEXAGONAL ASSEMBLIES.          -
CD                           1- SAME AS OPTION 0 EXCEPT COORDINATES AT    -
CD                              60 DEGREES                                -
CD                           2- RECTANGLE (COORDINATES AT 90 DEGREES),    -
CD                              FIRST BOUNDARY PERPENDICULAR TO           -
CD                              HEXAGONAL FLAT.                           -
CD                           3- EQUILATERAL (60 DEGREE) TRIANGLE.  TWO    -
CD                              BOUNDARIES ORIGINATING AT CENTER OF       -
CD                              HEXAGONAL ASSEMBLY PASS THROUGH CORNERS   -
CD                              OF HEXAGONAL ASSEMBLIES.                  -
CD                           4- TRIANGLE (30-60 DEGREE). FIRST BOUNDARY   -
CD                              PERPENDICULAR TO FLATS.                   -
CD     NRASS             REGION ASSIGNMENTS                              -
CD                           0- TO COARSE MESH                            -
CD                           1- TO FINE MESH                              -
CD     NGOP(I)           RESERVED                                        -
C                                                                         -
C-------------------------------------------------------------------------
```

```
C-------------------------------------------------------------------------
CR          ONE DIMENSIONAL COARSE MESH INTERVAL BOUNDARIES AND FINE      -
CR          MESH INTERVALS              (2D RECORD)                       -
C                                                                         -
CC          PRESENT IF IGOM.GT.0 AND IGOM.LE.3                            -
C                                                                         -
CL     (XMESH(I),I=1,NCBNDI),(IFINTS(I),I=1,NCINTI)                       -
C                                                                         -
CW     NCBNDI*MULT+NCINTI=NUMBER OF WORDS                                 -
C                                                                         -
CD     XMESH(I)          COARSE MESH BOUNDARIES, FIRST DIMENSION         -
CD     IFINTS(I)         NUMBER OF FINE MESH INTERVALS PER COARSE MESH   -
CD                           INTERVAL, FIRST DIMENSION                    -
CD     NCBNDI            NCINTI+1, NUMBER OF FIRST DIMENSION COARSE MESH -
CD                           BOUNDARIES                                   -
```

(CONT)

```
C                                                                       -
CC        UNITS ARE CM FOR LINEAR DIMENSIONS AND RADIANS FOR ANGULAR    -
CC        DIMENSIONS                                                    -
C                                                                       -
C-----------------------------------------------------------------------


C-----------------------------------------------------------------------
CR          TWO DIMENSIONAL COARSE MESH INTERVAL BOUNDARIES AND FINE    -
CR          MESH INTERVALS              (3D RECORD)                     -
C                                                                       -
CC          PRESENT IF IGOM.GE.6 AND IGOM.LE.11                         -
C                                                                       -
CL     (XMESH(I),I=1,NCBNDI),(YMESH(J),J=1,NCBNDJ),                     -
CL    1(IFINTS(I),I=1,NCINTI),(JFINTS(J),J=1,NCINTJ)                    -
C                                                                       -
CW     (NCBNDI+NCBNDJ)*MULT+NCINTI+NCINTJ=NUMBER OF WORDS               -
C                                                                       -
CD     YMESH(J)            COARSE MESH BOUNDARIES, SECOND DIMENSION     -
CD     JFINTS(J)           NUMBER OF FINE MESH INTERVALS PER COARSE MESH -
CD                             INTERVAL, SECOND DIMENSION               -
CD     NCBNDJ              NCINTJ+1, NUMBER OF SECOND DIMENSION COARSE  -
CD                             MESH BOUNDARIES                          -
C                                                                       -
C-----------------------------------------------------------------------


C-----------------------------------------------------------------------
CR          THREE DIMENSIONAL COARSE MESH INTERVAL BOUNDARIES AND FINE  -
CR          MESH INTERVALS          (4D RECORD)                         -
C                                                                       -
CC          PRESENT IF IGOM.GE.12                                       -
C                                                                       -
CL     (XMESH(I),I=1,NCBNDI),(YMESH(J),J=1,NCBNDJ),                     -
CL    1(ZMESH(K),K=1,NCBNDK),(IFINTS(I),I=1,NCINTI),                    -
CL    2(JFINTS(J),J=1,NCINTJ),(KFINTS(K),K=1,NCINTK)                    -
C                                                                       -
CW     (NCBNDI+NCBNDJ+NCBNDK)*MULT+NCINTI+NCINTJ+NCINTK=NUMBER OF WORDS -
C                                                                       -
CD     ZMESH(K)            COARSE MESH BOUNDARIES, THIRD DIMENSION      -
CD     KFINTS(K)           NUMBER OF FINE MESH INTERVALS PER COARSE MESH -
CD                             INTERVAL, THIRD DIMENSION                -
CD     NCBNDK              NCINTK+1, NUMBER OF THIRD DIMENSION COARSE MESH -
CD                             BOUNDARIES                               -
C                                                                       -
C-----------------------------------------------------------------------


C-----------------------------------------------------------------------
CR          GEOMETRY DATA         (5D RECORD)                           -
C                                                                       -
CC          PRESENT IF IGOM.GT.0 OR NBS.GT.0                            -
C                                                                       -
CL     (VOLR(N),N=1,NREG),(BSQ(N),N=1,NBS),(BNDC(N),N=1,NBCS),          -
CL     (BNCI(N),N=1,NIBCS),(NZHBB(N),N=1,NZWBB),(NZC(N),N=1,NZONE),     -
CL     (NZNR(N),N=1,NREG)                                               -
```

(CONT)

```
C                                                                       -
CW    2*NREG+NBS+NBCS+NIBCS+NZWBB+NZONE=NUMBER OF WORDS                 -
C                                                                       -
CD    VOLR(N)            REGION VOLUMES (CC)                            -
CD    BSQ(N)             BUCKLING (B**2) VALUES (CM**-2)                -
CD    BNDC(N)            BOUNDARY CONSTANTS (DEL PHI/PHI =-C/D)         -
CD    BNCI(N)            INTERNAL BLACK BOUNDARY CONSTANTS              -
CD    NZHBB(N)           ZONE NUMBERS WITH BLACK ABSORBER CONDITIONS    -
CD    NZC(N)             ZONE CLASSIFICATIONS                           -
CD    NZNP(N)            ZONE NUMBER ASSIGNED TO EACH REGION            -
C                                                                       -
C-----------------------------------------------------------------------

C-----------------------------------------------------------------------
CR          REGION ASSIGNMENTS TO COARSE MESH INTERVALS                 -
CR                              (6D RECORD)                             -
C                                                                       -
CC          PRESENT IF IGOM.GT.0 AND NRASS.EQ.0                         -
C                                                                       -
CL    ((MR(I,J),I=1,NCINTI),J=1,NCINTJ)----NOTE STRUCTURE BELOW----     -
C                                                                       -
CW    NCINTI*NCINTJ=NUMBER OF WORDS                                     -
C                                                                       -
CS    DO 1 K=1,NCINTK                                                   -
CS  1 READ(N) *LIST AS ABOVE*                                           -
C                                                                       -
CD    MR(I,J)            REGION NUMBERS ASSIGNED TO COARSE MESH         -
CD                           INTERVALS                                  -
C                                                                       -
C-----------------------------------------------------------------------

C-----------------------------------------------------------------------
CR          REGION ASSIGNMENTS TO FINE MESH INTERVALS                   -
CR                                (7D RECORD)                           -
C                                                                       -
CC          PRESENT IF IGOM.GT.0 AND NRASS.EQ.1                         -
C                                                                       -
CL    ((MR(I,J),I=1,NINTI),J=1,NINTJ)----NOTE STRUCTURE BELOW----       -
C                                                                       -
CW    NINTI*NINTJ=NUMBER OF WORDS                                       -
C                                                                       -
CS    DO 1 K=1,NINTK                                                    -
CS  1 READ(N) *LIST AS ABOVE*                                           -
C                                                                       -
CD    MR(I,J)            REGION NUMBERS ASSIGNED TO FINE MESH INTERVALS -
C                                                                       -
C-----------------------------------------------------------------------

C***********************************************************************-
C                                                                       -
CEOF        GEODST                                                      -
C                                                                       -
C***********************************************************************-
```

SPECIFICATIONS FOR INTERFACE FILE NDXSRF

```
C*********************************************************************-
C                        REVISED 07/22/75                             -
C                                                                     -
CF          NDXSRF - III                                              -
C                                                                     -
CE          NUCLIDE DENSITY, DATA, CROSS SECTION REFERENCING          -
C                                                                     -
C*********************************************************************-

C---------------------------------------------------------------------
CR          FILE IDENTIFICATION                                       -
C                                                                     -
CL    HNAME,(HUSE(I),I=1,2),IVERS                                     -
C                                                                     -
CW    1+3*MULT=NUMBER OF WORDS                                        -
C                                                                     -
CD    HNAME          HOLLERITH FILE NAME - NDXSRF - (A6)              -
CD    HUSE(I)        HOLLERITH USER IDENTIFICATION (A6)               -
CD    IVERS          FILE VERSION NUMBER                              -
CD    MULT           DOUBLE PRECISION PARAMETER                       -
CD                    1- A6 WORD IS SINGLE WORD                       -
CD                    2- A6 WORD IS DOUBLE PRECISION WORD             -
C                                                                     -
C---------------------------------------------------------------------


C---------------------------------------------------------------------
CR          SPECIFICATIONS          (1D RECORD)                       -
C                                                                     -
CL    NON,NSN,NNS,NAN,NZONE,NSZ                                       -
C                                                                     -
CW    6   =NUMBER OF WORDS                                            -
C                                                                     -
CD    NON                NUMBER OF NUCLIDES IN CROSS SECTION DATA   -
CD    NSN                NUMBER OF NUCLIDE SETS IDENTIFIED          -
CD    NNS                MAXIMUM NUMBER OF NUCLIDES IN ANY SET      -
CD    NAN                NUMBER OF DIFFERENT NUCLIDES IN DATA       -
CD    NZONE              NUMBER OF ZONES                            -
CD    NSZ                NUMBER OF SUBZONES (SUBASSEMBLIES)         -
C                                                                     -
C---------------------------------------------------------------------


C---------------------------------------------------------------------
C      NUCLIDE REFERENCING DATA            (2D RECORD)                -
C                                                                     -
CL    (HNNAME(N),N=1,NON),(HANAME(N),N=1,NON),(WPF(N),N=1,NON),       -
CL    (ATWT(J),J=1,NAN),(NCLN(N),N=1,NON),((NDXS(K,L),K=1,4),L=1,NSN), -
CL    ((NOS(I,L),I=1,NNS),L=1,NSN),((NOR(N,L),N=1,NON),L=1,NSN)       -
C                                                                     -
CW    NAN+2*NON*(1+MULT)+NSN*(4+NNS+NON)=NUMBER OF WORDS              -
C                                                                     -
CD    HNNAME(N)          UNIQUE REFERENCE NUCLIDE NAME, IN LIBRARY ORDER -
CD                        (A6) ALPHANUMERIC                           -
CD    HANAME(N)          ABSOLUTE NUCLIDE REFERENCE, IN LIBRARY ORDER -
CD                        (A6) ALPHANUMERIC                           -
```

(CONT)

```
CD     WPF(N)            RESERVED                                          -
CD     ATWT(J)           ATOMIC WEIGHT                                     -
CD     NCLN(N)           NUCLIDE CLASSIFICATION                            -
CD                        1- FISSILE                                       -
CD                        2- FERTILE                                       -
CD                        3- OTHER ACTINIDE                                -
CD                        4- FISSION PRODUCT                               -
CD                        5- STRUCTURAL                                    -
CD                        6- COOLANT                                       -
CD                        7- CONTROL ROD                                   -
CD                        GREATER THAN 7, UNDEFINED                        -
CD     NDXS(K,L)         REFERENCE DATA FOR SET L                          -
CD                        K = 1, NUMBER OF NUCLIDES IN SET                 -
CD                        K = 2, RESERVED                                  -
CD                        K = 3, RESERVED                                  -
CD                        K = 4, RESERVED                                  -
CD     NOS(I,L)          ORDER NUMBER OF NUCLIDE IN CROSS SECTION DATA    -
CD                        (IN HNNAME LIST) OF NUCLIDE ORDERED I IN         -
CD                        SET L                                            -
CD     NOR(N,L)          ORDER NUMBER OF NUCLIDE IN SET L GIVEN ORDER     -
CD                        NUMBER N IN CROSS SECTION DATA                   -
C                                                                          -
C-------------------------------------------------------------------------

C-------------------------------------------------------------------------
CR           NUCLIDE CONCENTRATION ASSIGNMENT DATA (3D RECORD)             -
C                                                                          -
CL     (VOLZ(N),N=1,NZONE),(VFPA(N),N=1,NZONE),(VLSA(M),M=1,NSZ),          -
CL     (NSPA(N),N=1,NZONE),(NSSA(M),M=1,NSZ),(NZSZ(M),M=1,NSZ)              -
C                                                                          -
CW     3*(NZONE+NSZ)=NUMBER OF WORDS                                       -
C                                                                          -
CD     VOLZ(N)           VOLUMES OF ZONES, CC                              -
CD     VFPA(N)           VOLUME FRACTIONS FOR PRIMARY ZONE ASSIGNMENTS     -
CD     VLSA(M)           VOLUMES OF SUBZONES                               -
CD     NSPA(N)           NUCLIDE SET REFERENCE, PRIMARY ZONE ASSIGNMENT    -
CD                        (MAY BE ZERO ONLY IF THERE ARE SUBZONES)         -
CD     NSSA(M)           NUCLIDE SET REFERENCE ASSIGNMENT TO SUBZONES      -
CD     NZSZ(M)           ZONE CONTAINING SUBZONE                           -
C                                                                          -
C      NOTE THAT TO CALCULATE MACROSCOPIC CROSS SECTIONS FOR A ZONE,       -
C      IT IS NECESSARY TO CONSIDER THE CONCENTRATION OF EACH NUCLIDE       -
C      IN THE PRIMARY SET ASSIGNMENT (UNLESS A ZERO IN NSPA INDICATES      -
C      THERE ARE NONE) TIMES THE VOLUME FRACTION, AND THE CONCENTRATION    -
C      OF EACH NUCLIDE IN EACH SUBZONE ASSIGNED TO THE ZONE TIMES THE      -
C      RATIO OF THE SUBZONE VOLUME TO THE ZONE VOLUME.                     -
C                                                                          -
C-------------------------------------------------------------------------

C*************************************************************************-
C                                                                          -
CEOF         NDXSRF                                                        -
C                                                                          -
C*************************************************************************-
```

SPECIFICATIONS FOR INTERFACE FILE ZNATDN

```
C*************************************************************************-
C                        REVISED 07/22/75                                 -
C                                                                         -
CF          ZNATDN - III                                                  -
C                                                                         -
CE          ZONE ATOMIC DENSITIES (OF NUCLIDES)                           -
C                                                                         -
C*************************************************************************-

C-------------------------------------------------------------------------
CR          FILE IDENTIFICATION                                           -
C                                                                         -
CL    HNAME,(HUSE(I),I=1,2),IVERS                                         -
C                                                                         -
CW    1+3*MULT=NUMBER OF WORDS                                            -
C                                                                         -
CD    HNAME              HOLLERITH FILE NAME - ZNATDN -(A6)               -
CD    HUSE(I)            HOLLERITH USER IDENTIFICATION (A6)               -
CD    IVERS              FILE VERSION NUMBER                              -
CD    MULT               DOUBLE PRECISION PARAMETER                       -
CD                        1- A6 WORD IS SINGLE WORD                       -
CD                        2- A6 WORD IS DOUBLE PRECISION WORD             -
C                                                                         -
C-------------------------------------------------------------------------


C-------------------------------------------------------------------------
CR          SPECIFICATIONS            (1D RECORD)                         -
C                                                                         -
CL    TIME,NCY,NTZSZ,NNS,NBLKAD                                           -
C                                                                         -
CW    5=NUMBER OF WORDS                                                   -
C                                                                         -
CD    TIME               REFERENCE REAL TIME, DAYS                        -
CD    NCY                REFERENCE CYCLE NUMBER                           -
CD    NTZSZ              NUMBER OF ZONES PLUS NUMBER OF SUBZONES          -
CD    NNS                MAXIMUM NUMBER OF NUCLIDES IN ANY SET            -
CD    NBLKAD             NUMBER OF BLOCKS OF ATOM DENSITY DATA            -
C                                                                         -
C-------------------------------------------------------------------------
```

(CONT)

```
C-----------------------------------------------------------------------
CR          ZONE ATOMIC DENSITIES (OF NUCLIDES) (2D RECORD)             -
C                                                                       -
CL    ((ADEN(N,J),N=1,NNS),J=JL,JJ)----SEE STRUCTURE BELOW----          -
C                                                                       -
CW    NNS*((NTZSZ-1)/NBLKAD+1)=NUMBER OF WORDS                          -
C                                                                       -
CS    DO 1 M=1,NBLKAD                                                   -
CS  1 READ(N) *LIST AS ABOVE*                                           -
C                                                                       -
CC     WITH M AS THE BLOCK INDEX, JL=(M-1)*((NTZSZ-1)/NBLKAD+1)+1       -
CC     AND JU=M*((NTZSZ-1)/NBLKAD+1)                                    -
C                                                                       -
CD    ADEN(N,J)          ATOMIC DENSITY OF NUCLIDE ORDERED N IN THE     -
CD                       ASSOCIATED SET GIVEN IN ORDER FOR EACH ZONE    -
CD                       FOLLOWED IN ORDER FOR EACH SUBZONE             -
C                                                                       -
C-----------------------------------------------------------------------

C***********************************************************************-
C                                                                       -
CEOF        ZNATDN                                                      -
C                                                                       -
C***********************************************************************-
```

SPECIFICATIONS FOR INTERFACE FILE RTFLUX

```
C*********************************************************************-
C                        REVISED 07/23/75 - REVISED 04/01/80            -
C                                                                       -
CF          RTFLUX                                                      -
C                                                                       -
CE          REGULAR TOTAL FLUXES                                        -
C                                                                       -
C*********************************************************************-

                         ORDER OF GROUPS IS ACCORDING TO DECREASING
                         ENERGY, NOTE THAT DOUBLE PRECISION FLUXES ARE
                         GIVEN WHEN MULT.EQ.2

C---------------------------------------------------------------------
CR          FILE IDENTIFICATION                                         -
C                                                                       -
CL    HNAME,(HUSE(I),I=1,2),IVERS                                       -
C                                                                       -
CW    1+3*MULT=NUMBER OF WORDS                                          -
C                                                                       -
CD    HNAME          HOLLERITH FILE NAME - RTFLUX - (A6)                -
CD    HUSE(I)        HOLLERITH USER IDENTIFICATION (A6)                 -
CD    IVERS          FILE VERSION NUMBER                                -
C                                                                       -
CD    MULT           DOUBLE-PRECISION PARAMETER                         -
CD                       1- A6 WORD IS SINGLE WORD                      -
CD                       2- A6 WORD IS DOUBLE PRECISION WORD            -
C                                                                       -
C---------------------------------------------------------------------


C---------------------------------------------------------------------
CR          SPECIFICATIONS    (1D RECORD)                               -
C                                                                       -
CL    NDIM,NGROUP,NINTI,NINTJ,NINTK,ITER,EFFK,POWER                     -
C                                                                       -
CW    8=NUMBER OF WORDS                                                 -
C                                                                       -
CD    NDIM           NUMBER OF DIMENSIONS                               -
CD    NGROUP         NUMBER OF ENERGY GROUPS                            -
CD    NINTI          NUMBER OF FIRST DIMENSION FINE MESH INTERVALS      -
CD    NINTJ          NUMBER OF SECOND DIMENSION FINE MESH INTERVALS     -
CD    NINTK          NUMBER OF THIRD DIMENSION FINE MESH INTERVALS,     -
CD                   NINTK.EQ.1 IF NDIM.LE.2                            -
C                                                                       -
CN          FOR MESHPOINT EDGE LOCATIONS, NINTI, NINTJ, AND NINTK ARE  *-
CN          INTERPRETED AS THE NUMBER OF POINTS (ONE MORE THAN THE     *-
CN          NUMBER OF INTERVALS)                                       *-
CN          FOR SPECIAL TRIANGULAR GEOMETRIES, NINTI IS THE NUMBER OF  *-
CN          POINTS ON EACH PLANE, AND NINTJ IS SET TO 1.               *-
C                                                                       -
CD    ITER           OUTER ITERATION NUMBER AT WHICH FLUX WAS WRITTEN   -
CD                   MADE NEGATIVE FOR MESH EDGE POINTS                 *-
```

(CONT)

```
CD    EFFK          EFFECTIVE MULTIPLICATION FACTOR                    -
CD                  SET TO ZERO IF FIXED SOURCE PROBLEM               *-
CD    POWER         POWER IN WATTS TO WHICH FLUX IS NORMALIZED         -
C                                                                      -
C----------------------------------------------------------------------


C----------------------------------------------------------------------
CR          ONE DIMENSIONAL REGULAR TOTAL FLUX   (2D RECORD)           -
C                                                                      -
CC          PRESENT IF NDIM.EQ.1                                       -
C                                                                      -
CL    ((FREG(I,J),I=1,NINTI),J=1,NGROUP)                               -
C                                                                      -
CW    NINTI*NGROUP*MULT=NUMBER OF WORDS                                -
C                                                                      -
CD    FREG(I,J)     ONE DIMENSIONAL REGULAR TOTAL FLUX BY INTERVAL     -
CD                  AND GROUP                                          -
C                                                                      -
C----------------------------------------------------------------------


C----------------------------------------------------------------------
CR          MULTI=DIMENSIONAL REGULAR TOTAL FLUX   (3D RECORD)         -
C                                                                      -
CC          PRESENT IF NDIM.GE.2                                       -
C                                                                      -
CL    ((FREG(I,J),I=1,NINTI),J=1,NINTJ)-----NOTE STRUCTURE BELOW-----  -
C                                                                      -
CW    NINTI*NINTJ*MULT=NUMBER OF WORDS                                 -
C                                                                      -
CS    DO 1 L=1,NGROUP                                                  -
CS    DO 1 K=1,NINTK                                                   -
CS  1 READ(N)     *LIST AS ABOVE*                                      -
C                                                                      -
CD    FREG(I,J)     MULTI-DIMENSIONAL REGULAR TOTAL FLUX               -
CD                  BY INTERVAL FOR EACH GROUP                         -
C                                                                      -
C----------------------------------------------------------------------

C**********************************************************************-
C                                                                      -
CEOF        RTFLUX                                                     -
C                                                                      -
C**********************************************************************-
```

SPECIFICATIONS FOR INTERFACE FILE ATFLUX

```
C*********************************************************************-
C                        REVISED 07/23/75 - REVISED 04/01/80            -
C                                                                       -
CF          ATFLUX                                                      -
C                                                                       -
CE          ADJOINT TOTAL FLUXES                                        -
C                                                                       -
C*********************************************************************-

                         ORDER OF GROUPS IS ACCORDING TO INCREASING
                         ENERGY, NOTE THAT DOUBLE PRECISION FLUXES ARE
                         GIVEN WHEN MULT.EQ.2

C-------------------------------------------------------------------
CR          FILE IDENTIFICATION                                         -
C                                                                       -
CL    HNAME,(HUSE(I),I=1,2),IVERS                                       -
C                                                                       -
CW    1+3*MULT=NUMBER OF WORDS                                          -
C                                                                       -
CD    HNAME          HOLLERITH FILE NAME - ATFLUX - (A6)                -
CD    HUSE(I)        HOLLERITH USER IDENTIFICATION (A6)                 -
CD    IVERS          FILE VERSION NUMBER                                -
C                                                                       -
CD    MULT           DOUBLE-PRECISION PARAMETER                         -
CD                       1- A6 WORD IS SINGLE WORD                      -
CD                       2- A6 WORD IS DOUBLE PRECISION WORD            -
C                                                                       -
C-------------------------------------------------------------------


C-------------------------------------------------------------------
CR          SPECIFICATIONS   (1D RECORD)                                -
C                                                                       -
CL    NDIM,NGROUP,NINTI,NINTJ,NINTK,ITER,EFFK,ADUM                      -
C                                                                       -
CW    8=NUMBER OF WORDS                                                 -
C                                                                       -
CD    NDIM           NUMBER OF DIMENSIONS                               -
CD    NGROUP         NUMBER OF ENERGY GROUPS                            -
CD    NINTI          NUMBER OF FIRST DIMENSION FINE MESH INTERVALS      -
CD    NINTJ          NUMBER OF SECOND DIMENSION FINE MESH INTERVALS     -
CD    NINTK          NUMBER OF THIRD DIMENSION FINE MESH INTERVALS,     -
CD                   NINTK.EQ.1 IF NDIM.LE.2                            -
C                                                                       -
CN          FOR MESHPOINT EDGE LOCATIONS, NINTI, NINTJ, AND NINTK ARE  *-
CN          INTERPRETED AS THE NUMBER OF POINTS (ONE MORE THAN THE     *-
CN          NUMBER OF INTERVALS)                                       *-
CN          FOR SPECIAL TRIANGULAR GEOMETRIES, NINTI IS THE NUMBER OF  *-
CN          POINTS ON EACH PLANE, AND NINTJ IS SET TO 1.               *-
C                                                                       -
```

(CONT)

```
CD    ITER          OUTER ITERATION NUMBER AT WHICH FLUX WAS WRITTEN    -
CD                  MADE NEGATIVE FOR MESH EDGE POINTS                 *-
CD                  SET TO ZERO IF FIXED SOURCE ADJOINT FLUXES         *-
CD                  (DOMINANT HARMONIC) HAVE BEEN CORRECTED FOR        *-
CD                  FUNDAMENTAL CONTAMINATION                          *-
CD    EFFK          EFFECTIVE MULTIPLICATION FACTOR                     -
CD    ADUM          ZERO FOR NON FIXED SOURCE PROBLEM                  *-
CD                  SUM FIXED SOURCE IF FIXED SOURCE PROBLEM           *-
C                                                                       -
C-----------------------------------------------------------------------


C-----------------------------------------------------------------------
CR          ONE DIMENSIONAL ADJOINT TOTAL FLUX   (2D RECORD)            -
C                                                                       -
CC          PRESENT IF NDIM.EQ.1                                        -
C                                                                       -
CL    ((FADJ(I,J),I=1,NINTI),J=1,NGROUP)                                -
C                                                                       -
CW    NINTI*NGROUP*MULT=NUMBER OF WORDS                                 -
C                                                                       -
CD    FADJ(I,J)     ONE DIMENSIONAL ADJOINT TOTAL FLUX BY INTERVAL      -
CD                  AND GROUP                                           -
C                                                                       -
C-----------------------------------------------------------------------


C-----------------------------------------------------------------------
CR          MULTI-DIMENSIONAL ADJOINT TOTAL FLUX   (3D RECORD)          -
C                                                                       -
CC          PRESENT IF NDIM.GE.2                                        -
C                                                                       -
CL    ((FADJ(I,J),I=1,NINTI),J=1,NINTJ)-----NOTE STRUCTURE BELOW-----   -
C                                                                       -
CW    NINTI*NINTJ*MULT=NUMBER OF WORDS                                  -
C                                                                       -
CS    DO 1 L=1,NGROUP                                                   -
CS    DO 1 K=1,NINTK                                                    -
CS  1 READ(N)     *LIST AS ABOVE*                                       -
C                                                                       -
CD    FADJ(I,J)     MULTI-DIMENSIONAL ADJOINT TOTAL FLUX                -
CD                  BY INTERVAL FOR EACH GROUP                          -
C                                                                       -
C-----------------------------------------------------------------------

C***********************************************************************-
C                                                                       -
CEOF        ATFLUX                                                      -
C                                                                       -
C***********************************************************************-
```

SPECIFICATIONS FOR INTERFACE FILE RZFLUX

```
C*********************************************************************-
C                     REFERENCE 02/01/79 ORNL-5180                    -
C                                                                     -
CF          RZFLUX                                                    -
C                                                                     -
CE          REGULAR ZONE FLUX BY GROUP, AVERAGED OVER EACH ZONE       -
C                                                                     -
CN          AN ASTERISK IN COLUMN 72 INDICATES LOCAL MODIFICATION     -
C                                                                     -
C*********************************************************************-

C---------------------------------------------------------------------
CR          FILE IDENTIFICATION                                       -
C                                                                     -
CL    HNAME,(HUSE(I),I=1,2),IVERS                                     -
C                                                                     -
CW          3*MULT + 1                                                -
C                                                                     -
CD    HNAME         FILE NAME (A6) 'RZFLUX'                           -
CD    HUSE          USER IDENTIFICATION (A6)                          -
CD    IVERS         FILE VERSION NUMBER                               -
C                                                                     -
CN    MULT          1 FOR LONG WORD, 2 FOR SHORT WORD MACHINES        -
C                                                                     -
C---------------------------------------------------------------------


C---------------------------------------------------------------------
CR    1D    FILE REFERENCE INFORMATION                                -
C                                                                     -
CL    TIME,POWER,VOL,EFFK,EIVS,DKDS,TNL,TNA,TNSL,TNBL,TNBAL,TNCRA,    -
CL    CF,CE,CR,CC,ITPS,NZONE,NGROUP,NPV                               -
C                                                                     -
CW          20                                                        -
C                                                                     -
CD    TIME          REFERENCE REAL TIME, DAYS                         -
CD    POWER         POWER LEVEL FOR ACTUAL NEUTRONICS PROBLEM, WATTS  -
CD                      THERMAL                                       -
CD    VOL           VOLUME OVER WHICH POWER WAS DETERMINED, CC        -
CD    EFFK          MULTIPLICATION FACTOR                             -
CD    EIVS          EIGENVALUE OF SEARCH OF SEARCH PROBLEM            -
CD    DKDS          DERIVATIVE OF SEARCH PROBLEM                      -
CD    TNL           TOTAL NEUTRON LOSSES                              -
CD    TNA           TOTAL NEUTRON ABSORPTIONS                         -
CD    TNSL          TOTAL NEUTRON SURFACE LEAKAGE                     -
CD    TNBL          TOTAL NEUTRON BUCKLING LOSS                       -
CD    TNBAL         TOTAL NEUTRON BLACK ABSORBER LOSS                 -
CD    TNCRA         TOTAL NEUTRON CONTROL ROD ABSORPTIONS             -
```

(CONT)

```
CD     CF            FRACTION OF CORE TREATED IN PROBLEM                  *-
CD     CE            CONVERSION FACTOR, RATIO OF THERMAL ENERGY TO        *-
CD                   FISSION + CAPTURE ENERGY AVAILABLE WITH              *-
CD                   THE CROSS SECTIONS                                   *-
CD     CR            ADDITIONAL DATA FLAG IF .GT.0 (TWO RECORDS)          *-
CD     CC            RESERVED                                              -
CD     ITPS          ITERATIVE PROCESS STATE                               -
CD                       =0, NO ITERATIONS DONE                            -
CD                       =1, CONVERGENCE SATISFIED                         -
CD                       =2, NOT CONVERGED, BUT CONVERGING                 -
CD                       =3, NOT CONVERGED, NOT CONVERGING                 -
CD     NZONE         NUMBER OF GEOMETRIC ZONES                             -
CD     NGROUP        NUMBER OF NEUTRON ENERGY GROUPS                       -
CD     NPV           NUMBER OF BLOCKS OF LOCAL, FINE-SCALE FLUX VALUES    *-
C                                                                          -
C-----------------------------------------------------------------------------


C-----------------------------------------------------------------------------
CR     2D     FLUX VALUES                                                   -
C                                                                          -
CL     ((ZGF(K,M),K=1,NGROUP),M=1,NZONE)                                   -
C                                                                          -
CW            NGROUP*NZONE                                                 -
C                                                                          -
CD     ZGF           REGULAR ZONE FLUX BY GROUP, AVERAGED OVER ZONE        -
CD                   NEUTRONS/SEC-CM**2                                    -
C                                                                          -
C-----------------------------------------------------------------------------


C-----------------------------------------------------------------------------
CR     3D     ADDITIONAL DATA, FIRST OF TWO RECORDS                        *-
C                                                                          *-
CC            PRESENT IF CR .GT.0                                          *-
C                                                                          *-
CL     (SHARE8(I),I=1,100),(SHARE(I),I=1,100),(LX(I),I=1,200)              *-
C                                                                          *-
CW            100*MULT + 300                                               *-
C                                                                          *-
CD     SHARE8        NEUTRONICS DATA FOR REFERENCE                        *-
C                      DOUBLE PRECISION ON A SHORT WORD MACHINE            *-
CD     SHARE         NEUTRONICS DATA FOR REFERENCE                        *-
CD     LX            NEUTRONICS FLAGS FOR REFERENCE                       *-
C                                                                          *-
C-----------------------------------------------------------------------------
```

(CONT)

```
C-----------------------------------------------------------------------
CR     4D     ADDITIONAL DATA, SECOND OF TWO RECORDS                    *-
C                                                                       *-
CC            PRESENT IF CR .GT.0                                       *-
C                                                                       *-
CL     (INRS(I),I=1,NGROUP),(RHO(I),I=1,NGROUP),(BATA(I),I=1,NGROUP)    *-
C                                                                       *-
CW            3*NGROUP                                                  *-
C                                                                       *-
CD     INRS           NEUTRONICS ITERATION FLAGS                       *-
CD     RHO            NEUTRONICS ITERATION DATA                        *-
CD     BATA           NEUTRONICS ITERATION DATA                        *-
C                                                                       *-
CN            NOTE NONSTANDARD DATA TYPE ORDER                          *-
C                                                                       *-
C-----------------------------------------------------------------------
                                                                        *
      THERE ARE NPV SETS OF THE FOLLOWING TWO RECORDS                   *
                                                                        *
C-----------------------------------------------------------------------
CR     5D     LOCAL FLUX RECORD REFERENCE DATA                          *-
C                                                                       *-
CL     (XFV(I),I=1,10),NLP,NRZ,(IFV(J),J=1,8)                           *-
C                                                                       *-
CW            20                                                        *-
C                                                                       *-
CD     XFV(1)         REFERENCE VOLUME, CC                             *-
CD     XFV(2)         REFERENCE POWER LEVEL, WATTS                     *-
CD     NLP            NUMBER OF LOCATIONS FOR WHICH DATA IS GIVEN      *-
CD     NRZ            REFERENCE ZONE NUMBER                            *-
C                                                                       *-
C-----------------------------------------------------------------------


C-----------------------------------------------------------------------
CR     6D     LOCAL NEUTRON FLUX VALUES                                 *-
C                                                                       *-
CL     ((FLF(K,M),K=1,NGROUP),M=1,NLP)                                  *-
C                                                                       *-
CW            NGROUP*NLP                                                *-
C                                                                       *-
CD     FLF            LOCAL VALUE OF THE NEUTRON TOTAL FLUX,           *-
CD                     AS ASSOCIATED WITH A SUB-VOLUME WITHIN THE       *-
CD                     REFERENCE ZONE NRZ                               *-
C                                                                       *-
C-----------------------------------------------------------------------

C***********************************************************************-
C                                                                       -
CEOF          RZFLUX                                                    -
C                                                                       -
C***********************************************************************-
```

SPECIFICATIONS FOR INTERFACE FILE FIXSRC

```
C*********************************************************************-
C                        REVISED 07/23/75 - REVISED 04/01/80            -
C                                                                       -
CF          FIXSRC                                                      -
C                                                                       -
CE          DISTRIBUTED AND SURFACE FIXED SOURCES                       -
C                                                                       -
C*********************************************************************-

C-----------------------------------------------------------------------
CR          FILE IDENTIFICATION                                         -
C                                                                       -
CL    HNAME,(HUSE(I),I=1,2),IVERS                                       -
C                                                                       -
CW    1+3*MULT=NUMBER OF WORDS                                          -
C                                                                       -
CD    HNAME          HOLLERITH FILE NAME - FIXSRC - (A6)                -
CD    HUSE(I)        HOLLERITH USER IDENTIFICATION (A6)                 -
CD    IVERS          FILE VERSION NUMBER                                -
CD    MULT           DOUBLE PRECISION PARAMETER                         -
CD                    1- A6 WORD IS SINGLE WORD                         -
CD                    2- A6 WORD IS DOUBLE PRECISION WORD               -
C                                                                       -
C-----------------------------------------------------------------------


C-----------------------------------------------------------------------
CR          SPECIFICATIONS (1D RECORD)                                  -
C                                                                       -
CL    ITYPE,NDIM,NGROUP,NINTI,NINTJ,NINTK,IDISTS,NDCOMP,NSCOMP,NEDGI,   -
CL    NEDGJ,NEDGK                                                       -
C                                                                       -
CW    12=NUMBER OF WORDS                                                -
C                                                                       -
CD    ITYPE              TYPE SOURCE.                                   -
CD                        0=DIFFUSION                                   -
CD                        1=SN                                          -
CD    NDIM               NUMBER OF DIMENSIONS                           -
CD    NGROUP             NUMBER OF GROUPS                               -
CD    NINTI              NUMBER OF FIRST DIMENSION FINE MESH INTERVALS  -
CD    NINTJ              NUMBER OF SECOND DIMENSION FINE MESH INTERVALS -
CD    NINTK              NUMBER OF THIRD DIMENSION FINE MESH INTERVALS  -
C                                                                       -
CN          FOR MESHPOINT EDGE LOCATIONS, NINTI, NINTJ, AND NINTK ARE  *-
CN          INTERPRETED AS THE NUMBER OF POINTS (ONE MORE THAN THE     *-
CN          NUMBER OF INTERVALS)                                       *-
CN          FOR SPECIAL TRIANGULAR GEOMETRIES, NINTI IS THE NUMBER OF  *-
CN          POINTS ON EACH PLANE, AND NINTJ IS SET TO 1.               *-
C                                                                       -
```

(CONT)

```
CD    IDISTS            DISTRIBUTED SOURCE FLAG.                          -
CD                       0= NO DISTRIBUTED SOURCE GIVEN.                  -
CD                       1= DISTRIBUTED SOURCE IS GIVEN BY POINT         *-
CD                       2= DISTRIBUTED SOURCE IS GIVEN BY ZONE          *-
CD                       3= SAME AS 1 BUT AN ADDITIONAL RECORD IS        *-
CD                          PRESENT AT END OF DATA                       *-
CD                       4= SAME AS 2 BUT AN ADDITIONAL RECORD IS        *-
CD                          PRESENT AT END OF DATA                       *-
CD    NDCOMP            NUMBER OF DISTRIBUTED SOURCE COMPONENTS           -
CD                      = NUMBER OF ZONES IF IDISTS IS 2 OR 4            *-
CD    NSCOMP            NUMBER OF SURFACE SOURCE COMPONENTS (0)          *-
CD    NEDGI             NUMBER OF FIRST DIMENSION BOUNDARY SOURCES (0)  *-
CD    NEDGJ             NUMBER OF SECOND DIMENSION BOUNDARY SOURCES (0) *-
CD    NEDGK             NUMBER OF THIRD DIMENSION BOUNDARY SOURCES (0)  *-
C                                                                         -
C-------------------------------------------------------------------------

C-------------------------------------------------------------------------
CR          ONE-DIMENSIONAL DISTRIBUTED FIXED SOURCE (2D RECORD)          -
C                                                                         -
CC          PRESENT IF NDIM.EQ.1 AND IDISTS IS 1 OR 3                    *-
C                                                                         -
CL    ((QDIST(L,I),L=1,NDCOMP),I=1,NINTI)---NOTE STRUCTURE BELOW---       -
C                                                                         -
CW    NDCOMP*NINTI=NUMBER OF WORDS                                        -
C                                                                         -
CS    DO 1 J=1,NGROUP                                                     -
CS  1 READ (N) *LIST AS ABOVE*                                            -
C                                                                         -
CD    QDIST(L,I)        DISTRIBUTED SOURCE TIMES POINT VOLUME(CC)       *-
CD                      BY COMPONENT, INTERVAL, AND GROUP               *-
C                                                                         -
C-------------------------------------------------------------------------

C-------------------------------------------------------------------------
CR          MULTI-DIMENSIONAL DISTRIBUTED FIXED SOURCE (3D RECORD)        -
C                                                                         -
CC          PRESENT IF NDIM.GE.2 AND IDISTS IS 1 OR 3                    *-
C                                                                         -
CL    ((QDIST(I,J),I=1,NINTI),J=1,NINTJ)---NOTE STRUCTURE BELOW---        -
C                                                                         -
CW    NINTI*NINTJ=NUMBER OF WORDS                                         -
C                                                                         -
CS    DO 1 N=1,NGROUP                                                     -
CS    DO 1 L=1,NDCOMP                                                     -
CS    DO 1 K=1,NINTK                                                      -
CS  1 READ (N) *LIST AS ABOVE*                                            -
C                                                                         -
CD    QDIST(I,J)        AS DEFINED ABOVE.                                 -
C                                                                         -
C-------------------------------------------------------------------------
```

(CONT)

```
C-----------------------------------------------------------------------
CR          FIRST DIMENSION SURFACE SOURCE POINTERS (4D RECORD)         -
C                                                                       -
CC          PRESENT IF NEDGI.NE.0                                       -
C                                                                       -
CN          NOT ALLOWED IN VENTURE                                      -
C                                                                       -
C-----------------------------------------------------------------------

C-----------------------------------------------------------------------
CR          FIRST DIMENSION SURFACE SOURCES (5D RECORD)                 -
C                                                                       -
CC          PRESENT IF NEDGI.NE.0                                       -
C                                                                       -
CN          NOT ALLOWED IN VENTURE                                      -
C                                                                       -
C-----------------------------------------------------------------------

C-----------------------------------------------------------------------
CR          SECOND DIMENSION SURFACE SOURCE POINTERS (6D RECORD)        -
C                                                                       -
C           PRESENT IF NDIM.GE.2 AND NEDGJ.NE.0                         -
C                                                                       -
CN          NOT ALLOWED IN VENTURE                                      -
C                                                                       -
C-----------------------------------------------------------------------

C-----------------------------------------------------------------------
CR          SECOND DIMENSION SURFACE SOURCES (7D RECORD)                -
C                                                                       -
CC          PRESENT IF NDIM.GE.2 AND NEDGJ.NE.0                         -
C                                                                       -
CN          NOT ALLOWED IN VENTURE                                      -
C                                                                       -
C-----------------------------------------------------------------------

C-----------------------------------------------------------------------
CR          THIRD DIMENSION SURFACE SOURCE POINTERS (8D RECORD)         -
C                                                                       -
CC          PRESENT IF NDIM.EQ.3 AND NEDGK.NE.0                         -
C                                                                       -
CN          NOT ALLOWED IN VENTURE                                      -
C                                                                       -
C-----------------------------------------------------------------------

C-----------------------------------------------------------------------
CR          THIRD DIMENSION SURFACE SOURCES (9D RECORD)                 -
C                                                                       -
CC          PRESENT.IF NDIM.EQ.3 AND NEDGK.NE.0                         -
C                                                                       -
CN          NOT ALLOWED IN VENTURE                                      -
C                                                                       -
C-----------------------------------------------------------------------
```

(CONT)

```
C-----------------------------------------------------------------------
CR          SOURCE BY ZONE AND GROUP  (10D RECORD)                     *-
C                                                                      *-
CC          PRESENT IF IDISTS IS 2 OR 4                                *-
C                                                                      *-
CL    ((ZSOR(L,N),L=1,NDCOMP),N=1,NGROUP)                              *-
C                                                                      *-
CW    NDCOMP*NGROUP=NUMBER OF WORDS                                    *-
C                                                                      *-
CD    ZSOR(L,N)          SOURCE BY ZONE AND GROUP - NOT MULTIPLIED     *-
CD                       BY ZONE VOLUME                                *-
C                                                                      *-
C-----------------------------------------------------------------------

C-----------------------------------------------------------------------
C           ADDITIONAL RECORD IF IDISTS IS 3 OR 4 (11D RECORD)         *-
C                                                                      *-
CL    (R(N),N=1,20)                                                    *-
C                                                                      *-
CW    20=NUMBER OF WORDS                                               *-
C                                                                      *-
CD    R(1)               KEFFECTIVE                                    *-
C                                                                      *-
C-----------------------------------------------------------------------

C***********************************************************************-
C                                                                       -
CEOF        FIXSRC                                                      -
C                                                                       -
C***********************************************************************-
```

SPECIFICATIONS FOR INTERFACE FILE SEARCH

```
C*********************************************************************-
C                        REVISED 07/22/75 - REVISED 04/01/80            -
C                                                                       -
CF          SEARCH -III                                                 -
C                                                                       -
CE          CRITICALITY SEARCH FILE                                     -
C                                                                       -
C*********************************************************************-

C-----------------------------------------------------------------------
CR          FILE IDENTIFICATION                                         -
C                                                                       -
CL    HNAME,(HUSE(I),I=1,2),IVERS                                       -
C                                                                       -
CW    1+3*MULT=NUMBER OF WORDS                                          -
C                                                                       -
CD    HNAME              HOLLERITH FILE NAME - SEARCH - (A6)            -
CD    HUSE(I)            HOLLERITH USER IDENTIFICATION (A6)             -
CD    IVERS              FILE VERSION NUMBER                            -
CD    MULT               DOUBLE PRECISION PARAMETER                     -
CD                        1- A6 WORD IS SINGLE WORD                      -
CD                        2- A6 WORD IS DOUBLE PRECISION WORD            -
C                                                                       -
C-----------------------------------------------------------------------


C-----------------------------------------------------------------------
CR          INDIVIDUAL DATA SET IDENTIFIER (1D RECORD)                  -
C                                                                       -
CL    NSHID,NREC,(NSP(I),I=1,18)                                        -
C                                                                       -
CW    20=NUMBER OF WORDS                                                -
C                                                                       -
CD    NSHID              POSITIVE INTEGER IDENTIFYING A SET OF SEARCH   -
CD                        DATA, THIS AND FOLLOWING RECORDS REPEATED      -
CD                        UNTIL NEGATIVE NSHID TERMINATES FILE           -
CD    NREC               NUMBER OF RECORDS TO SKIP TO POSITION ON NEXT  -
CD                        INDIVIDUAL DATA SET IDENTIFIER RECORD          -
CD    NSP(I)             RESERVED                                       -
C                                                                       -
C-----------------------------------------------------------------------


C-----------------------------------------------------------------------
CR          FILE SPECIFICATIONS        (2D RECORD)                      -
C                                                                       -
CL    EFFK,DKEFF,EPSK,EPSEI,CMOD,(SRCH(I),I=1,5),ISRCH,ISZOP,NMAXNP,    -
CL    NCINTI,NCINTJ,NCINTK,NISOSR,NSETS,NEIRNG,ITEND,ICEND,             -
CL     (NRCH(I),I=1,19)                                                 -
C                                                                       -
CW    40=NUMBER OF WORDS                                                -
C                                                                       -
CD    EFFK               DESIRED MULTIPLICATION FACTOR                  -
CD    DKEFF              MULTIPLICATION FACTOR SLOPE                    -
```

(CONT)

```
CD    EPSK              CONVERGENCE CRITERION TO BE MET BY EFFK        -
CD    EPSEI             CONVERGENCE CRITERION TO BE MET BY PRIMARY     -
CD                       VARIABLE                                      -
CD    CMOD              MODIFIER APPLIED TO NUCLIDE CONCENTRATIONS     -
CD                       VARIED SPECIALLY (ISRCH=7 BELOW),MAY BE       -
CD                       .LT.0                                         -
CD    SRCH(I)           RESERVED                                       -
CD    ISRCH             TYPE OF SEARCH                                 -
CD                       0- NOT DEFINED                                -
CD                       1- BUCKLING SEARCH                            -
CD                       2- ALPHA SEARCH                               -
CD                       5- DIMENSION SEARCH                           -
CD                       7- NUCLIDE CONCENTRATION SEARCH BY            -
CD                       PROPORTIONAL ADJUSTMENTS OF SELECTED          -
CD                       INITIAL CONCENTRATIONS                        -
CD                       9- NUCLIDE CONCENTRATION SEARCH BY ADDING     -
CD                       WEIGHTED EIGENVALUE ADJUSTMENTS               -
CD                       TO SELECTED INITIAL CONCENTRATIONS            -
CD    ISZOP             SUBZONE OPTION FOR ISRCH = 7 OR 9              -
CD                       0- SEARCH DATA IS BY ZONE                     -
CD                       1- SEARCH DATA IS BY SUBZONE                  -
CD    NMAXNP            MAXIMUM NUMBER OF NEUTRONICS PROBLEMS OR TRIAL -
CD                       EIGENVALUES ALLOWED IN A SEARCH. A ZERO       -
CD                       HERE SPECIFIES A DIRECT SEARCH.               -
CD    NCINTI            NUMBER OF FIRST DIMENSION COARSE MESH INTERVALS -
CD    NCINTJ            NUMBER OF SECOND DIMENSION COARSE MESH         -
CD                       INTERVALS                                     -
CD    NCINTK            NUMBER OF THIRD DIMENSION COARSE MESH INTERVALS -
CD    NISOSR            NUMBER OF ISOTOPES OR NUCLIDES INVOLVED IN     -
CD                       CONCENTRATION SEARCH (ISRCH = 7 OR 9)         -
CD    NSETS             NUMBER OF SPECIFICATION SETS IN CONCENTRATION  -
CD                       SEARCH (ISRCH = 7 OR 9)                       -
CD    NEIRNG            EIGENVALUE (EI) RANGE RESTRICTIONS. SEARCH     -
CD                       TERMINATED IF SPECIFIED RANGE IS VIOLATED.    -
CD                       -1 EI.LT.0                                    -
CD                       0- NO RESTRICTION ON EI                       -
CD                       1- EI.GT.0 AND .LT.1                          -
CD                       2- EI.GT.1                                    -
CD    ITEND             TERMINATION OPTION ON ITERATIVE PROCESS. SEARCH -
CD                       IS LIMITED BY NMAXNP,NUMBER OF OUTER          -
CD                       ITERATIONS,OR OTHER PARAMETER,THEN            -
CD                       0- NO RESTRAINT                               -
CD                       1- TERMINATE IF CONVERGENCE CRITERIA ARE      -
CD                       NOT MET                                       -
CD                       2- IF CONVERGENCE CRITERIA ARE NOT MET,       -
CD                       TERMINATE ONLY IF PROBLEM IS NOT              -
CD                       CONVERGING.                                   -
CD    ICEND             TERMINATION OPTIONS ON NUCLIDE CONCENTRATIONS  -
CD                       0- TERMINATE IF ANY NUCLIDE CONCENTRATION     -
CD                       BECOMES NEGATIVE AT ANY STAGE OF THE          -
CD                       CALCULATION                                   -
CD                       1- TERMINATE IF ANY NUCLIDE CONCENTRATION     -
CD                       IS NEGATIVE AT THE END OF THE SEARCH          -
CD                       2- ALLOW NEGATIVE NUCLIDE CONCENTRATIONS      -
```

(CONT)

```
CD     NRCH(1)              .GT.0 - INDICATES THAT MACROSCOPIC CROSS      *-
CD                          SECTIONS ARE TO BE RECALCULATED DURING        *-
CD                          A DIRECT SEARCH                               *-
CD     NRCH(2)              .GT.0 - INDICATES SECONDARY SEARCH            *-
CD                          SPECIFICATIONS (REFERENCE SET) ARE TO BE USED *-
CD                          IF THE SPECIFIED CONSTRANTS ON THE SEARCH     *-
CD                          EIGENVALUE ARE NOT SATISFIED USING THE        *-
CD                          PRIMARY SEARCH DATA                           *-
CD     NRCH(3-19)          RESERVED                                       *-
C                                                                          -
C-------------------------------------------------------------------------

C-------------------------------------------------------------------------
CR           COARSE MESH MODIFIERS FOR DIMENSION SEARCH                    -
CR                          (3D RECORD)                                    -
C                                                                          -
CC           PRESENT IF ISRCH.EQ.5                                         -
C                                                                          -
CL     (SRHDI(I),I=1,NCINTI),(SRHDJ(J),J=1,NCINTJ),(SRHDK(K),K=1,NCINTK)  -
C                                                                          -
CW     NCINTI+NCINTJ+NCINTK=NUMBER OF WORDS                                -
C                                                                          -
CD     SRHDI(I)            FIRST DIMENSION COARSE MESH MODIFIERS          -
CD     SRHDJ(J)            SECOND DIMENSION COARSE MESH MODIFIERS         -
CD     SRHDK(K)            THIRD DIMENSION COARSE MESH MODIFIERS          -
C                                                                          -
C-------------------------------------------------------------------------

C-------------------------------------------------------------------------
CR           NUCLIDES FOR PROPORTIONAL SEARCH AND SPECIAL SEARCH           -
CR                          (4D RECORD)                                    -
C                                                                          -
CC           PRESENT IF ISRCH.EQ.7                                         -
C                                                                          -
CL     (NSHZ1(I),I=1,NSETS),(NSHZ2(I),I=1,NSETS),                          -
CL     ((HNNAMS(N,I),N=1,NISOSR),I=1,NSETS),(HNSHN(J),J=1,10)              -
C                                                                          -
CW     2*NSETS+MULT*(NISOSR*NSETS+10)=NUMBER OF WORDS                      -
C                                                                          -
CD     NSHZ1(I)            FIRST NUMBER OF A CONSECUTIVE SET OF ZONES     -
CD                          IF ISZOP.EQ.0, OR OF A CONSECUTIVE SET OF      -
CD                          SUBZONES IF ISZOP.EQ.1                         -
CD     NSHZ2(I)            LAST NUMBER OF A SET OF ZONES OR SUBZONES      -
CD     HNNAMS(N,I)         REFERENCE NAMES OF NUCLIDES WHOSE              -
CD                          CONCENTRATIONS ARE TO BE ADJUSTED              -
CD                          PROPORTIONATELY IN ABOVE ZONES (A6)            -
CD     HNSHN(J)            SEARCH NUCLIDE REFERENCE USED AS NOTED BELOW   -
CD                          (A6)                                           -
C                                                                          -
```

(CONT)

```
CC                      HNNAMS CONCENTRATIONS ADJUSTED ACCORDING TO     -
CC                      C2 = C1*EI AND HNSHN CONCENTRATIONS ADJUSTED    -
CC                      ACCORDING TO C2 =C1 + C1*(1.0-EI)*CMOD WHERE    -
CC                       EI IS THE EIGENVALUE.                          -
CC                       C1 IS THE INITIAL CONCENTRATION, AND           -
CC                       C2 IS THE FINAL OR INTERMEDIATE VALUE OF       -
CC                       THE CONCENTRATION                              -
C                                                                       -
C-----------------------------------------------------------------------

C-----------------------------------------------------------------------
CR          NUCLIDES FOR SEARCH INVOLVING WEIGHTED EIGENVALUE           -
CR           ADJUSTMENTS TO INITIAL CONCENTRATIONS                      -
CR           (5D RECORD)                                                -
C                                                                       -
CC          PRESENT IF ISRCH.FQ.9                                       -
C                                                                       -
CL    (NSHZ1(I),I=1,NSETS),(NSHZ2(I),I=1,NSETS),                        -
CL    ((HNNAMS(N,I),N=1,NISOSR),I=1,NSETS),                             -
CL    ((CHZDN(N,I),N=1,NISOSR),I=1,NSETS)                               -
C                                                                       -
CW    NSETS*(2+NISOSR*(1+MULT))=NUMBER OF WORDS                         -
C                                                                       -
CD    NSHZ1(I)          FIRST NUMBER OF A CONSECUTIVE SET OF ZONES      -
CD                       IF ISZOP.EQ.0, OR OF A CONSECUTIVE SET OF      -
CD                       SUBZONES IF ISZOP.EQ.1                         -
CD    NSHZ2(I)          LAST NUMBER OF A SET OF ZONES OR SUBZONES       -
CD    HNNAMS(N,I)       REFERENCE NAMES OF NUCLIDES WHOSE               -
CD                       CONCENTRATIONS ARE TO BE ADJUSTED              -
CD    CHZDN(N,I)        CONCENTRATION MODIFIERS                         -
C                                                                       -
CC                      CONCENTRATIONS ADJUSTED ACCORDING TO            -
CC                       C2 = C1+EI*CHZDN WHERE EI, C1, AND C2 ARE      -
CC                       AS DEFINED UNDER ISRCH .EQ. 7                  -
C                                                                       -
C-----------------------------------------------------------------------

C***********************************************************************-
C                                                                       -
CEOF        SEARCH                                                      -
C                                                                       -
C***********************************************************************-
```

SPECIFICATIONS FOR INTERFACE FILE DLAYXS

```
C*********************************************************************-
C                        REVISED 07/23/75                             -
C                                                                     -
CF          DLAYXS - III                                              -
C                                                                     -
CE          MICROSCOPIC GROUP DELAYED NEUTRON PRECURSOR DATA          -
C                                                                     -
CN                       THIS FILE PROVEDES PRECURSOR YIELDS,         -
CN                       EMISSION SPECTRA, AND DECAY CONSTANTS        -
CN                       ORDERED BY ISOTOPE. ISOTOPES ARE IDENTIFIED  -
CN                       BY ABSOLUTE ISOTOPE LABELS FOR RELATION TO   -
CN                       ISOTOPES IN EITHER FILE ISOTXS OR GRUPXS.    -
C                                                                     -
C*********************************************************************-

C---------------------------------------------------------------------
CS          FILE STRUCTURE                                            -
CS                                                                    -
CS             RECORD TYPE                          PRESENT IF        -
CS             ==============================       ==============    -
CS             FILE IDENTIFICATION                  ALWAYS            -
CS             FILE CONTROL                         ALWAYS            -
CS             FILE DATA, DECAY CONSTANTS, AND                        -
CS                EMISSION SPECTRA                  ALWAYS            -
CS   *************(REPEAT TO NISOD)                                  -
CS   *         DELAYED NEUTRON PRECURSOR                              -
CS   *            YIELD DATA                        ALWAYS            -
CS   *************                                                   -
C                                                                     -
C---------------------------------------------------------------------

C---------------------------------------------------------------------
CR          FILE IDENTIFICATION                                       -
C                                                                     -
CL    HNAME,(HUSE(I),I=1,2),IVERS                                     -
C                                                                     -
CW    1+3*MULT=NUMBER OF WORDS                                        -
C                                                                     -
CD    HNAME          HOLLERITH FILE NAME - DLAYXS - (A6)              -
CD    HUSE(I)        HOLLERITH USER IDENTIFICATION (A6)               -
CD    IVERS          FILE VERSION NUMBER                              -
CD    MULT           DOUBLE-PRECISION PARAMETER                       -
CD                       1- A6 WORD IS SINGLE WORD                    -
CD                       2- A6 WORD IS DOUBLE PRECISION WORD          -
C                                                                     -
C---------------------------------------------------------------------

C---------------------------------------------------------------------
CR          FILE CONTROL     (1D RECORD)                              -
C                                                                     -
CL    NGROUP,NISOD,NFAM,IDUM                                          -
C                                                                     -
CW    4=NUMBER OF WORDS                                               -
C                                                                     -
```

(CONT)

```
CD     NGROUP          NUMBER OF NEUTRON ENERGY GROUPS IN SET                -
CD     NISOD           NUMBER OF ISOTOPES IN DELAYED NEUTRON SET             -
CD     NFAM            NUMBER OF DELAYED NEUTRON FAMILIES IN SET             -
CD     IDUM            DUMMY TO MAKE UP FOUR WORD RECORD.                    -
C                                                                            -
C-----------------------------------------------------------------------------

C-----------------------------------------------------------------------------
CR           FILE DATA, DECAY CONSTANTS, AND EMISSION SPECTRA                -
CR                              (2D RECORD)                                  -
C                                                                            -
CL     (HABSID(I),I=1,NISOD),(FLAM(N),N=1,NFAM),((CHID(J,N),J=1,NGROUP),     -
CL     N=1,NFAM),(EMAX(J),J=1,NGROUP),EMIN,(NKFAM(I),I=1,NISOD),             -
CL     (LOCA(I),I=1,NISOD)                                                   -
C                                                                            -
CW     (2+MULT)*NISOD+(NGROUP+1)*(NFAM+1)=NUMBER OF WORDS                    -
C                                                                            -
CD     HABSID(I)       HOLLERITH ABSOLUTE ISOTOPE LABEL FOR ISOTOPE I (A6)   -
CD     FLAM(N)         DELAYED NEUTRON PRECURSOR DECAY CONSTANT              -
CD                        FOR FAMILY N                                       -
CD     CHID(J,N)       FRACTION OF DELAYED NEUTRONS EMITTED INTO NEUTRON     -
CD                        ENERGY GROUP J FROM PRECURSOR FAMILY N             -
CD     EMAX(J)         MAXIMUM ENERGY BOUND OF GROUP J (EV)                  -
CD     EMIN            MINIMUM ENERGY BOUND OF SET (EV)                      -
CD     NKFAM(I)        NUMBER OF FAMILIES TO WHICH FISSION IN ISOTOPE I      -
CD                        CONTRIBUTES DELAYED NEUTRON PRECURSORS             -
CD     LOCA(I)         NUMBER OF RECORDS TO BE SKIPPED TO READ DATA FOR      -
CD                        ISOTOPE I, LOCA(1)=0                               -
C                                                                            -
C-----------------------------------------------------------------------------

C-----------------------------------------------------------------------------
CR           DELAYED NEUTRON PRECURSOR YIELD DATA  (3D RECORD)               -
C                                                                            -
CL     ((SNUDEL(J,K),J=1,NGROUP),K=1,NKFAMI),(NUMFAM(K),K=1,NKFAMI)          -
C                                                                            -
CC     NKFAMI=NKFAM(I)                                                       -
C                                                                            -
CW     (NGROUP+1)*NKFAMI=NUMBER OF WORDS                                     -
C                                                                            -
CD     SNUDEL(J,K)     NUMBER OF DELAYED NEUTRON PRECUSORS PRODUCED IN       -
CD                        FAMILY NUMBER NUMFAM(K) PER FISSION IN             -
CD                        GROUP J                                            -
CD     NUMFAM(K)       FAMILY NUMBER OF THE K-TH YIELD VECTOR IN             -
CD                        ARRAY SNUDEL(J,K)                                  -
C                                                                            -
C-----------------------------------------------------------------------------

C*****************************************************************************-
C                                                                            -
CEOF         DLAYXS                                                          -
C                                                                            -
C*****************************************************************************-
```

SPECIFICATIONS FOR INTERFACE FILE PWDINT

```
C*********************************************************************-
C                        REVISED 07/23/75 - REVISED 04/01/80            -
C                                                                       -
CF          PWDINT                                                      -
C                                                                       -
CE          POWER DENSITY BY INTERVAL                                   -
C                                                                       -
C*********************************************************************-

C-----------------------------------------------------------------------
CR          FILE IDENTIFICATION                                         -
C                                                                       -
CL    HNAME,(HUSE(I),I=1,2),IVERS                                       -
C                                                                       -
CW    1+3*MULT=NUMBER OF WORDS                                          -
C                                                                       -
CD    HNAME              HOLLERITH FILE NAME - PWDINT - (A6)            -
CD    HUSE(I)            HOLLERITH USER IDENTIFICATION (A6)             -
CD    IVERS              FILE VERSION NUMBER                            -
CD    MULT               DOUBLE PRECISION PARAMETER                     -
CD                        1- A6 WORD IS SINGLE WORD                      -
CD                        2- A6 WORD IS DOUBLE PRECISION WORD            -
C                                                                       -
C-----------------------------------------------------------------------


C-----------------------------------------------------------------------
CR          SPECIFICATIONS (1D RECORD)                                  -
C                                                                       -
CL    TIME, POWER, VOL, IM, JM, KM, NCY, NBLK                          *-
C                                                                       -
CW    8=NUMBER OF WORDS                                                 -
C                                                                       -
CD    TIME               REFERENCE REAL TIME, DAYS                      -
CD    POWER              POWER LEVEL FOR ACTUAL NEUTRONICS PROBLEM,     -
CD                        WATTS THERMAL                                  -
CD    VOL                VOLUME OVER WHICH POWER WAS DETERMINED,CC      -
CD    IM                 NUMBER OF FIRST DIMENSION FINE INTERVALS       -
CD    JM                 NUMBER OF SECOND DIMENSION FINE INTERVALS      -
C                                                                       -
CN          FOR SPECIAL TRIANGULAR GEOMETRIES, IM IS THE NUMBER OF     *-
CN          TRIANGLES ON EACH PLANE AND JM IS NOT DEFINED (SET TO 1)   *-
C                                                                       -
CD    KM                 NUMBER OF THIRD DIMENSION FINE INTERVALS       -
CD    NCY                REFERENCE COUNT (CYCLE NUMBER)                 -
CD    NBLK               =1                                            *-
C                                                                       -
C-----------------------------------------------------------------------
```

(CONT)

```
C-----------------------------------------------------------------------
CR                        POWER DENSITY VALUES (2D RECORD)              -
C                                                                       -
CL     ((PWR(I,J),I=1,IM),J=1,JM)-----NOTE STRUCTURE BELOW-----         -
C                                                                       -
CW     IM*JM=NUMBER OF WORDS                                            -
C                                                                       -
CS     DO 1 K=1,KM                                                      -
CS   1 READ(N) *LIST AS ABOVE*                                          -
C                                                                       -
CD     PWR(I,J)           POWER DENSITY BY INTERVAL, WATTS/CC          -
C                                                                       -
C-----------------------------------------------------------------------

C***********************************************************************-
C                                                                       -
CEOF         PWDINT                                                     -
C                                                                       -
C***********************************************************************-
```

SPECIFICATIONS FOR INTERFACE FILE CXSPRR

```
C*********************************************************************-
C                        PREPARED 10/18/73                            -
C                                                                     -
CF          CXSPRR                                                    -
C                                                                     -
CE          DATA FOR CROSS SECTION PROCESSOR                          -
C                                                                     -
CN          SEE INTERFACE FILE CONTRL, RECORD XCPINS, FOR REFERENCES  -
CN          TO ARRAY IX                                               -
C                                                                     -
C*********************************************************************-

C---------------------------------------------------------------------
CS          FILE STRUCTURE                                            -
CS                                                                    -
CS             RECORD TYPE                          PRESENT IF        -
CS             ================================     ===============  -
CS             FILE IDENTIFICATION                  ALWAYS            -
CS          1D FILE CONTROL                         ALWAYS            -
CS          2D CITATION SET NUMBERS                 NOP(1) GT 0       -
CS          3D NEUTRON ENERGY SPECTRUM              NOP(3) GT 0       -
CS          4D TRANSPORT MULTIPLIERS                NOP(4) GT 0       -
CS                                                                    -
CS       *********(REPEAT FROM 1 TO NOP(5))                           -
CS       *  5D ISOTOPE DATA                        NOP(5) GT 0        -
CS       *********                                                    -
CS                                                                    -
CS       *********(REPEAT FROM 1 TO NOP(6))                           -
CS       *  6D ISOTOPE NAMES IN MIXTURE            NOP(6) GT 0        -
CS       *  7D ISOTOPE DENSITIES IN MIXTURE        NOP(6) GT 0        -
CS       *********                                                    -
CS                                                                    -
CS       *********(REPEAT FROM 1 TO NOP(6))                           -
CS       *  8D MIXTURE DATA                        NOP(6) GT 0        -
CS       *********                                                    -
C                                                                     -
C---------------------------------------------------------------------

C---------------------------------------------------------------------
CR          FILE IDENTIFICATION                                       -
C                                                                     -
CL    HNAME,(HUSE(I),I=1,2),IVERS                                     -
C                                                                     -
CW    3*MULT + 1                                                      -
C                                                                     -
CD    HNAME         HOLLERITH FILE NAME - CXSPRR - (A6)               -
CD    HUSE          HOLLERITH USER IDENTIFICATION (A6)                -
CD    IVERS         FILE VERSION NUMBER                               -
CD    MULT          DOUBLE PRECISION PARAMETER                        -
CD                      1 - A6 WORD IS SINGLE WORD                    -
CD                      2 - A6 WORD IS DOUBLE PRECISION WORD          -
C                                                                     -
C---------------------------------------------------------------------
```

(CONT)

```
C-----------------------------------------------------------------------
CR     1D     FILE CONTROL                                              -
C                                                                       -
CL     (NOP(I),I=1,24)                                                  -
C                                                                       -
CW     24                                                               -
C                                                                       -
CD     NOP(1)          NUMBER OF CITATION CROSS SECTION SETS TO PROCESS -
CD                         (IF NOP(1) EQ 0 AND IX(3) EQ 1 AND IX(5) EQ 1, -
CD                         SET ONE WILL BE PROCESSED)                   -
CD     NOP(2)          SCATTERING BLOCKING FACTOR FOR NUCLIDE-ORDERED   -
CD                         FILE CREATED FROM CITATION CROSS SECTIONS    -
CD                         0 - NSBLOK = 1                               -
CD                         N - NSBLOK = N, IF (NGROUP/N)*N EQ NGROUP,   -
CD                               OTHERWISE NSBLOK = 1                   -
CD     NOP(3)          OPTION TO INPUT A NEUTRON ENERGY SPECTRUM        -
CD                         0 - NO                                       -
CD                         N - YES (N SHOULD BE EQUAL TO THE NUMBER OF  -
CD                               ENERGY GROUPS ON THE CROSS SECTION FILE) -
CD     NOP(4)          OPTION TO CREATE PSEUDO DIRECTION DEPENDENT      -
CD                         TRANSPORT DATA                               -
CD                         0 - NO                                       -
CD                         1 - YES                                      -
CD     NOP(5)          OPTION TO INPUT OVERRIDE DATA FOR ISOTOPES       -
CD                         0 - NO                                       -
CD                         N - YES (N IS THE NUMBER OF RECORDS OF DATA) -
CD     NOP(6)          NUMBER OF MIXTURES (REQUIRED IF IX(11) EQ 1)     -
CD     NOP(7)          MAXIMUM NUMBER OF ISOTOPES IN ANY MIXTURE        -
CD                         (REQUIRED IF IX(11) EQ 1)                    -
CD     NOP(8-9)        RESERVED                                         -
CD     NOP(10)         OPTION ON USE OF THE OVERRIDE DATA FOR ISOTOPES  -
CD                         WHEN NOP(5) GT 0  (APPLICABLE ONLY WHEN      -
CD                         IX(3) EQ 1 AND IX(5) EQ 0)                   -
CD                         0 - DATA CORRESPONDS WITH THE ORDER OF       -
CD                               ISOTOPES IN THE FILE                   -
CD                         1 - DATA IDENTIFIES ISOTOPES TO BE SELECTED  -
CD                               BY UNIQUE ISOTOPE LABEL                -
CD     NOP(11-23)      RESERVED                                         -
CD     NOP(24)         OPTION ON EDIT DURING CITATION CROSS SECTION     -
CD                         PROCESSING                                   -
CD                         0 - NO                                       -
CD                         1 - YES                                      -
C                                                                       -
C-----------------------------------------------------------------------
```

(CONT)

```
C-----------------------------------------------------------------------
CR    2D    CITATION CROSS SECTION SET NUMBERS                          -
C                                                                       -
CC          PRESENT IF NOP(1) GT 0                                      -
C                                                                       -
CL    (ISET(I),I=1,NOP1)                                                -
C                                                                       -
CW    NOP1 = NOP(1)                                                     -
C                                                                       -
CD    ISET          SET NUMBERS IN ASCENDING ORDER OF APPEARANCE        -
CD                      IN LIBRARY                                      -
C                                                                       -
C-----------------------------------------------------------------------

C-----------------------------------------------------------------------
CR    3D    NEUTRON ENERGY SPECTRUM                                     -
C                                                                       -
CC          PRESENT IF NOP(3) GT 0                                      -
C                                                                       -
CL    (WGT(I),I=1,NOP3)                                                 -
C                                                                       -
CW    NOP3 = NOP(3)                                                     -
C                                                                       -
CD    WGT           SPECTRUM FOR WEIGHTING IN MIXTURE CALCULATION       -
C                                                                       -
C-----------------------------------------------------------------------

C-----------------------------------------------------------------------
CR    4D    MULTIPLIERS FOR TRANSPORT CROSS SECTION                     -
C                                                                       -
CC          PRESENT IF NOP(4) GT 0                                      -
C                                                                       -
CL    (TRMOD(I),I=1,3)                                                  -
C                                                                       -
CW    3                                                                 -
C                                                                       -
CD    TRMOD         MULTIPLIER FOR EACH COORDINATE DIRECTION            -
CD                      STRPD(I) = TRMOD(I)*STRPL(1) FOR EACH ENERGY    -
C                                                                       -
C-----------------------------------------------------------------------

C-----------------------------------------------------------------------
CR    5D    ISOTOPE DATA                                                -
C                                                                       -
CC          PRESENT IF NOP(5) GT 0                                      -
CC          THERE MUST BE NOP(5) RECORDS                                -
C                                                                       -
CN          WHEN NOP(10) EQ 0,                                          -
CN          THIS DATA MAY BE USED WHEN IX(3) EQ 1 TO CONTROL THE        -
CN          PROCESSING OF THE INPUT CROSS SECTIONS. THE ORDER           -
CN          OF THESE RECORDS MUST BE ONE-TO-ONE WITH THE ORDER          -
CN          OF THE ISOTOPES IN THE INPUT CROSS SECTIONS. FOR EACH       -
CN          ISOTOPE READ FROM THE INPUT CROSS SECTIONS, ONE RECORD      -
CN          IS READ FROM THIS DATA                                      -
```

(CONT)

```
CN                                                                      -
CN            A) IF HISONM EQ 6HDELETE, THE DATA FOR THIS ISOTOPE       -
CN               IS NOT WRITTEN ON THE NEW NUCLIDE-ORDERED FILE         -
CN            B) IF HISONM NE 6HDELETE, THE DATA FOR THIS ISOTOPE       -
CN               WILL BE COPIED TO THE NEW NUCLIDE-ORDERED FILE         -
CN               (NON-BLANK OR NON-ZERO DATA WILL REPLACE THE           -
CN               DATA ON THE NEW FILE)                                  -
CN            C) IF AFTER READING NOP(5) RECORDS, THERE ARE ISOTOPES    -
CN               REMAINING IN THE INPUT CROSS SECTIONS, THOSE           -
CN               REMAINING WILL BE DELETED FROM THE NEW FILE            -
CN                                                                      -
CN         WHEN NOP(10) EQ 1,                                           -
CN         THIS DATA MAY BE USED WHEN IX(3) EQ 1 AND IX(5) EQ 0 TO      -
CN         CONTROL THE CONTENT OF THE NEW ISOTXS FILE. THE ORDER        -
CN         OF THE RECORDS IS NOT SPECIFIED SINCE THE UNIQUE LABEL       -
CN         (HISONM) IS USED TO IDENTIFY ISOTOPES TO BE COPIED TO        -
CN         THE NEW FILE. NON-BLANK OR NON-ZERO VALUES FOR THE           -
CN         REST OF THE DATA WILL BE PUT ON THE NEW FILE.                -
CN         THE UNIQUE LABEL CAN NOT BE CHANGED WHEN USING THIS OPTION.  -
CN                                                                      -
CN         IF THIS DATA IS NOT PRESENT, ALL ISOTOPES ON THE INPUT       -
CN         CROSS SECTIONS WILL BE COPIED TO THE NEW FILE                -
C                                                                       -
CL    HISONM,HABSID,HMAT,AMASS,EFISS,ECAPT,KBR,(IOP(I),I=1,3)           -
C                                                                       -
CW    3*MULT + 7                                                        -
C                                                                       -
CD    HISONM        HOLLERITH ISOTOPE LABEL (UNIQUE)   (A6)             -
CD    HABSID        HOLLERITH ISOTOPE LABEL (ABSOLUTE)   (A6)           -
CD    HMAT          HOLLERITH ISOTOPE LABEL (REFERENCE)   (A6)          -
CD    AMASS         GRAM ATOMIC WEIGHT                                  -
CD    EFISS         TOTAL THERMAL ENERGY YIELD/FISSION (W.SEC/FISS)     -
CD    ECAPT         TOTAL THERMAL ENERGY YIELD/CAPTURE(N,GAMMA)         -
CD                      (W.SEC/CAPT)                                    -
CD    KBR           ISOTOPE CLASSIFICATION                              -
CD    IOP           RESERVED                                            -
C-----------------------------------------------------------------------


C-----------------------------------------------------------------------
CR    6D     ISOTOPE NAMES IN MIXTURE                                   -
C                                                                       -
CC           PRESENT IF NOP(6) GT 0                                     -
CC           THIS RECORD AND THE RECORD FOLLOWING APPEAR IN PAIRS       -
CC           THERE MUST BE NOP(6) PAIRS                                 -
C                                                                       -
CL    (HISOMX(I),I=1,NOP7)                                              -
C                                                                       -
CW    MULT*NOP7 = MULT*NOP(7)                                           -
C                                                                       -
CD    HISOMX        UNIQUE NAME OF ISOTOPE TO BE INCLUDED IN MIXTURE    -
CD                      (BLANK NAMES ARE IGNORED)                       -
C                                                                       -
CN           ANY ISOTOPE INCLUDED IN A MIXTURE WILL BE DELETED FROM THE -
CN              NEW FILE                                                -
C-----------------------------------------------------------------------
```

(CONT)

```
C-----------------------------------------------------------------------
CR     7D     ISOTOPE DENSITIES IN MIXTURE                              -
C                                                                       -
CC            PRESENT IF NOP(6) GT 0                                    -
C                                                                       -
CL     (RDENS(I),I=1,NOP7)                                              -
C                                                                       -
CW     NOP7 = NOP(7)                                                    -
C                                                                       -
CD     RDENS          DENSITY OF ISOTOPE TO BE INCLUDED IN MIXTURE      -
C-----------------------------------------------------------------------


C-----------------------------------------------------------------------
CR     8D     MIXTURE DATA                                              -
C                                                                       -
CC            PRESENT IF NOP(6) GT 0                                    -
CC            THERE MUST BE NOP(6) RECORDS                              -
C                                                                       -
CL     HISONM,HABSID,HMAT,AMASS,EFISS,ECAPT,KBR,(IOP(I),I=1,3)          -
C                                                                       -
CW     3*MULT + 7                                                       -
C                                                                       -
CD     HISONM         HOLLERITH MIXTURE LABEL (UNIQUE)   (A6)           -
CD     HABSID         HOLLERITH MIXTURE LABEL (ABSOLUTE)   (A6)         -
CD     HMAT           HOLLERITH MIXTURE LABEL (REFERENCE)   (A6)        -
CD     AMASS          GRAM ATOMIC WEIGHT                                -
CD     EFISS          TOTAL THERMAL ENERGY YIELD/FISSION (W.SEC/FISS)   -
CD     ECAPT          TOTAL THERMAL ENERGY YIELD/CAPTURE(N,GAMMA)       -
CD                        (W.SEC/CAPT)                                 -
CD     KBR            MIXTURE CLASSIFICATION                            -
CD     IOP            RESERVED                                          -
C                                                                       -
CN            NON-BLANK DATA SHOULD BE SUPPLIED FOR LABELS              -
CN            AND NON-ZERO DATA FOR KBR                                 -
CN            AMASS, EFISS, AND ECAPT ARE CALCULATED FOR MIXTURE BUT    -
CN            MAY BE REPLACED BY NON-ZERO ENTRIES                       -
C                                                                       -
C-----------------------------------------------------------------------

C***********************************************************************-
C                                                                       -
CEOF          CXSPRR                                                    -
C                                                                       -
C***********************************************************************-
```

SPECIFICATIONS FOR INTERFACE FILE FPRINT

```
C*********************************************************************-
C                        REVISED 10/18/73                             -
C                        REVISED  8/14/75  (ORNL)                     -
C                        REVISED 11/16/78  (ORNL)                     -
C                                                                     -
CF          FPRINT                                                    -
C                                                                     -
CE          CODE-DEPENDENT INPUT DATA FILE FOR PRINT MODULE           -
C                                                                     -
CN          CONTROLS FILE PRINTING AND PUNCHING.                      -
CN          FILES MAY BE PRINTED AND/OR SAVED IN CARD IMAGE FORM      -
CN          SUITABLE FOR INPUT TO THE STANDARD INPUT PROCESSOR.       -
CN          THE CARD IMAGES MAY BE SAVED ON TAPE, DISK, OR CARDS.     -
C                                                                     -
C*********************************************************************-

C---------------------------------------------------------------------
CS          FILE STRUCTURE                                            -
CS                                                                    -
CS             RECORD TYPE                    PRESENT IF              -
CS             -----------                    ----------              -
CS                                                                    -
CS       0V    FILE IDENTIFICATION            ALWAYS                  -
CS       1D    FILE CONTROL                   ALWAYS                  -
CS    * * * * * *(REPEAT FROM 1 TO NSPECS)                            -
CS    *  2D    FILE PRINT/PUNCH CONTROL       ALWAYS                  -
CS    *  3D    RECORD-TYPE I.D. NUMBERS       NFREC.GT.0              -
CS    * * * * * *                                                     -
CS                                                                    -
C---------------------------------------------------------------------

C---------------------------------------------------------------------
CR          FILE IDENTIFICATION                                       -
C                                                                     -
CL    HNAME,(HUSE(I),I=1,2),IVERS                                     -
C                                                                     -
CW    3*MULT+1                                                        -
C                                                                     -
CD    HNAME              HOLLERITH FILE NAME - FPRINT - (A6)          -
CD    HUSE(I)            HOLLERITH USER IDENTIFICATION (2A6)          -
CD    IVERS              FILE VERSION NUMBER                          -
CD    MULT               DOUBLE PRECISION PARAMETER                   -
CD                          1- A6 WORD IS SINGLE WORD                 -
CD                          2- A6 WORD IS DOUBLE WORD                 -
C                                                                     -
C---------------------------------------------------------------------
```

(CONT)

```
C-----------------------------------------------------------------------
CR    1D    FILE CONTROL                                                -
C                                                                       -
CL    NSPECS,NBCD,NSTOP,NDUM                                            -
C                                                                       -
CW    4                                                                 -
C                                                                       -
CD    NSPECS            NUMBER OF STANDARD FILES TO BE PROCESSED        -
CD                         (MUST BE .LE.20)                             -
CD    NBCD              UNIT NUMBER FOR SAVING FILES IN CARD IMAGE FORM -
CD                         DEFAULT IS UNIT 7 AND NO ENDFILE OR REWIND  -
CD                         IS PERFORMED. ANY OTHER UNIT SPECIFIED WILL -
CD                         BE CLOSED OUT WITH ENDFILE AND REWIND.      -
CD    NSTOP             OPTION TO PLACE THE CHARACTERS 'STOP' AT THE    -
CD                         END OF THE CARD IMAGES                       -
CD                         0- YES                                       -
CD                         1- NO                                        -
CD    NDUM              OPTION TO PURGE OR RETAIN THE FPRINT FILE       -
CD                         AFTER EXECUTION OF LASL PRINT/PUNCH          -
CD                         PROCESSOR                                    -
CD                         0- PURGE                                     -
CD                         1- RETAIN                                    -
C                                                                       -
C-----------------------------------------------------------------------
```

```
C-----------------------------------------------------------------------
CR    2D    FILE PRINT/PUNCH CONTROL                                    -
C                                                                       -
CL    FILEID,IVER,NOPT,NFREC                                            -
C                                                                       -
CW    MULT+3                                                            -
C                                                                       -
CD    FILEID            HOLLERITH NAME OF FILE TO BE PROCESSED - (A6)   -
CD    IVER              VERSION OF FILE TO BE PROCESSED (IF IVER=0,     -
CD                         THE LATEST VERSION WILL BE PROCESSED)        -
CD    NOPT              PRINT/PUNCH OPTION                              -
CD                         0- PRINT ONLY                                -
CD                         1- PUNCH ONLY                                -
CD                         2- PRINT AND PUNCH                           -
CD    NFREC             SELECTED RECORDS FLAG                           -
CD                         .EQ.0 - PRINT COMPLETE FILE                  -
CD                         .GT.0 - PRINT SELECTED RECORD-TYPES AS       -
CD                         SPECIFIED IN THE NEXT RECORD                 -
CD                         (MUST BE  .LE.10)                            -
C                                                                       -
C-----------------------------------------------------------------------
```

(CONT)

```
C-----------------------------------------------------------------------
CR     3D     RECORD-TYPE I.D. NUMBERS                                  -
C                                                                       -
CC     PRESENT IF NFREC.GT.0                                            -
C                                                                       -
CL     (ID(I),I=1,NFREC)                                                -
C                                                                       -
CW     NFREC                                                            -
C                                                                       -
CD     ID(I)              IDENTIFICATION NUMBERS OF SELECTED            -
CD                           RECORD-TYPES TO BE PRINTED                 -
CD                           (MUST BE  .LE.10)                          -
C                                                                       -
C-----------------------------------------------------------------------

C***********************************************************************-
C                                                                       -
CEOF         FPRINT                                                     -
C                                                                       -
C***********************************************************************-
```

Figure C.4. Newly Defined Files

SPECIFICATIONS FOR INTERFACE FILE EXPOSE

```
C*********************************************************************-
C                      REFERENCE 02/01/79 ORNL-5180                   -
C                                                                     -
CF          EXPOSE                                                    -
C                                                                     -
CE          DATA FOR EXPOSURE CALCULATIONS                            -
C                                                                     -
CN          THE BASIC DATA REQUIRED FOR SOLVING THE CHAIN             -
CN          EQUATIONS IDENTIFIES NUCLIDES, FISSIONING                 -
CN          NUCLIDES, FISSION PRODUCTS, AND GIVES DECAY, YIELD, ENERGY, -
CN          AND COUPLING DATA                                         -
C                                                                     -
C*********************************************************************-

C---------------------------------------------------------------------
CR          FILE IDENTIFICATION                                       -
C                                                                     -
CL    HNAME,(HUSE(I),I=1,2),IVERS                                     -
C                                                                     -
CW          3*MULT + 1                                                -
C                                                                     -
CD    HNAME          FILE NAME (A6) 'EXPOSE'                          -
CD    HUSE           USER IDENTIFICATION (A6)                         -
CD    IVERS          FILE VERSION NUMBER                              -
C                                                                     -
CN    MULT           1 FOR LONG WORD, 2 FOR SHORT WORD MACHINES       -
C                                                                     -
C---------------------------------------------------------------------


C---------------------------------------------------------------------
CR    1D    FILE REFERENCE INFORMATION                                -
C                                                                     -
CL    NEXP1,NISOE,NAMOPT,NYER,NGER,NFSLR,NFPR,NDCYR,NEXP9,NEXP10,     -
CL    NEXP11,NMATXE,LSEXCH,LBEXCH,NEXP15,NOEDCY,NOEFIS,NOECAP,        -
CL    NEXP19,NEXP20                                                   -
C                                                                     -
CW          20                                                        -
C                                                                     -
CN    UNDEFINED DATA IS RESERVED FOR FUTURE USE                       -
C                                                                     -
CD    NEXP1          DOCUMENTING FILE REFERENCE NUMBER                -
CD    NISOE          REFERENCE NUMBER OF NUCLIDES                     -
CD                    MUST BE NON-ZERO                                -
CD    NAMOPT         OPTION ON NUCLIDE NAMES                          -
CD                   IF 0 - THEY ARE ABSOLUTE NAMES                   -
CD                   IF 1 - THEY ARE USER LABELS                      -
C                                                                     -
CN                   IN FILE ISOTXS, ABSOLUTE NAMES ARE               -
CN                   HABSID, WHILE USER LABELS ARE HISONM             -
C                                                                     -
CN                   UNIQUE NAMES ARE REQUIRED HERE                   -
C                                                                     -
```

(CONT)

```
CD     NYER          NUMBER OF ENERGY RANGES FOR YIELD DATA                -
CD                    (GENERALLY NON-ZERO)                                 -
CD     NGER          NUMBER OF ENERGY RANGES FOR GAMMA RAYS               -
CD     NFSLR         NUMBER OF IDENTIFIED FISSILE NUCLIDES WHICH YIELD    -
CD                    FISSION PRODUCTS                                     -
CD     NFPR          NUMBER OF FISSION PRODUCTS HAVING YIELD              -
CD     NDCYP         NUMBER OF NUCLIDES WHICH DECAY                       -
CD     NEXP9         RESERVED                                             -
CD     NEXP10        RESERVED                                             -
CD     NEXP11        RESERVED                                             -
CD     NMATXE        OPTION IF .GT. 0 INDICATING THE NUMBER               -
CD                   OF MATRIX EXPONENTIAL DATA ENTRIES                   -
CD     LSEXCH        OPTION IF .GT.0 INDICATING THE NUMBER                -
CD                   OF ENTRIES IN THE SUPPLEMENTING TABLE OF EXPLICIT    -
CD                   CHAIN DATA (USED WITH MATRIX DATA)                   -
CD     LBEXCH        OPTION IF .GT.0 INDICATING THE NUMBER                -
CD                   OF ENTRIES IN THE BASIC TABLE OF EXPLICIT            -
CD                   CHAIN DATA (USED ONLY ALONE)                         -
CD     NEXP15        RESERVED                                             -
CD     NOEDCY        OPTION INDICATING DATA FOR THE DECAY PROCESS         -
CD                   IS INCLUDED FOR GAMMA RAYS AND BETA PARTICLES        -
CD     NOEFIS        OPTION INDICATING DATA FOR THE FISSION PROCESS       -
CD                   IS INCLUDED FOR GAMMA RAYS AND BETA PARTICLES        -
CD     NOECAP        OPTION INDICATING DATA FOR THE CAPTURE PROCESS       -
CD                   IS INCLUDED FOR GAMMA RAYS AND BETA PARTICLES        -
CD     NEXP19        RESERVED                                             -
CD     NEXP20        RESERVED                                             -
C                                                                         -
C-------------------------------------------------------------------------

C-------------------------------------------------------------------------
CR     2D     TITLE AND NUCLIDE NAMES                                     -
C                                                                         -
CC            ALWAYS PRESENT                                              -
C                                                                         -
CN            HEREAFTER ALL REFERENCES TO NUCLIDES IN THIS FILE ARE       -
CN            BY THE ORDER NUMBER IN THIS TABLE OF NAMES                  -
C                                                                         -
CL     (HTL(J),J=1,12),(HNUC(I),I=1,NISOE)                                -
C                                                                         -
CW            MULT*(12+NISOE)                                             -
C                                                                         -
CD     HTL           DOCUMENTING TITLE  (12A6)                           -
CD     HNUC(I)       NAME OF NUCLIDE ORDERED I (A6) SEE NAMOPT OPTION    -
C                                                                         -
CN            ALL NUCLIDES TO BE TREATED (EXPOSURE CALCULATED) MUST BE    -
CN            NAMED IN THIS LIST (NORMALLY EXCLUDE COOLANT, STRUCTURE).   -
```

(CONT)

```
C                                                                       -
CN          WHEN THE AVERAGE GENERATION RATE METHOD IS USED, THESE      -
CN          SPECIFICATIONS ARE PROCESSED IN THE ORDER IN THIS LIST, SO  -
CN          THEY SHOULD BE ORDERED ALONG CHAINS, DOMINATING ROUTES FIRST-
CN          (EXAMPLE,  U....PU, I..XE, XE..CS), FISSION PRODUCTS LAST.  -
C                                                                       -
CN          NUCLIDES SPECIFIED HERE BUT ABSENT IN THE SYSTEM OF COURSE  -
CN          ARE NOT TREATED - IMPACTS ARE DOCUMENTED ELSEWHERE.         -
C                                                                       -
C-----------------------------------------------------------------------

C-----------------------------------------------------------------------
CR    3D    REFERENCE DATA                                              -
C                                                                       -
CC          PRESENT IF NYER+NGER+NFSLR+NFPR+NDCYR .GT. 0                -
C                                                                       -
CL    (YER(N),N=1,NYER),(GER(J),J=1,NGER),(IFSLR(K),K=1,NFSLR),         -
CL    (IFPR(L),L=1,NFPR),(IDCYR(I),I=1,NDCYR)                           -
C                                                                       -
CW          NYER+NGER+NFSLR+NFPR+NDCYR                                  -
C                                                                       -
CD    YER           LOWER ENERGY OF RANGE OF INCIDENT                   -
CD                  NEUTRON ENERGY (EV), DECREASING ORDER               -
CD                  (LAST NUMBER TYPICALLY ZERO, SINGLE VALUE USUALLY 0)-
CD    GER           MEAN OR EFFECTIVE ENERGY OF EACH RANGE              -
CD                   OF DATA FOR GAMMA RAY ENERGY DATA, ORDERED BY      -
CD                   DECREASING ENERGY, FOR DOCUMENTATION (EV PER PART.)-
CD    IFSLR         REFERENCE ORDER NUMBER OF IDENTIFIED                -
CD                  NUCLIDES WHICH FISSION                              -
CD    IFPR          REFERENCE ORDER NUMBER OF FISSION PRODUCTS          -
CD                   (NUCLIDES FOR WHICH FISSION YIELD DATA IS GIVEN)   -
CD    IDCYR         REFERENCE ORDER NUMBER OF NUCLIDES WHICH DECAY      -
C                                                                       -
C-----------------------------------------------------------------------

C-----------------------------------------------------------------------
CR    4D    DECAY DATA                                                  -
C                                                                       -
CC          PRESENT IF NDCYR .GT. 0                                     -
C                                                                       -
CL    (ALMDA(I),I=1,NDCYR)                                              -
C                                                                       -
CW          NDCYR                                                       -
C                                                                       -
CD    ALMDA         TOTAL DECAY CONSTANT FOR NUCLIDE ORDERED I IN THE   -
CD                  REFERENCE SET IDCYR(I)    (SEC-1)                   -
C                                                                       -
C-----------------------------------------------------------------------
```

(CONT)

```
C                                                                       -
CN          ONLY NUCLIDES GIVEN IN THESE CHAINS WILL BE TREATED         -
CN          (EXPOSED)                                                   -
C                                                                       -
C-----------------------------------------------------------------------

C-----------------------------------------------------------------------
CR    9D    DECAY ENERGY RELEASE DATA                                   -
C                                                                       -
CC          PRESENT IF NOEDCY .GT. 0 .AND. NDCYR*(NGER+2) .GT. 0        -
C                                                                       -
CL    ((EGAMA(I,J),I=1,NDCYR),J=1,NGER),(EBETA(I),I=1,NDCYR),           -
CL    (EDCY(I),I=1,NDCYR)                                               -
C                                                                       -
CW          NDCYR*(NGER+2)                                              -
C                                                                       -
CD    EGAMA(I,J)     THE AMOUNT OF ENERGY RELEASED PER ATOMIC           -
CD                   DECAY OF PARENT NUCLIDE IDCYR(I)                   -
CD                   AS GAMMA RAYS IN ENERGY RANGE J (EV)               -
CD    EBETA(I)       THE AMOUNT OF ENERGY RELEASED PER                  -
CD                   ATOMIC DECAY OF PARENT NUCLIDE IDCYR(I)            -
CD                   AS BETA PARTICLES (EV)                             -
CD    EDCY(I)        THE AMOUNT OF ENERGY RELEASED PER ATOMIC DECAY OF  -
CD                   PARENT NUCLIDE IDCYR(I), (EV)                      -
C                                                                       -
C-----------------------------------------------------------------------

C-----------------------------------------------------------------------
CR    10D   SECONDARY ENERGY FROM FISSION                               -
C                                                                       -
CC          PRESENT IF NOEFIS .GT. 0 .AND. NFSLR*(NGER+1) .GT. 0        -
C                                                                       -
CL    ((EFGAM(I,J),I=1,NFSLR),J=1,NGER),(EFBAT(I),I=1,NFSLR)            -
C                                                                       -
CW          NFSLR*(NGER+1)                                              -
C                                                                       -
CD    EFGAM(I,J)     THE AMOUNT OF ENERGY RELEASED PER                  -
CD                   ATOMIC FISSION OF NUCLIDE IFSLR(I)                 -
CD                   AS GAMMA RAYS IN ENERGY RANGE J (EV)               -
CD    EFBAT(I)       THE AMOUNT OF ENERGY RELEASED PER ATOMIC           -
CD                   FISSION OF NUCLIDE IFSLR(I) AS BETA PARTICLES (EV) -
C                                                                       -
C-----------------------------------------------------------------------
```

(CONT)

```
C-----------------------------------------------------------------------
CR    7D    CHAIN DATA, SUPPLEMENTAL EXPLICIT                          -
C                                                                      -
CC          PRESENT IF LSEXCH .GT. 0                                   -
C                                                                      -
CL    (NSXCH(I),I=1,LSEXCH)                                            -
C                                                                      -
CW          LSEXCH                                                     -
C                                                                      -
CD    NSXCH          ENTRY IN THE SUPPLEMENTAL EXPLICIT CHAIN          -
CD                   DATA TABLE (SEE DESCRIPTION BELOW)                -
C                                                                      -
C-----------------------------------------------------------------------


C-----------------------------------------------------------------------
CR    8D    CHAIN DATA, COMPLETE BASIC DATA TO APPLY EXPLICIT SOLUTION -
C                                                                      -
CC          PRESENT IF LBEXCH .GT. 0                                   -
C                                                                      -
CL    (NBXCH(I),I=1,LBEXCH)                                            -
C                                                                      -
CW          LBEXCH                                                     -
C                                                                      -
CD    NBXCH          ENTRY IN THE BASIC EXPLICIT CHAIN DATA TABLE,     -
CD                   OUTLINED HERE                                     -
C                                                                      -
CN          THE FIRST ENTRY IS THE FIRST NUCLIDE IN THE FIRST          -
CN          CHAIN.  THE NEXT ENTRY IS THE TRANSMUTATION PROCESS FOR    -
CN          GENERATION OF THE PRODUCT (SEE THE VALUES OF MATXB(3,I) IN -
CN          THE TABLE ABOVE).  THE NEXT ENTRY IN THE LIST IS THE FIRST -
CN          PRODUCT IN THE FIRST CHAIN.  THUS FOR N NUCLIDES IN A CHAIN,-
CN          THERE ARE 2*(N-1)+1 ENTRIES FOR THE CHAIN.  THEN THERE IS A -
CN          ZERO ENTRY.  DATA FOLLOWS FOR THE NEXT CHAIN.  A FINAL     -
CN          EXTRA ZERO IS PLACED AT THE END AFTER THE LAST CHAIN WHICH -
CN          FLAGS THE END OF CHAINS.  TWO ZERO ENTRIES AT THE END.     -
CN          ENTER ACTINIDE CHAINS FIRST.                               -
C                                                                      -
CN          REPEAT OF A NUCLIDE REFERENCE IN A CHAIN IS NOT ALLOWED.   -
CN          GIVEN A FIRST APPEARANCE IN ONE CHAIN, SUBSEQUENT ENTRIES OF-
CN          A NUCLIDE REFERENCE INDICATE OTHER GENERATION ROUTES WHICH -
CN          CONTRIBUTE INDEPENDENTLY.  CARE MUST BE TAKEN TO SUPPLY    -
CN          REASONABLE SPECIFICATIONS - ONLY THE ACTUAL CHAINS SHOWN   -
CN          WILL BE TREATED, SO FULL SPECIFICATIONS REQUIRING REPEATS  -
CN          ARE REQUIRED, AND ONLY LIMITED BRANCHING IS ALLOWED.       -
CN          THE CONTRIBUTIONS ALONG A ROUTE THROUGH THE CHAINS ARE ONLY -
CN          THOSE FOR THE NUCLIDES ACTUALLY GIVEN FOR THAT CHAIN.      -
CN          AS AN EXAMPLE, THE TABLE                                   -
CN          1 +02 2 +02 3 +01 4 +02 5 0 1 +02 2 +01 6 +02 -4 +02 -5 0 0 -
CN          ALLOWS TWO ROUTES TO BE TREATED FOR GENERATION OF NUCLIDES -
CN          REFERENCED 4 AND 5.  THE -4 AND -5 IN THE SECOND CHAIN     -
CN          INDICATE THESE CONTRIBUTIONS ARE ADDITIONAL.               -
```

(CONT)

```
C-----------------------------------------------------------------------
CR    5D     FISSION PRODUCT YIELD DATA                                 -
C                                                                       -
CC           PRESENT IF NFSLR*NFPR*NYER .GT. 0                          -
C                                                                       -
CL    (((YFFP(K,L,N),K=1,NFSLR),L=1,NFPR),N=1,NYER)                     -
C                                                                       -
CW           NFSLR*NFPR*NYER                                            -
C                                                                       -
CD    YFFP(K,L,N)    YIELD OF FISSION PRODUCT IFPR(L) FROM               -
CD                   FISSION OF NUCLIDE IFSLR(K) DUE TO FISSIONING      -
CD                   NEUTRON IN ENERGY RANGE N                          -
CD                   (ATOMS PER SECOND PER FISSION PER SECOND)          -
C                                                                       -
C-----------------------------------------------------------------------


C-----------------------------------------------------------------------
CR    6D     CHAIN DATA FOR MATRIX EXPONENTIAL OR AVERAGE GENERATION RATE-
C                                                                       -
CC           PRESENT IF NMATXE .GT. 0                                   -
C                                                                       -
CL    ((MATXE(J,I),J=1,3),I=1,NMATXE)                                   -
C                                                                       -
CW           3*NMATXE                                                   -
C                                                                       -
CD    MATXE(1,I)     SOURCE NUCLIDE                                     -
CD    MATXE(2,I)     PRODUCT NUCLIDE                                    -
CD    MATXE(3,I)     SPECIFIES THE TRANSMUTATION PROCESS,               -
CD                    0- NOT ALLOWED                                    -
CD                    1- DECAY                                          -
CD                    2- (N,GAMMA), USUAL CAPTURE UP THE CHAIN          -
CD                    3- (N,ALPHA)                                      -
CD                    4- (N,P)                                          -
CD                    5- (N,2N), DOWN THE CHAIN                         -
CD                    6- (N,D)                                          -
CD                    7- (N,T)                                          -
CD                    8- FISSION (DO NOT SPECIFY FOR A FISSION PRODUCT  -
CD                       FOR WHICH YIELD DATA IS GIVEN, THIS IS TREATED -
CD                     DIRECTLY)                                        -
CD                    9- TOTAL CAPTURE, TOTAL ABSORPTION LESS FISSION   -
C                                                                       -
CN           PARTIAL RATES OF PRODUCT GENERATION CAN BE CONSIDERED.  THE -
CN           PARTS PER MILLION IS EXPRESSED AS AN INTEGER (500000 IS THE -
CN           FRACTION 0.5), ROUNDED TO THE NEAREST TEN (LAST DIGIT ZERO),-
CN           ADDED TO THE NUMBER FROM THE ABOVE TABLE TO SPECIFY THE    -
CN           TRANSMUTATION PROCESS.  FOR EXAMPLE, IF THE PARTIAL CAPTURE -
CN           ROUTES OF PM-147 TO PM-148 AND TO PM-148M ARE BOTH TO BE   -
CN           CONSIDERED, THE FIRST AT FRACTION 0.53, THE APPROPRIATE    -
CN           ENTRIES TO INDICATE (N,GAMMA) REACTION PRODUCTS ARE 530002 -
CN           FOR THE PRODUCT PM-148 AND 470002 FOR PM-148M.  LESS THAN  -
CN           A TOTAL FRACTION OF UNITY MAY BE SPECIFIED, BUT TAKE CARE. -
C                                                                       -
C-----------------------------------------------------------------------
```

(CONT)

```
C-----------------------------------------------------------------------
CR     11D   ENERGY RELEASE FROM CAPTURE                                -
C                                                                       -
CC           PRESENT IF NOECAP .GT. 0 .AND. NISOE*(NGER+1) .GT. 0       -
C                                                                       -
CL     ((ECGAM(I,J),I=1,NISOE),J=1,NGER),(ECBAT(I),I=1,NISOE)           -
C                                                                       -
CW           NISOE*(NGER+1)                                             -
C                                                                       -
CD     ECGAM(I,J)     THE AMOUNT OF ENERGY RELEASED PER                 -
CD                    ATOMIC CAPTURE OF NUCLIDE I AS GAMMA RAYS         -
CD                    IN ENERGY RANGE J (EV)                            -
CD     ECBAT(I)       THE AMOUNT OF ENERGY RELEASED PER ATOMIC          -
CD                     CAPTURE OF NUCLIDE I AS BETA PARTICLES (EV)      -
C                                                                       -
C-----------------------------------------------------------------------

C***********************************************************************-
C                                                                       -
CEOF         EXPOSE                                                     -
C                                                                       -
C***********************************************************************-
```

SPECIFICATIONS FOR INTERFACE FILE EXPOHT

```
C*********************************************************************-
C                     REFERENCE 02/01/79 ORNL-5180                    -
C                      MODIFIED 05/01/79                              -
C                                                                     -
CF          EXPOHT                                                    -
C                                                                     -
CE          RECORD OF EXPOSURE HISTORY                                -
C                                                                     -
CN          ORIGINAL SPECS MODIFIED TO INCLUDE SUBZONE FLUENCE        -
C                                                                     -
C*********************************************************************-

C---------------------------------------------------------------------
CS          FILE STRUCTURE                                            -
CS                                                                    -
CS             RECORD TYPE                          PRESENT IF        -
CS          ================================     ===============    -
CS             FILE IDENTIFICATION                  ALWAYS            -
CS          1D FILE REFERENCE INFORMATION           ALWAYS            -
CS       ********** (REPEAT FROM 1 TO IHIST)                         -
CS       *  2D GENERAL INFORMATION                  ALWAYS            -
CS       *  3D TOTAL FLUENCE                        NFLUT = 1         -
CS       *  4D FLUENCE RANGE 1                      NFLU1 = 1         -
CS       *  5D FLUENCE RANGE 2                      NFLU2 = 1         -
CS       *  8D FISSIONS                             NRR1 = 1          -
CS       *  9D EXPOSURE                             NRR2 = 1          -
CS       * 10D ENERGY                               NRR3 = 1          -
CS       * 11D UNDEFINED                            NRR4 = 1          .
CS       **********                                                   -
CS                                                                    -
C---------------------------------------------------------------------

C---------------------------------------------------------------------
CR          FILE IDENTIFICATION                                       -
C                                                                     -
CL     HNAME,(HUSE(I),I=1,2),IVERS                                    -
C                                                                     -
CW          3*MULT + 1                                                -
C                                                                     -
CD     HNAME          FILE NAME (A6) 'EXPOHT'                         -
CD     HUSE           USER IDENTIFICATION (A6)                        -
CD     IVERS          FILE VERSION NUMBER                             -
C                                                                     -
CN     MULT           1 FOR LONG WORD, 2 FOR SHORT WORD MACHINES      -
C                                                                     -
C---------------------------------------------------------------------
```

(CONT)

```
C-----------------------------------------------------------------------
CR     1D     FILE REFERENCE INFORMATION                                -
C                                                                       -
CL     EXPH1,EXPH2,EXPH3,EFLU1,EFLU2,IHIST,IZONE,ISZ,                   -
CL     NFLUT,NFLU1,NFLU2,IXPH12,IXPH13,NRR1,NRR2,NRR3,                  -
CL     NRR4,IXPH18,IXPH19,IXPH20                                        -
C                                                                       -
CW           20                                                         -
C                                                                       -
CD     EXPH1          END OF EXPOSURE TIME (DAYS) FROM LAST SET OF DATA -
CD     EXPH2          RESERVED                                          -
CD     EXPH3          RESERVED                                          -
CD     EFLU1          CUTOFF ENERGY (EV) FOR FIRST FLUENCE              -
CD     EFLU2          CUTOFF ENERGY (EV) FOR SECOND FLUENCE             -
CD     IHIST          NUMBER OF SETS OF DATA                            -
CD     IZONE          NUMBER OF ZONES                                   -
CD     ISZ            NUMBER OF SUBZONES                                -
CD     NFLUT          OPTION FOR TOTAL FLUENCE                          -
CD                     0 - NOT PRESENT                                  -
CD                     1 - PRESENT                                      -
CD     NFLU1          OPTION FOR FLUENCE IN FIRST RANGE                 -
CD                     0 - NOT PRESENT                                  -
CD                     1 - PRESENT                                      -
C                                                                       -
CN                    WHEN NFLU1 = 1, EFLU1 MUST BE GREATER THAN 0 AND  -
CN                     LIE IN THE ENERGY RANGE SPECIFIED IN THE         -
CN                     CROSS SECTION DATA                               -
C                                                                       -
CD     NFLU2          OPTION FOR FLUENCE IN SECOND RANGE                -
CD                     0 - NOT PRESENT                                  -
CD                     1 - PRESENT                                      -
C                                                                       -
CN                    WHEN NFLU2 = 1, EFLU2 MUST BE GREATER THAN 0 AND  -
CN                     LIE IN THE ENERGY RANGE SPECIFIED IN THE         -
CN                     CROSS SECTION DATA                               -
C                                                                       -
CD     IXPH12         RESERVED                                          -
CD     IXPH13         RESERVED                                          -
CD     NRR1           OPTION FOR FISSIONS                               -
CD                     0 - NOT PRESENT                                  -
CD                     1 - PRESENT                                      -
CD     NRR2           OPTION FOR EXPOSURE                               -
CD                     0 - NOT PRESENT                                  -
CD                     1 - PRESENT                                      -
CD     NRR3           OPTION FOR ENERGY                                 -
CD                     0 - NOT PRESENT                                  -
CD                     1 - PRESENT                                      -
CD     NRR4           OPTION FOR UNDEFINED                              -
CD                     0 - NOT PRESENT                                  -
CD                     1 - PRESENT                                      -
CD     IXPH18         RESERVED                                          -
CD     IXPH19         RESERVED                                          -
CD     IXPH20         INDICATOR NORMALLY = 0, BUT IS SET = 1 IF         -
CD                     A DISCONTINUITY EXISTS IN EXPOSURE TIMES         -
C                                                                       -
C-----------------------------------------------------------------------
```

(CONT)

```
C-----------------------------------------------------------------------
CR    2D    GENERAL INFORMATION                                         -
C                                                                       -
CL    (EPHT(I),I=1,40)                                                  -
C                                                                       -
CW          40                                                          -
C                                                                       -
CD    EPHT(1)        END OF EXPOSURE TIME (DAYS)                        -
CD    EPHT(2)        START OF EXPOSURE TIME (DAYS)                      -
CD    EPHT(3)        FRACTION OF CORE TREATED IN PROBLEM                -
CD    EPHT(4)        CONVERSION FACTOR, RATIO OF THERMAL ENERGY TO      -
CD                    FISSION + CAPTURE ENERGY (FROM CROSS SECTIONS)    -
CD    EPHT(5-10)     RESERVED                                           -
CD    EPHT(11)       CURRENT TOTAL SYSTEM FISSIONS                      -
CD                    (FISSIONS)                                        -
C                                                                       -
CN                   DEFINED WHEN NRR1 = 1                              -
C                                                                       -
CD    EPHT(12)       CURRENT TOTAL SYSTEM EXPOSURE                      -
CD                    (MEGAWATT(THERMAL)-DAYS/KG)                       -
C                                                                       -
CN                   DEFINED WHEN NRR2 = 1                              -
C                                                                       -
CD    EPHT(13)       CURRENT TOTAL SYSTEM ENERGY                        -
CD                    (MEGAWATT(THERMAL)-DAYS)                          -
C                                                                       -
CN                   DEFINED WHEN NRR3 = 1                              -
C                                                                       -
CD    EPHT(14)       CURRENT TOTAL SYSTEM UNDEFINED                     -
C                                                                       -
CN                   DEFINED WHEN NRR4 = 1                              -
C                                                                       -
CD    EPHT(15-20)    RESERVED                                           -
CD    EPHT(21)       CUMULATIVE TOTAL SYSTEM FISSIONS                   -
CD                    (FISSIONS)                                        -
C                                                                       -
CN                   DEFINED WHEN NRR1 = 1                              -
C                                                                       -
CD    EPHT(22)       CUMULATIVE TOTAL SYSTEM EXPOSURE                   -
CD                    (MEGAWATT(THERMAL)-DAYS/KG)                       -
C                                                                       -
CN                   DEFINED WHEN NRR2 = 1                              -
C                                                                       -
CD    EPHT(23)       CUMULATIVE TOTAL SYSTEM ENERGY                     -
CD                    (MEGAWATT(THERMAL)-DAYS)                          -
C                                                                       -
CN                   DEFINED WHEN NRR3 = 1                              -
C                                                                       -
CD    EPHT(24)       CUMULATIVE TOTAL SYSTEM UNDEFINED                  -
C                                                                       -
CN                   DEFINED WHEN NRR4 = 1                              -
C                                                                       -
CD    EPHT(25-40)    RESERVED                                           -
C                                                                       -
C-----------------------------------------------------------------------
```

(CONT)

```
C-----------------------------------------------------------------------
CR    3D    TOTAL FLUENCE                                               -
C                                                                       -
CC          PRESENT IF NFLUT = 1                                        -
C                                                                       -
CL    (FLUT(MM),MM=1,ITZSZ)                                             -
C                                                                       -
CW          ITZSZ = IZONE + ISZ                                         -
C                                                                       -
CD    FLUT          CUMULATIVE TOTAL FLUENCE BY ZONE AND SUBZONE        -
CD                   (NEUTRONS/CM**2)                                   -
C                                                                       -
C-----------------------------------------------------------------------

C-----------------------------------------------------------------------
CR    4D    FLUENCE TO FIRST CUTOFF ENERGY EFLU1                        -
C                                                                       -
CC          PRESENT IF NFLU1 = 1                                        -
C                                                                       -
CL    (FLU1(MM),MM=1,ITZSZ)                                             -
C                                                                       -
CW          ITZSZ = IZONE + ISZ                                         -
C                                                                       -
CD    FLU1          CUMULATIVE FLUENCE IN FIRST RANGE BY ZONE           -
CD                   AND SUBZONE (NEUTRONS/CM**2)                       -
C                                                                       -
C-----------------------------------------------------------------------

C-----------------------------------------------------------------------
CR    5D    FLUENCE TO SECOND CUTOFF ENERGY EFLU2                       -
C                                                                       -
CC          PRESENT IF NFLU2 = 1                                        -
C                                                                       -
CL    (FLU2(MM),MM=1,ITZSZ)                                             -
C                                                                       -
CW          ITZSZ = IZONE + ISZ                                         -
C                                                                       -
CD    FLU2          CUMULATIVE FLUENCE IN SECOND RANGE BY ZONE          -
CD                   AND SUBZONE (NEUTRONS/CM**2)                       -
C                                                                       -
C-----------------------------------------------------------------------
```

(CONT)

```
C-----------------------------------------------------------------------
CR     6D     RESERVED                                                  -
C-----------------------------------------------------------------------

C-----------------------------------------------------------------------
CR     7D     RESERVED                                                  -
C-----------------------------------------------------------------------

C-----------------------------------------------------------------------
CR     8D     FISSIONS                                                  -
C                                                                       -
CC            PRESENT IF NRR1 = 1                                       -
C                                                                       -
CL     (RR1(MM),MM=1,ITZSZ)                                             -
C                                                                       -
CW            ITZSZ = IZONE + ISZ                                       -
C                                                                       -
CD     RR1            CUMULATIVE FISSIONS BY ZONE AND SUBZONE          -
CD                     (FISSIONS/CM**3)                                 -
C                                                                       -
C-----------------------------------------------------------------------

C-----------------------------------------------------------------------
CR     9D     EXPOSURE                                                  -
C                                                                       -
CC            PRESENT IF NRR2 = 1                                       -
C                                                                       -
CL     (RR2(MM),MM=1,ITZSZ)                                             -
C                                                                       -
CW            ITZSZ = IZONE + ISZ                                       -
C                                                                       -
CD     RR2            CUMULATIVE EXPOSURE BY ZONE AND SUBZONE          -
CD                     (MEGAWATT(THERMAL)-DAYS/KG)                      -
C                                                                       -
C-----------------------------------------------------------------------

C-----------------------------------------------------------------------
CR     10D    ENERGY                                                    -
C                                                                       -
CC            PRESENT IF NRR3 = 1                                       -
C                                                                       -
CL     (RR3(MM),MM=1,ITZSZ)                                             -
C                                                                       -
CW            ITZSZ = IZONE + ISZ                                       -
C                                                                       -
CD     RR3            CUMULATIVE ENERGY BY ZONE AND SUBZONE            -
CD                     (MEGAWATT(THERMAL)-DAYS/CM**3)                   -
C                                                                       -
C-----------------------------------------------------------------------
```

(CONT)

```
C-----------------------------------------------------------------------
CR     11D   UNDEFINED                                                 -
C                                                                      -
CC           PRESENT IF NRR4 = 1                                       -
C                                                                      -
CL     (RR4(MM),MM=1,ITZSZ)                                            -
C                                                                      -
CW           ITZSZ = IZONE + ISZ                                       -
C                                                                      -
CD     RR4            UNDEFINED                                       -
C                                                                      -
C-----------------------------------------------------------------------

C***********************************************************************-
C                                                                      -
CEOF         EXPOHT                                                    -
C                                                                      -
C***********************************************************************-
```

SPECIFICATIONS FOR INTERFACE FILE CFHIST

```
C*********************************************************************-
C                        REFERENCE 05/01/79                            -
C                                                                      -
CF          CFHIST                                                     -
C                                                                      -
CE          RECORD OF EXPOSURE HISTORY (CONTINUOUS FUELING MODEL)      -
C                                                                      -
C*********************************************************************-

C----------------------------------------------------------------------
CS          FILE STRUCTURE                                             -
CS                                                                     -
CS             RECORD TYPE                          PRESENT IF         -
CS          ================================        ===============    -
CS             FILE IDENTIFICATION                  ALWAYS             -
CS          1D FILE REFERENCE INFORMATION           ALWAYS             -
CS       **********(REPEAT FROM 1 TO IHIST)                            -
CS       *  2D GENERAL INFORMATION                 ALWAYS             -
CS       *  3D TOTAL FLUENCE                       NFLUT = 1          -
CS       *  4D FLUENCE RANGE 1                     NFLU1 = 1          -
CS       *  5D FLUENCE RANGE 2                     NFLU2 = 1          -
CS       *  8D FISSIONS                            NRR1 = 1           -
CS       *  9D EXPOSURE                            NRR2 = 1           -
CS       * 10D ENERGY                              NRR3 = 1           -
CS       * 11D UNDEFINED                           NRR4 = 1           -
CS       **********                                                    -
CS                                                                     -
C----------------------------------------------------------------------

C----------------------------------------------------------------------
CR          FILE IDENTIFICATION                                        -
C                                                                      -
CL    HNAME,(HUSE(I),I=1,2),IVERS                                      -
C                                                                      -
CW          3*MULT + 1                                                 -
C                                                                      -
CD    HNAME          FILE NAME (A6) 'CFHIST'                           -
CD    HUSE           USER IDENTIFICATION (A6)                          -
CD    IVERS          FILE VERSION NUMBER                               -
C                                                                      -
CN    MULT           1 FOR LONG WORD, 2 FOR SHORT WORD MACHINES        -
C                                                                      -
C----------------------------------------------------------------------


C----------------------------------------------------------------------
CR    1D    FILE REFERENCE INFORMATION                                 -
C                                                                      -
CL    EXPH1,EXPH2,EXPH3,EFLU1,EFLU2,IHIST,IZONE,ISZ,                   -
CL    NFLUT,NFLU1,NFLU2,IXPH12,IXPH13,NRR1,NRR2,NRR3,                  -
CL    NRR4,IXPH18,IXPH19,IXPH20,MRTZ,MRTSZ,KRTZ,KRTSZ,                 -
CL    MFDZ1,MFDZ2,MFDSZ1,MFDSZ2,IXPH29,IXPH30                          -
C                                                                      -
CW          30                                                         -
```

(CONT)

```
C                                                                       -
CD    EXPH1        END OF EXPOSURE TIME (DAYS) FROM LAST SET OF DATA    -
CD    EXPH2        RESERVED                                             -
CD    EXPH3        RESERVED                                             -
CD    EFLU1        CUTOFF ENERGY (EV) FOR FIRST FLUENCE                 -
CD    EFLU2        CUTOFF ENERGY (EV) FOR SECOND FLUENCE                -
CD    IHIST        NUMBER OF SETS OF DATA                               -
CD    IZONE        NUMBER OF ZONES                                      -
CD    ISZ          NUMBER OF SUBZONES                                   -
CD    NFLUT        OPTION FOR TOTAL FLUENCE                             -
CD                  0 - NOT PRESENT                                      -
CD                  1 - PRESENT                                          -
CD    NFLU1        OPTION FOR FLUENCE IN FIRST RANGE                    -
CD                  0 - NOT PRESENT                                      -
CD                  1 - PRESENT                                          -
C                                                                        -
CN                  WHEN NFLU1 = 1, EFLU1 MUST BE GREATER THAN 0 AND     -
CN                   LIE IN THE ENERGY RANGE SPECIFIED IN THE            -
CN                   CROSS SECTION DATA                                  -
C                                                                        -
CD    NFLU2        OPTION FOR FLUENCE IN SECOND RANGE                   -
CD                  0 - NOT PRESENT                                      -
CD                  1 - PRESENT                                          -
C                                                                        -
CN                  WHEN NFLU2 = 1, EFLU2 MUST BE GREATER THAN 0 AND     -
CN                   LIE IN THE ENERGY RANGE SPECIFIED IN THE            -
CN                   CROSS SECTION DATA                                  -
C                                                                        -
CD    IXPH12       RESERVED                                             -
CD    IXPH13       RESERVED                                             -
CD    NRR1         OPTION FOR FISSIONS                                  -
CD                  0 - NOT PRESENT                                      -
CD                  1 - PRESENT                                          -
CD    NRR2         OPTION FOR EXPOSURE                                  -
CD                  0 - NOT PRESENT                                      -
CD                  1 - PRESENT                                          -
CD    NRR3         OPTION FOR ENERGY                                    -
CD                  0 - NOT PRESENT                                      -
CD                  1 - PRESENT                                          -
CD    NRR4         OPTION FOR UNDEFINED                                 -
CD                  0 - NOT PRESENT                                      -
CD                  1 - PRESENT                                          -
CD    IXPH18       RESERVED                                             -
CD    IXPH19       RESERVED                                             -
CD    IXPH20       INDICATOR NORMALLY = 0, BUT IS SET = 1 IF            -
CD                  A DISCONTINUITY EXISTS IN EXPOSURE TIMES             -
CD    MRTZ         NUMBER OF ZONE PATHS                                 -
CD    MRTSZ        NUMBER OF SUBZONE PATHS                              -
C                                                                        -
CN                  MRTZ + MRTSZ MUST BE LESS THAN OR EQUAL TO 70        -
C                                                                        -
CD    KRTZ         NUMBER OF ZONES ALONG EACH ZONE PATH                 -
CD    KRTSZ        NUMBER OF SUBZONES ALONG EACH SUBZONE PATH           -
```

(CONT)

```
CD    MFDZ1          ZONE NUMBER CONTAINING FIRST ZONE PATH FEED          -
CD                    MATERIAL COMPOSITION                                -
CD    MFDZ2          ZONE NUMBER CONTAINING LAST ZONE PATH FEED           -
CD                    MATERIAL COMPOSITION                                -
C                                                                         -
CN                   MFDZ2 = MFDZ1                                        -
CN                    OR                                                  -
CN                   MFDZ2 = MFDZ1 + MRTZ - 1                             -
C                                                                         -
CD    MFDSZ1         ZONE NUMBER CONTAINING FIRST SUBZONE PATH FEED       -
CD                    MATERIAL COMPOSITION                                -
CD    MFDSZ2         ZONE NUMBER CONTAINING LAST SUBZONE PATH FEED        -
CD                    MATERIAL COMPOSITION                                -
C                                                                         -
CN                   MFDSZ2 = MFDSZ1                                      -
CN                    OR                                                  -
CN                   MFDSZ2 = MFDSZ1 + MRTSZ - 1                          -
C                                                                         -
CD    IXPH29         RESERVED                                             -
CD    IXPH30         RESERVED                                             -
C                                                                         -
C-------------------------------------------------------------------------

C-------------------------------------------------------------------------
CR    2D     GENERAL INFORMATION                                          -
C                                                                         -
CL    (EPHT(I),I=1,40),(TPHT(MRT),MRT=1,MRTT)                             -
C                                                                         -
CW          40 + MRTT = 40 + (MRTZ + MRTSZ)                               -
C                                                                         -
CD    EPHT(1)        END OF EXPOSURE TIME (DAYS)                          -
CD    EPHT(2)        START OF EXPOSURE TIME (DAYS)                        -
CD    EPHT(3)        FRACTION OF CORE TREATED IN PROBLEM                  -
CD    EPHT(4)        CONVERSION FACTOR, RATIO OF THERMAL ENERGY TO        -
CD                    FISSION + CAPTURE ENERGY (FROM CROSS SECTIONS)      -
CD    EPHT(5-40)     RESERVED                                             -
CD    TPHT           EXPOSURE TIME BY ZONE AND SUBZONE PATH               -
CD                    (DAYS PER ZONE(SUBZONE))                            -
C                                                                         -
C-------------------------------------------------------------------------

C-------------------------------------------------------------------------
CR    3D     TOTAL FLUENCE                                                -
C                                                                         -
CC          PRESENT IF NFLUT = 1                                          -
C                                                                         -
CL    (FLUT(MM),MM=1,ITZSZ),(FLUTD(MRT),MRT=1,MRTT)                       -
C                                                                         -
CW          ITZSZ + MRTT = (IZONE + ISZ) + (MRTZ + MRTSZ)                 -
C                                                                         -
CD    FLUT           TOTAL FLUENCE BY ZONE AND SUBZONE (NEUTRONS/CM**2)   -
CD                    ACCUMULATED ALONG PATHS                             -
CD    FLUTD          DISCHARGE TOTAL FLUENCE BY ZONE AND SUBZONE PATH     -
CD                    (NEUTRONS/CM**2)                                    -
C                                                                         -
C-------------------------------------------------------------------------
```

(CONT)

```
C-----------------------------------------------------------------------
CR    4D    FLUENCE TO FIRST CUTOFF ENERGY EFLU1                        -
C                                                                       -
CC          PRESENT IF NFLU1 = 1                                        -
C                                                                       -
CL    (FLU1(MM),MM=1,ITZSZ),(FLU1D(MRT),MRT=1,MRTT)                     -
C                                                                       -
CW          ITZSZ + MRTT = (IZONE + ISZ) + (MRTZ + MRTSZ)               -
C                                                                       -
CD    FLU1          FLUENCE IN FIRST RANGE BY ZONE AND SUBZONE          -
CD                   (NEUTRONS/CM**2) ACCUMULATED ALONG PATHS           -
CD    FLU1D         DISCHARGE FLUENCE IN FIRST RANGE BY ZONE AND        -
CD                   SUBZONE PATH (NEUTRONS/CM**2)                      -
C                                                                       -
C-----------------------------------------------------------------------

C-----------------------------------------------------------------------
CR    5D    FLUENCE TO SECOND CUTOFF ENERGY EFLU2                       -
C                                                                       -
CC          PRESENT IF NFLU2 = 1                                        -
C                                                                       -
CL    (FLU2(MM),MM=1,ITZSZ),(FLU2D(MRT),MRT=1,MRTT)                     -
C                                                                       -
CW          ITZSZ + MRTT = (IZONE + ISZ) + (MRTZ + MRTSZ)               -
C                                                                       -
CD    FLU2          FLUENCE IN SECOND RANGE BY ZONE AND SUBZONE         -
CD                   (NEUTRONS/CM**2) ACCUMULATED ALONG PATHS           -
CD    FLU2D         DISCHARGE FLUENCE IN SECOND RANGE BY ZONE AND       -
CD                   SUBZONE PATH (NEUTRONS/CM**2)                      -
C                                                                       -
C-----------------------------------------------------------------------

C-----------------------------------------------------------------------
CR    6D    RESERVED                                                    -
C-----------------------------------------------------------------------

C-----------------------------------------------------------------------
CR    7D    RESERVED                                                    -
C-----------------------------------------------------------------------

C-----------------------------------------------------------------------
CR    8D    FISSIONS                                                    -
C                                                                       -
CC          PRESENT IF NRR1 = 1                                         -
C                                                                       -
CL    (RR1(MM),MM=1,ITZSZ),(RR1D(MRT),MRT=1,MRTT)                       -
C                                                                       -
CW          ITZSZ + MRTT = (IZONE + ISZ) + (MRTZ + MRTSZ)               -
C                                                                       -
CD    RR1           FISSIONS BY ZONE AND SUBZONE                        -
CD                   (FISSIONS/CM**3) ACCUMULATED ALONG PATHS           -
CD    RR1D          DISCHARGE FISSIONS BY ZONE AND SUBZONE PATH         -
CD                   (FISSIONS/CM**3)                                   -
C                                                                       -
C-----------------------------------------------------------------------
```

(CONT)

```
C-----------------------------------------------------------------------
CR     9D     EXPOSURE                                                  -
C                                                                       -
CC            PRESENT IF NRR2 = 1                                       -
C                                                                       -
CL     (RR2(MM),MM=1,ITZSZ),(RR2D(MRT),MRT=1,MRTT)                      -
C                                                                       -
CW            ITZSZ + MRTT = (IZONE + ISZ) + (MRTZ + MRTSZ)             -
C                                                                       -
CD     RR2            EXPOSURE BY ZONE AND SUBZONE                      -
CD                     (MEGAWATT(THERMAL)-DAYS/KG) ACCUMULATED ALONG    -
CD                     PATHS                                            -
CD     RR2D           DISCHARGE EXPOSURE BY ZONE AND SUBZONE PATH       -
CD                     (MEGAWATT(THERMAL)-DAYS/KG)                      -
C                                                                       -
C-----------------------------------------------------------------------

C-----------------------------------------------------------------------
CR     10D    ENERGY                                                    -
C                                                                       -
CC            PRESENT IF NRR3 = 1                                       -
C                                                                       -
CL     (RR3(MM),MM=1,ITZSZ),(RR3D(MRT),MRT=1,MRTT)                      -
C                                                                       -
CW            ITZSZ + MRTT = (IZONE + ISZ) + (MRTZ + MRTSZ)             -
C                                                                       -
CD     RR3            ENERGY BY ZONE AND SUBZONE                        -
CD                     (MEGAWATT(THERMAL)-DAYS/CM**3) ACCUMULATED ALONG -
CD                     PATHS                                            -
CD     RR3D           DISCHARGE ENERGY BY ZONE AND SUBZONE PATH         -
CD                     (MEGAWATT(THERMAL)-DAYS/CM**3)                   -
C                                                                       -
C-----------------------------------------------------------------------

C-----------------------------------------------------------------------
CR     11D    UNDEFINED                                                 -
C                                                                       -
CC            PRESENT IF NRR4 = 1                                       -
C                                                                       -
CL     (RR4(MM),MM=1,ITZSZ),(RR4D(MRT),MRT=1,MRTT)                      -
C                                                                       -
CW            ITZSZ + MRTT = (IZONE + ISZ) + (MRTZ + MRTSZ)             -
C                                                                       -
CD     RR4            UNDEFINED BY ZONE AND SUBZONE                     -
CD     RR4D           UNDEFINED BY ZONE AND SUBZONE PATH                -
C                                                                       -
C-----------------------------------------------------------------------

C***********************************************************************-
C                                                                       -
CEOF          CFHIST                                                    -
C                                                                       -
C***********************************************************************-
```

SPECIFICATIONS FOR INTERFACE FILE PTATDN

```
C*********************************************************************-
C                        REFERENCE 02/01/79 ORNL-5180                 -
C                                                                     -
CF          PTATDN                                                    -
C                                                                     -
CE          POINT NUCLIDE DENSITIES                                   -
C                                                                     -
C*********************************************************************-

C---------------------------------------------------------------------
CR          FILE IDENTIFICATION                                       -
C                                                                     -
CL    HNAME,(HUSE(I),I=1,2),IVERS                                     -
C                                                                     -
CW          3*MULT + 1                                                -
C                                                                     -
CD    HNAME          FILE NAME (A6) 'PTATDN'                          -
CD    HUSE           USER IDENTIFICATION (A6)                         -
CD    IVERS          FILE VERSION NUMBER                              -
C                                                                     -
CN    MULT           1 FOR LONG WORD, 2 FOR SHORT WORD MACHINES       -
C                                                                     -
C---------------------------------------------------------------------


C---------------------------------------------------------------------
CR    1D    FILE REFERENCE INFORMATION                                -
C                                                                     -
CL    TIME,XPTD2,XPTD3,NCY,NZPT,NPT,NNS,NBLKPT,IPTD9,IPTD10,          -
CL    NZONE,NSZ,NINTI,NINTJ,NINTK,IPTD16,IPTD17,IPTD18,IPTD19,IPTD20  -
C                                                                     -
CW          20                                                        -
C                                                                     -
CD    TIME           REFERENCE REAL TIME, DAYS                        -
CD    XPTD2          RESERVED                                         -
CD    XPTD3          RESERVED                                         -
CD    NCY            REFERENCE CYCLE NUMBER                           -
CD    NZPT           NUMBER OF ZONES FOR WHICH POINT DATA IS PRESENT  -
CD    NPT            NUMBER OF POINTS                                 -
C                                                                     -
CN                   NPT = NZPNT(1) + NZPNT(2) + ... + NZPNT(NZPT)    -
C                                                                     -
CD    NNS            MAXIMUM NUMBER OF NUCLIDES IN ANY SET            -
CD    NBLKPT         NUMBER OF BLOCKS OF ATOM DENSITY DATA            -
CD                   (MUST DIVIDE EVENLY INTO NPT)                    -
CD    IPTD9          RESERVED                                         -
CD    IPTD10         OPTION TO INCLUDE VOLUME INFORMATION IF .EQ. 1   -
CD    NZONE          NUMBER OF ZONES                                  -
CD                   FOR DOCUMENTATION (IF NONZERO MUST AGREE WITH OTHER -
CD                   PARAMETERS)                                      -
CD    NSZ            NUMBER OF SUBZONES                               -
CD                   FOR DOCUMENTATION (IF NONZERO MUST AGREE WITH OTHER -
CD                   PARAMETERS)                                      -
CD    NINTI          NUMBER OF FIRST DIMENSION FINE MESH INTERVALS    -
CD                   FOR DOCUMENTATION (IF NONZERO MUST AGREE WITH OTHER -
CD                   PARAMETERS)                                      -
```

(CONT)

```
CD    NINTJ          NUMBER OF SECOND DIMENSION FINE MESH INTERVALS      -
CD                   FOR DOCUMENTATION (IF NONZERO MUST AGREE WITH OTHER -
CD                   PARAMETERS)                                         -
CD    NINTK          NUMBER OF THIRD DIMENSION FINE MESH INTERVALS       -
CD                   FOR DOCUMENTATION (IF NONZERO MUST AGREE WITH OTHER -
CD                   PARAMETERS)                                         -
CD    IPTD16         RESERVED                                            -
CD    IPTD17         RESERVED                                            -
CD    IPTD18         RESERVED                                            -
CD    IPTD19         RESERVED                                            -
CD    IPTD20         RESERVED                                            -
C                                                                        -
C-----------------------------------------------------------------------

C-----------------------------------------------------------------------
CR    2D     GENERAL INFORMATION                                         -
C                                                                        -
CL    (MZPNT(NZ),NZ=1,NZPT),(NZPNT(NZ),NZ=1,NZPT),                       -
CL    (LZPNT(NZ),NZ=1,NZPT),(LOCPT(NP),NP=1,NPT)                         -
C                                                                        -
CW          3*NZPT+NPT                                                   -
C                                                                        -
CD    MZPNT(NZ)      ZONE NUMBERS                                        -
CD    NZPNT(NZ)      NUMBER OF POINTS IN EACH ZONE                       -
CD    LZPNT(NZ)      NUCLIDE SET REFERENCE                               -
CD                   FOR DOCUMENTATION                                   -
CD    LOCPT(NP)      POINT LOCATIONS IN THE RANGE 1 TO NINTI*NINTJ*NINTK -
CD                   FOR DOCUMENTATION                                   -
CD                   (MAY BE ZERO IF NINTI,NINTJ AND NINTK ARE ZERO)     -
C                                                                        -
CN                   LOCPT = (K-1)*NINTI*NINTJ + (J-1)*NINTI + I         -
CN                   WHERE I IS FIRST DIMENSION INDEX                    -
CN                         J IS SECOND DIMENSION INDEX                   -
CN                         K IS THIRD DIMENSION INDEX                    -
C                                                                        -
CN                   GIVEN NINTI,NINTJ,NINTK AND LOCPT THE INDICES       -
CN                   I,J,K MAY BE DETERMINED                             -
C                                                                        -
C-----------------------------------------------------------------------

C-----------------------------------------------------------------------
CR    3D     VOLUME INFORMATION                                          -
C                                                                        -
CC          PRESENT IF IPTD10 .EQ. 1                                     -
C                                                                        -
CL    (VZPNT(NZ),NZ=1,NZPT),(VOLPT(NP),NP=1,NPT)                         -
C                                                                        -
CW          NZPT+NPT                                                     -
C                                                                        -
CD    VZPNT(NZ)      ZONE VOLUME (CM**3)                                 -
CD    VOLPT(NP)      POINT VOLUME (CM**3)                                -
C                                                                        -
C-----------------------------------------------------------------------
```

(CONT)

```
C-----------------------------------------------------------------------
CR    4D    POINT NUCLIDE DENSITIES                                     -
C                                                                       -
CL    ((PDEN(N,J),N=1,NNS),J=JL,JU)----SEE STRUCTURE BELOW----          -
C                                                                       -
CW          NNS*((NPT-1)/NBLKPT+1)                                      -
C                                                                       -
CC    DO 1 M=1,NBLKPT                                                   -
CC  1 READ(I) *LIST AS ABOVE*                                           -
C                                                                       -
CC        WITH M AS THE BLOCK INDEX, JL=(M-1)*((NPT-1)/NBLKPT+1)+1      -
CC        AND JU=M*((NPT-1)/NBLKPT+1)                                   -
C                                                                       -
CD    PDEN(N,J)      ATOMIC DENSITY OF NUCLIDE ORDERED N IN THE         -
CD                   ASSOCIATED SET GIVEN IN ORDER FOR EACH POINT       -
C                                                                       -
C-----------------------------------------------------------------------

C***********************************************************************-
C                                                                       -
CEOF        PTATDN                                                      -
C                                                                       -
C***********************************************************************-
```

SPECIFICATIONS FOR INTERFACE FILE QNATDN

```
C*********************************************************************-
C                      REFERENCE 02/01/79 ORNL-5180                   -
C                                                                     -
CF          QNATDN                                                    -
C                                                                     -
CE          ZONE(SUBZONE) NUCLIDE DENSITIES (DISCHARGE)               -
C                                                                     -
C*********************************************************************-

C---------------------------------------------------------------------
CR          FILE IDENTIFICATION                                       -
C                                                                     -
CL    HNAME,(HUSE(I),I=1,2),IVERS                                     -
C                                                                     -
CW          3*MULT + 1                                                -
C                                                                     -
CD    HNAME          FILE NAME (A6) 'QNATDN'                          -
CD    HUSE           USER IDENTIFICATION (A6)                         -
CD    IVERS          FILE VERSION NUMBER                              -
C                                                                     -
CN    MULT           1 FOR LONG WORD, 2 FOR SHORT WORD MACHINES       -
C                                                                     -
C---------------------------------------------------------------------


C---------------------------------------------------------------------
CR    1D    FILE REFERENCE INFORMATION                                -
C                                                                     -
CL    TIME,NCY,NTZSZ,NNS,NBLKAD                                       -
C                                                                     -
CW          5                                                         -
C                                                                     -
CD    TIME           REFERENCE REAL TIME, DAYS                        -
CD    NCY            REFERENCE CYCLE NUMBER                           -
CD    NTZSZ          NUMBER OF ZONES PLUS NUMBER OF SUBZONES          -
CD    NNS            MAXIMUM NUMBER OF NUCLIDES IN ANY SET            -
CD    NBLKAD         NUMBER OF BLOCKS OF ATOM DENSITY DATA            -
CD                   (MUST DIVIDE EVENLY INTO NTZSZ)                  -
C                                                                     -
C---------------------------------------------------------------------
```

(CONT)

```
C-----------------------------------------------------------------------
CR    2D    ZONE(SUBZONE) NUCLIDE DENSITIES (DISCHARGE)                 -
C                                                                       -
CL    ((ADEN(N,J),N=1,NNS),J=JL,JU)----SEE STRUCTURE BELOW----          -
C                                                                       -
CW          NNS*((NTZSZ-1)/NBLKAD+1)                                    -
C                                                                       -
CC    DO 1 M=1,NBLKAD                                                   -
CC  1 READ(I) *LIST AS ABOVE*                                           -
C                                                                       -
CC        WITH M AS THE BLOCK INDEX, JL=(M-1)*((NTZSZ-1)/NBLKAD+1)+1    -
CC        AND JU=M*((NTZSZ-1)/NBLKAD+1)                                 -
C                                                                       -
CD    ADEN(N,J)      ATOMIC DENSITY OF NUCLIDE ORDERED N IN THE         -
CD                   ASSOCIATED SET GIVEN IN ORDER FOR EACH ZONE        -
CD                   FOLLOWED IN ORDER FOR EACH SUBZONE                 -
C                                                                       -
C-----------------------------------------------------------------------

C***********************************************************************-
C                                                                       -
CEOF        QNATDN                                                      -
C                                                                       -
C***********************************************************************-
```

SPECIFICATIONS FOR INTERFACE FILE ZNTEMP

```
C*********************************************************************-
C                     REFERENCE 02/01/79 ORNL-5180                    -
C                                                                     -
CN          ORIGINAL SPECS REVISED TO INCLUDE SUBZONE DATA WHEN NEEDED -
C                                                                     -
CF          ZNTEMP                                                    -
C                                                                     -
CE          ZONE TEMPERATURE DATA                                     -
C                                                                     -
C*********************************************************************-

C---------------------------------------------------------------------
CR         FILE IDENTIFICATION                                        -
C                                                                     -
CL    HNAME,(HUSE(I),I=1,2),IVERS                                     -
C                                                                     -
CW          3*MULT + 1                                                -
C                                                                     -
CD    HNAME          FILE NAME (A6) 'ZNTEMP'                          -
CD    HUSE           USER IDENTIFICATION (A6)                         -
CD    IVERS          FILE VERSION NUMBER                              -
C                                                                     -
CN    MULT           1 FOR LONG WORD, 2 FOR SHORT WORD MACHINES       -
C                                                                     -
C---------------------------------------------------------------------


C---------------------------------------------------------------------
CR          FILE REFERENCE INFORMATION                                -
C                                                                     -
CL    NRZ,NZT,NSZ,(NA(I),I=1,17)                                      -
C                                                                     -
CW          20                                                        -
C                                                                     -
CD    NRZ            NUMBER OF REACTOR ZONES , NOT ZERO               -
CD    NZT            NUMBER OF TEMPERATURES FOR EACH ZONE  .LE. 5     -
CD    NSZ            NUMBER OF REACTOR SUBZONES                       -
CD    NA             RESERVED                                         -
C                                                                     -
CN        OFTEN A SINGLE TEMPERATURE WILL BE CARRIED WHICH SERVES AS A -
CN        REFERENCE, AS TO EXPRESS THE EFFECTIVE TEMPERATURE OF THE ZONE-
CN        WHICH MAY BE USED SIMPLY FOR SUCH PURPOSE AS CROSS SECTION  -
CN        CORRELATION.  EVEN IF TWO TEMPERATURES ARE CARRIED TO INCLUDE -
CN        THE COOLANT TEMPERATURE, THE FIRST IS INTENDED TO ADMIT SUCH -
CN        SIMPLE APPLICATION  (LINEAR INTERPOLATION OF CROSS SECTIONS  -
CN        IS ADMITTED WHICH MAY BE DONE AT THE MACROSCOPIC LEVEL USING -
CN        TWO MICROSCOPIC CROSS SECTION SETS).                        -
C                                                                     -
C                                                                     -
C---------------------------------------------------------------------
```

(CONT)

```
C-----------------------------------------------------------------------
CR          ZONE TEMPERATURES                                          -
C                                                                      -
CC          ALWAYS PRESENT                                             -
C                                                                      -
CL     ((ZTEMP(I,M),I=1,NZT),M=1,NRZ)                                  -
C                                                                      -
CW          NZT*NRZ                                                    -
C                                                                      -
CD    ZTEMP          TEMPERATURE OF REFERENCE I IN ZONE M (DEGREES C)  -
CD                         I     REFERENCE                            -
CD                         -     ---------                            -
CD                         1     ACTINIDES (FUEL) --- REFERENCE       -
CD                         2     COOLANT                              -
CD                         3     MODERATOR                            -
CD                         4     STRUCTURAL                           -
CD                         5     SPECIAL                              -
C                                                                      -
C-----------------------------------------------------------------------

C-----------------------------------------------------------------------
CR          SUBZONE TEMPERATURES                                       -
C                                                                      -
CC          PRESENT IF NSZ .NE. 0                                      -
C                                                                      -
CL     ((SZTEMP(I,M),I=1,NZT),M=1,NSZ)                                 -
C                                                                      -
CW          NZT*NSZ                                                    -
C                                                                      -
CD    SZTEMP         TEMPERATURE OF REFERENCE I IN SUBZONE M (DEGREES C) -
C                                                                      -
CN                   SEE NOTES ABOUT ZONE TEMPERATURE DATA             -
C                                                                      -
C-----------------------------------------------------------------------

C***********************************************************************-
C                                                                      -
CEOF        ZNTEMP                                                     -
C                                                                      -
C***********************************************************************-
```

SPECIFICATIONS FOR INTERFACE FILE ZNPOWD

```
C*********************************************************************-
C                      REFERENCE 02/01/79 ORNL-5180                   -
C                                                                     -
CN          ORIGINAL SPECS REVISED TO INCLUDE SUBZONE DATA WHEN NEEDED -
C                                                                     -
CF          ZNPOWD                                                    -
C                                                                     -
CE          ZONE AVERAGE AND PEAK POWER DENSITY                       -
C                                                                     -
C*********************************************************************-

C---------------------------------------------------------------------
CR          FILE IDENTIFICATION                                       -
C                                                                     -
CL    HNAME,(HUSE(I),I=1,2),IVERS                                     -
C                                                                     -
CW          3*MULT + 1                                                -
C                                                                     -
CD    HNAME          FILE NAME (A6) 'ZNPOWD'                          -
CD    HUSE           USER IDENTIFICATION (A6)                         -
CD    IVERS          FILE VERSION NUMBER                              -
C                                                                     -
CN    MULT           1 FOR LONG WORD, 2 FOR SHORT WORD MACHINES       -
C                                                                     -
C---------------------------------------------------------------------


C---------------------------------------------------------------------
CR    1D    FILE REFERENCE INFORMATION                                -
C                                                                     -
CL    POW,TIME,XZPD3,XZPD4,XZPD5,XZPD6,XZPD7,XZPD8,                   -
CL    NZONE,IZPD10,IZPD11,NSZ,IZPD13,IZPD14,IZPD15,                   -
CL    IZPD16,IZPD17,IZPD18,IZPD19,IZPD20                              -
C                                                                     -
CW          20                                                        -
C                                                                     -
CD    POW            REFERENCE REACTOR POWER LEVEL, WATTS             -
CD    TIME           REFERENCE TIME IN THE HISTORY, DAYS              -
CD    XZPD3          RESERVED                                         -
CD    XZPD4          RESERVED                                         -
CD    XZPD5          RESERVED                                         -
CD    XZPD6          RESERVED                                         -
CD    XZPD7          RESERVED                                         -
CD    XZPD8          RESERVED                                         -
CD    NZONE          NUMBER OF REACTOR ZONES                          -
CD    IZPD10         OPTION FOR PEAK ZONE DATA                        -
CD    IZPD11         OPTION ON FILE CONTENTS                          -
CD                   0- ZONE POWER DENSITY INCLUDES ANY SUBZONE       -
CD                      CONTRIBUTION (ALTHOUGH NSZ MAY BE ZERO)       -
CD                   1- ZONE POWER DENSITY AND SUBZONE POWER DENSITY  -
CD                      CARRIED SEPARATELY                            -
CD    NSZ            NUMBER OF REACTOR SUBZONES                       -
CD    IZPD13         OPTION FOR REFERENCE INFORMATION                 -
```

(CONT)

```
CD    IZPD14        RESERVED                                          -
CD    IZPD15        RESERVED                                          -
CD    IZPD16        RESERVED                                          -
CD    IZPD17        RESERVED                                          -
CD    IZPD18        RESERVED                                          -
CD    IZPD19        RESERVED                                          -
CD    IZPD20        RESERVED                                          -
C                                                                     -
C---------------------------------------------------------------------

C---------------------------------------------------------------------
CR    2D    ZONE AVERAGE POWER DENSITIES (TOTAL)                      -
C                                                                     -
CC          PRESENT IF IZPD11 .EQ. 0                                  -
C                                                                     -
CL    (ZPOW(M),M=1,NZONE)                                             -
C                                                                     -
CW          NZONE                                                     -
C                                                                     -
CD    ZPOW          ZONE AVERAGE POWER DENSITY, WATTS/CC              -
C                                                                     -
CN          ZPOW(M) = VFPA(M)*ZPD(M) + SUM(OVER J FOR NZSZ(J) = M) OF -
CN                    VRSZ(J)*SZPD(J)                                 -
C                                                                     -
C---------------------------------------------------------------------

C---------------------------------------------------------------------
CR    3D    PEAK ZONE POWER DENSITIES                                 -
C                                                                     -
CC          PRESENT IF IZPD11 .EQ. 0 AND IZPD10 .EQ. 1                -
C                                                                     -
CL    (PZPOW(M),M=1,NZONE)                                            -
C                                                                     -
CW          NZONE                                                     -
C                                                                     -
CD    PZPOW         PEAK ZONE POWER DENSITY AT THE MESH POINT LEVEL,  -
CD                  WATTS/CC                                          -
C                                                                     -
C---------------------------------------------------------------------

C---------------------------------------------------------------------
CR    4D    ZONE AVERAGE POWER DENSITIES                              -
C                                                                     -
CC          PRESENT IF IZPD11 .EQ. 1                                  -
C                                                                     -
CL    (ZPD(M),M=1,NZONE)                                              -
C                                                                     -
CW          NZONE                                                     -
C                                                                     -
CD    ZPD           ZONE AVERAGE POWER DENSITY, WATTS/CC              -
C                                                                     -
C---------------------------------------------------------------------
```

(CONT)

```
C-----------------------------------------------------------------------
CR     5D     SUBZONE AVERAGE POWER DENSITIES                          -
C                                                                      -
CC            PRESENT IF IZPD11 .EQ. 1 AND NSZ .GT. 0                  -
C                                                                      -
CL     (SZPD(J),J=1,NSZ)                                               -
C                                                                      -
CW            NSZ                                                      -
C                                                                      -
CD     SZPD           SUBZONE AVERAGE POWER DENSITY, WATTS/CC         -
C                                                                      -
C-----------------------------------------------------------------------

C-----------------------------------------------------------------------
CR     6D     SUBZONE TO ZONE CORRESPONDENCE                           -
C                                                                      -
CC            PRESENT IF IZPD13 .EQ. 1 AND NSZ .GT. 0                  -
C                                                                      -
CL     (NZSZ(J),J=1,NSZ)                                               -
C                                                                      -
CW            NSZ                                                      -
C                                                                      -
CD     NZSZ           ZONE CONTAINING SUBZONE                         -
C                                                                      -
C-----------------------------------------------------------------------

C-----------------------------------------------------------------------
CR     7D     ZONE VOLUME INFORMATION                                  -
C                                                                      -
CC            PRESENT IF IZPD13 .EQ. 1                                 -
C                                                                      -
CL     (VOLZ(M),M=1,NZONE)                                             -
C                                                                      -
CW            NZONE                                                    -
C                                                                      -
CD     VOLZ           ZONE VOLUMES, CC                                -
C                                                                      -
C-----------------------------------------------------------------------

C-----------------------------------------------------------------------
CR     8D     VOLUME FRACTION INFORMATION                              -
C                                                                      -
CC            PRESENT IF IZPD13 .EQ. 1                                 -
C                                                                      -
CL     (VFPA(M),M=1,NZONE),(VRSZ(J),J=1,NSZ)                           -
C                                                                      -
CW            NZONE + NSZ                                              -
C                                                                      -
CD     VFPA           VOLUME FRACTIONS FOR PRIMARY ZONE ASSIGNMENTS   -
CD     VRSZ           VOLUME FRACTIONS FOR SUBZONE ASSIGNMENTS        -
C                                                                      -
C-----------------------------------------------------------------------
```

(CONT)

```
C*********************************************************************-
C                                                                     -
CEOF        ZNPOWD                                                    -
C                                                                     -
C*********************************************************************-
```

SPECIFICATIONS FOR INTERFACE FILE PERTUB

```
C*********************************************************************-
C                        REVISED 04/01/80                             -
C                                                                     -
CF         PERTUB                                                     -
C                                                                     -
CE         PERTURBATION DATA - REGULAR AND ADJOINT FLUX INTEGRALS     -
C                                                                     -
C*********************************************************************-

C---------------------------------------------------------------------
CR         FILE IDENTIFICATION                                        -
C                                                                     -
CL    HNAME,(HUSE(I),I=1,2),IVERS                                     -
C                                                                     -
CW    3*MULT + 1                                                      -
C                                                                     -
CD    HNAME              HOLLERITH FILE NAME - PERTUB - (A6)          -
CD    HUSE(I)            HOLLERITH USER IDENTIFICATION - (A6)         -
CD    IVERS              FILE VERSION NUMBER                          -
C                                                                     -
CN    MULT          1 FOR LONG WORD, 2 FOR SHORT WORD MACHINES        -
C                                                                     -
C---------------------------------------------------------------------


C---------------------------------------------------------------------
CR          FILE REFERENCE INFORMATION (1D RECORD)                    -
C                                                                     -
CL    BIGDAD,XK,CR,X1,NZONE,NGROUP,IND,N1,N2,N3,N4                    -
C                                                                     -
CW    11                                                              -
C                                                                     -
CD    BIGDAD             BIG-DADDY NORMALIZATION FACTOR               -
CD                          INTEGRAL  ADJOINT*CHI*FORWARD*NUSIGF/K    -
CD    XK                 MULTIPLICATION FACTOR (K-EFF)                -
CD    CR                 PRIMITIVE FISSILE CONVERSION RATIO           -
CD    X1                 ABSORPTION RATE IN FISSILE NUCLIDES          -
CD    NZONE              NUMBER OF GEOMETRIC ZONES                    -
CD    NGROUP             NUMBER OF NEUTRON ENERGY GROUPS              -
CD    IND                OPTION FOR INCLUDING TRANSPORT INTEGRALS     -
CD    N1                 FLAG ON PROBLEM TYPES -                      -
CD                         0- MEANING NO PROBLEMS WERE SOLVED, OR THEY -
CD                            WERE EIGENVALUE PROBLEMS                -
CD                         1  IS ADDED TO THIS IF A FIXED SOURCE FORWARD -
CD                            PROBLEM WAS SOLVED                      -
CD                         10 IS ADDED TO THIS IF A FIXED SOURCE ADJOINT -
CD                            PROBLEM WAS SOLVED                      -
C     N2                 RESERVED FOR FUTURE USE                      -
C     N3                 RESERVED FOR FUTURE USE                      -
C     N4                 RESERVED FOR FUTURE USE                      -
C---------------------------------------------------------------------
```

(CONT)

```
C-----------------------------------------------------------------------
CR          INTEGRALS FOR PRODUCTION MACRO (2D RECORD)                  -
C                                                                       -
CL    ((T(M,K),M=1,NZONE),K=1,NGROUP)                                   -
C                                                                       -
CW    NZONE*NGROUP                                                      -
C                                                                       -
CD    T                  FLUX(K)*CHI(KK)*ADJOINT(KK), INTEGRAL OVER KK  -
CD                          AND VOLUME, DIVIDED BY THE MULTIPLICATION   -
CD                           FACTOR, VOLUME INTEGRALS                   -
C                                                                       -
C-----------------------------------------------------------------------

C-----------------------------------------------------------------------
CR         FLUX, ADJOINT VOLUME INTEGRALS (3D RECORD)                   -
C                                                                       -
CL.   ((S(M,KK),M=1,NZONE),KK=1,NGROUP)-----NOTE STRUCTURE BELOW-----   -
C                                                                       -
CW    NZONE*NGROUP                                                      -
C                                                                       -
CS    DO 1 K=1,NGROUP                                                   -
CS  1 READ(N) *LIST AS ABOVE*                                           -
C                                                                       -
CD    S                  FLUX(KK)*ADJOINT(K)  VOLUME INTEGRALS         -
CD                           (INTO GROUP K)                             -
C                                                                       -
C-----------------------------------------------------------------------

C-----------------------------------------------------------------------
CR          INTEGRALS FOR TRANSPORT (4D RECORD)                         -
C                                                                       -
CC          PRESENT ONLY IF IND.GT.0                                    -
C                                                                       -
CL    ((D(M,K),M=1,NZONE),K=1,NGROUP)                                   -
C                                                                       -
CW    NZONE*NGROUP                                                      -
C                                                                       -
CD    D                  FLUX(K)*ADJOINT(K)  VOLUME INTEGRALS          -
C-----------------------------------------------------------------------

C***********************************************************************-
C                                                                       -
CEOF        PERTUB                                                      -
C                                                                       -
C***********************************************************************-
```

SPECIFICATIONS FOR INTERFACE FILE FISSOR

```
C*********************************************************************-
C                        REVISED 04/01/80                             -
C                                                                     -
CF          FISSOR                                                    -
C                                                                     -
CE          FISSION SOURCE BY INTERVAL AND DISTRIBUTION FUNCTION      -
C                                                                     -
C*********************************************************************-

C---------------------------------------------------------------------
CR          FILE IDENTIFICATION                                       -
C                                                                     -
CL    HNAME,(HUSE(I),I=1,2),IVERS                                     -
C                                                                     -
CW    3*MULT + 1                                                      -
C                                                                     -
CD    HNAME              HOLLERITH FILE NAME - FISSOR - (A6)          -
CD    HUSE(I)            HOLLERITH USER IDENTIFICATION (A6)           -
CD    IVERS              FILE VERSION NUMBER                          -
C                                                                     -
CN    MULT          1 FOR LONG WORD, 2 FOR SHORT WORD MACHINES        -
C                                                                     -
C---------------------------------------------------------------------


C---------------------------------------------------------------------
CR          FILE REFERENCE INFORMATION (1D RECORD)                    -
C                                                                     -
CL    TIME, POWER, KEFF, IM, JM, KM, NCY, NG, NZ                      -
C                                                                     -
CW    9                                                               -
C                                                                     -
CD    TIME               REFERENCE REAL TIME, DAYS                    -
CD    POWER              POWER LEVEL FOR ACTUAL NEUTRONICS PROBLEM,   -
CD                            WATTS THERMAL                           -
CD    KEFF               MULTIPLICATION FACTOR                        -
CD    IM                 NUMBER OF FIRST DIMENSION FINE INTERVALS     -
CD    JM                 NUMBER OF SECOND DIMENSION FINE INTERVALS    -
C                                                                     -
CN          FOR SPECIAL TRIANGULAR GEOMETRIES, IM IS THE NUMBER OF   *-
CN           TRIANGLES ON EACH PLANE AND JM IS NOT DEFINED (SET TO 1) *-
C                                                                     -
CD    KM                 NUMBER OF THIRD DIMENSION FINE INTERVALS     -
CD    NCY                REFERENCE COUNT (CYCLE NUMBER)               -
CD    NG                 NUMBER OF ENERGY GROUPS                      -
CD    NZ                 NUMBER OF ZONES                              -
C                                                                     -
C---------------------------------------------------------------------
```

(CONT)

```
C-----------------------------------------------------------------------
CR          FISSION SOURCE DISTRIBUTION FUNCTION (2D RECORD)            -
C                                                                       -
CL     ((CHIM(N,K),N=1,NZ),K=1,NG)                                      -
C                                                                       -
CW     NG*NZ                                                            -
C                                                                       -
CD     CHIM(N,K)    SOURCE OF NEUTRONS IN GROUP K, ZONE N               -
C                                                                       -
C-----------------------------------------------------------------------

C-----------------------------------------------------------------------
CR          FISSION SOURCE VALUES (3D RECORD)                           -
C                                                                       -
CL     ((PFS(I,J),I=1,IM),J=1,JM)-----NOTE STRUCTURE BELOW-----         -
C                                                                       -
CW     IM*JM                                                            -
C                                                                       -
CS     DO 1 K=1,KM                                                      -
CS   1 READ(N) *LIST AS ABOVE*                                          -
C                                                                       -
CD     PFS(I,J)          FISSION SOURCE BY INTERVAL, NEUTRONS/SEC/CC   -
C                                                                       -
C-----------------------------------------------------------------------

C***********************************************************************-
C                                                                       -
CEOF        FISSOR                                                      -
C                                                                       -
C***********************************************************************-
```

SPECIFICATIONS FOR INTERFACE FILE RODSET

```
C*********************************************************************-
C                        REVISED 04/01/80                             -
C                                                                     -
CF          RODSET                                                    -
C                                                                     -
CE          CONTROL ROD REFERENCE POSITIONING DATA                    -
C                                                                     -
C*********************************************************************-

C---------------------------------------------------------------------
CR          FILE IDENTIFICATION                                       -
C                                                                     -
CL     HNAME,(HUSE(I),I=1,2),IVERS                                    -
C                                                                     -
CW     (3*MULT+1) = NUMBER OF WORDS.                                  -
C                                                                     -
CD     HNAME          FILE NAME (A6) 'RODSET'.                        -
CD     HUSE           USER IDENTIFICATION (A6).                       -
CD     IVERS          FILE VERSION NUMBER.                            -
C                                                                     -
CN     MULT           1 FOR LONG WORD, 2 FOR SHORT WORD MACHINES.     -
C                                                                     -
C                                                                     -
C---------------------------------------------------------------------


C---------------------------------------------------------------------
CR          FILE REFERENCE INFORMATION  (1D RECORD)                   -
C                                                                     -
CL     NCRN,NFRN,NCR,NERT,NSRPS,NCYD,NSE,NOE,ISV,MRW,MRI,NSH,         -
CL     (I1(I),I=1,8)                                                  -
C                                                                     -
CW     (20) = NUMBER OF WORDS.                                        -
C                                                                     -
CD     NCRN           NUMBER OF CONTROL ROD ZONE NUCLIDES.            -
C                                                                     -
CD     NFRN           NUMBER OF CONTROL ROD FOLLOWER ZONE NUCLIDES.   -
C                                                                     -
CD     NCR            NUMBER OF DIFFERENT ZONE SETS (RODS).           -
C                                                                     -
CD     NERT           NUMBER OF ENTRIES IN THE REFERENCE TABLE OF ROD -
CD                     ZONES.                                         -
C                                                                     -
CD     NSRPS          NUMBER OF SETS OF ROD POSITION SPECIFICATIONS.  -
C                                                                     -
CD     NCYD           NUMBER OF POINTS IN THE HISTORY (BETWEEN REFUELINGS)-
CD                    FOR WHICH ROD POSITIONING DATA IS SPECIFIED.    -
C                                                                     -
CD     NSE            NUMBER OF ZONES FOR WHICH SPECIAL FULL ROD INSERTION-
CD                    (OR WITHDRAWAL) DATA ARE SPECIFIED BELOW, USED FOR -
CD                    'RODINS' OPTION IX(10)=-2, OR =-1. IF FULL ROD  -
CD                    INSERTION (WITHDRAWAL) IS SPECIFIED AND THIS SPECIAL-
CD                    DATA IS NOT PRESENT, THE MATERIAL ADR (ADF) WILL BE -
CD                    INSERTED IN ALL ROD ZONES NRZ BELOW.            -
```

(CONT)

```
C                                                                       -
CD    NOE            OPTION ON USING FULL ROD INSERTION (WITHDRAWAL)    -
CD                   DATA.                                              -
CD                     0- USE ONLY SPECIFICATIONS GIVEN BY SPECIAL      -
CD                        FULL ROD INSERTION (WITHDRAWAL) DATA.         -
CD                     1- INSERT MATERIAL ADR (ADF) IN ALL ROD ZONES NRZ -
CD                        FIRST, THEN APPLY SPECIAL FULL ROD INSERTION  -
CD                        (WITHDRAWAL) DATA IN AN OVERLAY SENSE.        -
C                                                                       -
CN                   *****NOTE FOR FULL ROD INSERTION, OR FULL ROD      -
CN                        WITHDRAWAL, ALL ROD AND FOLLOWER CONCENTRATIONS-
CN                        ARE ZEROED IN THE SPECIFIED ZONES PRIOR TO    -
CN                        THE INSERTION.                                -
C                                                                       -
CD    ISV            OPTION ON SAVE DATA RECORDS.                       -
CD                     0- NO SAVE DATA RECORDS PRESENT ON THIS FILE.    -
CD                     GT.0- THE TWO SAVE DATA RECORDS ARE PRESENT ON   -
CD                           THIS FILE.                                 -
C                                                                       -
CN                   *****NOTE - THE SAVE DATA RECORDS ARE A RECORD OF  -
CN                        THE POSITIONING. IT IS RECOMENDED THAT THIS   -
CN                        OPTION BE 0 IN WHICH CASE THE CODE CREATES    -
CN                        THE TWO RECORDS ON FIRST ACCESS.              -
C                                                                       -
CD    MRW            OPTION ON CONCENTRATIONS IN MAKE-UP ZONE FOR ROD   -
CD                   WITHDRAWAL (NZI .GT. 0 BELOW) FOR 'RODINS' OPTION  -
CD                   IX(10) GE. 0.                                      -
CD                     0- ZERO ROD CONCENTRATIONS AND REPLACE FOLLOWER  -
CD                        CONCENTRATIONS WITH ADF DATA (IF PRESENT).    -
CD                     1- ONLY ZERO ROD CONCENTRATIONS.                 -
CD                     2- DO NOT CHANGE ANY CONCENTRATIONS.             -
C                                                                       -
CD    MRI            OPTION ON CONCENTRATIONS IN MAKE-UP ZONE FOR ROD   -
CD                   INSERTION (NZI .LT. 0 BELOW) FOR 'RODINS' OPTION   -
CD                   IX(10) GE. 0.                                      -
CD                     0- REPLACE ROD CONCENTRATIONS WITH ADR DATA.     -
CD                     1- DO NOT CHANGE ANY CONCENTRATIONS.             -
CD                     2- ONLY ZERO ROD CONCENTRATIONS.                 -
CD                     3- ZERO ROD CONCENTRATIONS AND REPLACE FOLLOWER  -
CD                        CONCENTRATIONS WITH ADF DATA (IF PRESENT).    -
C                                                                       -
CD    NSH            NUMBER OF ZONES FOR WHICH SPECIAL SHUT-DOWN ROD DATA-
CD                   ARE GIVEN BELOW. THIS DATA MUST BE PRESENT IF THE  -
CD                   'RODINS' OPTION IX(11)=1.                          -
C                                                                       -
C-----------------------------------------------------------------------
```

(CONT)

```
C-----------------------------------------------------------------------
CR          REFERENCE NUCLIDE DATA (2D RECORD)                         -
C                                                                      -
CC          PRESENT IF NCRN + NFRN .GT. 0                              -
C                                                                      -
CL    (HNR(N),N=1,NCRN),(HNF(N),N=1,NFRN),(ADR(N),N=1,NCRN),(ADF(N),N=1,-
CL    NFRN)                                                            -
C                                                                      -
CW    ((MULT+1)*(NCRN+NFRN)) = NUMBER OF WORDS.                        -
C                                                                      -
CD    HNR           ROD ZONE NUCLIDE USER UNIQUE NAME, HISONM (A6).    -
C                                                                      -
CD    HNF           FOLLOWER ZONE NUCLIDE USER UNIQUE NAME, HISONM (A6).-
CD                  MAY INCLUDE NUCLIDES IN THE ROD LIST HNR.          -
C                                                                      -
CD    ADR           ROD NUCLIDE DENSITIES (ATOMS/BN-CM) - MAY BE ROD   -
CD                  INSERTION FOLLOWER (TOP OF ROD) MATERIAL. IF SO    -
CD                  IT CANNOT BE USED FOR FULL ROD INSERTION.          -
C                                                                      -
CD    ADF           FOLLOWER NUCLIDE DENSITY (ATOMS/BN-CM) - USED FOR  -
CD                  ROD REMOVAL (BOTTOM OF ROD).                       -
C                                                                      -
C-----------------------------------------------------------------------
```

```
C-----------------------------------------------------------------------
CR          REFERENCE TABLE OF ROD ZONES (3D RECORD)                   -
C                                                                      -
CC          ALWAYS PRESENT                                             -
C                                                                      -
CL    (NRZ(I),I=1,NERT)                                                -
C                                                                      -
CW    (NERT) = NUMBER OF WORDS.                                        -
C                                                                      -
CD    NRZ           NUMBER OF A ZONE.                                  -
C                                                                      -
CN          THIS DATA IS PRESENTED IN SETS OF ZONE NUMBERS, EACH SET   -
CN          REPRESENTING A ROD OR BLOCK OF THEM. EACH SET OF DATA IS   -
CN          FOLLOWED BY A ZERO ENTRY.  REFERENCE TO A SET IS BY ORDER OF-
CN          PRESENTATION (=J IN NZI(J,L) BELOW). THE ORDERING OF THE   -
CN          ZONE NUMBERS IN EACH SET INDICATES ROD END POSITION BY     -
CN          INSERTION. THUS ROD INSERTION IN ONLY THE FIRST ZONE GIVEN -
CN          WOULD BE MINIMUM INSERTION AND ROD INSERTION IN THE LAST   -
CN          ZONE IN THE LIST WOULD BE MAXIMUM INSERTION.               -
CN          IF THE LAST ZONE NUMBER IN A SET IS THE SAME AS THE FIRST  -
CN          ZONE NUMBER, THIS INDICATES A 'CLOSED-LOOP' SET OF ZONES.  -
CN          A 'CLOSED-LOOP' SET OF ZONES IS NOT A SET OF ROD ZONES, BUT -
CN          IS A SET IN WHICH ALL NUCLIDES IN THE ZONES MAY BE         -
CN          INTERCHANGED. ONLY THE OPTIONS IX(10) =0 OR =1 APPLY AND   -
CN          THESE SETS WILL BE IGNORED FOR ALL OTHERS. SEE NZI BELOW.  -
CN          THERE MAY BE SUBZONES IN THE PROBLEM, BUT THE ROD AND      -
CN          FOLLOWER NUCLIDES MUST BE ASSIGNED TO AND HANDLED ON A     -
CN          ZONE BASIS, NOT SUBZONE.                                   -
C                                                                      -
CN          NCR SETS OF ZONE NUMBERS ARE REQUIRED.                     -
C                                                                      -
C-----------------------------------------------------------------------
```

(CONT)

```
C-----------------------------------------------------------------------
C                                                                      -
CS          THE FOLLOWING RECORDS ARE IN SETS OF TWO, NSRPS OF THEM.   -
C                                                                      -
C-----------------------------------------------------------------------


C-----------------------------------------------------------------------
CR          REFERENCE POINT IN HISTORY  (4D RECORD)                    -
C                                                                      -
CC          PRESENT IF NCYD .GT. 0                                     -
C                                                                      -
CL    (FEH(L),L=1,NCYD),NOP,(J1(I),I=1,10)                             -
C                                                                      -
CW    (NCYD+11) = NUMBER OF WORDS.                                     -
C                                                                      -
CD    FEH           FRACTION OF THE EXPOSURE TIME BETWEEN FUELINGS,    -
CD                   0 MEANS START, 1.0 MEANS END, GT 1.0 IS GARBAGE.  -
C                                                                      -
CD    NOP           OPTION DISCUSSED BELOW.                            -
C                                                                      -
C-----------------------------------------------------------------------


C-----------------------------------------------------------------------
CR          REFERENCE SET OF ROD POSITION SPECIFICATIONS  (5D RECORD)  -
C                                                                      -
CC          PRESENT IF NCYD .GT. 0                                     -
C                                                                      -
CL    ((NZI(J,L),J=1,NCR),L=1,NCYD)                                    -
C                                                                      -
CW    (NCR*NCYD) = NUMBER OF WORDS.                                    -
C                                                                      -
CD    NZI           HAS A MEANING WHICH IS DEPENDENT ON OPTION NOP.    -
C                                                                      -
C                                                                      -
CN                   IF NOP IS 0                                       -
C                                                                      -
CN          NZI IS THE NUMBER OF THE LAST ZONE IN SET J (NRZ ABOVE)    -
CN          HAVING ROD INSERTION AT POINT L IN THE HISTORY, I.E., ALL  -
CN          ROD AND FOLLOWER MATERIAL CONCENTRATIONS ARE ZEROED IN ALL -
CN          ZONES IN THE SET - THEN ROD MATERIAL (CONCENTRATIONS ADR)  -
CN          IS INSERTED IN ORDER IN ALL ZONES IN THE SET THROUGH NZI AND-
CN          FOLLOWER (CONCENTRATIONS ADF) IS INSERTED IN ORDER FOR ALL -
CN          REMANING ZONES IN THE SET. NOTE THAT ONLY THE NUCLIDES     -
CN          THAT ARE ASSIGNED TO EACH ZONE, OUT OF THE HNR AND HNF LIST -
CN          ABOVE, ARE INVOLVED. THIS OPTION COULD BE USED TO INITIALIZE-
CN          THE CONTENTS OF THE ROD ZONES AT SOME POINT IN THE HISTORY. -
CN          ROD-FOLLOWER EXPOSURE CANNOT BE FOLLOWED.                  -
CN          IF NZI=0 FOR SOME SET J, NO CHANGES WILL BE MADE IN THAT   -
CN          SET OF ROD ZONES.                                          -
CN          THIS OPTION WILL BE IGNORED FOR A 'CLOSED-LOOP' SET.       -
CN                   IF NOP .EQ. 1                                     -
C                                                                      -
```

(CONT)

```
CN          NZI IS THE NUMBER OF ZONE MATERIAL INTERCHANGES REQUIRED    -
CN          FOR SET J AT POINT L IN THE HISTORY TO EFFECT THE DESIRED   -
CN          ROD WITHDRAWAL (OR INSERTION IF NZI .LT. 0). ROD AND        -
CN          FOLLOWER NUCLIDE CONCENTRATIONS (IN THE LIST OF ZONES ABOVE)-
CN          WILL BE INTERCHANGED IN A PUSH-DOWN SENSE NZI TIMES. FOR    -
CN          EXAMPLE FOR A NON 'CLOSED-LOOP' SET, IF THE NRZ ZONE        -
CN          NUMBERS FOR SET J WERE                                      -
CN               3(M3)  6(M6)  2(M2)  7(M7)  5(M5)                      -
CN          WHERE THE MX'S REPRESENT THE ROD AND/OR FOLLOWER NUCLIDE    -
CN          CONCENTRATIONS IN THE ZONES AT POINT L IN THE HISTORY, THEN -
CN          IF NZI = +2 (ROD WITHDRAWAL) TWO SUCCESSIVE INTERCHANGES    -
CN          WOULD BE MADE AND THE FINAL CONTENTS OF THE ZONES WOULD BE  -
CN               3(M2)  6(M7)  2(M5)  7(FN)  5(FN)                      -
CN          WHERE FN REPRESENTS THE CONCENTRATIONS INSERTED IN MAKE-UP  -
CN          ZONE 5 (SEE OPTION MRW ABOVE). IF NZI HAD BEEN -1 (ROD      -
CN          INSERTION), THEN THE CONTENTS OF THE ZONES WOULD BE         -
CN               3(RN)  6(M3)  2(M6)  7(M2)  5(M7)                      -
CN          WHERE RN REPRESENTS THE CONCENTRATIONS INSERTED IN MAKE-UP  -
CN          ZONE 3 (SEE OPTION MRI ABOVE).                              -
CN          THIS NOP=1 OPTION MUST BE USED IF THE ROD-FOLLOWER EXPOSURE -
CN          IS TO BE FOLLOWED.                                          -
C                                                                       -
CN          IF A SET OF ZONES IS A 'CLOSED-LOOP' SET, IE., THE LAST     -
CN          ZONE NUMBER EQUAL TO THE FIRST ZONE NUMBER, THEN MATERIAL   -
CN          IN THE SECOND (OR NEXT TO LAST IF NZI.LT.0) ZONE IS SAVED - -
CN          THEN AFTER ALL INTERCHANGES HAVE BEEN MADE, THIS MATERIAL   -
CN          REPLACES THAT IN THE LAST (OR FIRST) ZONE IN THE LIST. FOR  -
CN          THE 'CLOSED-LOOP' SET, ALL NUCLIDES IN THE ZONES ARE        -
CN          INTERCHANGED, NOT JUST THOSE SPECIFIED BY HNR AND HNF.      -
CN          ALL ZONES IN A 'CLOSED-LOOP' SET MUST HAVE THE SAME NUCLIDES-
CN          IN THE SAME ORDER. NORMALLY ONLY ONE INTERCHANGE WOULD BE   -
CN          SPECIFIED. FOR EXAMPLE IF THE 'CLOSED-LOOP' SET WERE        -
CN               3(M3)  6(M6)  2(M2)  7(M7)  3(M3)                      -
CN          THEN AFTER ONE INTERCHANGE (NZI=+1) THE ZONES WOULD CONTAIN -
CN                      6(M2)  2(M7)  7(M3)  3(M6)                      -
CN          FOR NZI=-1, THE ZONES WOULD CONTAIN                         -
CN               3(M7)  6(M3)  2(M6)  7(M2)                             -
C                                                                       -
CN          TO CARRY OUT A CORRECT ROD POSITIONING SCHEDULE WITH THE    -
CN          AUTOMATED PROCEDURE, THE REPOSITIONING MUST INCLUDE EACH    -
CN          OF THE STEPS (POINTS IN THE HISTORY) IN THIS SET OF         -
CN          SPECIFICATIONS IF THEY ARE UNIQUE. (COMPLICATED             -
CN          SPECIFICATIONS CAN BE USED WHICH REQUIRE SELECTED           -
CN          APPLICATIONS, ONE OR MORE, TO CAUSE A PROPER SCHEDULE OF    -
CN          CONTROL ROD REMOVAL).                                       -
CN          THE OPTION NOP=0 IS GENERALLY MORE FLEXIBLE REGARDING THE   -
CN          POINTS IN THE HISTOTY WHICH CAN BE USED FOR THE EXPOSURE    -
CN          THAN NOP=1, I.E., POINTS IN THE HISTORY MAY BE SKIPPED AND  -
CN          PROPER POSITIONING STILL BE ACCOMPLISHED.                   -
C                                                                       -
```

(CONT)

```
CN          FOR BOTH THE ABOVE OPTIONS FOR NON 'CLOSED-LOOP' SETS, ONLY -
CN          THOSE NUCLIDES HNR AND HNF THAT ARE ASSIGNED TO THE ZONES   -
CN          ARE INVOLVED. GENERALLY THE SAME ROD AND/OR FOLLOWER        -
CN          NUCLIDES MUST BE ASSIGNED TO ALL ZONES OF A SET J (NRZ      -
CN          ABOVE), BUT NOT NECESSARLY IN THE SAME ORDER. CONSISTANT    -
CN          NUCLIDE-ZONE-CROSS SECTION REFERENCING IS ESSENTIAL.        -
C                                                                       -
C                                                                       -
CN                   IF NOP .EQ. 2                                      -
C                                                                       -
CN          NZI IS PARTS PER 1000, EQUAL TO THE FRACTION OF ROD         -
CN          INSERTION WHEN THE ROD ZONES ARE NOT REPRESENTED            -
CN          EXPLICITLY, IE., FOR TWO-DIMENSIONAL CALCULATIONS.          -
CN          LET X = NZI(J,L)/1000. THEN FIRST, ALL ROD AND FOLLOWER     -
CN          CONCENTRATIONS ARE ZEROED IN THE ZONES NRZ IN SET J AT THIS -
CN          POINT IN THE HISTORY. THEN THE ROD CONCENTRATIONS ARE       -
CN          INSERTED AS N = X*ADR, THEN THE FOLLOWER CONCENTRATIONS     -
CN          ARE ADDED, N = N+(1-X)*ADF.                                 -
CN          *****NOTE THAT IF THE FULL ROD INSERTION (WITHDRAWAL) DATA  -
CN          IS PRESENT (NSE .GT. 0)), THEN THE DATA NZR, ARD, AFD IS    -
CN          USED INSTEAD OF THE DATA NRZ, ADR, ADF. THE FULL ROD        -
CN          INSERTION OPTION NOE DOES NOT APPLY. IN THIS CASE ONLY THE  -
CN          NZI(J=1,L) DATA IS USED TO APPLY TO THE 1 SET OF ZONES NZR. -
CN          FOR ANY SET J FOR WHICH NZI.LT.0, NO CHANGES IN THE ZONES   -
CN          IN THAT SET WILL BE MADE.                                   -
C                                                                       -
C-----------------------------------------------------------------------
```

```
C-----------------------------------------------------------------------
CR          SPECIAL FULL ROD INSERTION (WITHDRAWAL) DATA  (6D RECORD)   -
C                                                                       -
CC          PRESENT IF NSE.GT.0                                         -
C                                                                       -
CL     (NZR(I),I=1,NSE)                                                 -
C                                                                       -
CW     (NSE) = NUMBER OF WORDS.                                         -
C                                                                       -
CD    NZR            NUMBER OF ROD ZONE.                                -
C                                                                       -
C-----------------------------------------------------------------------
```

(CONT)

```
C-----------------------------------------------------------------------
CR          SPECIAL FULL ROD INSERTION (WITHDRAWAL) DATA  (7D RECORDS)  -
C                                                                       -
CC          PRESENT IF NSE.GT.0                                         -
C                                                                       -
C                                                                       -
CL    (ARD(J),J=1,NCRN),(AFD(K),K=1,NFRN)----SEE STRUCTURE BELOW----    -
C                                                                       -
CS    DO 1 M = 1,NSE                                                    -
CS  1 READ(N)  *LIST AS ABOVE*                                          -
C                                                                       -
CW    (NCRN+NFRN) = NUMBER OF WORDS.                                    -
C                                                                       -
CD    ARD           ATOM DENSITY OF ROD NUCLIDE.                        -
C                                                                       -
CD    AFD           ATOM DENSITY OF FOLLOWER NUCLIDE.                   -
C                                                                       -
C-----------------------------------------------------------------------
```

```
C-----------------------------------------------------------------------
CR          SPECIAL SHUT-DOWN ROD DATA  (8D RECORD)                     -
C                                                                       -
CC          PRESENT IF NSH.GT.0                                         -
C                                                                       -
CL    (MSH(I),I=1,NSH)                                                  -
C                                                                       -
CW    (NSH) = NUMBER OF WORDS.                                          -
C                                                                       -
CD    MSH           NUMBER OF ROD ZONE.                                 -
C                                                                       -
C-----------------------------------------------------------------------
```

```
C-----------------------------------------------------------------------
CR          SPECIAL SHUT-DOWN ROD DATA  (9D RECORDS)                    -
C                                                                       -
CC          PRESENT IF NSH.GT.0                                         -
C                                                                       -
C                                                                       -
CL    (SHR(J),J=1,NCRN)----SEE STRUCTURE BELOW----                      -
C                                                                       -
CS    DO 1 M = 1,NSH                                                    -
CS  1 READ(N)  *LIST AS ABOVE*                                          -
C                                                                       -
CW    (NCRN) = NUMBER OF WORDS.                                         -
C                                                                       -
CD    SHR           ATOM DENSITY OF ROD NUCLIDE.                        -
C                                                                       -
C                                                                       -
C-----------------------------------------------------------------------
```

(CONT)

```
C-----------------------------------------------------------------------
CR          INTEGER SAVE DATA  (10D RECORD)                            -
C                                                                      -
CC          PRESENT IF ISV.GT.0                                        -
C                                                                      -
CL    (IR(I),I=1,100)                                                  -
C                                                                      -
CW    (100) = NUMBER OF WORDS.                                         -
C                                                                      -
CD    IR            INTEGER SAVE DATA - INITIALIZE ZERO.               -
C                                                                      -
CD    IR(1)         COUNT OF C.R.P. ACCESSES.                          -
CD    IR(2)         CYCLE NUMBER OF LAST C.R.P. ACCESS.                -
CD    IR(3)         C.R.P. OPTION (IX(10)-'RODINS') OF LAST ACCESS.    -
CD    IR(4)         MEMORY REQUIRED FOR LAST C.R.P. ACCESS.            -
CD    IR(5)         POINT IN HISTORY OF LAST ACCESS.                   -
C                                                                      -
C-----------------------------------------------------------------------
```

```
C-----------------------------------------------------------------------
CR          REAL SAVE DATA  (11D RECORD)                               -
C                                                                      -
CC          PRESENT IF ISV.GT.0                                        -
C                                                                      -
CL    (XR(I),I=1,100)                                                  -
C                                                                      -
CW    (100) = NUMBER OF WORDS.                                         -
C                                                                      -
CD    XR            REAL SAVE DATA - INITIALIZE ZERO.                  -
C                                                                      -
CD    XR(1)         TOTAL CYCLE TIME (XX(1)-'RODINS') OF LAST ACCESS.  -
CD    XR(2)         TIME INTO CYCLE (TIME-'ZNATDN') OF LAST ACCESS.    -
CD    XR(3)         FRACTION TIME INTO CYCLE OF LAST ACCESS.           -
C                                                                      -
CN          INFORMATION IS PLACED IN THESE TWO RECORDS BY THE CODE     -
CN          WHICH IS NEEDED FOR AUTOMATION OF ROD POSITIONING AND      -
CN          VERIFICATION TESTING. DATA NOT SPECIFIED HERE IS RESERVED  -
CN          FOR CODE INTERNAL USE AND SHOULD NOT BE SUPPLIED BY THE    -
CN          USER, BUT MAY BE RECOVERED FROM A FILE WRITTEN IN A        -
CN          PREVIOUS RUN TO CONTINUE A CALCULATION. THE USER SHOULD NOT -
CN          SPECIFY THIS DATA AS A NORMAL INPUT.                       -
C                                                                      -
C-----------------------------------------------------------------------
```

```
C***********************************************************************-
C                                                                      -
CEOF        RODSET                                                     -
C                                                                      -
C***********************************************************************-
```

SPECIFICATIONS FOR INTERFACE FILE RSTRTR

```
C*********************************************************************-
C                        REVISED 04/01/80                             -
C                                                                     -
CF          RSTRTR                                                    -
C                                                                     -
CE          CODE-BLOCK-DEPENDENT RESTART DATA SAVED FOR RECOVERY      -
C                                                                     -
C*********************************************************************-

C---------------------------------------------------------------------
CR          FILE IDENTIFICATION                                       -
C                                                                     -
CL    HNAME,(HUSE(I),I=1,2),IVERS                                     -
C                                                                     -
CW    3*MULT + 1                                                      -
C                                                                     -
CD    HNAME              HOLLERITH FILE NAME - RSTRTR - (A6)          -
CD    HUSE(I)            HOLLERITH USER IDENTIFICATION(2A6)           -
CD    IVERS              FILE VERSION NUMBER                          -
CD                         VERSION 1 RESERVED FOR VENTURE             -
C                                                                     -
CN    MULT           1 FOR LONG WORD, 2 FOR SHORT WORD MACHINES       -
C                                                                     -
C---------------------------------------------------------------------


C---------------------------------------------------------------------
CR          FILE REFERENCE INFORMATION                                -
C                                                                     -
CL    NFI1,NFI2,NFI3,N1,N2,N3,N4,N5,NR1,NR2,L2                        -
C                                                                     -
CW    11                                                              -
C                                                                     -
CD    NFI1 - NFI3        FILE IDENTIFICATION FLAGS                    -
CD    N1 - N5            RESERVED                                     -
CD    NR1                NUMBER OF RECORDS OF TYPE 1 DATA             -
CD    NR2                NUMBER OF RECORDS OF TYPE 2 DATA             -
CD    L2                 LENGTH OF ALL RECORDS OF TYPE 2 DATA         -
C                                                                     -
C---------------------------------------------------------------------


C---------------------------------------------------------------------
CR          RECORD LENGTHS OF TYPE 1 DATA                             -
C                                                                     -
CL    (NWIR(J),J=1,NR1)                                               -
C                                                                     -
CW    NR1                                                             -
C                                                                     -
CD    NWIR(J)            NUMBER OF WORDS IN TYPE 1 DATA RECORD RECORD J -
C                                                                     -
C---------------------------------------------------------------------
```

(CONT)

```
C-----------------------------------------------------------------------
CR          RESTART DATA RECORDS, TYPE 1                              -
C                                                                     -
CL     (DARS(I),I=1,M)                                                -
C                                                                     -
CW     M, WHICH IS NWIR(J) FOR RECORD SEQUENCE J , NR1 RECORDS        -
C                                                                     -
CD     DARS(I)            CODE DEPENDENT RECOVERY DATA ARRAY TYPE 1   -
C                                                                     -
C-----------------------------------------------------------------------

C-----------------------------------------------------------------------
CR          RESTART DATA RECORDS, TYPE 2                              -
C                                                                     -
CL     (DARR(I),I=1,L2)                                               -
C                                                                     -
CW          L2, NR2 RECORDS                                           -
C                                                                     -
CD     DARR(I)            CODE DEPENDENT RECOVERY DATA ARRAY TYPE 2   -
C                                                                     -
C-----------------------------------------------------------------------

C***********************************************************************-
C                                                                     -
CEOF        RSTRTR                                                    -
C                                                                     -
C***********************************************************************-
```

SPECIFICATIONS FOR INTERFACE FILE TRIGOM

```
C*********************************************************************-
C                        REVISED 04/01/80                             -
C                                                                     -
CF          TRIGOM                                                    -
C                                                                     -
CE          TRIANGULAR GEOMETRY DESCRIPTION                           -
C                                                                     -
C*********************************************************************-

C---------------------------------------------------------------------
CR          FILE IDENTIFICATION (NV)                                  -
C                                                                     -
CL    HNAME,(HUSE(I),I=1,2),IVERS                                     -
C                                                                     -
CW    1+3*MULT                                                        -
C                                                                     -
CD    HNAME          HOLLERITH FILE NAME - TRIGOM - (A6)              -
CD    HUSE           HOLLERITH USER IDENTIFICATION (A6)               -
CD    IVERS          FILE VERSION NUMBER                              -
C                                                                     -
CN    MULT           1 FOR LONG WORD, 2 FOR SHORT WORD MACHINES       -
C                                                                     -
C---------------------------------------------------------------------


C---------------------------------------------------------------------
CR          FILE REFERENCE INFORMATION  (1D RECORD)                   -
C                                                                     -
CL    IGOM,NZONE,NREG,NZCL,NCINTI,NCINTJ,NCINTK,NINTI,NINTJ,NINTK,IMB1, -
CL    IMB2,JMB1,JMB2,KMB1,KMB2,NBS,NBCS,NIBCS,NZWBB,NTRIAG,NRASS,     -
CL    (NGOP(I),I=1,5)                                                 -
C                                                                     -
CW    27                                                              -
C                                                                     -
CD    IGOM           GEOMETRY 5- SPECIAL TRIAGONAL, TWO-DIMENSIONAL   -
CD                          19- SPECIAL TRIAGONAL-Z, THREE-DIMENSIONAL -
CD    NZONE          NUMBER OF ZONES (EACH HOMOGENEOUS IN NEUTRONICS  -
CD                   PROBLEM)                                         -
CD    NREG           NOT DEFINED                                      -
CD    NZCL           NUMBER OF ZONE CLASSIFICATIONS (EDIT PURPOSES)   -
CD    NCINTI         NOT DEFINED                                      -
CD    NCINTJ         NOT DEFINED                                      -
CD    NCINTK         NUMBER OF THIRD DIMENSION COARSE MESH INTERVALS  -
CD                            NCINTK.EQ.1 FOR ONE AND TWO             -
CD                            DIMENSIONAL CASES.                      -
CD                     A COARSE MESH INTERVAL IS DEFINED AS ONE       -
CD                     CONTAINING ONE OR MORE FINE MESH INTERVALS, EACH -
CD                     OF WHICH CONTAINS THE SAME MATERIAL ZONE.      -
CD    NINTI          THE NUMBER OF POINTS ON A PLANE. POINTS ARE AT   -
CD                     THE INTERSECTIONS OF MESH LINES.               -
CD    NINTJ          NOT DEFINED                                      -
CD    NINTK          NUMBER OF THIRD DIMENSION FINE MESH INTERVALS    -
CD                       NINTK.EQ.1 FOR ONE AND TWO DIMENSIONAL       -
CD                       CASES.                                       -
```

(CONT)

```
CD    IMB1          FIRST BOUNDARY ON FIRST DIMENSION                    -
CD                          0- ZERO FLUX (DIFFUSION)                   -
CD                          1- REFLECTED                               -
CD                          2- EXTRAPOLATED (DIFFUSION - DEL PHI       -
CD                             /PHI =-C/D WHERE C IS GIVEN AS BNDC     -
CD                             BELOW AND D IS THE GROUP DIFFUSION      -
CD                             CONSTANT, TRANSPORT - NO RETURN)        -
CD                          3- NOT DEFINED                             -
CD                          4- REPEATING (PERIODIC) WITH NEXT          -
CD                             ADJACENT FACE 60 OR 120 DEGREE          -
CD                             ROTATION).                              -
CD                             THE LEFT AND TOP BOUNDARIES ARE         -
CD                             REPEATING.                              -
CD                          5- NOT DEFINED                             -
CD                          6- NOT DEFINED                             -
C                                                                      -
CN          NOTE THAT FOR REPEATING BOUNDARIES, THE FIRST BOUNDARY IN  -
CN          ORDER WHICH IS INVOLVED CARRIES THE DESIGNATOR DEFINING    -
CN          THE REPEATING CONDITION.                                   -
C                                                                      -
CD    IMB2          LAST BOUNDARY ON FIRST DIMENSION                     -
CD    JMB1          FIRST BOUNDARY ON SECOND DIMENSION                   -
CD                          5- REPEATING ALONG THIS BOUNDARY - 180     -
CD                             DEGREES. IF NPF EQUALS THE NUMBER OF    -
CD                             POINTS ON THIS BOUNDARY, THEN THE FLUXE -
CD                             AT POINTS NPF/2 THROUGH NPF ARE EQUAL   -
CD                             TO THE FLUXES AT POINTS 1 THROUGH NPF/2 -
CD                             FOR THIS OPTION, IMB1=IMB2 AND          -
CD                             NTRIAG=1.                               -
CD    JMB2          LAST BOUNDARY ON SECOND DIMENSION                    -
CD    KMB1          FIRST BOUNDARY ON THIRD DIMENSION                    -
CD    KMB2          LAST BOUNDARY ON THIRD DIMENSION                     -
CD    NBS           NUMBER OF BUCKLING SPECIFICATIONS                    -
CD                      1- SINGLE VALUE APPLIES EVERYWHERE               -
CD                      .EQ.NZONE, ZONE-DEPENDENT                        -
CD                      N*NZONE, DATA IS GIVEN OVER ALL ZONES FOR        -
CD                        THE FIRST ENERGY GROUP, THEN FOR THE NEXT      -
CD                        GROUP, TO END OF LIST - IF THERE ARE MORE      -
CD                        GROUPS, LAST GROUP DATA GIVEN IS USED          -
CD    NBCS          NUMBER OF CONSTANTS FOR EXTERNAL BOUNDARIES          -
CD                      1- SINGLE VALUE USED EVERYWHERE                  -
CD                      6- INDIVIDUAL VALUES FOR EACH POSSIBLE           -
CD                        SURFACE (BOUNDARY SPECS GIVE ACTUAL USE)       -
CD                        N*6- SIX VALUES ARE GIVEN FOR THE FIRST        -
CD                        ENERGY GROUP, THEN SIX FOR THE NEXT, TO        -
CD                        THE END OF THE LIST - THE LAST GROUP DATA      -
CD                        GIVEN APPLIES TO ALL ADDITIONAL GROUPS         -
CD    NIBCS         NUMBER OF CONSTANTS FOR INTERNAL BOUNDARIES          -
CD                      1- SINGLE VALUES USED EVERYWHERE                 -
CD                        .GT.1- VALUES ARE GIVEN BY ENERGY GROUP        -
CD                        WITH NON-BLACK CONDITION INDICATED BY          -
CD                        ZERO ENTRY - LAST VALUE APPLIES TO             -
CD                        ADDITIONAL GROUPS                              -
```

(CONT)

```
                                (CONT)
CD     NZWBB          BLACK ABSORBER ZONE INDICATOR.                          -
CD                        0- NO BLACK ZONES.                                  -
CD                        1- ONE BLACK ABSORBER ZONE.                         -
CD     NTRIAG         MESH ORINTATION                                         -
CD                        0- RHOMBUS WITH 120 DEGREES AT UPPER LEFT           -
CD                           CORNER (NPL.EQ.NPF BELOW).                       -
CD                        1- TRAPEZOID (OR TRIANGLE) WITH 60 DEGREES AT       -
CD                           UPPER LEFT AND UPPER RIGHT CORNERS               -
CD                           (NPL.LT.NPF).                                    -
CD                        2- TRIANGLE WITH 30 DEGREES AT UPPER LEFT           -
CD                           CORNER AND 60 DEGREES AT UPPER RIGHT             -
CD                           CORNER (NPL.LT.NPF). IMB1 AND JMB2 MUST BE 1 -
CD                           AND NPF .GE. 3.                                  -
CD     NRASS          ZONE ASSIGNMENTS.                                       -
CD                        0- TO COARSE MESH                                   -
CD                        1- TO FINE MESH                                     -
CD     NGOP           NOT DEFINED.                                            -
C                                                                              -
C-----------------------------------------------------------------------------

C-----------------------------------------------------------------------------
CR           GEOMETRY DATA (2D RECORD)                                         -
C                                                                              -
CL     (BSQ(N),N=1,NBS),(BNDC(N),N=1,NBCS),(BNCI(N),N=1,NIBCS),                -
CL     (NZHBB(N),N=1,NZWBB),(NZC(N),N=1,NZONE)                                 -
C                                                                              -
CW     NBS+NBCS+NIBCS+NZWBB+NZONE                                              -
C                                                                              -
CD     BSQ            BUCKLING (B**2) VALUES (CM**-2)                         -
CD     BNDC           BOUNDARY CONSTANTS (DEL PHI/PHI =-C/D)                  -
CD     BNCI           INTERNAL BLACK BOUNDARY CONSTANTS                       -
CD     NZHBB          ZONE NUMBER WITH BLACK ABSORBER CONDITIONS              -
CD     NZC            ZONE CLASSIFICATIONS                                    -
C                                                                              -
C-----------------------------------------------------------------------------

C-----------------------------------------------------------------------------
CR           REFERENCE MESHPOINT DATA (3D RECORD)                              -
C                                                                              -
CL     MPO,NPF,NPL,NRP,MNP,NRS,NOS,NO3,MZA,MB,MC,(KFINTS(L),L=1,NCINTK)        -
C                                                                              -
CW     NCINTK + 11                                                             -
C                                                                              -
CD     MPO            MESHPOINT LOCATION OPTION                               -
CD                     0- UNIFORM, EQUILATERAL MESH ARRANGEMENT                -
CD                        (SIMPLE GEOMETRY DESCRIBED BY DATA IN THIS           -
CD                         RECORD, MNP=6)                                      -
CD                     1- PARALLEL ROWS OF MESH POINTS                         -
CD                     2- GENERAL ARRANGEMENT                                  -
CD     NPF            NUMBER OF POINTS ALONG FIRST (TOP) ROW                  -
CD                     -- USED IF MPO = 0                                      -
```

(CONT)

```
CD     NPL            NUMBER OF POINTS ALONG LAST (BOTTOM) ROW              -
CD                     -- USED IF MPO = 0. NPL MUST BE .EQ. OR .LT. NPF.   -
CD                     FOR NPL.EQ.NPF, 120 DEGREES IS IN UPPER LEFT        -
CD                     CORNER. IF NPL.LT.NPF, THE UPPER LEFT CORNER        -
CD                     IS 30 OR 60 DEGREES (SEE NTRIAG ABOVE).             -
CD     NRP            NUMBER OF ROWS OF POINTS                              -
CD                     -- USED IF MPO .LT. 2                               -
CD     MNP            REFERENCE OR MAXIMUM NUMBER OF NEIGHBOR POINTS ON A -
CD                     PLANE                                               -
CD     NRS            NUMBER OF ZONE ASSIGNMENTS ON EACH PLANE              -
CD     NOS            NOT DEFINED                                           -
CD     NO3            NOT DEFINED                                           -
CD     MZA            NOT DEFINED                                           -
CD     MB             NOT DEFINED                                           -
CD     MC             NOT DEFINED                                           -
CD     KFINTS         NUMBER OF FINE MESH INTERVALS PER COARSE MESH         -
CD                        INTERVAL, THIRD DIMENSION                        -
C                                                                            -
CN           MESHPOINTS HERE MAY BE INTERPRETED AS TRIANGLE CORNERS         -
C                                                                            -
C-----------------------------------------------------------------------------


C-----------------------------------------------------------------------------
CR           REFERENCE DATA (4D RECORD)                                     -
C                                                                            -
CL     PMESH,QMESH,X1,X2,X3,(ZMESH(K),K=1,NCBNDK)                            -
C                                                                            -
CW     MULT*(NCINTK+6)                                                       -
C                                                                            -
CD     PMESH          LENGTH OF TRIANGLE LEG (MESHPOINT SPACING) IF FIXED -
CD                     -- USED IF MPO = 0                                  -
CD     QMESH          NOT DEFINED                                           -
CD     X1             NOT DEFINED                                           -
CD     X2             NOT DEFINED                                           -
CD     X3             NOT DEFINED                                           -
CD     ZMESH          COARSE MESH BOUNDARIES, THIRD DIMENSION               -
CD     NCBNDK         NCINTK+1, NUMBER OF THIRD DIMENSION COARSE MESH       -
CD                        BOUNDARIES                                       -
C                                                                            -
CN           NOTE THAT FOR TWO-DIMENSIONAL PROBLEMS, NCINTK=1, NCBNDK=2, -
CN           ALTHOUGH DATA FOR THE THIRD DIMENSION ARE NOT USED (IGOM=5) -
C                                                                            -
C-----------------------------------------------------------------------------


C-----------------------------------------------------------------------------
CR           MESHPOINT ARRANGEMENTS (5D RECORD)                             -
C                                                                            -
CC           PRESENT IF MPO.EQ.1                                            -
C                                                                            -
CL     (XMESH(I),I=1,NINTI),(YROW(J),J=1,NRP),(NMPR(J),J=1,NRP)              -
C                                                                            -
CW     MULT*(NINTI + NRP) + NRP                                              -
```

(CONT)

```
C                                                                       -
CD    XMESH          LOCATION OF EACH MESHPOINT ON A PLANE MEASURED FROM -
CD                    REFERENCE ALONG X COORDINATE, CM                  -
CD    YROW           ROW LOCATION MEASURED FROM REFERENCE ALONG Y       -
CD                    COORDINATE (NORMAL TO X), CM                      -
CD    NMPR           NUMBER OF MESH POINTS ON THE ROW                   -
C                                                                       -
C-----------------------------------------------------------------------


C-----------------------------------------------------------------------
CR          MESHPOINT ARRANGEMENTS (6D RECORD)                          -
C                                                                       -
CC          PRESENT IF MPO.EQ.2                                         -
C                                                                       -
CL    ((XYMESH(I,J),I=1,2),J=1,NINTI)                                   -
C                                                                       -
CW    2*MULT*NINTI                                                      -
C                                                                       -
CD    XYMESH(1,J)    LOCATION OF MESHPOINT MEASURED ALONG X COORDINATE  -
CD                    FROM REFERENCE (INCREASING ORDER FOR ANY Y), CM   -
CD    XYMESH(2,J)    LOCATION OF MESHPOINT MEASURED ALONG Y COORDINATE  -
CD                    FROM REFERENCE, Y NORMAL TO X, (INCREASING), CM   -
C                                                                       -
C-----------------------------------------------------------------------

            THERE ARE NCINTK RECORDS WHICH FOLLOW IF NRASS IS 0
                      NINTK RECORDS WHICH FOLLOW IF NRASS IS 1
               BUT ONLY ONE SET IF IGOM IS 5

C-----------------------------------------------------------------------
CR          TRIANGLE ZONE ASSIGNMENTS (7D RECORD)                       -
C                                                                       -
CC          ALWAYS PRESENT                                              -
C                                                                       -
CL    (MR(I),I=1,NRS)                                                   -
C                                                                       -
CW    NRS                                                               -
C                                                                       -
CD    MR             ZONE NUMBER ASSIGNMENT TO MESH INTERVAL            -
C                                                                       -
CN          CONSIDER THAT NEAR-NEIGHBOR POINTS HAVE A LINE OF COUPLING. -
CN          COUPLING LINES FORM TRIANGLES. THE TRIANGLES LYING          -
CN          WHOLLY BELOW A LOCAL HORIZONTAL LINE ARE ASSIGNED ZONE      -
CN          NUMBERS THROUGH THE MESH STARTING WITH THE FIRST (TOP)      -
CN          HORIZONTAL ROW, INCREASING X GIVEN Y, THEN INCREASING Y     -
C                                                                       -
C-----------------------------------------------------------------------

C***********************************************************************-
C                                                                       -
CEOF        TRIGOM                                                      -
C                                                                       -
C***********************************************************************-
```

SPECIFICATIONS FOR INTERFACE FILE MASBAL

```
C*********************************************************************
CN                        DATE 07-28-80                              -
C                                                                    -
CF                        MASBAL                                     -
C                                                                    -
CE                 MASS BALANCE INFORMATION                          -
C                                                                    -
C*********************************************************************

C---------------------------------------------------------------------
CR                 FILE IDENTIFICATION                               -
C                                                                    -
CL       HNAME,(HUSE(I),I=1,2),IVERS                                 -
C                                                                    -
CW                 3*MULT + 1 = NUMBER OF WORDS                      -
C                                                                    -
CD       HNAME             FILE NAME (A6) ='MASBAL'                  -
CD       HUSE              USER IDENTIFICATION (2A6)                 -
CD       IVERS             FILE VERSION NUMBER                       -
C                                                                    -
CN       MULT              1 FOR LONG WORD, 2 FOR SHORT WORD MACHINES -
C                                                                    -
C---------------------------------------------------------------------

C---------------------------------------------------------------------
CS                         FILE STRUCTURE                            -
CS                                                                   -
CS       RECORD TYPE                                PRESENT IF       -
CS       ===========                                ===========      -
CS       FILE IDENTIFICATION                        ALWAYS           -
CS       FILE CONTROL                               ALWAYS           -
CS       NUCLIDE IDENTIFICATION AND BASE DATA       ALWAYS           -
CS       DISCHARGE BLOCK MATERIAL                   MNFD*(NFDB+NFDDB).GT.0 -
CS       SUPPLY BLOCK MATERIAL                      MNFS*NFSB.GT.0   -
CS       INITIAL REACTOR INVENTORY                  ALWAYS           -
CS                                                                   -
CS   ********(REPEAT TO MAXCY)                                       -
CS   *   FUELING INFORMATION                        ALWAYS           -
CS   *   INITIAL LOADING MASS BALANCE DATA          ALWAYS           -
CS   *   DISCHARGE MATERIAL MASS BALANCE DATA       MNFD*NFDB.GT.0   -
CS   *   FIXED FEED MASS BALANCE DATA               MNFF*NFFB.GT.0   -
CS   *   SUPPLY MATERIAL MASS BALANCE DATA          MNFS*NFSB.GT.0   -
CS   *   FINAL LOADING MASS BALANCE DATA            ALWAYS           -
CS   ********                                                        -
C---------------------------------------------------------------------

C---------------------------------------------------------------------
CR                 FILE CONTROL (1D RECORD)                          -
C                                                                    -
CL       NNR,NNO,MAXCY,NFDB,MNFD,NFDDB,NFSB,MNFS,NFFB,MNFF,          -
CL       (KI(I),I=1,10)                                              -
C                                                                    -
CW                 20 = NUMBER OF WORDS                              -
```

(CONT)

```
C                                                                       -
CN              UNDEFINED DATA IS RESERVED FOR FUTURE USE               -
C                                                                       -
CD      NNR             NUMBER OF NUCLIDES FOR WHICH MASS ACCOUNTING IS -
CD                      MAINTAINED                                      -
CD      NNO             NUCLIDE NAME REFERENCE OPTION:                  -
CD                       0 - BY ABSOLUTE NAME(HANAME)                   -
CD                       1 - BY UNIQUE NAME(HNNAME)                     -
CD      MAXCY           NUMBER OF SETS OF FUELING MASS BALANCE DATA     -
CD                      WRITTEN                                         -
CD      NFDB            NUMBER OF FUEL DISCHARGE BLOCKS                 -
CD      MNFD            MAXIMUM NUMBER OF NUCLIDES IN ANY FUEL          -
CD                      DISCHARGE BLOCK                                 -
CD      NFDDB           NUMBER OF FUEL DELAYED DISCHARGE BLOCKS         -
CD      NFSB            NUMBER OF FUEL SUPPLY BLOCKS                    -
CD      MNFS            MAXIMUM NUMBER OF NUCLIDES IN ANY FUEL SUPPLY   -
CD                      BLOCK                                           -
CD      NFFB            NUMBER OF FIXED FEED FUEL BLOCKS                -
CD      MNFF            MAXIMUM NUMBER OF NUCLIDES IN ANY FIXED         -
CD                      FEED FUEL BLOCK                                 -
C                                                                       -
C-----------------------------------------------------------------------


C-----------------------------------------------------------------------
CR              NUCLIDE IDENTIFICATION AND BASE DATA (2D RECORD)        -
C                                                                       -
CL      (HFM(I),I=1,NNR),                                               -
CL      ((NDN(K,M),K=1,MNFD),M=1,NFDB),                                 -
CL      ((NSPN(K,M),K=1,MNFS),M=1,NFSB),                                -
CL      ((NFN(K,M),K=1,MNFF),M=1,NFFB)                                  -
C                                                                       -
CW      MULT*NNR + MNFD*NFDB + MNFS*NFSB + MNFF*NFFB = NUMBER OF WORDS  -
C                                                                       -
CD      HFM             NUCLIDE REFERENCE NAME FOR WHICH MASS           -
CD                      ACCOUNTING IS MAINTAINED. (A6)                  -
CD      NDN             REFERENCE NUCLIDES FOR DISCHARGE BLOCK M (ORDER -
CD                      NUMBER IN HFM LIST)                             -
CD      NSPN            REFERENCE NUCLIDES FOR SUPPLY BLOCK M (ORDER    -
CD                      NUMBER IN HFM LIST)                             -
CD      NFN             REFERENCE NUCLIDES FOR FIXED FEED BLOCK M       -
CD                      (ORDER NUMBER IN HFM LIST)                      -
C                                                                       -
C-----------------------------------------------------------------------


C-----------------------------------------------------------------------
CR              DISCHARGE BLOCK MATERIAL (3D RECORD)                    -
C                                                                       -
CC      PRESENT IF MNFD*(NFDB + NFDDB).GT.0                             -
C                                                                       -
CL      ((DBMASS(I,J),I=1,MNFD),J=1,NFDB),                              -
CL      (NDDB(J),J=1,NFDDB),(NCYDDB(J),J=1,NFDDB),                      -
CL      (NFDLAY(J),J=1,NFDDB),((DDBMSS(I,J),I=1,MNFD),J=1,NFDDB)        -
C                                                                       -
CW              NFDB*MNFD + NFDDB*(3 + MNFD) = NUMBER OF WORDS          -
```

(CONT)

```
C                                                                       -
CD      DBMASS          MASS OF NUCLIDE I IN DISCHARGE BLOCK J          -
CD      NDDB            DISCHARGE BLOCK TO RECIEVE MATERIAL FROM        -
CD                      DELAYED BLOCK J WHEN THE BLOCK BECOMES          -
CD                      ACTIVE (0 ENTRY IMPLIES SLOT J IS AVAILABLE     -
CD                      FOR DELAYED DISCHARGE).                         -
CD      NCYDDB          FUELING CYCLE REFERENCE NUMBER WHEN DELAYED     -
CD                      DISCHARGE IS CREATED                            -
CD      NFDLAY          FUELING DELAY IN CYCLES ASSOCIATED WITH DELAYED -
CD                      DISCHARGE BLOCK J                               -
CD      DDBMSS          MASS OF NUCLIDE I IN DELAYED DISCHARGE BLOCK J  -
C                                                                       -
C-----------------------------------------------------------------------

C-----------------------------------------------------------------------
CR              SUPPLY BLOCK MATERIAL (4D RECORD)                       -
C                                                                       -
CC      PRESENT IF  MNFS*NFSB.GT.0                                      -
C                                                                       -
CL      (SBMASS(I,J),I=1,MNFS),J=1,NFSB)                                -
C                                                                       -
CW              NFSB*MNFS = NUMBER OF WORDS                             -
C                                                                       -
CD      SBMASS          MASS OF NUCLIDE I IN SUPPLY BLOCK J             -
C                                                                       -
C-----------------------------------------------------------------------

C-----------------------------------------------------------------------
CR      INITIAL REACTOR INVENTORY AND FUELING INFORMATION (5D RECORD)   -
C                                                                       -
CL      NCYI,RTIMI,(RMASS(I),I=1,NNR)                                   -
C                                                                       -
CW              NNR+2 = NUMBER OF WORDS                                 -
C                                                                       -
CD      NCYI            REFERENCE CYCLE NUMBER FOR THE INITIAL REACTOR  -
CD                      MASS BALANCE HISTORY                            -
CD      RTIMI           REFERENCE REAL EXPOSURE TIME IN DAYS FOR THE    -
CD                      INITIAL REACTOR MASS BALANCE HISTORY            -
CD      RMASS           REACTOR INVENTORY OF NUCLIDE I AT BEGINNING OF  -
CD                      MASS BALANCE HISTORY                            -
C                                                                       -
C-----------------------------------------------------------------------

C-----------------------------------------------------------------------
CR              FUELING INFORMATION (6D RECORD)                         -
C                                                                       -
CL      NCY,(IK(I),I=1,14),RTIM,POWER,THRML,CNSMPT                      -
C                                                                       -
CW              20 = NUMBER OF WORDS                                    -
C                                                                       -
```

(CONT)

```
CD      NCY             REFERENCE CYCLE NUMBER FOR THIS SET OF MASS     -
CD                      BALANCE DATA                                    -
CD      RTIM            REFERENCE REAL EXPOSURE TIME IN DAYS            -
CD                      REPRESENTED BY THIS SET OF MASS BALANCE DATA    -
CD      POWER           ELECTRICAL POWER LEVEL OF THE REACTOR (WATTS)   -
CD      THRML           THERMAL CONVERSION FACTOR FOR THE REACTOR       -
CD                      (ELECTRICAL POWER/THERMAL POWER)                -
CD      CNSMPT          RATE OF FUEL CONSUMPTION PER UNIT THERMAL       -
CD                      ENERGY GENERATED (KG FISSILE/WATT-DAY)          -
C                                                                       -
C-----------------------------------------------------------------------

C-----------------------------------------------------------------------
CR              INITIAL LOADING MASS BALANCE DATA (7D RECORD)           -
C                                                                       -
CL              (RIMASS(I),I=1,NNR)                                     -
C                                                                       -
CW              NNR = NUMBER OF WORDS                                   -
C                                                                       -
CD      RIMASS          INITIAL REACTOR MASS (PRIOR TO FUELING) OF      -
CD                      NUCLIDE  I                                      -
C                                                                       -
C-----------------------------------------------------------------------

C-----------------------------------------------------------------------
CR              DISCHARGE MATERIAL MASS BALANCE DATA (8D RECORD)        -
C                                                                       -
CC      PRESENT IF  MNFD*NFDB.GT.0                                      -
C                                                                       -
CL      ((TDMASS(I,J),I=1,MNFD),J=1,NFDB),                              -
CL      ((UDMASS(I,J),I=1,MNFD),J=1,NFDB)                               -
C                                                                       -
CW              2*NFDB*MNFD = NUMBER OF WORDS                           -
C                                                                       -
CD      TDMASS          MASS OF NUCLIDE I TRANSFERRED TO DISCHARGE      -
CD                      BLOCK J FOR THIS FUELING                        -
CD      UDMASS          MASS OF UNAVAILABLE DISCHARGE FROM DISCHARGE    -
CD                      BLOCK J                                         -
C                                                                       -
C-----------------------------------------------------------------------

C-----------------------------------------------------------------------
CR              FIXED FEED MASS BALANCE DATA (9D RECORD)                -
C                                                                       -
CC      PRESENT IF  MNFF*NFFB.GT.0                                      -
C                                                                       -
CL      ((FFMASS(I,J),I=1,MNFF),J=1,NFFB)                               -
C                                                                       -
CW              NFFB*MNFF = NUMBER OF WORDS                             -
C                                                                       -
CD      FFMASS          MASS OF NUCLIDE I ADDED FROM FIXED FEED BLOCK J -
C                                                                       -
C-----------------------------------------------------------------------
```

(CONT)

```
C-----------------------------------------------------------------------
CR              SUPPLY MATERIAL MASS BALANCE DATA (10D RECORD)          -
C                                                                       -
CC      PRESENT IF  MNFS*NFSB.GT.0                                      -
C                                                                       -
CL      ((SPMASS(I,J),I=1,MNFS),J=1,NFSB),                              -
CL      ((FBMASS(I,J),I=1,MNFS),J=1,NFSB),                              -
CL      ((PRMASS(I,J),I=1.MNFS),J=1,NFSB),                              -
CL      ((USMASS(I,J),I=1,MNFS),J=1,NFSB)                               -
C                                                                       -
CW              4*NFSB*MNFS = NUMBER OF WORDS                           -
C                                                                       -
CD      SPMASS          MASS OF NUCLIDE I ADDED FROM SUPPLY BLOCK J     -
CD      FBMASS          MASS OF NUCLIDE I LOST FROM INITIAL VOLUME      -
CD                      TRANSFERRED TO SUPPLY BLOCK J DUE TO            -
CD                      FABRICATION LOSSES                              -
CD      PRMASS          MASS OF NUCLIDE I LOST FROM INITIAL VOLUME      -
CD                      TRANSFERRED TO SUPPLY BLOCK J DUE TO            -
CD                      PROCESSING LOSSES                               -
CD      USMASS          MASS OF NUCLIDE I LOST FROM INITIAL VOLUME      -
CD                      TRANSFERRED TO SUPPLY BLOCK J DUE TO            -
CD                      UNAVAILABLE SUPPLY.                             -
C                                                                       -
C-----------------------------------------------------------------------

C-----------------------------------------------------------------------
CR              FINAL LOADING MASS BALANCE DATA (11D RECORD)            -
C                                                                       -
CL      (RFMASS(I),I=1,NNR)                                             -
C                                                                       -
CW                      NNR = NUMBER OF WORDS                           -
C                                                                       -
CD      RFMASS          FINAL REACTOR MASS (AFTER FUELING) OF           -
CD                      NUCLIDE I                                       -
C                                                                       -
C-----------------------------------------------------------------------

C***********************************************************************-
C                                                                       -
CEOF        MASBAL                                                      -
C                                                                       -
C***********************************************************************-
```

SPECIFICATIONS FOR INTERFACE FILE REFUEL

```
C*********************************************************************-
CN                        DATE 01-16-81                               -
C                                                                     -
CF                        REFUEL                                      -
C                                                                     -
CE                FUEL MANAGEMENT SPECIFICATIONS                      -
C                                                                     -
C*********************************************************************-

C---------------------------------------------------------------------
CR                FILE IDENTIFICATION                                 -
C                                                                     -
CL        HNAME,(HUSE(I),I=1,2),IVERS                                 -
C                                                                     -
CW                3*MULT + 1 = NUMBER OF WORDS                        -
C                                                                     -
CD        HNAME             FILE NAME (A6) ='REFUEL'                  -
CD        HUSE              USER IDENTIFICATION (2A6)                 -
CD        IVERS             FILE VERSION NUMBER                       -
C                                                                     -
CN        MULT              1 FOR LONG WORD, 2 FOR SHORT WORD MACHINES -
C                                                                     -
C---------------------------------------------------------------------

C---------------------------------------------------------------------
CS                          FILE STRUCTURE                            -
CS                                                                    -
CS        RECORD TYPE                              PRESENT IF         -
CS        ===========                              ==========         -
CS        FILE IDENTIFICATION                      ALWAYS             -
CS        FILE CONTROL                             ALWAYS             -
CS        NUCLIDE IDENTIFICATION AND BASE DATA     ALWAYS             -
CS        TRANSITION DATA FOR FUEL RECYCLE         NTS.GT.0           -
CS        FIXED FUEL FEED MATERIAL DATA BLOCKS     MNFF*NFFB.GT.0     -
CS        SUPPLY AND DISCHARGE REFERENCE DATA      MNFS*NFSB+MNFD*NFDB.GT.0 -
CS        SUPPLY BLOCK MATERIAL ALLOCATION         NFDB*NFSB.GT.0     -
CS                                                                    -
CS   ********(REPEAT TO NFMS)                                         -
CS   *  FUEL MANAGEMENT CONTROL SPECIFICATIONS  ALWAYS                -
CS   *  FUEL MANAGEMENT SPECIFICATIONS          ALWAYS                -
CS   ********                                                         -
C---------------------------------------------------------------------

C---------------------------------------------------------------------
CR                FILE CONTROL (1D RECORD)                            -
C                                                                     -
CL        NNZ,NNX,NNR,NNO,NQM,NID,NTS,NQ,NFFB,MNFF,NFSB,MNFS,NFDB,    -
CL        MNFD,NFMS,NEC,NFDDB,(NI(I),I=1,3)                           -
C                                                                     -
CW                20 = NUMBER OF WORDS                                -
C                                                                     -
CN                UNDEFINED DATA IS RESERVED FOR FUTURE USE           -
```

(CONT)

```
C                                                                       -
CD      NNZ             *** RESERVED ***                                -
CD      NNX             *** RESERVED ***                                -
CD      NNR             TOTAL NUMBER OF NUCLIDE REFERENCES              -
CD      NNO             NUCLIDE REFERENCING OPTION                      -
CD                       0 BY ABSOLUTE NAME (HANAME)                    -
CD                       1 BY UNIQUE USER NAME (HNNAME)                 -
CD      NQM             NUMBER OF NUCLIDE REFERENCES IN SUPPLEMENTAL    -
CD                      LIST (IF THIS VALUE IS 0, A DEFAULT LIST IS     -
CD                      GENERATED--SEE HIM DESCRIPTION IN NUCLIDE       -
CD                      IDENTIFICATION AND BASE DATA)                   -
CD      NID             *** RESERVED ***                                -
CD      NTS             NUMBER OF TRANSITION SPECIFICATIONS             -
CD      NQ              *** RESERVED ***                                -
CD      NFFB            NUMBER OF FIXED FUEL FEED BLOCKS                -
CD      MNFF            MAXIMUM NUMBER OF NUCLIDES IN ANY FIXED FUEL    -
CD                      FEED BLOCK                                      -
CD      NFSB            NUMBER OF FUEL SUPPLY (RECYCLE) BLOCKS          -
CD      MNFS            MAXIMUM NUMBER OF NUCLIDES IN ANY SUPPLY BLOCK  -
CD                      (IF MNFS IS 0 WHILE NFSB IS NOT, A DEFAULT      -
CD                      NUCLIDE LIST IS GENERATED FOR EACH SUPPLY BLOCK -
CD                      --SEE NSPN DESCRIPTION IN SUPPLY AND DISCHARGE  -
CD                      REFERENCE DATA)                                 -
CD      NFDB            NUMBER OF FUEL DISCHARGE BLOCKS                 -
CD      MNFD            MAXIMUM NUMBER OF NUCLIDES IN ANY DISCHARGE     -
CD                      BLOCK  (IF THIS VALUE IS 0 WHILE NFDB IS NOT,   -
CD                      A DEFAULT NUCLIDE LIST IS GENERATED FOR EACH    -
CD                      BLOCK--SEE NDN DESCRIPTION IN SUPPLY AND        -
CD                      DISCHARGE REFERENCE DATA)                       -
CD      NFMS            NUMBER OF FUEL MANAGEMENT SPECIFICATION SETS    -
CD      NEC             *** RESERVED ***                                -
CD      NFDDB           MAXIMUM NUMBER OF DELAYED DISCHARGE BLOCKS      -
CD                      (A DELAYED DISCHARGE BLOCK IS CREATED AND       -
CD                      MAINTAINED FOR ANY MATERIAL DISCHARGED WITH A   -
CD                      FUELING DELAY)                                  -
C                                                                       -
C-----------------------------------------------------------------------
```

```
C-----------------------------------------------------------------------
CR              NUCLIDE IDENTIFICATION AND BASE DATA (2D RECORD)        -
C                                                                       -
CL      (HFM(I),I=1,NNR),(HIM(J),J=1,NQM),(FLF(I),I=1,NNR),             -
CL      (PLF(I),I=1,NNR),(FQ(I),I=1,NNR),(NQ(I),I=1,NNR)                -
C                                                                       -
CW              MULT*(NNR + NQM) +4*NNR = NUMBER OF WORDS               -
C                                                                       -
CD      HFM             NUCLIDE REFERENCE NAMES FOR NUCLIDE ORDERED I   -
CD                      IN THESE SPECIFICATIONS FOR FUEL MOVEMENT (SEE  -
CD                      OPTION NNO).  THIS LIST IS FOR ALL MATERIALS    -
CD                      MOVED AND ACCOUNTED FOR. (A6)                   -
C                                                                       -
```

(CONT)

```
CD      HIM              NUCLIDE REFERENCE NAMES FOR NORMAL FUEL          -
CD                       MOVEMENT AND FOR FUEL DISCHARGE; HOWEVER, NO     -
CD                       MASS BALANCE ACCOUNTING IS MADE FOR THESE        -
CD                       NUCLIDES. IN ADDITION, THESE NUCLIDES ARE NOT    -
CD                       INCLUDED IN RECYCLE SUPPLY PROCESSING.  (A6)     -
C                                                                         -
CN               NOTE: IF NQM=0 IN THE FILE CONTROL(1D) RECORD, THEN A    -
CN                     DEFAULT HIM LIST IS GENERATED FROM THE LIBRARY     -
CN                     MATERIALS THAT ARE CLASSIFIED AS FISSILE,          -
CN                     FERTILE, OTHER ACTINIDE OR FISSION PRODUCT AND     -
CN                     THAT ARE NOT ALREADY PRESENT IN THE HFM LIST.      -
C                                                                         -
CN               NOTE: NUCLIDES NOT PRESENT IN EITHER HFM OR HIM ARE      -
CN                     ASSUMED TO BE NON-MOBILE STRUCTURAL OR COOLANT     -
CN                     MATERIAL.                                          -
C                                                                         -
CD      FLF              FABRICATION LOSS FRACTIONS                       -
CD      PLF              PROCESSING LOSS FRACTIONS                        -
CD      FQ               *** RESERVED ***                                 -
CD      NQ               *** RESERVED ***                                 -
C                                                                         -
C-------------------------------------------------------------------------

C-------------------------------------------------------------------------
CR               TRANSITION DATA FOR FUEL RECYCLE (3D RECORD)             -
C                                                                         -
CC               PRESENT IF NTS.GT.0                                      -
C                                                                         -
CL      (TSF(I),I=1,NTS),((NTRN(K,I),K=1,2),I=1,NTS)                      -
C                                                                         -
CW               3*NTS = NUMBER OF WORDS                                  -
C                                                                         -
CD      TSF(I)           TRANSITION FRACTION FOR THE NUCLIDE PAIR I       -
CD      NTRN(1,I)        ORIGINAL NUCLIDE I REFERENCE (ORDER NUMBER IN    -
CD                       HFM LIST)                                        -
CD      NTRN(2,I)        PRODUCT NUCLIDE I REFERENCE (ORDER NUMBER IN     -
CD                       HFM LIST)                                        -
C                                                                         -
CN               THESE SPECIFICATIONS ALLOW DECAY OF ONE NUCLIDE TO ITS   -
CN               PRODUCT, OR ALLOW TRANSLATION OF NUCLIDES IN RECYCLED    -
CN               MATERIAL. MULTIPLE PRODUCTS CAN BE SPECIFIED FOR THE     -
CN               SAME ORIGINAL NUCLIDE BUT THE SUM OF THE TRANSITION      -
CN               FRACTIONS MUST BE LESS THAN OR EQUAL TO 1.0              -
C                                                                         -
C-------------------------------------------------------------------------

C-------------------------------------------------------------------------
CR               FIXED FUEL FEED MATERIAL DATA BLOCKS (4D RECORD)         -
C                                                                         -
CC               PRESENT IF MNFF*NFFB.GT.0                                -
C                                                                         -
CL      ((NFN(I,J),I=1,MNFF),J=1,NFFB),((ADB(I,J),I=1,MNFF),J=1,NFFB)     -
C                                                                         -
CW               2*MNFF*NFFB = NUMBER OF WORDS                            -
C                                                                         -
```

(CONT)

```
CD      NFN             REFERENCE NUCLIDES FOR BLOCK  J (ORDER NUMBER   -
CD                      IN HFM LIST)                                    -
C                                                                       -
CN            NOTE: ZEROS MUST BE ADDED TO THE END OF THE NFN STRINGS   -
CN                  IN ORDER TO BLOCK THE ARRAY PROPERLY.               -
C                                                                       -
CD      ADB             ATOM DENSITY OF NUCLIDE NFN(I,J) FOR FEED       -
CD                      MATERIAL  (ATOMS/B-CM)                          -
C                                                                       -
C-----------------------------------------------------------------------

C-----------------------------------------------------------------------
CR              SUPPLY AND DISCHARGE REFERENCE DATA (5D RECORD)         -
C                                                                       -
CC              PRESENT IF MNFS*NFSB+MNFD*NFDB.GT.0                     -
C                                                                       -
CL      ((NSPN(I,J),I=1,MNFS),J=1,NFSB),                                -
CL      ((NDN(K,M),K=1,MNFD),M=1,NFDB)                                  -
C                                                                       -
CW              MNFS*NFSB + MNFD*NFDB = NUMBER OF WORDS                 -
C                                                                       -
CD      NSPN            REFERENCE NUCLIDES FOR SUPPLY BLOCK J (ORDER    -
CD                      NUMBER IN HFM LIST)                             -
C                                                                       -
CN            NOTE: IF MNFS .EQ. 0 WHILE NFSB .NE. 0, A DEFAULT LIST OF -
CN                  ALL NNR NUCLIDES IS GENERATED FOR EACH SUPPLY BLOCK -
C                                                                       -
CD      NDN             REFERENCE NUCLIDES FOR DISCHARGE BLOCK M (ORDER -
CD                      NUMBER IN HFM LIST)                             -
C                                                                       -
CN            NOTE: IF MNFD .EQ. 0 WHILE NFDB .NE. 0, A DEFAULT LIST OF -
CN                  ALL NNR NUCLIDES IS GENERATED FOR EACH DISCHARGE    -
CN                  BLOCK                                               -
C                                                                       -
CN            NOTE: ZEROS MUST BE ADDED TO THE END OF THE NSPN AND NDN  -
CN                  STRINGS IN ORDER TO BLOCK THE ARRAY PROPERLY.       -
C                                                                       -
C-----------------------------------------------------------------------

C-----------------------------------------------------------------------
CR              SUPPLY BLOCK MATERIAL ALLOCATION (6D RECORD)            -
C                                                                       -
CC              PRESENT IF NFDB*NFSB.GT.0                               -
C                                                                       -
CCL     ((RVF(J,I),J=1,NFSB),I=1,NFDB),(NEMO(I),I=1,NFDB)               -
C                                                                       -
CW              NFDB*(1  +  NFSB) = NUMBER OF WORDS                     -
C                                                                       -
CD      RVF             FRACTION OF MATERIAL IN DISCHARGE BLOCK I TO    -
CD                      PUT IN SUPPLY BLOCK J.                          -
CD      NEMO            EXCESS MATERIAL OPTION FOR FUEL DISCHARGE       -
CD                       0-EXCESS MATERIAL NOT USED IN THE REACTOR      -
CD                       1-EXCESS AVAILABLE IN THE NEXT REFUELING       -
```

(CONT)

```
C                                                                       -
CN              A RECORD IS KEPT OF THE MASS OF THE DISCHARGE           -
CN              MATERIAL FOR EACH BLOCK. SUPPLY BLOCKS ARE MADE UP      -
CN              OF MATERIAL TRANSFERRED FROM DISCHARGE BLOCKS AFTER     -
CN              A RECYCLE DELAY, ACCOUNTING FOR PROCESSING AND          -
CN              FABRICATION LOSSES AND TRANSITIONS.  SUPPLY MATERIAL IS -
CN              ALLOCATED UNIFORMLY INTO ALL FEED ZONES REFERENCED      -
CN              BASED ON VOLUME FRACTIONS.                              -
C                                                                       -
C-----------------------------------------------------------------------

C-----------------------------------------------------------------------
CR              FUEL MANAGEMENT CONTROL SPECIFICATIONS (7D RECORD)      -
C                                                                       -
CL      NFST,NZS,ISZN,NFMO,(JI(I),I=1,16)                               -
C                                                                       -
CW              20 = NUMBER OF WORDS                                    -
C                                                                       -
CD      NFST            NUMBER OF DIFFERENT INSTRUCTION LISTS IN THIS   -
CD                      SPECIFICATION                                   -
CD      NZS             MAXIMUM NUMBER OF ZONES (SUBZONES) IN EACH      -
CD                      INSTRUCTION LIST                                -
C                                                                       -
CN              NOTE: FOR NFMO=1 (FUEL RELOCATION), NZS IS THE NUMBER   -
CN                    OF ZONE ENTRIES INCLUDING THE 0 TO TERMINATE      -
CN                    THE EXIT ZONE AND FEED ZONE LIST AND THE TWO      -
CN                    0'S AT THE END OF THE MOVEMENT LIST.              -
C                                                                       -
CD      ISZN            FLAG TO INDICATE ZONE OR SUBZONE REFERENCES     -
CD                       0-MOVE ZONES                                   -
CD                       1-MOVE SUBZONES                                -
CD                       2-MOVE ZONES TO SUBZONES (FOR NFMO=1 ONLY)     -
CD                       3-MOVE SUBZONES TO ZONES (FOR NFMO=1 ONLY)     -
CD      NFMO            FUEL MOVEMENT SPECIFICATION OPTION:             -
CD                       0-NORMAL FUEL ZONE MOVEMENT                    -
CD                       1-FUEL RELOCATION ZONE MOVEMENT (CONTENTS OF   -
CD                         THE SPECIFIED EXIT ZONES ARE TO BE VOLUME    -
CD                         AVERAGED AND ADDED TO SPECIFIED FEED ZONES   -
CD                         WITHOUT CHECKING THE FEED ZONE VOLUMES)      -
C                                                                       -
CN              NOTE: NFST MUST BE 1 FOR NFMO=1.                        -
C                                                                       -
C-----------------------------------------------------------------------

C-----------------------------------------------------------------------
CR              FUEL MANAGEMENT SPECIFICATIONS (8D RECORD)              -
C                                                                       -
CL      (NFB(L),L=1,NFST),(NFRB(L),L=1,NFST),(NSB(L),L=1,NFST),         -
CL      (NDB(L),L=1,NFST),(NFD(L),L=1,NFST),                            -
CL      ((NZ(I,L),I=1,NZS),L=1,NFST)                                    -
C                                                                       -
CW              NFST*(NZS + 5) = NUMBER OF WORDS                        -
```

(CONT)

```
C                                                                       -
CD      NFB             FIXED FEED BLOCK REFERENCE PRIOR TO RECYCLE     -
CD      NFRB            FIXED FEED BLOCK IF RECYCLE IS PRESENT          -
CD      NSB             SUPPLY BLOCK REFERENCE (RECYCLE)                -
CD      NDB             DISCHARGE BLOCK REFERENCE                       -
CD      NFD             REFUELING DELAY IN AVAILABITY FOR RECYCLE       -
CD                       0-NO DELAY; THE DISCHARGED MATERIAL IS         -
CD                         AVAILABLE AS RECYCLE SUPPLY FOR THE          -
CD                         NEXT FUEL CYCLE                              -
CD                       N-DELAY "N" CYCLES; THE DISCHARGED MATERIAL    -
CD                         IS AVAILABLE AS RECYCLE SUPPLY AFTER "N"     -
CD                         CYCLES FROM THE CURRENT CYCLE HAVE           -
CD                         ELAPSED (A DELAYED DISCHARGE BLOCK IS        -
CD                         CREATED FOR EACH ZONE/SUBZONE DISCHARGED     -
CD                         WITH A DELAY)                                -
CD      NZ              ZONE/SUBZONE (SEE  ISZN) NUMBER FOR FUEL        -
CD                      MOVEMENT                                        -
C                                                                       -
C                                                                       -
CN FOR NFMO=0:  NFST SETS OF LISTS OF ZONES (SUBZONES) ARE PRESENTED    -
CN              IN WHICH THE STARTING ZONE IS TO BE REFUELED AND ITS    -
CN              MATERIAL IS TO BE MOVED INTO THE NEXT ZONE SPECIFIED,   -
CN              CONTINUING TO MOVE MATERIAL THROUGH THE LIST UNTIL THE  -
CN              LAST ZONE IS REACHED.  ITS MATERIAL IS TRANSFERRED TO   -
CN              A DISCHARGE BLOCK UNLESS THE ZONE NUMBER IS NEGATIVE,   -
CN              INDICATING CLOSED-LOOP FUEL MOVEMENT IN WHICH THE       -
CN              CONTENTS OF THE LAST ZONE ARE MOVED TO THE FIRST ZONE.  -
CN              THE ZONE LIST IS TERMINATED BY THE FIRST NZ VALUE       -
CN              .LE. 0.                                                 -
C                                                                       -
CN FOR NFMO=1:  ONE LIST OF ZONES (SUBZONES) IS PRESENTED FOR FUEL      -
CN              RELOCATION. THE ZONE LIST CONSISTS OF A SET OF EXIT     -
CN              ZONES TERMINATED BY A 0 ZONE VALUE FOLLOWED BY A SET    -
CN              OF FEED ZONES TERMINATED BY A 0 ZONE VALUE. FOLLOWING   -
CN              THE FEED ZONE SET, OTHER SETS OF EXIT ZONES AND FEED    -
CN              ZONES MAY BE GIVEN. THE MOVEMENT LIST IS TERMINATED     -
CN              WHEN TWO SUCCESSIVE 0 ZONE VALUES ARE ENCOUNTERED OR    -
CN              WHEN THE END OF THE NZS LIST OF ZONES IS ENCOUNTERED.   -
CN              FOR EACH EXIT ZONE/FEED ZONE SET,THE CONCENTRATIONS IN  -
CN              THE EXIT ZONES ARE VOLUME AVERAGED AND PLACED IN THE    -
CN              FEED ZONES SPECIFIED WITHOUT CHECKING THE FEED ZONE     -
CN              VOLUMES. THE ORIGINAL EXIT ZONES REMAIN UNCHANGED       -
CN              (OTHER SPECIFICATIONS ARE NEEDED TO REFUEL OR TO MOVE   -
CN              MATERIAL INTO EXIT ZONES). IN ADDITION, THERE IS NO     -
CN              MASS BALANCE ACCOUNTING FOR FUEL RELOCATION. NFB,NFRB,  -
CN              NSB, NDB, AND NFD MUST BE 0 FOR FUEL RELOCATION         -
CN              ZONE MOVEMENT.                                          -
C                                                                       -
C-----------------------------------------------------------------------
```

(CONT)

```
C-----------------------------------------------------------------------
CR                        COST DATA                        (9D RECORD)    -
C                                                                         -
CL      FXL,PXL,FEI,FEF,PLF,PLA,PLB,FCT,FFT,FST,PHT,PST,PWT,              -
CL      PET,PRA,PRB,UOC,UWC,UPC,RTE,RFE,IF1,IF2,IF3,IF4,IF5,              -
CL      IF6,IF7,IF8,IF9,IF10,IF11,IF12,IL,IM,JSS,ISS                      -
C                                                                         -
CW              47 = NUMBER OF WORDS                                      -
C                                                                         -
C                                                                         -
CD      FXL     FABRICATION LOSS FRACTION                                 -
CD      PXL     PROCESSING LOSS FRACTION                                  -
CD      FEI     FRACTION OF INITIAL LOADING AND FABRICATION TO BE         -
CD              CARRIED OVER LIFE OF PLANT                                -
CD      FEF     FRACTION OF ACTUAL MAKE-UP FUEL THAT MUST BE CARRIED      -
CD              ON HAND FOR REPLACEMENT OVER AND ABOVE USUAL REFUELING    -
CD              (NOT APPLIED TO INITIAL INVENTORY, BUT TO MAKE-UP         -
CD              QUANITIES OVER PRECEEDING PERIOD)                         -
CD      PLF     REACTOR PLANT LOAD FACTOR                                 -
CD              (CAPACITY DIVIDED BY DESIGN CAPACITY)                     -
C                                                                         -
CN   NOTE:  THE DESIGN CAPACITY IS USED IF THE CORE HISTORY IS RUN        -
CN          AT THE DESIGN CAPACITY.  IF THE CORE HISTORY IS RUN ON        -
CN          AN EXPONENTIAL LOAD FACTOR, THE AVERAGE CAPACITY IS USED.     -
C                                                                         -
CD      PLI     INITIAL PLANT LOAD FACTOR IF THE LOAD FACTOR DECREASES    -
CD              EXPONTIALLY. NOT USED IF LOAD FACTOR IS CONSTANT.         -
CD      PLA       ***RESERVED***                                          -
CD      PLB       ***RESERVED***                                          -
CD      FCT     CONVERSION COST LEAD TIME (FROM START OF USE OF FUEL,     -
CD              IN YEARS)                                                 -
CD      FFT     FABRICATION COST LEAD TIME                                -
CD      FST     SHIPPING COST LEAD TIME                                   -
CD      PHT     HOT STORAGE LAG TIME (FROM REMOVAL FROM THE REACTOR,      -
CD              IN YEARS)                                                 -
CD      PST     SHIPPING COST LAG TIME                                    -
CD      PWT     WASTE DISPOSAL COST LAG TIME                              -
CD      PET     UNUSED MATERIAL COST LAG TIME                             -
CD      PRA       ***RESERVED***                                          -
CD      PRB       ***RESERVED***                                          -
CD      UOC     UNIT ORE FEED COST  (  /KG)                               -
CD      UWC     UNIT SEPARATIVE WORK COST, EQUIVALENT  (   /KG)           -
CD      UPC     UNIT PRODUCT TREATMENT COST  (   /KG)                     -
CD      RTE     REFERENCE TAILS ENRICHMENT  (FRACTION)                    -
CD      RFE     REFERENCE FEED ENRICHMENT  (FRACTION)                     -
C                                                                         -
CD      ****10 MORE UNDEFINED FLOATING POINT NUMBERS****                  -
C                                                                         -
```

(CONT)

```
CD     IF1      FISSILE ENRICHMENT COST CALCULATION OPTION                -
CD                0  NO COST CALCULATION IS PERFORMED.  THE INPUT NUC-    -
CD                   LIDE RELATIVE WORTH IS USED WITHOUT MODIFICATION.    -
CD                   (APPLICABLE TO FULLY ENRICHED COSTING BUT BEWARE     -
CD                   DILUTION WORTHS)                                     -
CD                1  CALCULATE AT FIXED ENRICHMENT TAILS CONDITION.       -
CD                   NUCLIDE WORTH IS CALCULATED USING THE INPUT TAILS    -
CD                   ENRICHMENT.                                          -
CD                2  CALCULATE AT OPTIMUM ENRICHMENT TAILS CONDITION.     -
CD                   THE OPTIMUM TAILS ENRICHMENT IS CALCULATED           -
CD                   AND USED TO CALCULATE THE NUCLIDE WORTH.             -
CD      IF2       ***RESERVED***                                          -
CD       |                                                                -
CD       !                                                                -
CD       !                                                                -
CD       V                                                                -
CD      IF12       ***RESERVED***                                          -
CD      IL        NUMBER OF SETS OF DATA ASSOCIATED WITH FABRICATION      -
CD      IM        NUMBER OF SETS OF DATA ASSOCIATED WITH PROCESSING       -
C                                                                         -
CN   NOTE:  THE FIRST SET IS THE REFERENCE SET.  IF THERE ARE MORE        -
CN          THAN ONE SET, THE SECOND SET APPLIES TO THE FIRST             -
CN          STREAM,E ETC.  THE REFERENCE DATA IS USED FOR ANY             -
CN          STREAM NOT ASSIGNED A SPECIFIC DATA SET.                      -
C                                                                         -
CD      JSS       MAXIMUM NUMBER OF ACTINIDE ISOTOPES IN ANY SET          -
CD      ISS       NUMBER OF ACTINIDE ISOTOPE SETS                         -
C                                                                         -
C-------------------------------------------------------------------------

C-------------------------------------------------------------------------
CR                FUEL MANAGEMENT ECONOMICS DATA          (10D RECORD)    -
C                                                                         -
CL      (FFC(L),L=1,IL),(FDD(L),L=1,IL),(FRC(L),L=1,IL),                  -
CL      (FSC(L),L=1,IL),(FSQ(L),L=1,IL),                                  -
CL      (PHC(M),M=1,IM),(PSC(M),M=1,IM),(PPC(M),M=1,IM),                  -
CL      (PWC(M),M=1,IM),(PEC(M),M=1,IM),(PXQ(M),M=1,IM),                  -
CL      (FNC(I),I=1,NNR),(FNW(I),I=1,NNR),(FNQ(I),I=1,NNR)                -
CL      (ISX(I,J),I=1,ISS,J=1,JSS),(ISX(I,K),I=1,ISS,K=1,3)               -
C                                                                         -
CW                5*IL + 6*IM + 3*NNR + ISS(JSS+3) = NUMBER OF WORDS      -
C                                                                         -
CD      FCC(L)    CONVERSION COST FOR STREAM L  (  /KG DISCHARGE)         -
CD      FFC(L)    FRESH FABRICATION COST  (        /KG DISCHARGE)         -
CD      FRC(L)    RECYCLE FABRICATION COST  (      /KG DISCHARGE)         -
CD      FSC(L)    SHIPPING  COST TO PLANT  (       /KG DISCHRGE)          -
CD      FSQ(L)      ***RESERVED***                                        -
CD      PHC(M)    HOT STORAGE COST  (    /KG DISCHARGE)                   -
CD      PSC(M)    SHIPPING COST TO PROCESSING  (   /KG DISCHARGE)         -
CD      PPC(M)    PROCESSING COST  (     /KG DISCHARGE)                   -
CD      PWC(M)    WASTE DISPOSAL COST  ( /KG DISCHARGE)                   -
```

(CONT)

```
CD      PEC(M)  COST OF HANDLING UNUSED MATERIAL (COULD BE A DISPOSAL   -
CD              COST  (      /KG DISCHARGE)                             -
CD      PXQ(M)    ***RESERVED***                                        -
CD      FNC(I)  COST OF NUCLIDE ORDERED I IN NUCLIDE REFERENCE LIST     -
CD              PURCHASED  ( /KG)                                       -
CD      FNW(I)  WORTH OF NUCLIDE ORDERED I IN NUCLIDE REFERENCE LIST    -
CD              SOLD  (      /KG)                                       -
C                                                                       -
CN  NOTE:  NEGATIVE VALUES FOR FNC AND FNW MAY BE APPROPRIATE,          -
CN         SUCH AS A PENALTY FOR U236                                   -
C                                                                       -
CD      FNQ(I)    ***RESERVED***                                        -
CD     ISX(I,J) ACTINIDE ISOTOPE ORDER NUMBER IN NUCLIDE REFERENCE NAME -
CD               LIST (2D RECORD) IN SET J INDEX I.  ZERO ENTRIES ALLOW -
CD               AT THE END OF LIST(REQUIRED TO DETERMINE ENRICHMENT    -
CD               WORTH)                                                 -
CD      IXF(I,J) REFERENCE FISSILE NUCLIDE IN SET I FOR WHICH ENRICHMEN -
CD               COSTS ARE CALCULATED                                   -
C                                                                       -
CN   NOTE:  ENRICHMENT WORTHS ARE BASED ON THE SUM OF THE INDIVIDUAL    -
CN          FISSILE ISOTOPE FRACTIONS AND DISTRIBUTED BY RELATIVE WORTH -
C                                                                       -
C-----------------------------------------------------------------------

C***********************************************************************-
C                                                                       -
CEOF        REFUEL                                                      -
C                                                                       -
C***********************************************************************-
```