MARTIN MARIETTA ENERGY SYSTEMS LIBRARIES
3 4456 0251192 1

ORNL/TM-6237

ornl

OAK
RIDGE
NATIONAL
LABORATORY

UNION
CARBIDE

Summary of Research and Development Effort on Closed-Cycle Gas Turbines

A. P. Fraas

OAK RIDGE NATIONAL LABORATORY
CENTRAL RESEARCH LIBRARY
CIRCULATION SECTION
4500N ROOM 175
LIBRARY LOAN COPY
DO NOT TRANSFER TO ANOTHER PERSON
If you wish someone else to see this report, send in name with report and the library will arrange a loan.
JCN-7969 3 9-77

Fossil
Energy
Program

OPERATED BY
UNION CARBIDE CORPORATION
FOR THE UNITED STATES
DEPARTMENT OF ENERGY

Printed in the United States of America. Available from
National Technical Information Service
U.S. Department of Commerce
5285 Port Royal Road, Springfield, Virginia 22161
NTIS price codes—Printed Copy: A03 Microfiche A01

This report was prepared as an account of work sponsored by an agency of the United States Government. Neither the United States Government nor any agency thereof, nor any of their employees, makes any warranty, express or implied, or assumes any legal liability or responsibility for the accuracy, completeness, or usefulness of any information, apparatus, product, or process disclosed, or represents that its use would not infringe privately owned rights. Reference herein to any specific commercial product, process, or service by trade name, trademark, manufacturer, or otherwise, does not necessarily constitute or imply its endorsement, recommendation, or favoring by the United States Government or any agency thereof. The views and opinions of authors expressed herein do not necessarily state or reflect those of the United States Government or any agency thereof.

ORNL/TM-6237
Dist. Category UC-90f

Contract No. W-7405-eng-26

Engineering Technology Division

SUMMARY OF RESEARCH AND DEVELOPMENT EFFORT ON CLOSED-CYCLE GAS TURBINES

A. P. Fraas

Date Published: June 1981

Prepared by the
OAK RIDGE NATIONAL LABORATORY
Oak Ridge, Tennessee 37830
operated by
UNION CARBIDE CORPORATION
for the
DEPARTMENT OF ENERGY

MARTIN MARIETTA ENERGY SYSTEMS LIBRARIES

3 4456 0251192 1

CONTENTS

	Page
ABSTRACT	1
INTRODUCTION	1
BACKGROUND	2
System Description	3
Advantages and Disadvantages	6
Operating Experience	10
Army package power plant	10
NASA space power plant	10
Gas-cooled reactor central stations	12
Bureau of Mines experiment	12
Fluidized-bed coal combustion system	12
Ceramic heat exchangers	13
Summary of Costs and Running Time	13
RECOMMENDATIONS	14
PRINCIPAL PROBLEMS AND PARAMETERS	15
Relative Magnitude of Capital and Fuel Costs	15
Combustion System	16
Turbine Inlet Temperature	17
System Pressure	17
Ratio of Pumping Power to Heat Removal	17
Regenerator Effectiveness	18
Recuperator Effectiveness	18
Choice of Working Fluid	20
Shaft Seal	21
Ceramic Heaters	21
DEVELOPMENTAL STATUS	23
Army Package Power Plant	23
NASA Closed-Cycle Gas Turbine for Space Power Applications	24
ORNL Closed-Cycle Gas Turbine Coupled to a Fluidized-Bed Coal Combustion System	25
ACKNOWLEDGMENT	26
REFERENCES	27

SUMMARY OF RESEARCH AND DEVELOPMENT EFFORT ON CLOSED-CYCLE GAS TURBINES

A. P. Fraas

ABSTRACT

The closed-cycle gas turbine has the advantage over the open-cycle one in that it can utilize dirty fuels such as residual fuel oil, coal, or lignite. Further, there is practically no loss in thermal efficiency at part load, and waste heat can be rejected at temperatures up to 370°C (700°F) for use in industrial processes. The system has the disadvantage that the peak turbine inlet temperature is limited to ∿815°C (1500°F) by stress and corrosion in the heat exchanger between the combustion products and the turbine working fluid. A review of 40 years of research and development effort on closed-cycle gas turbines together with over 30 years of commercial experience with a dozen systems in Europe indicates that if used just for the production of electric power they yield a system a little higher in capital costs and a little lower in thermal efficiency than a conventional steam system. However, if a dirty fuel is to be used for cogeneration applications where the ratio of the heat energy required to the electrical energy produced is less than 4, particularly if the heat is required at temperatures greater than 100°C (212°F), both the efficiency of utilization of the energy in the fuel and the capital costs are more attractive for a closed-cycle gas turbine than for a steam system.

INTRODUCTION

This is one of a series of topical reports each of which reviews the research and development effort on one of a set of advanced energy conversion systems. In particular, it is a corollary to a general report on gas turbines,[1] a basic report in this set. The first portion of each report briefly summarizes the background by giving a chronological history of the research and development effort on the system up to 1977 with the cumulative costs and system operating times. The next section points up the vital problem areas and recommends experiments deemed most likely to resolve these problems. This is followed by a more detailed discussion of the principal problem areas, performance parameters, and figures of merit characteristic of the system. The current status of the

development work is then outlined, and a more detailed presentation of the experience gained in the development effort with particular reference to progress in improving the principal performance parameters is given. This includes the principal reference designs that have been published on projected full-scale commercial systems, compares these designs, and appraises the relationship of the performance parameters anticipated in the full-scale plant designs with those that have been achieved in the course of the developmental program with a view to providing a basis for appraising the amount of time and funding likely to be required to achieve the objectives envisioned in the designs for the full-scale commercial plants.

This work was carried out at the request of the Office of Program Planning and Analysis of the DOE Fossil Energy Program using funds provided for a general appraisal of advanced fossil energy systems.

BACKGROUND

The closed-cycle gas turbine was patented by Ackeret and Keller in Switzerland in 1936, and one of the first gas turbines to produce significant amounts of electric power was a closed-cycle system built and operated in Switzerland in 1939.[2,3] Since that time, 14 fairly large commercial units have been built and operated in Europe, and a number of small special-purpose units have been built and operated in the U.S.[4]

At the time of writing, the primary interest in closed-cycle gas turbines in the U.S. stems from the fact that industrial and institutional organizations currently using natural gas or distillate fuels for on-site plants that generate both electricity and process heat are being faced with a need to shift to coal as fuel. The power requirements of these organizations are generally in the range of 1 to 50 MW(e).[5,6] They need to be able to procure, install, and bring onto line new power sources in periods of two to three years.[5] For industrial process heat, the amounts of heat and the temperature requirements are peculiar to the process; hence the power plant must be of a type that can be tailored to meet them. For institutional and commercial building heating and air conditioning applications, the requirements for both heat and electricity

vary diurnally, weekly, and seasonally so that a flexible system is required. The closed-cycle gas turbine coupled to a fluidized-bed coal combustion system appears to be especially well suited to these applications,[5,6] which are responsible for a large fraction of U.S. energy consumption.

System Description

Figure 1 is a flowsheet for a closed-cycle gas turbine designed to operate with a fluidized-bed coal combustion system as the heat source. This unit was designed to produce both electricity and heat for building heating or industrial processes.[7,8] The heat source, in the form of a fluidized-bed coal combustion system, is located a little to the right of the center of the flowsheet, and the closed-cycle gas turbine system

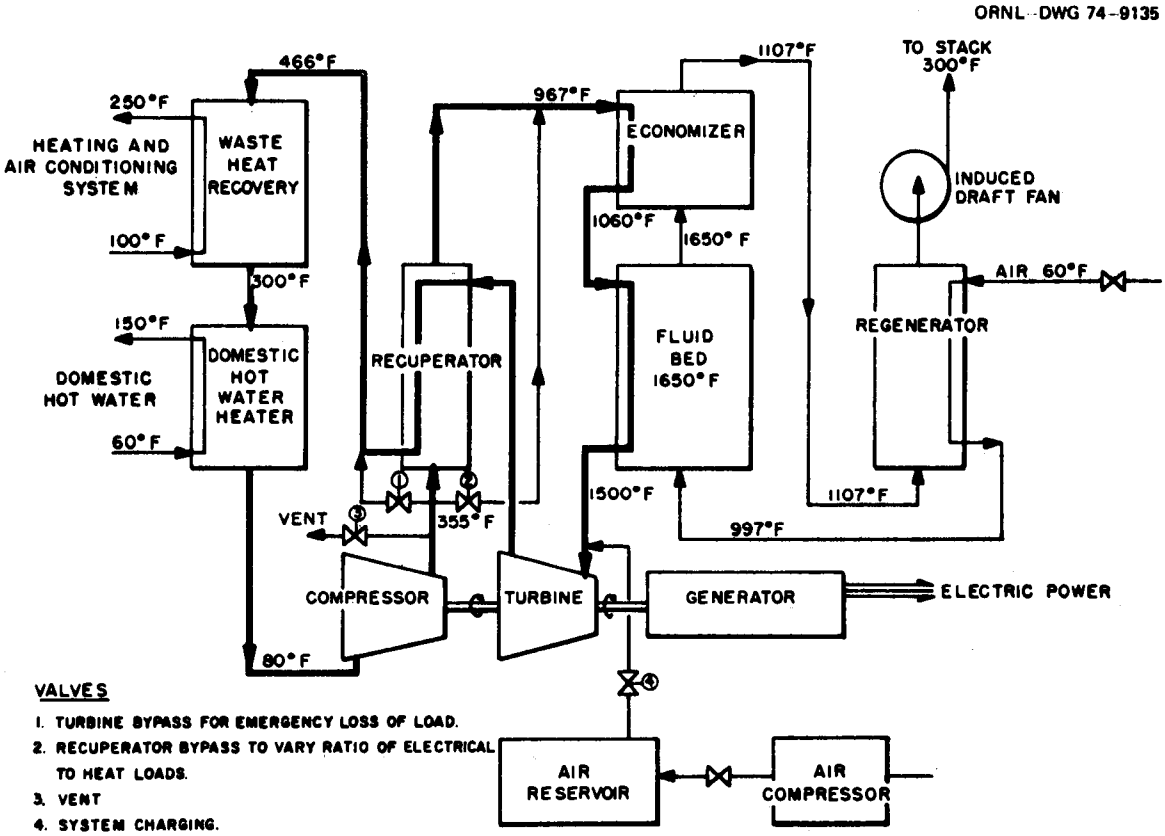

Fig. 1. Flowsheet for a closed-cycle gas turbine coupled to a fluidized-bed coal combustion system.[8]

coupled to it lies below it. Air heated by the fluidized bed goes to the gas turbine inlet at 815°C (1500°F) and about 10 atm at full power. The hot air exhausted from the turbine at about 580°C (1075°F) enters the recuperator, where it gives up much of its heat to air enroute from the compressor to the fluidized-bed coal combustion system. The turbine air stream leaving the recuperator for the furnace passes first through an economizer section which removes a substantial amount of heat from the combustion gas leaving the fluidized bed. The low-temperature, low-pressure turbine exhaust stream leaving the recuperator passes first to a waste heat recovery heat exchanger to provide process heat, in this instance for the heating and air conditioning system for building complexes. The low-pressure turbine air stream, before going to the compressor, is cooled further to 27°C (80°F) by giving up its heat to potable water for the domestic hot water system. The combustion air system on the right side of the flowsheet takes air in at atmospheric conditions and preheats it to about 535°C (997°F), partly to reduce stack losses and partly to improve combustion conditions in the fluidized bed. The combustion gas leaving the system is cooled in the regenerator to 150°C (300°F) and is discharged through an induced draft fan and a bag house to remove ash particles. (The bag house and a forced draft fan at the air inlet are not shown in the flowsheet.) Note that an air compressor and air reservoir are provided at the bottom, so that the pressure in the turbine air system can be increased rapidly to accommodate an increase in load. Similarly, a vent valve (No. 3) just above the compressor provides for a rapid reduction in system pressure to accommodate a drop in load. Provision has also been made for bypassing a portion of the air from the compressor around the recuperator to reduce the amount of heat recovered from the hot turbine exhaust. In this way the ratio of the energy recovered as heat to the energy produced as electricity can be changed with changing load conditions. Finally, valve No. 1, in the lower left corner of the recuperator, makes it possible to bypass high-pressure air around the furnace and turbine if a mismatch between the compressor and turbine should occur under some peculiar load conditions.

Although the design shown is intended to give a relatively high thermal efficiency in the conversion of chemical energy in the fuel into electricity (about 30%) while about 50% is recovered as heat at about 120°C (250°F), the recuperator could be replaced with an intermediate-temperature steam generator to yield steam at about 260°C (500°F) if desired. This would, of course, increase the ratio of thermal energy output to electrical output but still would represent an improvement in energy utilization over a steam turbine system in which steam would be bled from intermediate stages or the turbine operated purely as a back-pressure turbine.[9] Figure 2 shows the specific heat

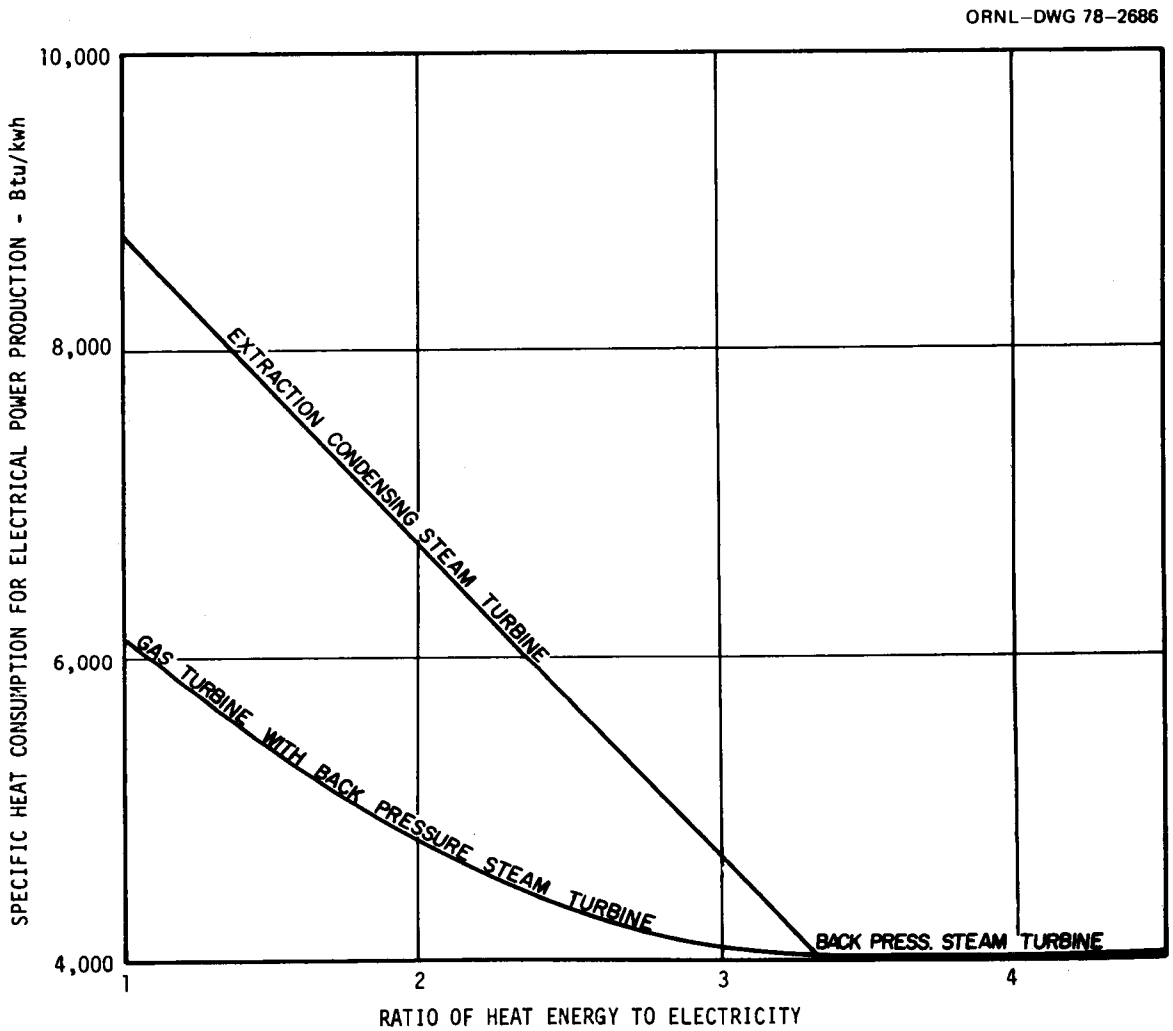

Fig. 2. Replot of data from *Sulzer Technical Review* (April 1975) showing the heat rates for both gas and steam turbines where both process heat and electricity are required.

consumption for electrical energy production as a function of the ratio of electrical to heat output for both a closed-cycle gas turbine system and a conventional back-pressure steam turbine employed for industrial plants. Note the distinct advantage of the closed-cycle gas turbine for applications where process heat is required with a fairly low ratio of heat to electricity.

The same basic system could also be used to provide clean air at temperatures up to 815°C (1500°F) for heat treating, paint drying, or other industrial processes requiring clean, high-temperature heat. This would, of course, reduce the ratio of electrical to thermal output.

Advantages and Disadvantages

The closed-cycle gas turbine system was originally conceived as a means of effecting good control of the system over a wide range of loads with essentially no loss in overall system thermal efficiency with a reduction in load down to around 25% of design output.[3] This is accomplished by varying the pressure in the closed-cycle system; the output of the turbine is directly proportional to the mass flow of gas if the turbine inlet temperature is held constant. This is in sharp contrast to the performance characteristics of conventional open-cycle gas turbines in which control is accomplished by varying the turbine inlet temperature. That not only reduces the ideal cycle efficiency as the temperature is dropped and the load is reduced, but it also leads to a mismatch between the turbine and compressor because the volumetric flow rate through the turbine is reduced, the relative velocity of the gas entering and leaving the turbine buckets changes, and the aerodynamic efficiencies of the turbine and compressor vary as a consequence. (Note that this does not happen in a closed-cycle gas turbine where the temperatures throughout the system remain substantially constant irrespective of load as does the volumetric flow rate of gas.) Figure 3 shows the overall thermal efficiency for both a closed regenerated cycle and a simple open cycle as a function of load.

Early experience with gas turbines quickly showed that they are not well suited to operation on dirty fuels; even trace amounts of solid

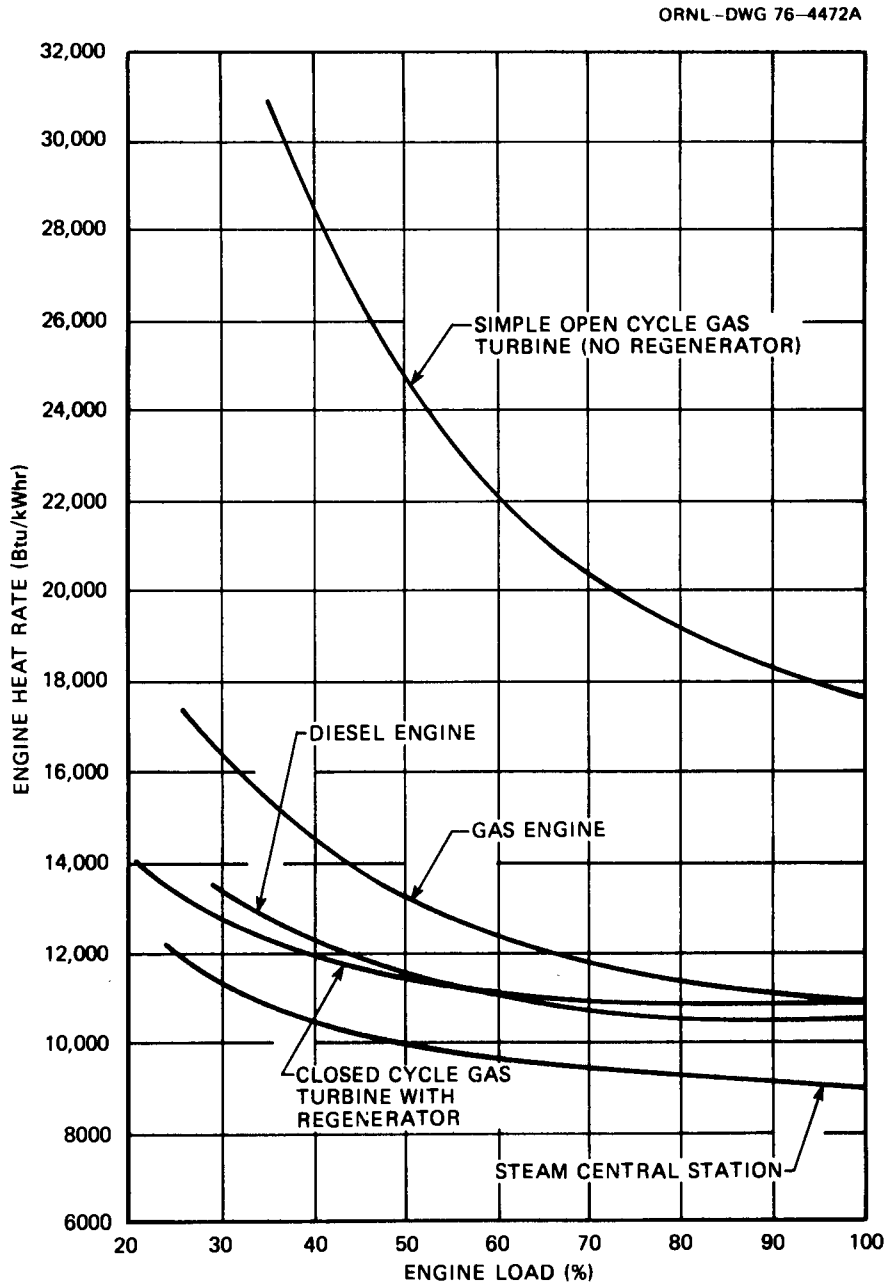

Fig. 3. Effects of load on the heat rate for typical diesel and gas engines, simple open-cycle and regenerated closed-cycle gas turbines, and a large steam central station.

particles lead to turbine bucket erosion and deposits in the rotor and stator that obstruct the air flow and detract from the aerodynamic efficiency.[10,11] Thus, a major second advantage of the closed-cycle gas turbine is that it can be operated with dirty fuel. This has been a

particularly important advantage in Europe in the past where there has been a strong incentive to make use of readily available low-grade coal or dirty gas.

A third major advantage of the closed-cycle gas turbine is that if a recuperator is introduced to increase the cycle efficiency or if a waste heat recovery unit is to be installed in the turbine exhaust, the size and cost of these heat exchangers can be reduced because in the closed-cycle system the hot gas from the turbine would be at a pressure of 3 to 10 atm. The high gas density reduces the heat transfer surface area requirements by a factor of 2 to 6. This is extremely important because even for closed-cycle units the cost of the heat exchangers is commonly several times that of the gas turbine-compressor unit.

A fourth important advantage of the closed-cycle gas turbine is that even in small sizes the Reynolds number is sufficiently high to give a good turbine efficiency. As a consequence, gas turbines yield a definite efficiency advantage over steam turbines for power outputs under about 5 MW(e), and this advantage becomes very pronounced for power outputs below 1 MW(e), particularly if a high-molecular-weight gas is used instead of air for outputs below 100 kW(e).

The principal disadvantage of the closed-cycle gas turbine for fossil-fuel-fired applications is the cost of the heat exchanger required to transfer heat from the combustion products to the turbine working fluid. These units are large, heavy, and expensive. Secondly, the metal temperature in this heat exchanger must be somewhat higher than the gas temperature entering the turbine; hence its strength and corrosion resistance limit the peak operating temperature and thus the thermal efficiency. The open-cycle gas turbine, on the other hand, can operate with cooled walls so that the turbine inlet gas temperature can run hundreds of degrees centigrade above the temperature of the hottest metal.[1] These effects are indicated in Fig. 4, which shows the thermal efficiency as a function of temperature for both a simple open cycle and a closed cycle with regeneration. Note also that the pressure drop and pumping power losses in the various components of the closed-cycle system together with the somewhat higher compressor inlet temperature act to degrade the thermal efficiency of the closed-cycle system.

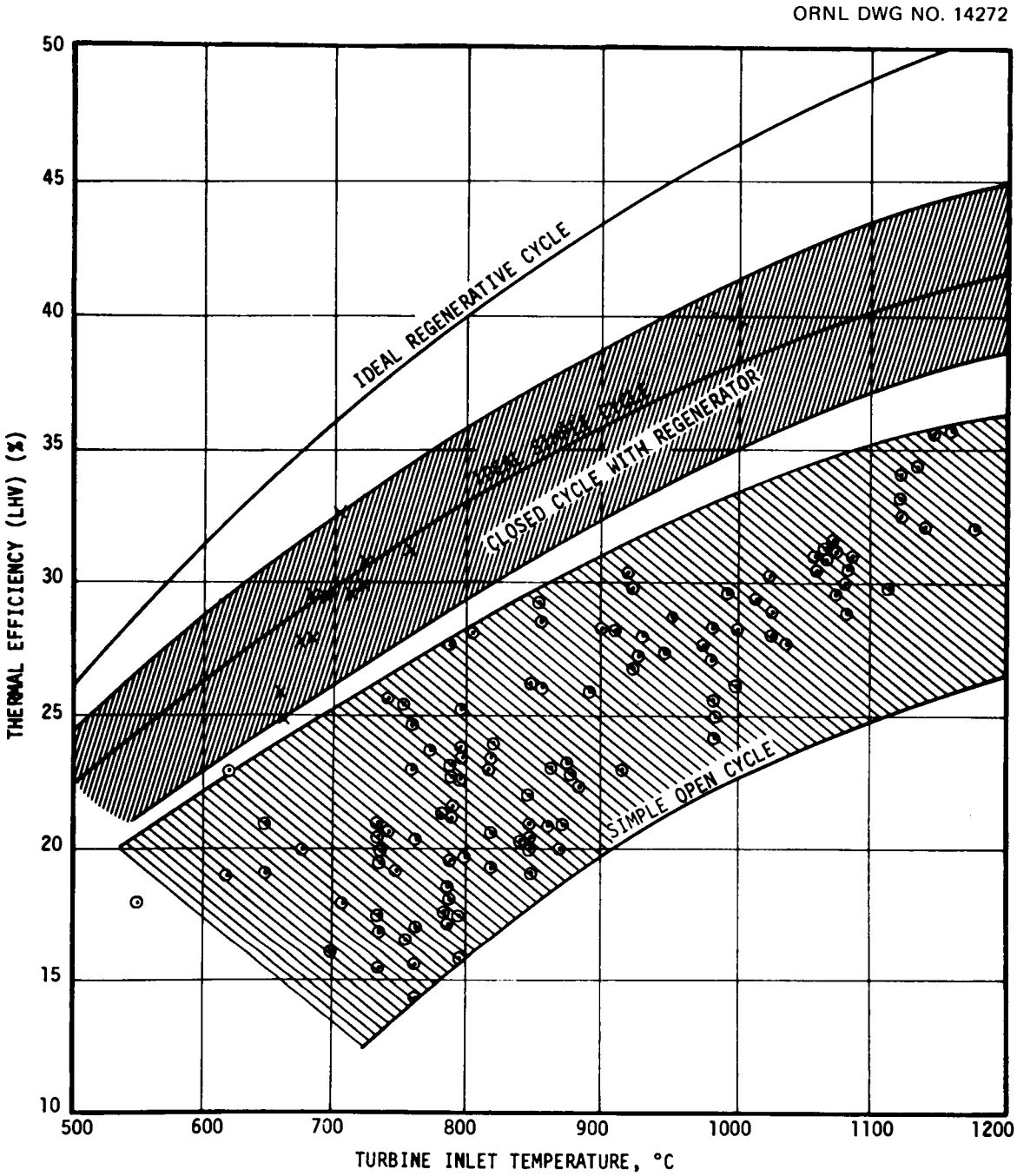

Fig. 4. Reported turbine inlet temperatures and thermal efficiencies for gas turbines installed during 1950 to 1976 compared to the ideal efficiencies of both simple open and regenerative closed cycles having a compressor efficiency of 88% and a turbine efficiency of 90%.

A third disadvantage of the closed-cycle gas turbine for some applications is that a substantial amount of cooling water is required to cool the recirculated gas before it enters the compressor. In some instances, this heat exchanger can be integrated into the process heat system so that this requirement does not represent a penalty, but in other instances it may constitute an important disadvantage of the closed-cycle gas turbine.

Operating Experience

Table 1 lists the 14 closed-cycle gas turbine units that have been operated commercially abroad.[4] Most of these have employed dirty fuels. The demonstrated reliability has been high, but the capital costs have also been relatively high.

Army package power plant

The principal operating experience in the U.S. with closed-cycle gas turbine systems has been with two relatively small special-purpose units. The first of these was an Army package power unit employing a high-temperature nitrogen-cooled fission reactor as the heat source. The turbine was designed for an output of 415 kW(e).[12] Turbines were first operated with combustion-fired heaters in the course of the component development program. The total operating time in the program was 8000 hr.[13]

NASA space power plant

One of the NASA nuclear electric power units developed in the 1960's made use of a closed-cycle gas turbine designed to operate with an isotope heat source.[14] Units of this model have operated a total of 39,395 hr, 26,000 hr of which has been on the principal system tested.[15] The longest uninterrupted run was 7200 hr. The working fluid was a mixture of helium and either argon or krypton in an effort to get a good compromise between a high heat transfer coefficient and a high molecular weight to obtain a good efficiency in the compressor and turbine.

Table 1. Summary of closed-cycle industrial and utility power plants that have been built and operated

Units	Manufacturer	Application	Continuous output [MW(e)]	Heat supply (MW)	Plant efficiency (%)	Commissioning date	Running time (hr)	Fuel	Turbine inlet temperature (°C)	Compressor inlet pressure (bars)	Remarks
Escher-Wyss, Zurich, Switzerland	Escher-Wyss	Power	2		32.6	1940	6000	Oil	700		First test plant retired
Ravensburg, Germany	E-W + GHH	Power & heat	2.3	2.3–4.1	25	1956	120,000 to 6-76	Coal or oil	660	7.2	
Coburg, Germany	GHH	Power & heat	6.6	8–16	28	1961	100,000 to 6-75	Coal	680	7.3	
Oberhausen I, Germany	GHH	Power & heat	13.75	18.5–28	29.5	1960	100,000 to 6-76	Coal/coke oven gas	710	8	
Oberhausen II, Germany	GHH + EVO	Power & heat	50	53	31.3	1975	3,000 to 5-76	Coke oven gas	750	10.5	First use of helium as working fluid in electric power plant
Haus Aden, Germany	GHH	Power & heat comp. drive	6.4	7.8	29.5	1963	100,000 to 6-75	Mine gas + coal	680	9.3	
Gelsenkirchen, Germany	GHH	Power & heat	17.25	20–29	30	1967	75,000 to 6-76	Bl. furn. gas & oil	711	10.2	
St. Denis, Paris, France		Power	12.5			1951	5,000 since '56	Oil	660		First big plant/double pressurized heater
Toyotomi, Japan	Fuji Elect. & E-W	Power	2.0		26	1957	90,000	Nat. gas	660	7.2	
Nippon Koran, Japan	Fuji Elect.	Power	12		29	1961	85,000 to 12-70	Bl. furn. gas	680	6.7	
Rothes, Great Britain		Power	2.0			1960	~1,000	Coal slurry	660		Stopped due to mine closure
Altnabreak, Great Britain		Power	2.2			1959	~1,000	Peat	660		Stopped due to mine closure
Kashira, Russia	E-W	Power & heat	12	9–12	28	1961		Brown coal	680	7	Achieved guarantees
Spittelau, Austria	BBC/E-W	Power & heat	30–22	29–58	31–24	1972		Oil or gas	720		Achieved guarantees, dismantled
Die Oxygene, Phoenix	E-W & LaFleur	Cryogenic gas production	2			1966	5,000	Nat. gas	680		Helium fluid, dismantled
Adv. Power Conv. Exp. Test Facilities, Ft. Belvoir, Va.	Corps of Engineers (Stratos et al.)	Army power requirements	0.5		18.6	1959		Oil	650	8.1	Experimental (fluid, N_2)
Adv. Power Conv. Skid Experiment, San Ramon, Calif.	Corps of Engineers (Stratos et al.)	Army power requirements	0.500		16.7	1964		Oil	650	8.1	Experimental (fluid, N_2)

Gas-cooled reactor central stations

There has been a great deal of interest in the use of closed-cycle gas turbines with high-temperature gas-cooled reactors for central stations, and many design studies have been carried out in the past 20 years.[16] This is an obvious application because clearly it is necessary to circulate gas through the reactor to remove the heat generated, the gas must be helium to give good heat transfer characteristics, and hence, at least superficially, the obvious thermodynamic cycle to employ is a gas turbine.[17] Unfortunately, all-ceramic high-temperature fuel elements emit a few parts per million of the radioactive fission products, vastly more than is the case for the metal-encapsulated, lower-temperature, water-cooled reactors. As a consequence, the plant layout is heavily dependent on reactor safety and maintenance considerations, the adverse effects of which lead to a situation that favors the use of a steam turbine that is isolated from the reactor coolant circuit rather than a gas turbine,[18] and hence the only significant operating experience with such a system is the small Army package power unit cited above.

Bureau of Mines experiment

The possibility of using a coal-fired closed-cycle gas turbine was investigated by the Bureau of Mines using a single-stage centrifugal compressor coupled to a single-stage axial turbine designed to produce ∿30 kW(e). The unit was operated on nitrogen at temperatures up to 808°C (1485°F). A similar unit with a T2M turbine rotor was subsequently operated for ∿100 hr at temperatures up to 843°C (1550°F).[19]

Fluidized-bed coal combustion system

A closed-cycle gas turbine system designed for operation with an atmospheric fluidized-bed coal combustion chamber has been designed at ORNL, and plans have been made to construct an experimental unit.[20] The principal features of the concept are presented along with the flowsheet of Fig. 1. The basic concept appears to have major advantages for industrial and institutional applications where the amount of process heat required is two to four times that for electrical energy.

Ceramic heat exchangers

The efficiency of closed-cycle gas turbines could be increased if it were possible to build ceramic heat exchangers that could be operated at a temperature of around 1100°C (2000°F). The excellent high-temperature strength and oxidation resistance of ceramics such as SiC and Si_3N_4 make them appear attractive. This possibility is being investigated in programs funded by both Electric Power Research Institute (EPRI) and DOE-FE. The problems involved are discussed in a later section in light of the extensive experience with brittle failures in ceramic components in other fields.[21] This experience indicates that, unless the pressure of the combustion gases in the furnace is about the same as that of the air in the turbine circuit, the prospects of success in getting ceramic tubes to withstand the severe pressure, thermal, and vibrational stresses implicit in this application are very slim indeed.

Summary of Costs and Running Time

The research and development costs of the European closed-cycle gas turbine systems are not available but appear to have been quite modest. The costs and running time accumulated under U.S. closed-cycle gas turbine programs are summarized in Table 2. Note that these costs are actual program costs in terms of the dollars of the year in which they

Table 2. Summary of U.S. closed-cycle gas turbine system program costs and running times

	Total funds ($)	Total system running time to May 1977 (hr)
Gas turbine system for 415-kW(e) Army Package Power Reactor (1957–1970)	20,000,000[a]	8,000
NASA gas turbine system for a 7-kW(e) space power plant (1961–1977)	26,000,000	37,395
ORNL fluidized-bed coal combustion system coupled to a 325-kW(e) closed-cycle gas turbine (1974–1979)	∿5,000,000[b]	0

[a]Does not include reactor costs.

[b]Estimated for completion of construction plus 5000-hr run.

were spent with no effort to correct these costs to constant dollars for some recent year to allow for inflation.

RECOMMENDATIONS

Extensive work in both the U.S. and Europe in the course of the past 30 years indicates that the closed-cycle gas turbine has been less attractive than a conventional steam plant for electric energy production in utility service with the fuel price structure that has prevailed. However, design studies in the U.S., coupled with both design studies and extensive operating experience in Europe, indicate that the closed-cycle gas turbine yields an attractive system for industrial and institutional applications requiring both electricity and process heat if coal is to serve as the fuel. Such installations make it possible to obtain as much as 90% of the chemical energy in the fuel in the form of either heat or electricity. Further, the system is flexible in that the ratio of the amount of heat produced to the amount of electricity can be varied while maintaining a high overall efficiency in the use of the chemical energy in the fuel, and the system can be operated over the full load range from 100% down to 25% of the design output with little loss in efficiency.

A closed-cycle gas turbine appears to be particularly well suited for coupling to a fluidized-bed coal combustion system. The principal uncertainty appears to be the practicable operating temperature limit for materials in the heat transfer matrix immersed in the fluidized-bed coal combustion chamber. Thus, extended endurance tests of the more promising alloys for such a heat transfer matrix should be expedited. The tests should include the possible effectiveness of the more promising coatings designed to inhibit oxidation and sulfidation of the alloys.

Extensive experience with thermal stress problems in high-temperature metal heat exchangers and in ceramic components indicates that the probability of being able to obtain a ceramic heat exchanger for a closed-cycle gas turbine is so low that the funds allocated to this area should be very limited and the program should be monitored with particular

attention to the problems of thermal stress and tube vibration in high-temperature, high-performance heat exchangers.

The prospects for burning high-sulfur coal in a fluidized-bed coal combustion system coupled with industrial and institutional requirements for the cogeneration of heat and electricity provide strong incentives to expedite the construction and endurance testing of a fluidized-bed coal combustion system coupled to a closed-cycle gas turbine. This should conserve energy, reduce costs, and facilitate the use of high-ash, high-sulfur coal.

PRINCIPAL PROBLEMS AND PARAMETERS

There are many parameters that affect both the design choices and the operating problems characteristic of a closed-cycle gas turbine system. These range from items peculiar to the particular application through fundamentals of mechanical component design.

Relative Magnitude of Capital and Fuel Costs

It is clear from the record of the last 30 years that a closed-cycle gas turbine is of interest only if the cost of clean hydrocarbon fuel is high relative to the cost of a dirty fuel such as coal or some solid waste product, so that the high cost of the heat exchangers can be written off against the low fuel cost. Further, the record clearly shows that most closed-cycle gas turbines of the past have been used in applications where large amounts of heat at relatively low temperature are required, particularly where the ratio of low-temperature heat to electrical energy is 2 or more. As indicated in Fig. 2, the specific heat consumption for electric power production is definitely lower for the gas turbine than for extraction or back-pressure steam turbines if the ratio of the amount of heat required to electrical energy is less than about 3. Good data are not available on the relative capital costs of steam and gas turbines for such installations but, if one may judge from choices made in the past, it appears that the steam system has probably been the less expensive. The matter is obscured somewhat by

the fact that steam systems are more familiar to most plant design engineers and hence they are inclined to choose the steam units.

Combustion System

Until recently, emissions of SO_2 from a power plant were not a prime consideration in the plant design. However, the requirement that sulfur emissions be kept low coupled with the strong cost incentive to employ relatively high-sulfur coal now strongly favors the use of a fluidized-bed coal combustion system in which the bulk of the sulfur would be removed in the bed by reacting it with limestone to form calcium sulfate. In attempting to take advantage of this process, one finds that the design of a fluidized-bed combustion chamber presents a quite different set of problems than a furnace with pulverized coal burners or a traveling grate stoker. In particular, one finds that the basic heat transfer characteristics of fluidized beds cooled by steam boiler tubes make them very much more difficult to control than fluidized beds with gas-cooled tubes. This stems from the fact that the heat transfer coefficients in both water-cooled tubes and fluidized beds are not only quite high but are also essentially independent of the water and combustion gas velocities, so that, unless the bed depth is changed with load, reducing the flows of fuel and combustion air will lead to quenching of the bed and coke formation on the tubes.[22] This problem is avoided if a closed-cycle gas turbine rather than a steam generator is employed with a fluidized-bed coal combustion system. This is of special importance under startup, part-load, and shutdown conditions.

When designing a furnace for a closed-cycle gas turbine, one finds that the fluidized-bed coal combustion system has the additional advantage that there is no danger of a local hot spot leading to tube burnout as may be the case for a gas-cooled tube matrix heated with pulverized coal burners. Both this hot-spot problem and the bed quenching problem mentioned above represent very important although subtle advantages of the closed-cycle gas turbine relative to a steam turbine if the combustion system is to be a fluidized bed.

Turbine Inlet Temperature

As indicated in Fig. 4, increasing the turbine inlet temperature increases the thermal efficiency of the thermodynamic cycle, but it also increases the rate of oxidation and/or sulfidation attack of the heat exchanger tubes by combustion gases. The limited data available from corrosion tests in fluidized-bed coal combustion systems are not completely consistent, probably as a consequence of differences between operating conditions in the various tests. The indications seem to be that 300 series stainless steel alloys show the most promise.[22-25] The ORNL-FluiDyne tests and the BCURA tests seem to indicate that metal temperatures in the 1500 to 1600°F range will give acceptably long lives,[23,24] but the EPRI-sponsored tests at Stoke Orchard indicate that the metal operating temperature with these materials may be limited to a lower value.[25,26] A great deal of further test work will be required to resolve this vital question. Its importance cannot be overemphasized.

System Pressure

As the system pressure is increased, the size of components for closed-cycle gas turbines is reduced. This results in a reduction in cost up to the point where the thickness of casings and shells becomes awkwardly great and the thickness of exchanger tubes becomes sufficient so that the temperature drop through the tube wall becomes a major factor. In practice, a peak system pressure of 20 to 30 atm is usually favored except for large fission or fusion reactor heat sources, in which case pressures of 30 to 50 atm are commonly chosen. Note that Table 1 shows that all the systems that have been built make use of compressor inlet pressures between 7 and 10.2 atm. While not shown, the compressor pressure ratios commonly run between 3 and 4.

Ratio of Pumping Power to Heat Removal

The size and cost of components such as ducts and heat exchangers can be reduced by increasing the gas velocity and reducing the flow passage cross-sectional area. However, this leads to an increase in the

pressure drop and hence in the pumping losses. The problem is particularly important in the most vital component in the plant (i.e., the gas heater). Many different approaches to analyzing this question have been carried out with generally similar results; the pumping-power-to-heat-removal ratio for the heater is ordinarily kept below ∿2%.[18,27] This means that if the overall thermal efficiency of the plant is 33%, about 6% of the gross electrical output must go into the pumping power for the heater. In addition, of course, pressure losses in other components such as the ducts, recuperator, and cooler commonly increase the overall pumping power requirements to around 10% of the gross output.

Regenerator Effectiveness

To a first approximation, increasing the regenerator size for a given pumping-power-to-heat-removal ratio in the regenerator will increase the cycle efficiency by recovering a greater fraction of the heat in the turbine exhaust. However, as the ratio of the temperature rise in the air stream from the compressor to the temperature difference between the compressor outlet and the turbine outlet (i.e., the heating effectiveness) is increased, the size of the heat transfer matrix increases so that one reaches a point of diminishing returns because the capital cost of the regenerator increases rapidly with little increase in heat recovery. This effect is shown in Fig. 5, which was prepared for a gas-cooled reactor system.[18] Studies at both Escher-Wyss on plants such as those in Table 1 and studies at ORNL on closed-cycle gas turbines coupled to either nuclear reactors or fluidized-bed coal combustion chambers have indicated that a heating effectiveness of around 0.80 represents a good balance between capital costs and fuel costs as influenced by the thermal efficiency.[18]

Recuperator Effectiveness

The heat in the hot combustion gases leaving the heat transfer matrix of the turbine air heater can be utilized to good advantage by using

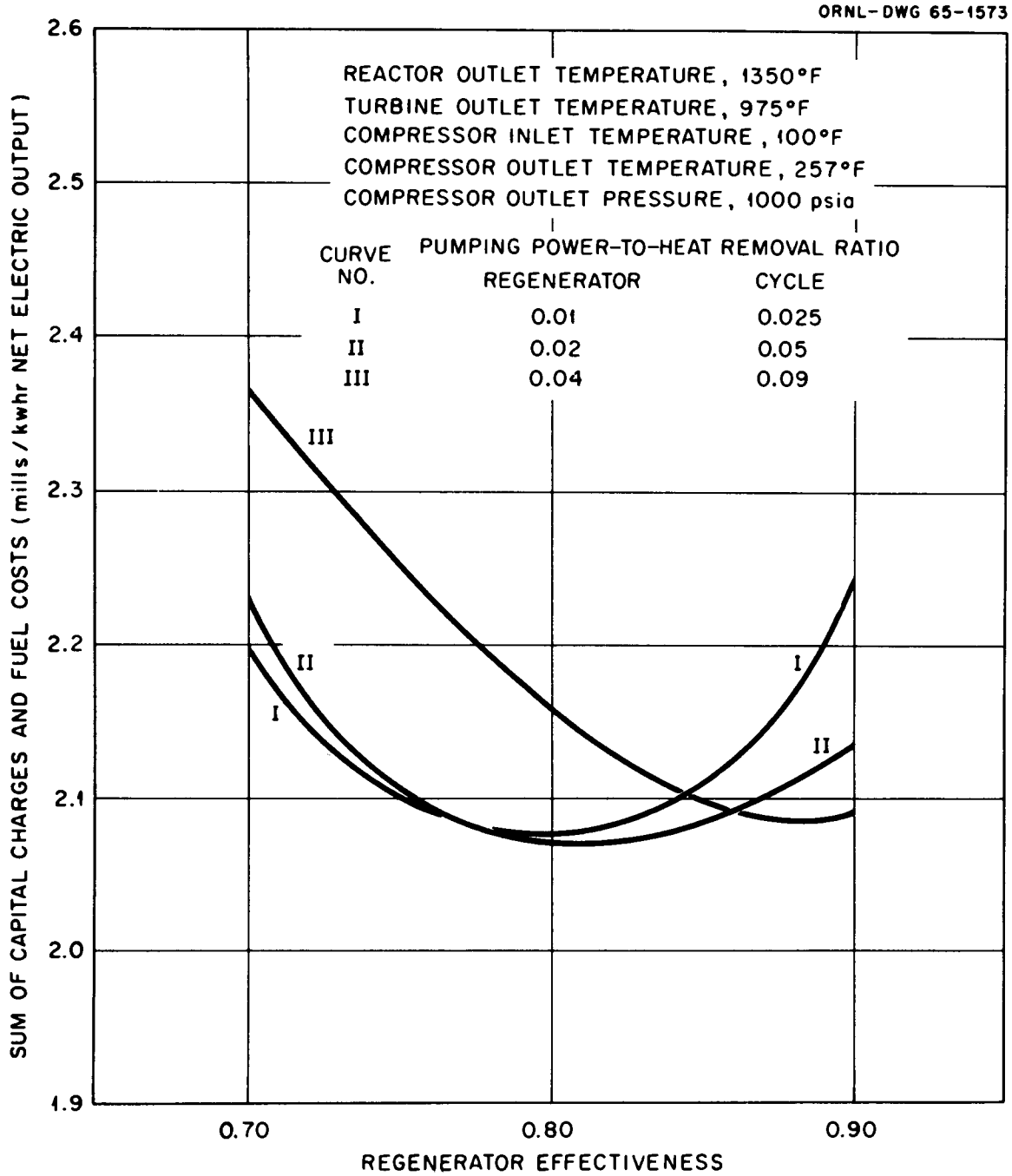

Fig. 5. Sum of capital charges and fuel, regenerator, and cooler costs as a function of regenerator effectiveness.

it to preheat the combustion air with a heat exchanger called a recuperator. Preheating the air also serves to improve the combustion efficiency. The pressure difference between the two fluid streams is small; hence a rotary recuperator similar to those employed in conventional steam plants can be used. As is the case for the regenerator, a good balance between heating effectiveness and capital costs is obtained with a heating effectiveness of ∿80%. Corrosion problems usually make it necessary to keep the stack gas temperature above 120°C (250°F); hence the latter is usually the design limitation rather than capital costs.

Choice of Working Fluid

Helium is commonly chosen in design studies as the working fluid for closed-cycle gas turbine systems. This is done primarily because the high thermal conductivity of helium coupled with its high specific heat make it a better heat transfer fluid than any other gas except for hydrogen. (Hydrogen has sometimes been considered but has never been used as a working fluid in a closed-cycle gas turbine because of the explosion hazard.) A major disadvantage of helium is its cost, which in turn poses a requirement for an exceptionally high degree of leak tightness throughout the system, a particularly troublesome problem with respect to the shaft seal which will be considered in the next section. Carbon dioxide and nitrogen are also often candidates, primarily because they — on the surface at least — appear to reduce the oxidation and corrosion problems. However, it has been found that iron-chrome-nickel alloys owe their high-temperature oxidation resistance to the formation of a dense, protective oxide film much like that of the oxide film on anodized aluminum. For these iron-chrome-nickel alloys, strongly oxidizing conditions are required not only to form this film initially but also to maintain it in the face of tendencies to form minute cracks with thermal strain cycling. As a consequence, it has been found that at temperatures above about 600°C, ordinary air is a more favorable environment for the iron-chrome-nickel alloys than is helium; hence there is really no incentive from the structural materials standpoint to use helium rather than air.[28]

The output of a closed-cycle gas turbine system is normally controlled by varying the system pressure. The most difficult control condition that must be met is the abrupt loss of load as a consequence of a circuit breaker trip. For this condition, the control problem is greatly eased if the working fluid can simply be vented to atmosphere, a step that presents no problem with air but would represent an important expense if helium were employed.

Helium has the advantage that it makes possible smaller turbine and compressor units, but the number of stages of these units is increased.[17] If an appreciable number of machines were produced, there would undoubtedly be an important cost savings. However, no such machines are in production and hence there is a strong incentive to employ air as a working fluid so that existing gas turbine machinery can be employed without carrying out a substantial design and development effort.

Shaft Seal

The shaft seal between the turbine and the generator presents some difficult problems, particularly if helium is employed. It is sobering to note that of the several different seal arrangements that have been employed in helium, nitrogen, and CO_2 gas-cooled reactor systems, a substantial percentage have encountered serious difficulty with shaft seal leakage. These instances have included oil leakage from the circulating blowers of the Calder Hall reactors, oil leakage into the nitrogen circuit of the Army package power reactor, oil leakage into the helium circuits of both the EBOR maritime reactor and Oberhausen helium turbine system, and water leakage through the blower shaft seal in the Fort St. Vrain helium-cooled reactor. Rather surprisingly, in only one of these systems was the instrumentation designed to detect such leakage before it became great enough to give serious trouble. Such instrumentation can and should be provided.

Ceramic Heaters

High-temperature heaters for a commercial power system of any type pose difficult and subtle problems. To keep costs down, fluid velocities

must be fairly high and hence tube vibration is often a problem. This is a particularly formidable condition in fluidized-bed coal combustion systems partly because of the high density of the fluidized bed and partly because the beds tend to pulsate.[29] Thus, the tubes must be strong and sturdily supported. At the same time, the design must be such as to accommodate differential thermal expansion between the tubes and the support structure, and this must accommodate not only temperature changes from a cold shutdown to the design output condition, but also the full range of possible off-design conditions to be encountered during startup or an abrupt shutdown. Further, the support system must accommodate irregularities in the flow and temperature distribution on both the working fluid side and in the fluidized bed. In practice, it has been found difficult to accommodate all these conditions in a heat exchanger built of a ductile metal that can tolerate local stresses well above the elastic limit for a limited number of cycles during the life of the equipment.[30]

Ceramics are brittle materials that fail abruptly once a critical stress is reached. Further, ceramic parts inherently always contain small defects that act as stress concentrations so that the stress for failure in a mechanical component is ordinarily about half that for good specimens. In fact, even in carefully prepared test specimens, one finds that the spread in the stress at which failure occurs will be such that the maximum stress at failure will be about double the minimum if a large number of specimens are tested.[31]

A consideration of fracture mechanics indicates that, first, one must expect macroscopic stress concentrations in regions in which the geometry changes (such as in the vicinity of header sheets) and these will be aggravated by microscopic stress concentrations in the form of slight defects and cracks associated with the fabrication process. The combined effect of these two factors will serve to increase local stresses by a factor of 5 to 10 even in a carefully designed joint. Once a crack starts in a brittle material, extensive experience indicates that it will progress rapidly if the pressure stresses are high, and shattering of the structure will result. But this is not all; the Occupational Safety and Health Act (OSHA) standards require that all

engineering structures withstand an earthquake, and provision for accommodating the shaking forces to be expected in an earthquake make it essential to employ a redundant structure with a multiplicity of restraints; these make it impossible to satisfy the thermal stress and strain requirements when consideration is given to the variety of off-design conditions that must be expected in transients in the course of emergencies or misoperation of the system. As a consequence, if there is a pressure differential between the gas turbine working fluid and the combustion chamber, there seems to be no way that one could design an all-ceramic heat exchanger that will satisfy all the real-life boundary conditions in a practical power plant and still be economically attractive.

These problems are treated at some length in a companion report on ceramic gas turbines.[21] Significantly, over $50,000,000 has been spent in the past 30 years on ceramic gas turbines, yet the amount of operating time that has been obtained has been almost nil. Experience with Pyrex and fused silica heat exchangers in chemical process work indicates that the problems of a high-performance, high-temperature ceramic heat exchanger subject to a large pressure differential are at least as formidable.

DEVELOPMENTAL STATUS

As can be seen in Table 1, 14 closed-cycle gas turbine plants have been built for commercial operation in Europe, the U.S.S.R., and Japan. All of these have been built to take advantage of a special fuel supply situation, and most of them supply both electricity and heat to chemical processes or district heating systems. Four of these plants have operated for 100,000 hr or more, thus indicating their high reliability. An excellent short summary of the principal design features and operating experience of each of these plants is presented in Ref. 4 and hence these foreign plants will not be discussed further here.

Army Package Power Plant

Three closed-cycle gas turbine systems were operated under the Army Package Power Plant Program.[12] Two of these were oil-fired; one system

in which the initial development was carried out was located at Ft. Belvoir, Virginia, and the second was tested at Aerojet in Azusa, California. A third unit was coupled to the air-cooled reactor designed and built by Aerojet, and the system was tested at the National Reactor Test Station in Idaho.

The turbines used in these systems were designed and built specifically for this application by the Stratos Division of Fairchild. As a consequence, the program had to include basic design and development work on a new model of gas turbine. The principal problems were associated with the bearings and shaft seals. Difficulty was experienced with oil leakage into the gas circuit for the closed-cycle gas turbine, but solutions to these problems were found and subsequent operations were satisfactory.

NASA Closed-Cycle Gas Turbine for Space Power Applications

NASA has had a modest continuing effort since about 1960 to develop a small closed-cycle gas turbine power plant suitable for use with an isotope or solar heat source. The prime objective in the program has been to determine whether such a system could be built to give the extremely high reliability required. This has entailed extensive endurance testing using an electric heat source.

The operating time on the NASA closed-cycle Brayton space power plant system has totaled 37,395 hr. Of this, 26,000 hr has been on the system operated originally at Plumbrook and later moved to Lewis Laboratory, where operation is continuing. The longest uninterrupted run with this system was 7200 hr, and that interruption was for equipment difficulties rather than the gas turbine itself. The unit has been run at a constant power of 6 to 7 kW with a turbine inlet temperature of 1600°F because it was designed to be coupled to an isotope heat source. As a consequence, the control system was designed to accommodate variations in spacecraft electrical power load by dissipating energy in an electric resistance grid.

Some 2600 hr of additional operating time was obtained with rotating units not incorporated into complete systems.

The only serious difficulty that has been experienced since going to all-welded systems to avoid gas leakage problems was a leak in the cooler which resulted in a silicone fluid getting into the inert gas working fluid. This led to the formation of carbides which precipitated, in particular, in the turbine inlet nozzle box and resulted in a reduction in the turbine air flow and thus a loss of power. On shutdown and disassembly, it was found that some of the carbide particles had gone through the gas bearings. These were built with three pads, the lower two of which were rigidly mounted in the casing while the upper one was spring-mounted. As a consequence, when the carbide particles went through the clearance between the journal and one of the lower pads, they scratched and scuffed the pad and journal; however, the shaft bucked against the spring-loaded upper bearing to force it upward and provide additional clearance, so that other than the residual scratches no serious trouble resulted from the particles going through the bearings.

ORNL Closed-Cycle Gas Turbine Coupled to a Fluidized-Bed Coal Combustion System

When it became apparent in 1973 that shortages of natural gas and fuel oil would soon make it desirable to shift to coal as the fuel for heating building complexes, ORNL carried out a study for Housing and Urban Development (HUD), and subsequently for HUD and the Office of Coal Research (OCR), to determine how coal might best be employed as the fuel for small total energy systems designed to supply both electricity and heat to building complexes.[6-8] Prime requirements included a high degree of reliability for semi-unattended operation to keep operating costs low, a capability for meeting EPA requirements while burning relatively high-sulfur coal, a high efficiency in utilizing the chemical energy in the fuel, and a minimal developmental program. The results of the study (phase I of the program) indicated that a closed-cycle gas turbine coupled to a fluidized-bed coal combustion chamber should meet these requirements including a high utilization of fuel energy over the wide load range characteristic of housing complexes because of diurnal fluctuations in requirements for both electricity and heat. Phase II has entailed the preparation of a firm design and estimate of the construction

costs.[20] Phase III, the detail design and construction of an experimental unit designed to give 325 kW(e) is under way at the time of writing. The program has been broadened so that the emphasis is now on the application of the concept to larger systems for industrial power and process heat applications.

Computer studies indicate that the dynamic response characteristics of the proposed system are excellent, including the ability to take a load trip and yet get back on the line within 60 sec.[32] The ratio of electrical to heat output can be varied over a wide range while maintaining an overall utilization of the chemical energy in the fuel between 70 and 80%. Experience with closed-cycle gas turbines indicates that a high reliability in the gas turbine system can be achieved; the principal reliability problems will lie in the coal feed and metering system. Bench tests of a full-scale set of coal feed and metering equipment have included a 1000-hr unattended endurance run that indicates that a high degree of reliability can also be obtained in this system.

The principal cause for concern in the developmental program is corrosion of the heater tubes by combustion gases. A 500-hr test of a set of alloy specimens in an atmospheric-pressure fluidized-bed coal combustion system at FluiDyne under the test conditions for the ORNL system has shown no significant oxidation or sulfidation attack of 300 series stainless steel or Incoloy 800, the principal candidates for the heater tubes.[23] Preliminary observations of specimens after further testing to a total of 4500 hr indicate little further attack.

ACKNOWLEDGMENT

Major contributions of material for use in this report were supplied by W. M. Crim, Jr., G. B. Manning, and C. A. Kinney of DOE (all three formerly of the Army Corps of Engineers), Lloyd Schurr and James Dunn of NASA Lewis Laboratories, and M. E. Lackey of ORNL. This help is deeply appreciated.

REFERENCES

1. A. P. Fraas and A. S. Thompson, *Research and Development Experience and Current Status of Development of Open-Cycle Gas Turbines*, ORNL/TM-6251 (to be published).

2. A. Stodola, "Load Tests of a 4000-kW Combustion-Turbine Set," *Power*, pp. 62–63 (February 1940).

3. C. Keller, "The Escher-Wyss Closed Cycle Turbine," *ASME Trans.* 68, 791 (1946).

4. R. A. Harmon, *Operational Status and Current Trends in Gas Turbines for Utility Applications in Europe*, Fossil Energy Organization of U.S. Energy Research and Development Administration, TIC-FE/WAPO-0016-1 (Aug. 16, 1976).

5. T. D. Anderson et al., *An Assessment of Industrial Energy Options Based on Coal and Nuclear Systems*, ORNL-4995 (July 1975).

6. *Use of Coal and Coal-Derived Fuels in Total Energy Systems for MIUS Applications*, Vol. 1, *Summary Report*, ORNL/HUD/MIUS-27 (April 1976).

7. A. P. Fraas, "Small Coal Burning Gas Turbine for Modular Integrated Utility Systems," paper presented at the 9th Intersociety Energy Conversion Engineering Conference, San Francisco, Calif., Aug. 26–30, 1974.

8. A. P. Fraas et al., "Design Study for a Coal-Fueled Closed Cycle Gas Turbine System for MIUS Applications," paper presented at the Tenth Intersociety Energy Conversion Engineering Conference, Newark, Del., Aug. 8–12, 1975.

9. D. Frei, "Gas Turbines for the Process Improvement of Industrial Thermal Power Plants," *Sulzer Technical Review*, April 1975.

10. A. P. Fraas, "Survey of Turbine Bucket Erosion, Deposits, and Corrosion," ASME Paper 75-GT-123, December 1974.

11. M. E. Lackey, *Summary of the Research and Development Effort on Direct Coal-Fired Gas Turbines*, ORNL/TM report (to be published).

12. W. M. Crim, Jr., J. R. Hoffmann, and G. B. Manning, "The Compact AK Process Nuclear System," *Trans. ASME* 88, 127 (1966).

13. Personal communication from W. M. Crim, Jr., ERDA-FE, to A. P. Fraas, May 19, 1977.

14. W. J. Brown, "Brayton-B Power System — A Progress Report," paper presented at the 4th Intersociety Energy Conversion Engineering Conference, Washington, D.C., Sept. 22–26, 1969.

15. Personal communication from Lloyd Schurr and James Dunn, NASA Lewis Lab., Apr. 27 and 29, 1977.

16. *State-of-the-Art of HTGR Gas Turbine Technology*, Gulf-GA-A12098 (June 1, 1973).

17. C. Keller and D. Schmidt, "Industrial Closed-Cycle Gas Turbines for Conventional and Nuclear Fuel," ASME Paper 67-GT-10, December 1966.

18. A. P. Fraas and M. N. Ozisik, *A Comparison of Gas-Turbine and Steam-Turbine Power Plants for Use with All-Ceramic Gas-Cooled Reactors*, ORNL-3209 (July 1965).

19. N. H. Coates, J. P. McGee, and J. W. Eckerd, "Bureau of Mines Program for Developing the Closed Cycle Gas Turbine," paper presented at the Advanced and High-Temperature Gas-Cooled Reactor Symposium, IAEA, Julich, Germany, Oct. 21–25, 1968.

20. A. P. Fraas, *Conceptual Design of a Coal-Fired Gas Turbine for MIUS Applications: Phase II Summary Report*, ORNL/TM report (to be published).

21. A. P. Fraas and W. M. Wells, *Summary of the Research and Development Effort on Ceramic Gas Turbines*, ORNL/TM-6255 (to be published).

22. A. P. Fraas, G. Samuels, and M. E. Lackey, "A New Approach to a Fluidized Bed Steam Boiler," ASME Paper 76-WA/Pwr-8, August 1976.

23. R. H. Cooper, *Preliminary Report on Corrosion Analysis of Heat Exchanger Tubes from a Fluidized-Bed Coal Combustor*, ORNL/TM report (to be published).

24. British Coal Utilization Research Association, *Research and Development Report No. 85*, prepared for the Office of Coal Research (September 1973).

25. J. Stringer, "High-Temperature Corrosion in Fluidized Bed Combustion," paper presented at the 1977 Engineering Foundation Conference on Ash Deposits and Corrosion Due to Impurities in Combustion Gases, New England College, Henniker, N.H., Hemisphere Publishing Co., to be published.

26. J. Stringer, "High-Temperature Corrosion of Metals and Alloys in Fluidized Bed Combustion Systems," *Proceedings of the International Conference on Fluidized Bed Combustion Systems*, Dec. 12–14, 1977, Washington, D.C., MITRE Corp., to be published.

27. A. P. Fraas, *Preliminary Designs for Four Integrated Gas-Cooled Ceramic-Fueled and Moderated Reactor Core and Steam Generator Units*, ORNL-2752 (November 1962).

28. J. H. DeVan, Chapter 7 of Ref. 6 above, Vol. 2.

29. A. S. Thompson and M. J. Cole, *Vibration and Thermal Stresses in the Tube Matrix of the Fluidized Bed Heat Exchanger*, ORNL/TM report (to be published).

30. A. P. Fraas, "Heat Exchangers for High Temperature Thermodynamic Cycles," ASME Paper 75-WA/HT-102, August 1975.

31. S. M. Wiederhorn and N. J. Tighe, "Application of Proof Testing to Silicon Nitride," *Proceedings of Workshop on Ceramics for Advanced Heat Engines*, ERDA Div. of Conservation of Research and Technology, Orlando, Fla., Jan. 24–26, 1977.

32. S. J. Ball, *Initial Simulation and Control System Studies of the MIUS Coal-Fired Gas Turbine Experiment*, ORNL/TM-5318, to be published.

ORNL/TM-6237
Dist. Category UC-90f

Internal Distribution

1. D. M. Eissenberg
2. E. C. Fox
3-7. A. P. Fraas (Consultant)
8. T. G. Godfrey
9. R. L. Graves
10. W. L. Greenstreet
11. E. C. Hise
12. R. S. Holcomb
13-15. J. E. Jones Jr.
16. M. E. Lackey
17. R. E. MacPherson
18-22. L. E. McNeese
23. W. R. Mixon
24. T. W. Pickel
25. T. W. Robinson, Jr.
26. M. W. Rosenthal
27. T. H. Row
28. G. Samuels
29. C. D. Scott
30. I. Spiewak
31. A. S. Thompson (Consultant)
32. H. E. Trammell
33. D. B. Trauger
34. G. P. Zimmerman
35. ORNL Patent Office
36. Central Research Library
37. Document Reference Section
38-39. Laboratory Records Department
40. Laboratory Records, RC

External Distribution

41. S. Alpert, EPRI, 3412 Hillview Ave., Palo Alto, Calif. 94304
42. D. H. Archer, Westinghouse Research Laboratory, 1310 Beulah Road, Pittsburgh, Pa. 15235
43. J. T. Bartis, Office of Plans & Technology Assessment, DOE, Fossil Energy, MS C-164, Germantown, Washington, D.C. 20545
44. D. H. Broadbent, National Coal Board (IEA Services Ltd.), 14/15 Lower Grosvenor Place, London, England
45. R. D. Brooks, General Electric Co., Energy Systems and Technology Division, Bldg. 2, Schenectady, N.Y. 12345
46. Robert Brookshire, Tennessee Valley Authority, 1360 Commerce Union Bank Bldg., Chattanooga, Tenn. 37401
47. John Byam, Morgantown Energy Technology Center, P.O. Box 880, Morgantown, W.Va. 26505
48. N. H. Coates, The Mitre Corp., Westgate Research Park, McLean, Va. 22101
49. A. Cohn, EPRI, 3412 Hillview Ave., Palo Alto, Calif. 94304
50. H. G. Corneil, Exxon Enterprises, Inc., 1251 Avenue of the Americas, New York, N.Y. 10020
51. Russell Covell, Combustion Engineering, Inc., 1000 Prospect Hill Road, Windsor, Conn. 06095
52. W. M. Crim, Office of Coal Utilization Systems, DOE, Fossil Energy, Mail Code E-178, Germantown, Washington, D.C. 20545
53. E. L. Daman, Foster Wheeler Corp., 110 S. Orange Ave., Livingston, N.J. 07039
54. C. W. DiBella, Department of Energy, Oak Ridge Operations, P.O. Box E, Oak Ridge, Tenn. 37830

55. Shelton Ehrlich, EPRI, 3412 Hillview Ave., P.O. Box 10412, Palo Alto, Calif. 94304
56. C. W. Elston, General Electric Co., Bldg. 273, 1 River Road, Schenectady, N.Y. 12345
57. John Eustis, Office of Industrial Programs, DOE, 1000 Independence Ave., Washington, D.C. 20545
58. H. L. Falkenberry, Coal Research Management, DOE, 1200 Pennsylvania Ave., N.W., Mail Code 3344, Washington, D.C. 20461
59. E. C. Feher, TRW, Mail Station 01/2270, 1 Space Park, Redondo Beach, Calif. 90278
60. T. J. Fitzgerald, Oregon State University, Chemical Engineering Department, Corvallis, Ore. 97331
61. R. W. Foster-Pegg, Westinghouse Electric Corp., Gas Turbine Engine Division, P.O. Box 251, Concordville, Penn. 19331
62. Steven Freedman, Office of Coal Utilization Systems, Fossil Energy, DOE, Mail Code E-178, Germantown, Washington, D.C. 20545
63. J. A. Fullam, Ingersoll-Rand Co., Process Compressor and Expanders, Turbo Products Division, Phillipsburg, N.J. 08865
64. F. D. Gmeindl, Morgantown Energy Technology Center, P.O. Box 880, Morgantown, W.Va. 26505
65. G. H. Goff, Research and Engineering, Bechtel Corp., 50 Beale St., San Francisco, Calif. 94119
66. Jerry Golden, Tennessee Valley Authority, Knoxville Office Complex, 400 Commerce Ave., W10A19, Knoxville, Tenn. 37902
67. W. B. Harrison, Southern Company Services, Inc., P.O. Box 2625, Birmingham, Ala. 35202
68. H. R. Hazard, Battelle Columbus Laboratories, 505 King Ave., Columbus Ohio 43201
69. T. A. Hetrick, Elliott Company, Jeannette, Pa. 15644
70. R. C. Hoke, Exxon Research and Engineering Co., P.O. Box 8, Linden, N.J. 07036
71. J. J. Horgan, United Technologies Corporation, P.O. Box 109, South Windsor, Conn. 06109
72. H. R. Hoy, Director, Leatherhead Laboratory, National Coal Board (BCURA, Ltd.), Randalls Road, Leatherhead, Surrey, England
73. Robert Jaffee, EPRI, 3412 Hillview Ave., Palo Alto, Calif. 94304
74. D. L. Keairns, Westinghouse Electric Corp., 1310 Beulah Road, Bldg. 501, Pittsburgh, Pa. 15235
75. Carey Kinney, Office of Coal Utilization Systems, Fossil Energy, DOE, Mail Code E-178, Germantown, Washington, D.C. 20545
76. C. W. Knudson, General Electric Co., Energy Systems and Technology Division, Bldg. 2, Schenectady, N.Y. 12345
77. L. R. Lawrence, Jr., Gas Research Institute, 3424 S. State St., Chicago, Ill. 60616
78. E. K. Levy, Lehigh University, Bldg. 9, Bethlehem, Pa. 18015
79. R. A. Loth, EPRI, 3412 Hillview Ave., Palo Alto, Calif. 94304
80. J. F. Louis, Massachusetts Institute of Technology, 77 Massachusetts Ave., Energy Laboratory, Room 31-254, Cambridge, Mass. 02139
81. T. E. Lund, EPRI, 3412 Hillview Ave., P.O. Box 10412, Palo Alto, Calif. 94304

82. J. J. Markowsky, American Electric Power, 2 Broadway, New York, N.Y. 10004
83. C. H. Marston, General Electric Company, 1 River Road, Schenectady, N.Y. 12345
84. M. J. Mayfield, Tennessee Valley Authority, 1020 Chestnut Street Tower-II, Chattanooga, Tenn. 37401
85. C. F. McDonald, General Atomic Co., P.O. Box 81608, San Diego, Calif. 92138
86. J. L. Morgan, General Electric Co., 1 River Road, Schenectady, N.Y. 12345
87. Seymour Moskowitz, Curtiss-Wright Corp., One Passaic Street, Wood-Ridge, N.J. 07075
88. Abolhassan Nazemi, The Mitre Corp./METREK Division, Westgate Research Park, McLean, Va. 22101
89. W. T. Newberry, Tennessee Valley Authority, 1020 Chestnut Street Tower-II, Chattanooga, Tenn. 37401
90. M. B. Neuworth, Mitre, 1820 Dolley Madison Blvd., McLean, Va. 22101
91. Kent Philips, Combustion Power Company, Inc., Memlo Park, Calif. 94025
92. Jim Powell, Brookhaven National Laboratory, Department of Applied Science, Upton, N.Y. 11973
93. Lynn Rubow, Gilbert Associates, P.O. Box 1498, Reading, Pa. 19603
94. L. I. Shure, NASA-Lewis Research Center, 21000 Brookpark Road, Cleveland, Ohio 44135
95. Lyle Six, AiResearch Mfg. Co., 402 South 36th Street, Phoenix, Ariz. 85034
96. J. W. Smith, Babcock and Wilcox, 20 South Van Buren Ave., Barberton, Ohio 44203
97. E. V. Somers, Westinghouse Electric Corp., Research and Development Center, Churchill Boro, Pittsburgh, Pa. 15235
98. A. M. Squires, Department of Chemical Engineering, Virginia Polytechnic Institute, Blacksburg, Va.
99. Beno Sternlicht, Mechanical Technology, Inc., 968 Albany Shaker Road, Latham, N.Y. 12110
100. R. H. Tourin, Program Director, New York State ERDA, 230 Park Ave., New York, N.Y. 10017
101. J. G. Vlahakis, Coal Liquefaction Division, Industrial & Utility Applications and Operations, DOE, Federal Building, 1200 Pennslyvania Ave., Washington, D.C. 20461
102. G. E. Voelker, Office of Coal Utilization Systems, Fossil Energy, DOE, Mail Code E-178, Germantown, Washington, D.C. 20545
103. J. F. Weinhold, Tennessee Valley Authority, 1345 Commerce Union Bank Bldg., Chattanooga, Tenn. 37401
104. G. C. Weth, Office of Coal Utilization Systems, Fossil Energy, DOE Mail Code E-178, Germantown, Washington, D.C. 20545
105. D. M. Willyoung, General Electric Co., 1 River Road, Schenectady, N.Y. 12345
106. H. W. Withers, Tennessee Valley Authority, 1020 Chestnut Street Tower-II, Chattanooga, Tenn. 37401
107. F. A. Zenz, F. A. Zenz, Inc., P.O. Box 205, Garrison, N.Y. 10524

108. W. Zimmerman, General Electric Co., Advanced Energy Program, Evendale, Ohio 45215
109. Office of Assistant Manager for Energy Research and Development, DOE, Oak Ridge Operations Office, Oak Ridge, Tenn. 37830
110-335. Given distribution as shown in DOE/TIC-4500 under category UC-90f

☆U.S. GOVERNMENT PRINTING OFFICE: 1981-740-062/87