LOCKHEED MARTIN ENERGY RESEARCH LIBRARIES
3 4456 0510961 9

ORNL-5748

ornl

OAK
RIDGE
NATIONAL
LABORATORY

UNION
CARBIDE

The Economic Foundations of Leap Model 22C

John A. Hansen
Martin Becker
John L. Trimble

OAK RIDGE NATIONAL LABORATORY
CENTRAL RESEARCH LIBRARY
CIRCULATION SECTION
4500N ROOM 175
LIBRARY LOAN COPY
DO NOT TRANSFER TO ANOTHER PERSON
If you wish someone else to see this report, send in name with report and the library will arrange a loan.
UCN-7969 (3 9-77)

OPERATED BY
UNION CARBIDE CORPORATION
FOR THE UNITED STATES
DEPARTMENT OF ENERGY

Printed in the United States of America. Available from
National Technical Information Service
U.S. Department of Commerce
5285 Port Royal Road, Springfield, Virginia 22161
NTIS price codes—Printed Copy: A07 Microfiche A01

This report was prepared as an account of work sponsored by an agency of the United States Government. Neither the United States Government nor any agency thereof, nor any of their employees, makes any warranty, express or implied, or assumes any legal liability or responsibility for the accuracy, completeness, or usefulness of any information, apparatus, product, or process disclosed, or represents that its use would not infringe privately owned rights. Reference herein to any specific commercial product, process, or service by trade name, trademark, manufacturer, or otherwise, does not necessarily constitute or imply its endorsement, recommendation, or favoring by the United States Government or any agency thereof. The views and opinions of authors expressed herein do not necessarily state or reflect those of the United States Government or any agency thereof.

ORNL-5748
Special

Contract No. W-7405-eng-26

THE ECONOMIC FOUNDATIONS OF LEAP MODEL 22C

John A. Hansen*
Martin Becker†
John L. Trimble

Energy Division
Economic Analysis Section

Date Published: April 1981

*Charles River Associates, Boston, Massachusetts 02116
†Rensselaer Polytechnic Institute, Troy, New York 12181

This Work Sponsored by
Department of Energy
Office of Energy Information Validation

OAK RIDGE NATIONAL LABORATORY
Oak Ridge, Tennessee 37830
Operated by
UNION CARBIDE CORPORATION
for the
DEPARTMENT OF ENERGY

LOCKHEED MARTIN ENERGY RESEARCH LIBRARIES

3 4456 0510961 9

TABLE OF CONTENTS

		Page
	ABSTRACT	vi
	EXECUTIVE SUMMARY	vii
1.	INTRODUCTION	1
	Background	1
	Method of Analysis	3
2.	AN OVERVIEW OF MODEL 22C	7
	A Review of LEAP Processes	7
	Tracing Model Energy Flows	11
	LEAP as a Supply/Demand Integrator	15
	Temporal Aggregation	20
	Overview Summary	20
3.	CONVERSION PROCESSES	21
	Assumptions	21
	Production in a Non-Declining Industry	27
	Pricing in a Non-Declining Industry	34
	Production and Pricing in a Declining Industry	36
	Technical Change	36
	Retrofitting of Existing Plant	39
	Electric Power Conversion Process	40
4.	RESOURCE EXTRACTION PROCESSES	45
5.	ALLOCATION PROCESSES	49
6.	GOVERNMENT REGULATIONS	55
7.	FINAL DEMAND PROCESS	59
	Price Insensitivity	60
	Lack of Cross Substitution: An Illustration with the Transportation Sector	61
8.	SOLUTION ALGORITHM	67
9.	MODEL DATA	69
	Overview	69
	Input Parameter Assessment	70
10.	CONCLUSION	85
	FOOTNOTES	87
	REFERENCES	89
	Appendix A. LEAP MODEL 22C RESOURCE EXTRACTION PROCESSES	A-1
	Appendix B. LEAP MODEL 22C CONVERSION PROCESSES	B-1

Page

Appendix C. LEAP MODEL 22C FINAL DEMAND PROCESSES AND SPECIFIC USES C-1

Appendix D. LEAP MODEL 22C ALLOCATION PROCESSES D-1

Appendix E. ENERGY FLOWS BETWEEN PROCESSES E-1

ACKNOWLEDGEMENTS

The authors appreciate the assistance provided by numerous individuals at the Department of Energy and Oak Ridge National Laboratory. In particular, special thanks go to Douglas R. Hale and Paul Werbos of the Department of Energy, to R. G. Alsmiller, Jr., Moshe Goldstein, Robert Peelle, C. R. Weisbin, and Leona Stewart of the Engineering Physics Division at Oak Ridge. Also, special thanks go to S. M. Cohn, K. R. Corum, L. J. Hill, H. D. Nguyen, R. D. Perlack, and C. R. Thomas of the Energy Division at Oak Ridge for assisting in the last minute effort to assess the input parameters. And special thanks go to Virginia Bolinger, Margie Leek, and Lillian Cochran for typing the manuscript.

ABSTRACT

The Department of Energy's Energy Information Administration (DOE/EIA) annually publishes energy future projections in its *Annual Report to Congress*. These projections, which are divided into short, mid-and long-term, are based on DOE/EIA energy-economy models. The model for long-term projections is the DOE/EIA's Long Term Energy Analysis Program (LEAP). This report identifies and presents an initial assessment of the major underlying economic assumptions of LEAP Model 22C, the version of LEAP used to prepare the 1978 *Annual Report to Congress*. The major assumptions of Model 22C are: competitive markets; constant input proportions in production processes; constant returns to scale in production processes; unlimited supplies of capital and variable inputs at fixed prices; continuous (infinitely divisible) units of input; investment based on perfect foresight; technical change limited to exogenous forecasts; minimal regional differences (except for coal production); unlimited supplies of foreign oil at exogenously specified prices; very little government regulation; and, final demand quantities which are essentially exogenously specified.

EXECUTIVE SUMMARY

This report reviews and critiques the economic structure of LEAP Model 22C's structure and implementation. It shows that many of LEAP's features seem to reveal a sophisticated understanding of the interactions of various elements of the energy/economy. The basic sectoral structure (aside from transportation), the treatment of economic rent, and modularity of the model are some of the elements which fall into this category. Many of the serious problems lie less with the LEAP framework than with the specific version 22c. Items of this type include the treatment of secondary energy flows, the function which gradually shuts down old plants, the lack of retrofitting, and the exogenous nature of final demand.

The report's principal findings are:

- Since capital goods markets are exogenous, the rising cost of energy needed to produce these goods is not included in the model. Consequently a bias towards capital intensive processes results.
- Since only one energy input is allowed for each production process the price escalation of secondary energy inputs is not modeled. The result is a bias in favor of those processes which actually do have significant secondary energy sources.
- A single energy input also prohibits dual fuel capabilities if investment is needed for fuel switching.
- The fixed coefficient production assumption is likely to introduce an upward bias to energy prices over time as relative input prices change.
- Input substitution does exist between processes. This, coupled with the fixed coefficient assumption, is likely to produce early and exaggerated swings between processes.
- Investments are made with perfect foresight. No attempt is made to model unexpected events or investment decisions under uncertainty.

- Since perfect competition and unlimited availability of capital at a fixed price are assumed, real world investment choices are not modeled. In LEAP Model 22C, it is unnecessary to order potential projects by profitability or to assess the optimal timing of investment expenditures.
- The plant shutdown mechanism gives rise to a theoretical inconsistency with the fixed coefficient assumption. Furthermore, this merchanism may also cause pricing in a declining industry to diverge from marginal cost.
- Little use is made of the capital and labor learning parameters. This behavior is in apparent conflict with available United States historical data.
- No allowance is made for retrofitting existing plant.
- While the resource process does contain a sophisticated treatment of economic rent, there are specification errors in the oil and gas sector. No provision is made for modeling the costs of associated or dissolved gas. The trade-off between production rate and total recoverable reserves is not modeled. Furthermore, model 22C makes no use of the reservoir depletion mechanism contained in the generic LEAP code.
- Electric power pricing is not based on marginal costs. This may be a case of the model implicitly modeling real world economic regulation. Other examples of implicit LEAP regulation exist as well.
- There is no provision in the electric power process for modeling the effect of shifting consumption patterns on the load duration curve.
- Allocation processes fail to account for the relationship of market shares and factors other than relative prices and certain sensitivity parameters. Factors such as dual fuel capability and shifts in the proportions of fixed and variable costs in relative prices are ignored.

- Output prices from allocation processes are weighted averages of input prices. This behavior seems to be justified in some cases and not in others.
- Final demand is essentially exogenous; model 22C includes price elasticities that are close to zero.
- Certain real world cross-elasticities between demand categories are also ignored.
- The model is heavily dependent on user-supplied input parameters, yet many key parameters have not been econometrically estimated and do not lend themselves to intuitive analysis.
- A quick assessment of the input parameters found 35 percent to be within reasonable bounds with most of the remaining 65 percent either being difficult to assess or needing further examination.

Some of the more serious difficulties in LEAP arise from the modelers' attempts to graft more realistic behavior onto the model without exercising sufficient care to ensure that the modified model is theoretically consistent. Examples of this practice include the gradual shutdown behavior of old plants (which is inconsistent with the fixed coefficient constant returns to scale production assumption), and the behavior of the allocation processes and the average cost pricing of electricity (which are inconsistent with the perfect competition or no government regulation assumption). While it is generally possible to calculate the direction of model bias due to specification errors (for example, fixed production coefficients in a dynamic framework tend to overestimate production costs), it is much more difficult to identify biases in a model which is internally inconsistent. For example, the shutdown mechanism in Equation 2 (given a small γ) implies that substitution possibilities exist in the investment period. It is difficult to discern the precise nature of the substitution possibilities, however, since the underlying cost function specifies fixed proportions.

Sprinkled throughout this report are numerous suggestions and recommendations. By far most of these fall in the "suggestion" category because

further research will be required to determine their usefulness.

Certain recommendations do spring directly from the report, however. The most important of these are:

- Final demands should be sensitive to energy price changes.
- Conversion processes should be capable of handling more than one energy input.
- Capital and labor markets should incorporate some supply elasticity.
- The resource process (particularly in oil and gas) should be closely examined in an effort to portray production more realistically.
- The electric power load curves should be tied to shifts in demands (at least for the electric car process).

One final note is in order. The LEAP code and data base were essentially frozen in June 1979 for Model 22C. The scope and content of the formal and informal documentation has changed since then and is likely to undergo future alterations as well. This report is based on currently available documentation (including the "oral tradition" passed down from ORNL staff members who have operated Model 22C).

THE ECONOMIC FOUNDATIONS OF LEAP MODEL 22C

1. INTRODUCTION

Background

The purpose of this report is to document and examine the major underlying economic assumptions of the Long-Term Energy Analysis Program (LEAP), a computer code model which resides with the Department of Energy's Energy Information Administration (DOE/EIA). This report has been prepared in conjunction with a larger body of reports aimed at assisting the DOE/EIA in evaluating the meaningfulness and accuracy of LEAP. DOE/EIA uses LEAP to prepare energy sector forecasts that it publishes in its *Annual Report to Congress*. Of particular concern in this report is the version of LEAP used in the preparation of forecasts for the 1978 *Annual Report to Congress* (ARC-78).

LEAP is a designation for a family of models that become specific models when the appropriate inputs are added. Several versions of LEAP have been used to simulate the performance of the energy sector of the U.S. economy and its interactions with other economic sectors over long periods (e.g., a 50-year time horizon). LEAP is best described as a family of models because it is relatively flexible as to level of aggregation, behavioral assumptions and constraints, and number and type of activities. Thus, there is a varied menu of LEAP characteristics from which the user may, in principle, select those which are most relevant to the decision or analysis at hand. An evaluation of one version of LEAP therefore cannot necessarily be readily transferred to a different LEAP model, though some aspects of an evaluation will be generic and therefore transferable to other versions.

The version of LEAP selected by EIA for guidance in the preparation of ARC-78 is called "22C." This report deals principally with model 22C, though other LEAP options will be mentioned to build a context that will help clarify the decision set from which model 22C was selected. It is important, however, to maintain a clear distinction between the assumptions

and capabilities of the generic LEAP model and those of any particular version of LEAP.

LEAP is based principally on two antecedent models, the Stanford Research Institute-Gulf Oil Corporation National Energy Model (SRI-GULF) and the Decision Focus, Inc. Energy-Economic Modeling System (DFI). These modeling systems share the same principal architect and are consequently similar in design. Because the documentation of the models that are related to LEAP is more thorough than that currently available for LEAP itself, individuals interested in pursuing a more detailed study of the model may find the following documents useful:

- Cazalet, E. G. *Generalized Equilibrium Modeling: The Methodology of the SRI-Gulf Model.* Palo Alto and Menlo Park, Calif.: Decision Focus, Inc. and Stanford Research Institute, 1977.
- SRI International. *Fuel and Energy Price Forecasts* (especially Vol. II). Prepared for the Electric Power Research Institute. Menlo Park, Calif.: SRI International, 1977.
- Adler, R. J. et al. *The DFI Generalized Equilibrium Modeling System* (GEMS). Palo Alto, Calif.: Decision Focus, Inc., 1979.

When EIA acquired LEAP, it made significant alterations in the model.

Consequently great care must be exercised in the application to LEAP of the documentation of these other models. Material from these sources should be used for general guidance only. Sources for this report include those mentioned above and Alsmiller et al. (1980) as well as the available LEAP documentation, but most of the concepts are drawn directly from discussions with engineers at the Oak Ridge National Laboratory (ORNL) who are quite familiar with the details of the computer code for version 22C. Some of the information that had to be obtained verbally for this report is now available in ancillary reports; see Goldstein (1981), Goldstein, Alsmiller, and Barish (1980), Stewart and Goldstein (1981) and Oblow (1980). In addition, Lee (1980) was helpful in understanding the conversion process activities in LEAP.

LEAP is an outgrowth of a modeling approach initially developed in connection with a particular application (synthetic fuel investment decisions),

though structured so that it could be adapted to a wider range of uses. Thus, the synthetic fuel technology side of the model is quite detailed while more conventional energy sources are less developed and nonenergy sectors receive very little treatment at all. Much of this emphasis is preserved in LEAP. Synthetic fuel production from coal is modeled in nine different processes that allow for differences in the type of coal used and thermal content of the energy produced. On the other hand, processes such as residential heat pumps and energy conserving technologies are omitted from model 22C altogether. In addition, capital, labor, foreign sector, and final demand variables are all exogenously specified. Consequently, while two of the model 22C outputs for any given period are synthetic fuel penetration and final industrial energy demand, the level of confidence placed in either of these estimates must clearly be guided by the greater detail of the model's synthetic fuel processes and the exogenous nature of the final demand processes.

Method of Analysis[1]

The main purpose of this report is to assist DOE/EIA in assessing the accuracy and meaningfulness of LEAP model 22C. In this context, the concepts of meaningfulness and accuracy are composed of three elements: that the model be internally consistent, that it be a close approximation of the actual behavior that it was intended to represent, and that it be fully documented. Operationally, an analysis of the model's meaningfulness and accuracy requires, at a minimum, the following pieces of information:

1. A list of all of the model's assumptions, premises, definitions, and axioms (i.e. its equations).
2. A description of the economic interpretation of the equations and variables and a listing of the data.
3. And a complete record of all tests of the model against the behavior it is intended to portray including a record of all optional modifications introduced for the purposes of policy simulation or sensitivity analyses.

This report is being prepared as a part of the first step in this process. Transparently, step 1 must be completed before step 2 and step 2 before step 3.

The goal of this report is to complete step 1 of the model evaluation procedure — to present a complete list of model assumptions and to check them for internal consistency as well as consistency with economic theory.

The principal sources of information for the preparation of this report were the LEAP FORTRAN computer code and the aforementioned Cazalet, SRI International, and Adler references. The information concerning the functioning of the computer code came from ORNL engineers (principally R. G. Alsmiller) who are intimately familiar with its operation. Furthermore, the report was reviewed by a number of individuals familiar with LEAP in order that it might be as accurate and complete a description of the model as is currently possible.

The intent of this report is not to provide an exposition and discussion of each model equation. That information is available elsewhere (Goldstein, Alsmiller, Barish; 1980). Instead, this report is designed to explain the salient features of the model's equations and structure to provide an understanding of the behavior that the model is intended to portray. Consequently, some of the equations in the following sections do not correspond identically to those in the report referenced above. In particular, there are two substantial deviations. First, this report principally discusses the production of a plant built in time period 0. Consequently, we are able to omit one of the time subscripts from each of the equations. This is done for simplicity; plants built in other periods behave in the same manner as plants built in period 0. Secondly, in this report we concentrate on the assumptions and behavior of the model during the 50-year modeling period. We recognize that LEAP has a structure for determining initial conditions (a pre-modeling period model) and terminal conditions (a post-modeling period model), but it was believed that the discussion would be clearer if we focused on the modeling period itself.

The following is a list of the principal economic assumptions of model 22C. These will be discussed and expanded on in the following sections:

- Competitive markets,
- Constant input proportions in each production process within each period,

- Constant returns to scale in production,
- Unlimited supplies of capital and variable inputs at fixed prices,
- Continuous (infinitely divisible) units of input,
- Investment based on perfect foresight,
- Limited technical change,
- Minimal regional differences (except for coal production),
- Unlimited supplies of foreign oil at exogenously specified prices,
- Very little government regulation,
- Final demand quantities which are essentially exogenously specified.

2. AN OVERVIEW OF MODEL 22C

Leap Model 22C is a large-scale national energy-economic model which traces flows of energy and economic information between markets and market participants. LEAP attempts to simulate competitive market processes through the interaction of postulated supply and demand functions. While it is based on a simple economic framework, LEAP includes various lags and partial adjustment parameters to capture the effects of complex real world systems.

LEAP version 22C is a large and complex model. It will be useful, therefore, to divide this overview into four sections. The first section deals with the institutional elements of the model. It provides an insight into the scope of production activities in the model, the types of resources and demands represented, and the level of detail or aggregation of the model sectors. The second section traces the energy flows between model processes showing each type of process and the manner in which it is employed in the modeling framework. It also delineates the types of energy flows that have been omitted from the model. The third section discusses the relationships between the economic variables contained in the various processes. It provides an overview of demand and supply formation and focuses on the interprocess information flows which equilibrate the model. The final section makes note of the level of temporal aggregation in version 22C.

A Review of LEAP Processes

Fundamentally, LEAP is designed to trace the flow of raw energy sources through cleaning and upgrading processes to satisfy final demands. In this section Model 22's basic activities will be discussed. It will simplify the analysis somewhat if some energy sources and processes are aggregated into more general groups. This aggregated, simplified version of the model is depicted in Table 1. Reduced to its bare elements, LEAP contains five energy sources, twelve types of intermediate processes, and nine types of end uses which satisfy nine final demands. The sources of energy consist of the three fossil fuels (coal, crude oil, and natural gas) plus uranium and a category that includes all nondepletable energy sources (such as solar, geothermal, and wind). While these raw forms of energy

Table 1. Processing energy to satisfy final demands in LEAP Model 22C

Primary Energy Sources	Intermediate Processes (Energy Input)	End-Use Activities (Energy Input)	Final Demand
1. Coal	1. Oil Refining (crude oil)	1. Industrial Heat (coal, gas, refined oil, electricity, nondepletables)	1. Direct and Indirect Heat for Industrial Use
	2. Uranium Enrichment (uranium)	2. Energy Feedstock (coal, gas, refined oil)	2. Coal, Gas, and Oil as Inputs to Nonenergy Processes
2. Natural Gas	3. High Btu Synthetic Gas (coal)	3. Electrical Services (electricity, non-depletables)	3. Lighting, Refrigeration, Machinery
	4. Medium-Low Btu Synthetic Gas (coal)	4. Heat (gas, refined oil, electricity, non-depletables)	4. Space and Water Heat
	5. Synthetic Crude Oil (coal)	5. Cooling (electricity nondepletables)	5. Space Cooling
3. Crude Oil	6. Boiler-Steam Generated Electricity (coal, refined oil, gas)	6. Cooking and Other (gas, electricity)	6. Cooking and Other Residential Appliances
	7. Combustion Turbine Generated Electricity (refined oil, gas)	7. Truck/Bus/Rail/Barge/ Other Transport	7. Vehicle-Miles and Freight Ton-Miles
4. Uranium	8. Nuclear Electric-Light Water Reactor (enriched uranium)	8. Aircraft/Military Transport	8. Aircraft/Military Vehicle-Miles
	9. Nuclear Electric-Fast Breeder Reactor (enriched uranium)	9. Automobile (refined oil, electricity)	9. Vehicle-Miles
	10. Fuel Cell Electricity (refined oil)		
5. Nondepletable Sources	11. Electricity from Nondepletable Sources (nondepletables)		
	12. Hydro-Electricity		

SOURCE: Condensed from Alsmiller, T. G., et al., *Interim Report on Model Evaluation Methodology and the Evaluation of LEAP*, Oak Ridge National Laboratory, Oak Ridge, Tennessee, 1980, pp. II-7-III-16.

may be employed directly in some end-use processes to satisfy final demands (as when natural gas is used for space heating), in other cases an intermediate step is required. Intermediate processes in model 22C consist of those which refine oil, enrich uranium, convert coal into synthetic gas and oil, and generate electricity. Table 1 lists nine basic types of final demands which are satisfied by using raw and processed energy in the model's end-use activities.

There are four principal types of processes in LEAP: resource extraction, conversion, final demand, and allocation. The first three of these activities can be read directly from Table 1.

Resource extraction processes are used to model the production of crude oil, natural gas, coal and uranium. A comprehensive list of these processes appears in Appendix A. Note that nondepletable energy resources (grouped to form the final item in the first column of Table 1) are not included in Appendix A as resource processes. Because the production of energy from these sources does not draw down a finite resource base, they are modeled as conversion processes rather than resource processes.

Conversion processes are used in version 22C to model most of the activities in the energy sector of the economy. They are typically used to convert one form of energy into another. All of the activities listed in the second and third columns of Table 1 represent model conversion processes (or aggregations of conversion processes). As noted above, conversion processes are also used to model the production of energy from nondepletable sources (solar, geothermal, wind, etc.). A comprehensive list of Model 22C conversion processes appears in Appendix B.

The final demand activities represented in the fourth column of Table 1 are essentially exogenously specified and ultimately determine the model's energy requirements. There are four broad demand categories in Model 22C: residential demand, commercial demand, industrial demand, and transportation demand. These four categories are then subdivided into specific demands similar to the aggregated listing in Table 1. A more detailed list of version 22C final demands is found in Appendix C.

In addition to the types of processes explicitly shown in Table 1, there is one additional process type, called an allocation process, that is implicitly contained in Table 1. Allocation processes are used whenever a single resource must be divided to flow in more than one direction or whenever two or more resources are competing to be used in a single activity. Thus, there are two types of allocation activities: multiple demander processes and multiple supplier processes.

In Table 1, note that coal is used as an input to several conversion processes (synthetic fuels, electricity generation, industrial heat, etc.). Hence, a multiple demander allocation process determines the quantities (but not price) of coal that will be used in each of these processes; demanders take the supplier's price. Table 1 also shows that different energy types may be used to produce industrial process heat, including oil, gas, and coal. Here a multiple supplier allocation process determines the quantity of industrial heat that will be produced from each resource. Appendix D lists all of the allocation processes in Model 22C and briefly describes their functions.

Thus there are only four basic activity types in the model: resource processes, conversion processes, allocation processes, and final demand processes. Variants of these four basic types of activities, however, do occasionally appear. For example, electrical conversion processes are modeled somewhat differently than other conversion processes because of the nonstorable nature of electricity. A second variation occurs in the resource extraction processes, where coal and uranium are modeled using a process which is differentiated from that used for oil and gas because of basic differences in the depletion assumptions. These variations will be discussed in more depth in the sections describing the basic processes.

Other processes serve to simply reflect real world markups in the distribution of energy and other goods. For example, some allocation processes contain a mechanism that accounts for the differential energy costs to different sectors of the economy (e.g., the price of electricity to residences is higher than for industrial customers). Similarly, there are transportation processes which merely contain price markups due to the costs of moving energy from place to place.

Tracing Model Energy Flows

Having reviewed the basic types of activities in LEAP, the nature of the flows of energy between activities in Model 22C becomes clearer if a small portion of the model is segregated and scrutinized. Figure 1 is a sample block diagram drawn and condensed from Model 22C which traces the flow of energy from coal mining through several industrial uses. In addition to showing the connections between processes, Figure 1 will also be used to demonstrate the types of energy/economic flows that are accounted for in the 22C model and the types that are suppressed. In the diagram, squares represent conversion processes and circles represent allocation processes. Resource extraction and final demand are represented by trapazoids.

Mid-continent coal is mined in Step 1 and goes to an allocation step (2), where the required quantity of mid-continent coal is determined based on its price, the price of other coals, and the overall demand for coal. Another allocation step follows in which coal is allocated to low-medium Btu gasification to produce electricity (4), coal boiler-produced electricity (5), industrial indirect heat (6), and many other uses. The relative quantities of electricity produced by the various processes are determined on the basis of their relative prices in allocation Step 7. Electricity will directly satisfy some industrial demands; in addition, it may be used in an electric heat pump conversion process (9) to produce indirect industrial heat. Indirect industrial heat may be produced from coal as well as electricity; the relative quantities of these and other sources are determined in Step 10. Ultimately, indirect heat and other energy sources satisfy industrial demand (11).

Appendix E consists of a series of charts which display all energy flows in the model. A careful tracing of the flow of a few energy types from resource extraction to final demand will serve as an aid to understanding the nature of Model 22C.

Figure 2a is a simplified version of Figure 1. It shows the energy flows between the coal production, synthetic gas production, electricity production, and final industrial demand processes in Model 22C. There are many interprocess flows, however, which are ignored in the model. Coal gas production, for example, requires electricity and industrial outputs

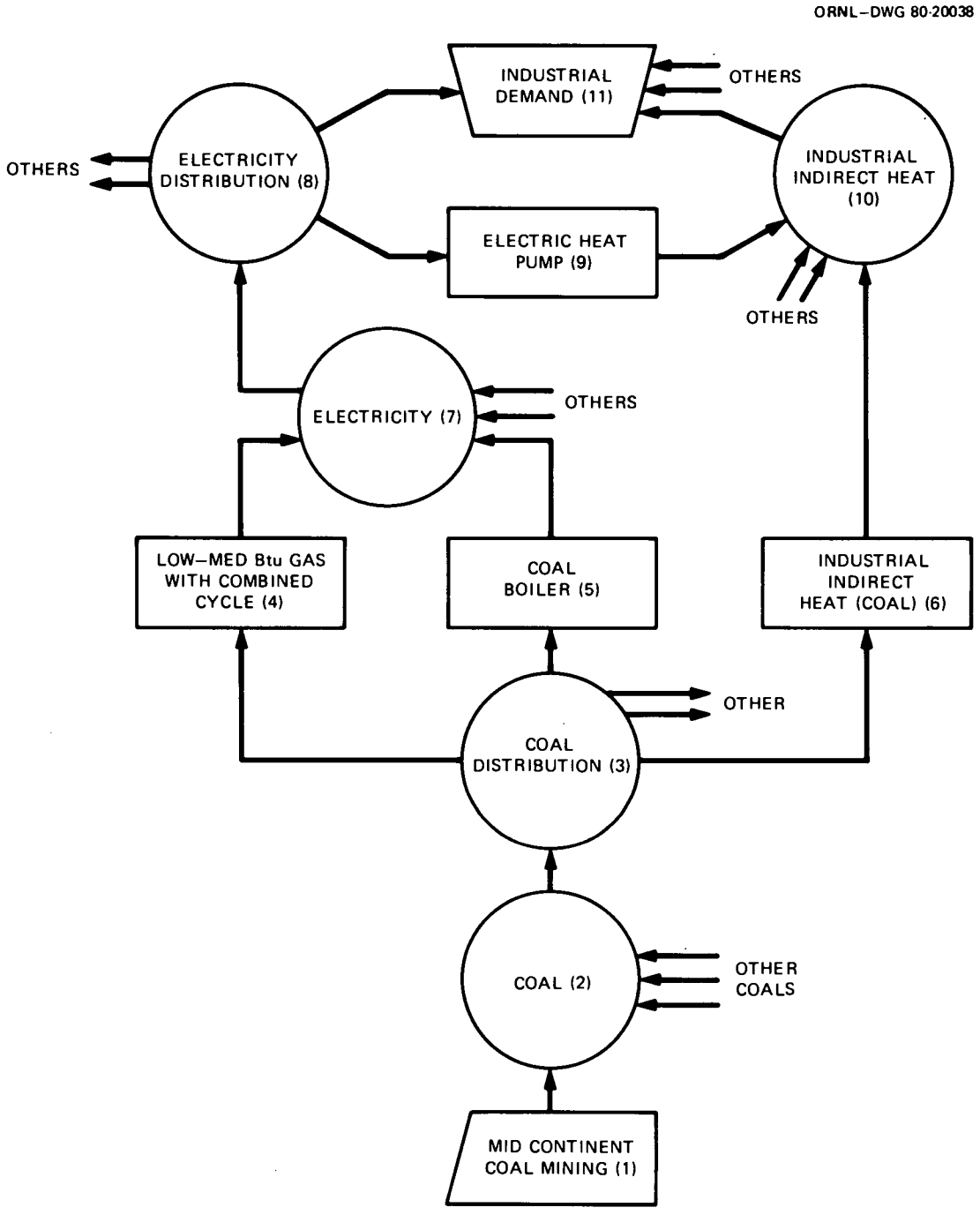

Fig. 1. Energy flows from coal mining to industrial demand

ORNL–DWG 80-20037

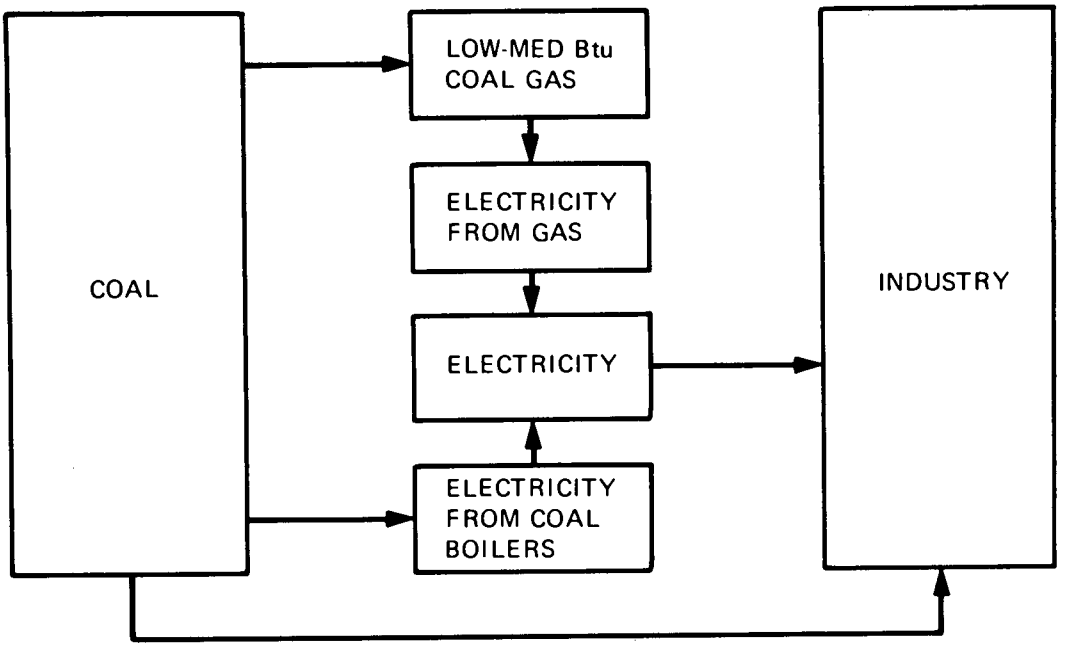

FIG. 2a. LEAP MODEL 22C

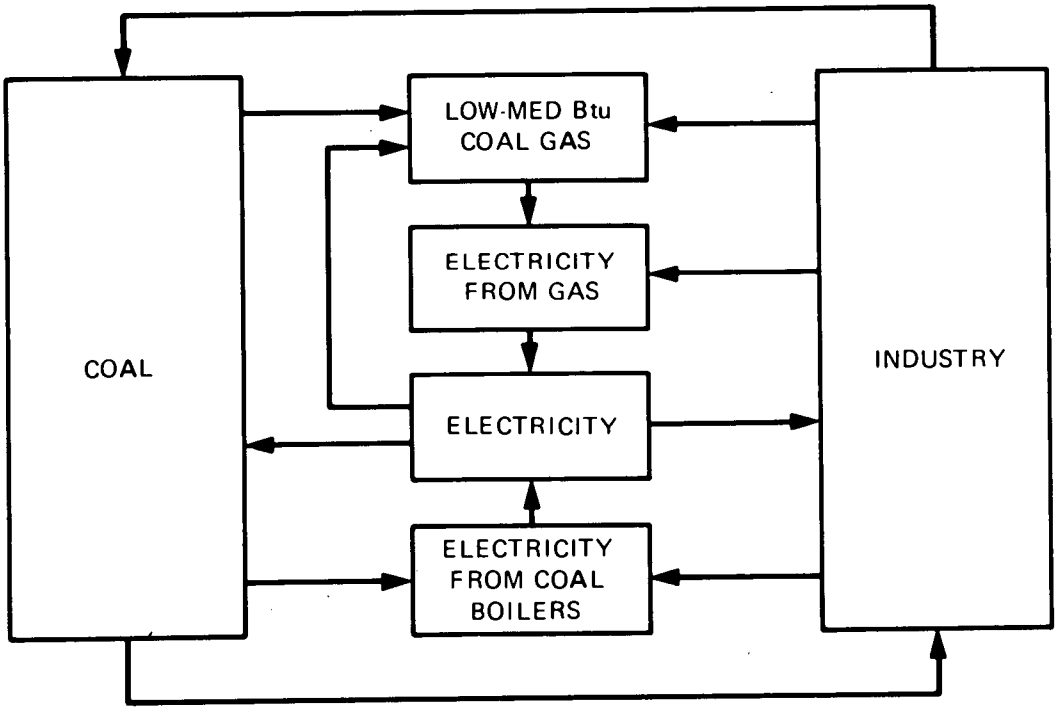

FIG. 2b. INPUT/OUTPUT MODEL

(e.g. steel) in addition to coal. Likewise, coal production requires industrial outputs and electricity. These omissions are corrected in Figure 2b. Figure 2b is based on the same production processes as Figure 2a, but accounts for all of the energy flows between activities.

The difference between Figures 2a and 2b is more than a trivial distinction. The specification in Figure 2a introduces a bias toward more capital-intensive production processes. In Model 22C the cost of capital is exogenously fixed and constant; in particular, the price of industrial goods used as an input to energy production processes does not rise as the energy costs of producing those units of capital increase. Consequently, as the price of energy rises, units of capital will appear in the model to be less expensive than they really are. This will bias the model's results toward more capital-intensive processes.

In addition, the modeling scheme in Figure 2a allows only one energy input for each process. This specification ignores the large quantities of secondary energy inputs which are essential to some processes. A recent study sponsored by the Department of Energy (Badger Plants, Inc., 1978), for example, concluded that a 400,000 barrel per day coal methanol plant would require more than 6.5 million kilowatt hours of electricity per day in excess of that generated internally (enough to serve the residential needs of a medium-sized city). Treating this secondary energy input as a part of the labor/materials input (which has an exogenously fixed price) will tend to bias the model's results in favor of those processes which require multiple energy sources, since the secondary sources are underpriced. Thus, for example, to the extent that oil production from wells requires less electricity than the production of synthetic crude, it would be expected that the model would shift to the synthetic fuel at a relatively early date, due to the undervaluation of the electricity input.

These biases in Model 22C can be eliminated without major alterations of the basic model framework. The LEAP structure itself incorporates provisions for several energy inputs; the decision to use only one was made by the version 22C designers. This problem has been corrected in

the version of LEAP used to produce the EIA Annual Report to Congress for 1979.

There are a number of possible ways to treat capital and labor inputs in large-scale energy/economic models such as LEAP. Hudson and Jorgensen (1974), for example, use a macroeconomic growth model to determine factor prices over time. The predicted values of the growth model are then used as inputs to the energy model. While it is possible that a similar procedure could be used in LEAP by linking the model to any of a number of macroeconomic models, this procedure would be expensive. It would also be unnecessary. Since the purpose of modeling labor and capital markets would not be to predict the detailed behavior of those markets but rather to estimate their constraining effects on the energy sector, it should suffice to merely incorporate long- and short-run price elasticities into the capital and labor supply functions.

LEAP as a Supply/Demand Integrator

The previous sections have presented an overview of the basic elements of LEAP's structure and discussion of resource flows in the model. This section will summarize the interprocess relationships between economic variables in LEAP.

Figure 3 depicts the method by which the values of most LEAP price and quantity variables are determined. In this simplified representation, oil is the only energy resource; it is available through a domestic resource extraction and refining process or it may be imported. Electricity is the only final demand in the model; electric power may be produced from oil either through the use of an oil combustion turbine or through a fuel cell process. Figure 3 is a simplification not only because of its single energy type and limitation to two conversion processes, but also because it is a single time period model. Part of the complexity of LEAP is that it is a 10-period model (each period represents five years) which solves simultaneously for all variables in all time periods. It will be useful, therefore, to employ a simplified single-period version of LEAP to clarify the underlying processes.

ORNL-DWG 80-20036

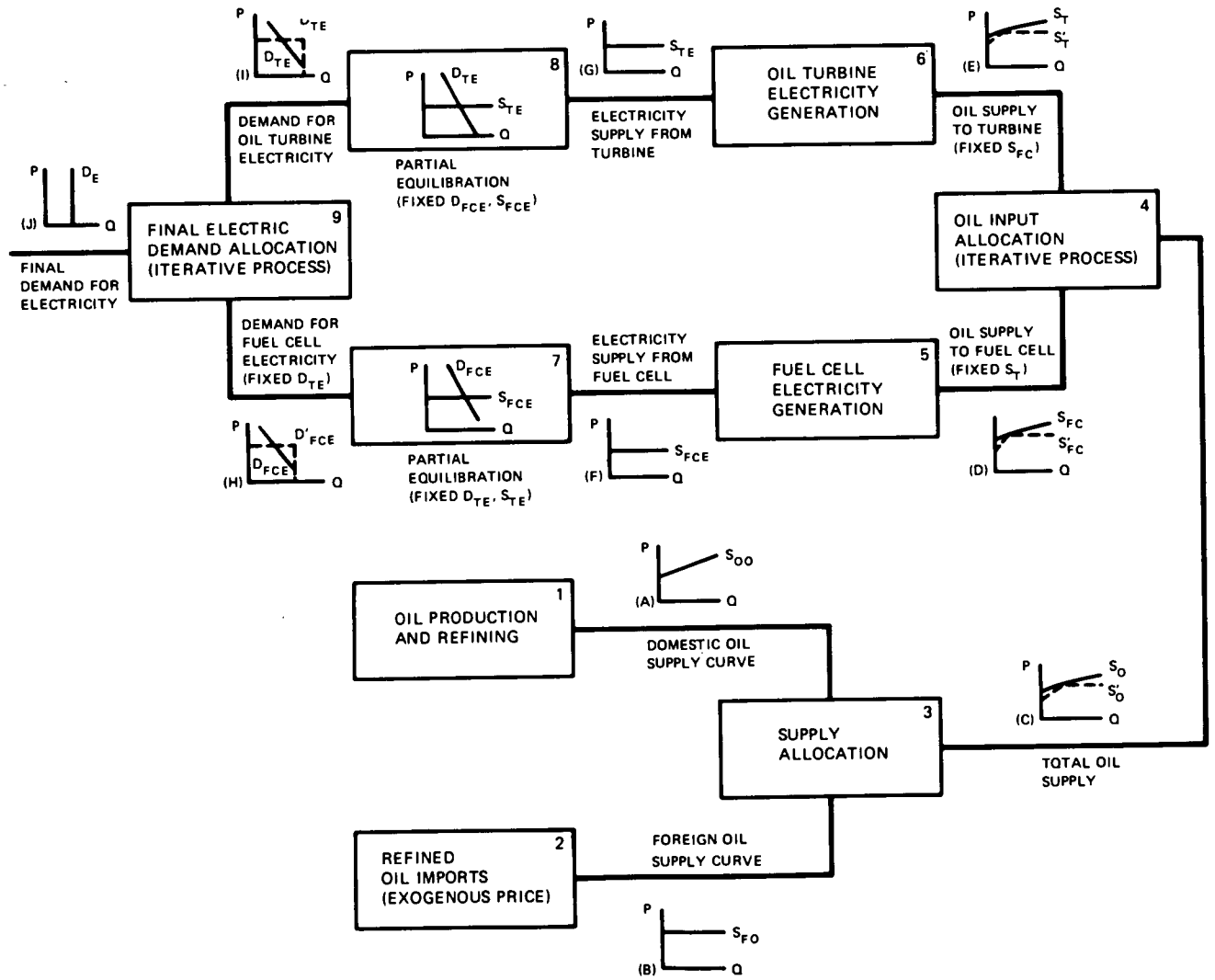

Fig. 3. Determination of prices and quantities in a simple LEAP model

In Figure 3 the boxes that refer to model processes are identified by numbers and the graphs that represent economic relationships are identified by letters. Graphs A and B show the supply curves of refined oil from domestic (1) and foreign (2) sources. The foreign oil supply curve is horizontal because LEAP version 22C assumes an unlimited quantity of foreign oil to be available at a fixed price. Graph C shows the total supply curve for refined oil. If markets adjusted instantaneously, the oil supply curve would be portrayed by the dotted line in Graph C, labeled S_0. That line shows no oil imports as long as the domestic price is below the foreign price. Once the domestic price rises above the foreign price, however, all additional units of oil are purchased from foreign suppliers. LEAP's drafters recognized that market adjustments do not occur instantaneously. Consequently, some foreign oil is purchased when domestic prices are relatively low and some additional units of domestic oil are purchased even when they are more expensive than foreign units. This behavior gives rise to supply curve S_0' in Graph C which more accurately portrays a smoother transition from domestic to foreign supplies.

Oil is used as an input to the fuel cell and combustion turbine electric power generation processes (boxes 5 and 6, respectively). If the oil input to one of the processes is held constant, an input supply curve for the other process may be derived. Figure 4 depicts the input supply curve for the combustion turbine process given various levels of fuel cell operation. For example, when the quantity of oil used as an input to the fuel cell (Q_{FC}^{I}) is set equal to zero, the total oil supply curve becomes the input supply curve for the combustion turbine process (S_T). If, however, the fuel cell process produces at a level requiring Q_T units of oil input, this amount must be subtracted from the supply available to the turbine process. This produces supply curve S_T', in which the first unit available to the turbine process costs as much as the last unit used by the fuel cell process. Similarly, if the fuel cell process uses Q_2 units of oil, the turbine input supply curve becomes S_T''.

The other inputs to the conversion processes (capital, labor/materials) have fixed exogenous prices. Consequently, given these input supply curves

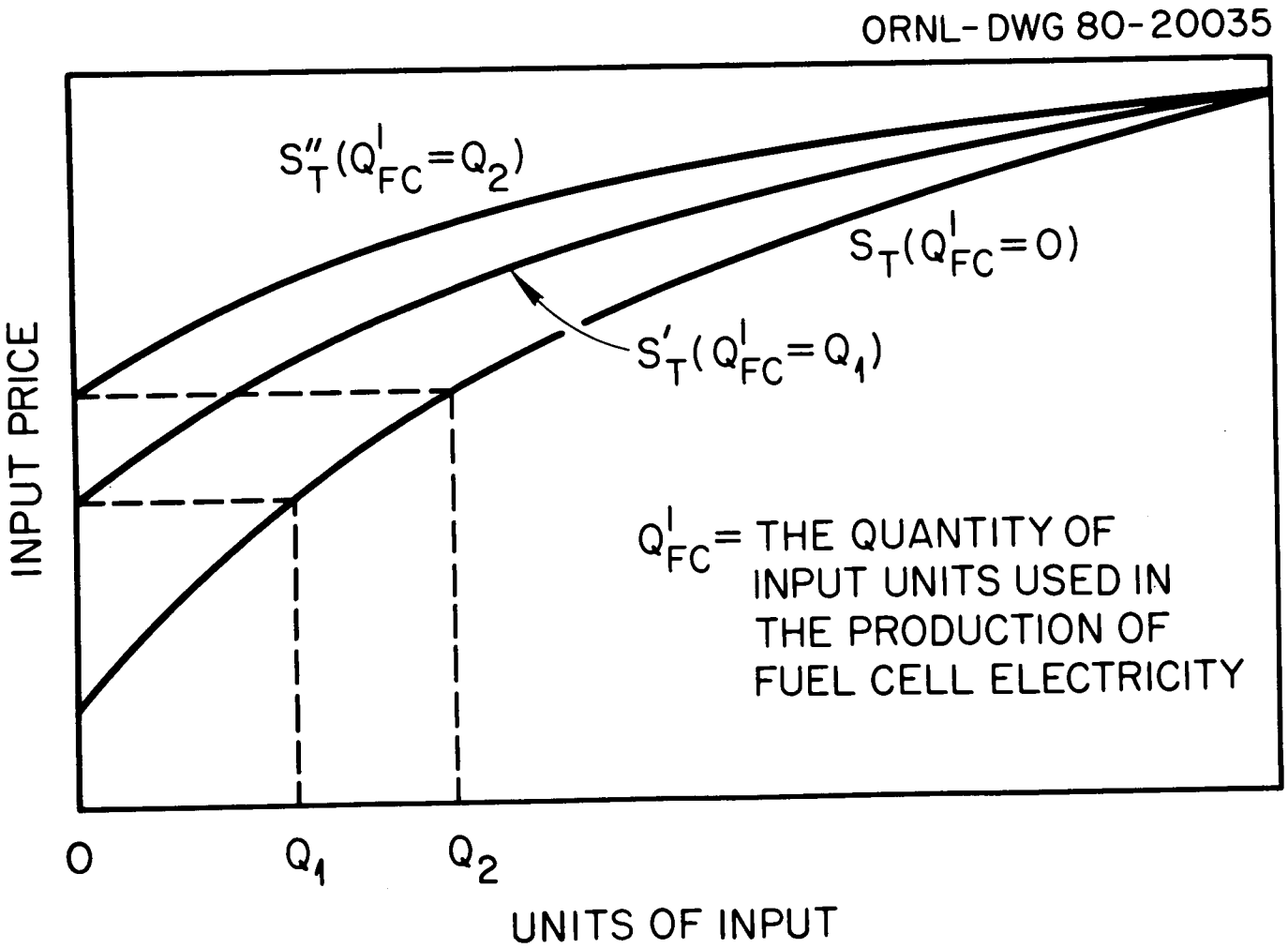

Fig. 4. Combustion turbine input curves given various levels of fuel cell operation

and a set of conversion process input/output coefficients, it is possible to derive an output supply curve for each conversion process.[2] These are portrayed in Graphs F and G.

Moving now to the determination and allocation of demand (Block 9, Graph J), it should be noted that in LEAP version 22C, demand is essentially fixed without reference to price.[3] Thus, the final demand for electricity in Graph J is a vertical line. This does not mean that the demand curve facing each individual conversion processes is insensitive to price, however. If, for example, the price of combustion turbine generated electricity rises relative to that produced by fuel cells, the quantity demanded from the fuel cell process will rise.

If markets adjusted instantaneously and conversion processes produced a homogeneous good, the response of demand to price would result in a discontinuous vertical demand curve (D_{TE} and D_{FCE} in Graphs I and H). As the costs of production in one of the processes rose, that process would retain a 100 percent market share until its price rose above that of the competitive process. At that point its share would fall to zero as demand shifted toward the less expensive supply source. In the real world this behavior is rarely seen because markets do not adjust instantaneously and production process outputs are rarely homogeneous. These factors give rise to the downward sloping demand curves D_{TE} and D_{FCE} in (H) and (I). As in the case of the process supply curves, these demand curves are related; the demand curve for turbine process electricity, for example, is drawn given a fixed price for fuel cell electricity.

Supply and demand are initially equilibrated in Blocks 7 and 8. These equilibria are not necessarily general model solutions, however, because the supply and demand curves for each process are based on hypothesized curves for the other process. To demonstrate that these equilibria are a general model solution, it is necessary to be certain that the assumed prices and quantities are the equilibrium values. This requires an iterative process. Trial prices and quantities are assumed; then adjustments are systematically made in the assumed values until a general model equilibrium is found. It is the need to solve for the prices and quantities of all

processes in all time periods simultaneously by an iterative process that causes the computation costs of models such as LEAP to be quite high. Solving Model 22C, for example, requires about three quarters of one hour of CPU time on an IBM 360/168 computer.

Temporal Aggregation

LEAP Model 22C has a five-year unit of account. Its quantities are point samplings or "snapshots" of quantity paths at five-year intervals. More specifically, Model 22C's quantities are one-year totals occurring every five years. Some of its inputs, for instance, are based on annual data [e.g., the Hirst and Jackson models; see Hirst and Carney (1978), Jackson et al. (1978), and Stewart and Goldstein (1981)]. The five-year unit of account offers an advantage over (say) an annual unit of account because it allows simplifications that assist in making the model more tractable and because it focuses the model naturally on the more salient features of long-run variation. A disadvantage of aggregating over time is that desirable short-run information may be lost. In interpreting the output of LEAP, therefore, it is important to be conscious of its time aggregation.

Overview Summary

This section has introduced the types of activities contained in LEAP and the flows of energy and economic data between these activities. The next five sections will offer a deeper investigation into the properties of these four process types, including a discussion on the implications of government regulation. The final sections will consider Model 22C parameter specifications and the algorithm used to solve LEAP.

3. CONVERSION PROCESSES

Assumptions

The conversion process is the mechanism used to model most production activity in model 22C. Inputs to each conversion process consist of capital, energy (feedstock), and labor/materials. A few conversion processes (e.g., solar heat, geothermal, central renewables) have no energy input since they are nondepletable resource extraction processes which require no feedstock. The conversion process is the most important type of activity in model 22C. Of the 150 activities in this model version, 63 are conversion processes. In addition, the resource extraction process is much akin to the conversion process. Hence, technology is modeled in much the same way in nearly all processes.

The economic assumptions that underlie the model 22C conversion processes and which are based on the authors' inferences follow:

1. Profit-maximizing producers;
2. Fixed coefficient production; no within-process capital/labor substitution;
3. Constant returns to scale;
4. Availability of infinite quantities of capital and labor/materials inputs at exogenously fixed prices;
5. Perfect foresight investment;
6. No within process technical change except that which acts through thermal efficiencies;[4]
7. Perfectly divisible capital stock;
8. Perfectly competitive markets; and
9. No explicit governmental regulation of economic activity.

Each of these assumptions deserves some comment. First, firms are assumed to maximize long-run profits. They invest (and produce) up to the point where the price of an incremental unit of capital is just equal to the net present value of the stream of output of that unit of capital over the lifetime of the capital asset. Note that this assumption implicitly requires that capital assets be infinitely divisible; any lumpiness in units of capacity would make it impossible to ensure that the asset's value was precisely equal to the present value of the stream of income.

The fixed coefficient production assumption is crucial to the model 22C. Fixed coefficient production employs inputs only in a particular combination to produce units of output. Production then becomes similar to a cookbook recipe requiring particular quantities of ingredients to produce a finished product. Just as it is not possible to substitute an egg for flour in a cake recipe, it is not possible to substitute additional capital units for units of coal in the production of electricity. LEAP does allow substitution across processes; discussion of that is deferred until later in this section.

Fixed coefficient production functions are too inflexible to represent the behavior of the real world economy. For example, in many production processes it is possible to add insulation (a capital expense) to reduce the quantity of energy required. Similarly, in many processes it is possible to replace the functions of some workers (labor/materials) by machines (capital). This behavior, termed "input substitution," occurs in response to input price changes. Abundant (cheap) inputs are substituted for scarce (expensive) inputs in order to produce the same output at a lower cost than would be possible under fixed coefficient production.

In model 22C, input substitution is not permitted. When contemplating a capital investment, a producer knows that a certain number of units of each input will be required to produce a given unit of output regardless of the relative input prices. While it is true that certain aging and technical change factors (discussed below) cause the ratio of units of variable input to units of output to change over time, this does not constitute input substitution in the usual sense because it is not a response to changing input prices. Instead, it should be viewed as a systematic change in the production "recipe" over time.

While input substitution does not occur within conversion processes in model 22C, it does occur on a broader level, since substitution between conversion processes does occur. For example, if the price of oil rises relative to that of coal, electricity production will tend to shift toward coal-based technologies and away from those which are oil-based. This will result in the displacement of oil by coal: precisely the behavior that would be predicted by a model incorporating input substitution. This sort of technology, where production coefficients are fixed in the short run but broader

substitution possibilities exist in the longer run, is often called a "putty-clay" technology by economists.

The model's specification that there are no substitution possibilities between inputs will generally lead to biased results. This bias will appear in two forms. First, to the extent that actual technology permits firms to adapt their production processes to changes in relative input prices, production costs will be overstated by the LEAP fixed coefficients specification. Stated differently, that combination of inputs specified in LEAP is one which is available to real world firms, but in addition, those firms will generally have other input combinations from which they may select an optimum. Consequently, they will choose the LEAP input coefficients only if that selection results in the lowest possible production cost. The cost of production will, therefore, be at least as low as that resulting from LEAP and probably lower (due to changes in relative input prices).

Secondly, LEAP's combination of a fixed coefficient technology and its ability to shift production from one process to another is likely to bias the model's output toward exaggerated swings between processes. For example, if the price of coal and oil rise relative to the price of uranium, LEAP will cause electricity production to shift from a fossil-fuel-based to a nuclear-based technology. To the extent that current coal and oil equipment can be replaced with more efficient equipment using the same fuel, this shift will actually occur more slowly than predicted by LEAP.

In summary, LEAP's fixed coefficients production specification will over estimate production costs and underestimate utilization of those production technologies experiencing the most rapid increases in input energy costs. The significance of this bias depends on a number of factors, most importantly, the amount of input substitution available in the real world production, and the number of production options explicitly modeled.

With regard to the first point, examples presented above indicated that input substitution is possible in certain kinds of production processes. Other processes, however, seem to fit more appropriately into the fixed coefficients model. Economists refer to the relative ease with which production inputs may be substituted for each other as the elasticity of sub-

stitution, denoted σ. An elasticity of substitution equal to zero corresponds to the fixed coefficients case. A positive σ implies an ability to substitute between inputs, with larger numbers indicating relatively greater substitution possibilities. A negative σ implies complementary production inputs. Substitution elasticities generally change with plant scale.

Since the elasticity of substitution will differ between production processes and will vary even within a given production process as output is changed, a production function that selects a single elasticity coefficient (zero in the case of LEAP) cannot possibly represent the range of technologies that actually exist. The alternative, however, is to attempt to estimate the elasticity coefficients for each of the production processes at each output level. This option would dramatically increase the data requirements of the model and result in a corollary increase in cost. Consequently, economists have been inclined to aggregate estimates of substitution elasticities for broad sectors of the economy or for the economy as a whole. A comprehensive review of early studies (Nerlove, 1967) revealed a wide range of estimates of σ. Many of the discrepancies of the early studies have been reconciled by Jorgenson (1972), Berndt (1976), and Kalt (1978). While some disagreement as to the magnitude of σ remains, these studies generally indicate a positive elasticity of substitution between capital and labor (generally in the neighborhood of 0.75 to 1.0).

Inquiries into the substitution possibilities between energy and capital and between energy and labor are much more difficult to locate. Berndt and Wood (1975) found that energy and labor were weak substitutes (σ=0.65), that capital and energy were strong complements (σ=-3.2), but this result may be due, at least in part, to their assumption concerning the nature of technological change over time. In a time-series study it is difficult to separate the input substitution possibilities available to a firm at a particular time from the change in input combinations that result from a changing production function over time. The relationship between input substitution and technological change will be discussed further in connection with model 22C's treatment of technological change.

In general, however, there seems to be little justification for assuming that the elasticity of substitution in LEAP processes should be zero; on the other hand, the costs of correcting this problem are likely to be quite high.

On the positive side, another factor that bears on the significance of the biases introduced by the fixed input ratio assumption is the number of conversion options explicitly considered in the model. As the number of options increases, the fixed input ratio bias is reduced. For example, if the model contained two types of oil heating systems, one which required a large amount of oil but limited amounts of capital investment in insulation, and another which required relatively less oil but a greater investment in insulation, a rise in the price of oil would cause the model to predict that residences would shift to the insulation-intensive heating system. Without this level of detail, increasing oil prices would be reflected either by much higher residential heating costs or by large shifts to more exotic forms of space heating. Hence, modeling energy sectors in a more detailed manner will diminish the fixed input ratio bias. While in theory it is possible to model each feasible combination of inputs as a separate process, thereby eliminating altogether the need to model within-process input substitution possibilities, it would be impractical to apply such a scheme to the LEAP model as a whole. It may be beneficial, however, for modelers using LEAP to consider those processes where substitution possibilities are likely to be important and to add greater model detail in those areas. The most likely candidates for this type of treatment appear to be those conversion processes in which energy conservation measures are likely to be highly significant, particularly industrial process heat, and space and water heating in all sectors.

Aside from increasing the number of conversion processes, another option for introducing substitution is that pioneered by Hudson and Jorgenson. Their approach is to aggregate interindustry transactions into ten sectors and to estimate the production coefficients of each sector with a translog production function. The use of this flexible functional form permits a wide range of possible substitution elasticities. The translog production functions are estimated econometrically, using data that span a substantial

time period. Input/output production coefficients are determined based on the estimated production functions and on input prices generated elsewhere in the model; these coefficients may then be used in the model's input/output section to calculate required inputs and resulting outputs.

Closely allied with model 22C's assumption of fixed coefficient production is its assumption of constant returns to scale (CRS). For a CRS production function if the inputs are increased (decreased) proportionately, output will change proportionately and unit costs will remain constant. The constant returns to scale assumption is important because it allows all production of a given conversion process to be modeled without reference to firm size. Without constant returns to scale, it is impossible to compute an aggregate supply curve for a given industry without knowing the distribution of firm sizes, since the industry cost curves will depend upon the economies of scale resulting from firm size.

Model 22C generally assumes that markets are perfectly (or at least workably), competitive and that there is no government regulation of economic activity. Thus, it would be anticipated that goods would be priced at their marginal costs (including a rent in the case of nonrenewable resources). Specific departures from this assumption do occur in version 22C, however, and will be noted below as they occur.

The generic LEAP framework does, in principle, incorporate some provisions for regulation and market imperfections, largely through the addition of shadow prices or range constrants on the model's results. It has been discovered, however, that the use of these provisions may cause problems with the solution algorithm; hence, they are not used in version 22C.[5]

Because capital and labor/materials markets are not included in version 22C, it is necessary to make an assumption about the supply of these inputs. In the model, capital and labor/materials are assumed to be available in unlimited quantities at fixed prices, which are user-specified.

The remaining conversion process assumptions are related to investment and technical change. The discussion of these assumptions is rather complex and will be deferred to later subsections.

Production in a Non-Declining Industry

Current period output is equal to the sum of current period output from existing plants and current period output from new plants. Output from an old plant is a function of its operating cost (which, in turn, depends on the plant's age) and the market price. Output from new plants is a function of the firm's decision to invest in new capacity. This section will first consider production from aging capital and then discuss the determinants of current period investment.

To understand how production from an aging plant is portrayed in LEAP, first consider how depreciating capital behaves in a competitive economy. In accordance with the underlying assumptions in Model 22C, the following conditions are assumed:

1. There are a range of vintages of plants.
2. In any period each old plant can produce at a constant input/output ratio up to its name plate capacity and can produce nothing in excess of that capacity at any price.
3. New plants can be constructed so as to produce any desired quantity at a constant input/output ratio.

Since the quantity of each input required by each plant is small relative to the total quantity of that input in the economy, the plant will perceive a horizontal input supply curve. Coupled with the fixed coefficient, constant returns to scale production function assumption, this means that each individual plant will exhibit a horizontal marginal cost curve up to its nameplate capacity. As the operating cost of any aging plant rises, it will eventually become more profitable to shut the plant down rather than to continue incurring losses. This will occur at the point where price no longer covers the average variable operating cost (since capital expense is a sunk cost). Because the plant perceives a horizontal marginal cost curve, the plant will <u>not</u> be shut down in stages; instead, it will produce at full capacity until average operating costs exceed price, when it will shut down completely.

The shutdown mechanism is depicted as follows for a plant built at time k and operating at time j:

$$C_f\ (k,j) = \beta \qquad \text{if } P(j) > \phi(k,j)\ , \tag{1}$$
$$C_f\ (k,j) = 0 \qquad \text{if } P(j) \leq \phi(k,j)\ ,$$

where

$\phi(k,j)$ = variable operating cost of a plant built at time k and operating at time j,

$P(j)$ = price per unit of energy at time j,

β = maximum value of the capacity factor.

In general, an aging factor is applied to $\phi(k,j)$ so that a plant's operating costs rise over time. Due to a data transcription error, this feature was inadvertently turned off in Model 22C.

LEAP's developers believed that while this specification was theoretically consistent, it produced abrupt changes that were not generally observed in the real world. As a result, they designed a smoothing mechanism which enables the user to specify the speed at which old plants will be shut down. This mechanism is portrayed in Equation 2.

$$C_f\ (k,j) = \frac{\beta}{1 + \left[\frac{\alpha\phi(k,j)}{P(j)}\right]^{\gamma}} \tag{2}$$

In this expression, when $\alpha\phi(k,j)$ is equal to $P(j)$, the output from the aging unit of capital is equal to $\beta/2$. As price exceeds $\phi(k,j)$, output increases, causing $C_f\ (k,j)$ to converge to β. As price falls below average variable cost, the denominator in Eq. 2 approaches infinity, causing $C_f\ (k,j)$ to approach zero. The rate of change of output is governed by γ; as γ approaches infinity, Eq. 2 becomes a zero/full capacity switch; that is, it behaves as does Eq. 1 where $C_f\ (k,j) = \beta$.

Equation 2 was presumably added to make the model more realistic. Unfortunately, Eq. 2 also contradicts several of the model's assumptions.

For example, the gradual shutdown behavior exhibited in this equation requires a U-shaped marginal cost curve. Being an implicit expression of the production function, Eq. 2 would then be inconsistent with the earlier assumption of a fixed coefficient, constant returns to scale production function which has constant marginal costs. Also, Eq. 2 is applied both to plants built in the current period and those built in earlier periods. This would seem to imply the possibility of substitution between inputs in response to input factor price changes, since a change in variable input prices would cause an alteration in average variable cost.

It may be concluded that the only way in which LEAP can be made theoretically consistent is if the user specifies a sufficiently high γ that Eq. 2 acts as a zero/full capacity switch. The model specification presents the user with a trade-off between theoretical consistency and realism. As was noted in the introduction, the appropriate criteria for model evaluation are those more closely tied to meaningfulness and accuracy rather than perfect consistency. While a large γ in Eq. 2 will produce theoretically consistent results, it may not be as useful in portraying known real world conditions as the smoother transition resulting from a smaller γ. At the present time it is not clear whether the inconsistencies generated by a small gamma are serious or not. In order to make this determination model runs using various gammas would have to be made. In Model 22C γ is set equal to approximately 15 for all processes.[6]

Having determined the level of production from old plants, it is then only necessary to determine the level of output from plants installed in the current period. Within each production process at any given time the ratio of variable to fixed production factors is constant. Consequently the determination of current period capital investment naturally gives rise to associated input and output quantities and operating costs which are based on this fixed ratio assumption.

Under this set of conditions a profit-maximizing firm will invest in new capacity in each time period up to the point where the net present value of the next unit of capacity is reduced to zero. Stated differently, investment will occur up to the point where the next unit of investment produces no further economic profit. In LEAP Model 22C, this condition

is expressed as follows:

$$-N_{CO}(j) + \sum_{k=j+1}^{2N_p+N-1} [P(k) - \phi(j,k)] \; C_f(j,k) \; D(j,k) \tag{3}$$

$$+ [P'(j) - \phi(j,j)] \; C_{fG}(j,j) \; D(j,j) = 0,$$

$$j = N_p + 1 \text{ to } N_p + N$$

where

N = number of global time points, points at which results of interest are obtained;

N_p = number of local time points before the first global time (prehorizon points) and after the last global time (post-horizon),

$P'(j)$ = price per unit of energy at time j, calculated from Eq. (3).

$P(j)$ = price per unit of energy at time j, equal to $P'(j)$, except for the past model horizon and the global time.

$N_{CO}(j)$ = present value of capital expenditure for a unit of capacity at time j,

$\phi(j,k)$ = variable operating cost of a plant built at time j and operating at time k (defined previously),

$C_f(j,k)$ = capacity factor of a plant built at time j and operating at time k (see Eq. (2)),

$C_{fG}(j,k)$ = approximate capacity factor of a plant built and operating at time j,

$D(j,k)$ = discount factor to obtain present value at time j of cost evaluated at time k.

Thus, it is assumed that the investor contemplating the acquisition of a new plant knows the vector of all future prices and variable costs — that he has perfect foresight. Perfect foresight investment is not a very appealing assumption. In general, investors will either explicitly or implicitly anticipate several possible sets of future prices, assigning probabilities to each in accordance with how great the investor perceives the likelihood of any given set of prices. Thus, an investor who believes

that there is a 30% chance of a foreign oil embargo in the year 2000 will behave differently than an investor who is certain there will be an embargo or an investor who is certain there will not be an embargo. Unfortunately, in Model 22C the latter two options are the only ones available. Moreover, there is no simple way to model the effects of exogenous events which take investors by surprise. For example, suppose that there is an oil trade embargo (modeled as a reduction or elimination of oil imports). Because of the perfect foresight assumption, investors in Model 22C, will anticipate the event long before it occurs, increasing investment in crude production and alternative energy sources, so that there is only a relatively small disturbance when the embargo is imposed.

Model approximations of both of these types of behavior can be developed by creative use of the model's solution algorithm, but this would involve reprogramming. Taking the unexpected exogenous event (e.g., oil embargo) first, it may be possible to break the total modeling period into two pieces, one modeling behavior before the unexpected shock and the other modeling behavior after the shock. Thus, in the first portion of the modeling period, expectations would be based on a scenario of future events which did not contain the exogenous shock. The model would then be restarted from the time of the unexpected event and run through the end of the modeling period. The adjustment to the unexpected shock would occur entirely within the second period.

It may also be possible to include provisions for allowing investors to anticipate the possibility of several alternative future scenarios without severely altering the model's basic structure. For example, a situation where investors believe there is a 30% probability of an oil embargo in a future year might be approximated in a multistep process. First, the model would be run twice, once with no embargo and once with the certainty of an embargo. The expected future prices that investors rely upon when making capacity additions could then be constructed as a weighted average of the prices generated in the preliminary runs (the weights would be the investors' estimate of the probability that the embargo would occur). The first two runs would then be repeated using the new weighted average price expectations in the investment decision. This process would be continued until

the change in the weighted average expected prices between consecutive runs reached some arbitrarily small amount.[8]

While LEAP has no specific provision for incorporating uncertainty of the type discussed above, it does provide, in principle, for the use of weighted average price expectations. For this purpose, LEAP's expectations are based on a combination of perfect foresight and an historical trend. The theoretical justification for this procedure is the belief that on those occasions when investors guess incorrectly about future prices, they err in the direction of assuming that the future will be very much like the recent past. It should be noted that while this weighted historical trend/perfect foresight option is available in the general LEAP structure, it was not used in version 22C.

Investment decisions in this subsection have been described in terms of the individual investor (or firm). The reason that this is possible (when the conversion process is not disaggregated by firms) is due to the underlying assumptions of perfect competition and constant returns to scale (CRS). Perfect competition guarantees that the product price is the same for all firms and CRS guarantees that average production costs are constant regardless of plant size. Hence all firms' capacity investment decisions can be described by the investment criterion of Eq. 3.

Capital markets are not modeled in LEAP. An unlimited amount of capital is available in each period at a constant cost. Therefore, investment in one type of plant does not preclude other investments either in this period or in future periods. Decisions which firms confront daily in the real world, such as choosing between capital projects or deciding whether to delay a project to increase its return, are not modeled in LEAP. The LEAP investor can have his cake and eat it too in the sense that he can invest in any and all projects which have a non-negative net present value. Perfect competition requires the existence of a large number of small firms so that each individual firm does not perceive the influence of its investment and production decisions on the market prices of inputs or outputs. Hence, each firm will perceive the return to each investment as being independent of the return to all of its other investments. Consequently, if the firm perceives that a delayed investment could earn a

greater return, it will invest both now and in the future period. Stated differently, the option of a delayed investment with an increased return is an illusion since each firm will realize that even if it dosen't undertake the current period investment, some other firm will, so long as the net present value of the investment is non-negative.

Capacity additions in LEAP are not determined wholly by the condition of Eq. 3 that the net present value of an additional unit of capacity be zero. Capacity additions also depend on the energy output of a conversion process. LEAP determines a conversion processes' energy output per year as follows:

$$Q(j) = \sum_{k=1}^{j} C_f(k,j)N_W(k) \qquad j = N_p + 1 \text{ to } N_p + N, \tag{4}$$

where

$Q(j)$ = quantity of energy per year on the output link of the process at local time j and

$N_W(j)$ = capacity additions at local time j (a unit of capacity will produce a unit of energy per year if the capacity factor is unity).

A conversion process also requires an energy input; thus:

$$Q_I(j) = \sum_{k=1}^{j} Q_F(k,j)C_f(k,j)N_W(k) \qquad j=N_p + 1 \text{ to } N_p + N, \tag{5}$$

where

$Q_I(j)$ = quantity of energy per year on the input link of the conversion process at local time j,

$Q_F(k,j)$ = quantity of energy per year required at time j by a plant built at time k to produce one unit of output energy per year at time j.

Capacity additions $N_W(j)$ must be positive by definition. But, as determined by Eqs. 4 and 5, $N_W(j)$ may be negative. When this occurs, LEAP invokes a shutdown algorithm which retires plants until $N_W(j)$ is

positive. When $N_W(j)<0$ for a $j>N_p + 1$ in Model 22C replaces Eq. 5 by

$$Q_I(j) = \frac{Q(j)}{\bar{Q}(j)} \sum_{k=1}^{j} Q_F(k,j)C_f(k,j)N_W(k) \tag{6a}$$

where

$$\bar{Q}(j) = \sum_{k=1}^{j-1} C_f(k,j)N_W(k) \text{ , and} \tag{6b}$$

$$N_W(j) = 0 \tag{6c}$$

As capacity in place is taken into account through Eqs. 5-6, a firm, as portrayed in the basic conversion process, may be forced into capacity additions earlier than would be dictated by Eq. 3 and perfect foresight alone.

Pricing in a Non-Declining Industry

To determine the price of conversion process output in an expanding market it is necessary to calculate the price at which a quantity equal to the difference between demand and production from old plants will be provided by production from new plants. In version 22C, the prices of all inputs except energy are exogenously specified. If the amount of energy demanded as a production input for new plants in a given conversion process is small relative to the total demand for that input energy type, the price of the energy input will appear to the firm to be fixed as well.

Given fixed input prices, a fixed coefficient production function, and constant returns to scale, the supply curve will be horizontal. Any quantity of output will be available from new plants at a fixed price, and no output can be obtained from new plants at any lower price. To specify a Model 22C supply curve in an expanding market, it is only necessary to calculate the price at which the output from new plants will be made available. Such a function can be derived from the profit-maximizing condition in Eq. 3. Re-

organizing its terms so that the first year price is moved to the left side of the equation produces:

$$P'(j) = \phi(j,j) + \frac{N_{CO}(j)}{C_{fG}(j,j)\ D(j,j)} - \frac{\sum_{K=J+1}^{2Np+N-1} [P(K)-\phi(j,k)]C_f(j,k)\ D(j,k)}{C_{fG}(j,j)\ D(j,j)} \tag{7}$$

The current year price is stated in terms of future prices. This is necessary because the perfect foresight investment assumption requires that investors known, with certainty, what the return on their investment will be before the funds are committed. In a one-year model, Eq. 4 would simply reduce to:

$$P'(j) = \phi(j,j) + \frac{N_{CO}(j)}{C_{fG}(j,j)\ D(j,j)} \tag{8}$$

In the case where rising energy prices imparts a positive slope to the supply curve, Eq. 7 no longer represents a simple horizontal supply relationship [since $\phi(j,k)$ is dependent on the quantity of energy demanded]. Eq. 7 is still used to calculate market prices, but it no longer can be termed a supply curve since the nature of $\phi(j,k)$'s dependence on the output quantity is not specified.

In practice, the solution algorithm calculates the last period price, then uses that price to calculate the previous period's price. The procedure is then repeated for the next previous period. This process, called a "roll back," continues until the prices in all periods have been computed.

There is considerable confusion in the LEAP documentation (cited in the Introduction) concerning marginal costs, embedded costs, and pricing. While each year's production function exhibits constant returns to scale, it is not true that marginal cost equals the average cost of production of plants from all existing vintages (embedded cost) in the model since the cost per unit of output will not be equal for plants constructed in different time periods. LEAP bases conversion process pricing on marginal, not embedded costs: hence, only plants built in the current period are considered when calculating current year prices. This is an

appropriate procedure since the price of output must be high enough to cover the variable cost of production of the most expensive units of output produced, otherwise those units will not be produced.

Production and Pricing in a Declining Industry

The previous discussion demonstrates how prices and quantities are determined in an expanding industry in Model 22C. In the case of a declining industry, where capacity additions are equal to zero and older plants must be shutdown, the mechanism functions in a similar manner. As the model attempts to equilibrate supply and demand, market price falls, since the quantity demanded is less than the output of older plants. As market price falls, plants begin to shutdown. If the shutdown mechanism (Eq. 2) functions as a zero/full capacity switch, plants will shutdown in an efficient manner as price falls below the average variable cost of an ever greater number of plants. Eventually the quantity supplied by the remaining old plants will be equal to the quantity demanded at the market price.

If γ in Eq. 2 is relatively small, this efficient outcome will not occur. In that case, the shutdown mechanism will reduce the output of all plants somewhat rather than shutting down the more inefficient plants. Prices will be based on the costs of the most expensive plant still operating (a plant which probably would not be operating had the shutdown process functioned efficiently). Thus, a small γ, in addition to the problems discussed above, will cause departures from marginal cost pricing.

Technical Change

Two types of technical change are available in LEAP: revolutionary change and evolutionary change. Revolutionary change occurs as new processes become available (electric cars, advanced nuclear, solar energy, etc.). Evolutionary change occurs as knowledge and new equipment increase the output of processes and reduce their costs.[9]

In LEAP Model 22C, revolutionary technical change parameters include the availability date of each new process, their initial costs and fuel

efficiencies, and a "penality" for early implementation. Thus, new processes can be brought on line before their availability dates if a specific penalty is added to the initial cost. Availability dates and penalty parameters, consequently, have a very significant influence on the output of the model. For example, changing the electric car availability date from the year 2000 to 1990 in the 22C version of the model causes electricity demand in 2020 to increase by 20% and the demand for synfuels in that same year to drop by 42% (U.S. Department of Energy, 1980).

In LEAP, evolutionary technical change parameters are introduced as factors that exogenously change the amounts of capital, labor/materials, and energy required to produce a given amount of output over time. These mechanisms are handled in a manner analogous to the way the aging factor operates to change variable cost. Thus, by properly setting the parameters, a user can model a wide variety of labor-augmenting, capital-augmenting, and thermal efficiency-augmenting technical change scenarios.

An additional level of detail is provided by the subdivision of the capital and labor/materials technical change parameters into two forms: one that affects only the quantity of capital and labor necessary to produce a unit of output from a new plant, and one that affects the capital and labor requirements of production in all plants.

While this flexible structure of evolutionary technical change is available in the LEAP code, with the exception of improvements in thermal efficiency and certain specific exceptions in the electric power process (see below) it was not used in Model 22C. Thus, the main technical change element used in the model is revolutionary change. As time passes, production will shift from older processes to newer processes; hence technological improvement occurs as inefficient technologies are discarded in favor of those that are relatively more efficient. In addition, as time passes, the thermal efficiencies of some processes will improve, but the sort of capital and labor augmenting technical change discussed above is generally not used.

As noted briefly above, there are many conceptual similarities between input substitution and technical change. Both concepts refer to an

alteration in the combination of inputs required to produce a given output quantity. Input substitution refers to a change in production techniques selected at any given time. Technical change refers to a change in the set of possible production techniques over time. Stated differently, input substitution refers to movement along a production function while technical change refers to a shift in the production function.

Technical change may have a wide variety of causes. For example, progress may be completely exogenous, due to a fortuitous discovery or innovation. On the other hand, progress is quite often the result of directed research designed to overcome a production bottleneck. In this case, technological progress will be partially endogenous, occurring in response to shifts in demand or changes in the relative costs of production inputs. Most energy/economic models do not attempt to capture the relationship between input prices, final demands, and technical change. LEAP is no exception.

To the extent that factor productivity improvements are ignored in Model 22C, the prices of outputs from those processes experiencing improvements will be overestimated. Production from the most rapidly improving processes, therefore, will be understated by the model. The model will also overestimate the required amounts of capital and labor, but this effect will be negligible since labor and capital markets are not explicitly modeled.

How serious is the omission of capital- and labor-augmenting technical change? There is a considerable history of economists' attempts to econometrically estimate the rates and types of technical change in the U.S. economy. Many of these studies are flawed by their failure to account for input substitution. It may have been this difficulty which led Hudson and Jorgenson to model technical change as acting equally on both capital and labor inputs (Hicks neutral), thereby allowing relative input proportions to change only in response to input price changes. In a recent study, Kalt (1978) attempts to simultaneously estimate technical change and elasticity of substitution coefficients over the period 1929-

1967. He concludes that within this time frame, technological progress has functioned almost entirely through increases in the productivity of the labor inputs (an annual improvement of about 2.2%). These studies deal with the United States economy as a whole rather than with the energy sector in particular, consequently the evidence they offer is only suggestive at best. They do indicate, however, that the assumption of zero factor productivity improvement should be seriously re-examined.

Retrofitting of Existing Plant

Investment decision in LEAP are associated with installations of new facilities. In reality, however, there are a number of important investment decisions that are made after a plant has gone into operation. Incremental investment decisions of this kind fall into four categories:

1) Capital investment to make the existing plant more energy efficient (e.g., the addition of insulation).

2) Capital investments which allow the use of a different type of fuel, either in addition to or in substitituion for the fuel currently in use.

3) Capital investments which extend existing plant life.

4) Capital investments which are required by environmental regulations.

For the purpose of this discussion, incremental investments of these types will be referred to as "retrofit" investments.

Unfortunately, except in special cases such as pollution control, it is not possible to model retrofit decisions within the current LEAP framework. This limitation is principally due to the fact that input substitution is not permitted in LEAP.

For example, energy efficiency-improving investments (item 1, above) primarily involve the substitution of capital for energy in response to relative price changes. Investments to facilitate fuel switching (item 2) involve the substitution of one fuel input for another. Even if Model 22C

permitted input substitution, additional revisions would be required since the model permits only one energy input to each conversion process. Investments which extend existing plant life (item 3) may or may not involve the same technical coefficients as new process investments. If they involve different input factor shares, the fixed coefficient assumption is violated. On the other hand, if incremental and new investments have the same technical coefficients, then they are indistinguishable from the model's viewpoint, since capital is infinitely divisible. Finally, retrofitting due to changes in environmental requlation does not constitute input substitution; a within-process procedure for handling these costs has been suggested in the technical change section.

The fact that the version 22C assumptions preclude the incorporation of most retrofit investments does not mean that this behavior cannot be captured in the model, however. A retrofitted facility could be modeled as a separate but allied conversion process in the following manner: Assume a retrofitting process which converts oil-fired industrial boiler to coal; inputs would include capital labor/materials, coal, and oil-fired boiler capacity, in fixed proportions. Thus, each capacity unit added in the retrofit process would lose capacity in the allied process. The input price of the unit of capacity to the retrofit process would be set equal to the remaining revenue foregone by removing it from production in its original use. Reprogramming would be difficult, however.

Note that this retrofitting process would not be appropriate in the case of a firm installing a dual fuel capability. There is no way to model this option short of allowing multiple energy inputs and factor substitution in the conversion process.

Electric Power Conversion Process

The electric power conversion process is a more complicated version of the generic conversion process. This additional complexity is required principally because electric energy is, for most purposes, nonstorable; consequently it must be produced at the time it is to be used. Because the quantity of electricity demanded varies both by season and by time of

day, producers must be capable of following a highly variable electric demand (load) schedule.

Different types of electric generating equipment have different cost structures. Certain types of generators (e.g., nuclear plants) have very high capital costs but rather low operating costs. Other generators (e.g., combusion turbines) have relatively low capital costs but high operating costs. Electric utilities attempt to minimize production costs by meeting the electric power demand at each point in time with the most efficient combination of equipment available. In general, this is a rather complex process because, in addition to the capital and operating costs mentioned above, utilities must consider a large number of other factors such as the availability of transmission facilities, maintaining reserves, and scheduling maintenance.

Many energy models simplify these problems by dividing electric demand and generating equipment into discrete categories. The simplifying assumption is made that equipment with relatively low operating costs will always be switched on before equipment with higher operating costs Model 22C uses this approach. Electric conversion processes are faced with three categories of demand: base, peak, and intermediate. As with the generic conversion process, the basic decision variable is the amount of capacity to be added in each period. The electricity sector requires an additional user-supplied input: an electric load duration curve. This curve shows where the divisions between base, intermediate, and peak load occur so that any total electric demand may be subdivided into three separate demand categories corresponding to the model's three categories of generating devices. Note that it is not the electric load that is specified by the user, but rather the portion of any given load that falls into the base, intermediate and peak load categories.

The division of electric load into the three categories occurs in the Electric Power Loading and Electricity Allocation processes (see Appendix E, p.6). The allocation process begins by satisfying the base load. It draws output from the various existing electric generation plants based on their relative operating costs. Then new base load capacity calculation

is then made in the usual way (drawing on the least expensive processes, subject to allocation process constraints). Intermediate load demand is then satisfied; existing plants which were too expensive when compared with new base load capacity may be viable as intermediate load units. New intermediate capacity is then computed. Finally, the process is repeated to satisfy the peak load. Additional constraints on plant use may be added; for example, output from the fast breeder reactor (FBR) may never be used to satisfy peak load. It would be expected that this constraint would be involked only for very old FBR plants where the aging factor had raised operating costs to the point where it could not compete with new base load plants, but could compete with prospective peak load equipment.

Certain electric power conversion processes are the only Model 22C conversion processes which permit capital productivity changes. Certain processes experience some capital learning (FBR, conventional nuclear, biomass) while fossil fuel boiler processes experience increasing capital costs (coal by 25%; oil and gas by 100%). The justification for declining capital productivity in the fossil boiler process, is that it reflects the model's incorporation of regulation through environmental use regulations requiring scrubber installations.

Electricity is priced to customers somewhat differently from pricing in other conversion processes. Three types of electricity are priced to consumers in an allocation process as an average of new base, intermediate, and peak generating costs which are each marginal costs. Hence, the model departs from its usual marginal cost pricing assumption; firms in the electricity sector do not exhibit profit-maximizing behavior.

An example may help to clarify this point. One of the conversion processes in the transportation sector is electric automobiles. The energy input for this process is, of course, electricity, which is priced on the basis of the average cost of base, peak, and intermediate generating facilities. It is anticipated, however, that electric cars will generally be charged during off-peak (night-time) hours when the marginal cost of electricity is quite low. In fact, a profit-maximizing electric utility would be expected to charge lower rates for off-peak hours due to the

excess capacity available during those periods. The energy input price, therefore, is too high to the electric car conversion process and the output (vehicle-miles) of this process will be artifically suppressed. Conversely, the price of electric inputs to conversion processes that tend to consume principally during peak hours is too low in the model; consequently, the output of these processes will be overstated.

More generally a significant flaw in LEAP's model of the electricity sector is the lack of an explicit linkage between the load duration curve, final demands for electricity and the changing technology of electricity-consuming equipment. The three-way linkage is apparent in tracing through the expected impact in time-of-use electricity rates. As electricity becomes more expensive during the peak periods, electricity users are encouraged to reduce consumption in those periods. If the savings are large enough, new technology equipment will be produced which reduces peak period consumption and thus alters the load duration curve. The 22C version of LEAP relies on these linkages between final demands, the load duration curve and technology to be incorporated in its inputs. A more sophisticated incorporation would make the three influences (demand, load duration curve and technology) endogenous in LEAP. Trimble et al. (1980) suggests that the linkages could be made by making the moments and peak and minimum load of the load duration curve dependent on the stocks of electricity-consuming equipment. Then as new technology equipment replaces old equipment, the efficiencies of this stock change thus causing the load duration curve and demand, which can be derived from the load duration curve, to change. When the load duration curve is introduced as a step function, as it is in LEAP, the modeling procedure can be changed to accomodate this and still establish the desired linkages.

4. RESOURCE EXTRACTION PROCESSES

The basic production technology that underlies the LEAP conversion process also serves as a basis for the resource extraction process. The fundamental difference between the two is that LEAP resource processes explicitly model the depletion of existing wells (in the case of oil and gas) and of the in-place resource base for each energy type.

There are four basic types of resources in model 22C: crude oil, natural gas, coal, and uranium. Domestic crude oil production is modeled by four resource activities: Alaskan oil production, shale oil production, enhanced crude recovery, and other domestic crude production. Domestic gas production is modeled by three processes: Alaskan gas production, enhanced recovery gas production, and other domestic gas production. There are six different types of coal in the model, with distinctions made on the basis of location and sulfur content. The six coal processes are Western low sulfur, Western medium-high sulfur, mid-continent, Appalachian medium-high sulfur, Appalachian low-sulfur, and Appalachian premium. All uranium mining and milling is handled in a single process.

Note that oil and gas production are modeled entirely in separate processes; there is no explicit treatment of associated and dissolved gas. This is a significant omission for two reasons. First, in reality, it is rather difficult to separate oil and gas exploration expenses as clearly as it is implicitly done in model 22C. For example, increased demand for oil and the resulting increase in exploration activity will generally lead to an increase in natural gas proven reserves as well. Secondly, when gas is associated with oil in a single reservoir, the production rates of each are not independent of one another. Additional increments of oil produced from a reservoir will imply a decrease in the total amount of recoverable gas. Similarly, increased gas production will lower the quantity of recoverable oil. This tradeoff is not modeled in 22C.

Another tradeoff absent from the LEAP resource processes concerns the relationship of total production from a given well and the rate of recovery. While LEAP does contain an output curve for each well that reflects

different production rates in response to price changes, there is no explicit account for the real world phenomenon that beyond a certain point the cost of a faster recovery rate is a reduced total available quantity. In LEAP, total recoverable reserves are independent of the production rate.

In the generic LEAP model a distinction is made between the depletion of oil and gas resources and that of coal, uranium, and oil from shale. In the case of oil (except shale oil) and gas, after a well is opened, it is assumed that production declines over time as the quantity remaining in the reservoir falls. This depletion is completely separate from the aging factor discussed in the conversion process section; it acts directly on output rather than through variable cost. In addition, depletion of the resource base causes the costs of opening new wells to rise over time. In the coal, uranium, and shale oil extraction processes, the resource base also declines over time, causing an increase in costs associated with opening new mines. However, once open, the amount produced in each time period does not dwindle over time, as with gas and oil. Instead, production is constant in each year until the mine is depleted.

Much of the richness of this depletion mechanism has been omitted from Model 22C. In this version, all resource processes experience depletion of the resource base, yet no processes experience reservoir depletion. Consequently, once an oil or gas well is opened, it will produce at a constant output until depleted. Thus, without the efficiency decline of reservoir depletion, this, *ceteris paribus*, would most likely bias downwards the cost of oil and gas production.

Price formation occurs in a slightly different manner in the extraction processes than in the conversion processes in LEAP. Because the costs of opening new wells and mines rises over time due to depletion of the resource base, resource producers will not be satisfied to receive a price which simply covers the capital and variable costs of production from the most recently opened mine or well. Instead, producers will view those resources that they choose to leave in the ground as an investment; the higher prices they expect to receive in the future constitute the return

on that investment. To induce producers to produce and sell a unit of resource now rather than later, it is necessary to pay them not only the cost of production, but a premium equal to the present value of the foregone profit associated with selling now rather than later. This "user cost" is calculated in model 22C on the assumption that producers have full knowledge of all future resource prices. The price of a given resource is the sum of the cost-based price (calculated in the same manner as in the conversion process) and the user cost due to resource depletion.

It should be noted that version 22C does not model imported resources as production activities. The prices of these resources (gas and oil) are established exogenously. Unlimited quantities of imports are assumed to be available at the fixed prices.

5. ALLOCATION PROCESSES

Allocation processes in the model act as interfaces between suppliers and demanders. In their simplest form, stripped of lags and price responsiveness parameters, allocation processes channel a single supplier's goods to the demander(s) — — multiple demanders are summed to get a single demander — — offering the highest price or allocate a single demander's purchases to the lowest priced supplier. All this is complicated by equal-price market share, price responsiveness, and behavioral lag parameters.

Equal price market shares need to be specified because the goods flowing into the allocation processes are not perfectly fungible. For example, in the residential sector there is an allocation process called "cooking and other" whose inputs are "cooking and other gas" and "cooking and other electricity." While gas and electricity are virtually perfect substitutes in some uses (such as space heating), in most of the "cooking and other" uses consumers will exhibit a preference for one or the other. Gas, for example, is most useful for applications that require rapid changes in heat (principally cooking) while electricity is more useful for motor-driven appliances. Consequently, if the output prices generated by the "cooking and other electric" and "cooking and other gas" conversion processes were identical, it would be expected that a certian ratio of outputs between the processes, based on consumer preferences for their differing characteristics, would naturally result. There is no reason to believe that this ratio would necessarily be 1/2 (equal shares) since there are fundamental differences between the goods entering the allocation process. Furthermore, other differences in equal price market shares can be traced to LEAP's level of aggregation. Since consumption in LEAP is aggregated on the national level, local and regional differences in transportation costs, fuel availability, regulation, etc., cannot be explicitly modeled in the conversion processes. For all of these reasons, the user must supply a parameter that specifies the market share of each good when prices are equal.

These same considerations give rise to the requirement for price responsiveness parameters. If the price of cooking with gas rises relative to the price of cooking with electricity, it would be expected that consumers would desire to switch from gas to electricity. Because consumers are not a homogeneous group, however, it is expected that the desire to switch might occur at different price ratios for different consumers. Consumers who are price-conscious might desire to switch immediately as the price of gas cooking rose above that of electricity cooking. Other consumers who place more value on their ability to rapidly change heat levels would be willing to pay a substantial premium for gas cooking. This behavior gives rise to price responsiveness parameters that reflect the degree to which the economic actors represented by the allocation processes will desire to change the flow of goods from one source to another in response to relative price changes.

Finally, the desire to alter the flow of goods is one thing, while the ability to do so is something else. Returning to the residental example, consumers may desire to switch from gas to electric cooking in response to a small rise in the cost of gas cooking. However, they may have a large investment in gas capital goods which will delay the desired switch. In some allocation processes other sources of inertia may exist as well, such as long-term contracts or supplier loyalties. To model these lags a behavioral lag parameter is included which causes the desired change to be spread out over several periods. Some portion of the desired change occurs immediately (e.g., consumers in the market for new stoves), while other portions of the desired change occur later (as more stoves require replacement).

Algebraically, these concepts may be related in a fairly straightforward manner. Assume that the demand for a comodity has to be allocated among I competing suppliers. Assuming that decision makers could allocate instantly, the share of supplier i ($i \in [1,I]$) at time j can be expressed as follows:

$$\hat{S}(n,i,j) = \frac{f(n,i)\,[P(i,j)]^{-\gamma}}{\sum_{i=1}^{I} f(n,i)\,[P(i,j)]^{-\gamma}} \qquad i=1,\ldots I \tag{9}$$

where

$\hat{S}(n,i,j)$ = market share of each supplier (i) at time j at allocation node m,

$f(n,i)$ = equal price shares for supplier i at node m,

$P(i,j)$ = price per unit energy for supplier i at local time j,

γ = sensitivity parameter of share to price.

Market shares at equal prices [f (n,i)] are user specified; they are used to model a bias for certain suppliers. If no bias is to be introduced in the model, then,

$$f(n,i) = \frac{1}{i} \qquad i \in [1,I] \tag{10}$$

The degree of adjustment in market share to a given change in price is controlled by the price responsiveness parameter (γ). As γ increases, large market share changes can be induced by relatively small price differentials. By selecting a sufficiently large γ, the market share equation becomes a zero/one switch, fully shifting out-put in response to any price difference. This behavior corresponds to the fungible good case.

Behavioral lags are introduced by making this period's market share $S(n,i,j)$ a function of the desired current period market share $\hat{S}(n,i,j)$ and the actual market share observed last period $S(n,i,j-1)$.

$$S(n,i,j) = \begin{cases} F(\beta)\ \hat{S}\ (n,i,j) + G(\beta)\ S\ (n,i,j-1) & \begin{array}{l} i=1,\ldots I \\ j=\text{starting at 2nd} \\ \text{global time} \end{array} \\ \hat{S}(n,i,j) & \begin{array}{l} i=1,\ldots I \\ j=\text{starting at 1st} \\ \text{global time} \end{array} \end{cases} \tag{11}$$

where

β = behavioral lag coefficient ($0 < \beta < 1$) which is input to code. The behavioral lag coefficient is used to represent consumers' reluctance to change their purchasing habits,

$$F(\beta) = \beta \sum_{\ell=0}^{\Delta-1} (1-\beta)^{\ell} \left[\frac{\Delta-\ell}{\ell}\right]$$

$$G(\beta) = (1-\beta)^{\Delta} + \beta \sum_{\ell=1}^{\Delta-1} (1-\beta)^{\ell} \left[\frac{\ell}{\Delta}\right]$$

$\hat{S}(n,i,j)$ = share of energy allocated to node i, assuming no behavioral lag ($\beta = 1$), defined in Eq. (9).

Specification of the allocation process parameters is critically important, particularly in those cases where one or more of the prices of the goods to be allocated is specified exogenously as well. For example, the crude oil allocation process determines the proportions of Alaskan oil, enhanced recovery crude, shale oil, other domestic oil, and imported crude that will be received by the oil refining conversion process. Since the price of foreign crude is specified exogenously and unlimited quantities are available at the fixed price, large values of γ and β will imply that either there are no imports of crude oil, or that the price of all crude oil to refineries is exogenously determined, thereby greatly reducing the significance of the domestic production models.

In Model 22C, the allocation process γ's range from 2.5 to 12.5, with 5 and 10 being common values. The beta structure is typically arranged to provide a 50% adjustment over periods ranging from 3 to 20 years with a typical value of about 9 years.[10]

The problem of the interface between imports and allocation processes is principally related to the exogenous nature of imports in the model. Exogenous foreign sector specifications are not uncommon; most large energy/economic models do not explicitly model foreign production. There are generally two reasons for this omission. First, production decisions by foreign countries are often more dependent on political factors than on economic variables. Political processes are inherently more difficult to model than economic processes since political goals and behavior patterns are often poorly defined. Secondly, in building a national energy model

the foreign sector is only necessary insofar as it affects the performance of the domestic economy. Hence, detailed modeling is not required.

To avoid modeling foreign production, it is necessary to make an assumption about the relationship of price and the quantity supplied by the foreign sector. Generally this assumption will take the form of either a price at which unlimited quantities of imports will be available or a quantity which will be made available regardless of price (above some minimum threshold price).

The LEAP framework allows the incorporation of either type of foreign sector specification. The selection of one or the other ought to depend on how the modeler views the relative accuracy of his world oil price projections and foreign production quantity estimates. In general, foreign production quantities have been more predictable than world prices. Consequently, there has been a tendency to take the constrained quantity approach. In that case, it is necessary to estimate the quantity that will be available from foreign sources and the minimum acceptable price.

Model 22C takes the opposite approach, offering unlimited quantities of imports at an exogenous price. This forces the modeler to estimate the equilibrium oil price (to avoid the corner solutions of a 100 percent or zero percent foreign market share) and to estimate the equal price market shares for the foreign and domestic markets.

Neither of these approaches is intrinsically superior to the other, since both require model input data that is rather difficult to estimate. The only other option, however, is to model the foreign oil production process and to make an assumption concerning the objectives of the foreign governments that make production and pricing decisions.

Another potential difficulty with the allocation process is that it fails to account for the fact that market shares may depend upon factors other than the relative prices. For example, the price responsiveness of consumers will depend upon the costs of shifting from one source of supply to another. Returning for a moment to the residential cooking example, a rise in the price of gas or electricity relative to the cost of stoves which use these fuels will cause consumers to shift more quickly between

gas and electric stoves as the relative prices of gas and electricity change. This will result in an increase in both the γ and β paramaeters.

In some processes it may also be possible to alter current equipment to allow conversion between fuels (dual-fuel capability). If the price of energy rises relative to the cost of adding dual-fuel capability, more producers will have this capability installed, consequently their responsiveness to relative fuel price changes will be greatly enhanced.

Output prices of all allocation processes are an average of the input prices weighted by the relative quantity of each input. In principle, this type of average cost pricing is not representative of actual markets since in reality prices must be high enough to cover the full cost of the most expensive units produced. This problem has previously been discussed in connection with the electric power conversion processes where output is priced as an average of base, intermediate, and peak load electric costs. In the electric conversion process it was noted that average cost pricing may emulate regulatory behavior.

There are two additional generic circumstances where the average cost pricing observed in allocation processes might be justified. First, when the differences in input prices are a result of the inputs being different kinds of goods (such as the residential "cooking and other" example discussed above), the averaging process is probably justified in that it reflects the amount the average consumer would pay for an average-quality additional unit of cooking. In cases of differentiated goods, the marginal unit is not necessarily the most expensive unit.

Secondly, some degree of averaging may be justified by the fact that the model represents (generally) national aggregates which hide regional or local differences. Here again marginal units need not be the most expensive units. It is presently unknown to what extent average cost pricing in allocation processes is designed to emulate regulation, product differentiation, or aggregation problems.

6. GOVERNMENT REGULATION

One of the basic assumptions underlying model 22C is that there is no government regulation of the energy sector of the economy. The assumption of perfectly competitive markets, however, might be said to broadly approximate the behavior of regulated markets, since the principal goal of much of economic regulation is to force markets with natural monopoly characteristics to emulate competition. Model 22C goes further than this, however; much of the model's behavior that appears to be inconsistent with the competitive assumption seems to produce pricing results similar to those that might have been obtained had regulation been explicitly modeled.

One example of this type of implicit regulation was discussed earlier. In LEAP, electricity is priced as the average of marginal peak, intermediate, and base load costs. Thus, there are no seasonal or time-of-day rates. This behavior corresponds well with past practice in electric utility rate regulation and has served as the basis for a significant strand of criticism by economists of regulatory commission policies. Regulatory practice, however, is currently undergoing a period of some change. Seasonal rates are now quite common and time-of-day rates likely will be widely accepted if metering costs fall. Because regulation is incorporated in such an indirect fashion in LEAP, it is impossible for LEAP to estimate the impacts of future regulatory policy shifts of this type.

The combination of regulation and inflation causes electricity to be priced significantly below long-run marginal cost. There are two reasons for this. First, rapidly rising costs have resulted in more frequent and more substantial requests for rate increases by electric utility companies. A substantial lengthening of regulatory authority processing time has resulted both from the increased caseload and the greater frequency of challenges to proposed rate increases by members of the public. Secondly, most regulatory authorities compute rates on the basis of current costs plus a return on invested capital. Many regulatory authorities calculate this allowed return on the basis of the original cost of the capital assets, not on the basis of the cost of replacing those assets. Furthermore, often regulatory authorities have not fully reflected this cost differential in the allowed

rate of return on capital either, so that rates charged for electricity do not fully reflect the long-run marginal costs of producing additional units of power.

Model 22C emulates real world pricing of electricity in that it holds price below long-run marginal cost. In the model, however, this underpricing is due to the averaging of the cost of bases intermediate and peak load energy coupled with the assumption that over 90% of electric demand will fall in the base load category.[11] This bias causes electricity to be priced below long-run marginal cost in the model just as regulation has actually resulted in underpricing. There is no reason to believe, however, that the model 22C capital bias will be greater, less than, or equal to the real world regulatory bias, since it stems from a different source.

Even if the model's bias serves as a good approximation of current regulatory policies, a change in those policies or in the rate of inflation could affect the price/long-run-marginal-cost differential in ways that could not be captured in the model. For example, recent trends toward automatic adjustment clauses have reduced the regulatory delay which prevented rates from reflecting actual costs. Similarly, the use of market-oriented estimates of the cost of capital or the use of inflation-adjusted rate bases for the calculation of allowed return will help to alleviate the original cost bias. Changes in regulatory policy of this type and their potential effects on energy use cannot be modeled within the version 22C framework.

Certain types of government regulatory behavior may have been built into the model's parameter values as well. For example, at least a part of the production costs associated with government emission standards are likely to be included in the model's technical coefficients. Other possible cases of regulation grafted onto the model 22C data base include the federal subsidies and regulatory costs associated with additions of nuclear generating capacity and the loan guarantees and subsidies that are available to emerging technologies. A determination of the extent to which these elements of government intervention are included in model 22C would require a detailed examination of its data base; such an analysis is considerably beyond the scope of this report.

Thus while government regulation is never explicitly modeled in version 22C, many of its impacts are visible in the model. Therefore, LEAP modelers and users should be careful to delineate exactly which types of government intervention they wish to include and which they intend to omit.

7. FINAL DEMAND PROCESS

The final type of activity contained in LEAP model 22C generates final demands. There are four of these final demand processes in 22C: residential demand, industrial demand, commercial demand, and personal transportation demand. These activities can be further decomposed into demands for 19 specific energy uses, such as residential space and water heating, industrial indirect heat, commercial lighting, and vehicle miles. The 19 final energy uses are listed by sector in Appendix D.

The basic model 22C demand equation states that the quantity demanded in any period is a function of the value of an exogenously specified quantity path for that period, the departure of the previous periods actual demand from the exogenously specified path, and the departure of the present period market price from the exogenously specified price path:

$$Q(J) = Q_p(J) \left(\frac{Q(J-1)}{Q_p(J-1)}\right)^S \left(\frac{P(J)}{P_p(J)}\right)^{E_L} \tag{12}$$

where:

$Q(J)$ = the quantity demanded in period J;

$Q_p(J)$ = the value of an exogenously specified demand quantity path in period J;

$P(J)$ = the market price in period J;

$P_p(J)$ = the value of a hypothesized price path in period J;

S = a user-supplied sensitivity parameter; and

E_L = a user-supplied sensitivity parameter related to price elasticity.

The quantity path is constructed from several exogenous components:

$$Q_p(J) = Q_p(J-1)\left[\Gamma(J)\ \gamma(J)\right]^{\Delta} \tag{13}$$

where:

$\Gamma(J)$ = a parameter related to income; and

$\gamma(J)$ = a sector-specific parameter. [See Goldstein, Alsmiller, and Barish (1980), pp. 60-62.]

Δ = length of time between model years (5 years in Model 22C).

The final demand process contains some of the most serious weaknesses in model 22C. Problems with this process stem from two sources. First, there is very little price elasticity in the current model 22C specification. Secondly, there are final demand specification errors in some sectors.

Price Insensitivity

The initial quantity demanded is set equal to the period 1 value of the quantity path; thus, unless the price deviates from the price path, demand will be completely determined by the exogenous quantity path. In model 22C, during the first five periods (25 years), P(J) is defined to be equal to $P_p(J)$, hence market price cannot deviate from the path. Consequently, there is no demand price elasticity within this time frame. During the last five periods of the model horizon, $P_p(J)$ is set equal to the market price in period five; consequently, quantity could diverge from the exogenous path. It is unlikely that large discontinuities will be found at this point, however, since in model 22C the price elasticities are quite small. Hence, in model 22C, final demands are essentially user-specified quantities.

Economists disagree on the value of the long run price elasticity of energy; but they agree that it is not zero. Estimates of residential elasticities for electricity and natural gas, for example, generally lie in the ranges of -0.7 to -1.3 and -0.6 to -2.5, respectively. Three early surveys of this subject are those of Taylor (1975), Baughman and Joskow (1976), and CRA (1976, pp. 326-335). More recent studies include those of Cohn (1978) and Chern (1978).

The problem of the suppression of the price elasticity of final demand would not have been as serious an omission if conservation had been explicitly modeled. This feature might be added in either of two ways. First, changes in energy prices could be allowed to induce changes in capital/fuel or variable cost/fuel production input ratios to attempt to model the increased use of (say) insulation and heat recycling. This procedure would, however, violate the fixed coefficients production assumption.

A second approach would consist of modeling conservation as a conversion process. Such a process would have the usual capital and labor/materials inputs, but would not have an energy feedstock. Output would be "energy" in the sense that it would cause decreased demands for energy in the various model sectors. Such a provision appears to have been initially included in the LEAP code for the industrial sector. Two processes, called "direct heat conservation" and "indirect heat conservation," seem to have been intended to model investment in energy conservation. Similar processes do not appear in other model sectors, however, and the industrial conservation processes are turned off for the purposes of Model 22C.

Lack of Cross Substitution: An Illustration with Transportation

An inherent weakness in the final demand specification is the lack of cross substitution effects -- its inability to substitute between final demands. This may be traced to the basic LEAP structure itself rather than its application in version 22C. Consider the transportation end use: The specification of the transportation end use demand is one of the weakest in the model. This is due both to neglected substitution possibilities between final demand categories (shipping freight by rail, for example, is clearly a close substitute for trucking) and to the exclusion of relevant parameters. These problems may be particularly serious because of the relatively large portion of energy consumed by this sector. Note, for example, that half of the oil use in the United States is accounted for by transportation.

Much of the policy analysis currently being undertaken in the transportation sector is related to conservation, i.e., measures to reduce energy consumption associated with transportation. Such conservation might be achieved through a shift from automobiles to mass transit, an improvement of vehicle fuel efficiency, or a shift from highway vehicles to rail for transport of freight. The effects of these shifts will be only partially captured by the current LEAP transportation sector.

The structure of the transportation sector in LEAP is shown in Figure 5. This figure illustrates clearly the difficulties that exist within LEAP in representing the types of effects noted above. It may be observed, for example, that there is no explicit coupling among automobiles, buses, and trains for passenger transport. Similarly, there is no coupling between truck and rail freight transport. The lack of explicit modeling of substitution between the various forms of transportation which compete with one another inhibits the representation of conservation-oriented policy initiatives.

To model alternative transportation policies, it may be useful to modify the structure of the transportation sector to permit substitution between various competing transport modes. The example of passenger transport will demonstrate how this might be done.

In dealing with passenger transport, we first should note the distinction between local and intercity transport. Further subdivisions also may be described, e.g., local transport may be subdivided into commuting and general non-commuting. To permit substitution, it is necessary to make the basic demand variable passenger-miles rather than vehicle-miles. An allocation process is then used to apportion passenger-miles among the various options such as single occupant automobiles, car pools, buses, and trains.

Each transit conversion process would, of course, be priced in the same manner as all other model conversion processes, as a function of capital and operating costs. Thus, as with other conversion processes, a government policy encouraging mass transit could be represented by a shadow price in mass transit conversion processes, reflecting the government subsidy.

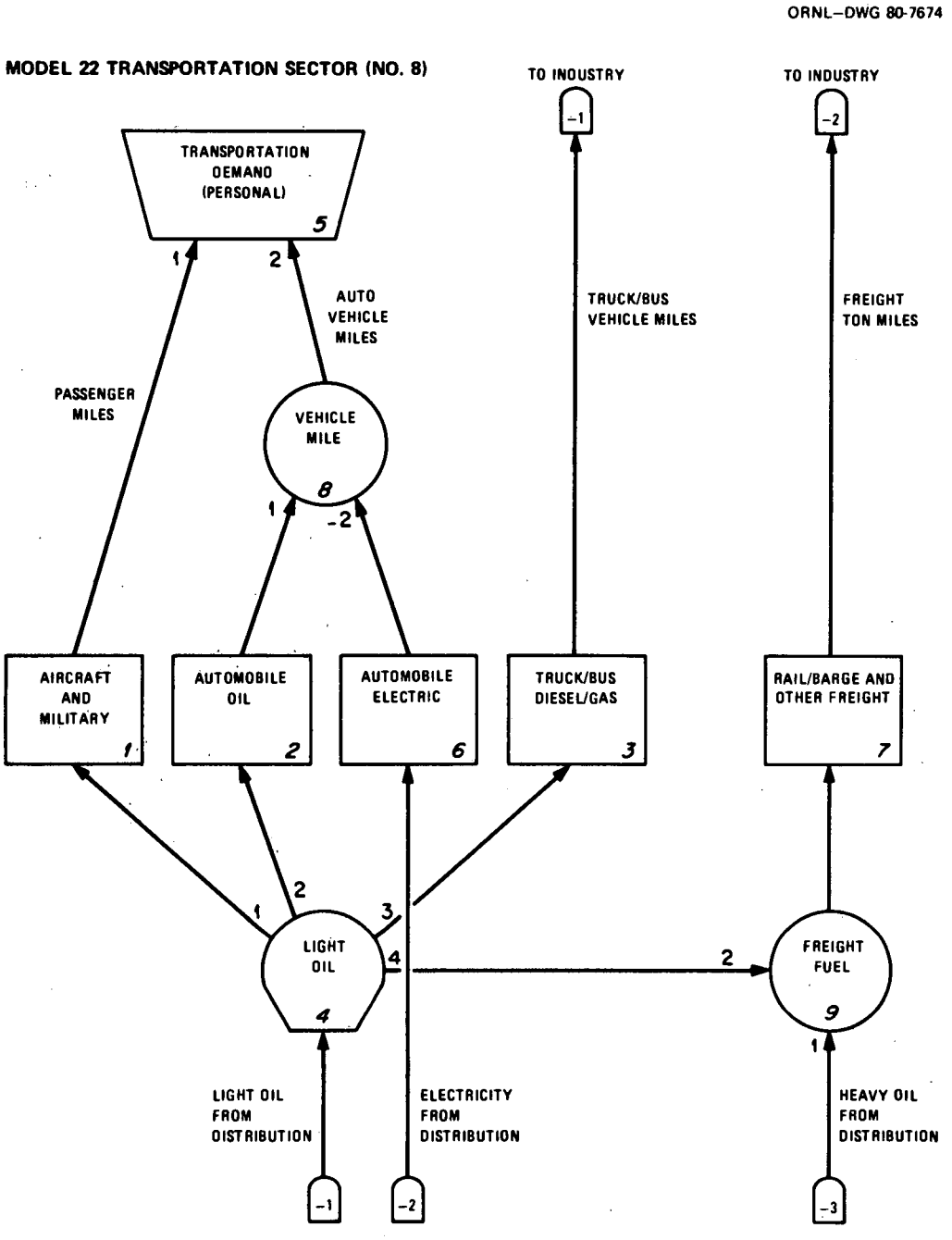

Fig. 5. Network Diagram for the Transportation Sector

An alternate representation of a portion of the transportation sector is shown in Figure 6. For purposes of local commuting, rail transport is classified under electric. In addition, electrically driven trolleys and buses are included in the category of electric transit, although separate categories could be specified. Similarly, diesel and gasoline driven buses and vans are included in a single cateogry. Here, too, subdivision is possible, and may be desirable for cases where emphasis would be placed on van pooling as a commuting mechanism. Similar diagrams could be constructed to represent the substitution possibilities involved in noncommuting local transport, intercity passenger transit, and intercity freight transport.

ORNL–DWG 80-20034

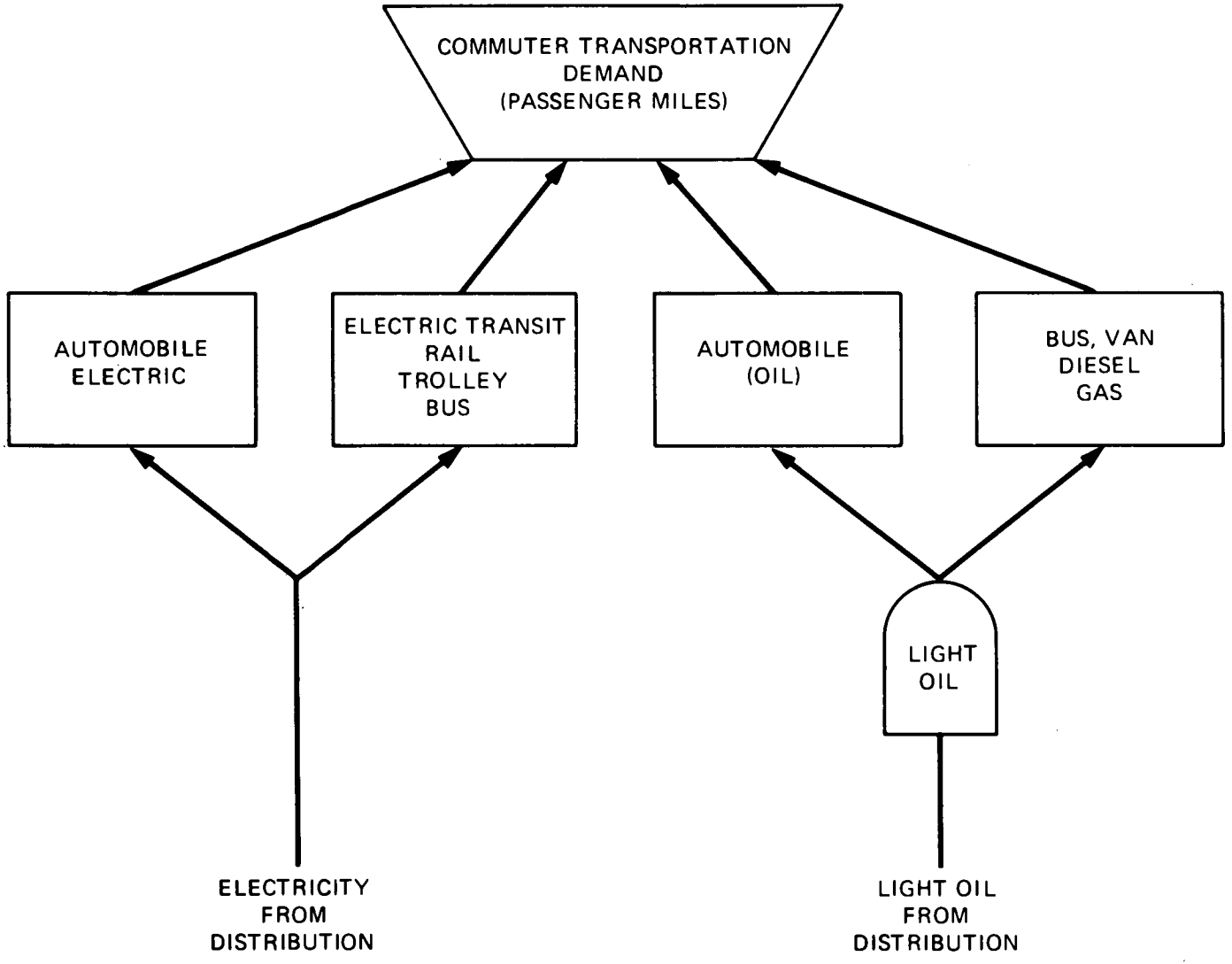

Fig. 6. Alternate representation of transportation demand for local commuting (Trapezoid represents both final demand and allocator.)

8. SOLUTION ALGORITHM

LEAP solves simultaneously for all prices and quantities in all periods. The solution algorithm's function is to equilibrate supply and demand simultaneously for all processes in all time periods. To accomplish this, a vector of trial prices is assumed and demand and supply quantities are calculated on the basis of those prices. This is known in the model vernacular as a "uppass." A new set of trial prices is then based on these trial quantities. This is known as a "downpass." The process continues until the trial results converge on equilibrium values.

The solution technique selected for LEAP is a successive overrelaxation (SOR) procedure. Although a comprehensive discussion of this process is considerably beyond the scope of the paper, two points should be noted.

First, the SOR technique (and all other currently available techniques that might have been selected) is designed to find a local equilibrium. This equilibrium may or may not be global as well, and multiple equilibria may exist. Consequently inappropriate initial guesses may be more troublesome then merely raising computation time; they may produce inappropriate results as well; see Oblow (1981).

Second, people familiar with the model have reported verbally that certain compromises have been made in the theoretical structure of the model to facilitate the solution process. One such report is that uncertainty could be incorporated into investment behavior as modeled by the conversion processes, but it seriously hampers the convergence of the model. Verbal indications have also been made of model parameters having been occasionally adjusted for similar reasons.

9. MODEL DATA[12]

Overview

It should be clear from much of the previous discussion that LEAP is heavily data dependent. The model requires large quantities of data and, in turn, is very sensitive to changes in parameter values. For example, simply by changing data elements the conversion process used to model coal gasification can also be used to model vehicle-mile production by diesel trucks or the operation of residential refrigerators.

Many of LEAP's more important parameters (for example, the δ's and β's in the allocation processes) are values for which an analyst is unlikely to have any intuitive feel. They are pure numbers, hence, it is difficult to determine whether they are in error by a factor of 2 or 200. While they may ultimately be estimatable by econometric techniques, their current values were not generated in this manner. Their only basis is the judgment of the modelers. Because these allocation parameters are relatively important (determining such behavior as the speed at which new technologies will be adopted in response to price changes), it would be preferable if the allocation processes were designed to more readily allow intuitive or econometric parameter estimates.

This significance of LEAP's parameters may also be observed from the fact that they may hide significant behavior or assumptions that are not revealed in the model's structure itself. For example, Chapter 6 discusses the possibility that data may encompass certain regulatory actions, such as pollution control requirements. Similarly, nowhere does the model explicitly account for the salvage values of plants which have been retired. These values may be significant; decommissioning of nuclear power plants, for example, is likely to entail large negative salvage values. While these values are not treated explicitly in the model, it is possible that a portion of these costs may have been calculated into the plant's initial capital cost. Only a detailed evaluation of the data could reveal the extent to which such assumptions have been incorporated in the data.

Given the importance of data in LEAP, it would be expected that users would attach great importance both to knowing what data values were employed in any particular model run and to knowing the sources and the quality of the data used. Until recently, neither of these statements was entirely true with respect to Model 22C.

Not all model data were known because LEAP internally overrides many input parameters with values specified in the computer code itself. At the present time it is believed that substantially all of these internal parameters have been found. A complete set of model data is available in Stewart and Goldstein (1981).

Secondly, the sources of many (perhaps most) of the data parameters used in version 22C are still undocumented. While the Stewart-Goldstein paper contains the proximate sources of all data parameters, many of these "sources" contain no information concerning where the parameters originated or how they they were derived.

Finally, in many cases where data sources are known, the observations have been derived from other Department of Energy models. Thus it is difficult to make statements concerning the quality of these observations without exploring the nature of the other models as well. There is certainly no reason to assume that the economic assumptions which lie beneath other DOE models will be similar to those which are employed in LEAP.

Input Parameter Assessment

During the period when this report was undergoing final revisions, the DOE/EIA sponsor requested that a group of economists[13] at ORNL make a quick assessment of some of Model 22C's input values from the information that was becoming available from related reports also reaching maturity. None of the members of the group was familiar with LEAP's details; their assessments depend on their understanding of the information in the reports made available to them and should be judged in light of the "quick response" nature of the assessment task. The assessment was based on other ongoing and past research projects at ORNL and relies largely on industry data, engineering data or information, published studies,

knowledge about the outputs of related models or knowledge (in the case of the residential and commercial sectors) about the models used to determine input values. The purpose of this exercise was to identify parameter values that might be out of line and thus might warrant further examination.

The group examined parameters in all sectors except distribution and the resource process. In some sectors, notably electricity and industrial, the breakdowns are to such a fine degree that obtaining a reasonable parameter value, as well as assessing it, was hampered. The model-specific nature of many of the parameter inputs and difficulties encountered in determining exactly to what the parameters referred also hampered the assessment. Wherever possible, when sources for alternative estimates of similar parameters were known, they were cited.

Tables 2 and 3 present parameter assessments based on the ORNL residential/commercial modeling experience. Since these models are used as inputs to Model 22C, the examiners in this sector were able to provide the most comprehensive assessments. Nevertheless, a number of parameters still could not be easily assessed due either to their disaggregate level of detail and the lack of data or to their specificity to LEAP and the lack of anything with which to compare them. In other cases, such as with the coal sector in Table 4 and in some cases the industrial sector in Table 5, the relevant studies are crude and can provide only a rough estimate of the parameter value. For the nuclear sector (no table), the oil and gas sector (no table) and the electricity sector, though data at a sufficiently disaggregate level is available, presentations of much of it for use in Model 22C would require aggregation to average levels not typically available. Thus the assessments in these sectors are based on crude approximations of data readily at hand. In the oil and gas sector, the parameter assessment in the allocation process looked to be within reasonable bounds except for the FREQPR (equal price market shares) parameter. FREQPR was forced to be nearly 100% for domestic refined oil in order to exclude oil imports. Also the examiner noted that the twenty percent market share for crude oil from shale seemed high. All other oil and gas sector parameters

appeared to be reasonable excluding the ten parameters for which the examiner had no basis for assessment. All parameters in the nuclear sector appeared to be within reasonable bounds. In the transportation sector, the basic conversion process parameters were examined and the values of QUANTY, IYRAVL, CLIM, and PRELIM seemed to run contrary to intuition and the examiner recommended further examination. All other basic conversion parameters in the transportation sector appeared to be within reasonable bounds.

In summary, the group examined approximately 340 LEAP input parameters. Of these, approximately 35 percent were found to be within reasonable bounds, 8 percent appeared to be in conflict with information from known sources, and 21 percent appeared on intuitive grounds to warrant further examination. The group found the remaining 36 percent difficult to assess principally because they were unable to link the parameter definitions to known data or familiar concepts.

Table 2. Assessment of Parameter Inputs: Commercial Sector*

Input Parameter			Range of Values	Estimable ?	Reasonable ?	Comments
Parameter	Fuel	End Use				
SHSENS	all	heat, water heat, cool, elec. serv.	5.0	yes	no	Cohn (1980) based on Cohn (1978) implies the value should be -0.621.
SCC	oil	heat/cool	31.15	yes	yes	Reasonable if in 1975 dollars. Estimation probably from cost-estimation manual, not data.
	gas	heat/cool	24.94	yes	yes	Same
	elec.	heat/cool	10.87-37.84	yes	no	Seems low relative to other fuels. Jackson (1978) inputs use cost for elec. heating equip. approximately 10% lower than for gas or oil.
	solar	heat/cool	165.5-200.0	yes	yes	Estimates vary greatly; out usually runs a factor of 3 or more than for oil or gas.
EFF	all except solar	heating, cooling	0.6000-2.400	from engineering analysis	yes for present, low for future	30-100% improvements in heating, cooling efficiencies possible.
AVEFFI			0.6080-2.400			
	elec.	lighting	1.000	"	yes	This is apparently a value (1.0) set relative to some (e.g., 1975) baseline.
EFLIM	oil, gas	heating	1.260-1.350	yes	?	

(continued on next page)

Table 2 (continued)

Input Parameter			Range of Values	Estimable ?	Reasonable ?	Comments
Parameter	Fuel	End Use				
EFLIM	elec.	heating	1.610	yes	?	
	elec.	cooling	1.330	"	?	
QuanlY	oil	heat	0.6200-0.6500	This is question of baseline data.	roughly 30% low for 1977 (ORNL Model)	May not use same definition of sector as in Jackson et al. (1978).
	gas	heat	1.110	same as above	roughly 40% low for 1977 (ORNL Model)	Same as oil heat
	elec.	all	0.1098-0.6000	same as above	roughly 50% high	Same as above
IPLTIM	all except solar	all	3-5	?	yes	
	solar	heat, cool	6	?	?	Seems unlikely that solar should take longer to include in building design and installation.
IYRAVL	all	all	1930-1985		yes	
CLIM	all	all	1.000		?	
CRATE	all	all	0.0098-0.0198		?	
PRELIM	all	all	1.000		yes	This is relatively low - technical equipment, should mature reasonably quickly.

(continued on next page)

Table 2 (continued)

Input Parameters			Range of Values	Estimable ?	Reasonable ?	Comments
Parameter	Fuel	End Use				
ICLIFE	all	all	20-30		yes	Somewhat longer lives than assumed in ORNL commercial model, but data are scarce: Jackson (1978).
ITXLIF	all	all	16-24	?	?	
IDLIFE	all	all	20-30	?	?	
EQFR	all	all	0.6000	?	?	
Demand Elasticity	all	all	-0.0152-1.621	yes	no	Assuming this parameter is defined as the elasticity of demand with respect to GNP *certis paribus*, the elasticity should be essentially equivalent to the elasticity of commercial floorspace with respect to GNP-ORNL commercial model, cited in report, uses different elasticities for different building types, but aggregate is approximately 1.0. If technological innovations adopted even without fuel price rises are assumed, elasticity of demand for fuel with respect to GNP might reasonably drop to ~0.8. The year-to-year variations shown in Table C.9.c (Stewart and Goldstein, 1980) don't seem reasonable nor would they result from a reasonable interpretation of the Jackson (1978) model, as cited with Table C.9.c.

* See Stewart and Goldstein (1981) for the parameter definitions.

Table 3. Assessment of Parameter Inputs: Residential Sector*

Input Parameter			Range of Values	Estimable ?	Reasonable ?	Comments
Parameter	Fuel	End Use				
SHSENS	all	all	2.5-5.0	yes Cohn (1978, 1980)	no	
BELAG	all	all	3.0-9.0	yes Cohn (1978, 1980)	yes	
FREQPR	elec.	heat	53.5	Cohn (1978, 1980)	yes	53.5 is pretty close to share presently observed with unequal prices - seems low if equal prices are assumed
	Oil	heat	36.5		yes	37% seems high - present share of new housing 4-7%; at equal prices that share would likely decrease, but at least not increase to 37%
	gas	heat	9.0		no	Seems too low - present share is 45-50% of new housing - equal prices would lower that, but 9% seems too low
FREQPR	all	all except heat	2.5-97.5		yes	
SCC	all	all	0.0-208.0		?	Values seem high by a factor of ~2 for most cases. Perhaps definition is unusual.
VOC	all	all	0.0-1.18		?	
EFF	all except solar	heating	0.60-0.956		yes	
AVEFFI			0.60-0.956			
	solar	heating	1.0		?	

(continued on next page)

Table 3 (continued)

Input Parameter			Range of Values	Estimable ?	Reasonable ?	Comments
Parameter	Fuel	End Use				
AVEFFI	elec.	heating freezers, refrig.	0.30		?	Definition of efficiency of these uses unknown
	elec.	cooling	2.11		yes	
	all	cooking	0.694-1.0		?	
EFLIM	all	all except cooling	1.0-2.5		?	
	elec.	cooling	1.4			
VOCRAT	all	all	0.0098-0.20		?	
QUANI1	oil	heat	1.94		yes	
	gas	heat	3.01		yes	
	elec.	heat	0.69		yes	
	elec.	lighting, freezers, refrig, cooking, and others	0.20-0.45		no	Seems 50% too low (compared to actual use 1977)
	gas	cooking and other	0.49		yes	
	elec.	cooling	0.68		no	Roughly 50% high (compared to actual use in 1977). NOTE: Total elec. use (over all uses combined) is reasonable.

(continued on next page)

Table 3 (continued)

Input Parameter			Range of Values	Estimable?	Reasonable ?	Comments
Parameter	Fuel	End Use				
IPLTIM	all	all	2-5		yes	
IYRAVL	all	all	1930-1985		yes	
CLIM	all	all	1.0		yes	
CRATE	all	all	0.0-0.098		?	
PRELIM	all	all	1.0		yes	
ICLIFE	all	all	10-25		yes	
IDLIFE	all	all	1-25		?	
EQFR	all	all	0.0998-1.0		?	Dosen't seem relevant to residential sector.
Demand elasticity	all	all	0.1138-1.786	simulation using Hirst model	no	Overall demand elasticity cited in Hirst and Carney (1978). - Approximately 0.4 and well-behaved (i.e., not increasing, then decreasing, etc.).

*See Stewart and Goldstein (1981) for the parameter definitions.

Table 4. Assessment of Input Parameters: Coal Sector*

Parameter	Coal Product/Processes	Range of Values	Estimable ?	Reasonable?	Comments
FREQPR	coal	0.218-31.58	yes	yes	Data Resources, Inc. (1980)
	coal liquids	25.0	yes	yes	ICF, Inc. (1980)
	coal and coal products	0.218-70.0	yes	yes	ICF, Inc. (1980)
TRANS1	all	0.0-0.9600	?	?	
SCC	coal liquefaction and gasification	10.76-11.68	yes	yes	Systems Development Corp. (1980)
VOC	"	0.9200-1.290	?	?	
EFF	"	0.7000-0.7500	roughly	yes	EPRI (1979) reports between 0.4 to 0.75
EFLIM	"	1.000	?	?	
QUAN1Y		0.0	?	?	
IPLTIM		8	yes	yes	Systems Development Corp. (1980)
IYRAVL		1955	?	yes	
CLIM		1.000	?	?	
PRELIM		1.000	?	?	
ICLIFE		20	yes	yes	Systems Development Corp. (1980) - given at about 25 yrs
ITXLIF		16	yes	yes	
EQFR		0.4500-0.6000	yes	no	Appears high; see Synfuels Development Corp. (1980)

*See Stewart and Goldstein (1981) for the parameter definitions.

Table 5. Assessment of Input Parameters: Industrial Sector

Input Parameter	Range of Values	Estimable ?	Reasonable ?	Comments
Demand Elasticities:				
Direct Heat	0.4770-1.618	lack data	?	Estimated elasticities vary widely.
Indirect Heat (Geo)	0.8753-1.750	lack data	?	Estimated elasticities vary widely.
Electric Services	0.6589-1.739	yes	high - vary	Six other studies yield elasticities between 0.04 - 0.61 EIA estimates vary from 0.37 to 0.47; see Edmonds (1978).
Feedstock	0.7462-1.553	yes	high	Demand for feedstock has been inelastic.
Met Coal	0.0222-1.000	yes	low for 1980, 1985	Reddy (1974) in Edmonds (1978) estimate was 0.39. Model 22C estimate was from 0.36 - 0.43.
Lubes, Waxes, Asphalt	0.3938-1.000	yes	yes	Existing values seem reasonable.
Trucks and Buses	0.2951-1.000	yes	seems to be high	Demand for diesel tends to be inelastic (0.1 - 0.2) in Model 22C.
Rail and Barge	0.4408-1.000	yes	seems to be high	It is expected that demand for rail and barge service is highly inelastic since there exist few substitutes for current rail and barge service.
SHSENS	2.5-5.0	yes for some	yes	
BELAG	9.0-11.0	yes for some variables	no	
FREQPR	0.02-96.0	no	questionable	
SCC	0.1498-52.01	yes	yes	
VOC	0.0198-1.570	yes	yes	
OLFR		?	?	

(continued on next page)

Table 5 (continued)

Input Parameter	Range of Values	Estimable ?	Reasonable ?	Comments
EFF	0.2379-2.680	yes	yes, except coal, heat pump...	
IPLTIM	3-10	yes	yes	
IYRAVL	1930-1985	?	?	
CLIM	1.000	?	?	
CRATE	0.0098-0.0298	?	?	
PRELIM	1.000	?	?	
VOCRAT	0.0198-0.7000	?	?	
EFLIM	1.000-2.000	?	?	
ICLIFE	20-30	yes	yes	

*See Stewart and Goldstein (1980) for the parameter definitions.

Table 6. Assessment of Input Parameters: Electricity Sector*

Input Parameter	Range of Values	Estimable ?	Reasonable ?	Comments
IYRAVL	1930-2010	no	yes	The years are fairly close to those reported by EPRI (July 1979).
CLIM	0.9000-2.000	no	?	
CRATE	0.0-1.000	no	no	The values for oil and gas boilers are extremely high.
PRELIM	1.000-1.250	no	?	
AVAIL	0.6600-0.9200	no	?	
LOADFC	0.0498-0.8800	yes	no	The values for peaking plants are rather high, see EPRI.
ICLIFE	30	no	no	This is a rather arbitrary definition of facility life. See EPRI, *Technical Assessment Guide*, July 1975 for life estimates.
ITXLIF	16-24	no	yes	This is a definition, so estimation is not needed; but there are many different ways to calculate tax depreciation.
IDLIFE	30	yes	yes	Can be estimated from current practice as demonstrated in new utility bond issues.
EQFR	0.4500	yes	yes	Can be estimated from current practice as demonstrated in new utility bond issues.
Electricity Allocation	5.0-10.0	yes	?	
Uranium Allocation	5.0-10.0	yes	?	
Light Oil Allocation	5.0-9.0	yes	?	
Gas Allocation	5.0-9.0	yes	?	
Coal Allocation	5.0-9.0	yes	?	
Electric Power Loading				
Base	91.74	yes	yes	
Intermediate	7.49	yes	no	

(continued on next page)

Table 6 (continued)

Input Parameter	Range of Values	Estimable ?	Reasonable ?	Comments
Peak	0.75	yes	yes	
SCC	4.760-47.70	yes		EPRI, (July 1979).
VOC	0.500-5.570	yes		EPRI, (July 1979).
EFF	0.2398-0.4500	yes	yes	EPRI, (July 1979).
AVEFFI	0.2348-1.000	yes	?	
EFLIM	0.9500-1.240	yes	?	
VOCRAT	0.0-0.5000	yes	?	
QUANTY	0.0-2.650	yes	no	May be newer values available: see Edison Electric Institute (1979).
IPLTIM	4-18	yes	no	Many lead times are significantly longer than reported in EPRI, (July 1979).

*See Stewart and Goldstein for the parameter definitions.

10. CONCLUSION

This report has been intended as a review and critique of the economic structure of LEAP Model 22C. As may be expected, this report emphasizes deficiencies in Model 22C's structure and implementation. It shows that many of LEAP's features seem to reveal a sophisticated understanding of the interactions of various elements of the energy/economy. The basic sectoral structure (aside from transportation) and the modularity of the model are a few of the elements which fall into this category. Many of the more serious problems lie less with the LEAP framework than with the specific version 22C. Items of this type include the treatment of secondary energy flows, the function which gradually shuts down old plants, the lack of retrofitting, and the exogenous nature of final demand.

The reports's principal findings and recommendations are stated in the Executive Summary.

The LEAP code and data base were essentially frozen in June 1979 for Model 22C. The scope and content of the formal and informal documentation has changed since then and is likely to undergo future alterations as well. This report is based on currently available documentation (including the "oral tradition" passed down from ORNL staff members who have operated Model 22C). While the broad outlines of the economic landscape of LEAP contained in this report are unlikely to be altered, some of the details may require revision as more is learned about the nature of the computer codes and data.

FOOTNOTES

1. This discussion is based on the discussion of model evaluation methodology in Basmann and Rhodes (1981).
2. Input supply curves are required because it is an industry supply curve that is being derived.
3. This is only approximately correct; a more precise discussion of LEAP demand formation may be found below in section 7.
4. Some relatively minor exceptions exist in certain electric power conversion processes.
5. Identification of this problem resulted from discussions with R. G. Alsmiller of the ORNL staff.
6. See Stewart and Goldstein [1981].
7. The perfect foresight assumption is not unique to the LEAP family of models. For example see Manne [1976].
8. Procedures similar to these are currently being employed with the Hudson-Jorgenson Model [1974].
9. It is possible for process costs to increase over time due to more costly environmental or safety standards. These cost increases may also be modeled as evolutionary technical change.
10. See Stewart and Goldstein [1981].
11. Ibid.
12. Data is used here in a broad sense to include the output of engineering-economic models as well as observations of economic or technological variables.
13. The group participants were Steve M. Cohn and Kenton R. Corum for the Residential and Commercial Sectors, Robert D. Perlack for the Coal Sector, H. Dang Nguyen for the Industrial Sector, Chris R. Thomas for the Nuclear and Transportation Sectors, and Larry J. Hill for the Oil and Gas Sector.

REFERENCES

R. J. Adler, et al., *The DFI Generalized Equilibrium Modeling System (GEMS)*, Decision Focus, Inc., Palo Alto, California, 1979.

R. G. Alsmiller, et al., *Interim Report on Model Evaluation Methodology and the Evaluation of LEAP*, Oak Ridge National Laboratory, Oak Ridge, Tennessee, 1980.

Badger Plants, Inc., *Conceptual Design of a Coal to Methanol Commercial Plant*, Volume II, DOE Publication #FE2416-24, Department of Energy, February, 1978.

R. L. Basmann and G. F. Rhodes, *Perspectives and Foundation Concepts for Evaluating Policy Models*, Report to Oak Ridge National Laboratory, 1981, unpublished.

Martin L. Baughman and Paul L. Joskow, "Energy Consumption and Fuel Choice by Residential and Commercial Consumers in the United States," *Energy Systems and Policy* I: 305-323, 1976.

Martin Becker, *Implications of Modeling Assumptions in LEAP*, Rensselaer Polytechnic Institute, Troy, New York, 1980, unpublished.

Ernst R. Berndt, "Reconciling Alternative Estimates of the Elasticity of Substitution," *Review of Economics and Statistics* 58 (February): 59-68, 1978.

Ernst Berndt and David Wood, "Technology Prices and the Derived Demand for Energy," *Review of Economics and Statistics* 57 (August): 259-268, 1975.

E. G. Cazalet, *Generalized Equilibrium Modeling: The Methodology of the SRI-GULF Model*, Decision Focus, Inc. and Stanford Research Institute, Palo Alto and Menlo Park, California, 1977.

Charles River Associates, *Long-Range Forecasting Properties of State-of-the-Art Models of Demand for Electric Energy*, Prepared for Electric Power Research Institute, EPRI EA-221, Palo Alto, California, December, 1976.

Charles River Associates, *The Economic Foundations of LEAP Model 22C*, CRA Report #486, September, 1980.

Wen S. Chern, "Demand and Conservation of End-Use and Planning Energy in the Residential and Commercial Sectors," *Energy Systems and Policy* 2: 267-285, 1978.

Steve Cohn, *Fuel Choice and Aggregate Energy Demand in the Commercial Sector*, ORNL/CON-27, Oak Ridge National Laboratory, Oak Ridge, Tennessee, 1978.

Steve M. Cohn, "Fuel Choice and Aggregate Energy Demand in the Residential and Commercial Sectors," *Energy* 5 (12): 1203-1212, 1980.

Data Resources, Inc., *Coal Service Reference Manual*, May, 1980, unpublished.

Edison Electric Institute, *Statistical Yearbook of the Electric Utility Industry*, Edison Electric Institute, Washington, D.C., 1979.

J. Edmonds, *A Guide to Price Elasticities of Demand for Energy: Studies and Methodologies*, ORAU/EA-15, Oak Ridge Associated Universities, Oak Ridge, Tennessee, August 1978.

Electric Power Research Institute, *Coal to Methanol via New Processes Under Development: An Engineering and Economic Evaluation*, EPRI AF-1227, Electric Power Research Institute, Palo Alto, California, October 1979.

Electric Power Research Institute, *Technical Assessment Guide*, EPRI PS-1201-SR, Electric Power Research Institute, Palo Alto, California, July 1979.

M. Goldstein, R. G. Alsmiller, Jr., and J. Barish, *Specification of the Equations for LEAP Model 22C*, ORNL-5707, Oak Ridge National Laboratory, Oak Ridge, Tennessee, 1981.

M. Goldstein, *LEAP Model 22C Results Versus EIA 1979 Report*, ORNL/TM-7739, 1981.

E. Hirst and J. Carney, *The ORNL Engineering-Economic Model of Residential Energy*, ORNL/CON-24, Oak Ridge National Laboratory, Oak Ridge, Tennessee, 1978.

ICF, Inc., "Summary of ICF Input Assumptions for the Base Case Scenario Forecasts for Alternative Regional Coal Development," October 1980, unpublished.

J. R. Jackson, et al., *The Commercial Demand for Energy: A Disaggregated Approach*, ORNL/CON-15, Oak Ridge National Laboratory, Oak Ridge, Tennessee, 1978.

Dale W. Jorgenson, "Investment Behavior and the Production Function," *Bell Journal of Economics and Management Science* (Spring): 220-248, 1972.

Joseph R. Kalt, "Technological Change and Factor Substitution in the United States: 1929-1967," *International Economic Review* 19 (October): 761-775, 1978.

C. J. Lee, "Cobb-Douglas Production Function and Vintage Model of Basic Conversion Process," 1980, unpublished.

A. S. Manne, "ETA: A Model for Energy Technology Assessment," *Bell Journal of Economics* 7 (Autumn): 380, 1976.

M. Nerlove, "Recent Empirical Studies of the CES and Related Production Functions," pp 55-122 in *The Theory and Empirical Analyses of Production: Studies in Income and Wealth*, Vol. 32 (M. Brown, Ed.), Columbia University Press, New York, 1967.

E. M. Oblow, *Mathematical Foundations of LEAP*, ORNL/TM-7566, Oak Ridge National Laboratory, Oak Ridge, Tennessee, 1981, forthcoming.

Resource Planning Associates (Ed.), *Proceedings of the Rate Design Study Regional Conferences*, Electric Power Research Institute, Palo Alto, California, October 1980.

SRI International, *Fuel and Energy Price Forecasts*, Prepared for the Electric Power Research Institute, SRI International, Menlo Park, California, 1977.

L. Stewart and M. Goldstein, "Input Parameters for LEAP and Analysis of the Model 22C Data Base," 1981, forthcoming.

Systems Development Corporation, "Synfuels Commercialization Policy Study," September, 1980, unpublished.

L. D. Taylor, "The Demand for Electricity: A Survey," *Bell Journal of Economics* 6 (Spring): 74-110, 1976.

J. L. Trimble, D. E. Stallings, and B. Thomas, *A Conditional Model of Peak and Minimum Loads and the Load Duration Curve for Electricity*, ORNL/NUREG/TM-379, Oak Ridge National Laboratory, Oak Ridge, Tennessee, 1980.

U.S. Department of Energy, Energy Information Administration, *Annual Report to Congress*, Volume 3, Chapter 5, DOE/EIA-0173/3, 1979.

C. R. Weisbin, R. W. Peelle, and A. S. Loebl, *An Approach to Comprehensive Evaluation of Energy-Economic Models*, ORNL/TM-7572, Oak Ridge National Laboratory, Oak Ridge, Tennessee, 1981, forthcoming.

U.S. Department of Energy, Office of Energy Information Validation, "Analysis Quality Report: 1978 ARC Long-Term Forecasts," 1980.

APPENDICES

APPENDIX A

LEAP MODEL 22c
RESOURCE EXTRACTION PROCESSES

Resource	Processes
Coal	Western Coal, Low Sulfur Western Coal, Medium-High Sulfur Mid-Continent Coal Appalachian Coal, Medium-High Sulfur Appalachian Coal, Low Sulfur Appalachian Premium Coal (metallurgical coal only)
Oil	Alaska Oil (North Slope & Southern Alaska) Enhanced Recovery Crude (gas flooding, steam drive, insitu combustion, chemical flooding) Other Domestic Crude Shale Oil Mining & Retort
Gas	Alaskan Gas (North Slope & Southern Alaska) Enhanced Recovery Gas (tight sands, Denovean shale, etc.) Other Domestic Gas
Uranium	Uranium Mining and Milling

APPENDIX B

LEAP MODEL 22c
CONVERSION PROCESSES

RESIDENTIAL SECTOR

Process Name	Energy Input	Output To
Oil (+LPG) Heater	Light Oil	Space & Water Heat
Gas Heater	Gas	Space & Water Heat
Electric Heater	Electicity	Space & Water Heat
Solar Heat	--	Space & Water Heat
Space Cool	Electricity	Residential Demand
Cooking & Other Electric	Electricity	Cooking and Other
Cooking & Other Gas	Gas	Cooking and Other
Distributed Photo Volt, Wind, etc.	--	Electric Services
Lighting, Freezers, Refrigerators	Electricity	Residential Demand

COMMERCIAL SECTOR

Process Name	Energy Input	Output To
Light Oil Heater	Light Oil	Heat & Hot water
Heavy Oil Heater	Heavy Oil	Heat & Hot water
Gas Heater	Gas	Heat & Hot water
Electric Heater	Electricity	Heat & Hot water
Solar Heater (and Geothermal)	--	Heat & Hot water
Electric Cool	Electricity	Cooling
Solar Cool	--	Cooling
Lighting, Appliances	Electricity	Commerical Demand
Other Electric (Machines)	Electricity	Commerical Demand
Other Gas (cooking)	Gas	Commerical Demand

INDUSTRIAL SECTOR

Process Name	Energy Input	Output To
Direct Heat-Oil	Oil	Direct Heat
Direct Heat-Gas	Gas	Direct Heat
Low-Btu Gas-Direct Heat	Coal	Direct Heat
Direct Heat-Coal	Coal	Direct Heat
Indirect Heat-Heavy Oil	Heavy Oil	Indirect Heat
Indirect Heat-Gas	Gas	Indirect Heat

INDUSTRIAL SECTOR (Continued)

Process Name	Energy Input	Output To
Low-Btu Gas-Indirect Heat	Coal	Indirect Heat
Indirect Heat-Coal	Coal	Indirect Heat
Atmospheric Fluidized Bed	Coal	Indirect Heat
Solar Indirect Heat (Oil Backup)	Heavy Oil	Indirect Heat
Electric Heat Pump	Electricity	Indirect Heat
Geothermal	--	Indirect Heat
Electric Auto-Generation (A)[1]	Coal	Electric Services
Electric Auto-Generation (B)[1]	Light oil	Electric Services
Electric Auto-Generation (C)[1]	Gas	Electric Services

TRANSPORTATION SECTOR

Process Name	Energy Input	Output To
Aircraft & Military	Light Oil	Transportation Demand
Automobile (Oil)	Light Oil	Vehicle Miles Allocator
Automobile (Electric)	Electricity	Vehicle Miles Allocator
Truck/Bus Diesel	Light Oil	Industrial Demand
Rail/Barge and other Freight	Freight Fuel[2]	Industrial Demand

ELECTRICITY SECTOR

Process Name	Energy Input	Output To
Conventional Nuclear (LWR)	Uranium	Electricity
Advanced Nuclear (Breeder)	Uranium	Electricity
Coal Boiler	Coal	Electricity
Low-Medium Btu Gas with Combined Cycle	Coal	Electricity Electricity
Atmospheric Fluidized Bed	Coal	Electricity
Magneto-Hydrodynamic	Coal	Electricity
Oil Boiler	Heavy Oil	Electricity
Oil Turbine	Light Oil	Electricity
Fuel Cell Oil	Light Oil	Electricity

[1]Three forms of within-sector electrical generation take place in the industrial sector. The fuel mixture is determined in an allocation step and generation is performed in a single conversion step.

[2]A mixture of light and heavy oil (from an allocation step).

ELECTRICITY SECTOR (Continued)

Process Name	Energy Input	Output To
Gas Boiler	Gas	Electricity
Gas Turbine	Gas	Electricity
Biomass	--	Electricity
Central Renewables	--	Electricity
Electric Power Loading	Electricity	Electricity to Distribution

COAL SECTOR

Process Name	Energy Input	Output To
Western Liquids, Low-Sulfur	Western Coal, Low Sulfur	Coal Liquid
Western Liquids, Medium-High Sulfur	Western Coal, Medium-High Sulfur	Coal Liquid
Mid-Continent Liquids	Mid Continent Coal	Coal Liquid
Appalachian Liquids, Medium-High Sulfur	Appalachian Coal, Medium-High Sulfur	Coal Liquid
Western High BTU Gas, Low Sulfur	Western Coal, Low Sulfur	High BTU Syn Gas (thru Transport)
Western High BTU Gas, Medium-High Sulfur	Western Coal Medium-High Sulfur	High BTU Syn Gas (thru Transport)
Mid-Continent, High BTU Gas	Mid Continent Coal	High BTU Syn Gas (thru Transport)
Appalachian High BTU Gas Medium-High Sulfur	Appalachian Coal, Medium-High Sulfur	High BTU Syn Gas (thru transport)
Transport	Western High BTU Gas, Low Sulfur	High BTU Syn Gas
Transport	Western High BTU Gas, Medium-High Sulfur	High BTU Syn Gas
Transport	Mid-Continent High BTU Gas	High BTU Syn Gas
	Appalachian High BTU Gas, Medium-High Sulfur	High BTU Syn Gas

OIL/GAS SECTOR

Process Name	Energy Input	Output To
Oil Refining	Crude Oil	Refined Oil (an allocation process)
Transport	Alaskan Gas	Dry Gas
Transport	Enhanced Recovery Gas	Dry Gas
Transport	Other Domestic Gas	Dry Gas
Transport	Imported Gas	Dry Gas
Transport	Shale Oil Mining & Retort	Crude Oil
Transport	Alaskan Oil	Crude Oil

DISTRIBUTION SECTOR

Process Name	Energy Input	Output To
Electric Line Loss	Electricity	Electricity
Metalurgical Coal Transport	High Quality Coal	Industrial Demand

NUCLEAR SECTOR

Process Name	Energy Input	Output To
Transport/Enrichment	Uranium	Uranium Fuel (electricity Sector)

APPENDIX C

LEAP MODEL 22c
FINAL DEMAND PROCESSES AND SPECIFIC USES

Final Demand Process	Specific Uses
Residential Demand	Space and Water Heat Space Cool Lighting, Freezers, Refrigerators Cooking and Other
Commercial Demand	Heat and Hot Water Cooling Lighting, Appliances Other Electric (Machines) Other Gas (Cooking)
Industrial Demand	Direct Heat Indirect Heat Electric Services Feedstock Metallurgical Coal Heavy Oil Transport (Truck/Bus) Transport (Rail/Barge/Freight)
Transportation Demand	Passenger Miles (Aircraft & Military) Vehicle Miles (Automobile)

APPENDIX D

LEAP MODEL 22c
ALLOCATION PROCESSES

RESIDENTIAL SECTOR

Process Name	Suppliers	Demanders
Space and Water Heat	Oil Heater Gas Heater Electric Heater Solar Heater	Residential Demand
Electric Services	Distributed Photo Volt, Wind, etc. Electricity (From Allocation Process)	Lighting, Freezers, Refrigerator
Cooking and Other	Cooking & Other Electric Cooking & Other Gas	Residential Demand
Gas	Gas from Distribution	Gas Heater Cooking & Other Gas

COMMERCIAL SECTOR

Process Name	Suppliers	Demanders
Heat and Hot Water	Light Oil Heater Heavy Oil Heater Gas Heater Electric Heater Solar Heat (and Geothermal)	Commercial Demand
Cooling	Electric Cool Solar Cool	Commercial Demand
Electric Services	Distributed Photo, Volt, wind, etc. Electricity (from allocation process)	Lighting, Appliances
Gas	Gas from Distribution	Gas Heater Other Gas

COMMERCIAL SECTOR (Continued)

Process Name	Suppliers	Demanders
Electric	Electricity from Distribution	Electric Heater Electric Cool Electric Services Other Electric, (Machines)

INDUSTRIAL SECTOR

Process Name	Suppliers	Demanders
Direct Heat	Direct Heat, Oil Direct Heat, Gas Low BTU Gas Direct Heat Direct Heat, Coal	Industrial Demand
Indirect Heat	Indirect Heat, Heavy Oil Indirect Heat, Gas Low BTU Gas Indirect Heat Indirect Heat, Coal Atmospheric Fluidized Bed Solar (Oil Backup) Electric Heat Pump	Industrial Demand (through indirect Heat, Geothermal)
Indirect Heat-Geothermal	Geothermal Indirect Heat	Industrial Demand
Feed Stock	Natural Gas Liquids Gas Light Oil	Industrial Demand
Electric Generator	Light Oil Gas Coal	Electric Services (through Electric Auto Generation)
Electric Services	Electricity from Allocation Electric Auto Generation	Industrial Demand
Light Oil	Light Oil from Distribution	Industrial Demand
Heavy Oil	Heavy Oil from Distribution	Indirect Heat, Heavy Oil Solar (Oil Backup) Industrial Demand

INDUSTRIAL SECTOR (continued)

Process Name	Suppliers	Demanders
Gas	Gas from Distribution	Direct Heat, Gas Indirect Heat, Gas Electric Generation Feedstock
Coal	Coal from Distribution	Low BTU Gas, Direct Heat Direct Heat, Coal Indirect Heat, Coal Atmospheric Fluidized Bed Electric Generation Low BTU Gas, Indirect Heat
Electric	Electricity from Distribution	Electric Heat Pump Electric Services

TRANSPORTATION SECTOR

Process Name	Suppliers	Demanders
Vehicle Miles	Automobile (oil) Automobile (electric)	Transportation Demand
Frieght Fuel	Heavy Oil from Distribution Light Oil from Allocation	Rail/Barge and Other Freight
Light Oil	Light Oil from Distribution	Aircraft & Military Automobile (Oil) Truck/Bus Diesel Freight Fuel

OIL/GAS SECTOR

Process Name	Suppliers	Demanders
Crude Oil	Alaskan Oil (thru transport)	Oil Refining (thru synthetic crude allocator)

OIL/GAS SECTOR (Continued)

Process Name	Suppliers	Demanders
	Shale Oil Mining & Retort (thru transport) Enhanced Recovery Crude Other Domestic Crude Imported Crude	
Synthetic Crude	Synthetic Crude from Coal Sector Crude Oil	Oil Refining
Dry Gas	Alaskan Gas (thru transport) Enhanced Recovery Gas (thru transport) Other Domestic Gas (thru transport) Imported Gas (thru Transport)	Distribution (thru sythetic Gas allocator)
Synthetic Gas	Synthetic Gas from Coal Sector Dry Gas	Distribution
Refined Oil	Oil Refining	Heavy Oil to Distribution Light Oil to Distribution Natural Gas Liquids to Distribtion

DISTRIBUTION SECTOR

Process Name	Suppliers	Demanders
Light Oil Distribution	Refined Oil Allocator	Residential Secotor Commercial Sector Industrial Sector Transportation Sector Electricity Sector

DISTRIBUTION SECTOR (Continued)

Process Name	Suppliers	Demanders
Heavy Oil Distribution	Refined Oil Allocator	Commercial Sector Industrial Sector Transportation Sector Electricity Sector
Gas Distribution	Dry Gas (thru synthetic Gas Allocator)	Residential Sector Commercial Sector Industrial Sector Electricity Sector
Electricity Distribution	Electricity (from electric power loading)	Residential Sector Commercial Sector Industrial Sector Transportation Sector
Coal Distribution	Coal Allocator (from coal sector)	Industrial Sector Electricity Sector

ELECTRICITY SECTOR

Process Name	Suppliers	Demanders
Electricity	Conventional Nuclear Advanced Nuclear Coal Boiler Low-Medium BTU Gas with combined cycle Atmospheric Fluidized Bed Magneto-Hydrodynamic Oil Boiler Oil Turbine Fuel Cell Oil Gas Boiler Gas Turbine Biomass Central Renewables	Electric Power Loading (to distribution)

COAL SECTOR

Process Name	Suppliers	Demanders
Coal Allocator	Western Coals, Low Sulfur Western Coal, Medium-High Sulfur Mid-Continent Coal Appalachian Coal, Medium-High Sulfur Appalachian Coal, Low Sulfur	Coal Distribution
Coal Liquid Allocator	Western Liquids, Low Sulfur Western Liquids, Medium-High Sulfur Mid-Continent Liquids Applachian Liquids, Medium-High Sulfur	Sythetic Crude Allocator-Oil/Gas Sector
High BTU Syn Gas Allocator	Western High BTU Gas, Low Sulfur (thru transport) Western High BRU Gas, Medium-High Sulfur (thru transport) Mid-Continent High BTU Gas (thru transport) Appalachian High BTU Gas, Medium-High Sulfur (thru transport)	Sythetic Gas Allocator (Oil/Gas Sector)
High Quality Coal	Appalachian Medium High Sulfur Coal Appalachian Premium Coal Appalachian Low Sulfur Coal (thru allocator)	Coal Distribution Exports (specified exogenously)
Appalachian Low Sulfur Coal Allocator	Appalachian Low Sulfur Coal	Coal Allocator High Quality Coal
Western Low Sulfur Coal Allocator	Western Low Sulfur Coal	Coal Allocator Western Liquids, Low Sulfur Western High BTU Gas, Low Sulfur

COAL SECTOR (continued)

Process Name	Suppliers	Demanders
Western Medium-High Sulfur Coal Allocator	Western Medium-High Sulfur Coal	Coal Allocator Western Liquids Medium-High Sulfur Western High BTU Gas, Medium-High Sulfur
Mid Continent Coal Allocator	Mid Continent Coal	Coal Alocator Mid Continent Liquids Mid Continent High BTU Gas
Appalachian Medium-High Sulfur Coal Allocator	Appalachian Medium-High Sulfur Coal	Coal Allocator Appalachian Liquids Medium-High Sulfur Appalachian High BTU Gas Medium-High Sulfur

APPENDIX E

The following flow diagrams for LEAP Model 22C are drawn from Alsmiller, R. G., et al., *Interim Report on Model Evaluation Methodology and the Evaluation of LEAP* (DRAFT) (Oak Ridge, Tenn.: Oak Ridge National Laboratory, April 1980), pp. III-7 through III-16.

ORNL-DWG 80-7672

LEAP MODEL 22 INTERSECTORAL LINKS

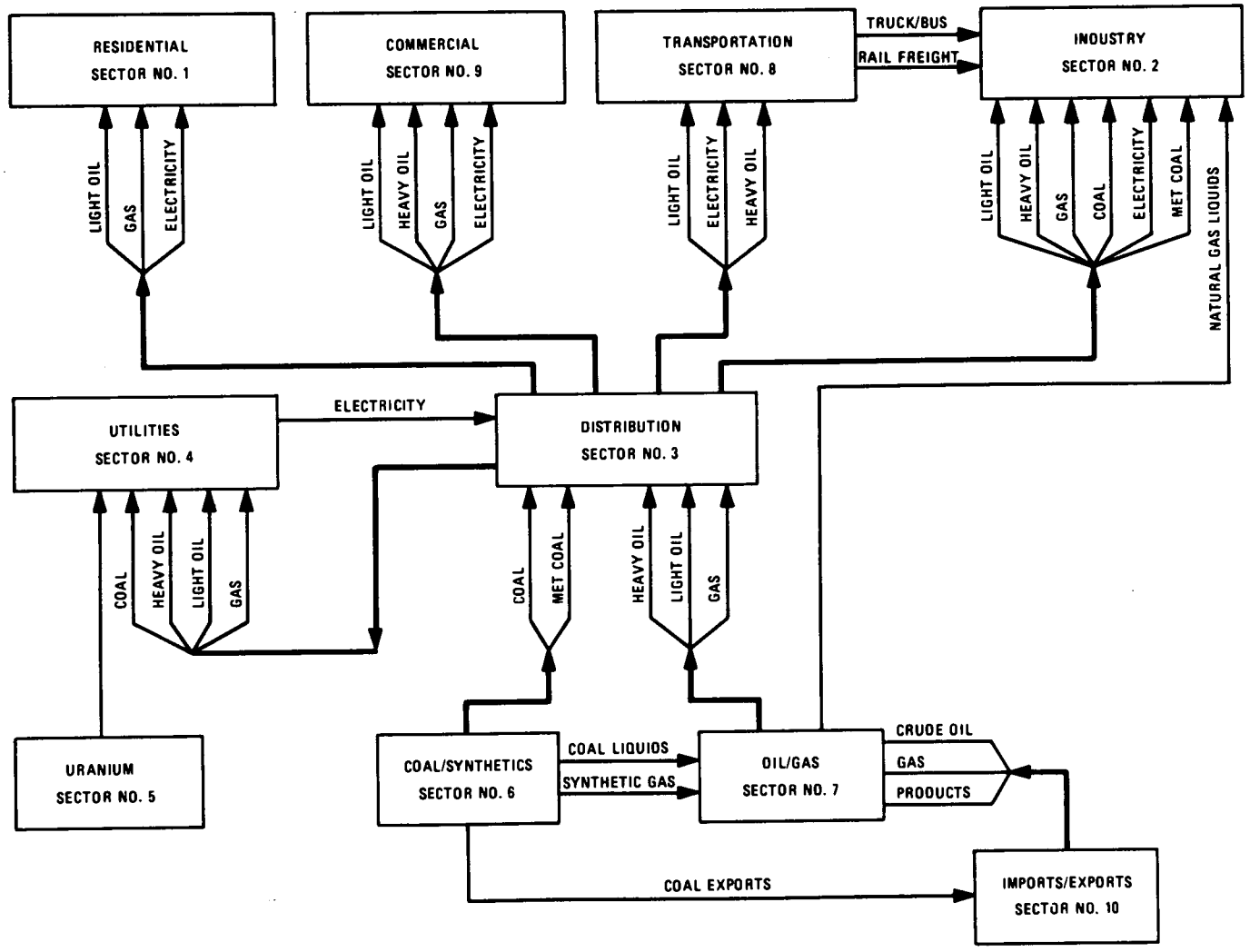

ORNL-DWG 80-7671

MODEL 22 RESIDENTIAL SECTOR (NO. 1)

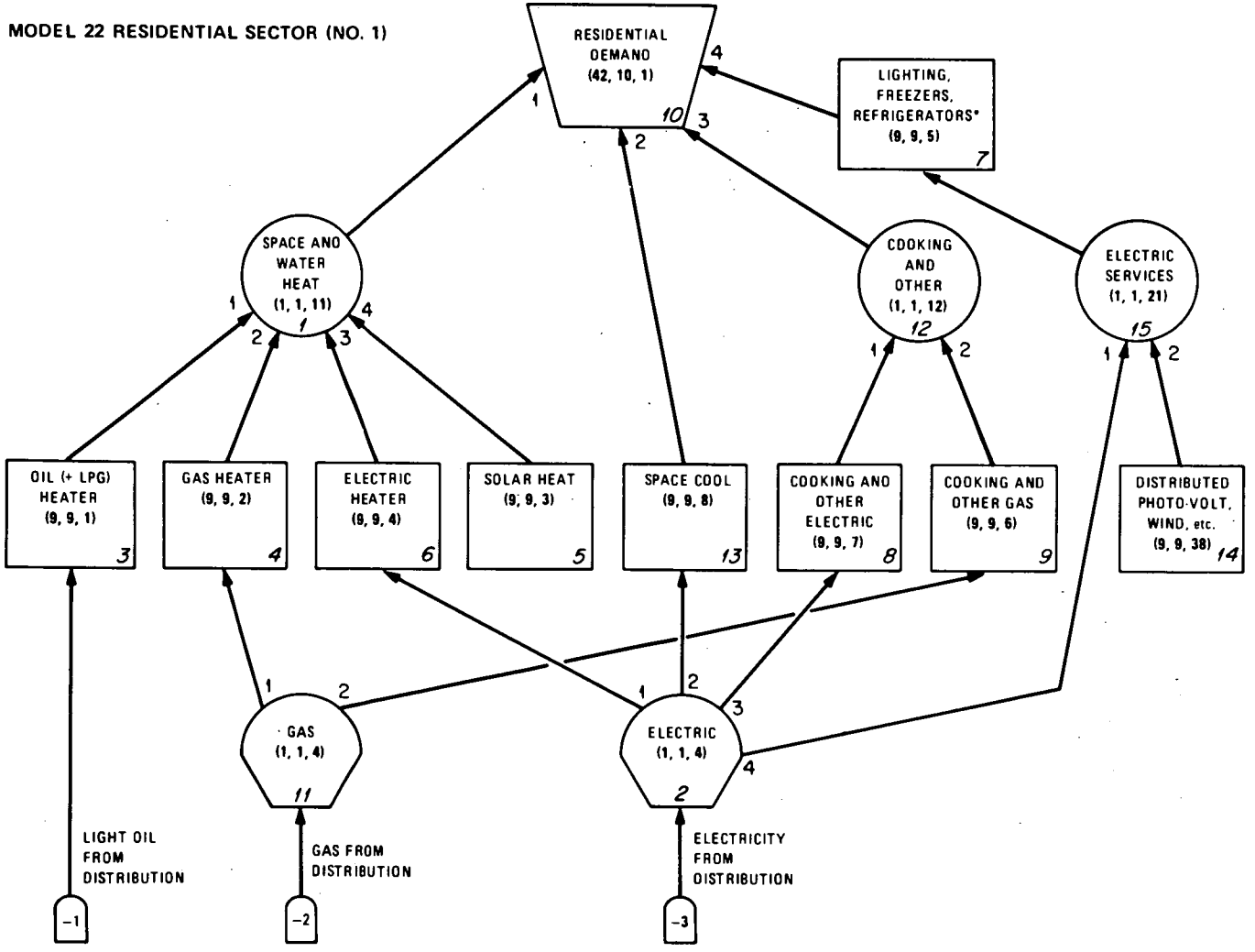

ORNL DWG 80-7670R

MODEL 22 INDUSTRIAL SECTOR (NO. 2)

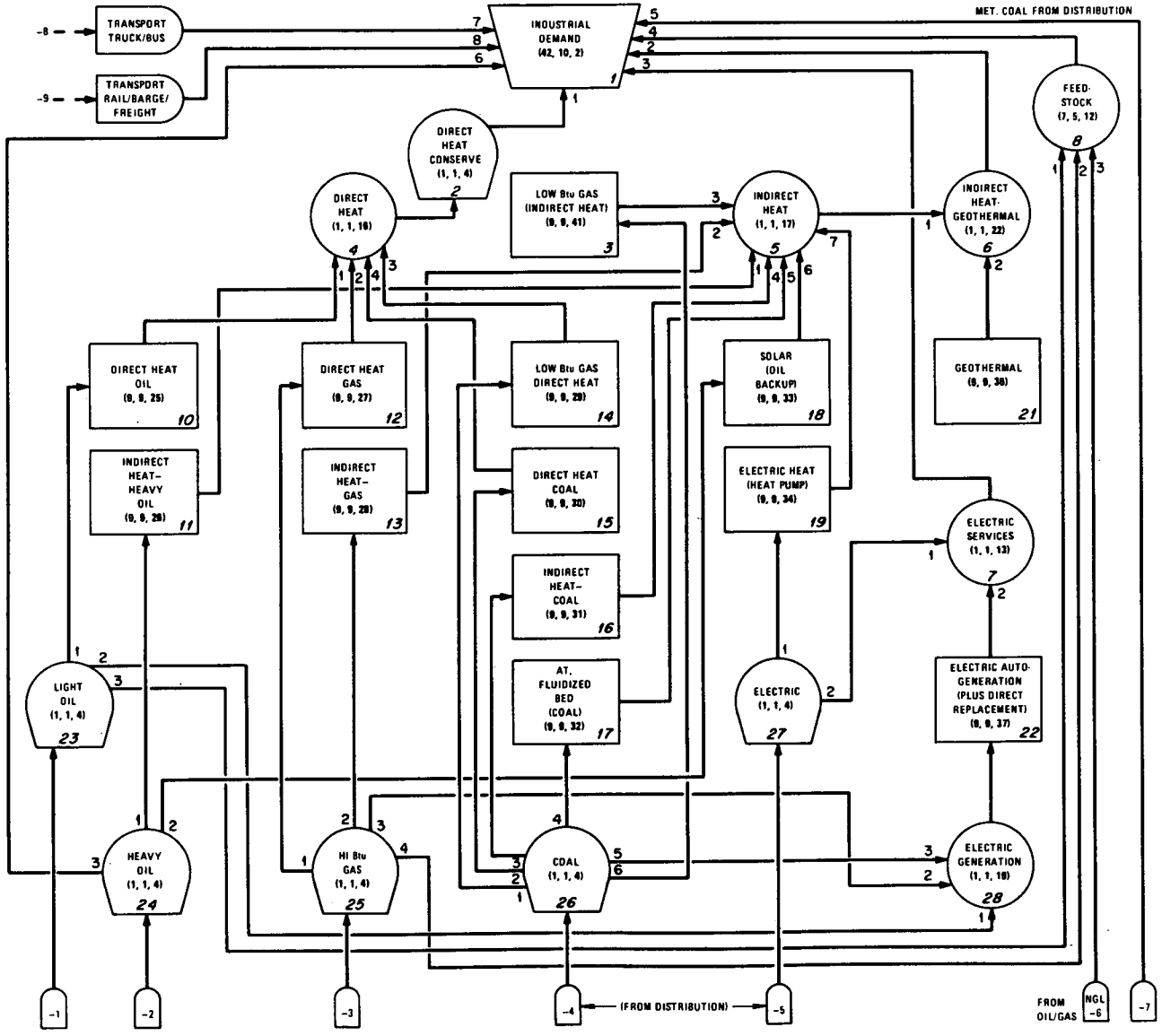

ORNL–DWG 80-7669

MODEL 22 DISTRIBUTION SECTOR (NO. 3)

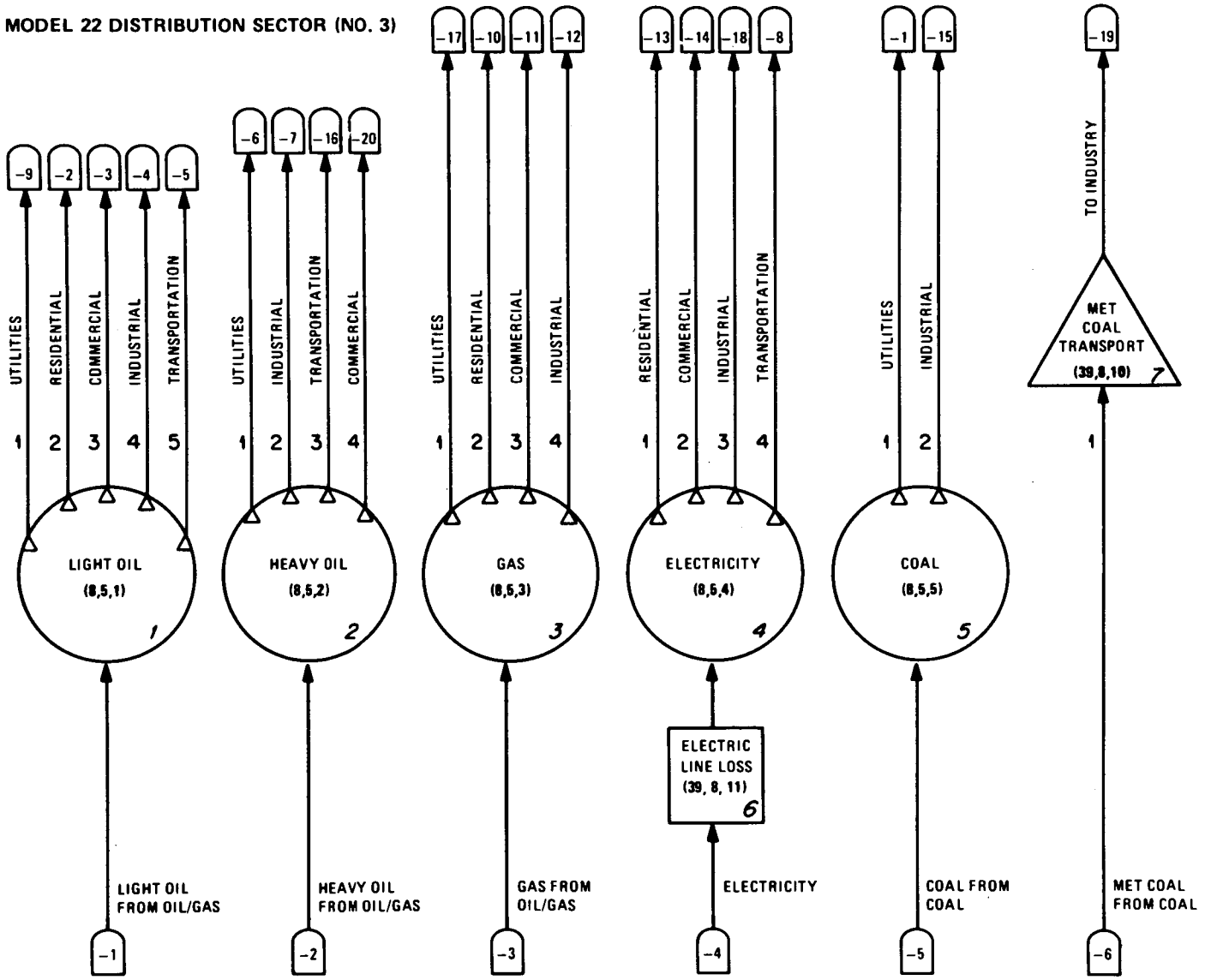

ORNL-DWG 80-7655

MODEL 22 ELECTRICITY SECTOR (NO. 4)

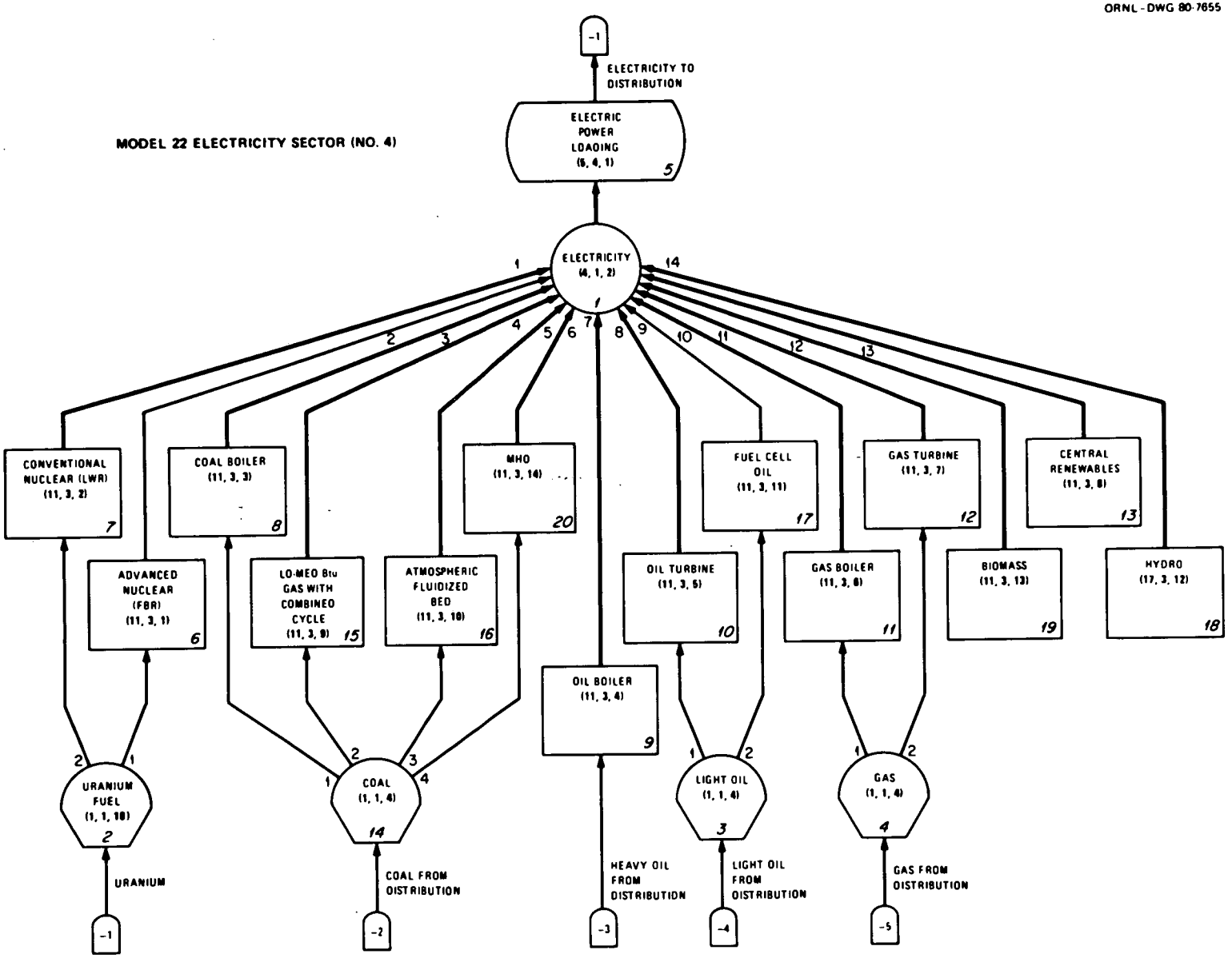

MODEL 22 NUCLEAR SECTOR (NO. 5)

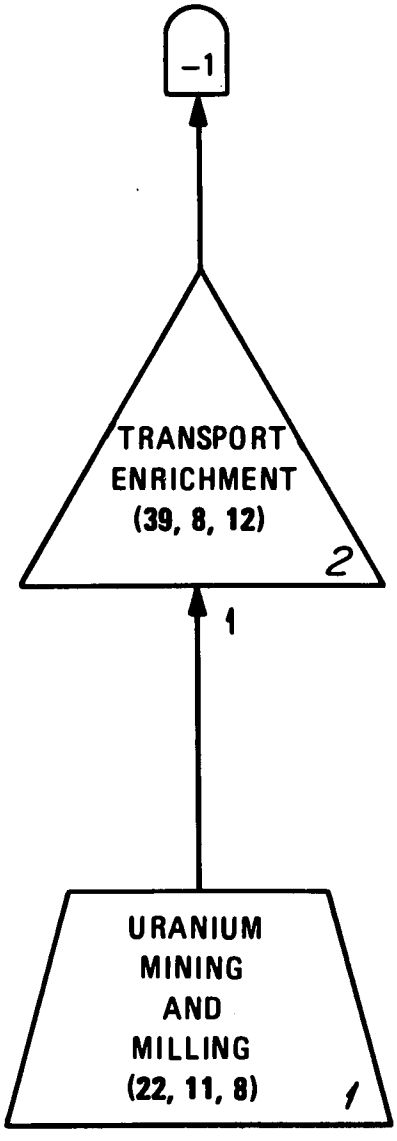

ORNL-DWG 80-7676 R

MODEL 22 COAL SECTOR (NO. 6)

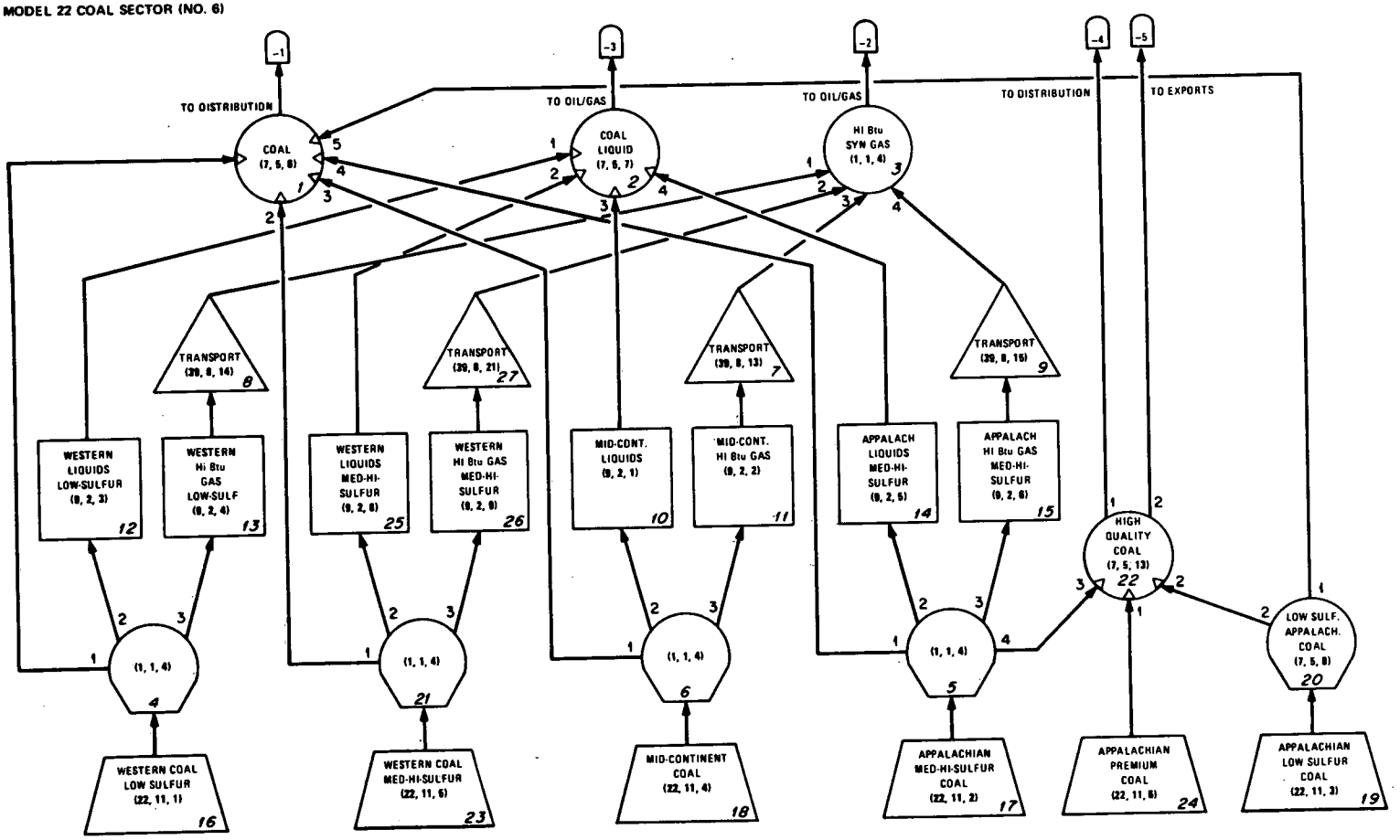

ORNL-DWG 80-7875R

MODEL 22 OIL/GAS SECTOR (NO. 7)

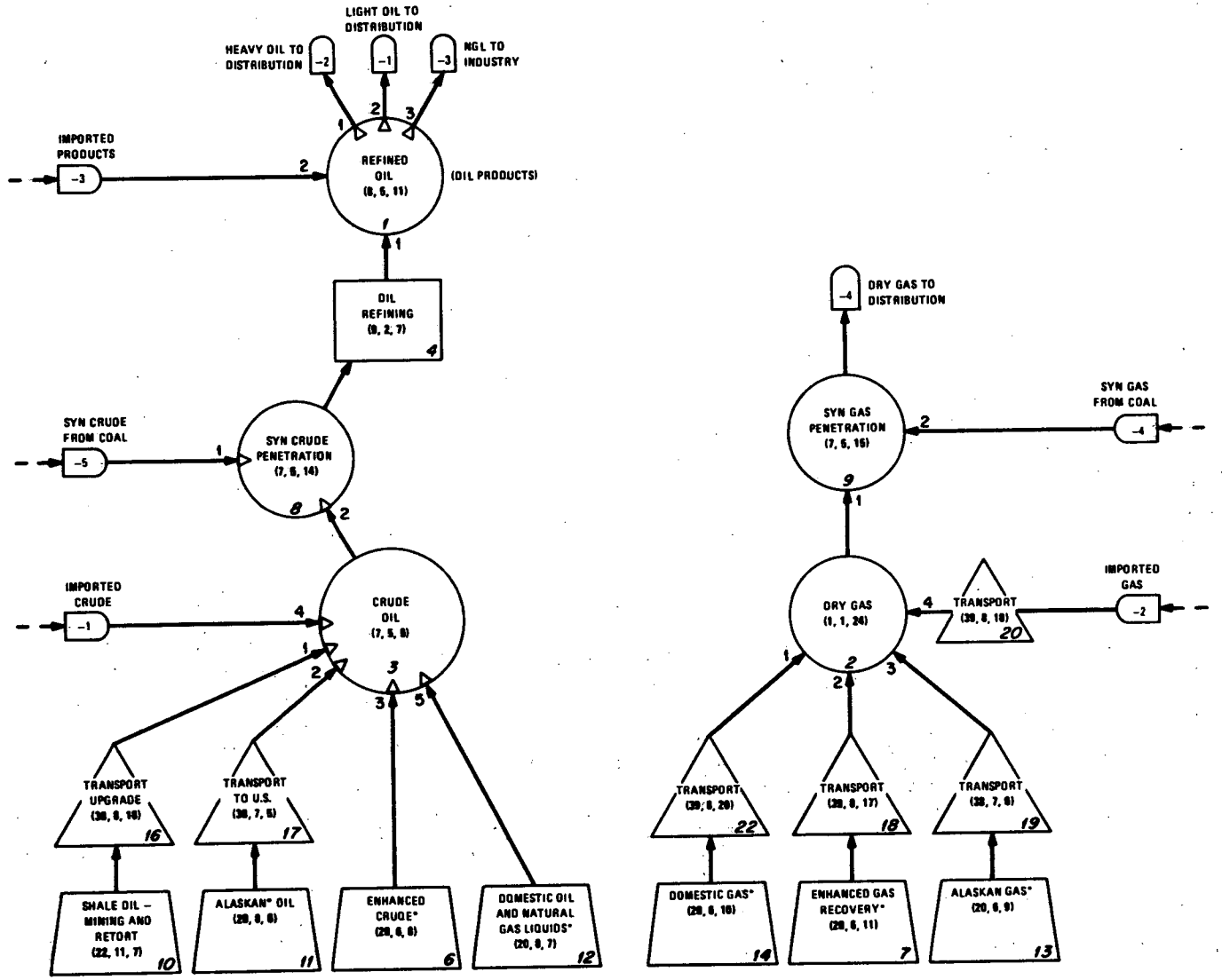

ORNL–DWG 80-7674

MODEL 22 TRANSPORTATION SECTOR (NO. 8)

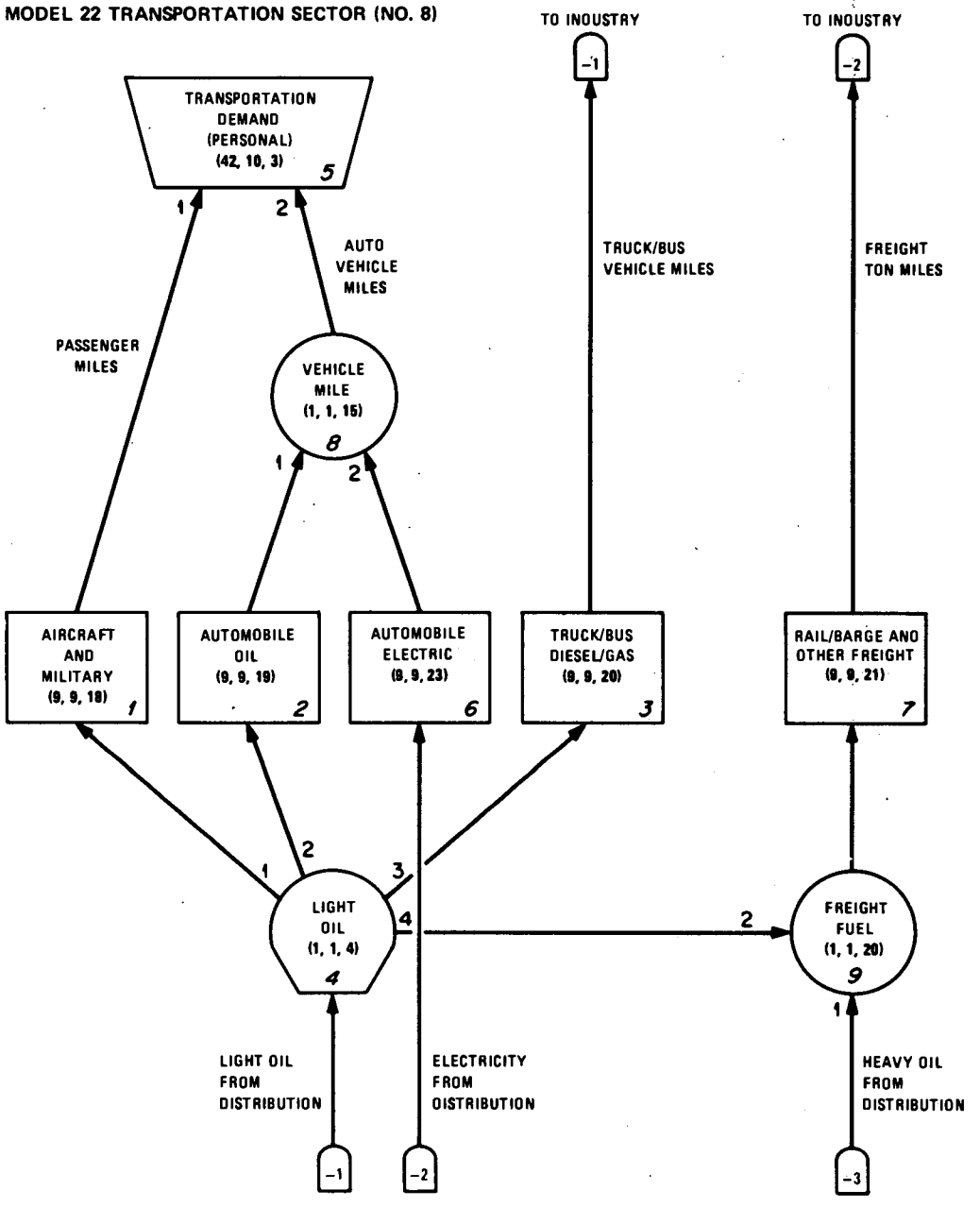

ORNL-DWG 80-7673R

MODEL 22 COMMERCIAL SECTOR (NO. 9)

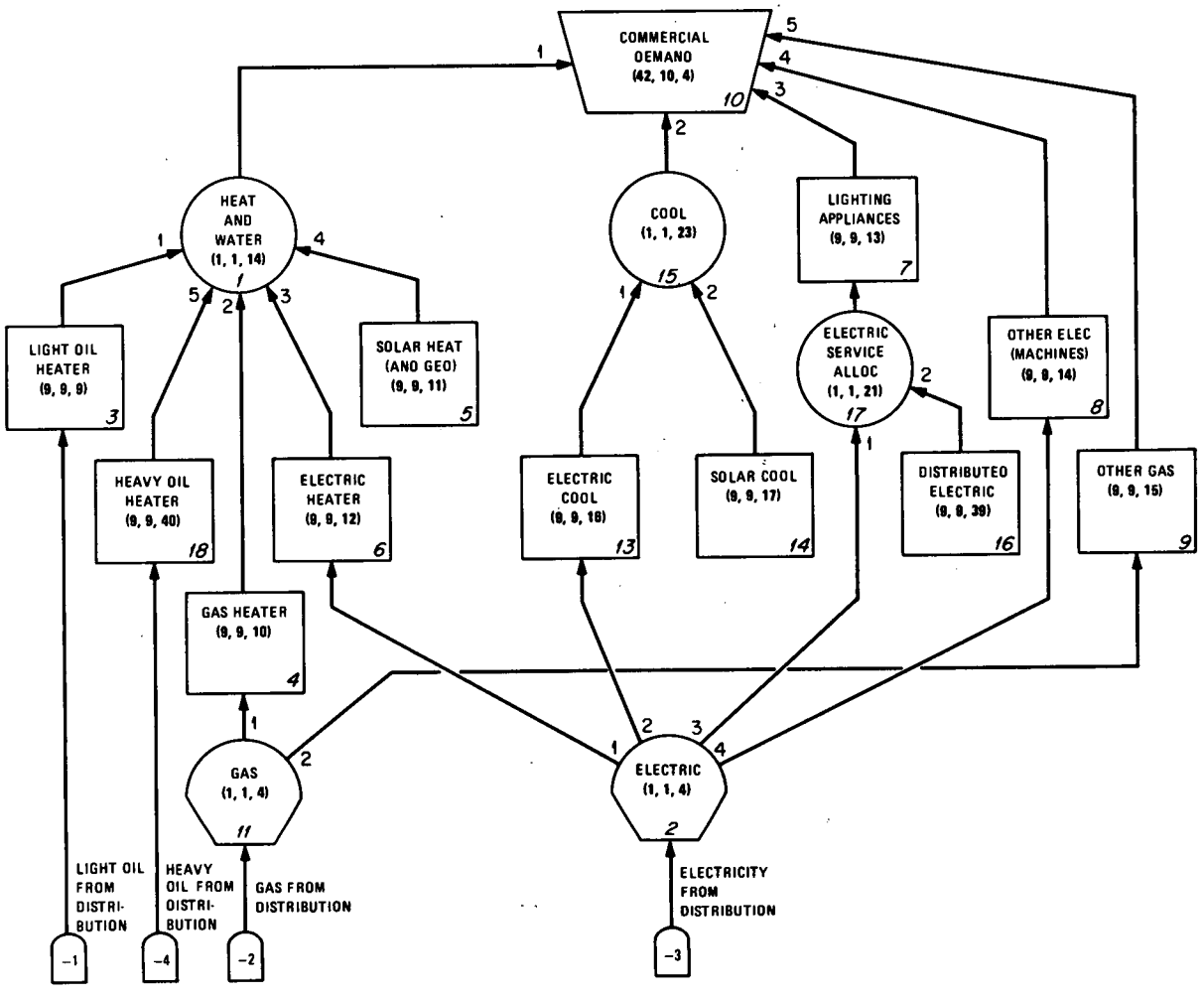

ORNL–DWG 80-7677

MODEL 22 IMPORTS/EXPORTS SECTOR (NO. 10)

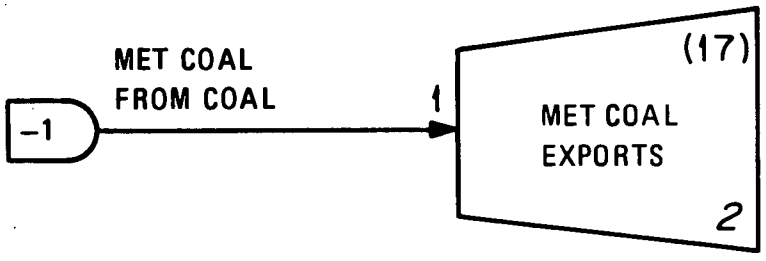

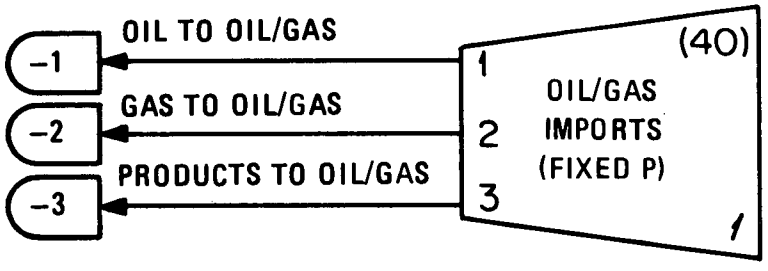

ORNL-5748
Special

INTERNAL DISTRIBUTION

1-2. L. S. Abbott
3. R. G. Alsmiller, Jr.
4. F. S. Alsmiller
5. S. J. Auerbach
6. J. Barhen
7. J. Barish
8. D. E. Bartine
9. M. A. Bjerke
10. D. Bjornstad
11. D. G. Cacuci
12. S. Cantor
13. G. de Saussure
14. D. J. Downing
15-39. EPIC
40. G. F. Flanagan
41. T. B. Fowler
42. W. E. Ford, III
43. W. Fulkerson
44. D. A. Gardiner
45. D. Gilai
46. H. Goldstein (Consultant)
47. M. Goldstein
48. D. Greene
49. P. M. Haas
50. E. Halbert
51. M. C. G. Hall
52. L. Hill
53. E. Hirst
54. J. Horwedel
55. D. T. Ingersoll
56. J. M. Kallfelz
57-66. A. S. Loebl
67. J. L. Lucius
68. B. J. Jacobs
69. F. C. Maienschein
70. J. J. Manning
71. J. H. Marable
72. B. F. Maskewitz
73. B. D. Murphy
74. D. Nguyen
75. E. M. Oblow
76. J. V. Pace
77. S. C. Parikh
78. C. V. Parks
79-88. R. W. Peelle
89. F. G. Perey
90. R. B. Perez
91. R. Pevey
92. Y. Ronen
93. M. W. Rosenthal
94. R. W. Roussin
95. R. T. Santoro
96. D. L. Selby
97. R. Sharma
98. L. Stewart
99. C. Thomas
100. B. C. Toney
101. J. Trimble
102. D. K. Trubey
103. D. R. Vondy
104. E. Wacholder
105. J. J. Wagschal
106. C. F. Weber
107-116. C. R. Weisbin
117. L. W. Weston
118. J. R. White
119. G. E. Whitesides
120. T. J. Wilbanks
121. M. L. Williams
122. R. Q. Wright
123. A. Zucker
124. P. Greebler (Consultant)
125. H. J. C. Kouts (Consultant)
126. W. B. Loewenstein (Consultant)
127. R. Wilson (Consultant)
128-129. Central Research Library
130. ORNL Y-12 Technical Library - Document Reference Section
131. Laboratory Records
132. ORNL Patent Office
133. Laboratory Records - RC

EXTERNAL DISTRIBUTION

134. Office of Assistant Manager for Energy Research and Development, DOE-ORO, Oak Ridge, TN 37830

135. R. L. Basmann, Department of Economics, Texas A&M University, College Station, Texas 77843

136. M. Becker, Dept. of Nuclear Engineering, Rensselaer Polytechnic Institute, Tibbets Avenue, Troy, NY 12181

137. D. J. Beecy, Acting Director, Division of Policy & Strategic Planning, Office of Fossil Energy, MS C-125, U. S. Department of Energy, Washington, DC 20545

138. W. G. Bentley, Florida Power and Light Company, P.O. Box 529100, Miami, FL 33152

139. T. E. Browne, Energy Supply Studies Program, Electric Power Research Institute, P.O. Box 10412, Palo Alto, CA 94303

140. D. Cato, Office of Energy Information, U. S. Dept. of Energy, Federal Building, 12th and Pennsylvania Avenue, NW, Washington, DC 20461

141. E. Cazalet, Decision Focus, Incorporated, 5 Palo Alto Square, Suite 410, Palo Alto, CA 94303

142. R. Gene Clark, Office of Energy Information, U. S. Department of Energy, Federal Building, 12th and Pennsylvania Avenue, NW Washington, DC 20461

143. S. Cohen, Energy Information Administration, U. S. Dept. of Energy, 12th and Pennsylvania Ave. NW Washington, DC 20461

144. Charles Cook, Office of Energy Information, U. S. Department of Energy, Federal Building, 12th and Pennsylvania Avenue, NW, Washington, DC 20461

145. C. Cornett, Energy Information Administration, U. S. Department of Energy, 12th and Pennsylvania Ave., NW, Washington, DC 20461

146. C. W. Craven, Science Applications, Inc., 800 Oak Ridge Turnpike, Building C, Suite 100, Oak Ridge, TN 37830

147. Robert Crockett, Energy Information Administration, U. S. Department of Energy, 12th and Pennsylvania Ave., NW, Washington, DC 20461

148. Ned Dearborn, Energy Information Administration, U. S. Department of Energy, 12th and Pennsylvania Ave., NW, Washington, DC 20461

149. L. E. DeSimone, San Diego Gas & Electric Company, P.O. Box 1831, San Diego, CA 92112

150. R. C. Diehl, Aerojet Energy Conversion Co., P.O. Box 13222, Sacramento, CA, 95813

151. Mitchell Durst, Office of Energy Information, U. S. Department of Energy, Federal Building, 12th and Pennsylvania Avenue, NW, Washington, DC 20461

152. Energy Systems Library, Brookhaven National Laboratory, Building 475, Upton, Long Island, NY 11973

153. R. T. Eynon, Office of Energy Information, U.S. Department of Energy, Federal Building, 12th and Pennsylvania Avenue, NW, Washington, DC 20461

154. J. Eyster, Office of Energy Information Validation, U.S. Department of Energy, Federal Building, 12th and Pennsylvania Avenue, NW, Washington, DC 20461

155. R. C. Fair, Department of Economics, Yale University, 206 Elm Street, New Haven, Connecticut 06520

156. J. Finucane, Office of Energy Information Validation, U.S. Department of Energy, 12th and Pennsylvania Avenue, NW, Washington, DC 20461

157. A. Ford, Los Alamos Scientific Laboratory, P.O. Box 1663, Los Alamos, NM, 87545

158. D. Freedman, Professor of Statistics, University of California, Berkeley, CA 94708

159. S. I. Gass, College of Business and Management, University of Maryland, College Park, Maryland 20742

160. Donald Gantzer, U.S. Department of Energy, Federal Building, Room 4447, 12th and Pennsylvania Avenue, Washington, DC 20461

161. O. Gildersleeve, Electric Power Research Institute, 3412 Hillview Ave., Palo Alto, CA 94303

162. C. R. Glassey, University of California Berkeley, 1163 Keeler Avenue, Berkeley, CA 94708

163. Neil Goldman, Energy Laboratory, Massachusetts Institute of Technology, Cambridge, Massachusetts 02139

164. L. Gordon, Office of Energy Information Validation, Federal Building, 12th and Pennsylvania Avenue, NW, 20461

165. H. J. Greenberg, U. S. Department of Energy, 12th and Pennsylvania Avenue, NW, Washington, DC 20461

166. M. Greenberger, Stanford University Graduate School of Business, Room 383, Stanford, CA 94305

167. E. Greenspan, University of Illinois, Nuclear Engineering Program, 214 Nuclear Engineering Laboratory, Urbana, IL 61801

168. James Gruhl, Energy Model Analysis Program, Model Validation Group, MIT Energy Laboratory, Cambridge, Massachusetts 02138

169. N. Gruhl, 142 Plain Road, Wayland, Massachusetts 01778

170. D. E. Hale, Office of Energy Information Validation, U.S. Department of Energy, 12th and Pennsylvania, NW, Washington, DC 20461

171. John Hansen, Charles River Associates, 200 Clarendon Street, Boston, MASS 02116

172. C. Harris, Center for Management & Policy Research, 1625 "I" Street, NW Washington, DC 20006

173. J. Hausman, Economics Department, E-52, Massachusetts Institute of Technology, Cambridge, MASS 02139

174. W. W. Havens, Columbia University, 520 West 120th Street, New York, NY 10027

175. W. W. Hogan, Harvard University, 79 Boylston Street, Cambridge, MASS 02138

176. Mary Hutzler, Energy Information Administration, 12th and Pennsylvania Avenue, NW, Washington, DC 20461

177. R. H. F. Jackson, Center for Applied Mathematics, U.S. Department of Commerce, National Bureau of Standards, Washington, DC 20234

178. C. W. Kilgore, Energy Information Administration, U.S. Department of Energy, 12th and Pennsylvania Avenue, NW Washington, DC 20461

179. D. Kresge, 53 Church Street, Cambridge, MASS 02138

180. G. M. Lady, Energy Information Administration, U.S. Department of Energy, 12th and Pennsylvania Avenue, NW, Washington, DC 20461

181. Joel Lambert, National Bureau of Standards, Building 101, Washington, DC 20234

182. W. Langley, FJSRL, U.S. Air Force Academy, Colorado Springs, CO 80840

183. C. J. Lee, Department of Economics, Knox College, Galesburg, IL 61401

184. A. Linden, Jr., Energy Information Administration, U.S. Department of Energy, 2000 M Street, Washington, DC 20545

185. T. V. Long, II, University of Chicago, The Committee on Public Policy Studies, 1050 E. 59th Street, Chicago, IL 60637

186. H. McDaniel, Office of Energy Information Validation, U.S. Department of Energy, 12th and Pennsylvania Avenue, NW, Washington, DC 20461

187. M. D. McKay, Los Alamos Scientific Laboratory, P.O. Box 1663, Los Alamos, NM 87545

188. D. L. McNichol, Energy Information Administration, U.S. Department of Energy, 12th and Pennsylvania Avenue, NW, Washington, DC 20461

189. R. H. Males, Director, Energy Systems, Environment and Conservation Division, Electric Power Research Institute, 3412 Hillview Avenue, P.O. Box 10412, Palo Alto, CA 94303

190. R. A. Marshalla, Decision Focus, Inc., 5 Palo Alto Square, Suite 410, Palo Alto, CA 94303

191. J. S. Maybee, University of Colorado, Mathematics Department, Boulder, CO 90309

192. John Mitrisin, Energy Information Administration, U.S. Department of Energy, 12th and Pennsylvania Avenue, NW, Washington, DC 20461

193. Thomas Mooney, Energy Information Administration, U.S. Department of Energy, 12th and Pennsylvania Avenue, NW, Washington, DC 20461

194. G. H. Moore, Center for Energy Studies, University of Texas, Austin, TX 78712

195. T. H. Morlan, Energy Information Administration, U.S. Department of Energy, 12th and Pennsylvania Avenue, NW, Washington, DC 20461

196. F. H. Murphy, Energy Information Administration, U.S. Deparment of Energy, 12th and Pennsylvania Avenue, NW, Washington, DC 20461

197. E. L. Nelson, Energy Information Administration, U.S. Department of Energy, 12th and Pennsylvania Avenue, NW, Washington, DC 20461

198. D. M. Nesbitt, Decision Focus, Inc., 5 Palo Alto Square, Suite 410, Palo Alto, CA 94304

199. David Nissen, Chase Manhattan Bank, 1 Chase Manhattan Plaza, New York, NY 10015

200. E. Oatman, Electric Power Research Institute, 3412 Hillview Avenue, P.O. Box 10412, Palo Alto, CA 94303

201. Richard P. O'Neill, Energy Information Administration, U.S. Department of Energy, 12th and Pennsylvania Avenue, NW, Washington, DC 20461

202. Jerry Peabody, Energy Information Administration, U.S. Department of Energy, 12th and Pennsylvania Avenues, NW, Washington, DC 20461

203. John Pearson, Energy Information Administration, U.S. Department of Energy, 12th and Pennsylvania Avenue, NW, Washington, DC 20461

204. R. Phillips, Decision Focus, Inc., 5 Palo Alto Square, Suite 410, Palo Alto, CA 94303

205. B. Poole, Energy Information Administration, U.S. Department of Energy, 12th and Pennsylvania Avenue, NW, Washington, DC 20461

206. J. Rambo, Lawrence Livermore Laboratory, University of California, Livermore, CA 94550

207. Lillian Regelson, Energy Information Administration, U.S. Department of Energy, 12th and Pennsylvania Avenue, NW, Washington, DC 20461

208. Richard Richels, Electric Power Research Institute, 3412 Hillview Avenue, P.O. Box 10412, Palo Alto, CA 94303

209. Fred S. Roberts, Rutgers University, Department of Mathematics, New Brunswick, NJ 08903

210. M. E. Rodekohr, Energy Information Administration, U.S. Department of Energy, 12th and Pennsylvania Avenue, NW, Washington, DC 20461

211. D. J. Rose, Dept. of Nuclear Engineering, Massachusetts Institute of Technology, Cambridge, MA 02139

212. L. Rubin, Electric Power Research Institute, 3412 Hillview Avenue, P.O. Box 10412, Palo Alto, CA 94034

213. Roy Shanker, Resource Planning Associates, 1901 "L" Street, NW, Washington, DC 20036

214. John B. Shewmaker, Energy Information Administration, U.S. Department of Energy, 12th and Pennsylvania Avenue, NW, Washington, DC 20461

215. Scott Sitzer, Energy Information Administration, U.S. Department of Energy, 12th and Pennsylvania Avenue, NW, Washington, DC 20461

216. C. Smith, Energy Information Validation, U.S. Department of Energy, 12th and Pennsylvania Avenues, NW, Washington, DC 20461

217. James Sweeney, Energy Modeling Forum, Stanford University, Stanford, CA 94305

218. Takashi Takayama, Energy Information Administration, U.S. Department of Energy, 12th and Pennsylvania Avenue, NW, Washington, DC 20461

219. J. E. Todd, Energy Information Administration, U.S Department of Energy, 12th and Pennsylvania Avenue, NW, Washington, DC 20461

220. Noel Uri, Energy Information Administration, U.S. Department of Energy, 12th and Pennsylvania Avenue, NW, Washington, DC 20461

221. J. Weatherly, Institute of Gas Technology, 3424 S. State Street, Chicago, IL 60601

222. A. M. Weinberg, Institute for Energy Analysis, Oak Ridge Associated Universitities, Oak Ridge, TN 37830

223. P. Werbos, Office of Energy Information Validation, U.S. Department of Energy, 12th and Pennsylvania Avenue, NW, Washington, DC 20461

224. D. O. Wood, Energy Laboratory #-38, 418, Massachusetts Institute of Technology, Cambridge, MA 02139

225-228. L. Zutovsky, Energy Information Administration, U.S. Department of Energy, 12th and Pennsylvania Avenues, NW, Washington, DC 20461

229-255. Technical Information Center (TIC)

☆U.S. GOVERNMENT PRINTING OFFICE: 1981-740-062/7