OAK RIDGE NATIONAL LABORATORY LIBRARIES

3 4456 0551913 2

ORNL/TM-7521

ornl

OAK RIDGE NATIONAL LABORATORY

UNION CARBIDE

ANALYSIS OF ENVIRONMENTAL ISSUES RELATED TO SMALL-SCALE HYDROELECTRIC DEVELOPMENT IV: Fish Mortality Resulting From Turbine Passage

Susan C. Turbak
Donna R. Reichle
Carole R. Shriner

ENVIRONMENTAL SCIENCES DIVISION
Publication No. 1597

OAK RIDGE NATIONAL LABORATORY
CENTRAL RESEARCH LIBRARY
CIRCULATION SECTION
4500N ROOM 175
LIBRARY LOAN COPY
DO NOT TRANSFER TO ANOTHER PERSON
If you wish someone else to see this report, send in name with report and the library will charge a loan.

OPERATED BY
UNION CARBIDE CORPORATION
FOR THE UNITED STATES
DEPARTMENT OF ENERGY

Printed in the United States of America. Available from
National Technical Information Service
U.S. Department of Commerce
5285 Port Royal Road, Springfield, Virginia 22161
NTIS price codes—Printed Copy: A07 Microfiche: A01

This report was prepared as an account of work sponsored by an agency of the United States Government. Neither the United States Government nor any agency thereof, nor any of their employees, makes any warranty, express or implied, or assumes any legal liability or responsibility for the accuracy, completeness, or usefulness of any information, apparatus, product, or process disclosed, or represents that its use would not infringe privately owned rights. Reference herein to any specific commercial product, process, or service by trade name, trademark, manufacturer, or otherwise, does not necessarily constitute or imply its endorsement, recommendation, or favoring by the United States Government or any agency thereof. The views and opinions of authors expressed herein do not necessarily state or reflect those of the United States Government or any agency thereof.

ORNL/TM-7521
Dist. Category UC-97e

Contract No. W-7405-eng-26

ANALYSIS OF ENVIRONMENTAL ISSUES RELATED TO SMALL-SCALE HYDROELECTRIC DEVELOPMENT

IV: Fish Mortality Resulting From Turbine Passage[1]

Susan C. Turbak[2], Donna R. Reichle[2], and Carole R. Shriner[2]

ENVIRONMENTAL SCIENCES DIVISION
Publication No. 1597

[1]Prepared for U.S. Department of Energy, Assistant Secretary for Resource Applications, Division of Hydroelectric Resources Development.

[2]Science Applications, Inc., Oak Ridge, TN 37830, prepared under ORNL Subcontract No. 62B-13819C; Letter Release X07.

Date Published: January 1981

NOTICE This document contains information of a preliminary nature. It is subject to revision or correction and therefore does not represent a final report.

OAK RIDGE NATIONAL LABORATORY
Oak Ridge, Tennessee 37830
Operated by
UNION CARBIDE CORPORATION
for the
DEPARTMENT OF ENERGY

OAK RIDGE NATIONAL LABORATORY LIBRARIES

3 4456 0551913 2

ACKNOWLEDGMENTS

The assistance of many individuals (Appendix B of this report) in providing information necessary for the preparation of this document is gratefully acknowledged. We express special thanks to Charles Liston (Michigan State University), James Clugston (U.S. Fish and Wildlife Service), Wesley Ebel (National Marine Fisheries Service), Joseph Johnson (Tennessee Valley Authority), Ed Mains (U.S. Army Corps of Engineers, North Pacific Division), Dilip Mathur (Muddy Run Ecological Laboratory), and Raymond Oligher (U.S. Army Corps of Engineers, Walla Walla District). Appreciation is also extended to Howard Mayo (Allis-Chalmers Corporation) for his review of the document's technical aspects. Charles Coutant, James Loar, and Webster Van Winkle (Oak Ridge National Laboratory) and Ben Rizzo (U.S. Fish and Wildlife Service) provided helpful comments on early drafts of this report.

FOREWORD

This document is based on a subcontract report submitted to Oak Ridge National Laboratory (No. 62B-13819C, letter release X07) by Science Applications, Inc. The study was funded by the U.S. Department of Energy, Assistant Secretary for Resource Applications, Division of Hydroelectric Resources Development. The purpose of this document is to provide summary information for use by potential developers and regulators of small-scale hydroelectric projects (defined as existing dams that can be retrofitted to a total site capacity of $\leq$30 MW), where turbine-related mortality of fish is a potential issue affecting site-specific development. Mitigation techniques for turbine-related mortality are not covered in this report, but they will be the subject of another document scheduled for preparation in 1981.

Oak Ridge National Laboratory is implementing the Environmental Subprogram Plan of the Department of Energy, Division of Hydroelectric Resources Development (Hildebrand and Grimes 1979). This present document is the fourth in a series of analyses of environmental issues related to small-scale hydroelectric development. The previous three reports in this series (Loar et al. 1980, Hildebrand 1980a, and Hildebrand 1980b) address dredging, upstream fish passage, and water level fluctuation, and they are available from the National Technical Information Service, U.S. Department of Commerce, 5285 Port Royal Road, Springfield, Virginia 22161.

Stephen G. Hildebrand
Environmental Sciences Division
Oak Ridge National Laboratory
Oak Ridge, Tennessee 37830

ABSTRACT

Turbak, S. C., D. R. Reichle, and C. R. Shriner. 1980. Analysis of environmental issues related to small-scale hydroelectric development. IV: Fish mortality resulting from turbine passage. ORNL/TM-7521. Oak Ridge National Laboratory, Oak Ridge, Tennessee. 116 pp.

This document presents a state-of-the-art review of literature concerning turbine-related fish mortality. The review discusses conventional and, to a lesser degree, pumped-storage (reversible) hydroelectric facilities. Much of the research on conventional facilities discussed in this report deals with studies performed in the Pacific Northwest and covers both prototype and model studies. Research conducted on Kaplan and Francis turbines during the 1950s and 1960s has been extensively reviewed and is discussed. Very little work on turbine-related fish mortality has been undertaken with newer turbine designs developed for more modern small-scale hydropower facilities; however, one study on a bulb unit (Kaplan runner) has recently been released. In discussing turbine-related fish mortality at pumped-storage facilities, much of the literature relates to the Ludington Pumped Storage Power Plant. As such, it is used as the principal facility in discussing research concerning pumped storage.

TABLE OF CONTENTS

Page

FOREWORD v

ABSTRACT vii

LIST OF TABLES xi

LIST OF FIGURES xii

1. INTRODUCTION 1

2. CONVENTIONAL HYDROELECTRIC TURBINE INSTALLATIONS 3

2.1 Background 3
2.2 Turbine Types and Operation 8
2.3 Methods of Estimating Fish Mortality 17
2.4 Results and Conclusions of Mortality Studies 23
2.5 Analysis of Studies Cited 44

3. PUMPED-STORAGE (REVERSIBLE) HYDROELECTRIC FACILITIES . . . 48

3.1 Background 48
3.2 Methods of Estimating Fish Mortality 51
3.3 Results and Conclusions of Mortality Studies 61
3.4 Analysis of Studies Cited 75

4. SUMMARY AND CONCLUSIONS 79

REFERENCES 83

APPENDIXES 91

A. GLOSSARY 91

B. CONTACTS 95

LIST OF TABLES

Table		Page
1	Life history information on anadromous fish species used in turbine-related mortality investigations	5
2	Summary of prototype investigations of turbine-related fish mortality conducted at hydroelectric installations equipped with Francis runners where experimental modifications in operating conditions were employed	26
3	Summary of prototype investigations of turbine-related fish mortality conducted at hydroelectric installations equipped with Francis runners for different test fish species and size ranges	29
4	Types of injury experienced in turbine-related fish mortality investigations conducted by U.S. Army Corps of Engineers, Walla Walla District	34
5	Summary of prototype investigations of turbine-related fish mortality conducted at hydroelectric installations equipped with Kaplan runners where experimental modifications in operating conditions were employed	36
6	Summary of prototype investigations of turbine-related fish mortality conducted at hydroelectric installations equipped with Kaplan runners for different test fish species and size ranges	38
7	Biomonitoring methods used to assess effects of various pumped-storage projects on fish populations	52
8	Summary of 1974 fish passage experiments at the Ludington pumped-stored facility	64
9	Summary of 1975 fish passage experiments at the Ludington pumped-stored facility	65
10	Summary of board passage experiments at the Ludington pumped-storage facility	68
11	Summary of fish passage experiments at the Ludington Pumped Storage Power Plant conducted in 1978	72
12	Mortality data of Pleasant Ridge pressure experiments	74
13	Results of exposure of striped bass eggs and larvae to pressures less than atmospheric in the laboratory	76

LIST OF FIGURES

Figure		Page
1	Hydroelectric installations in the Pacific Northwest at which prototype studies were conducted	4
2	Illustration of mixed-flow Francis runner and axial-flow Kaplan runner	10
3	Details of typical Francis and Kaplan turbines	11
4	Cross-sectional view of hydroelectric unit (Kaplan turbine) showing headwater and tailwater elevations	14
5	Runner of propeller-type turbine with circular arrows showing potential cavitation areas	16
6	Examples of partial recovery net systems used in turbine-related fish mortality studies	20
7	Illustration of a full recovery net system used in turbine-related fish mortality studies	22
8	Fish survival versus turbine efficiency	40
9	Top view of Kaplan runner showing clear openings between the hub and runner blade, the wicket gates and the blade, and the guide vanes and the wicket gates	42
10	Sampling apparatus for fish mortality studies at the Banks Lake, Washington, pumped-storage site	58
11	Proposed sampling apparatus for fish mortality studies in the (a) tailrace and (b) forebay of the Mt. Elbert Pumped Storage Powerplant	59
12	Schematic of pumping cycle pressure regime expected at the Cornwall pumped-storage facility at full power level	62
13	Schematic of generating cycle pressure regime expected at the Cornwall pumped-storage facility at full power level	63
14	Comparison of damage between pumping and generating phases in the 1974 board passage experiments at the Ludington pumped-storage facility	70

1. INTRODUCTION

The objective of this document is to present a state-of-the-art review of turbine-related mortality of fishes. Although fish mortality in hydraulic turbines is only one of the potential impacts resulting from hydropower development (Hildebrand 1979), it appears to be an important one. The completion of large hydroelectric and storage projects, as well as renewed interest in developing small-scale hydropower projects, will result in more water flowing through turbines. Turbine-related impacts may be particularly severe to juvenile anadromous fishes which, during downstream migration, may encounter a series of hydroelectric installations. The extensive work conducted on the salmonid fishes of the Pacific Northwest provides specific insights into this problem.

This review considers fish mortality resulting from turbines installed in both conventional and nonconventional hydroelectric installations in North America. Conventional facilities include run-of-river and pondage operations, whereas nonconventional plants consist of pumped-storage operations. Although the literature on turbine-related fish mortality has been reviewed (Lucas 1962, Bell et al. 1967, and Montreal Engineering Company, Ltd. 1980), pumped-storage operations were not considered. Information on conventional installations is primarily from studies undertaken in the Columbia River drainage basin by the Fisheries Research Engineering Program, U.S. Army Corps of Engineers, North Pacific Division and, to a lesser extent, from investigations conducted in western and eastern Canada. Mortality data from pumped-storage turbines draw heavily from work done at Ludington, Michigan, the site of the world's largest pumped-storage operation.

The scope of this document may be defined even further. In studies undertaken at the conventional hydroelectric installations, only mortality occurring as a result of fish passage from the turbine intake to the draft tube exit will be reviewed. For nonconventional

hydroelectric facilities, investigations of mortality associated with both the pumping and the generating modes of operation will be discussed. In either type of facility, mortality resulting from mitigative measures, such as the installation of screens or passage facilities at the turbine intake, or from predation in the tailrace area are beyond the scope of this report, but they are important considerations in the overall evaluation of turbine-related fish mortality.

A glossary of technical terms used frequently in this document is provided in Appendix A. Appendix B presents a list of contacts identified with expertise in turbine-related mortality of fish.

2. CONVENTIONAL HYDROELECTRIC TURBINE INSTALLATIONS

Most studies on fish mortality resulting from turbine passage are associated with conventional hydroelectric plants. Both model and prototype investigations are reported in the literature. Model studies refer to those conducted in a hydraulic laboratory on scale models of turbines in use at different locations. Prototype studies are actual field investigations undertaken at a specific unit or units within a powerhouse. The latter type of study has been performed primarily at installations in the Pacific Northwest; locations of these plants are shown in Figure. 1.

2.1 Background

Water resources development in the Pacific Northwest has been and will probably continue to be profoundly influenced by commercial and sport fishing of anadromous species. The effect of hydraulic structures on migratory fish has been the subject of extensive study by the U.S. Army Corps of Engineers, the National Marine Fisheries Service, and the fishery agencies in the states of Oregon and Washington and the province of British Columbia. Investigations of turbine-related mortality were conducted primarily in the 1950s and 1960s. More current research efforts have concentrated on (1) nitrogen gas supersaturation problems, (2) development and refinement of fish passage facilities at dams, and (3) transportation systems for downstream migrants.

In studies conducted on the effects of turbines, juvenile stages of salmonid fishes were usually used as test organisms because these vulnerable organisms encounter dams in their downstream migration to the ocean. Table 1 lists life history information for the five species of Pacific salmon, the steelhead trout, and the Atlantic

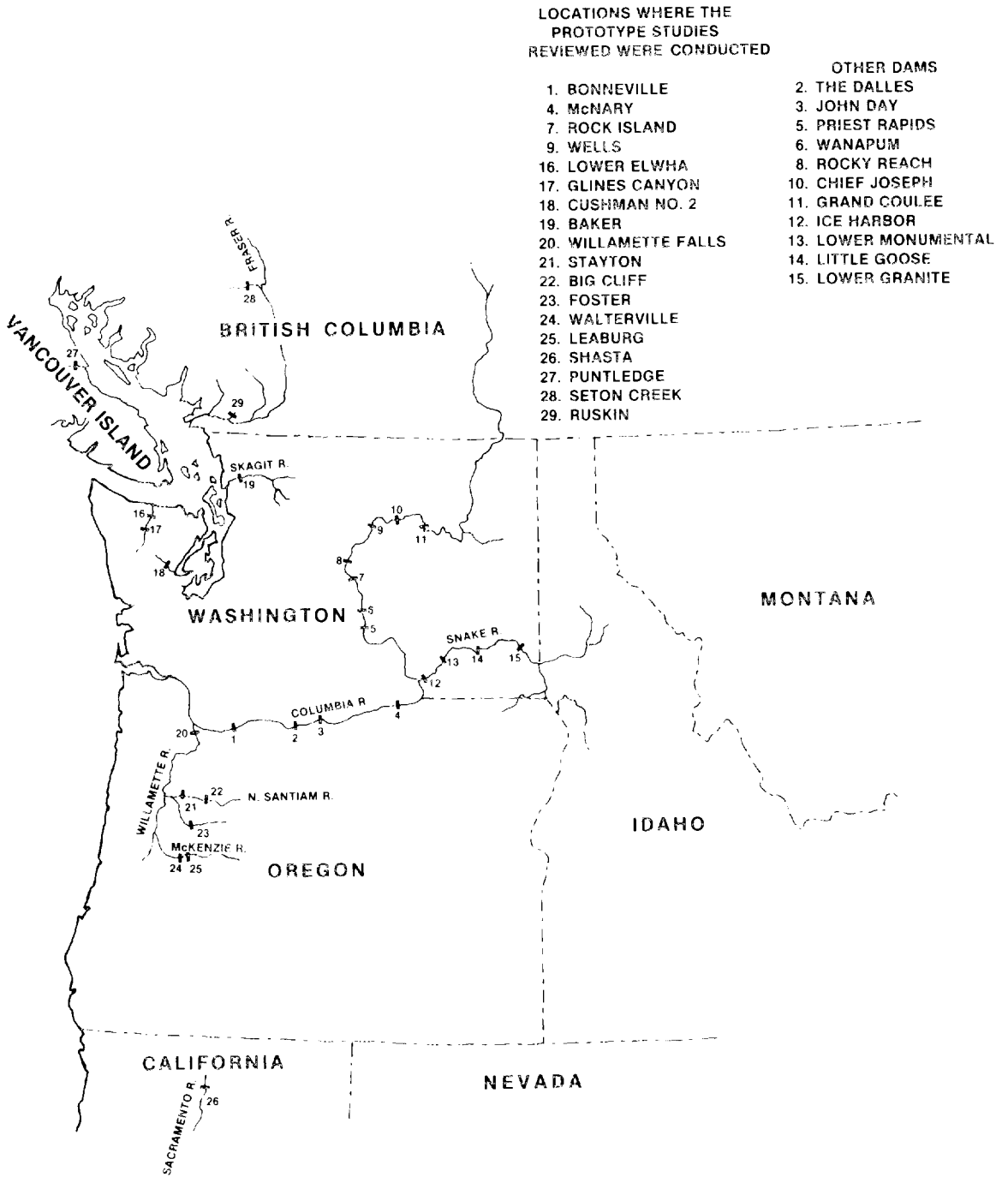

Figure 1. Hydroelectric installations in the Pacific Northwest at which prototype studies were conducted. Source: Redrawn from U.S. Army Corps of Engineers, Map of Water and Land Resources for Columbia-North Pacific Region, August 1979.

Table 1. Life history information on anadromous fish species used in turbine-related mortality investigations[a]

Common name	Scientific name	Months/seasons in which the following activities occur				Downstream migrants	
		Spawning	Egg incubation	Rearing	Downstream migration	Composition	Size
Chinook salmon Fall	Oncorhynchus tshawytscha	Sept. to Jan.	Sept. to March	March to following April (up to 1 year)	April to June	Fry start emerging in March. Fry run peaks in April, but considerable numbers migrate in May, lesser numbers in June. May rear to smolt and migrate the following year.	Length of all chinook fingerlings: 51-57 mm
Spring		Late July to late Sept.	Sept. to March	March to following April (1 year or longer)	Spring and summer of following year		Length of spring chinook yearlings: 76-127 mm
Summer		Sept. to mid-Nov.	Nov. to March	March to following March (1 year or longer)	March to June of following year		
Coho salmon	Oncorhynchus kisutch	Sept. to March	Sept. to April	April to following spring (1 year or longer)	March to July of following year	May migrate to sea as fry, but most spend a year in freshwater and migrate as smolts. Main downstream movement occurs in May for both smolts and fry, but fry may be moved downstream throughout the summer.	Length of yearling smolts: 89-114 mm
Pink salmon	Oncorhynchus gorbuscha	Late Aug. to late Sept.	Late Aug. to mid-Oct.	Jan. to May	Dec. to May	Migrate immediately after emergence. Peak of run occurs in April.	Length of migrating fry: 25-38 mm
Chum salmon	Oncorhynchus keta	Mid-Sept. to early Jan.	Mid-Sept. to early March	Dec. to May	Dec. to May	Emergence and migration similar to pink salmon, except peak migration of fry is in May.	Length of migrating fry: 38-51 mm
Sockeye salmon	Oncorhynchus nerka	Aug. to Nov.	Temp.-dependent, 80-140 days, fry emerge April to May	1-3 years	April to June	Do not migrate until at least yearling smolts	Length of second-year smolts: 89-127 mm
Steelhead trout Summer, group A	Salmo gairdnerii gairdnerii	Feb. to March	Feb. to April	1-2 years	March to June	Do not migrate until at least yearling smolts	Length of third-year smolts: 125-203 mm
Summer, group B		April to May	April to May	1-2 years	March to June		
Winter		Feb. to May	Feb. to July	1-3 years (avg. 2 years)	March to June		

Table 1 (continued)

Common name	Scientific name	Months/seasons in which the following activities occur				Downstream migrants	
		Spawning	Egg incubation	Rearing	Downstream migration	Composition	Size
Steelhead trout (continued)							
Spring		Late Dec. to March	Late Dec. to May	1-2 years	Spring and summer of following year		
Atlantic salmon	*Salmo salar*	Late summer to early fall	Fall to spring	1-2 years	Spring to summer	Migrate as smolts	Smolts are generally: 127-152 mm long

[a]Information on Pacific salmon and steelhead compiled from Department of Fisheries, Canada (1958) and Bell (1973); that on Atlantic salmon from Montreal Engineering Company, Inc. (1980).

salmon. The latter anadromous species, Atlantic salmon, is important in the eastern United States and Canada. Downstream migration is initiated as a response to changing environmental conditions such as increase in stream flow and rising water temperature (Bell 1973). Seaward migration generally begins during the spring months, and, for some species, is closely associated with the time of peak river discharge.

The methods, results, and conclusions of both model and prototype studies are reviewed in Section 2.4. Key papers, such as those of the U.S. Army Corps of Engineers, Walla Walla (Washington) District, are emphasized. In the compendium on fish passage through turbines, Bell et al. (1967) indicated that experiments conducted with Francis and Kaplan runners should be analyzed separately. This document follows that suggestion, presenting the results and conclusions of studies done with the different runners in separate sections. In so doing, however, the work is not necessarily reviewed in a chronological sequence. Because the experimental design of key investigations often depended on the results of preceding experiments, a historical overview is given in the next two paragraphs.

Prototype studies were initiated at the Columbia River's Bonneville Dam in 1939 shortly after its construction (Holmes 1952, cited in Davidson 1965). Although Rock Island was the first power dam to be built on the mainstem Columbia, its limited powerhouse and upstream location (river-kilometer 726) were not considered sufficiently hazardous to require study (Davidson 1965). Bonneville, however, located only 226 km from the river's mouth, posed a serious problem to anadromous fish passage. After the experiments undertaken at Bonneville, other prototype studies were conducted in (1) Washington (Hamilton and Andrew 1954a, Schoeneman and Junge 1954), (2) Oregon (Schoeneman et al. 1961, Oregon State Game Commission undated a and b, 1960, and 1961), (3) British Columbia (Hamilton and Andrew 1954b, cited in Lucas 1962; Department of Fisheries, Canada 1958; Andrew and Geen 1958), and (4) the Maritime Provinces (MacEachern 1959, 1960; Smith 1960, 1961; Semple 1979).

In 1959, the U.S. Army Corps of Engineers, Walla Walla District, began a series of experiments that spanned the following 10 years. They were designed to determine not only the extent of fish mortality from turbine passage, but also the causes of mortality and possible modifications in turbine design and operating conditions that would reduce mortality. The first group of experiments was conducted with both Francis and Kaplan models (Cramer 1960). The next experiments sought to relate turbine design considerations to fish mortality at the high-head Cushman No. 2 Hydroelectric Plant equipped with Francis prototypes (Cramer and Oligher 1960). These were followed by additional model studies of Francis runners (Cramer and Oligher 1961a), the results of which were field tested in further work done at Cushman No. 2 (Cramer and Oligher 1961b) and with the Francis prototypes at the high-head Shasta Hydroelectric Plant (U.S. Army Corps of Engineers, Walla Walla District 1963). The following studies were also prototype ones, but were conducted on the low-head Kaplan runner at Big Cliff Dam (Oligher and Donaldson 1966; U.S. Army Corps of Engineers, Walla Walla District 1979). The final experiments were done on the Kaplan prototype at the low-head Foster Dam, which, on the basis of previous experiments, was designed for maximum fish survival during turbine passage (Bell 1979).

Very little work on fish mortality in turbines has been conducted since 1969.

2.2 Turbine Types and Operation

An understanding of turbine function is essential for an analysis of fish passage through turbines; therefore, turbine types and operation are briefly discussed. Hydraulic turbines are classified as (1) impulse turbines or (2) reaction turbines. The terms reaction and impulse have hydraulic significance in differentiating between the actions of the water and the two turbine types and have become firmly

established through general usage. The two groups of turbines, differ in the type(s) of energy that they are capable of converting into mechanical energy and, subsequently, into electrical energy. The impulse turbine transforms the kinetic energy of a high-velocity jet discharging at atmospheric pressure on relatively small buckets positioned on the circumference of a wheel (Cramer and Oligher 1964). In reaction turbines, the entire flow through the system from headwater to tailwater occurs in a closed conduit system and is not open to the air at any point (Davis 1952). As water approaches the runner, it has both pressure energy (because of its depth below the headwater surface) and kinetic energy (because of its velocity) (Kuiper 1965). Fish mortality investigations have been conducted almost exclusively with reaction-type turbines.

Reaction turbines can be subdivided into Francis and propeller types. Francis turbines are most commonly used under hydraulic heads ranging from 30 to 300 m. The number of blades in a Francis runner varies from 14 for lower heads to 20 for higher heads (Cramer and Oligher 1964). Propeller-type turbines are generally installed at lower head plants (<30 m) and usually have three to eight blades. The clear opening between blades is greater than that of Francis runners.

The Francis turbine is a mixed-flow system in which water enters the outer periphery of the runner and flows toward the shaft at right angles to it, changing direction within the runner to a direction parallel to the shaft (Figure 2). A similar flow pattern is also common upstream of those propeller-type turbines that have conventional distributor assemblies and that operate at medium heads. In most of the propeller runners recently installed at low-head facilities, however, water moves through the turbine parallel to the axis of the runner (axial-flow) (Figure 2). The Kaplan turbine, which is a special modification of the axial-flow, propeller-type turbine, has adjustable blades that are coordinated with wicket gate positions for obtaining higher efficiencies throughout the operating head and output (Mayo 1979). The basic features of a reaction turbine unit, illustrated in Figure 3, consist of the runner or wheel, spiral case,

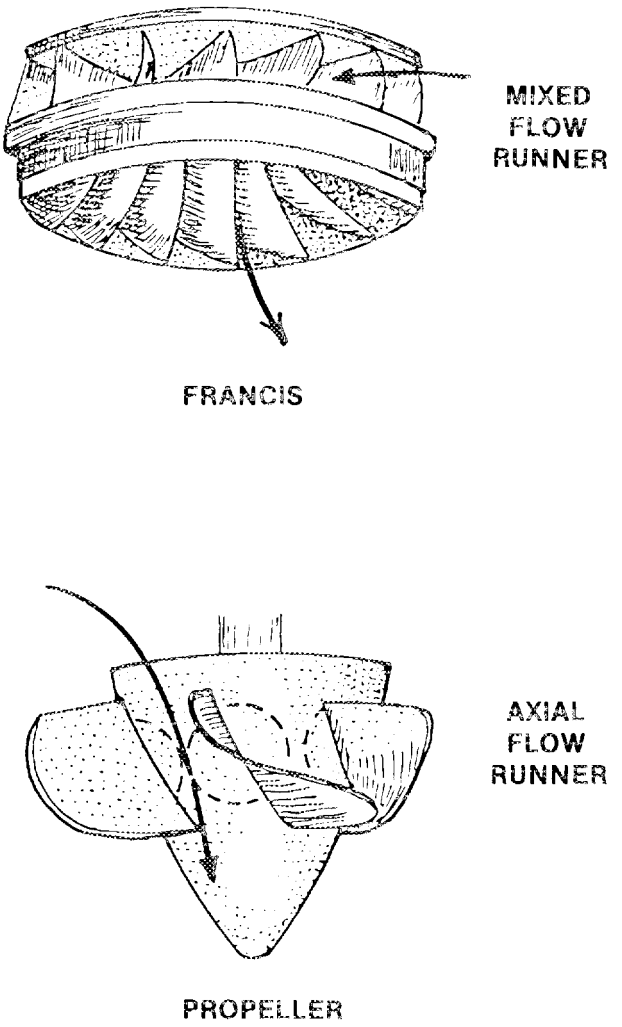

Figure 2. Illustration of mixed-flow Francis runner and axial-flow propeller runner.
Source: Montreal Engineering Company, Inc. 1980.

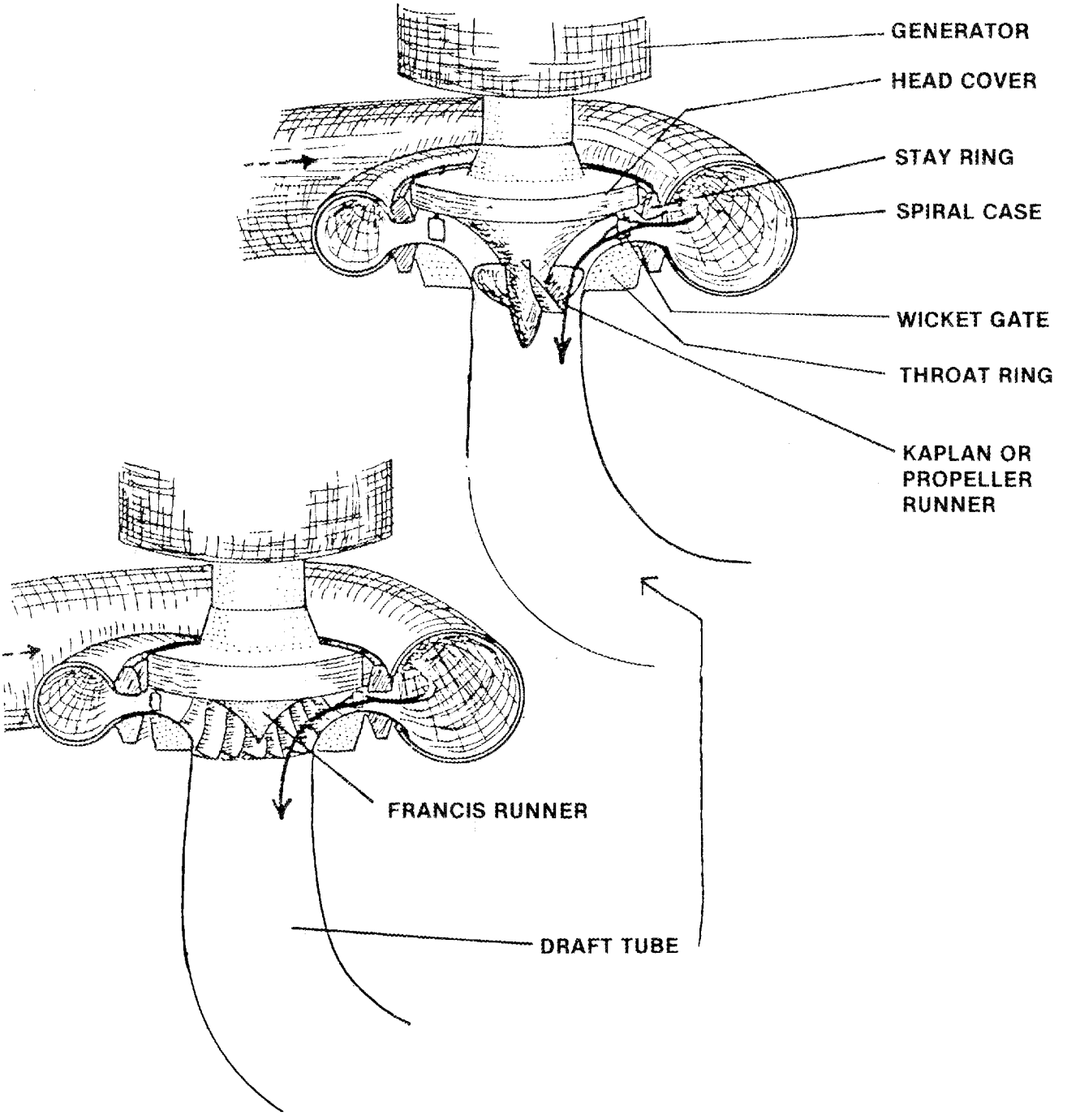

Figure 3. Details of typical Francis and Kaplan turbines. Source: Montreal Engineering Company, Inc. 1980.

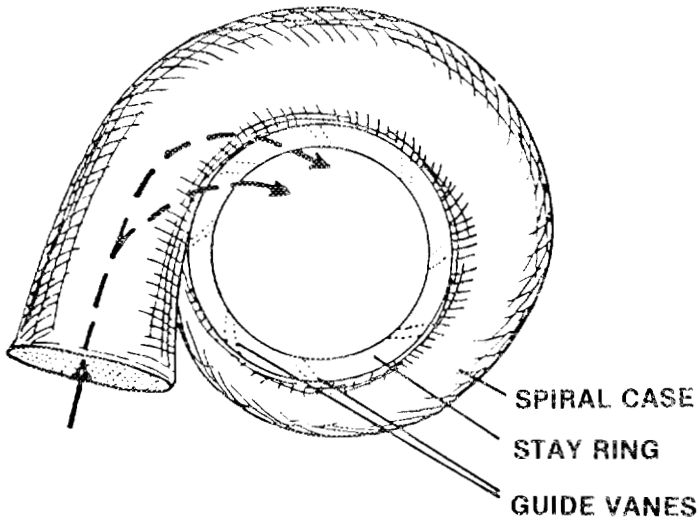

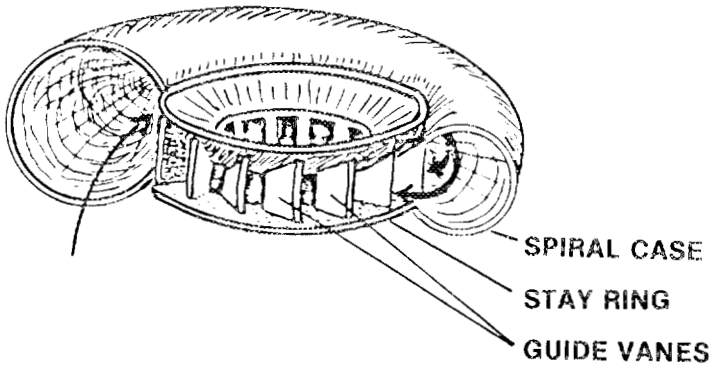

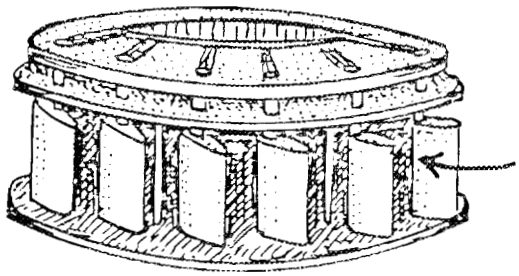

WICKET GATE

Figure 3 (continued)

stay ring with fixed guide vanes, adjustable wicket gates, and draft tube.

The reaction turbines or models of such turbines that serve as test systems for fish mortality investigations have been predominantly older designs. More recently developed turbine-generator combinations, which are particularly suitable for small-scale operations, have been reviewed by Mayo (1979). Among the designs described are the bulb generator and the TUBE* turbine units, both of which are equipped with propeller-type runners and horizontal shafts. The unique feature of the bulb unit is that the generator is encased in a steel bulb, which is located in the water passages usually upstream from the runner. The TUBE turbine has stationary wicket gates or guide vanes, a tubular shaft, a runner with adjustable blades, and a generator completely removed from the water passageways.

In the more traditional Francis and Kaplan designs, water enters the unit's intake and flows into the spiral (or semi-spiral) case (Figure 4). In these passages, water velocity is relatively low, and pressure is strongly positive. Velocity, accelerating through the guide vanes and wicket gates, reaches a maximum when flowing through the runner and decelerates after passage through the runner. Some of the remaining pressure head also decreases as the water moves through the runner. The velocity head is converted to pressure in the draft tube. The tailwater submergence elevation influences the degree to which positive pressures may be restored in the draft tube. The turbine setting is the elevation of the runner's centerline with respect to the tailwater elevation. When the setting corresponds to a negative vertical distance (runner centerline below the tailwater elevation), draft tube pressure will be positive. If the turbine setting is above the tailwater submergence elevation and operating conditions are suboptimal, negative pressures may result in cavitation.

---

*TUBE turbine is Allis-Chalmers trademark.

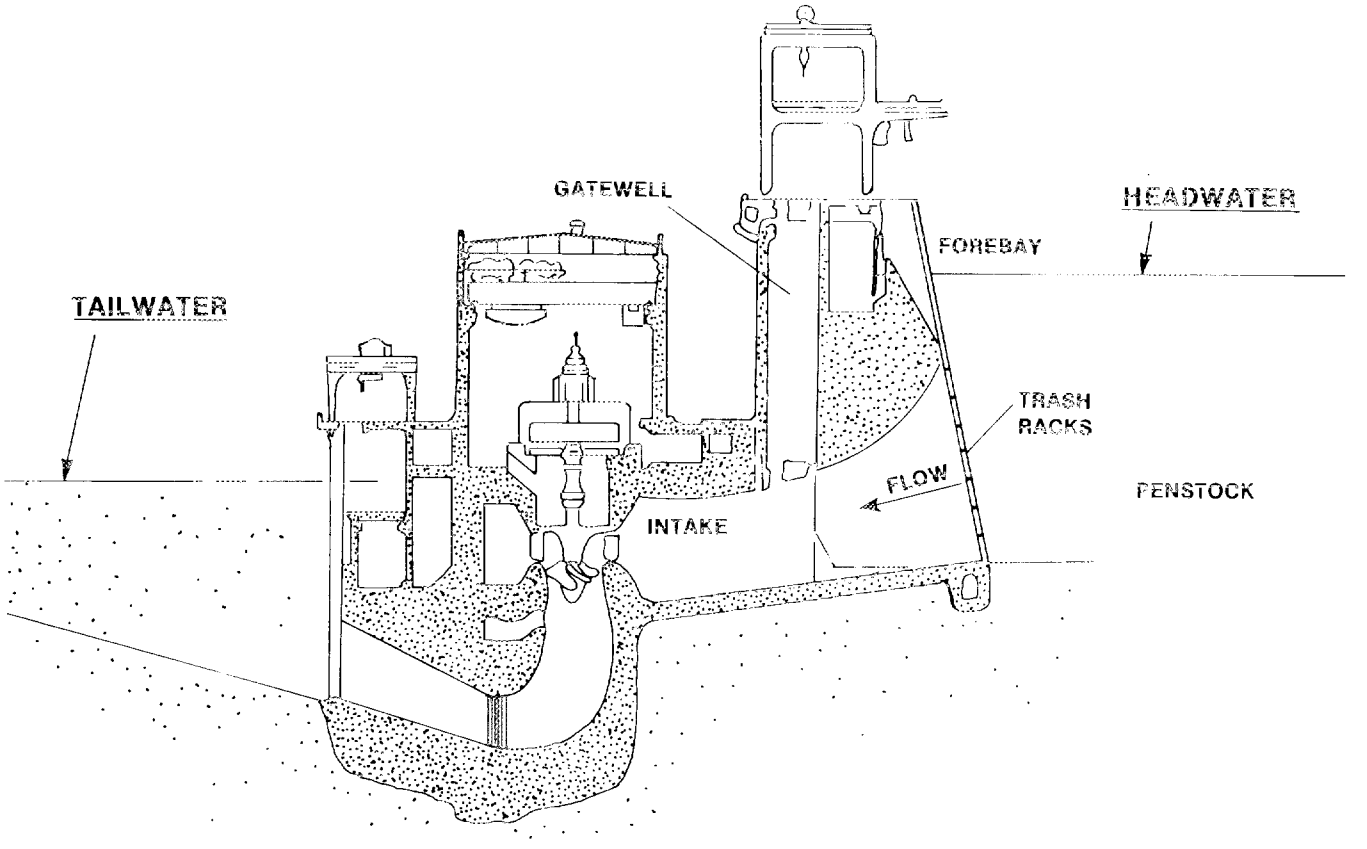

Figure 4. Cross-sectional view of hydroelectric unit (Kaplan turbine) showing headwater and tailwater elevations. Source: Redrawn from Long and Marquette 1967.

Cavitation may be explained as follows. At locations under the wicket gates, on the throat ring, or on the runner blades experiencing sudden changes in the relative velocity of water, the flow pattern may be sufficiently disturbed to produce highly localized shearing forces in the water. In these regions, the water's viscosity, or the resistance to shearing stresses, produces vortices that have areas of low pressure in their centers. If the flow conditions are particularly turbulent, the strength of these vortices will increase to a point where the pressure inside them decreases to the vapor pressure of water. Vapor-filled cavities form; when these cavities enter a zone of higher pressure, they violently collapse or implode, producing an intense pressure wave. Cavitation produces vibration in the turbine unit and causes pitting in the metal surfaces of the unit. Areas of the runner subject to cavitation are shown in Figure 5.

The tendency toward cavitation is described by the Thoma criterion or the cavitation number, σ. Sigma is a positive, dimensionless number that is used to define the required depth of the turbine setting in relation to the plant's net head. This parameter for a particular hydroelectric installation ("plant" sigma, σ_p) may be calculated by

$$\sigma_p = \frac{H_A - H_T}{H_p} ,$$

where

H_A = barometric pressure minus the vapor pressure of water in the turbine,
H_T = turbine setting,
H_p = net head at the hydroelectric installation.

If the turbine setting is deep, then sigma is higher, and a lower potential for cavitation exists for a given runner design (Montreal Engineering Company, Ltd. 1980). Critical sigma is the value of sigma at which cavitation affects turbine performance.

When a turbine is running at maximum efficiency, the guide vanes and wicket gates are closely aligned, and the flow through the runner

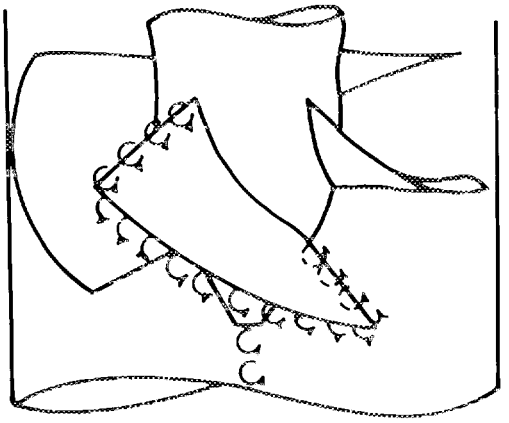

Figure 5. Runner of propeller-type turbine with circular arrows showing potential cavitation areas.

is relatively smooth. The water leaving the turbine runner flows into the draft tube in a direction nearly parallel to the shaft. At power loadings greater or less than those existing at maximum turbine efficiency, guide vanes and wicket gates do not form a continuum, and the resulting angularity increases turbulence. During turbine part-load, water entering the draft tube tends to flow in the same direction as that of the rotating runner, whereas during full-load, the water forms a whirl in the opposite direction (Muir 1959). During these suboptimal operating conditions, a vortex may form below the runner cone in some cases (Figure 5), and undesirable cavitation tendencies may be increased.

There are many factors in an operating turbine that can injure or kill fish passing through the unit. Of these factors, cavitation is believed to be the most serious (Bell et al. 1967, Lucas 1962, Muir 1959). Forces strong enough to damage metal can certainly be lethal to fish. Decapitation and the production of "pulpy" tissues and internal hemorrhages are examples of the types of severe injuries attributable to cavitation. Pressure changes of a magnitude less than those producing cavitation can also be harmful to fish. In addition, shear forces produced by rapid changes in the direction of water flowing through the unit and contact between fish and the turbine's mechanical features (runner hub, runner blades, wicket gates, etc.) may also cause mortality.

2.3 Methods of Estimating Fish Mortality

2.3.1 Model

During 1959 and 1960, model studies were conducted by the U.S. Army Corps of Engineers, Walla Walla District, at the Allis-Chalmers Hydraulic Laboratory in York, Pennsylvania (Cramer 1960, Cramer and Oligher 1961a). Model turbines were designed to be scale versions of

prototype units installed in various parts of the United States. Nonsalmonid fingerlings were introduced into the model penstock via a fish lock and were recovered in a net attached to the draft tube outlet. Control fish were subjected to the same handling conditions, but were not placed in the model turbines. Both test and control fish were observed for 5 d after the tests to assess delayed mortality. Survival was calculated by the ratio of the fraction of live fish in the test group to the fraction of live fish in the control group. Mortality was calculated by subtracting the fraction of test fish survival (corrected for control fish survival as described above) from 1.00. In these experiments, different operating conditions (variations in hydraulic head, runner speed, and tailwater elevation, or modification of the runners) were tested to elucidate their effect on the mortality of different species of fish in varying size classes. Fish killed in the experiments were examined by pathologists to determine the probable cause of mortality.

2.3.2 Prototype

Because of the number of prototype investigations undertaken and the evolution of methods effective for conducting these complex field operations, only a general description of the methods will be presented. Mark, release, and recapture methods were used in which marked test fish were usually introduced into the turbine intake and recovered at some point after passage through the turbine. Control fish were released at the draft tube exit into the tailrace and recovered by similar means. Recapture times may range from immediate (downstream from dams with nets) to long term (returning adults) (Olson and Kaczynski 1980).

In the early studies done at Bonneville Dam (Holmes 1952, cited in Davidson 1965), mortality was estimated by comparing the ratio of returning adult test and control fish. With this procedure, the sample size of returning adults is often too small to yield meaningful

results, and studies must be conducted for several years to accumulate sufficient data for estimating mortalities (Schoeneman et al. 1961). Hamilton and Andrew (1954a) and Schoeneman and Junge (1954) developed partial recovery methods in which marked test and control fish were caught in the tailrace or areas of the river downstream from the powerhouse. Fyke nets equipped with live boxes were generally used for these purposes (Figure 6). The turbine intake gatewells or turbine bypass structures of downstream dams have also been used to recover test and control fish (Olson and Kaczynski 1980). Partial recovery techniques permitted an almost immediate assessment of results so that experimental procedures could be readily duplicated or modified. Also, a much larger sample was available for statistical analysis so that narrower confidence intervals for fish mortality could be calculated. Survival estimates were then based on the ratio of the fraction of live test fish (immediate and delayed) in the total number of test fish recovered to the fraction of live control fish (immediate and delayed) in the total number of control fish recovered. Mortality was calculated by subtracting the fraction of corrected test fish survival from 1.00. Hamilton and Andrew (1954a) compared mortality calculated from partial recovery methods with those based on adult returns and found close agreement. These researchers further refined mortality estimates from partial recovery methods by pointing out the falseness of the assumption that the recovery rates for dead and live fish were the same. Because live fish would enter the nets more readily than dead ones, the authors suggested that marked dead fish be released with the live ones in the penstock so that a true recovery rate of dead fish could be determined. This procedure permitted derivation of a factor for correcting the disproportionate availability of live and dead fish in the catch.

Another method that was used for partially recovering fish passed through the turbine was the gossamer bag and balloon technique (U.S. Army Corps of Engineers, Portland District 1960). Fingerlings were placed inside gossamer bags, which were attached to balloons. After passage through the turbine blades, the balloon inflated automatically

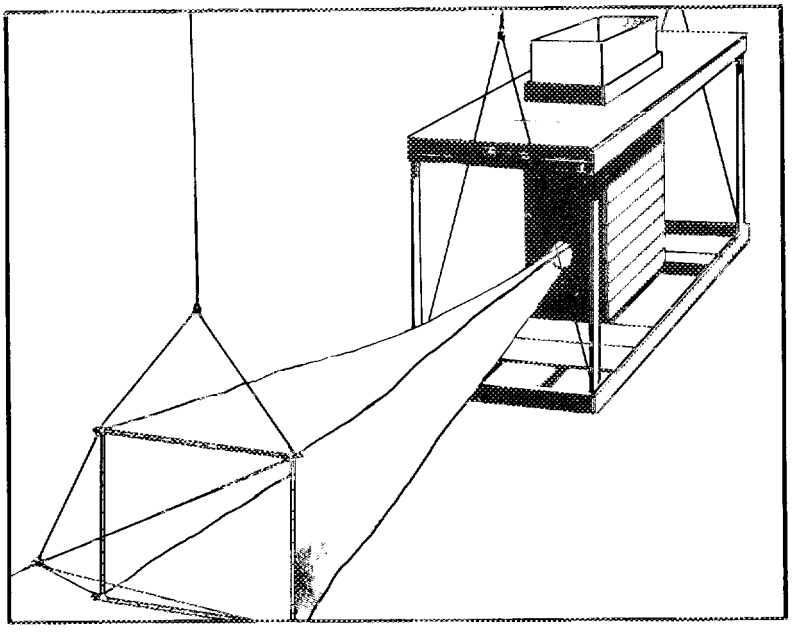

TAILRACE SURVIVAL GEAR

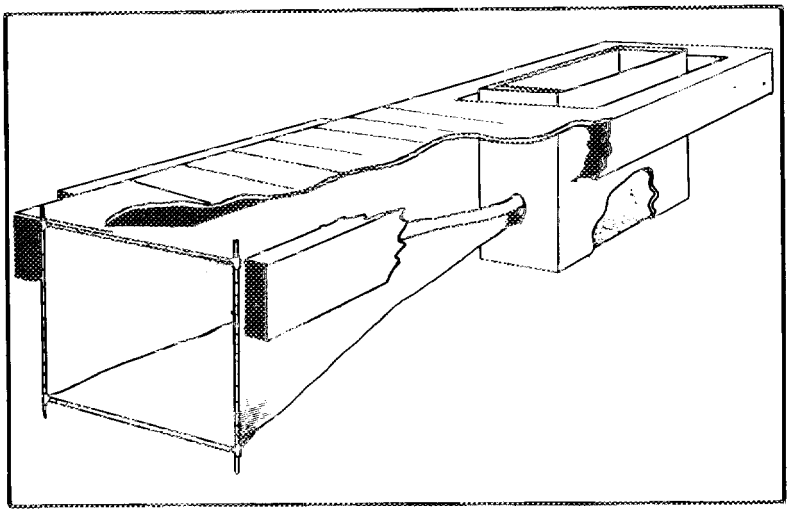

PONTOON-MOUNTED FYKE NET AND SURVIVAL BOX USED IN THE RIVER.

Figure 6. Examples of partial recovery net systems used in turbine-related mortality studies. Source: Hamilton and Andrew 1954a.

by means of gelatin capsules of calcium hydride timers. Fish were then recovered in the tailrace or at points further downstream. This technique was discontinued because it was uncertain how the gossamer bags may have helped or hindered survival in the turbine. A somewhat similar method described by Johnson (1970) involved attaching a float-tag assembly to the fish. This technique, however, was reported after most of the turbine passage experiments had been completed.

The use of full recovery nets or nets designed to strain the water flowing through a turbine unit (Figure 7) was widely endorsed by the U.S. Army Corps of Engineers. Use of these nets improved the recovery of test and control fish over partial recovery methods (Cramer and Donaldson 1964). These nets were fastened to a rigid steel frame placed flush against the draft tube opening (Figure 7).

After development of efficient and reliable recovery methods, differences in mortality with varied operating conditions could be assessed. As in the model studies (Sect. 2.3.1), fish killed in the experiments were examined by pathologists.

2.3.3 Assessment of Study Type

The model and prototype experiments are both important in elucidating the extent and cause of turbine mortality. Initial findings in the model experiments could suggest operating conditions or runner modifications that should be investigated further in field studies. Recovery of turbine-passed fish and complete control of experimental conditions were possible in the model turbine units, making conclusions more definitive and the statistical basis of comparing test situations stronger. However, in the model experiments, it was impossible to scale down the sizes of test fish so that the ratio of fish length to turbine dimensions was the same as that in prototype turbine studies. The fish passing through the McNary prototype would have had to be 1.2 m in length to compare experimental conditions with those in the McNary model (Cramer 1960).

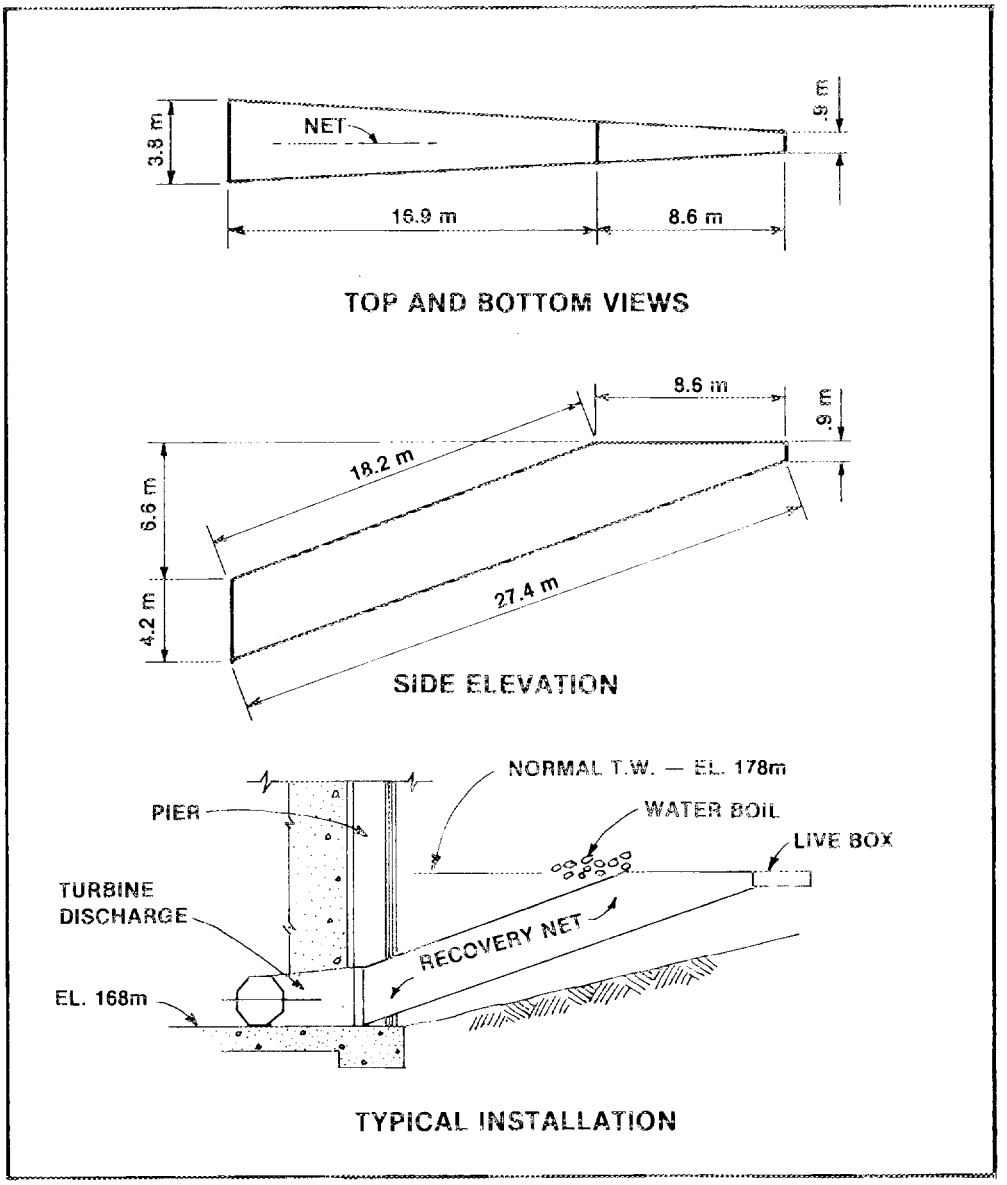

Figure 7. Illustration of a full recovery net system used in turbine-related mortality studies. Source: Cramer and Donaldson 1964.

This turbine size factor may have strongly influenced the magnitude of mechanical-type injuries observed in the different studies. Although similarities were noted in the results of model and prototype investigations initially conducted by the U.S. Army Corps of Engineers, Walla Walla District (Cramer and Oligher 1960), Bell et al. (1967) contended that predicting prototype performance from the model studies was probably not feasible.

2.4 Results and Conclusions of Mortality Studies

2.4.1 Model Studies with Francis Runners

Head, speed, and turbine setting were varied in the first set of experiments conducted with the model Francis runners (Cramer 1960, Von Gunten 1961). Results indicated that

1. Mortality increased with higher head and higher speed. Mechanical-type injuries (abrasion, contusion, laceration) increased with runner speed so that, at relatively high speeds, correlation of pressure injury to turbine operating conditions was impossible.

2. Mortality increased as draft tube pressures decreased from higher turbine settings. The injuries incurred by fish tested under these conditions consisted of internal hemorrhages, deflated air bladders, protruding eyeballs, and hemorrhages visible in the pectoral girdle area.

3. Mortality estimates as high as 100% could be produced by combining high runner speeds with low tailwater.

Results of the second set of experiments (Cramer and Oligher 1961a), in which substantial modifications were made in the Francis runner, demonstrated that

1. Small changes increasing the clear opening between the edge of runner blades and the wicket gates could decrease mortality.

2. Total mortality increased as the tailwater level was dropped in successive stages from above to below the runner centerline, even though the point of general cavitation was not reached.

3. Many of the internal hemorrhages may be caused by external mechanical pressures or bruises because injuries characteristic of pressure changes occurred only when the turbine setting was relatively high.

4. In computer analysis of the experimental results, runner speed appeared to be the single most influential variable affecting mortality.

On the basis of these two sets of experiments, the researchers concluded that the operating conditions that provide for maximum survival of fish passing through Francis turbines were relatively low runner speed, high turbine efficiency (the absence of part-load or full-load conditions), relatively deep turbine setting, maximum clearances between wicket gates and the intake edges of runner blades, maximum clearances between blades, and turbine operation at relatively high sigma values (Cramer and Oligher 1961a).

Although different species of fingerlings (fathead minnow, largemouth bass, and banded killifish), ranging in size from 38 to 61 mm, were tested in the first set of experiments, no conclusions were drawn on their differential susceptibility to injury. In the second set of experiments, the relationship between size and mortality remained inconclusive, primarily because of handling losses in the small- and medium-size groups.

2.4.2 Model Studies with Kaplan Runners

Model experiments with Kaplan runners were not nearly as extensive as those with Francis runners. However, it was still possible to relate increased mortality to certain operating conditions, such as high runner speed and high turbine setting (Cramer 1960, Von Gunten 1961).

2.4.3 Prototype Studies with Francis Runners

Many prototype studies have been performed with Francis runners, each study having its own unique set of experimental conditions. Data generated from these studies are briefly presented. Table 2 describes the operating conditions, or modifications of those conditions, that existed during the experiments. Table 3 presents data on the test species and their respective sizes. The fish mortality estimates are extremely variable, ranging from 0% mortality calculated for investigations at the Lower Elwha Dam (Schoeneman and Junge 1954) to nearly 100% mortality in the studies done at Crown Zellerbach (Oregon State Game Commission 1961). Clearly, the results largely depend on testing conditions. Because the relationship between structural or operational aspects of turbine function and the resultant fish mortality were more clearly delineated in work done by the U.S. Army Corps of Engineers, Walla Walla District, these studies are emphasized.

The first Francis prototype studies undertaken by the Walla Walla District Corps were conducted at Cushman No. 2 Hydroelectric Plant on the North Fork of the Skokomish River in Washington. The experimental design consisted of testing a series of high, medium, and low tailwater elevations at four specific gate openings (power loadings) (Cramer and Oligher 1960, Von Gunten 1961). Results of these tests indicated that for power heads up to 143 m:

Table 2. Summary of prototype investigations of turbine-related fish mortality conducted at hydroelectric installations equipped with Francis runners where experimental modifications in operating conditions were employed

Hydroelectric installation	Rated normal head (m)	Runner speed (rpm)	Plant sigma		Number of Runner blades	Clear opening between runner blades (cm)	Position of runner in relation to tail-water elevation (m)	Wicket gate opening	Mortality	
			Actual	Min. recom'd.					%	Comments
Baker Dam, all units Baker River Washington 1950-1952 (Hamilton and Andrew 1954a)	76	300	0.113	0.08	19	25 intake 5 discharge	+1.5		28-34 37	Immediate recovery based on adult return
Lower Elwha Dam, units nos. 3 and 4 Elwha River Washington 1953 (Schoeneman and Junge 1954)	32	300	0.185	0.185	15	8			0	Confidence interval of -7 to +5%
Glines Canyon Dam Elwha River Washington 1953 (Schoeneman and Junge 1954)	59	225	0.135	0.125	17	8			30-33	Range indicates that all fish results were combined
Ruskin Dam, unit no. 3 Stave River British Columbia, Canada 1953 (Hamilton and Andrew 1954b, cited in Lucas 1962)	38	120	0.22	0.24	17		+3.0	full load	10.5	
Puntledge Development, one unit Puntledge River British Columbia 1955 (Department of Fisheries, Canada 1958)	104	277	0.092	0.083					28-42	Included 48-h delayed mortalities
Seton Creek Station, one unit Seton Creek British Columbia, Canada 1957 (Andrew and Geen 1958)	45	120	0.296	0.185	17	15	-4.9	full load	9.2	
Leaburg Plant, unit no. 2 McKenzie River Oregon 1958 (Oregon State Game Commission, undated a)	27 (experimental)							0.70	4.8	Confidence interval of 3.6 to 6.0%

Table 2 (continued)

Hydroelectric installation	Rated normal head (m)	Runner speed (rpm)	Plant sigma		Number of Runner blades	Clear opening between runner blades (cm)	Position of runner in relation to tail-water elevation (m)	Wicket gate opening	Mortality	
			Actual	Min. recom'd.					%	Comments
Stayton Plant, unspecified unit Oregon 1959 (Oregon State Game Commission, undated b)	4.5	175					+2.0		2.1-9.1	Range indicates that all fish results were combined
Crown Zellerbach, unit nos. 20 and 21 Willamette Falls Oregon 1960 and 1961 (Oregon State Game Commission 1960 and 1961)	12-13 (experimental)	255-300					+6.4 to +8.2	0.90	18.8 - 100.0	Range indicates that all test fish results are combined
								1.0	28.4 - 99.8	
Publishers' Paper Company, unit no. 2 Willamette Falls Oregon 1960 and 1961 (Oregon State Game Commission 1960 and 1961)	13 (experimental)	300					+6.7 to 7.4	1.0	12.1 - 15.5	Range indicates that all test fish results are combined
Portland General Electric, unit no. 9 Willamette Falls Oregon 1960 (Oregon State Game Commission 1960)	13 (experimental)	240						0.8	14.3 - 25.9	Range indicates that all test fish results are combined
Cushman No. 2, unit no. 33 North Fork of Skokomish River Washington 1960 (Cramer and Oligher 1960)	137	300	0.046 0.073	0.055	15	8-9	+1.2 +2.5 +3.4	0.40	41.0 55.4 47.8	
							+1.5 +2.7 +3.3	0.65	22.7 29.1 34.5	
							+1.2 +2.8 +3.3	0.80	25.0 26.3 44.9	
							+1.2 +2.8 +3.3	1.0	26.5 30.9 36.2	

Table 2 (continued)

Hydroelectric installation	Rated normal head (m)	Runner speed (rpm)	Plant sigma		Number of Runner blades	Clear opening between runner blades (cm)	Position of runner in relation to tail-water elevation (m)	Wicket gate opening	Mortality	
			Actual	Min. recom'd.					%	Comments
Cushman No. 2, unit no. 33 1961 (Cramer and Oligher 1961b)	137	300	0.046 0.073	0.055	15	8-9	+1.5 to +2.1	0.40	63.9	
								0.50	38.0-43.2	Range indicates that coho and steelhead results are combined
								0.60	41.6-53.0	
								0.68	34.7 44.9	
								0.76	26.2-38.0	
								0.84	30.5-46.3	
								0.90	28.7	
								1.0	36.2	
Shasta Dam, U-1 Sacramento River California 1962 (U.S Army Corps of Engineers, Walla Walla District 1963)	101	138.5	0.078 at net head of 119 m	0.067	15	14	+0.4 to +1.0	0.41	21.0-42.4	Range indicates that all test fish results are combined
								0.50	24.6-46.9	
								0.55	18.4-41.2	
								0.60	21.3-33.8	
								0.65	10.7-45.2	
Malay Falls Dam, unspecified units East River Nova Scotia 1975 (Semple 1979)	12	225							10.5	Confidence interval of 8.2 to 12.8%

Source: Adapted from Lucas (1962).

Table 3. Summary of prototype investigations of turbine-related fish mortality conducted at hydroelectric installations equipped with Francis runners for different test fish species and size ranges.

Hydroelectric installation	Fish species tested	Age and size: Age Class of fish	Age and size: Average length of fish (mm)	Age and size: Range in length (mm)	Mortality: %	Mortality: Comments
Baker Dam, all units Baker River Washington 1950-1952 (Hamilton and Andrew 1954a)	Native sockeye	Yearlings	97	78-133	34 37	Immediate recovery based on adult return
	Native coho	Yearlings	98	75-130	28.	Immediate recovery
Lower Elwha Dam, units no. 3 and 4 Elwha River Washington 1953 (Schoeneman and Junge 1954)	Hatchery chinook	Fingerlings	70	52-82	0	Confidence interval of -7 to +5%
Glines Canyon Dam, one unit Elwha River Washington 1953 (Schoeneman and Junge 1954)	Hatchery chinook	Fingerlings	70	52-82	33	
	Hatchery coho	Yearlings	104	70-125	30	Confidence interval of 23 to 37%
Ruskin Dam, unit no. 3 Stave River British Columbia 1953 (Hamilton and Andrew 1954b, cited in Lucas 1962)	Hatchery sockeye	Yearlings	86	56-120	10.5	
Puntledge Development, unspecified unit Puntledge River British Columbia 1955 (Department of Fisheries, Canada 1958)	Hatchery steelhead; hatchery rainbow	Yearlings	125	76-165	41.9	
		Fingerlings	69 46	51-89 38-58	27.5 28.8	Includes 48-h delayed mortalities
	Native mixed salmon	Fry	37	30-53	32.6	
Seton Creek Station, one unit Seton Creek British Columbia 1957 (Andrew and Geen 1958)	Native sockeye	Yearlings	86	70-99	9.2	
Leaburg Plant, unit no. 2 McKenzie River Oregon 1958 (Oregon State Game Commission undated a)	Rainbow	Yearling			4.8	Confidence interval of 3.6 to 5.0
Stayton Plant, unspecified unit Oregon 1959 (Oregon State Game Commission undated b)	Hatchery chinook	Fingerlings			9.1	Confidence interval of 7.5 to 10.7%
	Hatchery steelhead				2.1	Confidence interval of 1.1 to 3.1%

Table 3 (continued)

Hydroelectric installation	Fish species tested	Age and size: Age Class of fish	Age and size: Average length of fish (mm)	Age and size: Range in length (mm)	Mortality: %	Mortality: Comments
Crown Zellerbach, unit nos. 20 and 21 Willamette Falls Oregon 1960 and 1961 (Oregon State Game Commission 1960 and 1961)	Hatchery steelhead	Yearlings	127		25.2	Results of two units averaged for 1960
					99.8	Results of two units averaged for 1961
	Hatchery chinook	Yearlings	102		23.6	Results of two units averaged for 1960
					99.8	Results of two units averaged for 1961
Publishers' Paper Company, unit no. 2 Willamette Falls Oregon 1960 and 1961 (Oregon State Game Commission 1960 and 1961)	Hatchery steelhead	Yearlings	127		12.5	Average of 1960 and 1961 results
	Hatchery chinook	Yearlings	102		14.1	Average of 1960 and 1961 results
Portland General Electric, unit no. 9 Willamette Falls Oregon 1960 (Oregon State Game Commission 1960)	Hatchery steelhead	Yearlings	127		25.9	Confidence interval of 20.1 to 31.7%
	Hatchery chinook	Yearlings	102			
Cushman No. 2, unit no. 33 North Fork of Skokomish River Washington 1960 (Cramer and Oligher 1960)	Hatchery chinook	Fingerlings	57	44-67	All species were combined in test results; range indicates different wicket gate openings	
	Hatchery coho	Yearlings	89	57-102	22.7-41.0	High tailwater
	Hatchery steelhead	Yearlings	127	63-152	26.3-55.4	Medium tailwater
					34.5-47.8	Low tailwater
Cushman No. 2, unit no. 33 1961 (Cramer and Oligher 1961)	Hatchery coho	Yearlings	76	All fish graded to approximate average length	25.2-63.9	Range indicates different wicket gate openings
	Hatchery steelhead	Yearlings	152		38.0-53.0	
Shasta Dam, U-1 Sacramento River California 1962 (U.S. Army Engineer District, Walla Walla 1963)	Hatchery chinook	Yearlings	76	All fish graded to approximate average length	27.9-45.2	Range indicates different wicket gate openings
	Hatchery steelhead	Yearlings	152		10.7-24.6	
	Hatchery rainbow		228		28.8-46.9	
Malay Falls Dam, unspecified units East River Nova Scotia 1975 (Semple 1979)	Hatchery Atlantic salmon	2-year-olds	≥150		10.6	Confidence interval of 8.3 to 12.9%

Source: Adapted from Lucas (1962).

1. Turbine characteristics influenced fish mortality.

2. Mortality associated with mechanical effects was directly related to the physical features of turbine design such as blade clear opening and runner speed.

3. Hydraulic head was not a significant factor in the mortality of fingerlings passing through turbines, except as related to accompanying prevalence of low-pressure areas which may have been encountered in the hydraulic passages.

In these experiments, three different size classes of fish were evaluated (Table 3). Although comparison of the effects of different operational modifications (tailwater levels and wicket gate openings) on the basis of size classes was not possible, some trends were observed. The larger fish such as steelhead (ranging from 63 to 152 mm in length) suffered somewhat greater mortality. No species or size class showed a significant difference in the types of injuries incurred during turbine passage.

In 1961, additional tests were undertaken at Cushman No. 2 to confirm the findings of the previous tests, to investigate problems associated with the size of clear openings within the turbine unit more thoroughly, and to provide more information on the significance of power loadings and operating efficiencies to estimates of mortality (Cramer and Oligher 1961b). The results of these experiments (Tables 2 and 3) confirmed many of the earlier findings and led to further understanding of the effect of wicket gate/blade and blade/blade clear openings on fish survival. Because two distinct size classes of fish were used in these experiments (Table 3), it was possible to conclude that blade clear openings become a more important factor in fish survival as fish size increases. The clear openings between the trailing edge of the wicket gates and the intake edge of the runner blades appeared to be beyond the critical clear openings for a 76-mm fish, but not for a 152-mm fish. These researchers also concluded that, if blade clear openings were adequate for fish passage, turbine

efficiency alone for a given mean draft tube pressure may be an accurate basis for evaluating survival in turbines of similar designs and performance characteristics. Statistical analyses of the data generated in this experiment indicated that the interrelationship of flow conditions causing inefficient turbine operation and inadequate clear openings greatly influences mortality.

Further studies of Francis prototypes were conducted in 1962 at the Shasta Dam Hydroelectric Plant (U.S. Army Corps of Engineers, Walla Walla District 1963). The Shasta plant was chosen because its runner had greater clear openings between blades and operated at a lower speed than that of the Cushman No. 2 units. In these investigations, tailwater levels were held constant, and five different wicket gate openings (and thus their corresponding efficiencies) were tested (Table 2). As in the second group of experiments at the Cushman No. 2 plant, different size classes of fish were tested (Table 3). These experiments showed that greater blade clear openings, slower speed, and a lesser degree of negative pressures in the hydraulic passageways produced lower mortalities than those reported for the Cushman No. 2 plant. The average mortality of chinook salmon juveniles (small-size fish) was 21.5%, that of steelhead (medium-size fish) was 31.0%, and that of rainbow trout (large-size fish) was 33.4%, suggesting that the smaller-sized fish may have higher survival during turbine passage.

The three sets of experiments conducted by the U.S. Corps of Engineers, Walla Walla District, confirmed what model experiments had suggested (U.S. Army Corps of Engineers, Walla Walla District 1963). Turbine characteristics, particularly those associated with part-load or other operating conditions in which low efficiencies were experienced, were of major significance to mortality. Survival under the most efficient operating conditions was high enough to offer encouragement that, through proper precautionary measures in turbine design and operation, successful fish passage through high-head turbines can be achieved.

Although the previous discussion addresses the extent of mortality to different test organisms under different operating conditions, it does not focus on the types of injury. Mechanical types of injuries were the predominant ones encountered in the three groups of experiments conducted on the high-head Francis prototypes. They constituted 76.8% of the injuries incurred by fish tested at the Shasta plant (U.S. Army Corps of Engineers, Walla Walla District 1963). The percentages of dead fish recovered with different types of pressure and mechanical injuries are summarized in Table 4. Contusions and lacerations appeared to be relatively common types of injury suffered by these experimental groups. Other researchers who conducted prototype studies on Francis runners noted high percentages of eye damage (Schoeneman and Junge 1954, Andrew and Geen 1958). This type of injury may result from both mechanical (shearing forces) and pressure (rapid decrease in pressure) effects. When accompanied with abrasions or lacerations, eye damage was usually considered to be a mechanical injury.

The extent and magnitude of pressure effects are more difficult to assess. It is generally agreed that high static heads are not harmful to juvenile salmonids. Although laboratory investigations have experimented with rapid pressure changes (Clausen 1934, Brawn 1962, Muir 1959, and Tsvetkov et al. 1971), there is still disagreement as to the effects of instantaneous exposure to pressure waves, such as those occurring across the runner and upon entering the draft tube. Salmonid fishes have open swim bladders and may be able to release or take in air to accommodate pressure changes. On the basis of a series of laboratory experiments, Muir (1959) contended that, in Francis and propeller turbines at low to intermediate heads, significant mortality was not likely to result from the exposure of salmon fingerlings to a partial vacuum if unaccompanied by cavitation.

Table 4. Types of injury experienced in turbine-related fish mortality investigations conducted by U.S. Army Corps of Engineers, Walla Walla District

Investigation	Occurrence of injury (%) by type[a]											
	Abrasion	Contusion	Decapitation	Nonspecific internal hemorrhage	Organ-specific hemorrhage	Laceration	Eye damage	Internal rupture	Damaged operculum	Torn isthmus	Maceration	No apparent injury
Francis runners												
Cushman No. 2 Hydroelectric Plant (Cramer and Oligher 1961b)												
Coho salmon	3.1	31.5	4.6	10.5	1.9	22.6	17.7	8.0				
Steelhead trout	10.9	30.6	8.9	11.6	4.3	20.5	5.0	8.1				
Shasta Hydroelectric Plant (U.S. Army Engineer District, Walla Walla 1963)												
Jan. '62 -												
Chinook salmon (small)	15.5	14.0	7.3	6.5	6.1	15.9	20.7	2.8	5.8			5.3
Steelhead trout (medium)	6.5	20.3	13.0	9.2	7.7	17.2	8.0	3.5	8.8			5.8
Rainbow trout (large)	13.5	26.7	5.5	5.9	12.1	19.0	1.5	4.4	10.3			1.1
Nov. '62 -												
Chinook salmon (small)	9.0	26.9	4.3	5.1	6.4	5.6	11.6	3.5	18.1	1.7	0.3	7.5
Steelhead trout (medium)	1.3	15.9	20.2	4.5	7.1	13.1	2.5	1.7	10.8	8.0	12.6	2.3
Rainbow trout (large)	3.4	18.8	13.7	4.3	8.5	6.0	1.7	1.7	13.7	16.2	7.7	4.3
Kaplan runner												
Big Cliff Hydroelectric Plant (Oligher and Donaldson 1966)												
Head of 28 m	0.0	5.1	9.2	11.3	41.5	6.7	10.8	4.3	4.9	0.8		5.4
Head of 25 m	0.7	7.3	6.1	10.8	47.3	3.4	11.5	6.6	1.6	1.1		3.6
Head of 22 m	2.3	3.9	3.9	13.7	49.9	2.2	9.2	1.5	4.9	0.8		7.7

[a]Types of injuries are defined as follows (U.S. Army Corps of Engineers, Walla Walla District 1963):
Abrasion--rubbing or scraping off of skin.
Contusion--bruise.
Decapitation--head severed from body.
Nonspecific internal hemorrhage--internal bleeding from nonspecific organ.
Organ-specific hemorrhage--internal bleeding from specific organ.
Laceration--ripping, tearing, or cutting of tissue.
Eye damage--hemorrhaged, missing, or otherwise damaged eyes.
Internal rupture--body "pulpy" as though badly beaten (occasionally observed of a specific organ).
Damaged operculum--severe damage as from pressure forces on anterior portion of operculum, generally accompanied by torn gill arches.
Torn isthmus--severed or severely lacerated, generally accompanied by torn gill arches.
Maceration--body, or body part severely chewed up.
No apparent injury--death probably due to shock or noninjury cause.

2.4.4 Prototype Studies with Kaplan Runners

Experiments conducted on Kaplan prototypes are summarized in Tables 5 and 6. Of these, the ones performed at McNary and Big Cliff Dams are cited as key examples. Today, the work of Schoeneman et al. (1961) is still considered to be one of the best estimates of fish mortality resulting from passage through Kaplan turbines. In their investigations of mortality at these two facilities, these researchers found no significant differences between fish mortality at Big Cliff and McNary when turbines were operated at power loadings (75 and 80% wicket gate opening) that slightly exceeded the maximum efficiency loading. When the data were combined, mortality from turbine passage was estimated at 11% with a 95% confidence interval of 9 to 13%. At Big Cliff, experimentation with a 40% wicket gate opening (a power loading considerably less than the maximum efficiency loading) using fingerling chinook salmon yielded an estimate of 21% mortality, with a confidence limit of 17 to 24%. Compared with results obtained during turbine operation at higher power loadings, this difference is significant. Schoeneman et al. (1961) suggested that the difference may have arisen as a result of increased cavitation, which usually accompanies part-load conditions (Sect. 2.2). The authors pointed out that a wicket gate setting of 40% would be unlikely during the main portion of downstream salmon migration because of the large volume of water available for generating.

Work initiated at Big Cliff in 1957 was continued in 1964 and 1966 (Oligher and Donaldson 1966) and in 1967 (U.S. Army Corps of Engineers, Walla Walla District 1979), primarily to provide information on Kaplan runners similar to that generated for the prototype Francis units. This was deemed particularly valuable in view of the fact that the low-head dams on the Columbia and Snake Rivers contained, or were projected to contain, only Kaplan runners. Test conditions in the 1964 experiments consisted of varying wicket gate openings so that power loadings would range from below the cavitation point to full-load for each of three different hydraulic

Table 5. Summary of prototype investigations of turbine-related fish mortality conducted at hydroelectric installations equipped with Kaplan runners where experimental modifications in operating conditions were employed.

Hydroelectric installation	Rated normal head (m)	Runner speed (rpm)	Plant Sigma		Number of runner blades	Clearance between runner blades (cm)	Position of runner in relation to tail-water elevation (m)	Wicket gate opening	Mortality	
			Actual	Min. recom'd.					%	Comments
Bonneville Dam, unspecified units Columbia River Oregon 1939-1948 (Holmes 1952, cited in Lucas 1962)	18	75	0.64 (estimated)	0.53	5				11.5	Based on adult returns
McNary Dam, units nos. 2 and 4 Columbia River Oregon 1955-1956 (Schoeneman et al. 1961)	24	86	0.73	0.50	6		-7.6 to -9.1	0.75 0.80	8 13	
Big Cliff Dam, one unit North Santiam River Oregon 1957 (Schoeneman et al. 1961)	27	164	0.42	0.40	6		-1.5	0.40 0.80	21 11	Confidence interval of 17 to 24%; combined fingerling and yearling results
Big Cliff Dam, one unit 1964 and 1966 (Olligher and Donaldson 1966)	Experimental 28							0.330 0.375 0.485 0.591 0.682 0.745	10.2 10.1 8.9 5.0 8.2 10.2	
	Experimental 25							0.425 0.535 0.640 0.750 0.805 0.855	9.5 14.7 11.7 8.1 8.4 5.2	
	Experimental 22							0.472 0.610 0.750 0.810 0.890 1.00	10.9 11.4 5.0 7.8 8.3 16.6	

Table 5 (continued)

Hydroelectric installation	Rated normal head (m)	Runner speed (rpm)	Plant Sigma: Actual	Plant Sigma: Min. recom'd.	Number of runner blades	Clearance between runner blades (cm)	Position of runner in relation to tail-water elevation (m)	Wicket gate opening	Mortality: %	Mortality: Comments
Big Cliff Dam, one unit 1967 (U.S. Army Corps of Engineers 1979)	Experimental 28							0.350	8.7-17.1	Range indicates that test fish results are combined
								0.599	9.0-11.3	
								0.835	8.3-18.9	
	Experimental 27							0.410	3.6-4.0	
								0.590	6.4-15.0	
								0.624	5.7	
								0.896	10.0	
	Experimental 25							0.385	14.4-16.0	
								0.448	6.2-13.8	
								0.640	7.4-7.5	
								0.832	14.6-15.5	
								0.920	12.0-24.1	
	Experimental 23							0.435	10.0-11.4	
								0.625	14.3-17.6	
								0.673	7.9-13.9	
	Experimental 22							0.440	12.0-12.1	
								0.680	3.3	
								0.983	3.2	
Walterville Plant, unspecified unit, McKenzie River Oregon 1958 (Oregon State Game Commission undated a)	Experimental 17							0.61	2.5	Confidence interval of 0.6 to 4.4
								0.77	7.5	Confidence interval of 4.8 to 10.2%
Tobique Narrows, unit no. 1 Tobique River New Brunswick 1959 (MacEachern 1959)	23	225	0.72	0.57	5	Open-76			17	Does not include delayed mortality
Tobique Narrows, units nos. 1 and 2 1960 (MacEachern 1960)									16-24	Range indicate that test fish results are combined; delayed mortality included
Tusket Falls, units nos. 1, 2, and 3 Tusket River Nova Scotia 1960 (Smith 1960)	6	225	0.92	0.70	4	Open-51; closed-15	+1.5 to +2.1	0.75	16.5-52.9	Range indicates that test fish results are combined; delayed mortality included
Tusket Falls, units nos. 1, 2, and 3 1961) (Smith 1961)							variable	0.75-0.80	50.3	Includes delayed mortality

Source: Adapted from Lucas (1962).

for different test fish species and size ranges

Hydroelectric installation	Fish species tested	Age class of fish	Average length of fish (mm)	Range in length (mm)	Mortality %	Mortality Comments
Bonneville Dam, unspecified units Columbia River Oregon 1939-1948 (Holmes 1952, cited in Lucas 1962)	Chinook	Fingerlings			11.5	Based on adult returns
McNary Dam, units nos. 2 and 4 Columbia River Oregon 1955-1956 (Schoeneman et al. 1961)	Hatchery chinook	Fingerlings	53	45-60	9-13%	
Big Cliff Dam, one unit North Santiam River Oregon 1957 (Schoeneman et al. 1961)	Hatchery chinook	Fingerlings Yearlings	53 121	45-60 95-145	12 9	
Big Cliff Dam, one unit 1964 and 1966 (Olligher and Donaldson 1966)	Hatchery chinook	Yearlings-1964 Yearlings-1966	 102	76-102	4.5-22.0 2.9-18.3	Range indicates that results from different experimental conditions are combined
Big Cliff Dam, one unit 1967 (U.S. Army Corps of Engineers 1979)	Hatchery chinook Hatchery steelhead				3.6-24.1 3.2-17.1	Range indicates that results from different Experimental conditions are combined
Walterville Plant, unspecified unit McKenzie River Oregon 1958 (Oregon State Game Commission undated)	Hatchery rainbow	Fingerlings			2.5-7.5	Range indicates that results from different experiments are combined
Tobique Narrows, unit no. 1 Tobique River New Brunswick 1959 (MacEachern 1959)	Hatchery Atlantic salmon	Yearlings		89-140	17	Does not include delayed mortality
Tobique Narrows, units no. 1 and 2 1960 (MacEachern 1960)	Hatchery Atlantic salmon	Yearlings		89-140 140-216	16.5 23.7	Includes delayed mortality
Tusket Falls, units nos. 1, 2 and 3 Tusket River Nova Scotia 1960 (Smith 1960)	Hatchery Atlantic salmon	Yearlings (post-smolt)	188	127-229	16.5	Includes delayed mortality
	Native alewife	Fingerlings	51		14.3	Does not include mortality
			84		4.4-17.1	Range indicates that results from different experimental conditions are combined, delayed mortality not included
Tusket Falls, units nos. 1, 2, and 3 1961 (Smith 1961)	Native alewife	Fingerlings	53 64 86		60.1 46.6 44.1	Includes delayed mortality

Source: Adapted from Lucas (1962).

heads (22, 25, and 28 m). The experiments conducted at Big Cliff in 1966 and 1967 had basically the same type of experimental design, except that in 1967 tests were conducted at two additional hydraulic heads (Table 5), and both chinook and steelhead were used as test organisms (Table 6).

In the Big Cliff experiments, the results showed the same general pattern as in the tests conducted with the Francis turbines; that is, maximum survival occurred in the range of highest operating efficiency. This pattern is illustrated in Figure 8, which shows the combined results of the 1964 and 1966 tests conducted with a head of 22 m. In these results, mortality as low as 5% was observed at the greatest operating efficiency (Oligher and Donaldson 1966).

Results of the Big Cliff experiments were used as the basis for designing a Kaplan unit for Foster Dam on the South Santiam River. This unit was modified to provide for the maximum survival of fish. However, results of experiments conducted there in 1969 indicated that fish mortality did not differ significantly from that of an unmodified unit operating at maximum efficiency (Raymond Oligher, U.S. Army Corps of Engineers, Walla Walla District, personal communication). According to Bell (1979), details of the Foster Dam experiments and more information on the 1967 Big Cliff study will be included in Bell's revised compendium on fish passage through turbines. This document is as of yet unpublished (Ed Mains, U.S. Army Corps of Engineers, North Pacific Division, personal communication).

One species, the chinook salmon, was used almost exclusively throughout the Big Cliff investigations. Since different size classes were not tested, no conclusions about size-dependent mortality can be drawn from the Kaplan prototype studies. However, observations on the types of injuries incurred by test fish were made; these are included with the Francis results in Table 4. A higher proportion of pressure-type injuries, as evidenced by the relatively high percentages of hemorrhages observed, were noted in the Kaplan prototype studies. These may have resulted from the production of conditions leading to cavitation during the experimental modifications.

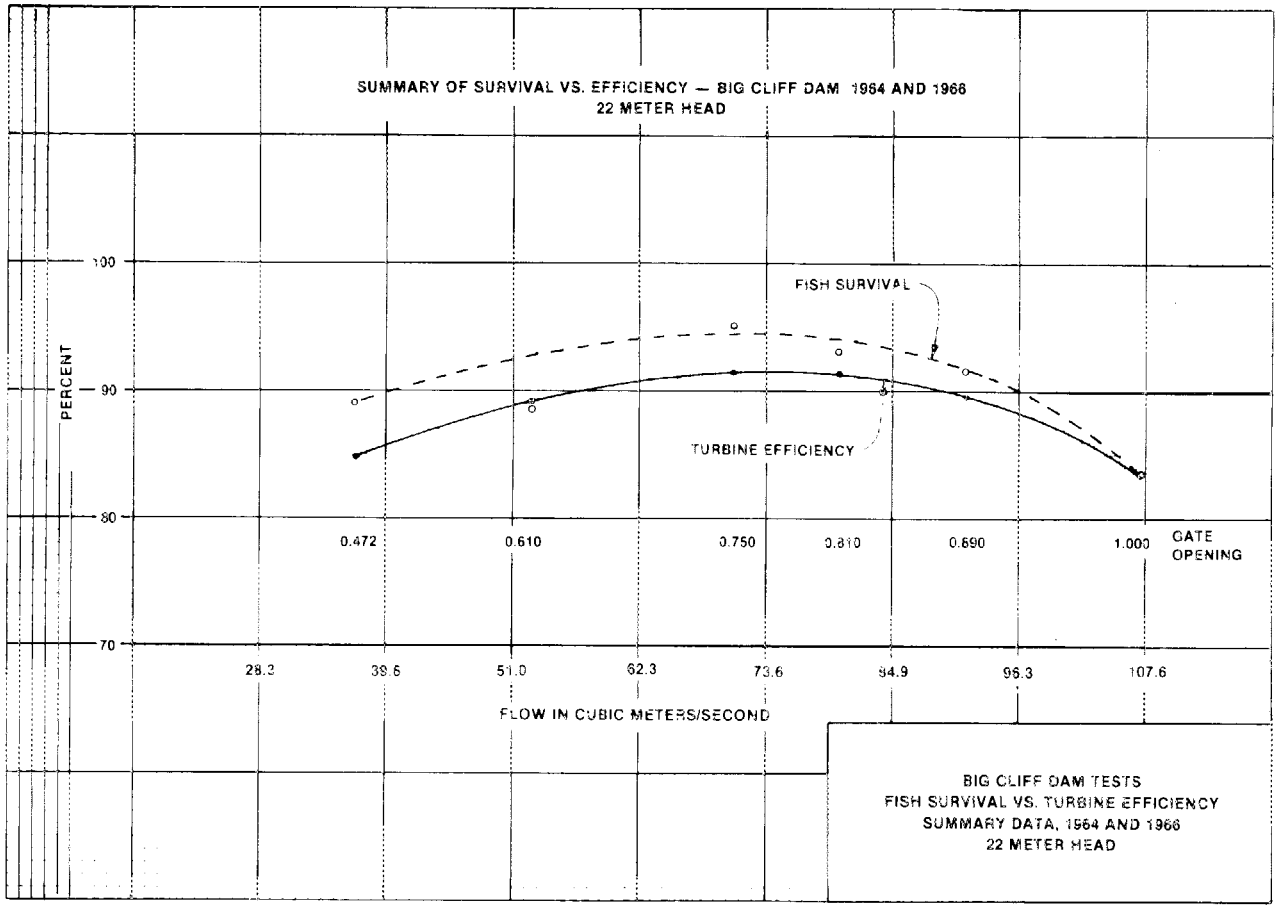

PLATE 8

Figure 8. Fish survival versus turbine efficiency. Source: Olligher and Donaldson 1966.

Many of the injuries suffered by the turbine-passed fish appear to resemble those of gas bubble disease. Gas supersaturation of water flowing through a turbine usually does not exist (Ebel 1969), but it can occur when turbines are vented to reduce cavitation. Fish kills below the Kaplan unit at Mactaquac Dam on the Saint John River in New Brunswick were attributed to turbine venting during low generating levels (MacDonald and Hyatt 1973).

Blade/blade and gate/blade clear openings were not studied in the Kaplan prototype experiments as they were in the Francis studies. The analysis by Long and Marquette (1967), however, has provided some insight into potential lethal areas in Kaplan runners. The pattern of water flow in turbine intakes and spiral cases can be considered well ordered. Studies of hydraulic models indicate that flows near the intake ceilings move through the tops of the openings between wicket gates and that flowing water near the intake floors passes through the bottom of these openings. Because the runner is positioned only a small distance downstream from the wicket gates, the ceiling and floor flows probably maintain the same relationship as they pass the blades (Long and Marquette 1967). Studies conducted by National Marine Fisheries Service personnel at the Dalles and McNary Dams found that fingerling salmonids concentrated near the ceilings of turbine intakes (Long 1968a). This behavioral characteristic probably causes most of the migrant fish to pass the turbine runner at or near the hub in vertical-shaft Kaplan units. The clear openings between (1) the guide vanes and the wicket gates, (2) the wicket gates and the runner blades, and (3) the blades and the hub may be insufficient for successful fish passage (Long and Marquette 1967). Potentially unsafe areas are shown in Figure 9.

The investigations undertaken at the Dalles Dam not only established the vertical distribution of juvenile fish in the turbine intakes, but also recorded their diel movement (Long 1968a). Day-night comparisons showed that most chinook salmon, steelhead trout, and ammocoetes of the Pacific lamprey were caught at night. This finding suggested a fortunate relationship between the timing of

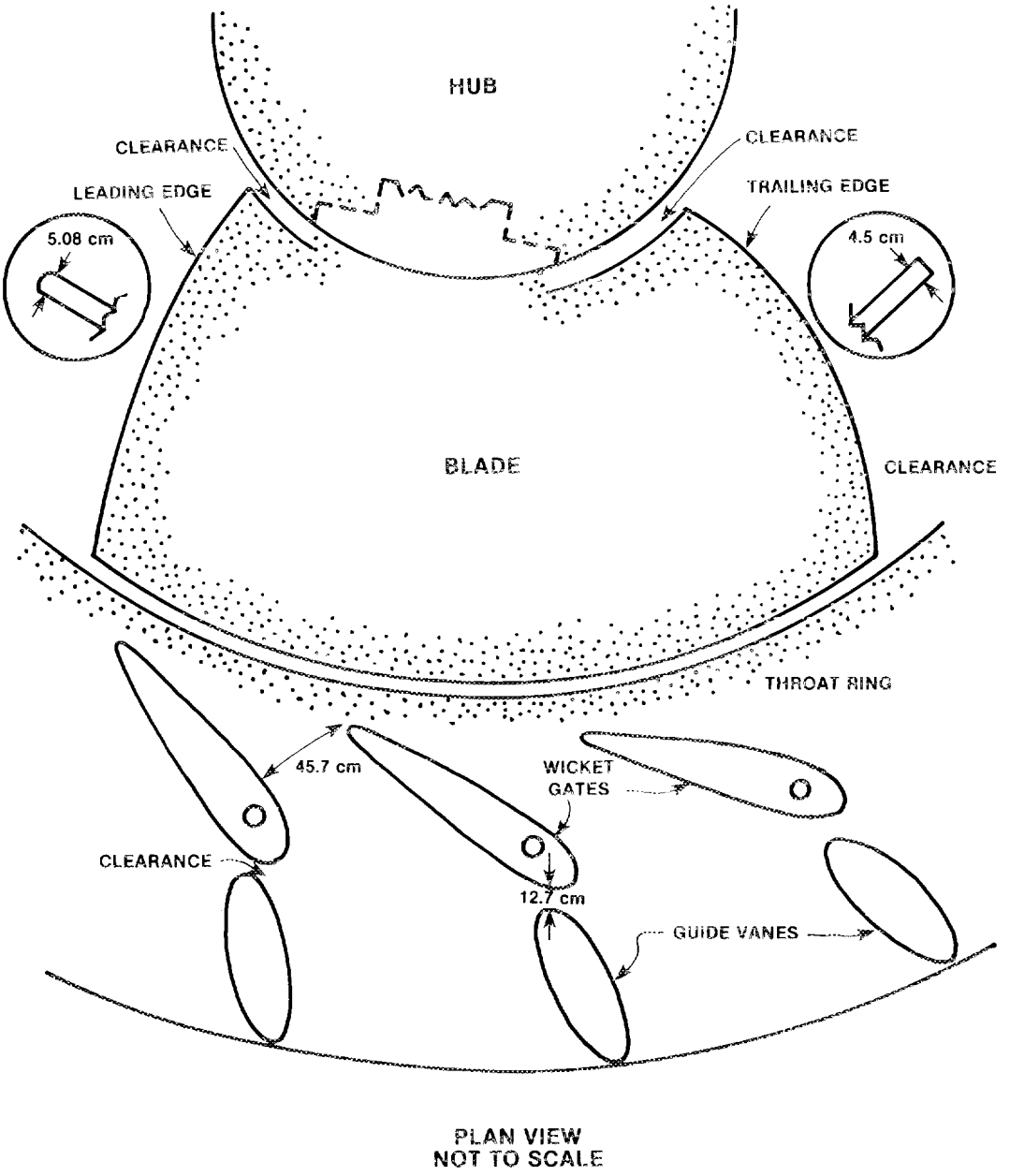

Figure 9. Top view of Kaplan runner showing clear openings between the hub and runner blade, the wicket gates and the blades, and the guide vanes and the wicket gates. Source: Long and Marquette 1967.

fish passage and the normal schedule of turbine loading. Night movement through the turbines favor higher survival because reduced power demands may increase the flexibility for adjusting turbine loads to maximize fish survival (typically near 70% of the maximum rated capacity).

As in the example cited above, studies conducted by the National Marine Fisheries Service on the behavior of downstream migrating juvenile salmonids have proven helpful in understanding fish passage through Kaplan turbines. Field research at Ice Harbor Dam on the Snake River revealed the importance of predation to estimates of turbine-related fish mortality (Long 1968b). Of the total estimated 32% loss of test fish, only losses of 10 to 19% were attributable to the effects of turbine passage. The remaining 13 to 22% losses resulted from predation on yearling coho salmon by seagulls and squawfish in "backroll" areas of the tailrace.

To provide a basis for compensation of fish losses and to develop fish protection strategies, recent mortality investigations have been conducted at two of the private utility dams on the mid-Columbia River. The study done at Bulb Unit No. 5 of Rock Island Dam in 1979 estimated the mortality of yearling coho salmon smolts to be 7.0% with a 95% confidence interval of 4.4 to 9.6% (Olson and Kaczynski 1980). Steelhead smolt mortality was 3.1% with a 95% confidence interval of ±9.0%. The eight bulb units installed at Rock Island Dam, equipped with horizontal-shaft Kaplan runners, are projected to be more efficient than the more conventional, vertical-shaft Kaplan units under the low hydraulic head conditions prevailing at this dam. However, data are too preliminary to establish whether the survival rate of fish passing through bulb units is higher than the survival rate of fish that pass through other Kaplan turbines.

Turbine passage was assessed at the conventional Kaplan units installed at Wells Dam during the spring of 1980 (Bernie Leman, Chelan County Public Utilities District, personal communication). Results of these studies are not currently available.

2.4.5 Prototype Studies with Other Runners

Most of the prototype studies (and all of the model studies) were performed on Francis or Kaplan runners. One series of turbine-related fish mortality investigations was conducted with a type of impulse runner, the Pelton wheel (Oregon State Game Commission 1961), which was installed at Units 7 and 8 of the Willamette Falls Plant run by Portland General Electric Company. Mortality of chinook juveniles ranged from 10.5 to 11.8%, and that of steelhead ranged from 7.7 to 9.9%. The limited information does not permit comparison with reaction turbine studies.

2.5 Analysis of Studies Cited

The investigations reviewed in this document used a wide variety of methods and were conducted over a broad range of turbine operating conditions. The diversity of methods and experimental conditions as well as factors such as health of fish, residualism (a condition that may occur because of delays in migration), predation, and hydrologic flow regimes may account for the varying estimates of mortality. The compendium of Bell et al. (1967) presented analyses of different variables in fish mortality investigations conducted through 1966 and reviewed mathematical models formulated for turbine passage. Until the revised compendium is available, the 1967 document will continue to be the most comprehensive review of mortality resulting from turbine passage. Its analyses for certain areas of concern are included in the following sections.

2.5.1 Recovery Methods and Computation of Mortality

Recovery methods are of paramount importance in the computation of mortality. Their efficiency depends on the recovery gear used and the level of effort employed in the recovery operations (Olson and Kaczynski 1980). Bell et al. (1967) compared test results in which complete recovery methods (nets fixed to draft tube exits) were used with results obtained by downstream recovery methods (partial recovery methods) or by returns of marked adult fish. This comparison indicated that immediate mortalities, plus 3- to 5-d holding mortalities, should give an accurate estimate of total mortality resulting from turbine passage.

The superiority of complete recovery methods over partial ones, or vice versa, depends on site-specific conditions and the sources of indirect mortality. With complete recapture techniques, nearly total portions of the released fish may be immediately recovered, and smaller sample sizes can be used to obtain the same degree of statistical accuracy. In addition, the nets theoretically protect test and control fish from predation. However, if indirect mortality from collection in the complete recovery nets is significant, then downstream recapture methods may be more efficient. Downstream recovery methods may eliminate the stress of full recovery nets, but may recapture fewer fish because of sources of mortality (e.g., predation) not directly attributable to turbine passage.

2.5.2 Study Type

Based on regression analysis of model turbine data, Bell et al. (1967) concluded that prediction of prototype performance from the model studies did not appear feasible because of the large size of the fish relative to that of model runners (Sect. 2.3.3).

2.5.3 Francis and Kaplan Runners

Multiple regression analyses indicated that the causes for fish losses in each type of runner were not the same (Bell et al. 1967). Combined data from the Francis prototype tests conducted by the U.S. Army Corps of Engineers, Walla Walla District, indicated that the percent wicket gate opening is the most important variable. Sigma and fish length were next in importance. Important variables for Kaplan turbines proved to be the square root of the head and sigma. These results may be somewhat complicated by the fact that several factors were being varied simultaneously during the field tests. Despite these complications, these findings logically followed from the engineering design of the turbines. The efficiency of Kaplan turbines depends on blade angle adjustments under certain heads and power loadings. As discussed earlier, the magnitude of mechanical injuries appeared to be a function of clearance between wicket gates and runner blades in the Francis prototypes. This relationship was not observed in the Kaplan prototype studies. In both studies, however, maximum fish survival occurred at the point of highest total operating efficiency. Bell (1980, cited in Olson and Kaczynski 1980) contends that fish passage efficiency, a direct function of fish survival, may vary from 1 to 3% more than the turbine operating efficiency. Mortality estimates of 5 to 10% appear inevitable, even within the region of highest operating efficiency.

2.5.4 Fish Species and Size

Fish mortality as a result of passage through turbines has been studied primarily with juvenile salmonids. Larger-sized fish have incidentally been recovered in the sampling gear (U.S. Army Corps of Engineers, Walla Walla District 1979), but they have not been systematically introduced into penstocks, recovered in tailraces, and examined to determine the cause and extent of mortality. Although

there are anadromous species such as the Atlantic salmon whose adults do not die after spawning but return to the sea, it is assumed that most larger fish would be prevented from entering the turbine intakes by screens or other structures. No differences in mortality among species per se were noted in the experiments of the U.S. Army Corps of Engineers, Walla Walla District; however, fish size was an important variable in the experiments with Francis prototypes. Because so many overlapping size groups have been used in turbine-passage investigations and many recovered fish were not measured to detect size-selective recovery differences, higher correlations of size with mortality may be masked.

3. PUMPED-STORAGE (REVERSIBLE) HYDROELECTRIC FACILITIES

Although many areas of research on fish mortality resulting from turbine passage at conventional hydroelectric facilities have been addressed, limited research on fish mortality resulting from turbine passage has been conducted at pumped-storage hydroelectric facilities. The Ludington Pumped Storage Power Plant, Ludington, Michigan, is not only the largest pumped-storage project in existence (maximum generating capacity, 1872 MW), but also the subject of the most extensively documented turbine mortality studies. As such, it will be used as a model facility for the purpose of describing a pumped-storage operation.

3.1 Background

A pumped-storage facility operates by pumping water to an upper reservoir during off-peak hours and storing it there for generating electricity during periods of peak power demand. Electricity is produced as the released water flows through reversible pump-turbines. Pumping normally occurs at night and over weekends, while generating occurs during the weekday mornings and evenings (Serchuk 1976). This "stored energy" approach to the energy problem requires a source of excess electricity because 10.8×10^6 J (3 kWh) of pumping energy is needed for every 72×10^6 J (2 kWh) of generated energy. Although an overall loss of energy occurs, the process is economically feasible because energy used for the pumping phase is nonpeak energy and thus is available at reduced cost (Clugston 1980).

Lake Michigan serves as the lower reservoir of the Ludington facility. The upper basin is a man-made reservoir with a total surface area of 340.7 hectares (ha) and a total capacity of 102.2 billion liters. Maximum water depths range from 34 m at the north end

to 30 m at the south end. During plant operation, the vertical fluctuation can be as great as 20 m (Serchuk 1976). Water is pumped from the lake to the reservoir (113 m above the lake) by means of six Hitachi reversible pump-turbine, motor-generator units. These pump-turbines are vertical, single-shaft, spiral, Francis-type turbines, each having a diameter of 8.4 m and a weight of 291,000 kg (Gerkowski and Dellas 1978). During the pumping phase of operation, the generators function as motors, driving the hydraulic turbines that act as pumps. As the generating cycle is initiated, releasing water from the upper reservoir through the turbines, the turbine direction reverses, spinning the generators, which in turn produce electricity. The pumping velocity per pump-turbine is 314 m^3/s for 113.6 m effective head (Gerkowski and Dellas 1978). When all turbines are operable, water is transferred at a maximum flow of 2151 m^3/s and 1886 m^3/s during the generating and pumping phases, respectively (Serchuk 1976).

In general, pumped-storage turbine designs differ only slightly from those of the Francis wheel of conventional hydroelectric projects greater than 30 m in height. The wheels are submerged deeply enough in the tailwater of pumped-storage projects to avoid cavitation that causes damage to the reversible pump-turbines, negative pressure areas, or pockets around runners and spiral cases (Hauck and Edson 1976).

Plant operation effects on anadromous fish may differ according to whether the pumping or generating cycle is being used. When operating in the generating phase, the discharge velocity may attract upstream migrants that could be blocked at the powerhouse. During the pumping mode, reverse or circular currents may be created which could inhibit the normal migratory patterns. These currents may influence the path followed by downstream migrants searching for an outlet. By being attracted to the currents, they could be drawn through the pumps to the upper reservoir. In addition, as the upper reservoir begins to fill, resident fish could be drawn through the pumps and into the upper level. The impact of a pumped-storage facility on migratory

fish may be minimized by adjusting the operation schedule to accommodate the habits of the species involved. This can be accomplished by modifying the intake structure to reduce current flow as well as scheduling plant operation during times of the day or season when movement is minimal (Hauck and Edson 1976).

In a 1973 survey of state fishery agencies by Schoumacher (1976), several areas of concern were identified as a result of their involvement with pumped-storage facilities. Topics most often cited as potential areas for research include entrainment of fish in the pump-turbines, water level fluctuations in the reservoirs, adverse changes in the quality or quantity of downstream releases as they affect the migration of anadromous fish, and effects of operations on stratification in the reservoirs (Schoumacher 1976).

Water withdrawn by pumped-storage stations entrains organisms in both upper and lower pools. During entrainment, fish mortality is affected by abrasion and collision, pressure and velocity changes, and acceleration effects (Miracle and Gardner 1980). Abrasion and collision damages occur when organisms come into contact with fixed or moving objects, such as intake pipes, turbine blades, and suspended solids. Pressure changes that are most likely to occur at pumped-storage plants are low pressures within turbines, partial vacuums caused by cavitation, and high pressures caused by elevation differences between upper and lower reservoirs. Shearing forces are encountered in areas of extreme turbulence or near the inner boundaries of intake pipes and turbines. Although shearing injuries were not seriously considered in early studies, Bell (1973) describes it as a major cause of fish mortality during turbine passage. Acceleration effects occur within the intake pipes and discharge area, where turbulent eddies are created as a result of changing water direction and velocity. Mortality factors are classified into four categories by Bell (1973): (1) mechanical damage (contact with fixed or moving equipment); (2) pressure-induced damage (exposure to low-pressure conditions within the turbine); (3) shearing action (caused by passage through areas of extreme turbulence or boundary

conditions); and (4) cavitation (exposure to regimes of partial vacuum).

3.2 Methods of Estimating Fish Mortality

As monitoring attempts were undertaken within the pumped-storage facilities, sampling procedures were hindered by characteristics unique to pumped storage. The major sampling impediments are daily water level fluctuations and high water velocities at intake and discharge areas. In addition, each facility poses its own constraints resulting from its physical design and operation schedule (Mathur and Heisey, in press). An excellent summary of biomonitoring methods in use at the various pumped-storage projects (Table 7) has been tabulated by Mathur and Heisy (in press).

During 1974 and 1975, the first intensive field assessment of fish turbine mortality at a pumped-storage facility was conducted at the Ludington plant. In earlier Ludington studies, emphasis was placed on developing recovery methods that would contribute to a reliable estimate of mortality rate (Tack and Liston 1973). The method used for recovery was the process developed by the Montpelier, Vermont, Bureau of Sport Fisheries and Wildlife, as reported by Johnson (1970). Styrofoam eggs, used as flotation devices, were attached to the fish behind the dorsal fin just before the fish was released into the turbine inlet system. Serchuk modified this procedure in his 1974 and 1975 experiments, preferring jaw attachment of styrofoam tags. Fish introduction was accomplished with a weighted paper sack placed in front of the draft tube opening. The sack, containing a small sandbag and a gallon of water, was lowered into the water; when it was saturated, it disintegrated, releasing the enclosed fish into the draft tube (Serchuk 1976). Serchuk's finalized procedure included (1) the use of commercially procured rainbow trout as test specimens; (2) anesthetization of fish; (3) tagging with styrofoam

Table 7. Biomonitoring methods used to assess effects of various pumped-storage projects on fish populations

Project	Reservoir	Elevation fluctuations	Methods
Mt. Elbert, CO	Upper-Upper Reservoir (under construction)	?	
	Lower-Twin Lakes	?	Gill nets, creel census, scuba observation, underwater photography, straining nets
Ludington, MI	Upper-Ludington Reservoir	Up to 20 m/d	Fish tagging, float-tagged fish, visual surveys for fish mortalities (trap net, seine, acoustical methods, rotenone used only during filling), experimental gill nets, trawl, sonic tracking
	Lower-Lake Michigan	None	Visual surveys for fish mortalities, experimental gill nets, seine, scuba observations, trawl, trap net
Bear Swamp, MA	Upper-Upper Reservoir (closed to the public)	13 m/d	Gill net, beach seines, acoustic methods, boat shocker, gill net, rotenone, creel census only in river below lower reservoir
	Lower-Lower Reservoir (closed to the public)	12 m/d	Boat shocker, gill nets

Table 7 (continued)

Project	Reservoir	Elevation fluctuations	Methods
Blenheim-Gilboa, NY	Upper-Upper Blenheim-Gilboa Reservoir	10 m/d	Experimental gill nets, trap net, block net, electroshocker, 0.5-m towed plankton net, push nets (larval fish), visual surveys for fish mortalities
	Lower-Lower Blenheim-Gilboa Reservoir	10 m/d	
Northfield Mountain, MA	Upper-Northfield Mountain Reservoir (closed to the public)	8 m/d	Gill net, electroshocker, visual surveys for fish mortalities, float-tagged fish
	Lower-Turners Pool	1 m/d	Creel census, electroshocker, fish tagging, telemetry (sonic and radio tracking), visual surveys for fish mortalities
Smith Mountain, VA	Upper-Smith Mountain Lake	1 m	Gill net, cover rotenone, creel census
	Lower-Leesville Lake	4 m/week up to 3.5 m/d	Plankton nets, electroshocker, cove rotenone, artificial spawning substrate, scuba observations, visual observations for fish nets, creel census

Table 7 (continued)

Project	Reservoir	Elevation fluctuations	Methods
Jocassee, SC	Upper-Jocassee Reservoir	2 m/week	Frame trawl (ichthyoplankton sampling), cove rotenone, creel census, gill net, 1-m plankton net, biotelemetry
	Lower-Keowee Reservoir	1 m/week	Frame trawl (ichthyoplankton sampling), 1-m plankton net, gill nets, electroshocker, cove rotenone
Muddy Run, PA	Upper-Muddy Run Pond	9 m/d; 15.6 m/week	Creel census, meter plankton nets, visual observations for fish nests and fish mortalities, trap net, trawl, seine, gill net, trammel net, rod and reel, float-tagged fish, block net
	Lower-Conowingo Pond	1 m/d	Trap net, ½- and 1-m plankton nets, electroshocker, creel census, visual observations for fish mortalities, gill nets, seines

Table 7 (continued)

Project	Reservoir	Elevation fluctuations	Methods
Banks Lake, WA	Upper-Bank Lake	4.6 m up to 40 m[a]	Fish tagging, underwater closed-circuit television, fry traps, scuba observations, creel census, acoustical methods, straining nets, gill nets, visual surveys and boat equipped with underwater viewing window, hydraulic samplers
	Lower-Franklin D. Roosevelt Reservoir		Gill net, acoustic methods, tow net

[a]Drawdowns are due primarily to water withdrawal for irrigation purposes or flood control.

Source: Mathur and Heisey (in press).

float; (4) recording of length measurements; (5) introduction of fish in weighted paper sack into area of turbine intake; (6) recapture of dead and live specimens near discharge area; (7) retention of live specimens in a holding facility for 72 h to assess delayed mortality; and (8) examination of both dead and live fish for turbine damage. The 1975 studies also included a control group for determining handling mortality (Serchuk 1976). A board passage study in 1974 established the relationship between object size and mechanical damage. Pine and spruce boards with attached sandbags were subjected to the same turbine passage introduction and retrieval procedure as were the fish specimens.

The described procedure at Ludington dealt primarily with salmonids because of their importance to Lake Michigan's thriving sport fishery. Liston (1979) bases annual salmonid mortality estimates on data retrieved from mark and recapture studies, weekly reservoir gill net samples, turbine-related mortality tests, and reservoir residence-time studies. To obtain mortality data on all species entering the turbines as well as to improve the accuracy of mortality estimates, sieve net sampling was initiated in 1978. The sieve net sampling technique would directly and immediately tally the fish killed during pump-turbine passage (Liston et al. 1980). Although this technique considered only pumping-mode, turbine-related mortality, Liston also conducted generating-mode mortality studies using rainbow trout by following Serchuk's previous method. Present Ludington biomonitoring techniques, aimed at providing a more accurate estimate of fish population needed for mortality studies, include gill netting, sieving, and trawling. The data collected by these methods will provide an insight on seasonal and spatial abundance and distribution, which will serve as a base for comparing entrainment rates. The Ludington project was the only investigation in which gill net catches were adjusted for gear efficiency and used to ascertain fish loss during pump-turbine passage (Liston 1979). To better understand the role of currents and eddies that occur after pumping

and generating in attracting salmonids, hydroacoustic sampling is being used to assess populations near intake structures.

In a study of larval fish passage at the Jocassee Pumped Storage Station in South Carolina, Prince and Mengel (1980) used plankton nets for collection before and after turbine passage during both generating and pumping cycles. In 1977, difficulties in collection were experienced because the nets, which were placed in the tailrace, were turned sideways by the turbulence and eddies at this location. To eliminate this problem when the studies continued in 1978, nets were suspended from boats positioned further downstream in less turbulent water. Here, samples were obtained after the larvae passed through the generating mode, but before they entered the pumping phase.

Heisy and Mathur (1980) conducted turbine mortality experiments at the Muddy Run Pumped Storage Pond in southeastern Pennsylvania by using methods similar to those described by Johnson (1970). Fish, outfitted with flotation devices, were introduced in the intake area and recovered in the intake-discharge canal during the pumping phase. Percent mortality was estimated for adult channel catfish, brown bullhead, white crappie, carp, and smallmouth bass.

Extensive monitoring activity to assess fish populations in a pumped-storage facility at Banks Lake, Washington, was conducted by the University of Washington Fisheries Research Institute (Stober et al. 1977). Details of the sampling apparatus are shown in Figure 10. Figure 11 depicts the proposed sampling procedure to be used at Mt. Elbert Pumped Storage Plant on the lower lake of Twin Lakes near Leadville, Colorado. The devised netting system will allow collection of entrained fish during both pumping and generating phases. LaBounty and Roline's apparatus (Figure 11) is unique because it is being incorporated into the intake-discharge area of the station during plant construction. Initial operation of the first of two units is planned for June or July of 1981 (LaBounty and Roline 1980). Turbine mortality studies undertaken by Layzer in 1975 at the Northfield Mountain Pumped Storage Plant in Massachusetts utilized orally implanted sonic transmitters for monitoring purposes (Layzer 1976).

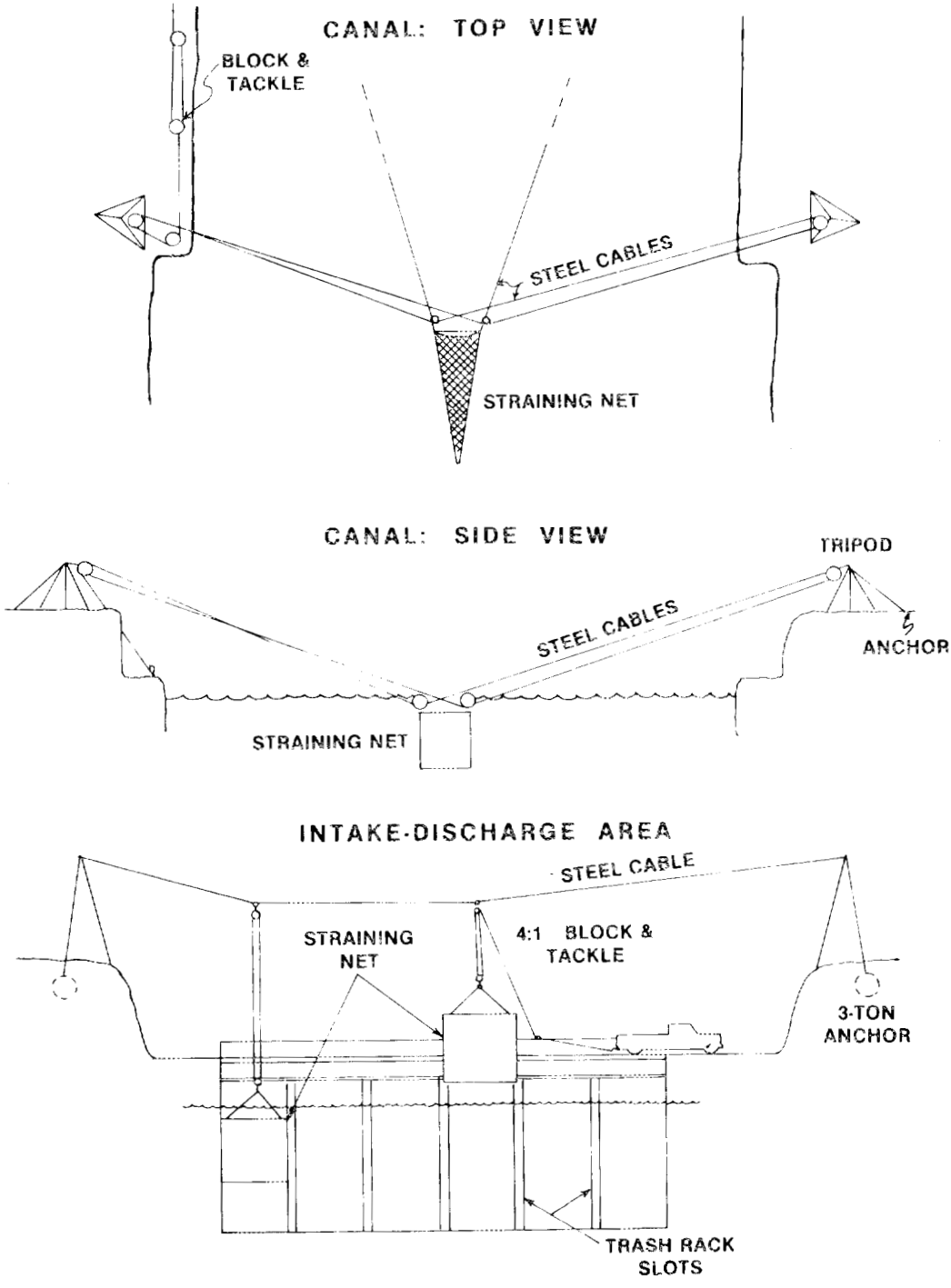

Figure 10. Sampling apparatus for fish mortality studies at the Banks Lake, Washington, pumped-storage site. Source: Stober et al. 1977.

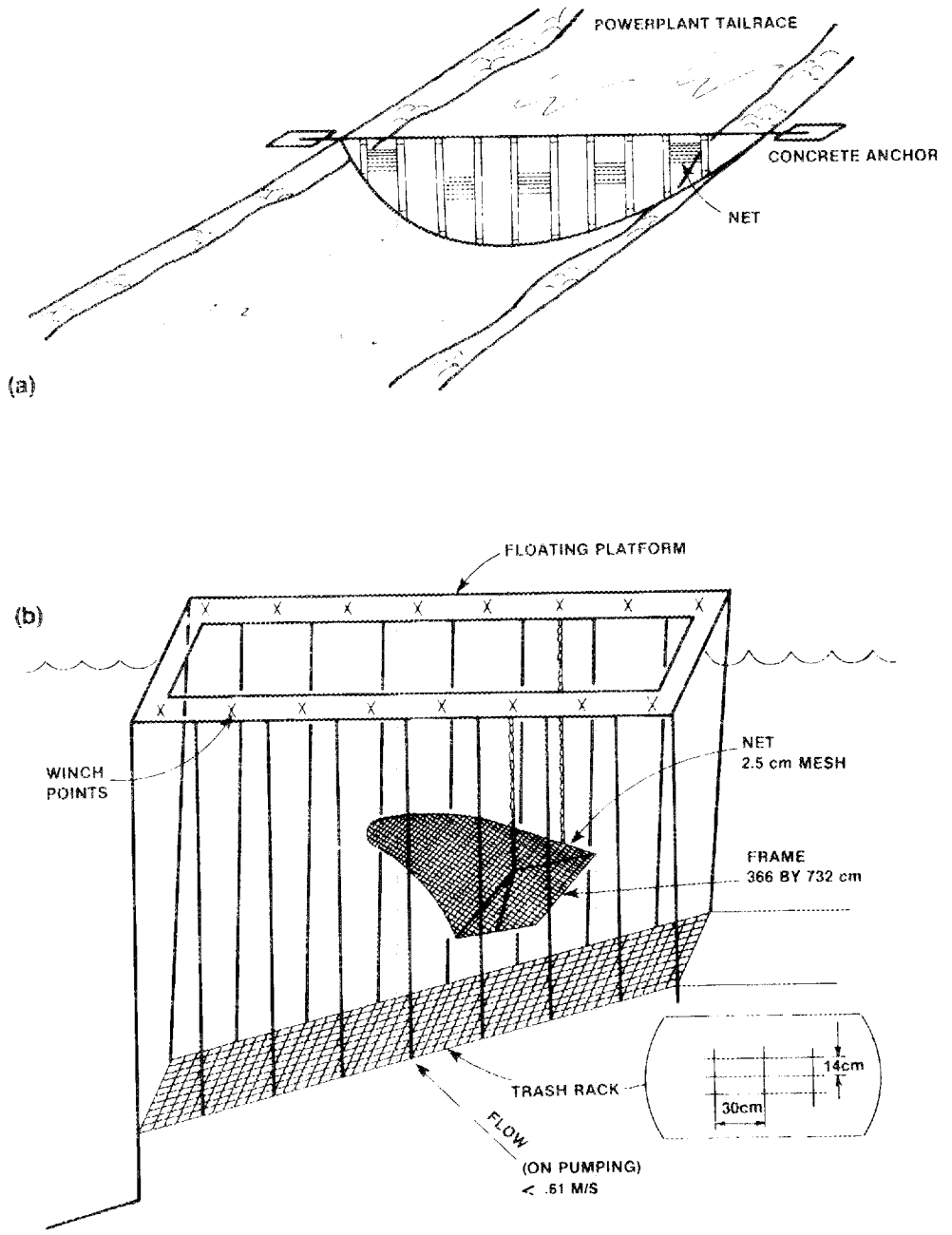

Figure 11. Proposed sampling apparatus for fish mortality studies in the (a) tailrace and (b) forebay of the Mt. Elbert Pumped Storage Powerplant. Source: LaBounty and Roline 1980.

The subject of pressure effects on entrained fish species has been well documented in the literature for steam-electric and conventional hydroelectric power plants (Marcy et al. 1978, Cramer and Oligher 1964, Brawn 1962). Although little work has been described dealing with pressure effects at pumped-storage facilities, two such examples have been cited. In 1965, Foye and Scott reported their investigation at the proposed Pleasant Ridge pumping system in Maine. Water in the Pleasant Ridge storage project lies at an elevation 211.2 m higher than the pumping site at Wyman Lake, resulting in a pressure at the pumping site of about 0.088 kg/m^2. To obtain survival data, a pressure chamber was designed to simulate conditions of pressure change during the pumping cycle. Test fish included chain pickerel, yellow perch, fallfish, common shiners, lake trout, and lake Atlantic salmon. Pressure was decreased at a constant rate throughout the 10-min test period from 2067.4 kPa (300 psi) to atmospheric pressure [101.3 kPa (14.7 psi)]. After pressure exposure, fish were returned to holding troughs for observation. Dead fish were examined for pressure effects immediately, whereas surviving fish were held for 7 d to assess effects producing delayed mortality.

Beck et al. (1975) attempted to determine the effects on striped bass of hydrostatic pressure that were expected to exist in the proposed pump-storage facility at Cornwall, New York. Although specific pressure regimes experienced in the pumping and generating cycles were to have been determined by final plant design, preliminary studies on Hudson River biota led to the design of a pressure chamber capable of reproducing exposure patterns of 13.8 to 4823.8 kPa (2.0 to 700 psi). The apparatus was modified to represent a more realistic simulation model as the study progressed and as more information on the pressure regimes became available. In the initial phase of the experiments, no pressure less than atmospheric was expected to be produced because the turbines would be submerged 15.2 m below the surface. However, it was later learned that some water would pass through a nearly instantaneous pressure drop in both pumping and generating phases. Thus, negative pressures would result, as shown in

Figures 12 and 13. The point at which negative pressure occurs is labeled "A" in the pumping mode (Figure 12) and "B" in the generating mode (Figure 13). According to the interpretation of Beck et al. (1975), a pressure gradient from subatmospheric to about 202,600 Pa (2 atmospheres of pressure) will occur 15.2 to 20.3 cm below the turbine blades. In both pumping and generating cycles, the changes in hydrostatic pressure are expected to occur almost instantaneously in any water sample studied. Considering the extreme pressure ranges with which they were dealing, the Cornwall team initially devised two pressure systems; one exposed organisms to pressures less than atmospheric, and the other exposed organisms to a maximum of 5512.9 kPa (800 psi) in less than 1 s.

3.3 Results and Conclusions of Mortality Studies

In Serchuk's 1974 and 1975 studies at the Ludington facility (Serchuk 1976), pumping mortality was estimated by using the data from five 1974 experiments and six 1975 experiments (Tables 8 and 9). Pumping mortality averaged 56.6% for the 1974 tests and 65.1% (67.7% with salmon) during the next year. Of the fish that died during passage, 37.2% exhibited physical damage in 1974 as compared with 61.5% in 1975. Because most damages involved lacerations or decapitations (73.5% in 1975), Serchuk concluded that mechanical contact and shearing forces were the causative factors. Size-selective mortality was also examined during the pumping cycle by using fish ranging from 267 to 331 mm in 1974 and 316 to 677 mm in 1975. If size selectivity did exist, the 1975 experiments should have shown a difference in length between the live and dead recaptures following turbine passage. Statistically, no significant difference was recorded in these tests, although a passage run conducted with only the larger fish resulted in the highest turbine mortality.

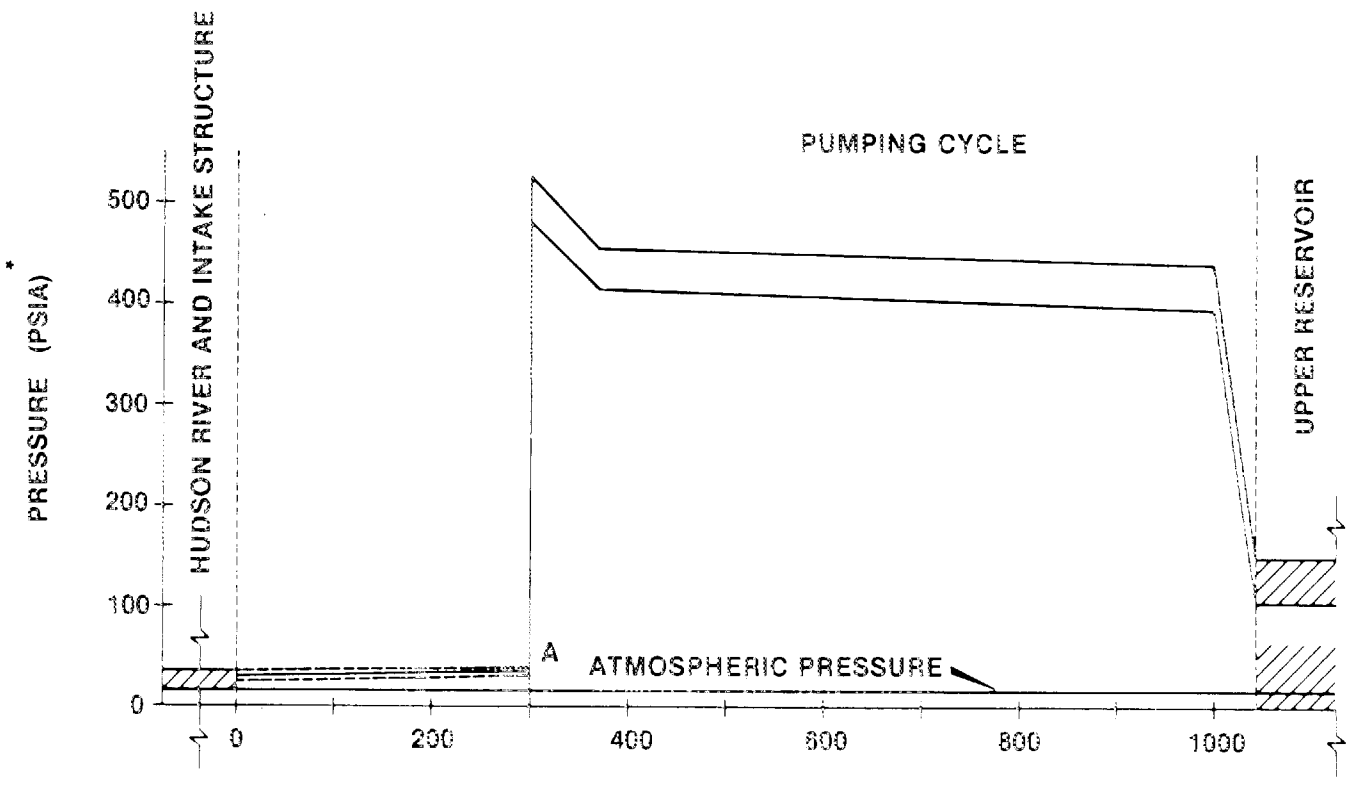

Figure 12. Schematic of pumping cycle pressure regime expected at the Cornwall pumped-storage facility at full power level. "A" is the point where negative pressures occur. Source: Beck et al. 1975.

* To convert pressure from psia to kPa, divide psia by 0.145113.

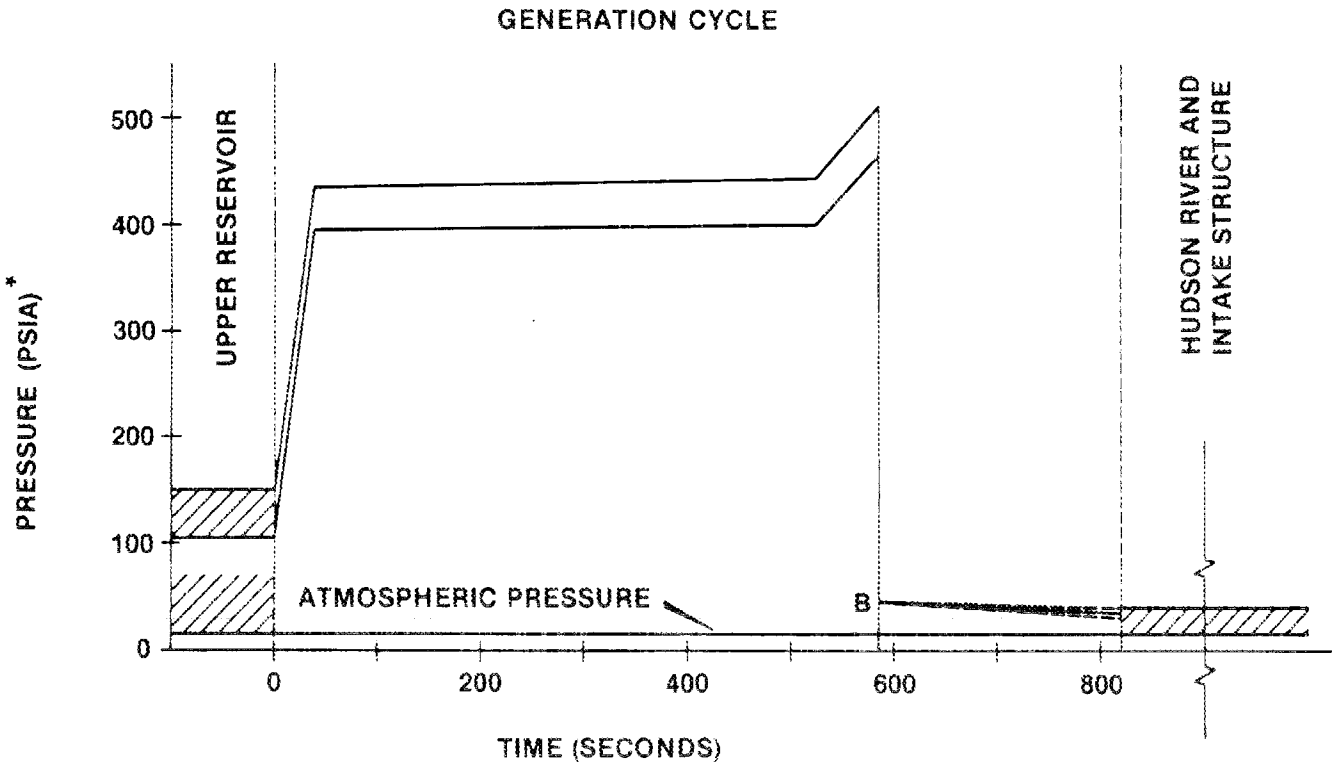

Figure 13. Schematic of generating cycle pressure regime expected at the Cornwall pumped-storage facility at full power level. "B" is the point where negative pressures occur. Source: Beck et al.

* To convert pressure from psia to kPa, divide psia by 0.145113.

Test date	Operating mode	Number of fish released	Recovered fish: Number alive	Recovered fish: Number dead	Number of floats-only recovered	Fish recovery (%)	Total % recovery fish and floats	Mortality rate[a]: M_1	Mortality rate[a]: M_2	Mortality rate[a]: M_3
28 Apr	Pumping	120 (A)[b]	4	--	--	2.5	2.5			
		24 (D)	--	--	--	--	--			
3 May	Pumping	10 (A)	3	1	--	40.0	40.0	25.0	25.0	70.0
19 May	Pumping	127 (D)	--	45	17	35.4	48.8	--	--	--
21 Jun	Pumping	95 (A)	11	22	35	34.7	71.6	66.7	83.8	88.4
12 Jul	Pumping	76 (A)	24	14	19	50.0	75.0	36.8	57.9	68.4
		25 (D)	--	13	2	52.0	60.0			
14 Aug	Generating	166 (A)	38	73	--	66.9	Mortality rate cannot be determined as in other tests since more than 1 fish per bag (5/bag)			
28 Aug	Generating	75 (A)	20	41	2	81.3	84.0	67.2	68.2	73.3
		15 (D)	--	8	3	53.3	73.3	--	--	--
6 Oct	Pumping	75 (A)	15	22	19	49.3	74.7	59.5	73.2	80.0
		15 (D)	--	3	6	30.0	90.0	--	--	--
20 Oct	Pumping	105 (A)	20	28	35	45.7	79.0	58.3	75.9	80.9
3 Nov	Pumping	94 (A)	17	27	42	46.8	91.5	61.4	80.2	81.9

[a] M_1 = Number of dead recaptures/total recaptured fish X 100.
M_2 = Number of dead recaptures plus recaptured floats/recaptured fish plus floats X 100.
M_3 = Number of dead recaptures plus recaptured floats plus unrecovered fish/total fish released into turbine X 100.

[b] (A) = Alive upon turbine release.
(D) = Dead upon turbine release.

Source: Serchuk 1976.

Table 9. Summary of 1975 fish passage experiments at the Ludington pumped-storage facility

Test date	Operating mode	Number of fish released[a]	Recovered fish: Number alive	Recovered fish: Number dead	Number of floats-only recovered	Fish recovery (%)	Total % recovery fish and floats	Mortality rate[b]: M_1	Mortality rate[b]: M_2	Mortality rate[b]: M_3
15 Jun	Pumping	51 (C)	32	6	1	94.1[c]	96.1	15.8		
		40 (A)	3	8	10	62.5[d]	87.5	72.7	85.7	67.6
		105 (D)	--	39	36	37.1	71.4			
20 Jul	Pumping	50 (C)	46	4	--	100.0	100.0	8.0		
		148 (A)	10	16	91	22.3[e]	83.8	61.5	91.5	58.2
		16 (D)	--	4	10	25.0	87.5			
8 Aug	Generating	50 (C)[f]	11	38	--	98.0	98.0	77.6		
		(C)[g]	46	3	--	98.0	98.0	6.1		
		133 (A)	19	61	21	61.7[h]	77.4	76.3	81.2	74.8
		22 (D)	--	16	2	72.7	81.8			(1.06)[i]
25 Aug	Generating	30 (C)	18	11	--	100.0[j]	100.0	37.9		
		79 (A)	11	40	24	64.6	94.9	78.4	85.3	65.2
		74 (D)	--	33	24	44.6	77.0			
21 Sep	Pumping	45 (C)	31	14	--	100.0	100.0	31.1		
		127 (A)	14	30	39	45.7[k]	76.4	68.2	83.1	53.8
		1 (D)	--	--	--	0.0	0.0			
4 Oct	Generating	40 (C)	35	5	--	100.0	100.0	12.5		
		129 (A)	48	37	37	65.9	94.6	43.5	60.7	35.4
		2 (D)	--	2	--	100.0	100.0			
17 Oct	Generating	40 (C)	35	5	--	100.0	100.0	12.5		
		114 (A)	29	43	20	63.2	80.7	59.7	68.5	53.9
		3 (D)	--	2	1	66.7	100.0			
19 Oct	Pumping	No controls used								
		49 (A)	2	19	25	42.9	93.9	90.5	95.7	--
		2 (D)	--	2	--	100.0	100.0			
2 Nov	Pumping	46 (C)	42	4	--	100.0	100.0	8.7		
		137 (A)	9	31	52	29.9[l]	67.8	77.5	90.2	75.4
		3 (D)	--	1	1	33.3	66.7			

Test date	Operating mode	Number of fish released[a]	Recovered fish		Number of floats-only recovered	Fish recovery (%)	Total % recovery fish and floats	Mortality rate[b]		
			Number alive	Number dead				M_1	M_2	M_3
9 Nov	Pumping	46 (C)	43	3	--	100.0	100.0	6.5		
		138 (A)	14	31	41	33.3[m]	63.0	68.9	83.7	66.7
		5 (D)	--	2	1	40.0	60.0			

[a](C) = Control fish.
(A) = Alive upon turbine release.
(D) = Dead upon turbine release.

[b]M_1 = Number of dead recaptures/total recaptures X 100.
M_2 = Number of dead recaptures and recaptured floats/total recaptures and recaptured floats.
M_3 = Adjusted M_1 (using control loss rate).

[c]Includes 10 fish, recovered late, but not used in the analysis.

[d]Includes 14 fish, recovered late, but not used in the analysis.

[e]Includes 7 fish, recovered late, but not used in the analysis.

[f]Excludes 4 fish, dead at release and subsequently recovered.

[g]Data based on fish, alive at field recapture, regardless of subsequent mortality.

[h]Includes 2 fish, recovered late, but not used in the analysis.

[i]Estimate derived by using control loss rate of 77.6.

[j]Includes 1 fish, recovered late, but not used in the analysis.

[k]Includes 14 fish, recovered late, but not used in the analysis.

[l]Includes 1 fish, recovered late, but not used in the analysis.

[m]Includes 1 fish, recovered late, but not used in the analysis.

Source: Serchuk 1976.

To assess turbine mortality during power generation, Serchuk performed two experiments in 1974 using yellow perch and chinook salmon and four tests in 1975 using rainbow trout. The resultant overall mortality in the 1974 experiments, which was computed by using both immediate and latent mortalities, was 67.2%. Physical damage was evident in only 7.3% of dead recaptures. Pooled mortality data on 1975 runs (Table 9) resulted in a mean unadjusted rate of 62.8% and an adjusted rate (incorporating handling losses of control groups) of 40.7%. Serchuk felt the disparity in mortality rates might be explained by the increased summer stress induced by higher water temperature and prolonged handling. No discernible relationship could be established between mean fish length and mortality rate.

To further examine the size-mortality relationship, Serchuk repeated his runs in 1974, using various-sized pine and spruce boards as organismal units (Table 10). During the pumping mode, recovery and damage rate generally increased with board size. The smaller boards experienced minimal damage, whereas nearly 100% damage was reported in the larger (660-mm) boards. The same relationship between size and mortality existed during the generating cycle. However, as in the fish passage trials, a marked difference in percentage of damage is noted for the two cycles, with damage being considerably higher in the pumping phase (Figure 14).

In discussing his findings in the Ludington turbine-passage studies, Serchuk attributed the disparity between pumping and generating mortalities to the difference in wicket gate settings; the gates were 82% open during generation as opposed to 65% open during pumping. This larger opening would permit the safe passage of fish over a wide size range and would, therefore, permit a higher survival rate during the generating mode. Results of the board-passage experiments agreed with results obtained from fish test runs, further substantiating the role of turbine design and operation, as described by Bell et al. (1967). Although damage was shown to be directly proportional to size in the board runs, no comparable statement could be supported by the results of the fish runs. Serchuk concluded that

Test # and date, operational mode	Board size (cm)	Number of boards introduced	Number of boards recovered	Recovery (%)	Recovered boards: Number intact, no damage	Recovered boards: Number hit or cracked	% Damaged of the recovered boards
#3 - 10 May 74, pumping	15.2	50	15	30.0	13	2	18.3
	30.5	49	19	38.8	8	11	57.9
#5 - 21 June 74, pumping	45.7	44	27	61.4	7	20	74.1
	61.0	43	31	72.1	5	26	83.9
#8 - 12 July 74, pumping	15.2	49	27	55.1	26	1	3.7
	30.5	49	29	59.2	23	6	20.7
#10 - 14 Aug 74, generating	15.2	51	45	88.2	44	1	2.2
	30.5	50	46	92.0	34	12	26.1
	45.7	53	45	84.9	24	21	46.7
	61.0	24	22	91.6	10	12	54.5
#12 - 28 Aug 74, generating	15.2	49	41	83.7	39	2	4.9
	30.5	46	38	82.6	31	7	18.4
	45.7	48	42	87.5	25	17	40.5
	61.0	47	41	87.2	18	23	56.1
#13 - 3 Oct 74, pumping	15.2	9	5	55.6	5	0	0.0
	30.5	34	24	70.6	16	8	33.3
	45.7	5	1	20.0	0	1	100.0
#14 - 6 Oct 74, pumping	15.2	31	16	51.6	16	0	0.0
	20.3	47	26	55.3	22	4	15.4
	30.5	12	6	50.0	5	1	16.7
	45.7	43	36	83.7	16	20	55.6
	61.0	46	41	89.1	5	36	87.8

Table 10 (continued)

Test # and date, operational mode	Board size (cm)	Number of boards introduced	Number of boards recovered	Recovery (%)	Recovered boards: Number intact, no damage	Recovered boards: Number hit or cracked	% Damaged of the recovered boards
#17 - 20 Oct 74, pumping	15.2	36	19	52.8	18	1	5.3
	20.3	49	27	55.1	24	3	11.1
	30.5	49	24	50.0	15	9	37.5
	45.7	49	44	90.0	17	27	61.4
	61.0	47	44	93.6	6	38	86.4
#19 - 14 Nov 74,	15.2	49	21	42.9	21	0	0.0
	20.3	49	20	40.8	15	5	25.0
	30.5	49	24	50.0	18	6	25.0
	45.7	49	32	65.3	9	23	71.9
	61.0	49	43	87.8	3	40	93.0
	66.0	48	35	72.9	1	34	97.1
Totals							
Pumping	15.2	224	103	46.0	99	4	3.9
	20.3	145	73	50.3	61	12	16.4
	30.5	242	126	52.1	85	41	32.5
	45.7	190	140	73.7	49	91	65.0
	61.0	185	159	85.9	19	140	88.1
	66.0	48	35	72.9	1	34	97.1
		1034	636	61.5	314	322	
Generating	15.2	100	86	86.0	83	3	3.5
	30.5	96	84	87.5	65	19	22.6
	45.7	101	87	86.1	49	38	43.7
	61.0	71	63	88.7	28	35	55.6
		368	320	87.0	225	95	

Source: Serchuk 1976.

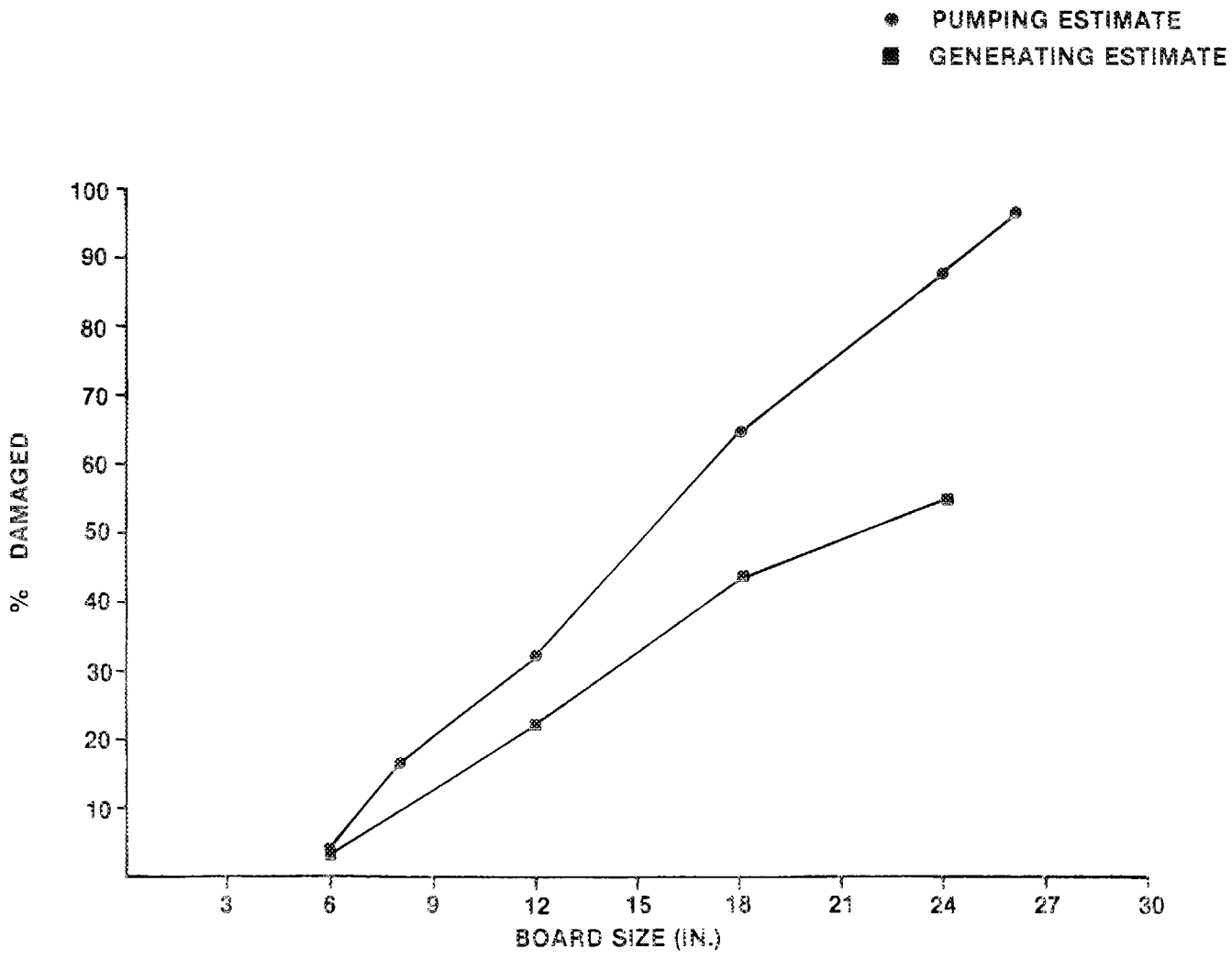

Figure 14. Comparison of damage between pumping and generating phases in the 1974 board passage experiments at the Ludington pumped-storage facility.
Source: Serchuk 1976.

the discrepancy between the fish and board results could be explained by other than mechanical factors. The recapture of fish with missing pieces suggested the presence of shearing action, whereas metal pitting of the turbine blades suggested cavitation. In addition to mechanical injuries such as slashes, cuts, or abrasions (43.4% in pumping runs, 53.1% in generating runs), weekly observations of dead fish in the reservoir showed many decapitated fish and fish with broken gill arches, suggesting shearing action. Directly comparing fish mortality data with board results of a similar size (305 mm) revealed that both pumping and generating fish mortalities were much higher than the damage rates of the board. This, again, would imply that factors other than mechanical effects are influencing fish mortality.

Liston et al. (1980) ran four mortality tests at Ludington during the generating cycle using rainbow trout. Combining all generating data of the 1978 experiments, a mean adjusted mortality rate (based on control loss rate) of 35.7% was computed (Table 11). Using a one-week holding period, Liston reported a delayed mortality of 66.3% compared to the 70% delayed mortality after a 3-d holding period reported by Serchuk (1976). Liston's experimental results in his 1978 investigations also indicated that turbine mortality did indeed exist at the Ludington site. He concluded that, because of the similarity in procedure to the 1974 and 1975 tests, the lower mortality rate (35.7%) observed in 1978 could be related to lower water temperatures (Serchuk's mean adjusted mortality rate of 51.5% involved several August samplings).

Heisy and Mathur (1980), reported pumping phase mortality of carp larvae to be 17% in their investigations at the Muddy Run Pumped Storage Facility. In their runs with adult channel catfish, brown bullhead, white crappie, carp, and smallmouth bass during the pumping cycle, a 75% mortality resulted. However, it was concluded that the mortality estimate might have been influenced by the method of introducing fish into the intake area and, therefore, should not be considered an accurate assessment.

Table 11. Summary of fish passage experiments at the Ludington Pumped Storage Power Plant conducted in 1978

Test date	Operating mode	Number of fish released[a]	Recovered fish		Number of latent deaths	Number of floats-only recovered	Total % recovery fish and floats	Mortality rates[b]			
			Number alive	Number dead				M_1	M_2	M_3	M_4
26 Sept.	Generating	40 (C)	40	0	--	--	100.0	--	--	--	--
		68 (R)	26	2	--	6	50.0	7.1	23.5	--	--
10 Oct.	Generating	20 (C)	20	0	0	--	100.0	0	0	0	--
		124 (R)	81	5	19	21	86.0	5.8	24.3	27.9	27.9
17 Oct.	Generating	20 (C)	20	0	1	--	100.0	0	0	0	--
		111 (R)	50	13	12	21	76.0	20.6	40.5	39.7	37.7
10 Nov.	Generating	20 (C)	20	0	0	--	100.0	0	0	0	--
		132 (R)	71	13	30	32	87.8	14.3	38.8	50.0	50.0
Total	All generating	100 (C)	100	0	1	--	100.0	0	0	1.0	--
		435 (R)	228	33	61	80	78.4	12.6	33.1	36.1	35.7

[a](C) = Control fish.
(R) = Fish released through turbines.

[b]M_1 = Number of dead recaptures/total number fish recaptured X 100.
M_2 = Number of dead recaptures and recaptured floats/total recaptures and recaptured floats X 100.
M_3 = Number of dead recaptures and number latent deaths/total number of fish recaptured X 100.
M_4 = Adjusted M_3 (based on control loss rate).

Source: Liston et al. 1980.

Although natural mortalities have been observed at the Muddy Run Pumped Storage Project since its operation in 1966, no indication of any power-plant-related causes were evidenced (Robbins and Mathur 1976). Occasionally, live channel catfish and white crappie were caught that had missing caudal fins and other injuries. Sampling procedures hindered several attempts at assessing mortality estimates, and the 75% pumping mortality described by Heisy and Mathur (1980) is questioned by the investigators because the estimate was influenced by mortalities associated with the way in which fish were introduced into the plant intake area.

In the investigation of pressure effects by Foye and Scott (1965) at the Pleasant Ridge pumped-storage facility (Table 12), test fish grouped by species exhibited extreme and erratic violent swimming activity for the first 3 or 4 s after exposure to a pressure of 2067 kPa (300 psi). Salmon, lake trout, and larger pickerel reacted less violently to the pressure than did yellow perch, fallfish, and common shiners. Between pressures of 2067 kPa (300) and 689 kPa (100 psi), many fish appeared to have slightly arched bodies and inwardly depressed bellies. Most fish settled to the bottom of the tank until pressure was reduced to atmospheric. During the 7-d observation time after exposure, no mortality occurred in the salmon, lake trout, or fallfish. After 24 h, the yellow perch test groups recorded mortalities of 20 and 40%. This value rose to 60% at the end of 7 d. Of the two pickerel groups, one group exhibited no mortality, and the other exhibited 20% mortality. After 7 d, mortality reached 20 and 60% respectively. The highest mortality occurred within the common shiners, with the two groups ranging from 26 to 46% mortality in the first 24-h period. A week later, this percentage increased to 42 and 80% respectively. Although mortalities were evidenced in all species, and even reached as high as 80% in common shiners, only yellow perch exhibited visible damage, with four having ruptured air bladders and three having hemorrhagic kidneys. Although the investigators concluded that the pressures encountered in the pumping operation will probably not completely eliminate any species, this evidence suggested

Table 12. Mortality data of Pleasant Ridge pressure experiments

Number by species	% Mortality, 24 h	% Mortality, 7 d	Visible physical damage
Salmon			
Group I (35)	0%	0%	
Group II (35)	0%	0%	
Lake trout			
Group I (25)	0%	0%	
Group II (25)	0%	0%	
Fallfish			
Group I (17)	0%	0%	
Group II (17)	0%	0%	
Yellow perch			
Group I (5)	20%	60%	4 ruptured air bladders
Group II (5)	40%	60%	3 hemorrhagic kidneys
Chain pickerel			
Group I (5)	0%	20%	
Group II (5)	20%	60%	
Common shiner			
Group I (16)	26%	42%	
Group II (16)	46%	80%	

Source: Foye and Scott 1965.

that the pumping operation may influence the fish population of Pleasant Ridge.

Using various life-cycle stages of striped bass and three sophisticated pressure chambers, Beck et al. (1975) hoped to present some evidence of pressure regime effects encountered during both pumping and generating cycles. For most runs, the survival times differed only slightly, if at all, between experimental and control groups. For the group observed immediately after exposure, only the 4 d, 10 h larvae showed a significant difference in survival time in pressures less than atmospheric (Table 13). The only other significant difference occurred 1 d after exposure for the 7 d, 12 h larvae.

After intensive testing for hydrostatic pressure effects, Beck et al. (1975) proposed that additional research be conducted to consider the role of other factors influencing survival. Of particular concern is the relationship between the life cycle stage of the entrained organism and its acclimation pressure.

3.4 Analysis of Studies Cited

While a comparison of results of the turbine mortality studies undertaken at various pumped-storage sites would be desirable, this would not be completely practical because each site is unique. Such parameters as the physical design and operation of the facility, the species composition of the reservoir fisheries, and reservoir hydrology vary from site to site and make even general comparisons difficult. Consideration must be given to the fluctuating water levels during plant operation as well as the turbidity, temperature, and velocity of water passing through the power station. The relationship of plant operation to the life cycle stage of the resident species also influences sampling data. Snyder (1975) reported that 6.5 times as many larvae were pumped from Conowingo Pond

Table 13. Results of exposure of striped bass eggs and larvae to pressure less than atmospheric in the laboratory

Stage	Exposure (psi)	Exposure time	Immediate[a] C % al	Immediate[a] E % al	Immediate[a] Sig.	1 d[a] C % al	1 d[a] E % al	1 d[a] Sig.[b]	3 d[a] C % al	3 d[a] E % al	3 d[a] Sig.
Eggs											
4 h	5.7	15 s	96.2	97.6	N.S.	92.0	82.4				
25 h	5.9	10 s	92.8	96.0	N.S.						
Larvae											
4 d, 8 h	10.1	10 s	100.0	100.0	N.S.						
4 d, 10 h	5.6	5 s	100.0	80.0	*	67.2	35.2				
5 d	5.6	5 s	100.0	100.0	N.S.	44.8	48.0	N.S.			
5 d, 7 h	6.7	5 s	100.0	100.0	N.S.						
7 d, 12 h	6.1	3 s	99.2	99.2	N.S.	73.6	53.6	*	54.4	32.8	
8 d, 12 h	6.2	5 s	99.2	100.0	N.S.	76.0	77.6	N.S.			
17 d, 16 h	8.9	10 s	98.4	100.0	N.S.	88.0	94.0	N.S.			

Source: Beck et al., 1975.

[a]C = Control groups.
E = Experimental groups.
% al = Survival percentage.

Sig. N.S. = Not significant.
* = Experimentally significant, as determined by contingency table analysis ($\alpha = 0.05$).

[b]Where blank exists, data were not provided in original paper.

(Muddy Run Pumped Storage Facility) into the upper reservoir than were returned during generation. Likewise, Prince and Mengel (1980) recorded that 6 times as many entrained fish during the pumping phase of the Jocassee plant than were found during generation. Snyder (1975) suggested that the Muddy Run pumping schedule be altered to reduce entrainment. By limiting pumping to daylight hours (mostly weekends, when excess electricity is available), fewer young fish would be entrained because the young of many species are believed to congregate near the bottom or in protected areas during daylight hours. Snyder's concern for species vulnerability during spawning seasons is shared by Anderson (1977), who reported that salmonids are most susceptible to entrainment by a pumped-storage system during spawning runs. He attributed this susceptibility to the attraction of these anadromous species to eddies and currents that emanate from the power plant.

The sampling procedure itself certainly influences the test results. By using a modification of Johnson's (1970) tagging methodology, Serchuk (1976) achieved relative success in tagging and recovering adequate numbers of fish for statistical data analysis. However, he does show some concern for the effect of both the float attachment and the net-bag enclosure on the orientation and survival of fish undergoing pump-turbine passage. Of particular concern are the possible adverse effects of bag confinement, which may limit fish movement. The final results were also affected by location and number of recapture crews because only recaptured fish were used to compute mortality rates. Also contributing to the overall results is the percentage of fish successfully released to the turbines. Serchuk (1976) found that turbine entry was seldom complete; several specimens were identified that had been caught in the trash slots or recaptured many miles from the plant because they failed to enter the turbine.

Individual site results were also influenced by species composition and the time of the year in which collections were made. Serchuk (1976) reported a 1974 generating mortality of 67.2%, which was considerably higher than the 40.7% observed in 1975. He explained

this discrepancy by the fact that the 1974 studies included yellow perch, which are physoclistous and more prone to pressure-related injury than the physostomous brook trout (Beck et al. 1975). Although the mean adjusted mortality values were adjusted for "handling mortalities," the handling effects were probably more detrimental during warm weather sampling and could have masked other effects.

For all pumped-storage sites, an assessment of fish turbine mortality is meaningful only when integrated with other population and ecological parameters that together contribute to an overall understanding of the entire area. A more accurate prediction of total lake and reservoir populations are needed before mortality estimates can be of use. Serchuk (1976) suggests that, although population figures are definitely needed, the total impact must also be related to the stress of the mortality on the surviving population. Although many compensatory mechanisms are in effect to deal with population fluctuations, a clear picture of species resiliency in pumped-storage reservoirs is lacking.

4.0 SUMMARY AND CONCLUSIONS

The turbine-related fish mortality investigations that are associated with conventional hydroelectric installations consisted of model and prototype studies. The model studies were performed primarily on models of Francis runners and successfully demonstrated the effect of head, runner speed, tailwater elevation, and blade/gate clearance on fish mortality. Although model studies provided insight into how fish mortality was influenced by differences in turbine design and operation, it did not appear feasible to extrapolate the study results to prototype studies.

Prototype studies were performed primarily at high-head installations equipped with Francis runners and at low-head plants where Kaplan runners were installed. The results of these studies indicated that the nature and extent of fish mortality were related to the engineering design characteristics of the turbine. A Francis runner has a larger number of blades; thus, the degree of clearance (blade/blade and blade/gate) strongly influences the magnitude and type of injury. A Kaplan runner has fewer blades to provide higher speed and output for a given head and runner size. However, this design results in greater blade loading and, thus, more critical cavitation characteristics (Mayo 1979). Hydraulic head and sigma (see p. 16) influenced the nature and extent of injury of fish tested on Kaplan prototypes.

The overall conclusion of different types of studies undertaken using both Francis and Kaplan runners is that highest survival occurs during times when the turbine is operating at maximum efficiency. Power loadings should be properly adjusted to achieve highest efficiency, particularly during times of downstream fish migration. Studies such as those currently being conducted at some of the mid-Columbia River dams may detect the peak migration times with sonar devices. This type of information can be passed to the powerhouse operators so that the turbine units are operated at high efficiencies.

Under normal operating conditions, losses from turbines are expected to range between 10 and 25%, but may be decreased if loads are reduced to around 70% of the turbine's maximum rated capacity.

It is important to put turbine-related fish mortality at conventional hydroelectric facilities into perspective. Turbine-related mortality is only one of many causes of mortality to downstream migrating juveniles as a result of hydropower development; other factors affecting survival are spillways, downstream passage facilities, predation, and delay in migration. The Snake and Columbia River systems provide examples where impacts to downstream migrants may be particularly severe. Juvenile stages may encounter as many as eight to ten dams in their passage to the sea. Collective losses have been examined by Raymond (1979) and Bell et al. (1976). Ongoing research at the public utility dams on the mid-Columbia River may provide some insight into passage through a series of hydraulic structures. As more powerhouses and storage projects are completed, proportionately more water will be passed through generating units, making turbine-related mortality an increasing concern. Mitigation of this impact appears to lie with the development and refinement of fish passage and transportation systems and with efficient operation of the turbines.

There is very little research described in the literature on the effects of turbine passage on fish at pumped-storage hydroelectric facilities. Personal communication with investigators currently involved in such work emphasizes the difficulty in designing sampling techniques applicable to the uniqueness of pumped-storage operation. This has been the major impediment to in-depth investigations. However, ongoing research at several pumped-storage installations has shown that fish turbine mortality does indeed occur during both pumping and generating cycles. The fish mortality observed during the pumping phase was always considerably higher than that recorded during the generating mode. A possible explanation for this disparity is the wider wicket gate opening during the generating cycle, permitting safer passage. In addition, the majority of deaths were classified as

delayed because mortality was recorded several days after passage occurred. Duplicate passage experiments, substituting spruce and pine boards for the fish, also resulted in a higher damage rate during the pumping phase. Additionally, a size-damage relationship was observed, with smaller boards exhibiting minimal damage as compared with nearly 100% damage in larger board samples. Although this was not demonstrated in the fish runs, a passage run using only larger fish resulted in a considerably higher mortality rate. Comparing percentages of damaged specimens in fish and board experiments, both generating and pumping fish mortalities were much higher than the damage rates for boards. This could be explained by the influence on fish mortality of factors other than mechanical. Little has been done at pumped-storage sites to examine the existence of pressure effects. Preliminary investigation has shown both immediate and delayed pressure-related mortalities occurring during simulated pumping conditions, with ruptured air bladders occurring in some specimens.

The limited work done on turbine-related mortality in pumped-storage operations precludes it from detailed comparison with studies conducted at conventional hydroelectric plants. However, both mechanical and pressure-related factors appear to be important in the nature and extent of fish mortality at both types of hydroelectric facilities. The improvement of recovery methods for fish tested in pumped-storage operations may permit the extent and causes of turbine-related mortality to be better delineated.

The substantive findings of this document and how they relate to the renewed interest in developing small-scale hydropower projects can be briefly summarized as follows:

1. Turbine passage in both reversible and irreversible hydroelectric facilities can and will kill fish.

2. The extent of fish mortality may be decreased by turbine design considerations.

3. The extent of fish mortality may be decreased by certain operating conditions.

4. Although turbine design features and operating conditions are specified by studies conducted to date, site-specific concerns should still be evaluated.

5. The relationship of studies conducted to date to the newer turbine designs, which are currently being installed in small-scale hydropower operations, is unclear; more data need to be obtained on more modern small-scale prototypes.

REFERENCES

Allis-Chalmers Corporation. Undated. Standard Definitions and Nomenclature; Hydraulic Turbines and Pump/Turbines. Hydro-Turbine Division, York, Pennsylvania.

Anderson, R. C. 1977. Fish movements near the Ludington Pumped Storage Facility and comparisons of shoreline fish collections with reservoir collections. pp. 21-22. IN Ludington Workshop on Environmental Effects of Pumped Storage Power Facilities, Summary of Presentations. Michigan State University, East Lansing, Michigan.

Andrew, F. J., and G. H. Geen. 1958. Sockeye and pink salmon investigations at the Seton Creek hydroelectric installation. Progress Report. International Pacific Salmon Fisheries Commission, New Westminister, B.C.

Beck, A. P., G. V. Paje, and W. T. Waller. 1975. A laboratory study on the effects of the exposure of some entrainable Hudson River biota to hydrostatic pressure regimes calculated for the proposed Cornwall Pumped Storage Plant. IN S. B. Saila (ed.), Fisheries and Energy Production: A Symposium. Lexington Books, Lexington, Massachusetts.

Bell, M. C. 1973. Fisheries Handbook of Engineering Requirements and Biological Criteria. Fisheries Research Engineering Program, North Pacific Division, Portland, Oregon.

Bell, M. C. 1979. Study of turbine operations under peaking and high river flow conditions to obtain maximum fish passage and survival and updated 1967 May Compendium. pp. 323-358. IN Fifth Progress Report on Fisheries Research Engineering Program, 1973-1978. North Pacific Division, U.S. Army Corps of Engineers, Portland, Oregon.

Bell, M. C. 1980. Appendix B: Relationship between turbine operating efficiency and fish passage efficiency at Rock Island Dam bulb turbine unit no. 5. IN F. W. Olson and V. W. Kaczynski. Survival of Downstream Migrant Coho Salmon and Steelhead Trout through Bulb Turbines. Report prepared for Public Utility District No. 1 of Chelan County, Wenatchee, Washington. 45 pp. plus appendices. pp. B-1 to B-6.

Bell, M. C., A. C. DeLacy, and G. J. Paulik. 1967. A compendium on the success of passage of small fish through turbines. Report submitted to U.S. Army Corps of Engineers, North Pacific Division, Portland, Oregon.

Bell, M. C., Z. E. Parkhurst, R. G. Porter, and M. Stevens. 1976. Effects of peaking power on the survival of juvenile fish at the lower Columbia River. Report submitted to U.S. Army Corps of Engineers, North Pacific Division, Portland, Oregon.

Brawn, V. M. 1962. Physical properties and hydrostatic function of the swimbladder of herring (Clupea harengus L.). J. Fish. Res. Board Can. 19(4):635-656.

Clausen, C. K. 1934. Tests to determine the survival of salmon fingerlings to changes of water pressure and velocity approximating those of passage thru the reaction turbines of moderate head water power plants. University of Washington Hydraulics Laboratory, Seattle, Washington.

Clugston, J. P. (ed.). 1980. Proceedings of the Clemson Workshop on Environmental Impacts of Pumped Storage Hydroelectric Operations. FWS/OBS-80/28. U.S. Department of the Interior, Fish and Wildlife Service, Southeast Reservoir Investigations, Clemson, South Carolina.

Cramer, F. K. 1960. Fish passage through turbines: Model turbine experiments. Progress Report No. 1. U.S. Army Corps of Engineers, Walla Walla District, Walla Walla, Washington.

Cramer, F. K., and I. J. Donaldson. 1964. Evolution of recovery nets used in tests on fish passage through hydraulic turbines. Prog. Fish Cult. 26:36-41.

Cramer, F. K., and R. C. Oligher. 1960. Fish passage through turbines: Tests at Cushman No. 2 hydroelectric plant. Progress Report No. 2, U.S. Army Corps of Engineers, Walla Walla District, Walla Walla, Washington.

Cramer, F. K., and R. C. Oligher. 1961a. Fish passage through turbines: Further model turbine experiments - Francis runners. Progress Report No. 3, U.S. Army Corps of Engineers, Walla Walla District, Walla Walla, Washington.

Cramer, F. K., and R. C. Oligher. 1961b. Fish passage through turbines: Further tests at Cushman No. 2 hydroelectric plant. Progress Report No. 4, U.S. Army Corps of Engineers, Walla Walla District, Walla Walla, Washington.

Cramer, F. K., and R. C. Oligher. 1964. Passing fish through hydraulic turbines. Trans. Am. Fish. Soc. 93:243-250.

Davidson, F. A. 1965. The survival of downstream migrant salmon at the power dams and in their reservoirs on the Columbia River. Public Utility District of Grant County, Ephrata, Washington.

Davis, C. V. 1952. Handbook of Applied Hydraulics, 2nd ed. McGraw Hill Book Co., Inc., New York.

Department of Fisheries, Canada. 1958. The fisheries problems associated with the power development of the Puntledge River, Vancouver Island, B.C. Dept. Fisheries Canada, Vancouver, B.C.

Department of Fisheries and Wildlife, Michigan State University. 1977. Ludington Workshop on Environmental Effects of Pumped Storage Power Facilities, Summary of Presentations. Michigan State University, East Lansing, Michigan.

Ebel, W. J. 1969. Supersaturation of nitrogen in the Columbia River and its effect on salmon and steelhead trout. Fish. Bull. 68(1):1-11.

Foye, R. E., and M. Scott. 1965. Effects of pressure on survival of six species of fish. Trans. Am. Fish. Soc. 94:88-91.

Gerkowski, R. F., and J. J. Dellas. 1978. Generation challenge - Ludington pumped storage. J. Power Div., Proc. A.S.C.E., 104 (801):99-113.

Hamilton, J. A. R., and F. J. Andrew. 1954a. An investigation of the effect of Baker Dam on downstream-migrant salmon. Bull. IV. International Pacific Salmon Fisheries Commission, New Westminster, B.C.

Hamilton, J. A. R., and F. J. Andrew. 1954b. A study of mortality rates of sockeye salmon fingerlings in a turbine at Ruskin Dam. Unpublished report. International Pacific Salmon Fisheries Commission, New Westminster, B.C. (cited in Lucas 1962).

Hauck, F. R., and Q. A. Edson. 1976. Pumped storage: Its significance as an energy source and some biological ramifications. Trans. Am. Fish. Soc. 105:158-164.

Heisy, P. G., and D. Mathur. 1980. Summary of ecological studies of fishes in Muddy Run Pumped Storage Pond, Pennsylvania. pp. 80-94. IN J. P. Clugston (ed.), Proceedings of the Clemson Workshop on Environmental Impacts of Pumped Storage Hydroelectric Operations. FWS/OBW-80/28. U.S. Fish and Wildlife Service, Clemson, South Carolina.

Hildebrand, S. G. 1979. Potential environmental impacts of hydroelectric development: An overview. pp. 322-392. IN Hydropower: A National Energy Resource. 1979 Engineering Foundation Conference Proceedings, March 11-16, 1979, Easton, Maryland. Superintendent of Documents, U.S. Government Printing Office, Washington, DC.

Hildebrand, S. G. (ed.). 1980. Analysis of environmental issues related to small scale hydroelectric development. II: Design considerations for upstream fish passage facilities. ORNL/TM-7396. Oak Ridge National Laboratory, Oak Ridge, Tennessee.

Hildebrand, S. G. (ed.). 1980 (in press). Analysis of environmental issues related to small scale hydroelectric development. III: Water level fluctuation. ORNL/TM-7453. Oak Ridge National Laboratory, Oak Ridge, Tennessee.

Hildebrand, S. G., and G. B. Grimes. 1980 (in press). The Department of Energy environmental subprogram plan for small hydroelectric development. IN Proceedings Water Power '79, An International Symposium on the Potential of Small Scale Hydropower, Washington, D.C.

Holmes, H. B. 1952. Loss of salmon fingerlings in passing Bonneville Dam as determined by marking experiments. Unpublished report. U.S. Fish and Wildlife Service (cited in Davidson 1965 and in Lucas 1962).

Johnson, F. A. 1970. A device for fish recovery during turbine-passage mortality studies. Prog. Fish. Cult. 32:236-240.

Kuiper, E. 1965. Water Resources Development, Butterworths, Washington. 483 pp.

LaBounty, J. F., and R. A. Roline. 1980. Studies of the effects of operating the Mt. Elbert Pumped Storage Power Plants. IN J. P. Clugston (ed.), 1980. Proceedings of the Clemson Workshop on Environmental Impacts of Pumped Storage Hydroelectric Operations. FWS/OBS-80/28. U.S. Fish and Wildlife Service, Clemson, South Carolina.

Layzer, J. B. 1976. Observed fish mortality at the Northfield Mountain pumped-storage project tailrace, May 1975. Unpublished report. Massachusetts Cooperative Fishery Research Unit, University of Massachusetts, Amherst, Massachusetts.

Liston, C. R. 1979. Estimates of salmonid fish mortalities occurring at the Ludington pumped storage power facility during 1975-1978, and related studies. 1978 Annual Report, Ludington Project, Volume I, Number 2. Department of Fisheries and Wildlife, Michigan State University, East Lansing, Michigan.

Liston, C., D. Brazo, J. Bohr, R. Ligman, R. O'Neal and G. Peterson. 1980. Results of 1978 aquatic research at the Ludington Pumped Storage Power Plant on Lake Michigan including entrainment of fish and invertebrates, turbine mortalities, reservoir residence periods of salmonid fishes, netting and hydroacoustic surveys and water currents. 1978 Annual Report, Ludington Project, Volume I. Department of Fisheries and Wildlife, Michigan State University, Ludington Research Laboratory, East Lansing, Michigan.

Loar, J. M., L. L. Dye, R. R. Turner, and S. G. Hildebrand. 1980. Analysis of environmental issues related to small scale hydroelectric development. I: Dredging. ORNL/TM-7228. Oak Ridge National Laboratory, Oak Ridge, Tennessee.

Long, C. W. 1968a. Diel movement and vertical distribution of juvenile anadromous fish in turbine intakes. Fish. Bull. 66:599-609.

Long, C. W. 1968b. Research on fingerling mortality in Kaplan turbines-1968. Bureau of Commercial Fish., Biol. Lab., Seattle, Washington.

Long, C. W., and W. M. Marquette. 1967. Research on fingerling mortality in Kaplan turbines. Unpublished report. IN Proceedings of the Sixth Biennial Hydraulics Conference, University of Idaho, Moscow, Idaho.

Lucas, K. C. 1962. The mortality to fish passing through hydraulic turbines as related to cavitation and performance characteristics, pressure change, negative pressure and other factors. pp. 307-335. IN F. Numachi (ed.), Cavitation and Hydraulic Machinery. Proceedings of IAHR-Symposium, Sensai, Japan.

MacDonald, J. R., and R. A. Hyatt. 1973. Supersaturation of nitrogen in water during passage through hydroelectric turbines at Mactaquac Dam. J. Fish. Res. Board. Can. 30:1392-94.

MacEachern, N. 1959. Mortality tests - Tobique Narrows Dam. Canada Dept. of Fisheries, Fish Culture Development, Halifax, Nova Scotia. Unpublished report.

MacEachern, N. 1960. Mortality tests - Tobique Narrows Dam. Unpublished report. Canada Dept. of Fisheries, Fish Culture Development, Halifax, Nova Scotia.

Marcy, B. C., Jr., A. D. Beck, and R. E. Ulanowicz. 1978. Effects and impacts of physical stress on entrained organisms. IN J. R. Schubel and B. C. March, Jr. (eds.), Power Plant Entrainment: A Biological Assessment. Academic Press, New York, New York.

Mathur, D., and P. G. Heisy. In press. Monitoring of fish in pumped storage systems. IN C. H. Hocutt and J. R. Stauffer, Jr. (eds.), Biological Monitoring of Fish. Heath Book Company, Lexington, Massachusetts.

Mayo, H. A., Jr. 1979. Low-head hydroelectric unit fundamentals. pp. 291-321. IN Hydropower: A National Energy Resource. 1979 Engineering Foundation Conference Proceedings, March 11-16, 1979, Easton, Maryland. Superintendent of Documents, U.S. Government Printing Office, Washington, D.C.

Miracle, R. D., and J. A. Gardner, Jr. 1980. Review of the literature on the effects of pumped storage operations on ichthyofauna. pp. 40-53. IN J. P. Clugston (ed.), Proceedings of the Clemson Workshop on Environmental Impacts of Pumped Storage Hydroelectric Operations. FWS/OBS-80/28. U.S. Fish and Wildlife Service, Clemson, South Carolina.

Montreal Engineering Company, Limited. 1980. Downstream Atlantic salmon passage study. Report submitted to Canada Dept. of Fisheries and Oceans, Halifax, Nova Scotia, Canada. Montreal Engineering Company, Ltd., Halifax, Nova Scotia.

Muir, J. F. 1959. Passage of young fish through turbines. J. Power Division, Proc. A.S.C.E. 85(PO1):23-46.

Oligher, R. C., and I. J. Donaldson. 1966. Fish passage through turbines: Tests at Big Cliff hydroelectric plant. Progress Report No. 6, U.S. Army Corps of Engineers, Walla Walla District, Walla Walla, Washington.

Olson, F. W., and V. W. Kaczynski. 1980. Survival of downstream migrant coho salmon and steelhead trout through bulb turbines. Report prepared for Public Utility District No. 1 of Chelan County, Wenatchee, Washington. CH_2M Hill.

Oregon State Game Commission. Undated a. Leaburg and Walterville Turbine Studies, McKenzie River. Eugene Water and Electric Board. Unpublished report.

Oregon State Game Commission. Undated b. Stayton Turbine Tests, Pacific Power and Light Company. Unpublished report.

Oregon State Game Commission. 1960. A study of mortalities to downstream migrant salmonid fish passed through some Willamette Falls turbines. Unpublished report.

Oregon State Game Commission. 1961. A study of mortalities to downstream migrant salmonid fish passed through some Willamette Falls turbines. Unpublished report.

Prince, E. D., and L. J. Mengel. 1980. Entrainment of ichthyoplankton at Jocassee Pumped Storage Station. pp. 26-39. IN J. P. Clugston (ed.), Proceedings of the Clemson Workshop on Environmental Impacts of Pumped Storage Hydroelectric Operations. FWS/OBS-80/28. U.S. Fish and Wildlife Service, Clemson, South Carolina.

Raymond, H. L. 1979. Effects of dams and impoundment on migrations of juvenile chinook salmon and steelhead from the Snake River, 1966 to 1975. Trans. Am. Fish. Soc. 108(6):505-529.

Robbins, T. W., and D. Mathur. 1976. The Muddy Run pumped storage project: A case history. Trans. Am. Fish. Soc. 105(1):165-172.

Schoeneman, D. E., and C. O. Junge, Jr. 1954. Investigations of mortalities to downstream migrant salmon at two dams on the Elwha River. Research Bulletin No. 3, State of Washington, Dept. of Fisheries, Olympia, Washington.

Schoeneman, D. E., R. T. Pressey, and C. O. Junge, Jr. 1961. Mortalities of downstream migrant salmon at McNary Dam. Trans. Am. Fish. Soc. 90:58-72.

Schoumacher, R. 1976. Special session - biological considerations of pumped storage development - Introductory remarks. Trans. Am. Fish. Soc. 105(1):155-157.

Semple, J. R. 1979. Downstream migration facilities and turbine mortality evaluation, Atlantic salmon smolts at Malay Falls, Nova Scotia, Fisheries and Marine Service Manuscript Report No. 1541. Fisheries and Environment Canada, Halifax, Nova Scotia.

Serchuk, F. M. 1976. The effects of the Ludington Pumped Storage Power Project on fish passage through pump turbines and on fish behavior patterns. Ph.D. Thesis. Michigan State University, East Lansing, Michigan.

Smith, K. E. H. 1960. Mortality tests - Young salmon and gaspereau at Tusket River Power Dam, Yarmouth County, N.S. Canada Dept. of Fisheries, Halifax, Nova Scotia. Unpublished report.

Smith, K. E. H. 1961. Mortality tests, yearling gaspereau at Tusket River Power Dam, Yarmouth Co., N.S. Canada Dept. of Fisheries, Halifax, Nova Scotia. Unpublished Report. 61-9.

Snyder, D. E. 1975. Passage of fish eggs and young through a pumped storage generation station. J. Fish. Res. Board Can. 32:1259-1266.

Stober, Q. J., R. W. Tyler, J. A. Knutcen, D. Gaudit, C. E. Petrosky, and R. E. Nakatani. 1977. Operational effects of irrigation and pumped storage on the ecology of Banks Lake, Washington. University of Washington, Fisheries Research Institute, Seattle, Washington.

Tack, P. I., and C. R. Liston. 1973. A study of the effects of installing and operating a large pumped storage project on the shores of Lake Michigan near Ludington, Michigan. Eighth Quarterly Report to Consumers Power Co., Dept. Fish and Wildlife, Michigan State Univ, East Lansing, Michigan.

Tsvetkov, V. I., D. S. Pavlov, and V. K. Nezdoliy. 1971. Changes of hydrostatic pressure lethal to the young of some freshwater fish. J. Ichthyol. 12:307-318.

U.S. Army Corps of Engineers, Portland District. 1960. Effects of structures at main Columbia River dams on downstream migration of fingerlings. pp. 46-64. IN Progress Report on Fisheries Engineering Research Program. U.S. Army Corps of Engineers, North Pacific Division, Portland, Oregon.

U.S. Army Corps of Engineers, Walla Walla District. 1963. Fish passage through turbines: Tests at Shasta hydroelectric plant. Progress Report No. 5, Walla Walla, Washington.

U.S. Army Corps of Engineers, Walla Walla District. 1979. Fish passage through turbines - Tests at Big Cliff Dam. pp. 359-363. IN Fifth Progress Report on Fisheries Research Engineering Program, 1973-1978. North Pacific Division, U.S. Army Corps of Engineers, Portland, Oregon.

Von Gunten, G. H. 1961. Fish passage through hydraulic turbines. A.S.C.E. Hydraulics Div. 87(HY3):59-72.

APPENDIX A

GLOSSARY

A. GLOSSARY[a]

ADJUSTABLE-BLADE PROPELLER TURBINE - A turbine having a runner with a small number of blades, usually four to eight, to which the water is supplied in a whirling axial direction; the blades are angularly adjustable in the hub.

AXIAL FLOW - A flow of water essentially parallel to the main axis of a hydraulic turbine, pump, or water passage.

BULB - The streamlined watertight housing for a generator.

BULB UNIT - A unit consisting of a horizontal shaft turbine and close-coupled generator, which are both enclosed in a bulb located directly in the water passage.

CAVITATION - The formation of partial vacuums in a liquid by a swiftly moving solid body such as a propeller.

DRAFT TUBE - The section of the turbine water passage that extends from the discharge side of the turbine runner to the downstream extremity of the powerhouse structure.

FIXED-BLADE PROPELLER TURBINE - A turbine having a runner with a small number of blades, usually four to eight, to which the water is supplied in a whirling axial direction; the blades are rigidly fastened to the hub.

FRANCIS TURBINE - A turbine having a large number of fixed buckets, usually nine or more, to which the water is supplied in a whirling radial direction.

IMPULSE TURBINE - A turbine having one or more free jets discharging into an aerated space and impinging on the buckets of the runner.

KAPLAN TURBINE - An adjustable-blade propeller turbine named for the Austrian inventor who developed the original design.

MODEL STUDY - A study conducted in a hydraulic laboratory using scale models of turbines.

PELTON WHEEL - An impulse-type hydraulic turbine, which is shaped like a wheel and has a series of cast steel buckets attached to its periphery.

PENSTOCK - A large water conduit, which is subjected to high internal pressures and is fully self-supporting.

PROTOTYPE STUDY - A field investigation at a specific unit within a powerhouse.

PUMPED-STORAGE PLANT - A hydroelectric plant that uses off-peak power from an external source to pump water from a lower reservoir to an upper storage reservoir; this water is then used to generate power during periods of high load demand by reversing the direction of flow.

REACTION TURBINE - A turbine having a water supply case, a mechanism for controlling the quantity of water and for distributing it equally over the entire runner intake, and a draft tube.

REVERSIBLE PUMP/TURBINE - A Francis-type turbine designed to operate as a pump in one direction of rotation and as a turbine in the opposite direction of rotation.

RUNNER - The rotating element of the turbine, which converts hydraulic energy into mechanical energy.

TUBULAR TURBINE - An axial-flow, propeller-type turbine, which may have either a vertical, horizontal, or inclined shaft.

WICKET GATES - The angularly adjustable, streamlined elements that control the flow of water to the turbine or control the discharge from the pump.

---

[a]Technical terms referring to turbine design and operation taken from Allis-Chalmers Corporation (undated).

APPENDIX B

CONTACTS

SOURCES OF INFORMATION ON FISH TURBINE MORTALITY

Contact	Agency and Address	Area of Expertise
F. J. Andrew	International Pacific Salmon Fisheries Commission New Westminster British Columbia, Canada V3L 4X9 604-521-3771	Mortality studies of sockeye pink salmon at hydro electric sites
Carl F. Baren	USFWS, Fishery Assistance Federal Building P. O. Box 1140 Montpelier, VT 05602 802-220-9476	Limnological studies at pumped-storage-facilities
R. M. Baxter	Applied Research Division Canada Centre for Inland Waters Burlington, Ontario Canada L7R 4A6 416-637-4506	Review/environmental effects of dams and impoundments
Milo C. Bell	College of Fisheries University of Washington Seattle, WA 98195 206-543-4287 (Home) 206-355-4471	Authority on Columbia River fish passage-turbine studies
David Bristol	Niagara Mohawk Power Corporation Syracuse, NY 13210 315-474-1511	Utility development of hydropower
J. P. Clugston	USFWS 206 Highway 123 By-Pass Clemson, SC 29631 803-654-1340	Fishery research/ pumped storage
William Crean	Holyoke Water Power Co. One Canal Street Holyoke, MA 01040 413-536-5520	Utility role in hydro-power research
Mike Dell	Grant County Public Utilities Division P. O. Box 878 Ephrata, WA 98823 509-754-3541	Role of public utilities' studies in Grant, Douglas, and Chelan counties

SOURCES OF INFORMATION ON FISH TURBINE MORTALITY
(Continued)

Contact	Agency and Address	Area of Expertise
Tom Doyle	Department of Natural Resources Fisheries Division Box 30028 Lansing, MI 48909 417-373-1280	Involved in turbine studies/Indiana and Michigan
Wesley Ebel	Northwest and Alaska Fisheries Center National Marine Fisheries Service, NOAA 2725 Montlake Boulevard East Seattle, WA 98112 206-442-4445	Gas saturation
Quentin Edson	Federal Energy Regulatory Commission 825 North Capitol St., N.E. Washington, D.C. 20426 202-376-1768	Permit information for licensed hydro projects
Rex Elder	Bechtel Corporation P. O. Box 3965 San Francisco, CA 94119 415-768-6562	Spatial-temporal distribution of downstream migrants in Columbia River
Robert Ferguson	B.C. Hydro Harbor Center P. O. Box 12121 555 W. Hastings Street Vancouver, B.C. VCB 4T6 604-663-3757	Turbine mortality studies/Bennett Dam
D. H. Fickeisin	Pacific Northwest Laboratory Richland, WA 99352 509-375-2749	Hydro effects - non-turbine related
James Follin, Jr.	Johns Hopkins University Baltimore, MD 21218 301-792-7145	Oxygenation investigations/small-scale hydro
James Gardner	Georgia Power Company 791 DeKalb Decatur, GA 30300 404-522-6060; Ext. 2169	Literature search (w/ Miracle) on pumped storage

SOURCES OF INFORMATION ON FISH TURBINE MORTALITY
(Continued)

Contact	Agency and Address	Area of Expertise
Glen H. Geen	Department of Biological Sciences Simon Fraser University Burnaby, British Columbia Canada V5A 1S6 604-291-3536	Reviewed hydroelectric power/Canada
E. P. Gould	U.S. Army Corps of Engineers Northeast Division 424 Trapelo Road Waltham, MA 02154 617-894-2400; Ext. 313	General information
Marshall Goulding	Chief Engineer, Susquehanna River Basin Commission 1721 N. Front Street Harrisburg, PA 17102 717-238-0424	Instream flow data
John Gregg	Chief Engineer, Douglas County Public Utilities Division 1151 Valley Mall Parkway E. Wenatchee, WA 98801 509-884-7191	Utilities' role in hydroelectric research
Richard W. Gregory	University of Florida Cooperative Fishery Research Unit Gainesville, FL 32611 904-392-1861	Provided innumerable contacts
John Gulvas	Consumers Power Company 1945 W. Parnall Road Jackson, MI 49201 517-788-0550	Species composition of Ludington Reservoir
Jim Haas	Department of Fish and Wildlife P. O. Box 3503 Portland, OR 97208 503-229-5433	Ice trash sluiceway/ guidance structures

SOURCES OF INFORMATION ON FISH TURBINE MORTALITY
(Continued)

Contact	Agency and Address	Area of Expertise
Bernard Halla	Director, Department of Natural Resources Wildlife Administration Anapolis, MD 21401 301-269-2752	General information
Joseph T. Johnson	Environmental Assessment and Support Staff Energy Demonstrations and Technology 1110 Chestnut Street Tower II Chattanooga, TN 37401 615-755-6531	Provided excellent contacts/pumped storage
John Kelso	Department of Fisheries and Oceans 875 Queen Street, E. Sault Ste. Marie Ottawa, Ontario, Canada P6A 2B3 705-942-2848	Entrainment/impingement/Great Lakes
William Knapp	USFWS 1 Gateway Center - Suite 700 Newton Corner, MA 02158 617-965-5100	Suggested Rizzo and Kynard contacts
Robert Lackey	USFWS - Eastern Energy and Land Use Team Kearneysville, WV 25430 304-725-2061	Water resources group leader/general information
Boyd Kynard	Massachusetts Cooperative Fisheries Unit University of Massachusetts Amherst, MA 01003 413-545-2011	Project leader/ Connecticut River project
Bernie Leman	Chelan County Public Utility District Wenatchee, WA 98801 509-663-8121	Bulb turbine mortality reports

SOURCES OF INFORMATION ON FISH TURBINE MORTALITY
(Continued)

Contact	Agency and Address	Area of Expertise
Charles Liston	Department of Fisheries and Wildlife Michigan State University East Lansing, MI 48824 517-355-4477	Pumped-storage turbine mortality work at Ludington, MI
Edward Mains	U.S. Army Engineer Division North Pacific Division P. O. Box 2870 Portland, Oregon 97208 503-221-3828	Turbine mortality/fish passage contacts and information
Dilip Mathur	RMC - Ecological Division Muddy Run Ecological Laboratory P. O. Box 10 Drumore, PA 17518 717-548-2121	Review of sampling techniques used in monitoring pumped-storage facilities
Howard Mayo, Jr.	Allis-Chalmers Corporation East Berlin Road Box 712 York, PA 17405 717-792-3511	Hydroelectric turbines/ engineering aspects
Alfred L. Meister	Atlantic Sea Run Salmon Commission Building 34, Idaho Avenue Bangor, ME 04401 207-947-8627	General information
James Northrup	Appalachian Power Company Roanoke, VA 24015 703-344-1411	Knowledge of utility research role
Raymond C. Oligher	Walla Walla District Corps of Engineers Bulding 602, City-County Airport Walla Walla, WA 99362 509-525-5500; Ext 340	Fingerling mortality/ turbine efficiency

SOURCES OF INFORMATION ON FISH TURBINE MORTALITY
(Continued)

Contact	Agency and Address	Area of Expertise
James Oliver	USFWS 500 N.E. Multaomah Street Portland, Oregon 97232 503-221-3859	Columbia River Project fisheries research
Tony Pacheco	National Marine Fisheries Service Middle Atlantic Coastal Fish. Cntr. Sandy Hook Laboratory Highlands, NJ 07732 201-872-0200	Monitoring/Cornwall Proj.
Russ Porter	Pacific Marine Fisheries Commission 528 S.W. Mills Street Portland, OR 97201 503-229-5840	General information
Steve Rideout	U.S. Fish and Wildlife Service 4 Whalley Street Hadley, MA 01035 413-586-4416	Coordinator for the Connecticut River Project
Ben Rizzo	Bureau of Sport Fisheries and Wildlife USFWS 1 Gateway Center - Suite 700 Newton Corner, MA 02158 617-965-5100; Ext. 287	Fish passage work
C. P. Ruggles	Executive Biologist Montreal Engineering, Ltd. Garrison Place 1526 Dresden Row Halifax, Nova Scotia B3J 3J1 902-426-3594	Expert in overall turbine mortality work in Canada/Salmon - downstream passage
Gary Rush	Environmental Engineer Philadelphia Electric Company 2301 Market Street Philadelphia, PA 19101 215-841-4000	General information contact

SOURCES OF INFORMATION ON FISH TURBINE MORTALITY
(Continued)

Contact	Agency and Address	Area of Expertise
D. Scarrett	St. Andrews Biological Station New Brunswick, Canada E0G 2X0 506-529-8854	Fisheries biologist
K. E. H. Smith	Freshwater and Anadromous Division, Resource Branch Department of Fisheries and Oceans P. O. Box 550 Halifax, Nova Scotia B3J 2S7 902-426-3594	Mortality tests on juvenile salmon at Canadian dam sites
O. Sproul	Civil Engineering Department Ohio State University Columbus, Ohio 43210 614-422-2771	Effects of super-saturated gases below 60' dam
Q. J. Stober	Fisheries Research Institute College of Fisheries University of Washington Seattle, WA 98195 206-543-9041	Devised nets to improve sampling at pumped storage facility (Banks Lake, WA)
Andrew V. Stout	International Atlantic Salmon 9 South Street Hanover, NH 03755 603-643-6525	General information
Lewis Vogel	USFWS Reservoir Study Team Fayetteville, AR 72701 501-521-3063	Tail water studies/ non-hydro sites
Charles Wallburg	USFWS East Central Reservoir Study Team Lexington, KY 502-843-4376	General information

SOURCES OF INFORMATION ON FISH TURBINE MORTALITY
(Continued)

Contact	Agency and Address	Area of Expertise
Walton Watt	Head, Fish Habitat Protection Freshwater and Anadromous Division Resource Branch Department of Fisheries and Oceans P. O. Box 550 Halifax, Nova Scotia B3J 2S7 902-426-3606	Turbine studies of salmon mortality/ preparing literature review
Don Weitkamp	Parametrics 13020 Northup Way, Suite 8 Bellevue, WA 98005 206-455-2550	Literature review/ turbine mortality work

ORNL/TM-7521
Distribution Category-UC-97e

INTERNAL DISTRIBUTION

1. S. M. Adams
2-3. S. I. Auerbach
4. L. W. Barnthouse
5. G. F. Cada
6. S. W. Christensen
7. C. C. Coutant
8. R. B. Craig
9. J. W. Elwood
10-269. S. G. Hildebrand
270. P. Kanciruk
271. J. M. Loar
272. R. B. McLean
273. D. E. Reichle
274. R. D. Roop
275. T.H. Row
276. W. Van Winkle
277. D. S. Vaughan
278. H. E. Zittel
279-288. ESD Library
289-290. Central Research Library
291-292. Laboratory Records Dept.
293. Laboratory Records, ORNL-RC
294. ORNL Y-12 Technical Library
295. ORNL Patent Office

EXTERNAL DISTRIBUTION

296. Alabama Energy Management Board, Montgomery, AL 36130
297. F. J. Andrew, International Pacific Salmon Fisheries Commission, New Westminster, British Columbia, Canada V3L 4X9
298. Assistant to the Governor for Energy Affairs, c/o Secretary of State, P.O. Box 1401, Townsend Building, Dover, DE 19901
299. R. M. Baxter, Applied Research Division, Canada Centre for Inland Waters, Burlington, Ontario, Canada L7R 4A6
300. Milo C. Bell, College of Fisheries, University of Washington, Seattle, WA 98195
301. Rudolph A. Black, Department of Energy, Resource Applications, 12th and Pennsylvania Ave., NW, Washington, DC 20461
302. Robert W. Brocksen, Manager, Ecological Programs, Electric Power 49, Research Institute, P.O. Box 10412, Palo Alto, CA 94303
303. Peter Brown, Franklin Pierce Law Center, Energy Law Institute, Concord, NH 03301
304. J. D. Buffington, Council on Environmental Quality, 722 Jackson Place, N.W., Washington, DC 20006
305. Ralph Burr, Resource Applications, Department of Energy, 12th and Pennsylvania Avenue, N.W., Washington, DC 20461
306. W. W. Burr, Office of Health and Environmental Research, Department of Energy, Washington, DC 20545
307. California Energy Commission, 1111 Howe Avenue, Sacramento, CA 95825
308. J. Thomas Callahan, Associated Director, Ecosystems Studies Program, National Science Foundation, Washington, DC 20550
309. J. P. Clugston, USFWS, 206 Highway 123 By-Pass, Clemson, SC 29631

310. Ruth C. Clusen, Assistant Secretary for Environment, Department of Energy, Washington, DC 20545
311. William J. Coppoc, Texaco, Inc., P.O. Box 509, Beacon, NY 12508
312. Ronald Corso, Deputy Director, Division of Licensing, Federal Energy Regulatory Commission, 825 North Capitol Street, N.E., Washington, DC 20426
313. Leo Creighton, NUS Corporation, Southwest Environmental Center, 14011 Ventura Boulevard, Sherman Oaks, CA 91423
314. Roger C. Dahlman, Office of Health and Environmental Research, Department of Energy, Washington, DC 20545
315. Ruth Davis, Assistant Secretary for Resource Applications, Department of Energy, 12th and Pennsylvania Ave., N.W., Washington, DC 20461
316. Stanley N. Davis, Head, Department of Hydrology and Water Resources, University of Arizona, Tucson, AZ 85721
317. Mike Dell, Grant County Public Utilities Division, P.O. Box 878, Ephrata, WA 98823
318. Department of Conservation, P.O. Box 44275, Baton Rouge, LA 70804
319-323. Department of Energy, Region I, 150 Causeway Street, Boston, MA 02114
324-328. Department of Energy, Region II, 26 Federal Plaza, New York, NY 10007
329-333. Department of Energy, Region III, 1421 Cherry Street, Philadelphia, PA 19102
334-338. Department of Energy, Region IV, 1655 Peachtree Street, N.E., Atlanta, GA 30309
339-343. Department of Energy, Region V, Federal Office Building, 175 West Jackson Boulevard, Chicago, IL 60604
344-348. Department of Energy, Region VI, 2626 Mockingbird Lane, P.O. Box 35228, Dallas, TX 75270
349-353. Department of Energy, Region VII, 324 East 11th Street, Kansas City, MO 64106
354-358. Department of Energy, Region VIII, P.O. Box 26247-Belmar Branch, 1075 South Yukon Street, Lakewood, CO 80226
359-363. Department of Energy, Region IX, Barclay Bank Boulevard, 111 Pine Street, San Francisco, CA 94111
364-368. Department of Energy, Region X, 1962 Federal Building, 915 2nd Avenue, Seattle, WA 98174
369. Department of Energy, 101 Commerce Street, Newark, NJ 07102
370. Department of Energy, 528 Cottage Street, N.E., Salem, OR 97310
371. Department of Energy and Minerals, P.O. Box 2770, Sante Fe, NM 87501
372. Department of Planning and Economic Development, P.O. Box 2359, Honolulu, HI 96804
373. Director, Office of Biological Services, U.S. Fish and Wildlife Service, Washington, DC 20240
374. Vaughn Douglass, U.S. Fish and Wildlife Service, Route 3, Box 44, Kearneysville, WV 25430

375. Thomas Doyle, Michigan Department of Natural Resources, Fisheries Division, Box 30029, Lansing, MI 48909
376. Wesley Ebel, National Marine Fisheries Service, Northwest Alaska Fisheries Center, 2725 Montlake Boulevard, Seattle, WA 98112
377. Rex Elder, Bechtel Corporation, P.O. Box 3965, San Francisco, CA 94119
378. Energy Capability and Management, State Energy Office Providence, RI 02903
379. Energy Conservation and Policy Office, 960 Plaza West Building, Little Rock, AR 72205
380. Energy Division, Department of Planning and Energy Policy, 80 Washington Street, Hartford, CT 06115
381. Energy Management Division, North Carolina Department of Commerce, 215 East Lane Street, Raleigh, NC 27601
382. Energy Management Office, Edgar Brown Building, 1205 Pendleton Street, Columbia, SC 29201
383. Energy Policy Office, State Department of Natural Resources, 301 West Preston Street, Baltimore, MD 21201
384. Robert Ferguson, B. C. Hydro, Harbor Center, P.O. Box 12121, 555 W. Hastings Street, Vancouver, B.C. VCB 4T6
385. D. H. Fickeisin, Pacific Northwest Laboratory, Richland, WA 99352
386. James Folin, Applied Physics Laboratory, John Hopkins University, Laurel, MD 20810
387. Gene Fritts, National Power Plant Team, U.S. Fish and Wildlife Service, 2929 Plymouth Road, Rm. 206, Ann Arbor, MI 48105
388. Fuel and Energy Division, Governor's Office of Economic and Community Development, 1262 1/2 Greenbriar Street, Charleston, WV 25305
389. James Furse, Resource Applications, Department of Energy, 12th and Pennsylvania Avenue, N.W., Washington, DC 20461
390. Robert M. Garrels, Department of Marine Science, 830 First Street South, St. Petersburg, FL 33701
391. Glen H. Geen, Department of Biological Sciences, Simon Fraser University, Burnaby, British Columbia, Canada V5A 1S6
392-396. Charles Gilmore, Chief, Advanced Technology Branch, Department of Energy, 550 Second Street, Idaho Falls, ID 83401
397. Norman R. Glass, National Ecological Research Laboratory, U.S. Environmental Protection Agency, 200 Southwest 35th Street, Corvallis, OR 97330
398. Steven Gloss, Department of Natural Resources, Fernow Hall, Cornell University, Ithaca, NY 14853
399. Governor's Council on Energy, 26 Pleasant Street, Concord, NH 03301
400. Governor's Energy Council, State and Third Streets, Harrisburg, PA 17120
401. John Gregg, Chief Engineer, Douglas County Public Utilities Division, 1151 Valley Mall Parkway, E. Wenatchee, WA 98801

402-462. George Grimes, Resource Applications, Department of Energy, 12th and Pennsylvania Ave., N.W., Washington, DC 20461
463. Philip F. Gustafson, Radiological Physics Division, D-203, Argonne National Laboratory, 9700 S. Cass Avenue, Argonne, IL 60439
464. Jim Haas, Department of Fish and Wildlife, P.O. Box 3503, Portland, OR 97208
465. Bob Halbriter, Obrien and Gere, 1304 Buckley Road, Syracuse, NY 13221
466. Gordon Hall, Tennessee Valley Authority, Evans Building, Knoxville, TN 37902
467. Heyward Hamilton, Jr., Ecological Research Division, Office of Health and Environmental Research, Department of Energy, Washington, DC 20545
468. James R. Hanchey, Institute for Water Resources, Kingman Building, Ft. Belvoir, VA 22060
469. Hal Hollister, Office of Assistant Secretary of Environment Department of Energy, Washington, DC 20545
470. Peter House, Office of Technology Impacts, Department of Energy, Washington, DC 20545
471. Hydropower Study Manager, New England River Basins Commission, 53 State Street, Boston, MA 02109
472. Indiana Energy Group, 115 North Pennsylvania Street, Indianapolis, IN 46204
473. Institute of Natural Resources, 309 West Washington Street, Chicago, IL 60606
474. Iowa Energy Policy Council, 707 East Locust Street, Des Moines, IA 50319
475. Robert M. Jenkins, United States Fish and Wildlife Service, National Reservoir Research Program, Fayetteville, AR 72701
476. Nelsen Jacobs, U.S. Bureau of Reclamation, P.O. Box 25007, Denver, CO 80226
477. Joseph T. Johnson, Environmental Assessment and Support Staff, Energy Demonstrations and Technology, 1110 Chestnut Street Tower II, Chattanooga, TN 37401
478. Peter Kakela, Department of Resource Development, Michigan State University, East Lansing, MI 48824
479. Senator John Kelly, P.O. Box 30036, Lansing, MI 48909
480. John Kelso, Department of Fisheries and Oceans, 875 Queen Street, E. Sault Ste. Marie, Ottawa, Ontario, Canada P6A 2B3
481. Kentucky Department of Energy, Capitol Plaza Tower, Frankfort, KY 40601
482. Paul Kirshen, Resource Policy Center, Thayer School of Engineering, Dartmouth College, Hanover, NH 03755
483-487. William Knapp, Northeast Power Plant Activities Leader, U.S. Fish and Wildlife Service, One Gateway Center, Newton Corner, MA 02158
488. Michael Kowalchuk, Direction des Eaux Interieures, 1901 Avuenue Victoria, Regina, Saskatchewan, S4P 3R4 Canada
489. Boyd Kynard, Massachusetts Cooperative Fisheries Unit, University of Massachusetts, Amherst, MA 01003

490. Robert Lackey, United States Fish and Wildlife Service, Eastern Land Use Team, Route 3, Box 44, Kearneysville, WV 25430
491. George H. Lauff, W. K. Kellogg Biological Station, Michigan State University, Hickory Corners, MI 49060
492. Bernie Leman, Chelan County Public Utility District, Wenatchee, WA 98801
493. Simon A. Levin, Ecology and Systematics Department, Cornell University, Ithaca, NY 14850
494. Charles Liston, Department of Fisheries and Wildlife, Michigan State University, East Lansing, MI 48824
495. Cliff Long, National Marine Fisheries Service, Northwest Alaska Fisheries Center, 2725 Montlake Boulevard, Seattle, WA 98112
496. Edward Mains, U.S. Army Engineer Division, North Pacific Division, P.O. Box 2870, Portland. OR 97208
497. Massachusetts Energy Policy Office, 73 Tremont Street, Boston, MA 02108
498. Dilip Mathur, RMC - Ecological Division, Muddy Run Ecological Laboratory, P.O. Box 10, Drumore, PA 17518
499. Howard Mayo, Jr., Allis-Chalmers Corporation, East Berlin Road, Box 712, York, PA 17405
500. Helen N. McCammon, Office of Health and Environmental Research, Department of Energy, Germantown, MD 20764
501. Richard McDonald, Institute for Water Resources, Kingman Building, Ft. Belvoir, VA 22060
502. Michigan Energy Administration, Michigan Department of Commerce, Law Building - 4th Floor, Lansing, MI 48913
503. Minnesota Energy Agency, 740 American Center Building, 160 East Kellogg Boulevard, St. Paul, MN 55101
504. Mississippi Fuel and Energy Management Commission, Woolfolk State Office Building, Jackson, MS 39302
505. Missouri Energy Program, Department of Natural Resources, P.O. Box 1039, Jefferson City, MO 65101
506. Montana Energy Office, Capitol Station, Helena, MT 59601
507. Municipal Planning Office, Executive Office of the Mayor, District Building, 13th and E Streets, N.W., Washington, DC 20004
508. Nebraska Energy Office, P.O. Box 95085, Lincoln, NE 68509
509. Nevada Department of Energy, 1050 East Will - Suite 405, Carson City, NV 89710
510. New York State Energy Office, Agency Building No. 2, Empire State Plaza, Albany, NY 12223
511. Office of Economic Planning and Development, Capitol Tower, Phoenix, AZ 85007
512. Office of Emergency and Energy Services, 7700 Midlothian Turnpike, Richmond, VA 23235
513. Office of Energy Policy, State Capitol, Pierre, SD 57501
514. Office of Energy Resources, Office of Planning and Budget, 270 Washington Street, S.W., Atlanta, GA 30334

515. Office of Energy Resources, 55 Capitol Street, Augusta, ME 04339
516. Office of State Planning and Energy, 1 Wilson Street, Madison, WI 53702
517. Office of the Governor, Minnillas Government Center, North Building, P.O. Box 41089, Minnillas Station, Santurce, PR 00940
518. Ohio Energy and Resource Development Agency, State Office Tower, 30 East Broad Street, Columbus, OH 43215
519. Oklahoma Department of Energy, 4400 North Lincoln Boulevard, Oklahoma City, OK 73105
520. Raymond C. Oligher, Walla Walla District, Corps of Engineers, Building 602, City-County Airport, Walla Walla, WA 99362
521. W. S. Osburn, Office of Health and Environmental Research, Department of Energy, Washington, DC 20545
522. Robert Rabin, National Science Foundation, Washington, DC 20545
523. Robert Raleigh, U.S. Fish and Wildlife Service, 2625 Redwing Road, Ft. Collins, CO 80521
524. Gerald J. Rausa, Environmental Protection Agency, 401 M Street, N.W., Washington, DC 20460
525. Regional Administrator, U.S. Environmental Protection Agency - Region I, John F. Kennedy Building, Boston, MA 02203
526. Regional Administrator, U.S. Environmental Protection Agency - Region II, 26 Federal Plaza, New York, NY 10007
527. Regional Administrator, U.S. Environmental Protection Agency - Region III, 6th and Walnut Streets, Philadelphia, PA 19106
528. Regional Administrator, U.S. Environmental Protection Agency - Region IV, 345 Courtland Street, N.E., Altanta, GA 30308
529. Regional Administrator, U.S. Environmental Protection Agency - Region V, 230 South Dearborn Street, Chicago, IL 60604
530. Regional Administrator, U.S. Environmental Protection Agency - Region VI, First International Building, 1201 Elm Street, Dallas, TX 75270
531. Regional Administrator, U.S. Environmental Protection Agency - Region VII, 1735 Baltimore Street, Kansas City, MO 64108
532. Regional Administrator, U.S. Environmental Protection Agency - Region VIII, 1860 Lincoln Street, Denver, CO 80203
533. Regional Administrator, U.S. Environmental Protection Agency - Region IX, 215 Fremont Street, San Francisco, CA 94105
534. Regional Administrator, U.S. Environmental Protection Agency - Region X, 1200 6th Street, Seattle, WA 98101
535. Donna Reichle, Science Applications Inc., 800 Oak Ridge Turnpike, Jackson Plaza Towers, Suite 1000, Oak Ridge, TN 37830

536. J. J. Reisa, Office of Toxic Substances, Environmental Protection Agency, Washington, DC 20460
537. Paul C. Risser, Department of Botany, University of Oklahoma, Norman, OK 73069
538-539. Ben Rizzo, U.S. Fish and Wildlife Service, One Gateway Center, Newton Corne, MA 02158
540. John Robinson, HARZA Engineering Co., 150 South Wacker Drive, Chicago, IL 60606
541. Janice Rosenberg, Wapora Inc., 35 East Wacken Drive, Chicago, IL 60601
542. James Ruane, Tennessee Valley Authority, 246 401 Building, Chattanooga, TN 37401
543. C. P. Ruggles, Executive Biologist, Montreal Engineering, Ltd., Garrison Place, 1526 Dresden Row, Halifax, Nova Scotia B3J 3J1
544. Brent Russell, EG & G Idaho Inc., P.O. Box 1625, Idaho Falls, ID 83415
545. George Saunders, Office of Health and Environmental Research, Department of Energy, Washington, DC 20545
546. D. Scarrett, St. Andrews Biological Station, New Brunswick, Canada EOG 2XO
547. William M. Seawell, Tennessee Valley Authority, Evans Building, Knoxville, TN 37902
548. Carole Shriner, Science Applications Inc., 800 Oak Ridge Turnpike, Jackson Plaza Towers, Suite 1000, Oak Ridge, TN 37830
549. Farwell Smith, Resource Applications, Department of Energy, 12th and Pennsylvania Avenue, N.W., Washington, DC 20461
550. K. E. H. Smith, Freshwater and Anadromous Division, Resource Branch, Department of Fisheries and Oceans, P.O. Box 550, Halifax, Nova Scotia B3J 2S7
551. Ronald Smith, National Conference of State Legislatures, 1405 Curtis Street, Denver, CO 80202
552. State Energy Office, Mackay Building, 338 Denali Street, Anchorage, AK 99501
553. State Energy Office, State Capitol, Denver, CO 80203
554. State Energy Office, State House, Boise, ID 83720
555. State Energy Office, 108 Collins Building, Tallahassee, FL 32304
556. State of Kansas Energy Office, 503 Kansas Avenue, Topeka, KS 66603
557. State Office of Energy Management, Capitol Place Office, 1533 North 12th Street, Bismarck, ND 58501
558. State Planning Coordinator, 2320 Capitol Avenue, Cheyenne, WY 82002
559. Q. J. Stober, Fisheries Research Institute, College of Fisheries, University of Washington, Seattle, WA 98195
560. Tennessee Energy Authority, 250 Capitol Hill Building, Nashville, Tn 37219
561. Texas Energy Advisory Council, 7703 North Lamar Boulevard, Austin, TX 78752

562. Kent W. Thornton, Environmental Laboratory, United States Army Corps of Engineers, Waterways Experiment Station, Vicksburg, MS 39180

563-567. Susan Turbak, Science Applications Inc., 800 Oak Ridge Turnpike, Jackson Plaza Towers, Suite 1000, Oak Ridge, TN 37830

568. Gerald Ulrickson, Science Applications, Inc., 800 Oak Ridge Turnpike, Oak Ridge, TN 37830

569. Utah Energy Office, 231 East 400 South, Salt Lake City, UT 84111

570. Vermont Energy Office, Pavilion Office Building, 109 State Street, Montpelier, VT 05602

571. Harold Wahlquist, U.S. Fish and Wildlife Service, Federal Building, 75 Spring St., S.W., Atlanta, GA 30303

572. Gary Waltenbaugh, Pacific Northwest River Basin Commission, One Columbia River, Vancourver, WA 98660

573. Richard H. Waring, Department of Forest Science, Oregon State University, Corvallis, OR 97331

574. Cal Warnick, Idaho Water Research Institute, University of Idaho, Washington Energy Office, 400 East Union Street, Olympia, WA 98504

575. Walton Watt, Head, Fish Habitat Protection, Freshwater and Anadromous Division, Resource Branch, Department of Fisheries and Oceans, P.O. Box 550, Halifax, Nova Scotia B3J 2S7

576. Robert L. Watters, Office of Health and Environmental Research, Department of Energy, Washington, DC 20545

577. Don Weitkamp, Parametrix, Inc., 13020 Northup Way, Suite 8, Bellevue, WA 98005

578. Robert W. Wood, Office of Health and Environmental Research, Department of Energy, Washington, DC 20545

579. William B. Wren, Tennessee Valley Authority, Athens, AL 35611

580. David Zoellner, National Electric Cooperative Association, 1800 Massachusetts Ave., N.W., Washington, DC 20036

581. Office of Assistant Manager for Energy Research and Development, Department of Energy, Oak Ridge Operations Office, Oak Ridge, TN 37830

582-730. Given distribution as shown in DOE/TIC-4500 under category UC-97e, Hydroelectric Power Generation

☆U.S. GOVERNMENT PRINTING OFFICE: 1980-740-062/446