ORNL/Sub/81-21099/1&04

26 FEBRUARY 1982

REPORT EBT-P010

FUSION ELMO BUMPY TORUS ENERGY

Copy No. 73

Elmo Bumpy Torus Proof Of Principle

PHASE II — TITLE 1 REPORT

Volume IV MICROWAVE SYSTEM

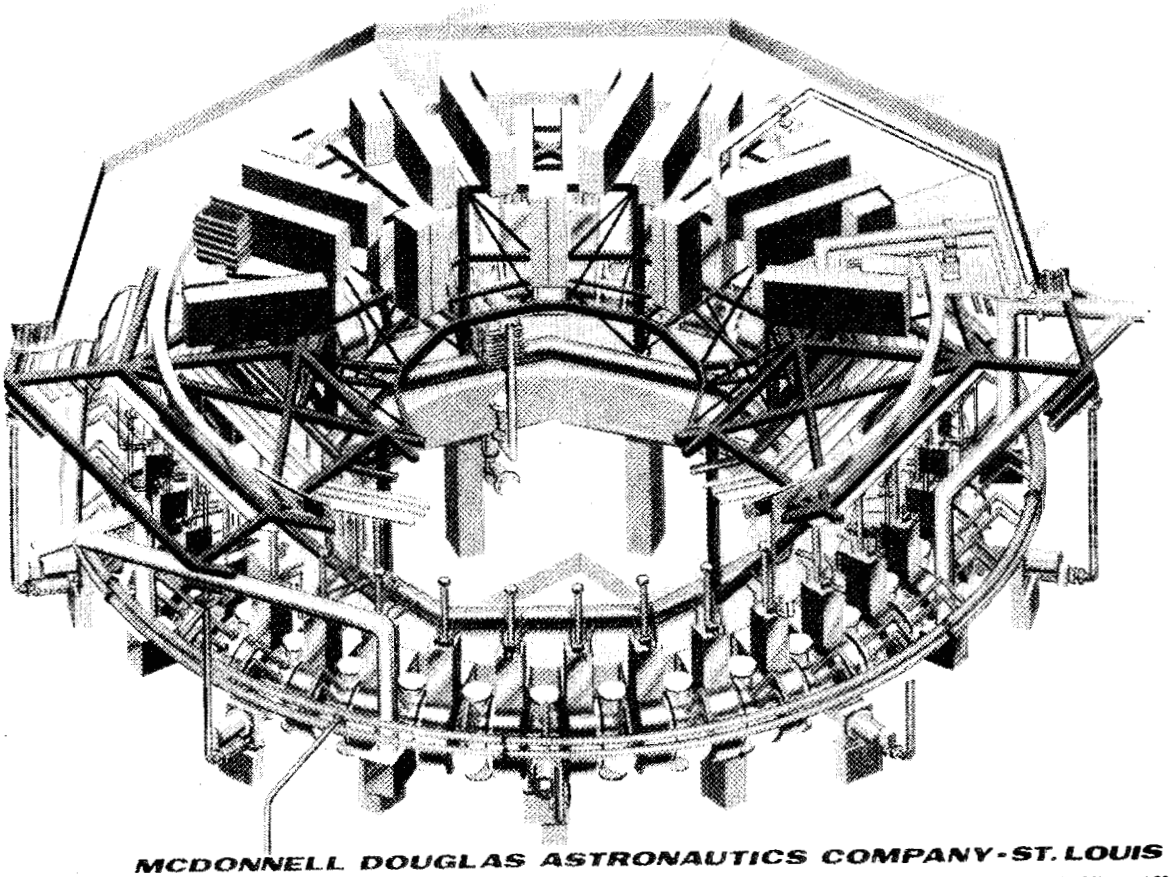

MCDONNELL DOUGLAS ASTRONAUTICS COMPANY - ST. LOUIS DIVISION
Saint Louis, Missouri 63166 (314) 232-0232

MARTIN MARIETTA ENERGY SYSTEMS LIBRARIES
3 4456 0156098 5

DOUGLAS CORPORATION

PRELIMINARY DESIGN REPORT

MICROWAVE SYSTEM

VOLUME IV

PREPARED BY: _____
R. N. Adams, Manager
EBT-P Microwave System

APPROVED BY: _____
H. F. Imster, Manager
EBT-P Engineering - MDAC

APPROVED BY: _____
R. J. DeBellis, Manager
EBT-P Project - MDAC

APPROVED BY: _____
H. C. McCurdy, Manager
EBT-P Technology Development - ORNL

APPROVED BY: _____
A. L. Boch, Manager
EBT-P Project - ORNL

Reference Index

Volume I — Device Summary

Volume II — Toroidal Vessel

Volume III — Magnet System

Volume IV — Microwave System

Volume V — Vacuum Pumping System

Volume VI — Instrumentation and Control

Volume VII — Cryogenic Systems

Volume VIII — Device Utilities

Volume IX — Support Structure

TABLE OF CONTENTS

SECTION		PAGE
1.0	INTRODUCTION AND SUMMARY	1
1.1	MICROWAVE SYSTEM OVERVIEW	5
1.2	ORGANIZATION OF THIS VOLUME	6
2.0	PURPOSE AND SCOPE	7
2.1	SYSTEM INTEGRATION	7
2.2	DETAILED ENGINEERING DRAWINGS AND SPECIFICATIONS	10
2.3	SCHEDULE, MANPOWER AND COST ESTIMATES	11
2.4	PROCUREMENTS, MANUFACTURING PLANS AND QA PLAN	11
2.5	MICROWAVE SYSTEM INTERFACE DESCRIPTION	11
2.6	MICROWAVE SYSTEM PRELIMINARY SPECIFICATIONS	11
3.0	DESIGN CRITERIA	20
3.1	RFP DESIGN CRITERIA REQUIREMENTS	20
3.2	MICROWAVE SYSTEM	23
3.3	EBT-P MICROWAVE SUPPLEMENTAL DESIGN REQUIREMENTS	26
3.4	ENVIRONMENTAL DESIGN CRITERIA	26
4.0	DESIGN DESCRIPTION	27
4.1	GYROTRON SUBSYSTEM	27
4.2	GYROTRON MOUNT AND SUPPORT SYSTEM	30
4.3	MICROWAVE DISTRIBUTION	31
4.4	ECRH POWER SUPPLY SUBSYSTEM	36

TABLE OF CONTENTS (Continued)

SECTION PAGE

5.0 SUPPORTING ANALYSIS 60

5.1 28 AND 60 GHZ MICROWAVE DISTRIBUTION SYSTEM POWER FLOW FOR EBT-P 60

5.2 GYROTRON-TO-GYROTRON REQUIRED SEPARATION AS A FUNCTION OF INTERFERING MAGNETIC FIELDS 60

5.3 X-RAY EFFECTS ON GYROTRON AND GYROTRON MOUNT FABRICATION MATERIALS 69

6.0 SYSTEM SCHEDULES 69

7.0 REFERENCES 71

APPENDIX A – SAFETY CONSIDERATIONS A-1

APPENDIX B – 28 GHZ GYROTRON, PRELIMINARY SPECIFICATION . B-1

APPENDIX C – 60 GHZ GYROTRON, PRELIMINARY SPECIFICATION . C-1

APPENDIX D – PRELIMINARY ECRH COOLING REQUIREMENTS D-1

APPENDIX E – ECRH POWER SUPPLY MANUFACTURING/ACCEPTANCE PLAN E-1

APPENDIX F – GYROTRON SETUP CONDITIONING, ON/OFF F-1

APPENDIX G – SYSTEM DRAWINGS G-1

TABLE OF CONTENTS (Continued)

SECTION **PAGE**

LIST OF PAGES

ii - xii
1 - 71
A-1 - A-15
B-1 - B-29
C-1 - C-10
D-1 - D-2
E-1 - E-10
F-1 - F-11
G-1 - G-56

LIST OF FIGURES

FIGURE		PAGE
1.0.1	EBT-Proof of Principle Experiment	2
2.0.1	Title I Preliminary Design Task Description	8
2.0.2	Title II Detailed Microwave System Design	9
2.5.1	Microwave System Interface	12
2.5.2	28 GHZ Gyrotron and Mount Interface Block Diagram	13
2.5.3	60 GHZ Gyrotron and Mount Interface Block Diagram	14
2.5.4	Microwave Distribution Interface Block Diagram	15
2.5.5	ECRH Power Supply Block Diagram	16
2.6.1	Preliminary 28 GHZ Gyrotron Electrical Characteristics	17
2.6.2	Preliminary 60 GHZ Gyrotron Electrical Characteristics	18
3.2.1	Gyrotron Subsystem Interface	24
4.0.1	Microwave System Block Diagram	28
4.1.1	Gyrotron Layout	29
4.3.1	Microwave Distribution System	32
4.3.2 A, B	28 & 60 GHZ Microwave Distribution Schematic	33/34
4.4.1	ECRH Power Supply Block Diagram	37
4.4.2	ECRH Power Supply System Block Diagram	38
4.4.3	EBT-P Building Arrangement	39
4.4.4	EBT-P Outdoor Power Supply Pad	40
4.4.5	EBT-P Cable & Wire Routes	42
4.4.6	C. W. Gyrotron Power Supply Interface	43
4.4.7	ECRH Power Supply Component Identification & Application	45/46
4.4.8	EBT-P ECRH Power Supply Composite Location	47
4.4.9	EBT-P ECRH Power Supply Electrical One Line Diagram	48
4.4.10	EBT-P Gyrotron Mount	50
4.4.11	EBT-P ECRH Power Supply I&C Interface	53
4.4.12	EBT-P Present and Upgrade Gyrotron Location	55
5.1.1 A, B	Microwave Distribution System Schematic	61/62
5.1.2	Microwave Distribution Power Flow - 28 GHZ	62
5.1.3	Microwave Distribution Power Flow - 60 GHZ	63

LIST OF FIGURES (Continued)

FIGURE		PAGE
5.2.1	Field on the Axis of a Single Loop	66
5.2.2	Cross Section of Long Solenoid	66
5.2.3	Field Distribution	66
5.2.4	Magnetic Flux Density As A Function Of Position, F = 60 GHZ	67

LIST OF TABLES

TABLE		PAGE
1.0.1	Principle Microwave System Elements	3
1.0.2	Primary Interfaces	4
4.4.1	Input Power	44
4.4.2	EBT-P ECRH Power Supply Maximum Envelope Size	58
4.4.3	EBT-P ECRH Power Supply Assembly Weight	59
4.4.4	EBT-P ECRH Power Supply Environmental Requirements	59

LIST OF DRAWINGS

		PAGE
70B371000	EBT-P 28 GHz Gyrotron Mount	G-1/G-2
70B371001	EBT-P Gyrotron Support Equipment	G-5/G-6
70B371002	EBT-P Gyrotron Power Supplies	G-9/G-10
70B371003	EBT-P Gyrotron Wiretray Routing Envelope	G-11/G-12
70B371004	EBT-P Envelope Microwave Distribution Systems	G-17/G-18
70B371005	EBT-P Envelope Vacuum Vessel Link Assy, ECRH	G-23/G-24
70B371008	EBT-P Envelope Microwave Switch and Calibration Load	G-29/G-30
70B371009	EBT-P ICD Gyrotron Tube 28 GHz Frequency	G-31/G-32
70B371010	EBT-P ARC Detector Envelope	G-37/G-38
70B371013	EBT-P Coolant Manifold/Interface, Gyrotrons, 1st Level	G-39/G-40
70B371014	EBT-P Gyrotron Locations	G-45/G-46
70B375001	EBT-P Control Panel Device Coolant	G-47/G-48
70B375002	EBT-P Coolant Panel ECRH Distribution System	G-49/G-50

ACRONYMS, ABBREVIATIONS AND INITIALISMS

A	Amperes
ac	Alternating Current
ANSI	American National Standards Institute
atm	Atmosphere
BW	Bandwidth
CT	Current Transformer
CW	Continuous Wave
dc	Direct Current
EBT-P	Elmo Bumpy Torus Proof of Principle
ECRH	Electron Cyclotron Resonant Heating
EMC	Electromagnetic Compatibility
EMI	Electromagnetic Interference
FSCM	Federal Supply Code for Manufacturers
ft	Foot
GFE	Government Funded Equipment
GHz	Gigahertz
hr	Hour
HV	High Voltage
HVPS	High Voltage Power Supply
I&C	Instrumentation and Control
IVR	Induction Voltage Regulator
kcmil	Thousand Circular Mil
K	Kelvin
kJ	Kilojoule
kV	Kilovolt
kW	Kilowatt
LV	Low Voltage
mA	Milliampere
MDAC	McDonnell Douglas Astronautics Company - St. Louis Division
min	Minute
ms	Millisecond
MΩ	Megaohm

ACRONYMS, ABBREVIATIONS, & INITIALISMS (Continued)

NEC	National Electric Code
NEMA	National Electric Manufacturers Association
NFPA	National Fire Protection Association
ORNL	Oak Ridge National Laboratory
ORVIP	Oak Ridge Valley Industrial Park
PACE	Plant and Capital Equipment
pc	Pico Coulombs
psi	Pound Per Square Inch
PT	Potential Transformer
QA	Quality Assurance
SSOW	Subcontractor Statement of Work
TBD	To Be Determined
T	Temperature
V	Voltage
VVT	Variable Voltage Transformer
ϕ	Phase
Ω	Ohms
W	Watts
μs	Microsecond
R	Repeat

1.0 INTRODUCTION AND SUMMARY

The EBT-P Microwave System provides microwaves for electron cyclotron resonance heating (ECRH) to both stabilize and heat the EBT-P plasma. A 28 gigahertz (GHz) system is required to form the hot electron annulus plasma that provides MHD stabilization to the core plasma. A 60 GHz system is required to heat the core plasma and will provide some second harmonic heating of the hot electron annulus.

The proposed EBT-P ECRH system is similar to the ORNL reference baseline design of ORNL/TM-7191. The proposed EBT-P ECRH system design is a direct application of the existing EBT-S system configuration which has received significant testing for validity. The final EBT-P ECRH heating design will evolve from this baseline design with inputs from the Gyrotron Development Program and the Microwave Distribution R & D program. Component concepts generated in the design task must be fabricated and tested in the R & D program, and advances or refinements in component development from the microwave distribution development programs must be incorporated into the final system design. The EBT-P baseline equipment configuration is shown in Figure 1.0.1.

Table 1.0.1 summarizes the principle microwave system elements and their design characteristics. Table 1.0.2 summaries the primary interfaces. The microwave system includes 200 kilowatt (kW) gyrotrons at 60 GHz for core heating and 200 kW gyrotrons at 28 GHz for annulus heating. The basic operating complement will be six (6) 60 GHz tubes and two (2) 28 GHz tubes. PACE (Plant and Capital Equipment) procurement will include four (4) 60 GHz gyrotrons with two (2) 60 GHz tubes procured under operations and the two (2) 28 GHz tubes will be provided, with mounts, from the EBT-S program. Each tube is rigidly mounted on an oil filled tank assembly which provides electrical isolation and cooling. All tubes and mounts will be located in the lower level of the torus enclosure. An extensive demineralized water flow system is required to provide gyrotron cooling.

The electrical requirements of the 60 GHz gyrotron are expected to be very similar to those of the 28 GHz tube except for the focus magnet which will be superconducting for the 60 GHz gyrotron. Basically a 10 amp at 90 kilovolt (kV) beam supply, a 0.02 amp at 40kV gun supply, and a 15 amp at 15 Vac filament supply will be required. Two 28 GHz

FIGURE 1.0.1 ELMO BUMPY TORUS - PROOF OF PRINCIPLE EXPERIMENT

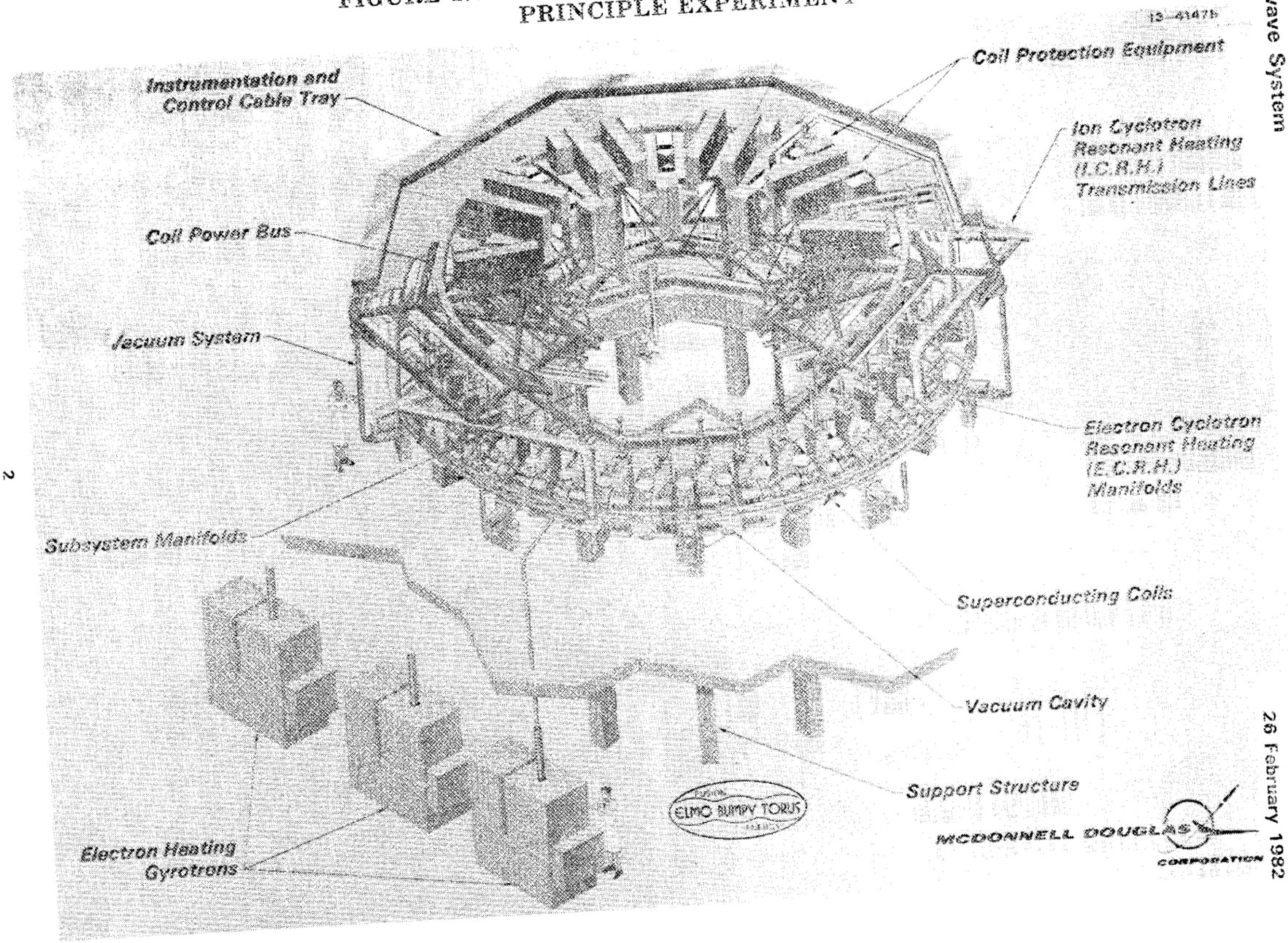

TABLE 1.0.1

SYSTEM ELEMENT	DESIGN CHARACTERISTICS
• 60 GHZ GYROTRON AND RELATED EQUIPMENT	• SIX TUBES PROVIDE 1.2 MW OF CW POWER • GYROTRON R&D HAS GREAT IMPACT ON OTHER SUBSYSTEM DESIGNS • PRODUCTION TUBE DELIVERY IS A SCHEDULE PACING ITEM • GYROTRON FOCUS MAGNET IS SUPERCONDUCTING
• 28 GHZ GYROTRON AND RELATED EQUIPMENT	• R&D PROGRAM HAS BEEN INITIATED • TWO TUBES (400 kW) AND ALL ASSOCIATED EQUIPMENT PROVIDED BY ORNL • TUBES WILL BE RELOCATED FROM EBT-S
• GYROTRON MOUNT	• SUPPORTS, ELECTRICALLY ISOLATES, AND PROVIDES CATHODE COOLING FOR THE GYROTRON • ORNL DESIGN TO BE MODIFIED AS NECESSARY TO ACCOMMODATE THE 60 GHZ TUBE • MOUNT IS MOVEABLE FOR TUBE INSTALLATION AND REMOVAL
• MICROWAVE DISTRIBUTION SYSTEM	• SIMILAR TO THE ORNL REFERENCE BASELINE DESIGN • MICROWAVE DISTRIBUTION R&D PROGRAM NEEDED FOR COMPONENT TESTING AND DESIGN • POWER DIVIDED BY BULK AND ANNULUS TOROIDAL MANIFOLDS • MANIFOLDS AND WAVEGUIDE LINKS LOCATED ON THE UPPER, OUTER CAVITY QUADRANT FOR EASE OF UPGRADING TO A MODE CONTROLLED SYSTEM WITH THROAT LAUNCHING. SYSTEM DOES NOT INTERFERE WITH DIAGNOSTIC PLACEMENT. • MICROWAVE SWITCH DIVERTS GYROTRON POWER TO A DUMMY LOAD • POWER IS UNIFORMLY DISTRIBUTED FROM THE MANIFOLD BY FIXED-SIZE COUPLING IRISES THAT ARE READILY REPLACED • ESTIMATED POWER LOSS IS 30% WITH SIX (6) -60 GHz GYROTRONS OPERATING • CAVITY PORTS AND LIMITER DESIGN ACCOMMODATE UPGRADE TO THROAT LAUNCHED CORE HEATING
• GYROTRON POWER SUPPLY	• EXISTING ORNL POWER SUPPLY IS BASELINED • EACH SUPPLY IS VARIABLE, REGULATED, AND HAS CROWBAR CAPABILITY • OPERATION AND OPTIMIZATION OF EACH TUBE OUTPUT IS INDEPENDENTLY CONTROLLED • SUPPLIES LOCATED ON A FENCED PAD • TWO POWER SUPPLIES ARE PROVIDED BY ORNL

TABLE 1.0.2. GYROTRON SUBSYSTEM INTERFACES

SYSTEM / INTERFACE	MOUNT & SUPPORT EQUIPMENT	MICROWAVE DISTRIBU-TION	GYROTRON POWER SUPPLY	CRYOGENIC	INSTRUMENTATION & CONTROL	REQUIREMENTS
GYROTRON TUBE						
PHYSICAL CHARACTERISTICS	✓	✓				SIZE, WEIGHT, STRUCTURAL SUPPORT
OUTPUT FLANGE		✓				WAVEGUIDE CONNECTION, LOCATION
WINDOW COOLING	✓				✓	WATER, (FC-75), FLOW, Δp, ΔT
OUTPUT GUIDE COOLING	✓				✓	WATER, FLOW, Δp, ΔT
COLLECTOR COOLING	✓				✓	WATER, FLOW, Δp, ΔT
ELECTRON GUN COOLING	✓				✓	OIL, Δp, ΔT
BEAM, ELECTRICAL	✓		✓		✓	I, V, REGULATION, CONTROL, PROTECTION
GUN ANODE, ELECTRICAL	✓		✓		✓	I, V, REGULATION, CONTROL, PROTECTION
FILAMENT, ELECTRICAL	✓		✓		✓	I, V, REGULATION, CONTROL
BODY CURRENT			✓		✓	V, PROTECTION
ARC DETECTOR			✓		✓	CROWBAR TRIGGERING, SYSTEM INTERLOCKS
SUPERCONDUCTING FOCUS MAGNETS						
PHYSICAL CHARACTERISTICS	✓					SIZE, WEIGHT, STRUCTURAL SUPPORT
ELECTRICAL					✓	I, V, QUENCH PROTECTION, INTERLOCKS
LN_2, LH_e				✓	✓	HEAT LEAKS, CONNECTIONS, FLOW, QUALITY
CATHODE MAGNETS						
ELECTRICAL					✓	I, V, REGULATION
COOLING	✓				✓	WATER, FLOW, Δp, ΔT
RF DUMMY LOAD						
COOLING	✓				✓	WATER, FLOW, Δp, ΔT

gyrotron power supplies will be supplied from the EBT-S program, and six (6) new supplies will be required for the procured 60 GHz gyrotrons. In addition, the existing EBT-S 28 GHz gyrotron power supplies will be provided for use with the EBT-S 28 GHz gyrotrons.

The microwave distribution systems (28 and 60 GHz) will use overmoded circular waveguides and waveguide components to distribute the microwave power to multimode manifolds which in turn will couple energy to each vacuum cavity through connecting manifold-to-cavity links. The control of the power distribution with multiple discontinuities will require substantial development. When developed, the distribution system will be required to satisfy the criteria presented herein.

The manifolds and manifolds-to-cavity links placement shall minimize diagnostic interference and facilitate ECRH * improvements and/or upgrades.

The microwave system detailed design will be discussed under the appropriate sections of this report.

1.1 MICROWAVE SYSTEM OVERVIEW

The basic Title I design analysis will be presented in this document based on the following development steps:

- Design Criteria
- Design Analysis
- Supporting Analysis
- Schedule Details

* A table of acronyms is provided as part of this report.

1.2 ORGANIZATION OF THESE VOLUMES

The subject material which has been discussed in this section will be expanded in the remainder of this volume. Each microwave system component and interface Detailed Design Criteria is provided by Section 3. Section 4 contains the Title I Detailed Design Description of the Microwave system and Section 5 provides a synopsis of pertinent Design Analysis used to evaluate design alternatives and size the support systems. Section 6 includes the Schedule Information for the EBT-P microwave system portion of the program and Section 7 lists the reference cited in this text.

2.0 PURPOSE AND SCOPE

The aim of the Title I design has been to perform sufficient analyses and preliminary design trade studies to establish the necessary facility support sizing and insure that adequate envelopes exist for system compatibility. The Title I preliminary design task descriptions are contained in Figure 2.0.1.

The microwave system will proceed through detailed design as shown in Figure 2.0.2. To minimize schedule risk long lead procurements will be initiated during Title II after being subjected to an interim design review and approved by ORNL. For Title II design, the ORNL approved preliminary design drawings and procurement specifications will be detailed; final manufacturing, procurement and quality assurance plans will be prepared; and final safety analyses will be performed. A preliminary microwave system safety analysis impact report for Title I is included in Appendix A.

Much of the detailed design of the microwave tube and the distribution system will be a Task VI (operations) item, performed in the course of designing test articles. MDAC, during Title II, will also prepare the final procurement specification for the ECRH power supplies and submit it to ORNL for approval as a long-lead procurement item. The ORNL gyrotron development specifications will be updated, as required, for use as a procurement specification for the EBT-P 60 GHZ production gyrotrons.

2.1 SYSTEMS INTEGRATION

System integration activities, namely; configuration management, interface control, and maintainability were initiated during Title I engineering. These activities will be continued and expanded upon in detail during Title II engineering.

2.1.1 Configuration Management - The baseline configuration was established during Title I engineering and will be maintained until device installation in the facility is completed. Specific approved design engineering changes, submitted by the Distribution Development Program, will provide the Microwave System configuration flexibility within budget constraints.

Figure 2.0.1 Title I Preliminary Design Task Description

Task Description	Design Documentation
Preliminary System Engineering	System Drawings
Basic Configuration	System Drawings
Cable Routing	System Drawings
Title I Equipment Lists	Equipment Lists
Title I Cost/Schedule Estimates	System Cost Listing/Schedule
System Power Requirements	System Drawings
Ground System Design Features	System Drawings
Facility Requirements	System Drawings
Torus Penetrations	System Drawings

FIGURE 2.0.2 TITLE II DETAILED MICROWAVE SYSTEM DESIGN

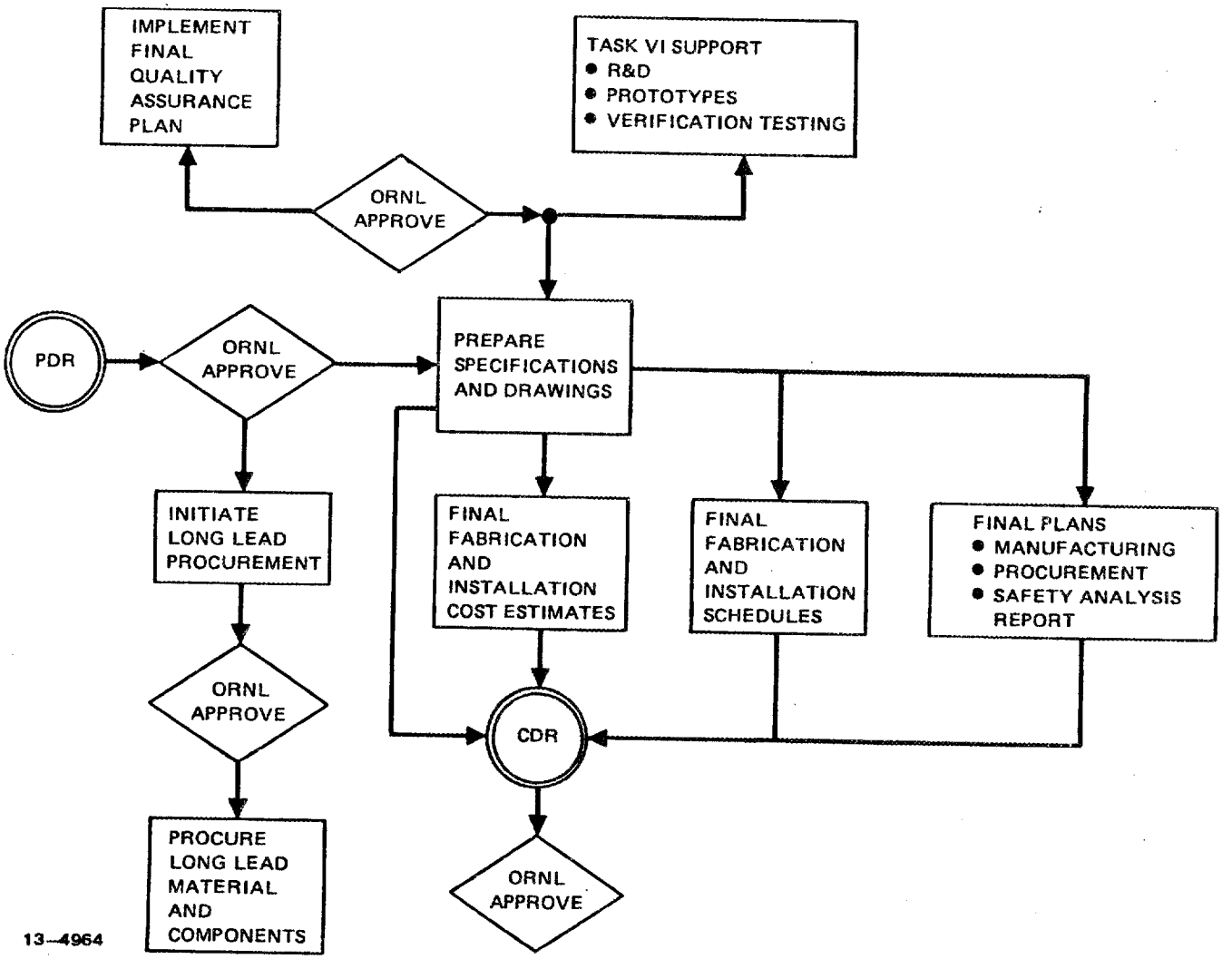

2.1.2 Interface Control - During title I engineering, preliminary interface control was established for the elements described in the Baseline Design Data Book (BDDB). During Title II engineering, these interfaces and their describing documentation, ICD drawings, shall depict detailed physical and functional interface engineering requirements. These drawings are used as design control documents which: (a) establish and maintain compatibility between interfacing items; (b) control interface designs which would affect compatibility with other subsystems; and (c) communicate design decisions and changes to participating activities.

The interface control drawings have been established to delineate, as necessary; (a) configuration and all interface dimensional data applicable to the envelope, mounting and mating of the items; (b) complete interface engineering requirements, such as mechanical, electrical, electronic, hydraulic, pneumatic, optical, etc., which affect the physical or functional characteristics of co-functioning items; and (c) any other characteristics which cannot be changed without affecting system design criteria. Interface drawings are categorized as mechanical, electrical, interconnection, configuration and installation, operational sequence requirements, system switching, etc., as necessary.

2.1.3 Maintainability - An extended maintainability analysis will be conducted throughout Title II engineering which will study and compare maintenance concepts for the EBT-P microwave system to define the scope of maintenance required for each operational scenario. These concepts will address both scheduled and unscheduled maintenance concepts so that the microwave system duty cycle will be compatible with overall machine operating criteria.

2.2 DETAILED ENGINEERING DRAWINGS AND SPECIFICATIONS

Preliminary engineering drawings and specification were generated during Title I and these will be finalized during Title II. A critical item development specification will be developed for the microwave system during Title II. A comprehensive analysis of the final design will be made to ensure that the most cost effective approach has been incorporated.

For a detailed description of the microwave system I & C, see Section 4.2.4 of Volume VI of this report.

2.3 SCHEDULE, MANPOWER AND COST ESTIMATES

To evaluate the program costs for detailed design, schedules necessary for fabrication, installation, and pre-operational testing will be developed. Based on these schedules, and on the detailed design documentation, manpower requirements, material costs, and procurement costs will be forecasted. This data and the plans for procurement, manufacturing, quality assurance, installation and pre-operational testing will serve as the basis for updating cost estimates.

2.4 PROCUREMENTS, MANUFACTURING PLANS AND QA PLAN

During Title II, the preliminary procurement and manufacturing plans initiated during Title I will be updated and a final quality assurance plan will be prepared.

2.5 MICROWAVE SYSTEM INTERFACE DESCRIPTION

The microwave system interface block diagram is shown in Figure 2.5.1. Each of the respective microwave system components is broken down into their own individual block diagrams as follows. The 28 GHz gyrotron and gyrotron mount and support system interface block diagram is shown in Figure 2.5.2, the 60 GHz gyrotron and gyrotron mount and support system interface block diagram is shown in Figure 2.5.3, the microwave distribution interface block diagram is shown in Figure 2.5.4, and the gyrotron power supply interface block diagram is shown in Figure 2.5.5.

2.6 MICROWAVE SYSTEM PRELIMINARY SPECIFICATIONS

The 28 and 60 GHz gyrotron development programs have produced preliminary device specifications which are included in Appendix B and C. The basic electrical parameters are listed in Figure 2.6.1 and 2.6.2 for the 28 and 60 GHz gyrotrons, respectively.

FIGURE 2.5.1 MICROWAVE SYSTEM INTERFACE

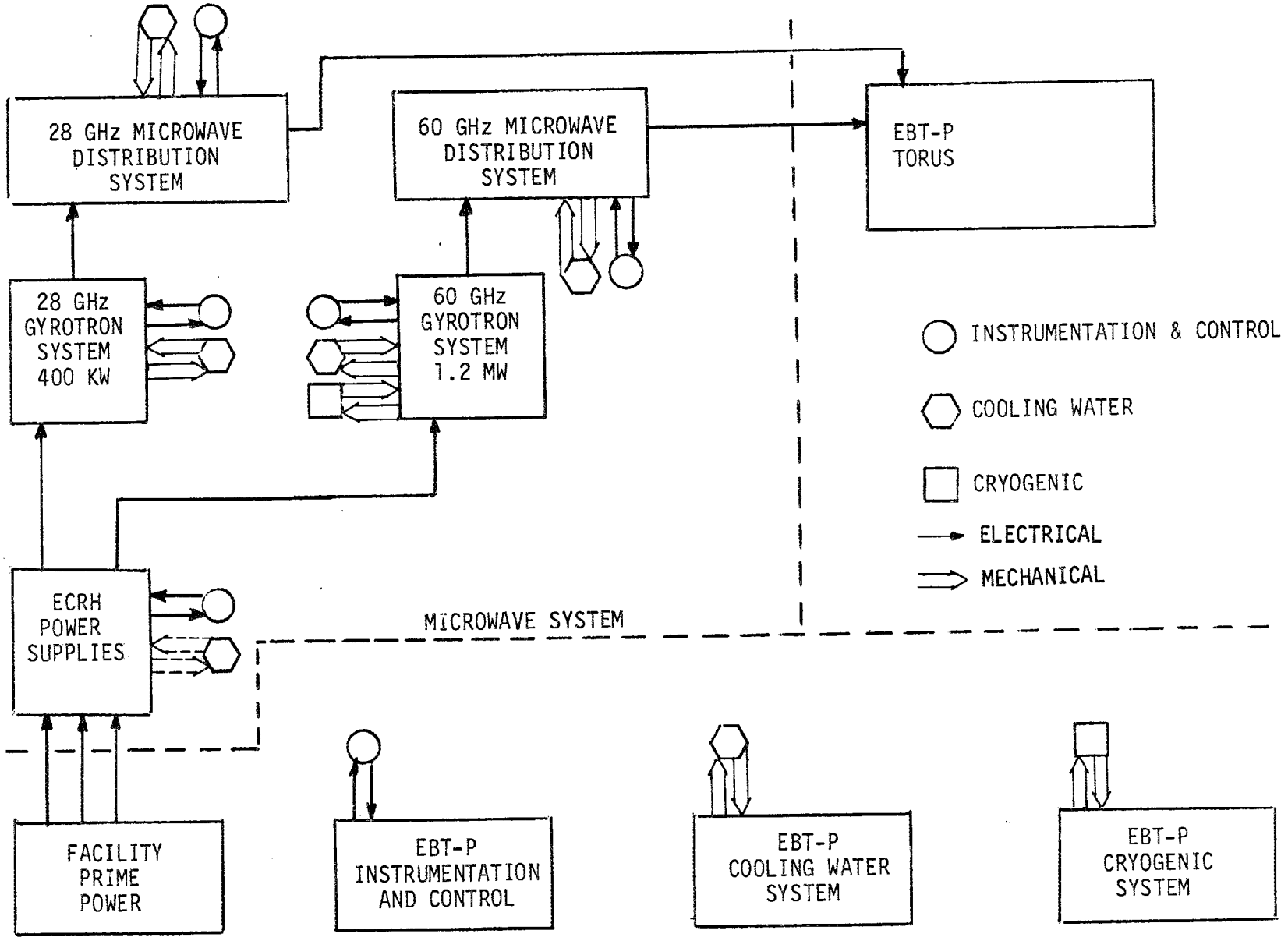

FIGURE 2.5.2 28 GHZ GYROTRON AND GYROTRON MOUNT AND SUPPORT SYSTEM INTERFACE BLOCK DIAGRAM

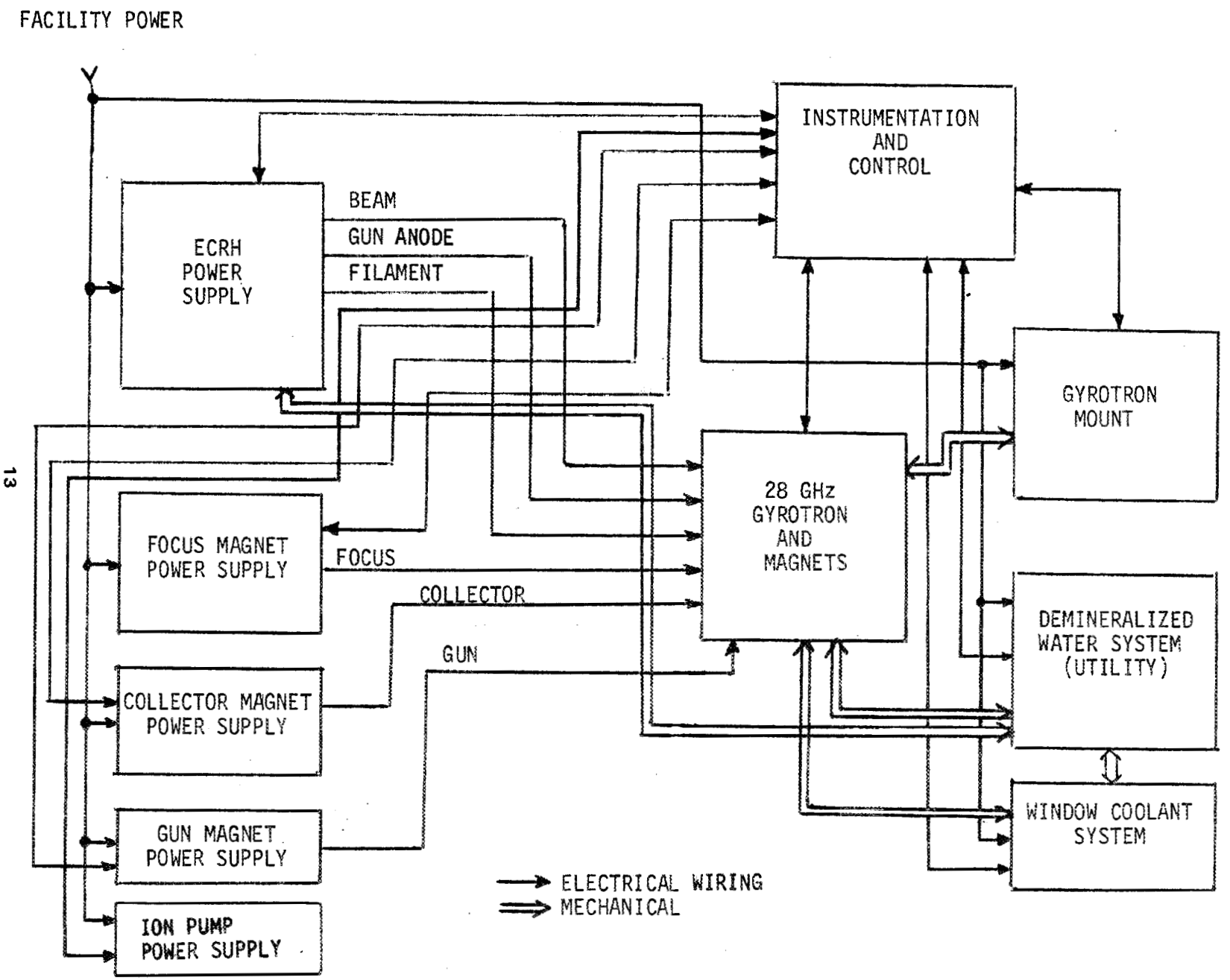

FIGURE 2.5.3 60 GHZ GYROTRON AND GYROTRON MOUNT AND SUPPORT SYSTEM INTERFACE BLOCK DIAGRAM

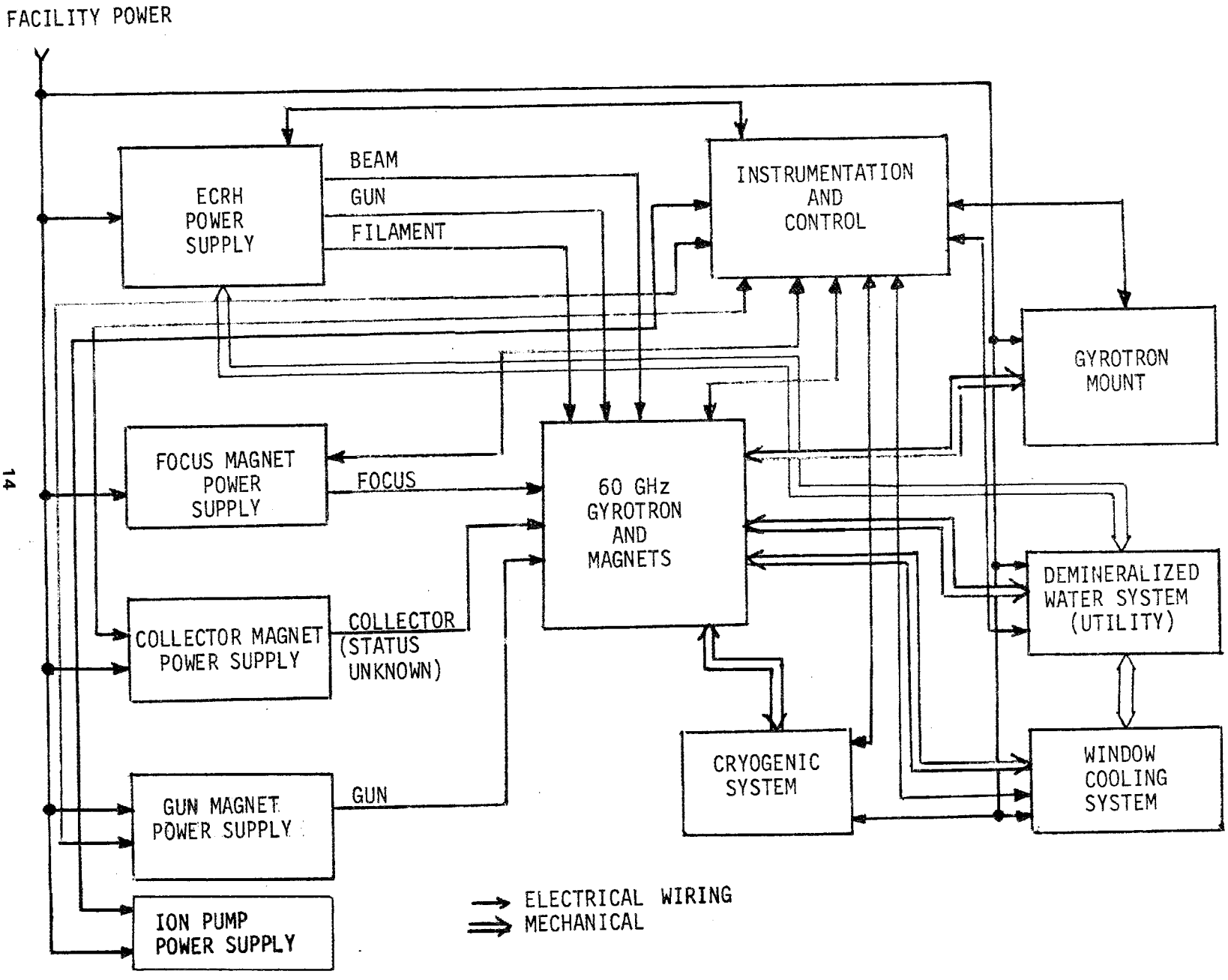

FIGURE 2.5.4 MICROWAVE DISTRIBUTION INTERFACE BLOCK DIAGRAM

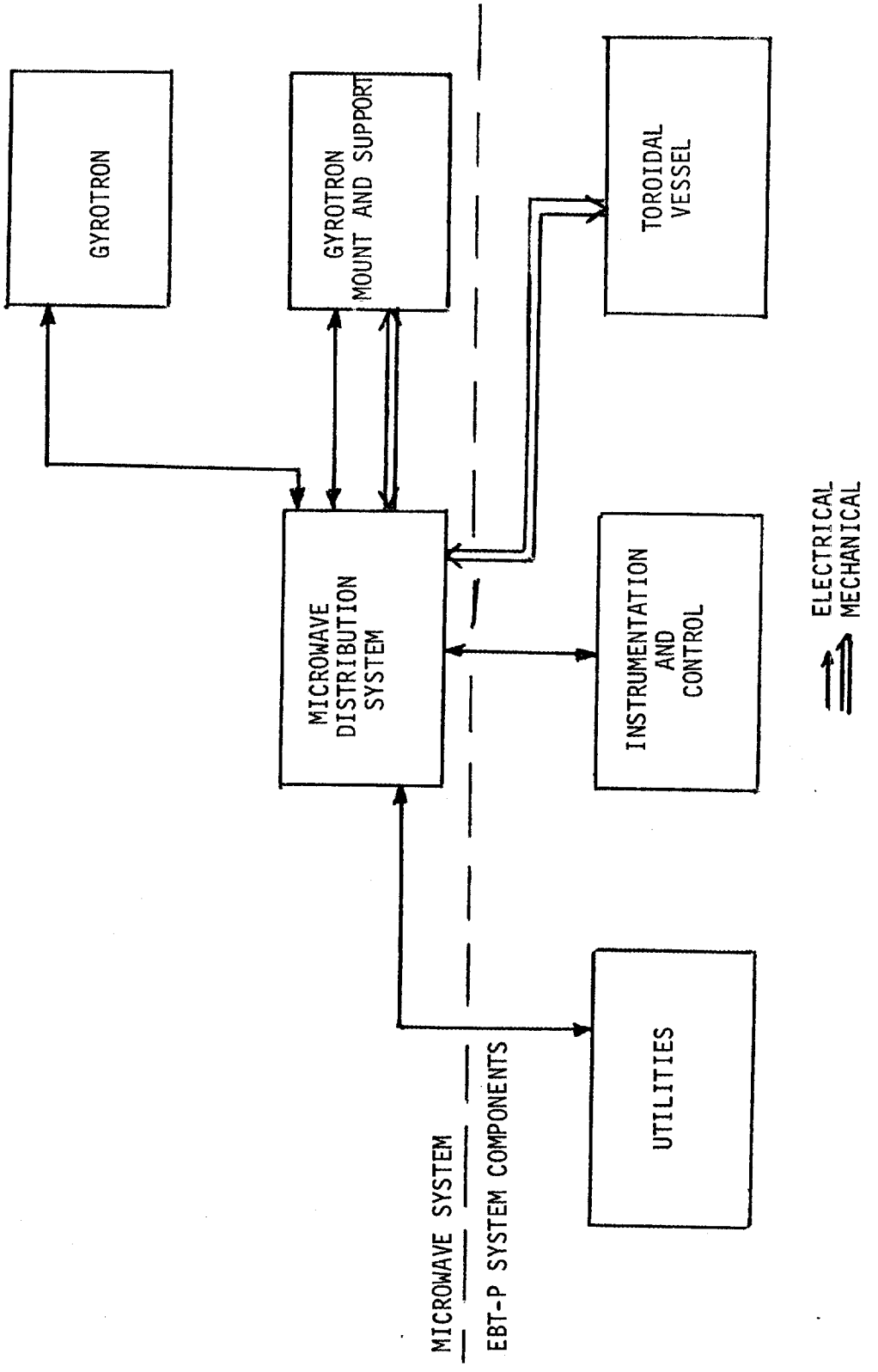

FIGURE 2.5.5 ECRH POWER SUPPLY BLOCK DIAGRAM

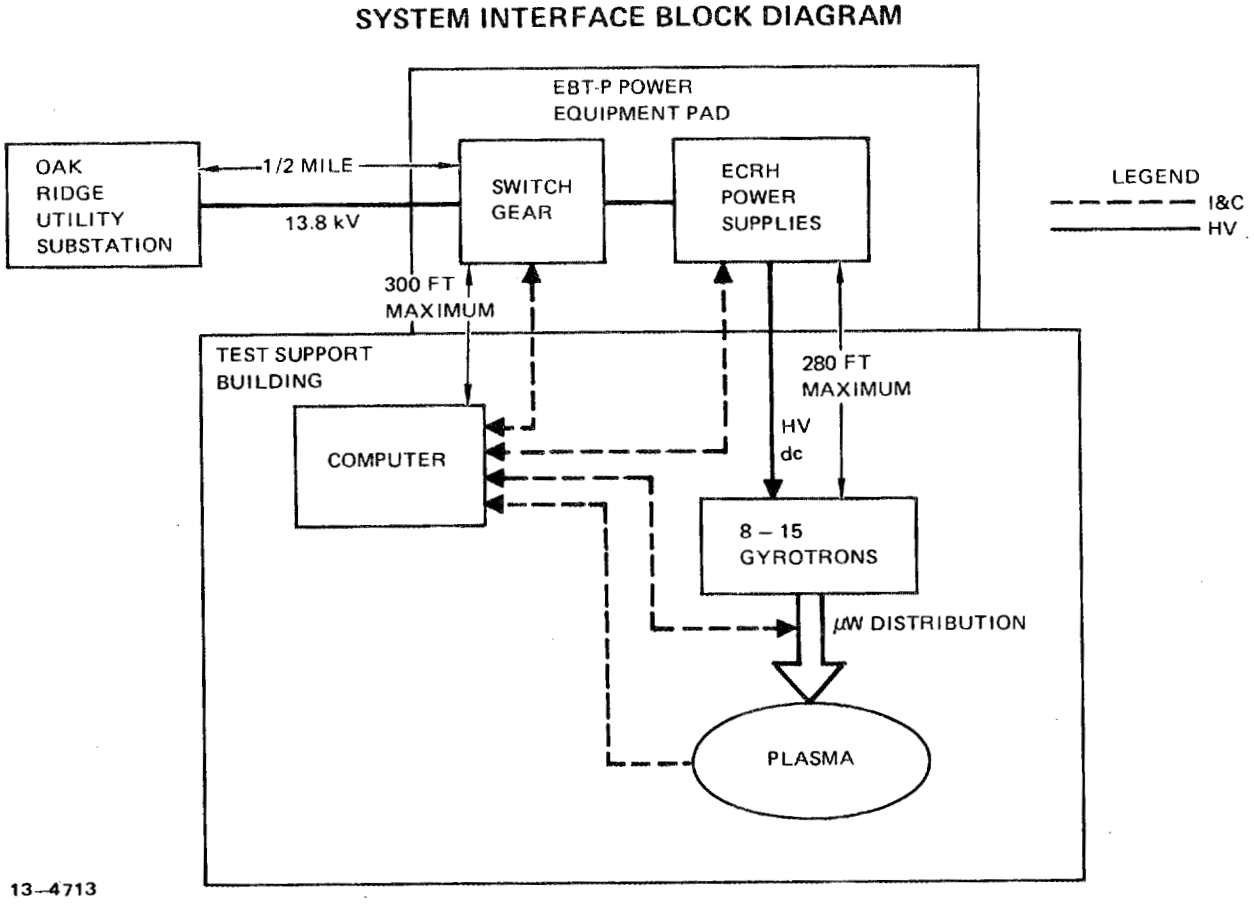

Figure 2.6.1 Preliminary 28 GHZ Gyrotron Electrical Characteristics

*

TENTATIVE SPECIFICATION

TYPE VGA-8000

GYROTRON OSCILLATOR

The VGA-8000 is a cyclotron resonance interaction oscillator. The tube produces 200 kilowatts of CW power at 28 GHz. It is liquid cooled and solenoid focused.

I. ELECTRICAL OPERATING PARAMETERS

Electrical Operating Parameters	Minimum	Maximum	Typical
Beam Voltage	70	90	80 kV
Beam Current	6	10	8 A
Collector Dissipation	—	700	640 kW
Gun Control Anode (with respect to cathode)	20	40	30 kV
Heater Voltage (AC)	6	13	9 V
Heater Current	4	8	6 A
Heater Power	37	96	64 W
Body Current	—	80	20 mA
Gun Anode Current	—	10 mA	1.0 mA
Power Output	200	—	210 kW
Efficiency	30%	50%	40%

II. POWER OUTPUT SENSITIVITIES

Gun Control Anode Voltage	0.6 dB/%
Main Magnet Current	1.5 dB/%
Gun Magnet Current	0.3 dB/%
Heater Voltage	0.6 dB/%
Beam Voltage	0.6 dB/%

Figure 2.6.2 Preliminary 60 GHZ Gyrotron Electrical Characteristics

*

TENTATIVE SPECIFICATION

TYPE VGA-8006

GYROTRON OSCILLATOR

The VGA-8006 is a cyclotron resonance interaction oscillator. The tube produces 200 kilowatts of CW power at 60 GHz. It is liquid cooled and solenoid focused.

I. ELECTRICAL OPERATING PARAMETERS

Electrical Operating Parameters	Minimum	Maximum	Typical
Beam Voltage	70	90	80 kV
Beam Current	4	10	8 A
Collector Dissipation	—	700	640 kW
Gun Control Anode (with respect to cathode)	15	30	20 kV
Heater Voltage (AC)	6	13	12 V
Heater Current	1	8	2 A
Heater Power	20	96	25 W
Body Current	—	80	20 mA
Gun Anode Current	—	10 mA	1.0 mA
Power Output	200	—	210 kW
Efficiency	30%	50%	40%

Figure 2.6.2 Continued

II. POWER OUTPUT SENSITIVITIES

	Max.
Gun Control Anode Voltage	0.6 dB/%
Main Magnet Current	1.5 dB/%
Gun Magnet Current	0.3 dB/%
Heater Voltage	0.6 dB/%
Beam Voltage	0.6 dB/%

*UCC Provided Data for Title I System Analysis

3.0 DESIGN CRITERIA

This section describes the design criteria established during Title I which is proposed to be used for the EBT-P microwave system. Three groups of criteria have been specified which are:

- Basic RFP design criteria requirements
- Title I design criteria guidelines
- ECRH heating physics design criteria guidelines.

Additional interface design criteria which are basically design implementation criteria.

3.1 RFP DESIGN CRITERIA REQUIREMENTS

These requirements are amended by Title I directives are as follows:

3.1.1 Device Systems General Criteria

a. Basic Device

An ECRH system shall be initially provided to supply 1200 kW (CW) of microwave power at 60 GHz and 400 kW (CW) at 28 GHz measured at the output of the tube.

b. Upgrade Accommodations

The baseline EBT-P design shall be compatible with the following future upgrade options:

1. Increase of ECRH resonant frequency to 90 GHz and installation of additional ECRH power.

2. the use of separate ECRH launching positions, in the main cavity to heat predominantly the ring and in the coil throat to heat the toroidal core plasma.

3. Design of EBT-P shall have sufficient flexibility so as not to preclude installation of future upgrades such as direct ion heating, particle control (divertor), and alternate fueling methods to the extent practical.

3.1.2 Electron Cyclotron Resonant Heating (ECRH) Systems

a. Gyrotron System

Six gyrotron systems shall be provided, each supplying microwave power of 200 kW, CW, at a nominal frequency of 60 GHz for bulk heating of the plasma; and two 28-GHz gyrotron systems shall be provided, each supplying microwave power of 200 kW, CW, for profile heating. The gyrotron system includes the following major components directly related to the gyrotron tubes: microwave tube itself, gyrotron magnet and associated supply, power supply for the appendage ion pump, arc detectors, microwave dummy loads, distribution system window, output monitor, and miscellaneous wire and cabling. The microwave dummy load shall be capable of absorbing the full CW output power of each tube for test and calibration purposes; means for readily transferring each individual tube output between the torus and its dummy load shall be included.

Each 60-GHz gyrotron system shall include a microwave tube, superconducting magnet, each nominally rated at 1 volt and 200 amps, two main target supplies, a gun magnet supply, two steering magnet supplies, and two appendage ion pump power supply nominally rated at 3.2 kVdc and 50 mA. Helium loads for this magnet are estimated at 5 watts/magnet at 4.4 K and 1 liter/hr at 1 atm per magnet. Other components shall be furnished as required to accommodate a fully operational 60-GHz gyrotron system.

Each 28-GHz gyrotron system shall include a microwave tube, a room temperature magnet consisting of four sections with a 10 V and 600 A power supply for each section, and an appendage ion pump supply nominally rated at 3.2 kVdc and 50 mA.

b. Gyrotron Mount and Support

Each tube shall be rigidly mounted in a manner that facilitates installation and removal, and provides for electrical isolation of the high voltage electron gun. The tube/mounting structure combination shall be located such that it does not interfere with diagnostic access to the torus. All heat removal systems shall be designed such that each tube may be operated individually (for tube testing purposes) or in combination with the other tubes when providing power to the EBT-P device. A water cooling system shall also be provided which will meet the tube and auxiliary systems cooling requirements (such as heat transfer systems for intermediate coolants) as their need develops.

All necessary 28-GHz gyrotron mounts and supports are existing and available for use in the EBT-P 28-GHz system.

c. Microwave Distribution System

Each ECRH power distribution system shall divide the total power output from all tubes uniformly among all torus cavities and shall provide for electrical isolation between each gyrotron. The design shall maximize the efficiency of the distribution system, with a design goal of 70%.

d. Gyrotron Power Supplies

Power supplies to power the gyrotron tubes shall be compatible in all respects with gyrotron operation. Each high-voltage dc supply shall be variable, regulated, and equipped with a fast crowbar or other means to divert energy in the event of a fault. Capability for monitoring body current and protection from excessive body current shall be included for each tube. Each gyrotron will require beam power nominally at 90 kVdc and 10 A, gun anode power nominally at 40 kVdc and 0.02 and heater power at 15 Vac and 15 A. Power supplies providing the appropriate voltage and current will be available from EBT-S for the 28-GHz tubes.

Operation of each tube shall be independent from operation of all others for control and optimization of the microwave output. Capability shall be included for adjustment and optimization of any or all individual tube operating parameters independently of all others.

3.2 MICROWAVE SYSTEM

Gyrotron Subsystem

- Preliminary interface requirements for gyrotron subsystem have been established in accordance with Figure 3.2.1.
- The six 60 GHz and the two 28 GHz gyrotrons will be located in the lower level of the torus enclosure.
- The tubes will be evenly located around the torus to promote even microwave power distribution.
- The tubes will be positioned near the walls to simplify routing of the support system lines and to prevent the waveguide penetration links from interfering with diagnostic or personnel access to the device.
- A water flow control assembly shall be located beside each tube; however, both the magnet supplies and the gun regulator cabinet for the gyrotron power supply will be located outside the biological shield.
- The proposed layout will provide space for adding more gyrotrons in upgrades.
- The two 28 GHz gyrotron systems used on EBT-S will be moved and installed on EBT-P.
- The two EBT-S High Voltage Power Supplies will be weather proofed prior to delivery to the EBT-P project.
- The two EBT-S High Voltage Power Supplies will be made compatible with the EBT-P I&C system, and the outdoor environment.

Gyrotron Mount and Support Equipment

- The gyrotron mount and support equipment subsystem includes the gyrotron mount, the water flow control assembly, and the auxillary magnet power supplies.
- The mounts will be recessed in the lower floor, beneath and outside the torus, five feet to allow gyrotron removal and replacement.

FIGURE 3.2.1. GYROTRON SUBSYSTEM INTERFACES

SYSTEM / INTERFACE	MOUNT & SUPPORT EQUIPMENT	MICROWAVE DISTRIBU-TION	GYROTRON POWER SUPPLY	CRYOGENIC	INSTRUMENTATION & CONTROL	REQUIREMENTS
GYROTRON TUBE						
PHYSICAL CHARACTERISTICS	✓	✓				SIZE, WEIGHT, STRUCTURAL SUPPORT
OUTPUT FLANGE		✓				WAVEGUIDE CONNECTION, LOCATION
WINDOW COOLING	✓				✓	WATER, (FC-75), FLOW, Δp, ΔT
OUTPUT GUIDE COOLING	✓				✓	WATER, FLOW, Δp, ΔT
COLLECTOR COOLING	✓				✓	WATER, FLOW, Δp, ΔT
ELECTRON GUN COOLING	✓				✓	OIL, Δp, ΔT
BEAM, ELECTRICAL	✓		✓		✓	I, V, REGULATION, CONTROL, PROTECTION
GUN ANODE, ELECTRICAL	✓		✓		✓	I, V, REGULATION, CONTROL, PROTECTION
FILAMENT, ELECTRICAL	✓		✓		✓	I, V, REGULATION, CONTROL
BODY CURRENT			✓		✓	V, PROTECTION
ARC DETECTOR			✓		✓	CROWBAR TRIGGERING, SYSTEM INTERLOCKS
SUPERCONDUCTING FOCUS MAGNETS						(60 GHz ONLY)
PHYSICAL CHARACTERISTICS	✓					SIZE, WEIGHT, STRUCTURAL SUPPORT
ELECTRICAL					✓	I, V, QUENCH PROTECTION, INTERLOCKS
LN_2, LH_e				✓	✓	HEAT LEAKS, CONNECTIONS, FLOW, QUALITY
CATHODE MAGNETS						
ELECTRICAL					✓	I, V, REGULATION
COOLING	✓				✓	WATER, FLOW, Δp, ΔT
RF DUMMY LOAD						
COOLING	✓				✓	WATER, FLOW, Δp, ΔT

- The oil-filled gyrotron mount shall support the gyrotron and magnets and electrically isolate the high voltage cathode and gun anode from ground.
- A small submersible pump shall circulate oil through coolant tubes in the electron gun.
- A water flow control assembly shall be provided for each gyrotron. Inlet and outlet headers shall be fed from water distribution manifolds routed in recessed trenches. Appropriate boost pumps and regulating devices will be used to establish the required flow rates and limit the maximum pressures to specified values. Each flow path will include differential temperature sensors and flow rate indicators to activate low flow alarms and to provide data for making system calorimeter measurements.
- When tube operation is not desired, means will be incorporated to enable any number of tubes to be operated independently for test purposes.
- A close-loop FC-75 cooling system will be required for the gyrotron window cooling. The proposed system will be similar to the present EBT-S design.

Microwave Distribution

- The distribution system shall efficiently and uniformly divide bulk and annulus power to each cavity regardless of mode or polarization.
- The initial design will not incorporate means to control the polarization of the incident microwaves into the cavities.
- The basic transmission line will use 2-1/2" (6.35 cm) ID circular waveguide to transmit the gyrotron output power to the distribution assembly. In addition, the distribution-to-cavity links will use 2-1/2" ID circular waveguide. The link will incorporate optical isolation (bend) to protect a series microwave window. Also, the link will include some means of regulating the powerflow to insure uniform power distribution to individual cavities.
- The transmission components required to support the distribution system besides those mentioned include mode filters, a microwave switch, arc detectors, microwave bends, circular waveguide flanges, and a microwave distribution manifold.
- Preliminary estimates of the power operating range for the EBT-P device define the minimum to be 15 kW and the maximum to be 1.6 MW at machine startup.

- The present distribution baseline design concept will use a segmented manifold in conjunction with adjustable irises located in the manifold-to-cavity links to insure even power distribution.

Gyrotron Power Supply

- Power to each tube will be independently controlled, variable, regulated, and have crowbar protection and be isolated from ground.
- Control capability will allow the adjustment and optimization of all tube operating parameters independently of each other or other tubes.
- Each supply's fused disconnect, primary voltage regulator, and vacuum interrupter will be located on the equipment pad in a secure fenced area. Also included in this area will be each supply's beam and gun transformer/rectifier tanks, 480 Vac supply, and the 480 Vac switchgear.
- The gun regulator/crowbar cabinets will be positioned outside of the biological shield.
- Control and monitoring panels will be located in the control room.

3.3 EBT-P MICROWAVE SUPPLEMENTAL DESIGN REQUIREMENTS SPECIFICATIONS.

Numerous design specifications and standards are listed as design critiera in the ECRH power supply specification. Updated procurement specifications for the 60 GHZ gyrotrons will reference design specifications and standards.

3.4 ENVIRONMENTAL DESIGN CRITERIA

All operating microwave system components will be required to work when exposed to the torus environment in terms of:

a. Radiation
b. Air Temperature
c. Water Maximum Inlet Temperature
d. Humidity

4.0 DESIGN DESCRIPTION

The microwave system consists of four (4) major components which are (1) the 28 and 60 GHz gyrotrons, (2) the gyrotron mount and support systems, (3) the microwave distribution system, and (4) the gyrotron power supplies. The microwave system block diagram is shown in Figure 4.0.1

4.1 GYROTRON SUBSYSTEM

The gyrotron subsystem includes the 28 and 60 GHz gyrotrons, the focus magnets, auxilliary magnets, ion pump supplies, and those additional microwave components which will be required for operating the gyrotrons into a water load. Gyrotron development has progressed to the point where an output power greater than 200 kilowatts (cw) has been demonstrated for the 28 GHz gyrotron and high pulse power has been obtained at 60 GHz.

The proposed location of the EBT-P gyrotrons is in the lower torus enclosure level. The proposed gyrotron layout is described by Figure 4.1.1. Additional detail is provided by the Title I gyrotron drawings which are included in the reference section of this report. These drawings have been updated to include Varian's comments. In addition, a set of Varian preliminary drawings have been included for reference.

Title I engineering has addressed the gyrotron interfaces associated with the instrumentation and control subsystem, the facilities subsystem interface, and the interface with other specific components at the microwave system. Two design support analysis were made during Title I relative to gyrotron location within the torus enclosure. These analyses are contained within section 5 of this report. The first analysis investigates the requirement for gyrotron-to-gyrotron separation based on magnetic gyrotron interaction due to individual gyrotron magnetic fields. The analysis shows that 28 GHz thru 90 GHz gyrotron-to-gyrotron magnetic interference is tolerable. This analysis will be updated during Title II to obtain increased accuracy and more comprehensive data. The fields produced by the machine magnets and the plasma currents will not produce significant magnetic interference for the gyrotron environment.

The second analysis was a materials investigation conducted by MDAC Materials and Process personnel, in conjunction with Varian tube development people, to insure that materi-

FIGURE 4.0.1 MICROWAVE SYSTEM BLOCK DIAGRAM

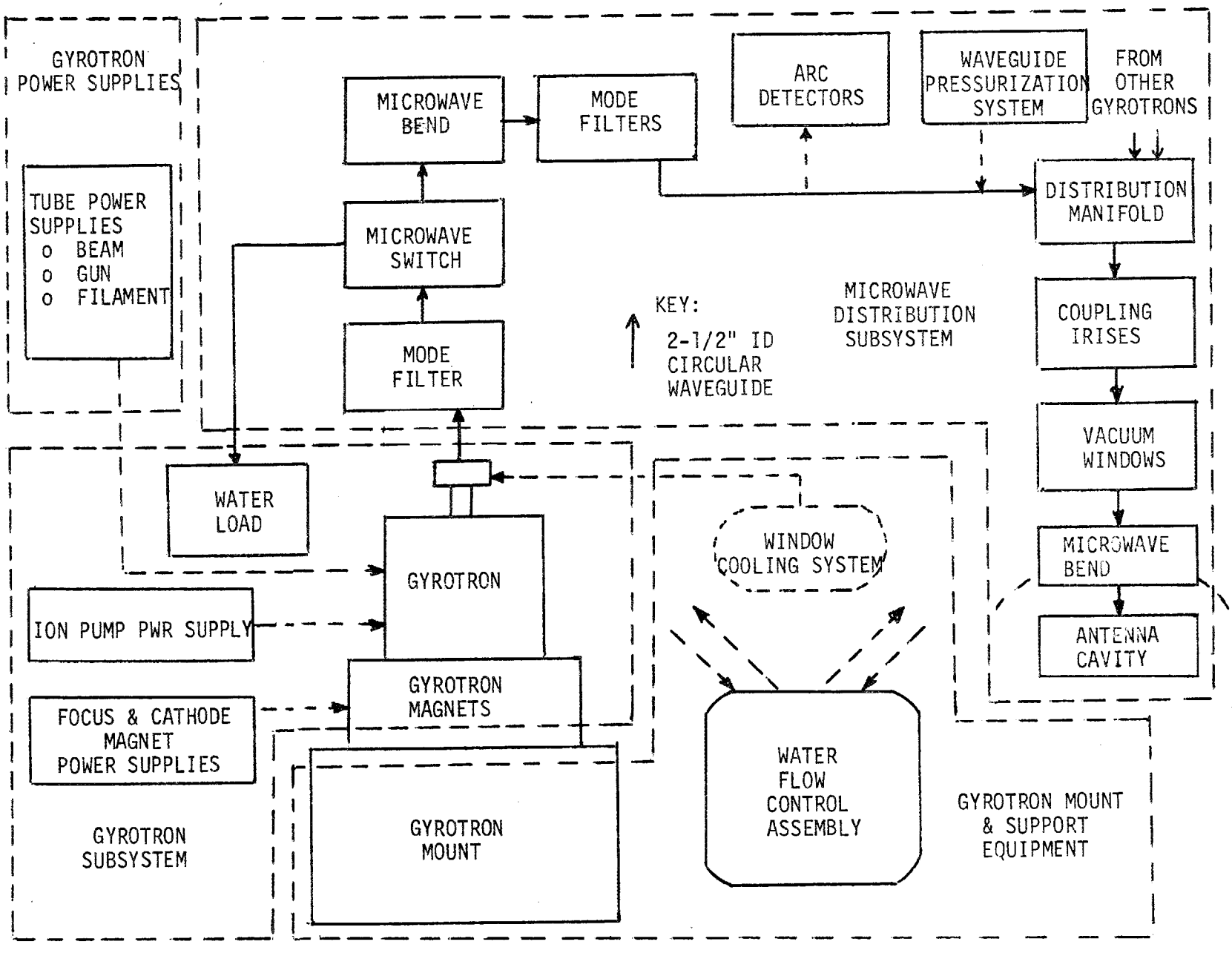

FIGURE 4.1.1

PROPOSED GYROTRON LAYOUT

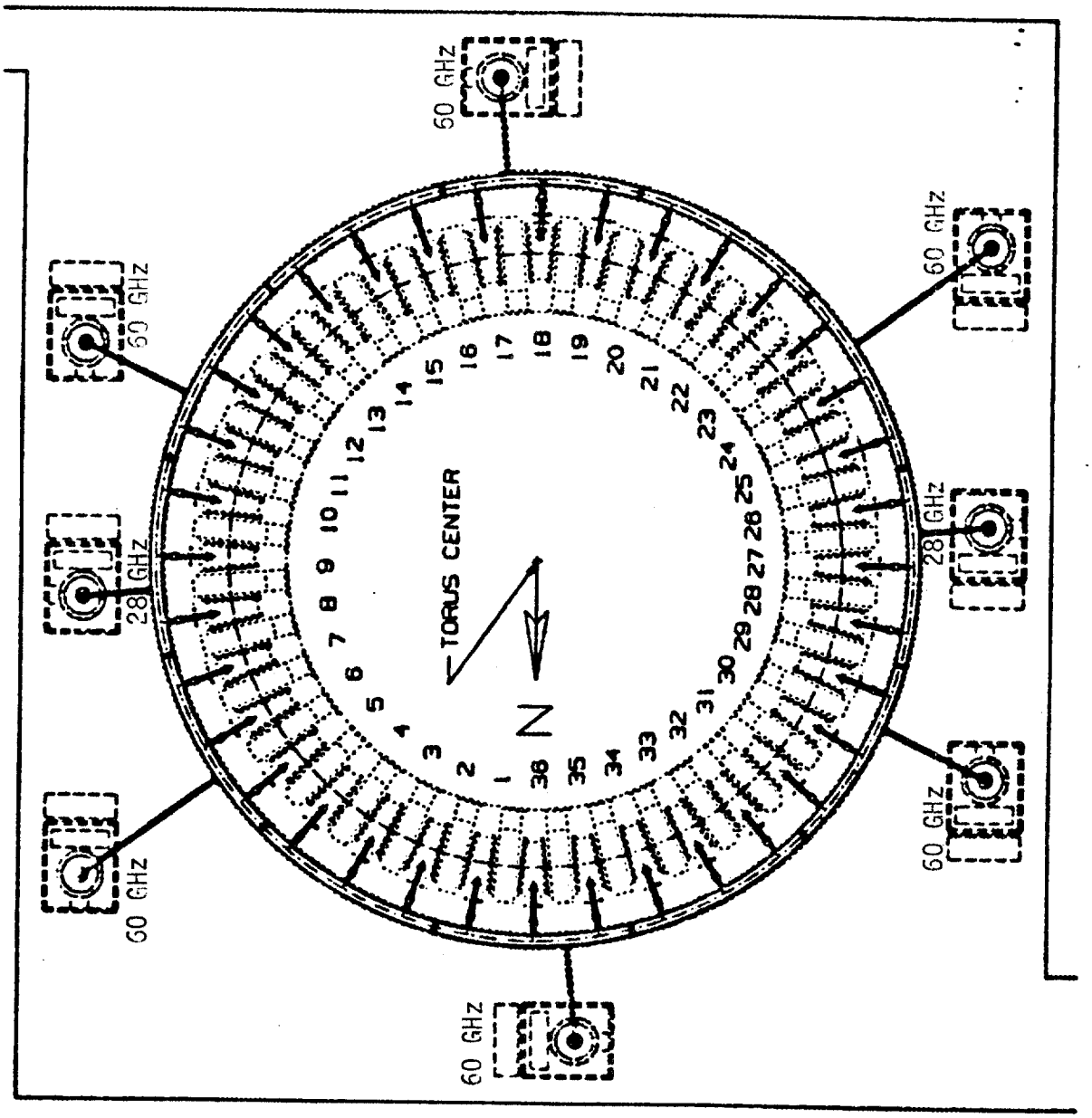

als used for gyrotron fabrication would not be degraded by X-ray levels present at the gyrotron location within the torus enclosure.

The 60 GHz gyrotron will be similar in form to the 28 GHz gyrotron except a superconducting focus magnet will be used, and the tube dimensions will be different. Again the latest estimates, for the gyrotrons, have been supplied to MDAC St. Louis by Varian.

A gyrotron setup, conditioning, and operating procedure was established during Title 1. The specific details are included in Appendix F.

4.2 GYROTRON MOUNT AND SUPPORT SYSTEM

The gyrotron mount and support subsystem, must mechanically support the gyrotron tubes, electrically isolate the high voltage cathode and gun anode from ground, provide the required magnet input power for the gyrotron magnets, and provide the required cooling for the gyrotron and the gyrotron focus magnet. Two 28 GHz gyrotron mounts will be supplied GFE (relocated from EBT-S). In addition, the gyrotron magnets and power supplies will be provided GFE from EBT-S. The ORNL existing gyrotron mount design will be modified as required to accommodate the 60 GHz gyrotron. It is expected that only minor design changes will be necessary to accomodate the 60 GHz gyrotron.

A water flow control assembly will be required for each gyrotron. The preliminary ECRH heating and cooling requirements are addressed in Appendix D. Inlet and outlet headers for the 60 GHz assemblies are fed from water distribution manifolds routed along the trench in the lower torus level. The inlet headers in conjunctions with individual gyrotron pressure regulators will be utilized to satisfy the input cooling flow and pressure requirements estimated in the preliminary 28 and 60 GHz gyrotron specifications which are enclosed in Appendix B and C. Each flow path will include pressure and flow control valves, differential temperature sensors, and low flow alarms.

A heat-exchanger cooling system using FC-75 will be required to cool the gyrotron output window.

The gyrotron mount and support system will include an oil filled mount base assembly to electrically isolate the high voltages distributed to the gyrotron gun and cathode as well as to cool the electron gun. A small submersible oil pump will be required to circulate oil through the electron gun coolant tubes.

In addition to the instrumentation and control interface for the cooling system, electronic interfacing will be required to monitor gyrotron beam voltage, gun anode voltage, beam current, gun anode current, heater voltage, heater current, and body current at the mount with all interface signals isolated from the gyrotron supplies.

4.3 MICROWAVE DISTRIBUTION

The principal baseline design objective (see Figure 4.3.1) for the distribution system, is to uniformily divide 28 GHz and 60 GHz microwave power to each cavity regardless of mode or polarization. The microwave power must be evenly distributed because the hot electron ring required in each cavity, for plasma stabilization, is formed by microwave heating. In addition, the high plasma absorption rates makes it necessary to feed each cavity individually as the microwave coupling from one cavity to the next is minimal. The design and control of the large number of uniform power splits at high power is the most difficult microwave task required for initial device operation.

To supplement the technology, which will be required for the microwave distribution system detailed design, a separately funded R&D program has been established. The design of the microwave distribution system is closely tied to the progress of the R&D program.

The proposed baseline microwave distribution system for both 28 and 60 GHz system is very similar to that currently used on EBT-S. Distribution changes are anticipated because of uncertainties in trying to scale EBT-S microwave results to EBT-P. Figure 4.3.2 is a re-

Figure 4.3.1 Microwave Distribution System

- The Microwave Distribution System Will Be Similar To The ORNL Reference Design. However specific design alterations will be required to accomodate multiple gyrotrons, provide switching the gyrotron output to a water load and to facilitate additional window locations.
- A Microwave R&D Program Is Required For System and Component Development
- The Manifold-To-Waveguide Link Is Located On The Upper, Outer Cavity Quadrant To Satisfy Baseline and Upgrade Requirements
- Manifolds Will Provide Gyrotron Isolation
- A Proposed Microwave Switch Will Allow In-Line Operation For Gyrotron Power Monitoring
- The System Goal Is For Uniform Microwave Power Distribution With 70% Distribution Efficiency From The Gyrotron To The Torus Sector
- The Cavity Design Does Not Preclude Adding Throat Launching Upgrades. NOTE: A Modified Entry Port Will Be Required To Provide This Capability.

FIGURE 4.3.2a 28 GHZ MICROWAVE DISTRIBUTION SCHEMATIC

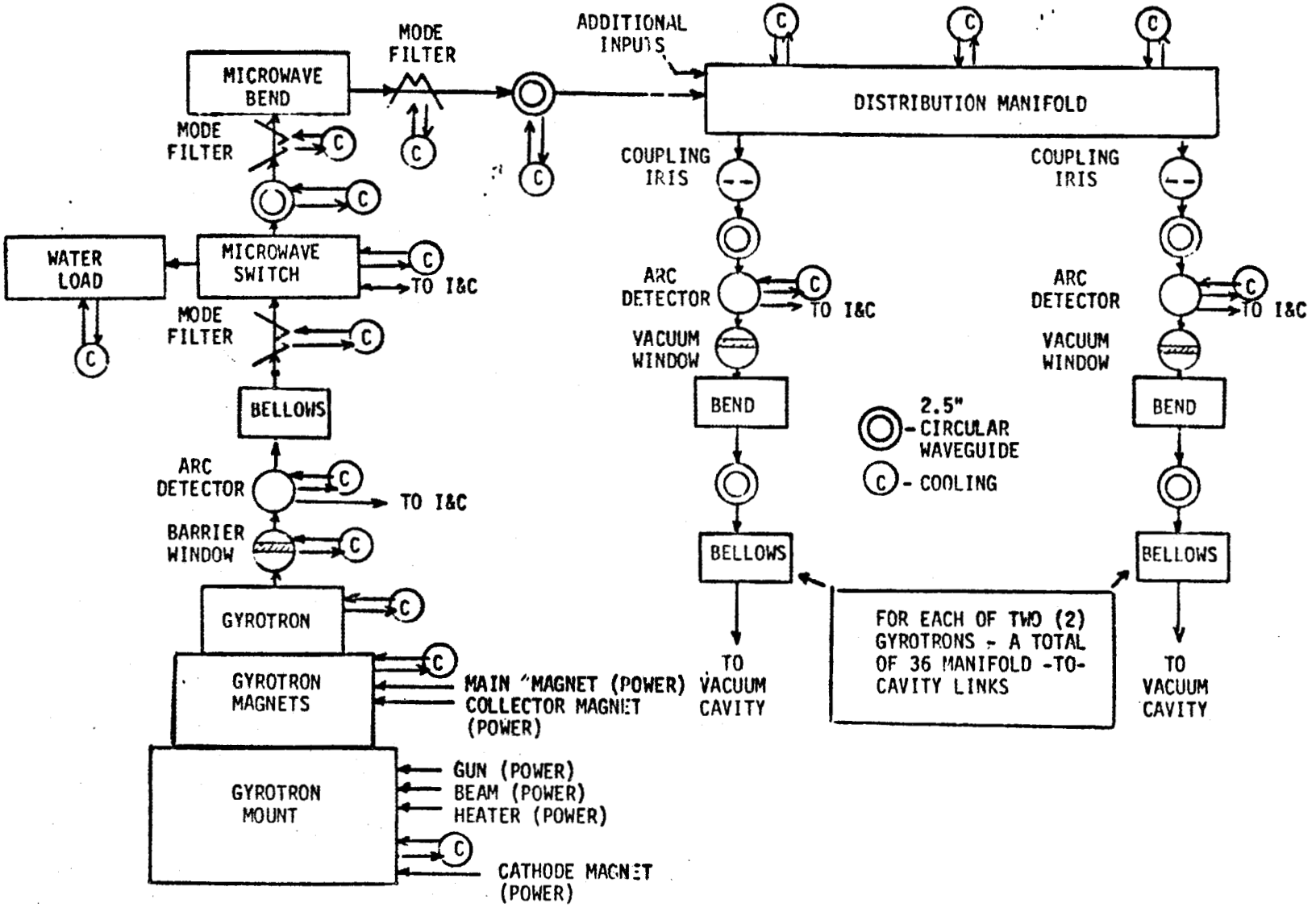

FIGURE 4.3.2b 60 GHZ MICROWAVE DISTRIBUTION SCHEMATIC

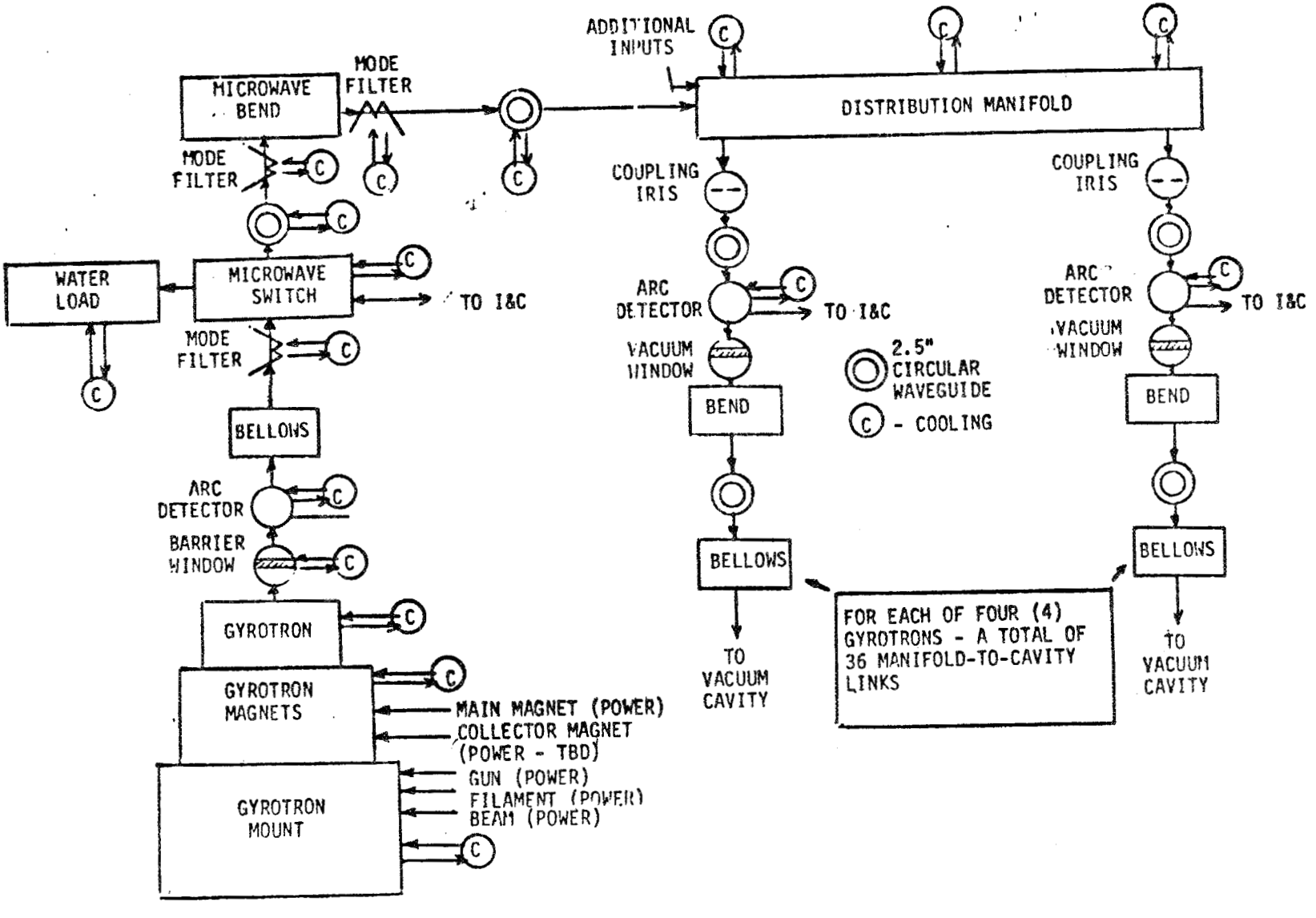

presentative distribution system schematic of the distribution system for the two distribution systems. The design criteria for the distribution system requires a 70% distribution efficiency from the gyrotron to the torus sector.

The transmission subsystem is divided into two basic parts. The first part links the gyrotron output to the distribution manifold. The gyrotron output waveguide will have a 2.5 inch inside diameter. This dimension, for the baseline design, will remain constant for all interconnecting circular waveguide to the manifold. The basic gyrotron output power is in the low loss circular electric modes. This section of the distribution system will use mode filters to damp out spurious resonances which could produce abnormally high power dissipations resulting in arcing or improper gyrotron operation.

Preliminary calculations have been made to provide heat load estimates to establish initial sizing requirements for facility water and air cooling capacities and prime water distribution manifolds. The results of this analysis is contained in Appendix D of this report. In addition, analyses were made for gyrotron-to-gyrotron magnetic field interactions, and gyrotron material survivability in the EBT-P radiation environment. The results of each analysis is included in Section 5 of this report.

Also required as part of the first distribution section of the distribution system, will be arc detectors which will be compatible with the inside 2.5 inch diameter waveguide. Optical detection and coupling will be the prime mechanism utilized in the arc detector design, however, acoustical detection has been proposed to facilitate maintenance. A remotely actuated microwave switch would be desirable for diverting the gyrotron output power directly to a matched water load for tube conditioning and start up. A system preliminary start up and turn off control procedure has been generated based on EBT-S operations. This procedure is included in the appendices of this report.

The second part of the distribution assembly divides and distributes the gyrotron's power to the individual cavity section's. The principal component in this section is a distribution manifold that will uniformly divide the power to identical oversized waveguides which transmit the power to the cavities. The loss of mode purity in the manifold distribution system makes any type of analysis very difficult and the system design parameters will be derived by a combination of analysis measurements made as part of the microwave distri-

bution R&D program. To insure a balanced distribution, coupling irises must be used to match the power output from each manifold port.

Power is distributed, in the proposed baseline design, from the manifold to each cavity by a waveguide link which includes a coupling iris, a vacuum window, and a bend with interconnecting circular waveguide sections. Power balance is accomplished by sizing the coupling iris. The bend is required to prevent the coating of the vacuum window by sputtered material.

Future design modifications and upgrades of the distribution components are necessary to develop the mode controlled distribution system for polarization and coupling experiments. The baseline vacuum cavity has been designed to allow a waveguide penetration between the magnet wall and the plasma limiter, so that experiments requiring the launching of waves from the magnet throat could be performed once the mode controlled expertise is available.

4.4 ECRH POWER SUPPLY SUBSYSTEM

The Gyrotron power supply configuration is shown in Figure 4.4.1 and its interface with other equipment is shown in Figure 4.4.2. The general building arrangement is presented in Figure 4.4.3. Two 500 kcmil-per-phase input power copper cables shall be routed around the power supply pad in the shape of a "U" (see Figure 4.4.4) and will provide 3 phase (ϕ) 13.8 kV wye connected power for the ECRH power supply pad. The equipment on the pad shall consist of several modularized power components providing power for six 60 GHz continuous wave (CW) gyrotron tubes and two 28 GHz (CW) gyrotron tubes. The ECRH power supply equipment, including the regulators and crowbars, shall be designed and manufactured for an outdoor weatherproof and weathertight installation. A preliminary ECRH Power Supply manufacturing and acceptance test plan was formulated during title I and is included in Appendix E.

FIGURE 4.4.1 ECRH POWER SUPPLY BLOCK DIAGRAM

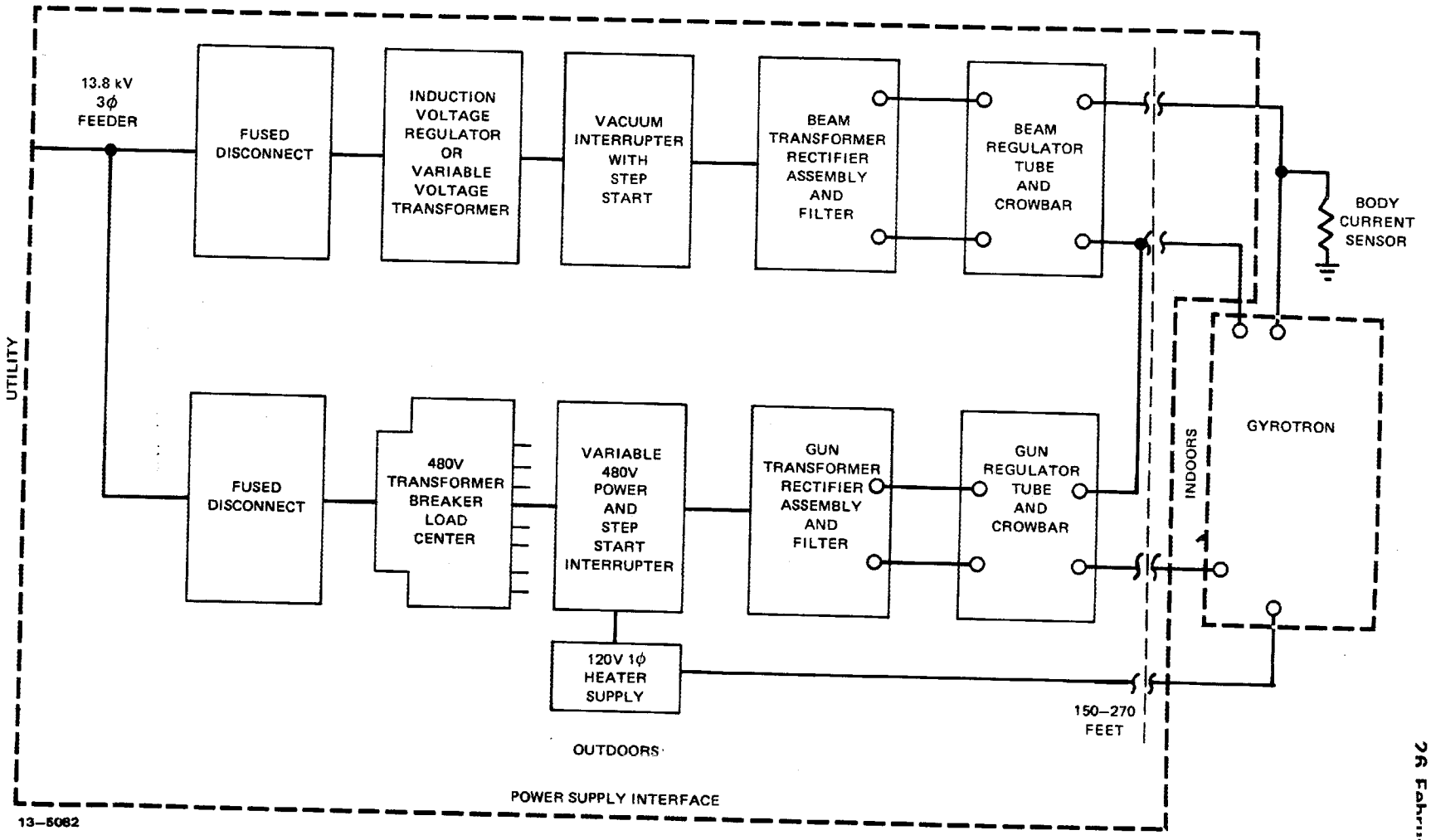

FIGURE 4.4.2 ECRH POWER SUPPLY SYSTEM BLOCK DIAGRAM

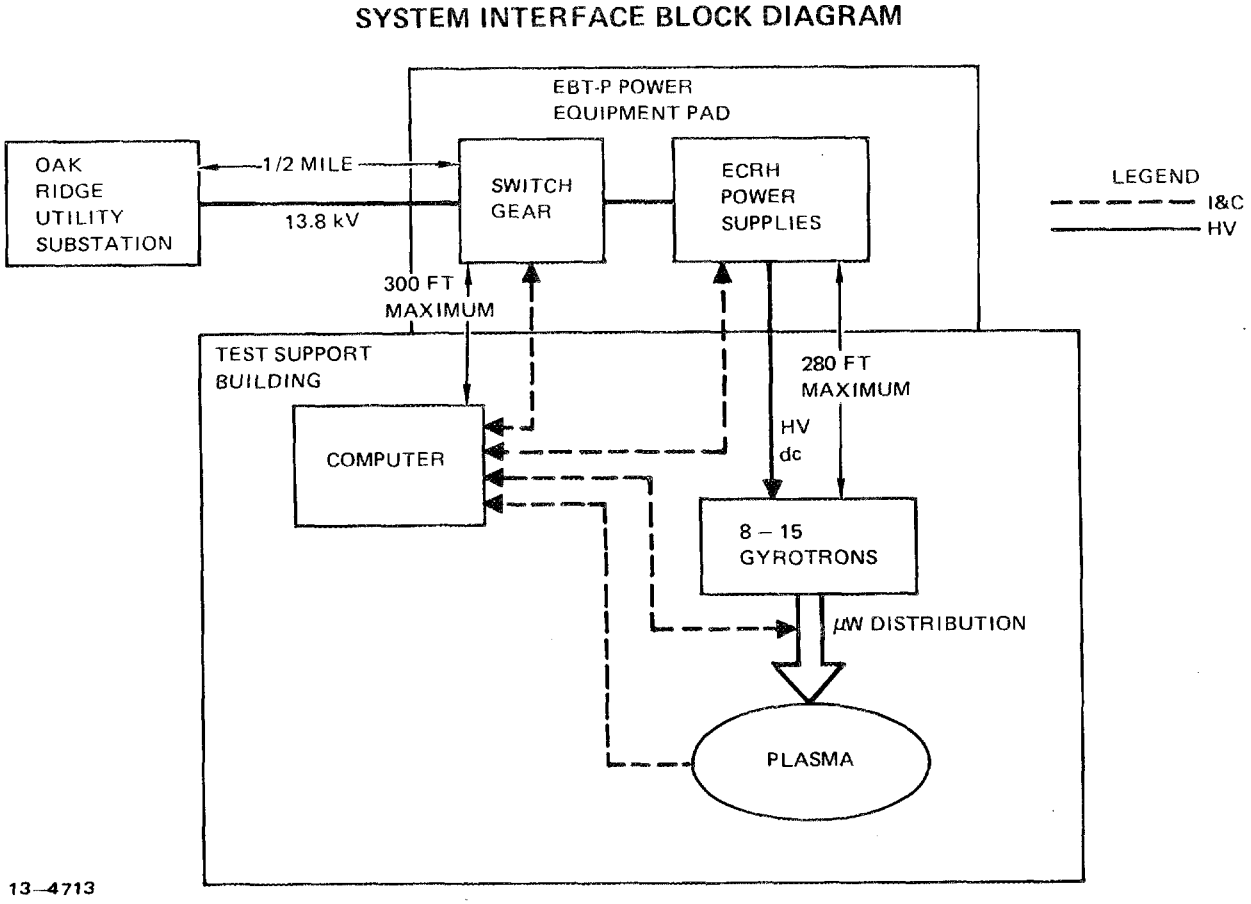

FIGURE 4.4.3 EBT-P BUILDING ARRANGEMENT

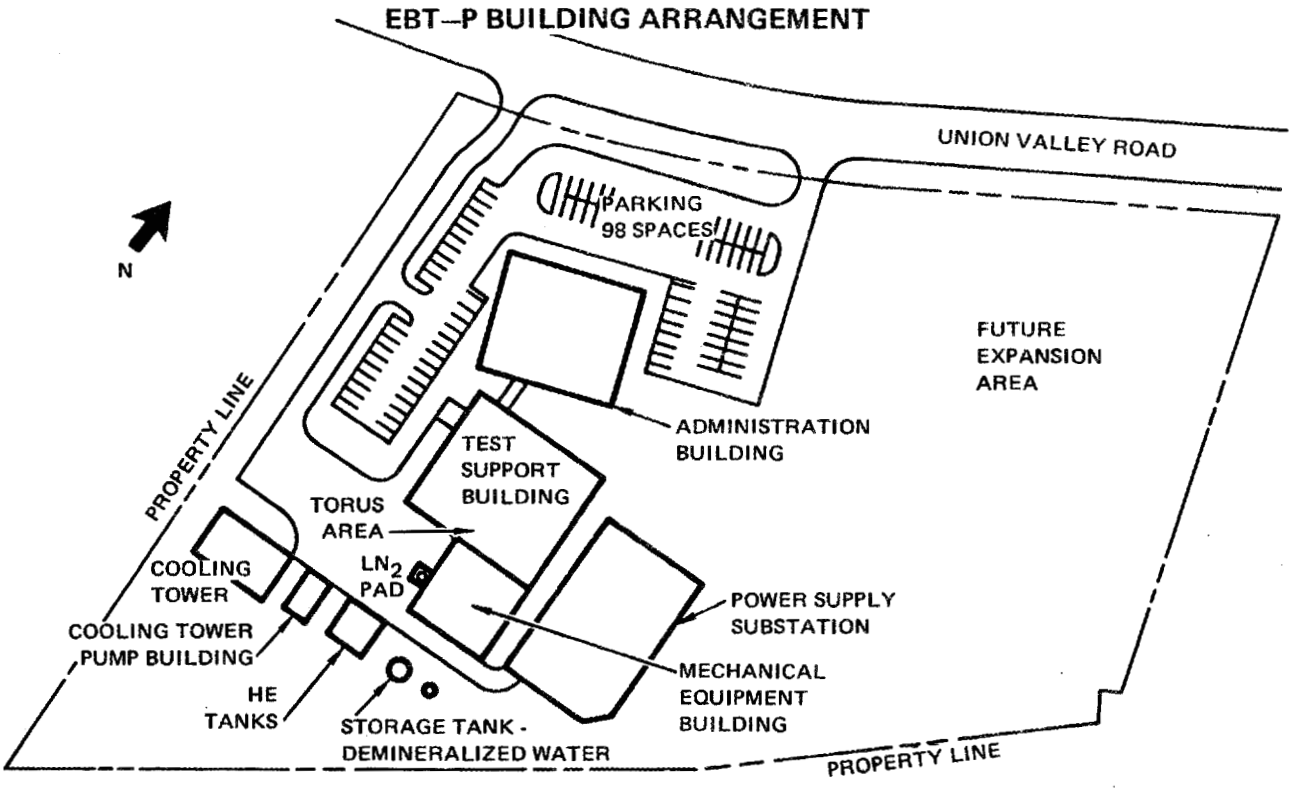

13–5087

FIGURE 4.4.4 EBT-P OUTDOOR POWER SUPPLY PAD

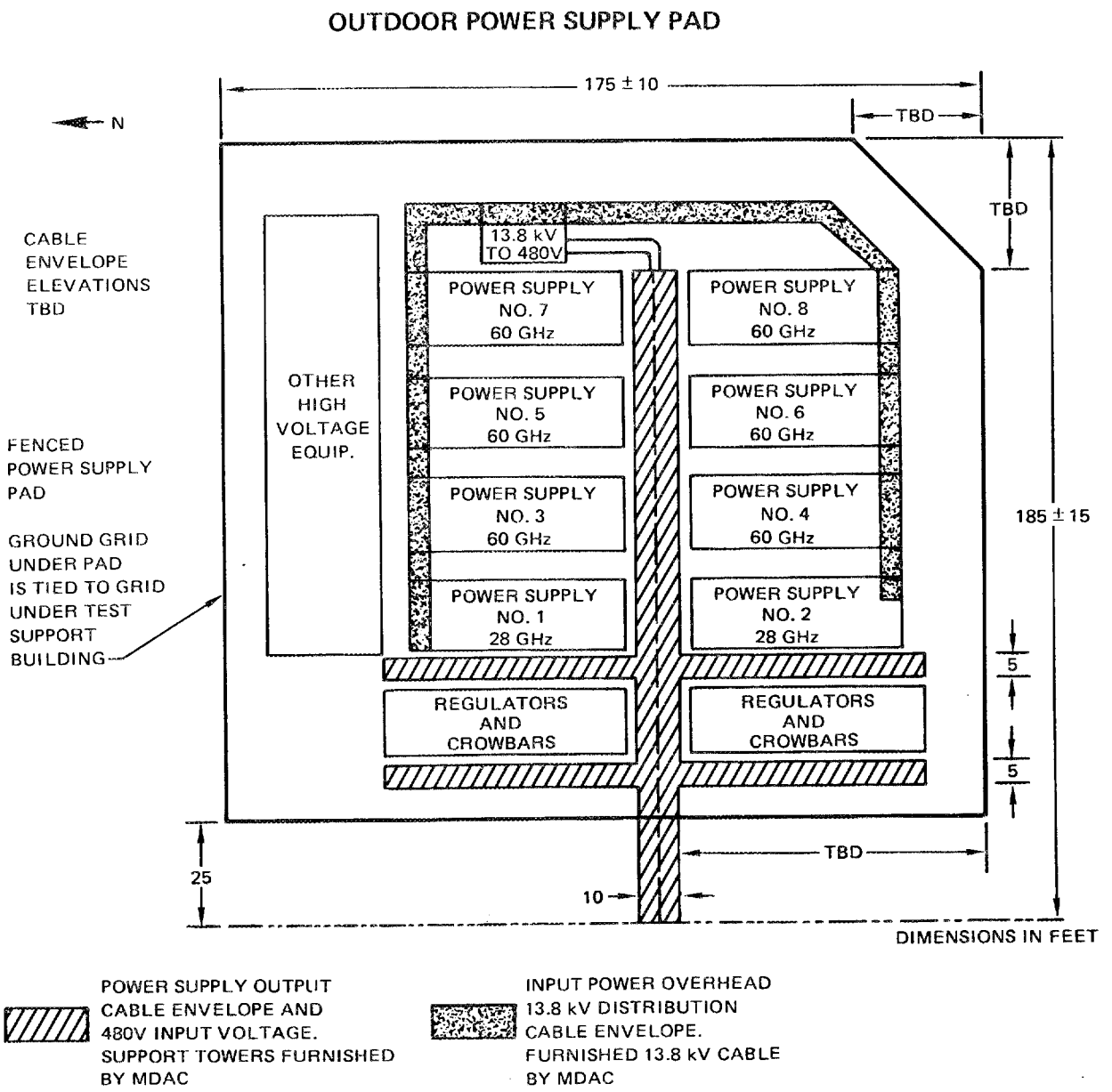

13–5083

The Gyrotron Beam power supplies shall receive input power directly from the 13.8 kV "U" shaped distribution cable. The Electron Gun supplies shall receive 480 Vac input power from a stepdown 13.8 kV to 480 V 3ϕ transformer and breaker assembly. Eight remotely operated breakers shall enable power to be applied to each of the Gun Supplies. The interconnection of all the power supply equipment shall be accomplished using overhead cables located inside of conduit. The high voltage cable, between the gyrotron tube and the outdoor regulator crowbar assemblies, shall be impedance matched and spliced together immediately outside the 8 foot thick concrete enclosure (see Figure 4.4.5). Each high voltage cable routed through the concrete penetration, shall have a multiple number of bends within the concrete to attenuate X-ray radiation through the penetration.

Each of the power supplies shall consist of two cascaded variable voltage, regulated, dc power supplies and a heater supply as shown schematically by Figure 4.4.6.

These power supplies shall consist of the following assemblies:

Assembly	Identification
JB1	15 kV Fused Disconnect Switch
JN1	15 kV Variable Reactor (Transformer)
JB2	25 kV Step Start Vacuum Interrupter
JN2, JN3	Rectifier Transformer Assemblies
JB3	480 V Distribution and Heater Supply
JN4	Gun Raw Supply and Rectifier Assembly
JN5	Gun Crowbar, Modulator and Regulator Assembly
JN7	Beam Crowbar, Modulator and Regulator Assembly*

* The beam series regulator tube is not baselined but is included throughout this report for planning purposes pending identification of the actual 60 GHz gyrotron tube requirements.

FIGURE 4.4.5 EBT-P INDOOR CABLE AND WIRE ROUTES

INDOOR CABLE AND WIRE ROUTES

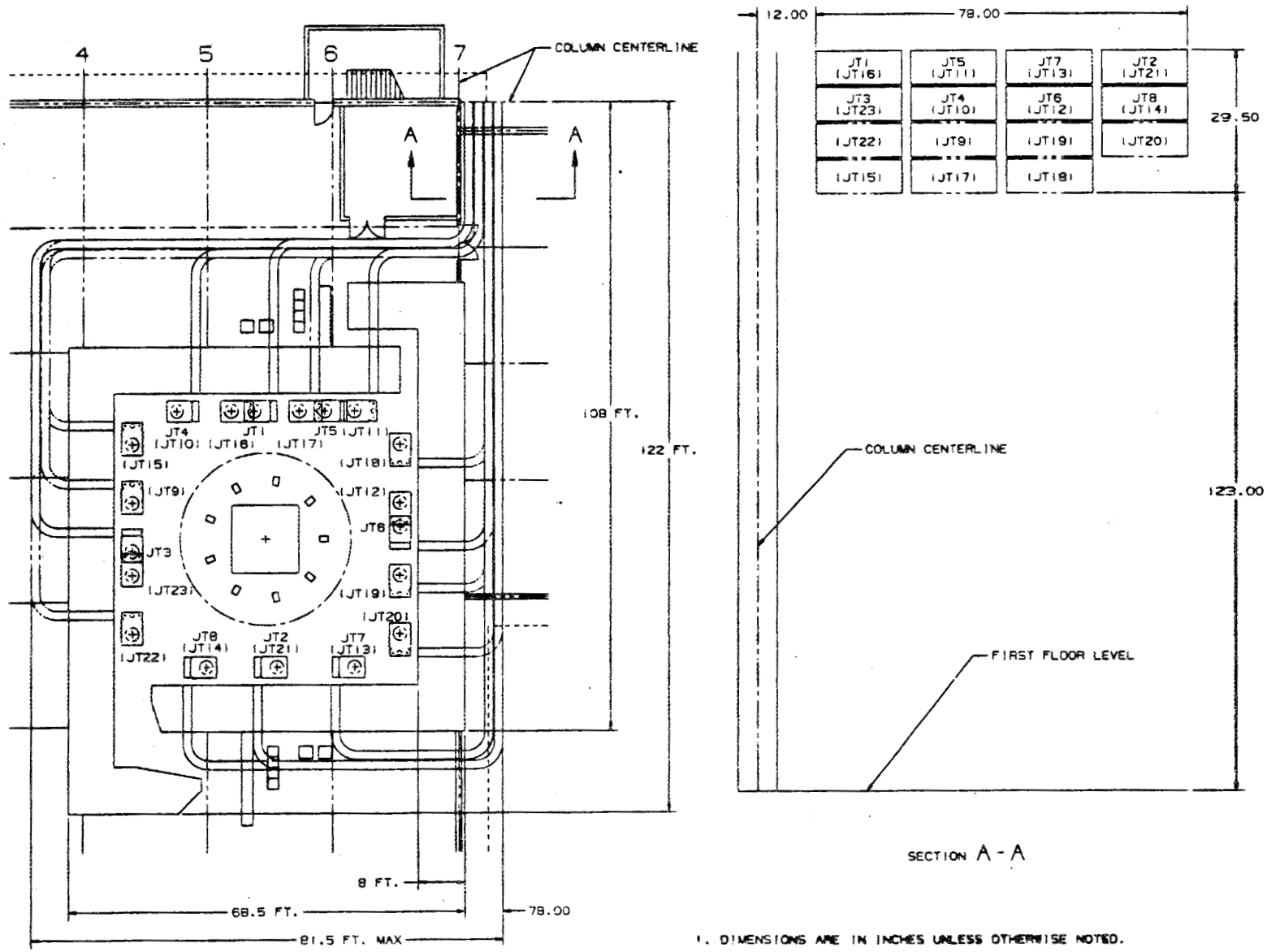

NOTES:

1. DIMENSIONS ARE IN INCHES UNLESS OTHERWISE NOTED.

13-5110

FIGURE 4.4.6 CW GYROTRON POWER SUPPLY INTERFACE

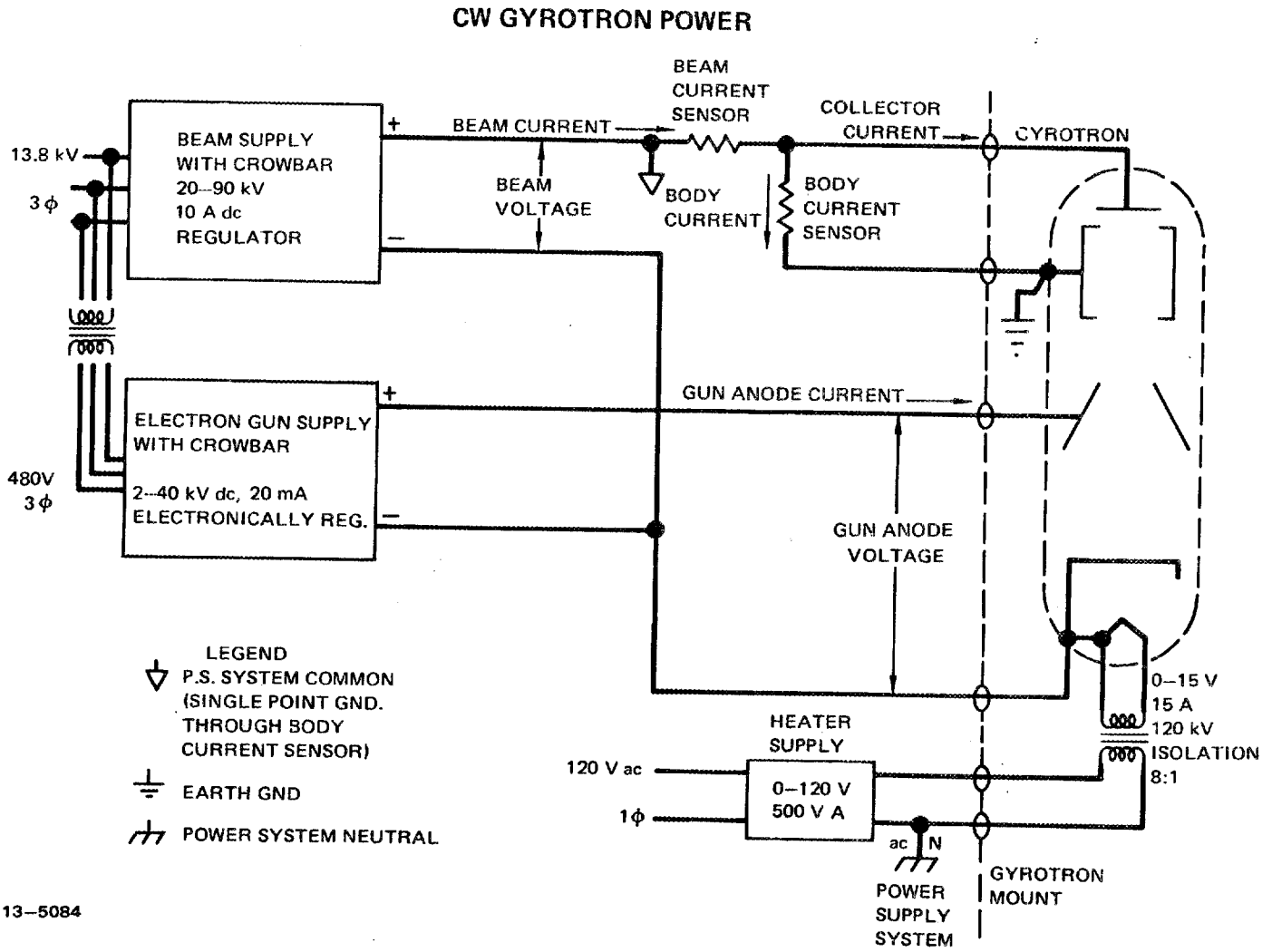

The location of these assemblies on the power supply pad shall be as shown on Figure 4.4.7 and 4.4.8. All the power supply equipment shall be designed for a minimum of 10 years expected life with 20000 minimum operations. The supply shall be adjustable and shall be controlled by a computer system which interfaces with the supply.

Input Power - The input power distribution for the EBT-P facility including the ECRH power supply pad, is still being designed by the City of Oak Ridge. The input for the beam supply will be 13.8 kV, 3ϕ, 60 Hz sequence A, B, C from a breaker whose nominal MVA rating is TBD. The specification for the stepdown transformer and its impedance which supplies the breaker, is also TBD. This transformer and breaker will be located approximately 1/2 mile from the power supply pad as shown in Figure 4.4.9. The preliminary input power requirements are summarized below in Table 4.4.1.

TABLE 4.4.1. INPUT POWER

SOURCE - CITY OF OAK RIDGE TENNESSEE
3Ø 3 WIRE WYE - 13.8 kV
FREQUENCY - 60 HZ
AVAILABLE SHORT CIRCUIT MVA - TBD MAXIMUM
AVAILABLE SHORT CIRCUIT MVA - TBD MINIMUM
STEADY STATE VOLTAGE TOLERANCE - TBD
PHASE SEQUENCE - A, B, C
PHASE UNBALANCE - ±1%
SOURCE IMPEDANCE - TBD %
INPUT BREAKER SUBSTATION RATING - TBD
CONTINUOUS CURRENT RATING - TBD
MOMENTARY CURRENT RATING - TBD
FAULT INTERRUPT RATING - TBD
MAXIMUM INTERRUPT TIME - 6 CYCLES
INPUT CONDUCTOR - (2) 500 kcmil/PHASE 15 kV CABLE
INTERFACE LOCATION - COVER HIGH VOLTAGE FUSE DISCONNECT SWITCH
CONNECTOR AT INTERFACE - SPADE TERMINAL TBD
SYSTEM X/R RATIO - TBD

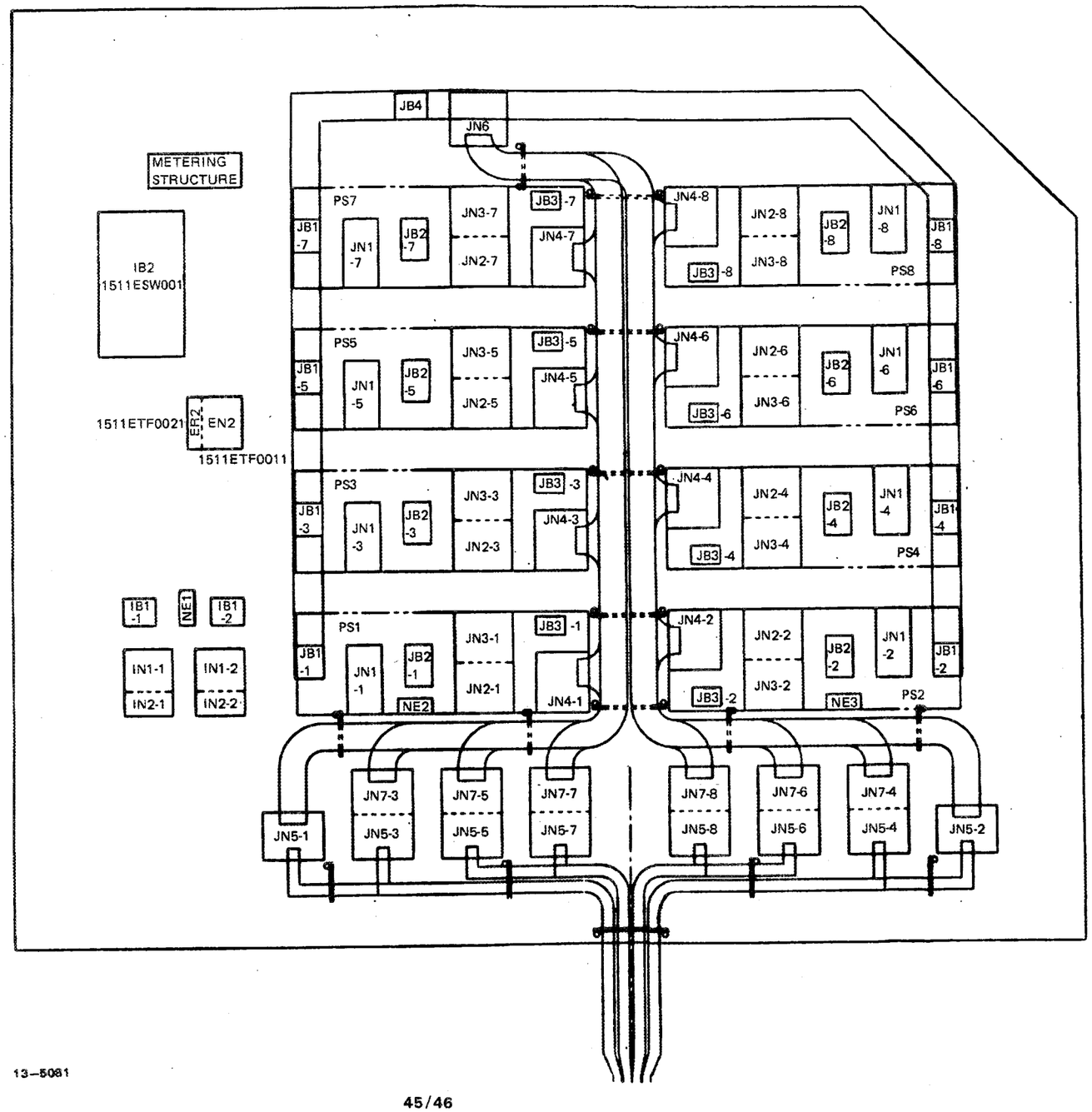

REF DES	NOMENCLATURE
EN2	13.8 – 2.4 kV INTERBUS TRANSFORMER
ER2	GROUNDING RESISTOR
IB1-1	13.8 kV SWITCHGEAR
IB1-2	13.8 kV SWITCHGEAR
IB2	13.8 kV SWITCHGEAR
IN1-1	PLATE RECTIFIER AND TRANSFORMER
IN1-2	PLATE RECTIFIER AND TRANSFORMER
IN2-1	PLATE CHOKE
IN2-2	PLATE CHOKE
JB1-1 THRU JB1-8	13.8 kV SWITCHGEAR
JB2-1 THRU JB2-8	25 kV VACUUM INTERRUPTER
JB3-1 THRU JB3-8	480 V VARIABLE POWER
JB4-1 THRU JB4-8	13.8 kV SWITCHGEAR
JN1-1 THRU JN1-8	13.8 kV INDUCTION VOLTAGE REGULATOR VARIABLE VOLTAGE TRANSFORMER
JN2-1 THRU JN2-8	DELTA BEAM RECTIFIER TANK
JN3-1 THRU JN3-8	WYE BEAM RECTIFIER TANK
JN4-1 THRU JN4-8	40 kV GUN RAW POWER TANK
JN5-1 THRU JN5-8	GUN REGULATOR AND GUN CROWBAR
JN6	13.8 kV : 480 V XFMR BREAKER LOAD CENTER
JN7-3 THRU JN7-8	BEAM REGULATOR AND CROWBAR
NE1	NEMA ICRH
NE2	NEMA ECRH
NE3	NEMA ECRH

13–5081

FIGURE 4.4.8 POWER SUPPLY COMPOSITE LOCATION

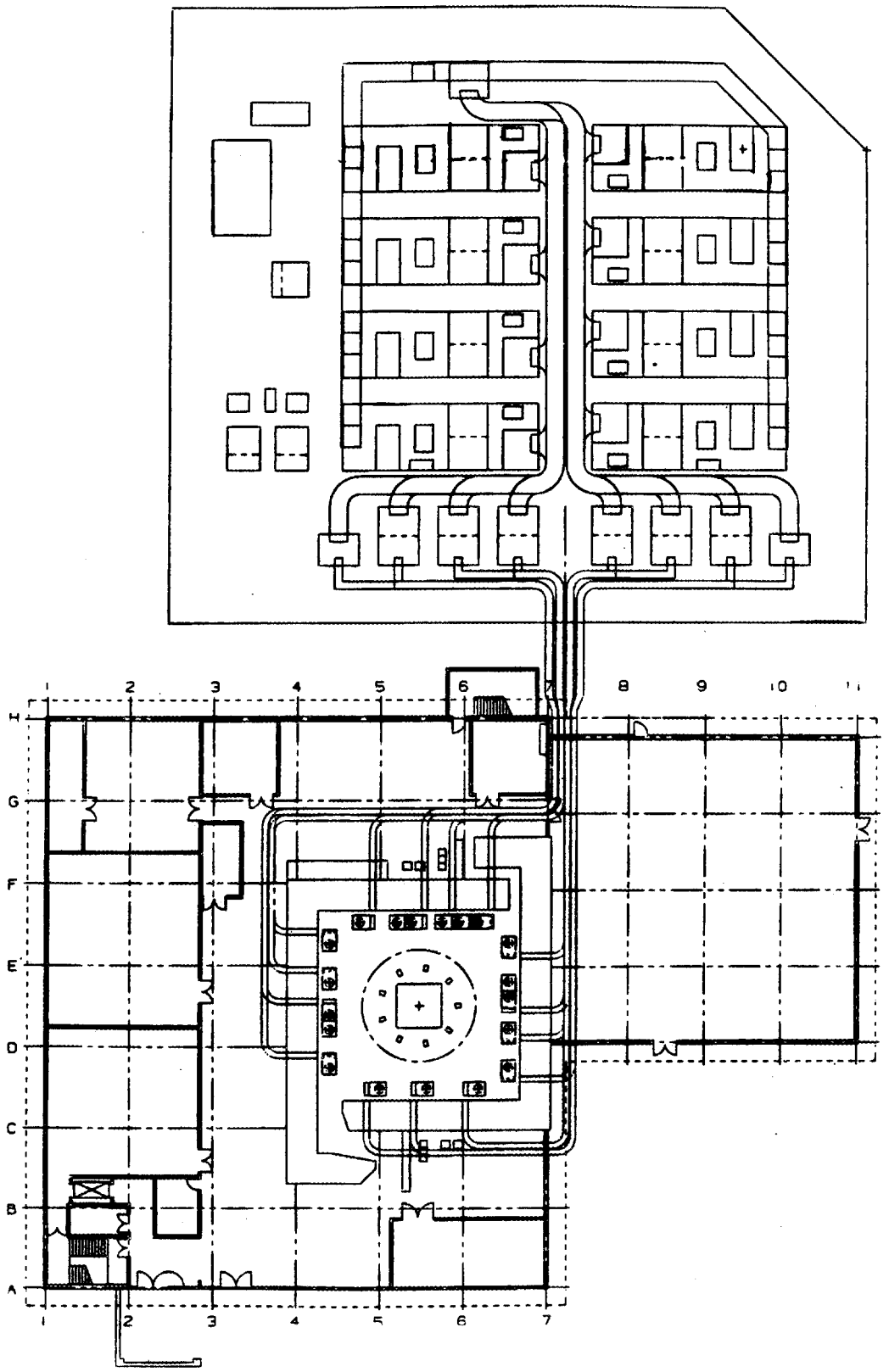

13–5080

FIGURE 4.4.9 EBT-P ECRH POWER SUPPLY ELECTRICAL ONE LINE DIAGRAM

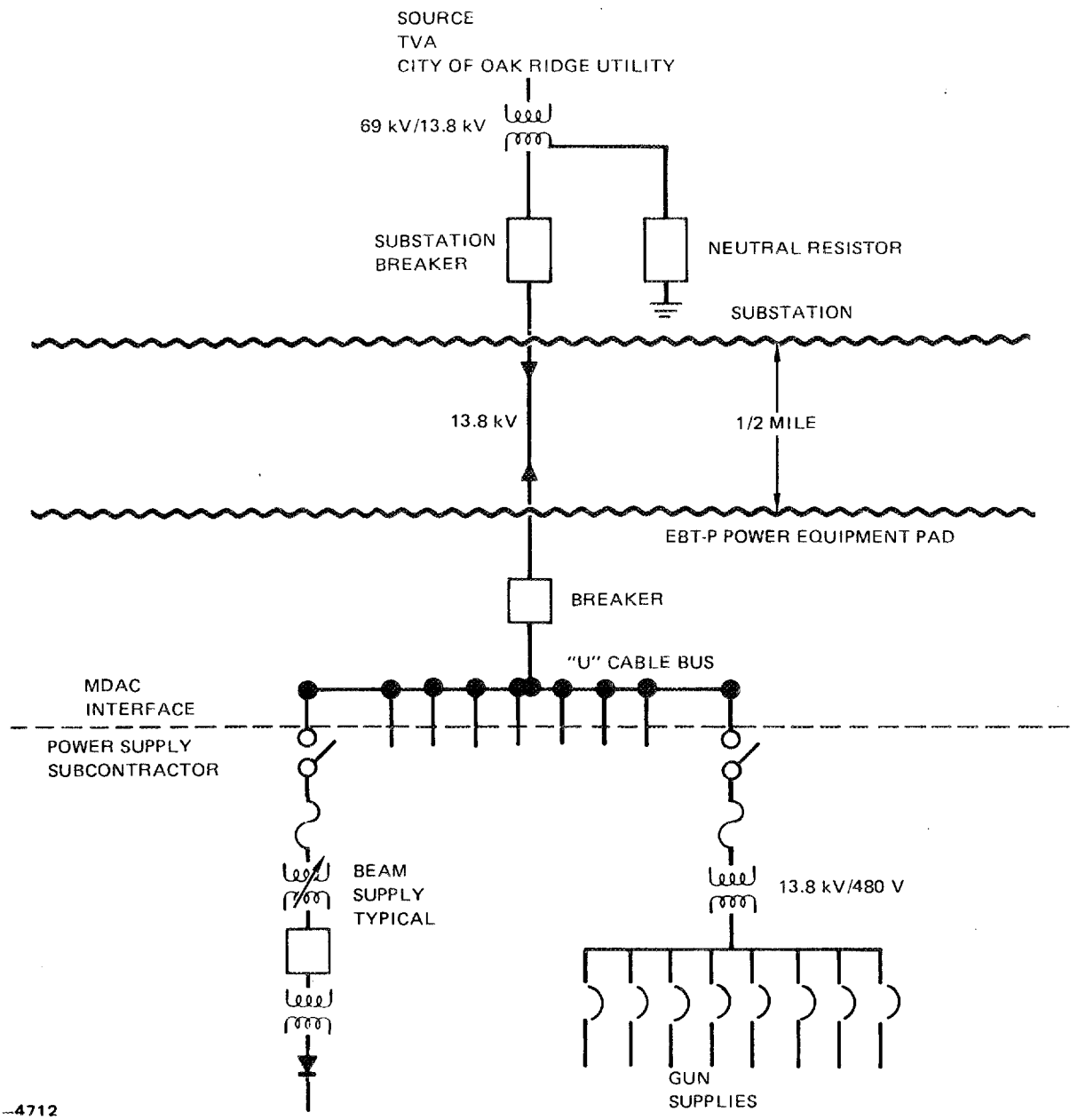

Each of the power supplies shall interface with the 13.8 kV "U" shaped distribution cable by a vertically dropped cable which penetrates the top of the Fused Disconnect Switch.

The input power for the electron gun supply, regulated heater supply and control and auxiliary equipment shall be derived from the 3ϕ 480 Vac buss using transformers furnished by the power supply subcontractor.

Output Requirements

Beam Supply - power, 900 kW, continuous dc voltage, negative 90 kV dc at 10 A. Ripple and noise TBD. Regulation - 15% maximum 0 to 10 A dc TBD against slow changes in output line. Leakage Resistance-to-ground 10^9 Ω.

Electron Gun Supply - power, 4 kW continuous voltage, 40 kV dc at 20mA. Ripple and noise .1% pk-to-pk. Regulation 0.3% for 3% line change 250V for load change from 100 mA to 10 mA. Leakage Resistance-to-ground 10^9 Ω.

Heater Supply - power, 500 VA continuous ac voltage, 0 to 120 Vac. Stabilized to $\pm 1\%$ against 10% line changes.

Electrical Interface - The power supply system shall be designed and constructed to interface with the Gyrotron Mount. The mount contains the gyrotron tube, focusing magnets, a heater stepdown isolation transformer, heater metering transformers, transient protection for the gyrotron tube, and surge limiting resistors shown per Figure 4.4.10.

Preliminary Power Supply Component (Description)

13.8 kV Disconnect Switch - The 13.8 kV, 3ϕ, 60 Hz, metal enclosed, outdoor, fused disconnect switch shall be of compact modular design of tamper proof construction. The design shall include controlled access and include protection from rodents, insects, and weeds, with electrical and mechanical characteristics commensurate with arcing faults. Equipment internal to the enclosure shall be capable of safely interrupting the maximum short circuit current of the design rating.

FIGURE 4.4.10 EBT-P GYROTRON MOUNT

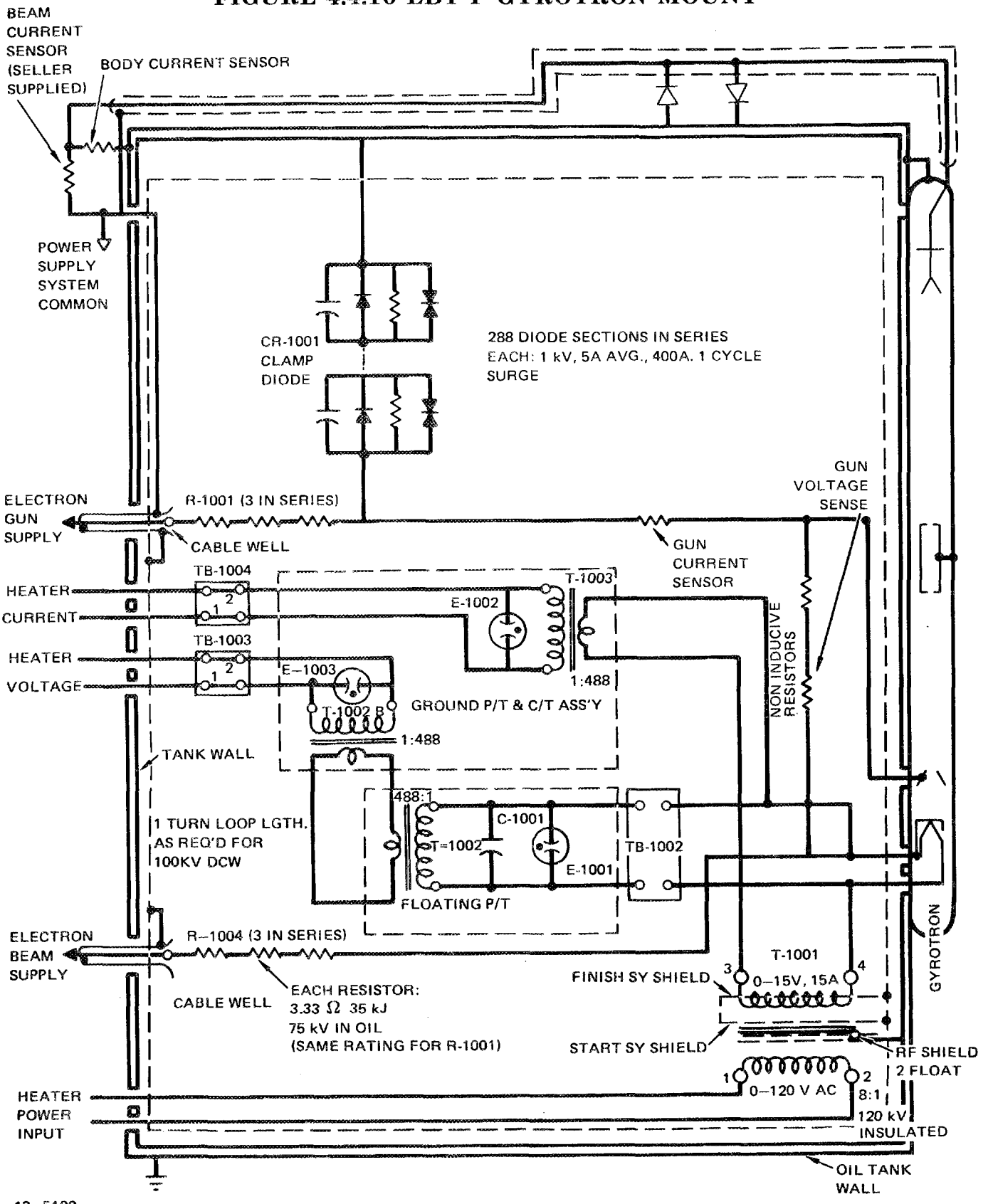

13–5100

The switch module shall accommodate top entrance and exit, by cable inside conduit, of 15 kV, 3-conductor, shielded cables with adequate room provided for stress cone terminations. The switch shall be electrically operated from the control panel as well as from the computer. The switchgear shall be equipped with a key interlock which locks the switch in the open position and allows removal of the key in the open position. Additional details of the fused disconnect switch are found in the power supply specification.

25 kV Class Circuit Interrupter - The 25 kV, three ϕ, 60 Hz outdoor interrupter shall be the step-start vacuum type with SCR solenoid drivers. The vacuum interrupter shall step-start only. It shall not stepoff. It shall withstand the excessive currents and numerous operations to which the equipment supplied will be subjected due to its load application. Total trip and interrupt time shall be less than 1 cycle. Also, it shall provide overload and short circuit protection for the equipment it serves. The step-start vacuum type interrupters shall be mounted in a metal enclosure such that all high voltage components and parts are isolated from the low voltage components and operating personnel. It shall include a separate section for terminating the incoming supply line. Ready access shall be provided for maintenance of the control circuits and mechanical operating devices. The interrupter shall be provided with a counter (0-99999). Fault current interrupt rating shall be commensurate with available fault current through the variable voltage transformer.

Variable Primary Power For The Beam Supply - The variable primary source for the beam supply shall have a minimum adjustable range of 20% to 115% as measured at the dc output with no load. This device shall be adjustable under load from the process controller. The full range of output voltage variation shall be accomplished in a time period not less than twenty seconds nor greater than sixty seconds. The variable primary source shall provide continuous variation of the beam voltage. This device shall be a motor driven induction voltage regulator or a variable voltage transfomer. It shall be rated for at least 400 full-range operating cycles in a 24-hour period. In addition, it shall be used to regulate the dc output voltage. The process controller shall be furnished by MDAC as part of the computer system for controlling this equipment.

Because the device will be subjected to repetitive short-circuit currents and voltage transients resulting from gyrotron arcs and crowbarring, a heavy duty mechanical drive mechanism shall be used. All load bearing components and gears of the drive system shall

be machined from high strength steel. Castings shall not be permitted. There shall be no damage to the drive mechanism if gyrotron arcing or crowbarring occurs at a time when the voltage is being varied. Using the force which results from a full asymmetric short circuit (with rotor at minimum impedance position), shear pins and couplings in particular shall be conservatively designed to withstand the resulting stress levels. In addition to the electromechanical regulator, the 60 GHz tube beam supply may require an electronic series regulator tube*.

Variable Primary Power For The Electron Gun Supply - The variable primary power source for the electron gun supply shall be continuously variable from 0 to 100%. This device shall be adjustable under load from the process controller. The device will be subjected to frequent short circuit currents and voltage transients resulting from gyrotron arcs and crowbarring.

Transformers shall be designed and constructed in accordance with the industrial standards found in the reference section of this report. The transformers shall be suitable for operation with the system subject to frequent short circuit conditions.

The power supply subcontractor shall protect all interfaces to prevent ground potential differences and to insure electromagnetic compatibility, ac power regulation, ac power isolation; and provide EMI shielding and adequate filtering and transient protection. Each supply shall have a hardwired interlock system (see Figure 4.4.11) which shall be exclusively dedicated for personnel and equipment protection. Operational monitoring and control shall be provided by an Allen Bradley PLC-3 process controller. The process controller shall provide for startup, operation, shutdown and system integration of the power supply. The sensors and controls for both the hardwired interlocks and the power supply process controller system interface shall be provided by the power supply subcontractor. The hardwired interlock system shall respond to discrete and analog commands from the process controller system. The power supply specification identifies; monitors, controls and commands required for the operation of the power supply system.

* The beam series regulator tube is not baselined but is included throughout this report for planning purposes pending identification of the actual 60 GHz gyrotron tube requirements.

FIGURE 4.4.11 EBT-P ECRH POWER SUPPLY I&C INTERFACE

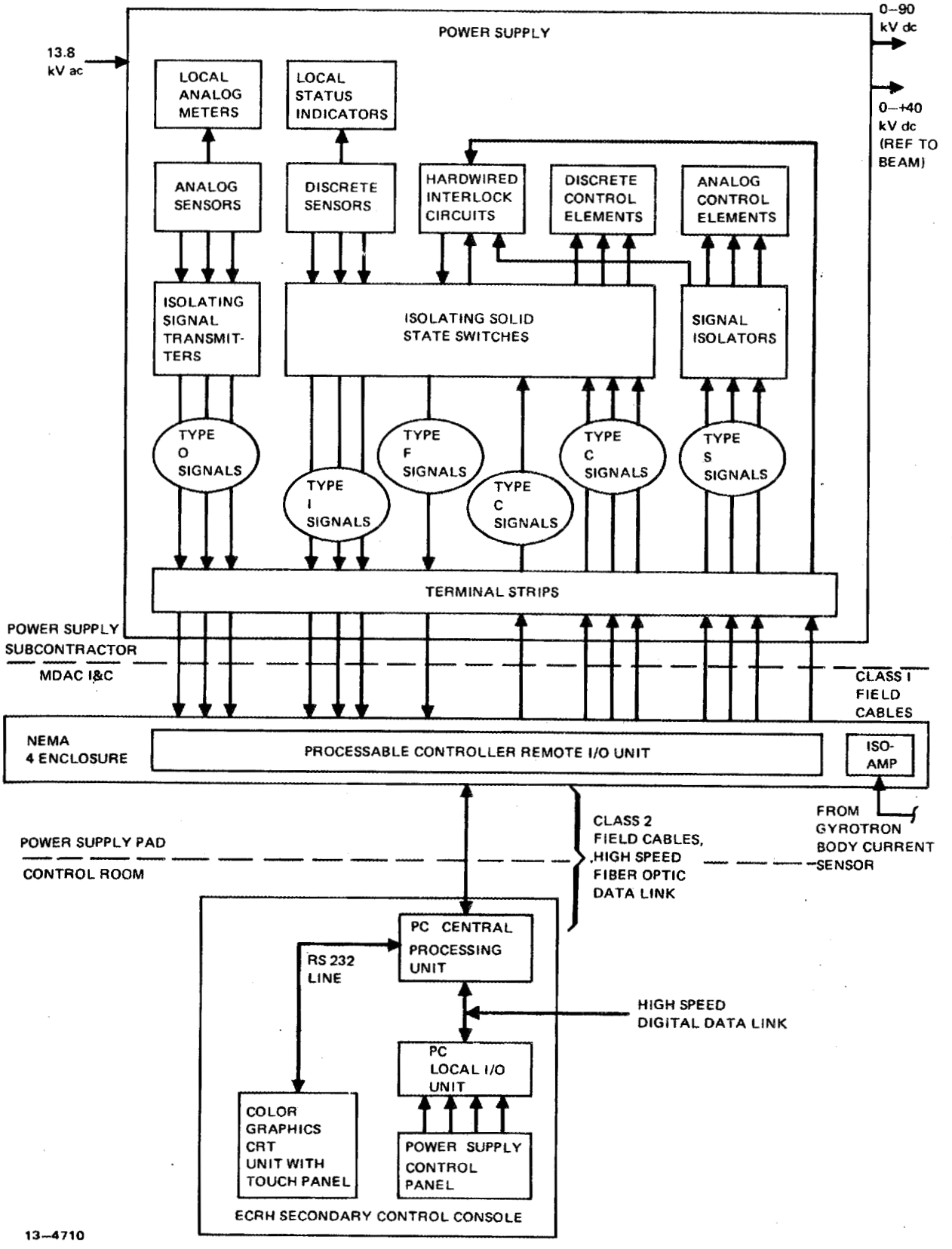

Detail design of the complete grounding system shall be provided during Title II design. The system shall monitor gyrotron body current by floating the entire supply with respect to ground and connecting the gyrotron tube and tube mount to the ground at one point inside the torus area. Secondary common return lines and dc power returns shall be connected to faraday shields and isolated from ground. The transformer cores shall be connected to the ac tank ground. These connections insure that the noise generated inside of the tanks will return to the faraday shield rather than the gyrotron body current ground circuit return monitor. Controls and metering lines leaving the cabinets shall provide adequate voltage isolation including feed thru components, and shall incorporate clamping or grounding techniques to prevent high voltage from being present on control cables or components. Metal enclosures shall be grounded to the electrical ground grid in accordance with requirements of the National Electrical Code NFPA No. 70. Connection to the Electrical Safety Ground shall be by a green insulated wire, while enclosure grounds shall be bare copper. The power supply dc return shall be isolated with the single point ground of the system located adjacent to the gyrotron mount (see Figure 4.4.12). Details of the grounding terminals, location and size shall be established after the selection of a power supply subcontractor during the Title II design.

All high voltage coaxial cables interconnecting major pieces of equipment, shall be installed in conduit with welded joints. All cabinets and equipment enclosures shall have inner shields connected to the power supply common so as to make the entire system double shielded. Power supply common and the inner shields shall be isolated from ground except for the single connection provided by the body-current sensing resistor.

Mechanical and Physical Requirements - The physical size of the equipment shall be kept to a minimum. Space available for installation is limited as specified herein.

The space allocated for this installation is shown in Figure 4.4.4. A height of fourteen feet will be permitted for assembled equipment (including bushings). The overall dimensions and approximate weights of the major pieces of equipment shall be supplied by the power supply subcontractor and included with this proposal. In addition, the following features shall be incorporated into the power supply design.

- Capacitor banks shall be mounted in air-insulated outdoor enclosures.

FIGURE 4.4.12 EBT-P PRESENT AND UPGRADE GYROTRON LOCATION

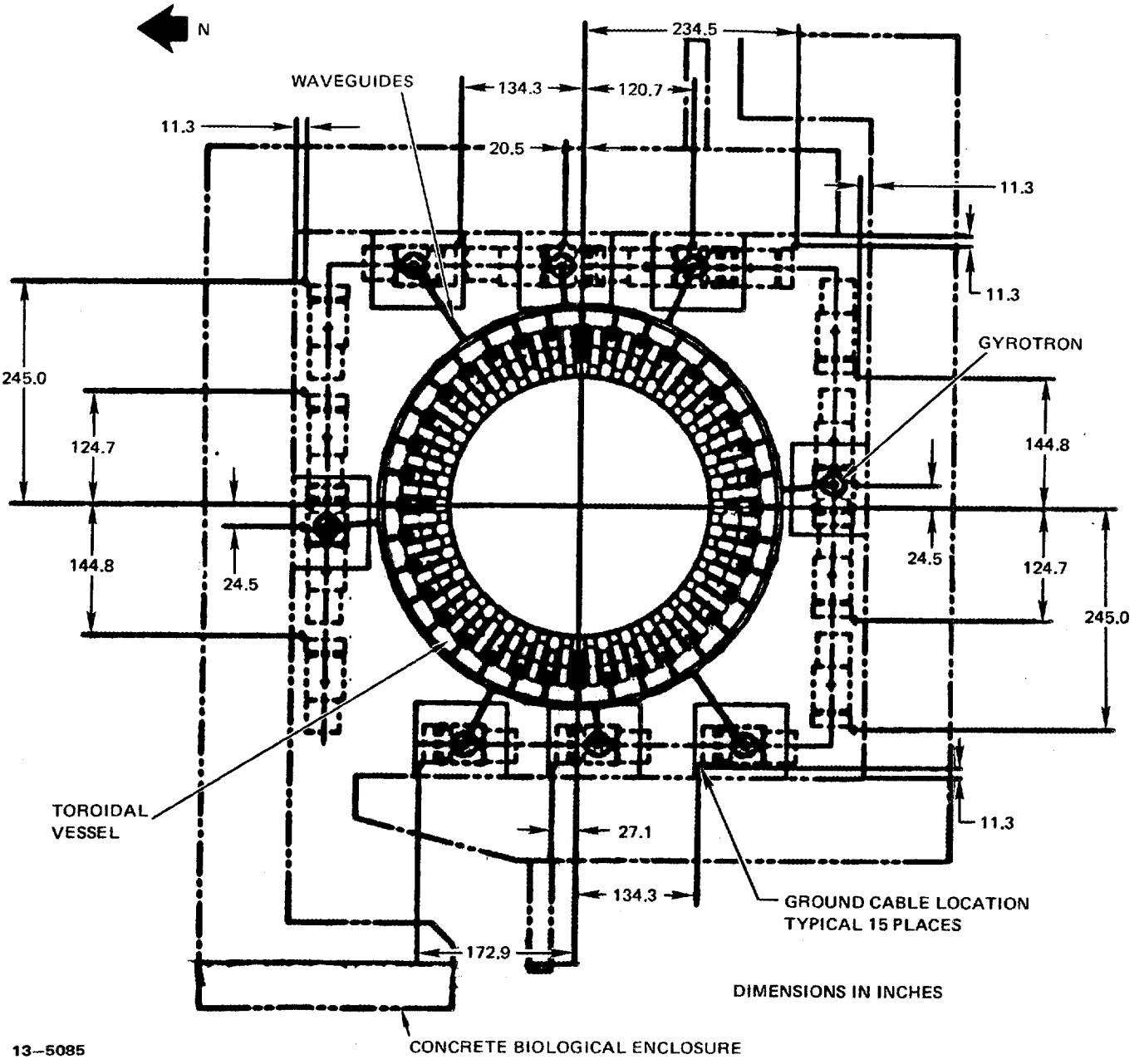

- The power supply system shall interface directly to the gyrotron mount.
- All major components shall be rated for outdoor service.
- All equipment shall be air-cooled or identified with cooling water interface requirements.

All gasketed joints on oil tanks shall have smooth surfaces on both sides, and shall be provided with gasket retainers and metal-to-metal stops to assure an even and effective pressure which will not overstress the gasket. Gaskets shall maintain liquid and gas tightness of joints under all service and fault conditions.

The transformer rectifier tanks shall have lifting hooks and an inspection plate for rectifier assembly removal. The inspection plate shall also have lifting hooks. These tanks shall also be provided with standard 15 psi pressure-vacuum gauges.

All the high voltage power supply equipment shall have terminators with insulation levels equal to or greater than the insulation level of the equipment to which it is connected. The equipment shall include mounting provisions, ground pads, self cooling and a nameplate with complete equipment identification. A design safety factor of five shall be maintained on all lifting, moving and jacking facilities for this outdoor equipment. On oil filled equipment, additional requirements shall include a pressure gauge, fill valve, drain and filter valve, liquid level gauge, oil temperature indicator and a pressure relief device located according to standard practices.

Size - The assembly configuration shall be as shown in Figure 4.4.4. Individual maximum assembly dimensions in inches shall be as shown in Table 4.4.2.

All access doors on all equipment shall be interlocked, hinged, and removable. The maximum door width shall be 4 foot. If additional access space is required other access panels shall be removable by opening the access doors.

Weight - The individual assembly weight shall not exceed the specified weight in Table 4.4.3.

The equipment shall be designed to operate continuously in an outdoor environment on a concrete pad.

Environmental Conditions - The equipment shall be compatible and rated for usage in the outdoor environments specified in Table 4.4.4.

TABLE 4.4.2
EBT-P ECRH POWER SUPPLY MAXIMUM ENVELOPE SIZE

ASSEMBLY	NAME	WIDTH	DEPTH	HEIGHT	FIGURE
JB1	13.8 kV SWITCHGEAR	56	44	135	11
JB2	25 kV VACUUM INTERRUPTER	74	44	130	12
JB3	480 V VARIABLE POWER	49	26	80	13
JB4	13.8 kV SWITCHGEAR	56	44	135	14
JN1	13.8 kV INDUCTION VOLTAGE REGULATOR OR VARIABLE VOLTAGE TRANSFORMER	130	61	145	15
JN2	DELTA BEAM RECTIFIER TANK	110	80	92	16
JN3	WYE BEAM RECTIFIER TANK	110	80	92	17
JN4	40 kV GUN RAW POWER TANK	112	99	95	18
JN5	GUN REGULATOR AND GUN CROWBAR	114	86	102	19
JN6	13.8 kV:480 V TRANSFORMER BREAKER LOAD CENTER	110	100	90	20
JN7	BEAM REGULATOR AND CROWBAR*	114	86	105	21
JZ3	GYROTRON MAIN COIL SUPPLIES FURNISHED BY CUSTOMER				
JZ4	GYROTRON MAIN COIL SUPPLIES FURNISHED BY CUSTOMER				
JZ5	GYROTRON MAIN COIL SUPPLIES FURNISHED BY CUSTOMER				
JZ3A6	GYROTRON MAIN COIL SUPPLIES FURNISHED BY CUSTOMER				
JT1-8	GYROTRON FURNISHED BY CUSTOMER				
NE2	NEMA ECRH OUTDOOR INSTRUMENTATION & CONTROL CABINET FURNISHED BY CUSTOMER	60	20	84	
NE3	NEMA ECRH OUTDOOR INSTRUMENTATION & CONTROL CABINET FURNISHED BY CUSTOMER	60	20	84	

* The beam series regulator tube is not baselined but is included throughout this report for planning purposes pending identification of the actual 60 GHz gyrotron tube requirements.

TABLE 4.4.3
MAXIMUM EBT-P ECRH POWER SUPPLY ASSEMBLY WEIGHTS

ASSEMBLY	MAXIMUM WEIGHT (LBS.)
JB1	3500
JB2	3500
JB3	1000
JB4	3500
JN1	34000
JN2	23000
JN3	23000
JN4	23000
JN5	6600
JN6	4500
JN7	7600

TABLE 4.4.4
EBT-P ECRH POWER SUPPLY ENVIRONMENTAL REQUIREMENTS

RATED SERVICE REQUIREMENTS	SHIPPING	STORAGE	DESIGN OUTDOOR OPERATION CRITERIA
AMBIENT TEMPERATURE			
MAXIMUM	45°C	45°C	40°C
MINIMUM	-40°C	-40°C	-30°C
24 HOUR AVERAGE MAXIMUM			30°C
ALTITUDE (FEET) MAXIMUM	13133	3300	3300
RELATIVE HUMIDITY	0-100%	0-100%	0-100%
AVERAGE HUMIDITY			70%
AVERAGE ANNUAL PRECIPITATION			4 FT
AVERAGE ANNUAL SNOWFALL			1 FT
WIND PRESSURE			20 PSF
VIBRATION AND SHOCK	STD TRUCK SHIPMENT DESIGN PRACTICE BY SUPPLIER		UNIFORM BUILDING CODE SEISMIC ZONE 2
ACCELERATION	STD TRUCK SHIPMENT DESIGN PRACTICE BY SUPPLIER		NA

5.0 SUPPORTING ANALYSIS

This section contains supporting analysis which were performed to supplement the system analysis activities associated with the Title I Microwave System design. In each instance the analysis was preliminary and based on assumptions which could not be validated experimentally. These limitations were taken into consideration when establishing the tolerances for interface requirements.

5.1 28 AND 60 GHZ MICROWAVE DISTRIBUTION SYSTEM POWER FLOW FOR EBT-P

The microwave distribution system is shown schematically in Figure 5.1.1. The assumptions used and the calculated dissipations were based on the distribution analysis contained in the MDAC proposal. Preliminary information which was supplied the EBT-P program from the EBT-S program indicated that the existing miter bends produced significant reflected power. The results of this analysis for the 28 GHz and 60 GHz microwave distribution system is depicted in Figures 5.1.2 and 5.1.3 respectively. The overall distribution efficiency (calculated) was 79% for 28 GHz and 84% for 60 GHz. Subsequent data from the EBT-S program has shown that the EBT-S 2-miter bend distribution system efficiency is approximately 70%. This would indicate that the results of this analysis are optimistic; however, the EBT-P facility cooling system has been designed to accomodate the design required 70% distribution efficiency with margin.

5.2 GYROTRON-TO-GYROTRON REQUIRED SEPARATION AS A FUNCTION OF INTERFERING MAGNETIC FIELDS

The EBT-P ECRH system configuration will have gyrotrons in close proximity to each other. Two basic concerns which arise are (1) what is the acceptable gyrotron-to-gyrotron magnetic flux density which can be tolerated, and (2) what will be the machine magnetic flux density affect on gyrotron operation. This analysis addressed the first of these two concerns. Data will be presented for the operating gyrotron frequencies of 28 and 60 GHz.

The analysis used is based on the assumption that if the on-axis magnetic flux density is known then the off-axis magnetic flux density distribution can be found by approximat-

FIGURE 5.1.1 MICROWAVE DISTRIBUTION SYSTEM SCHEMATIC

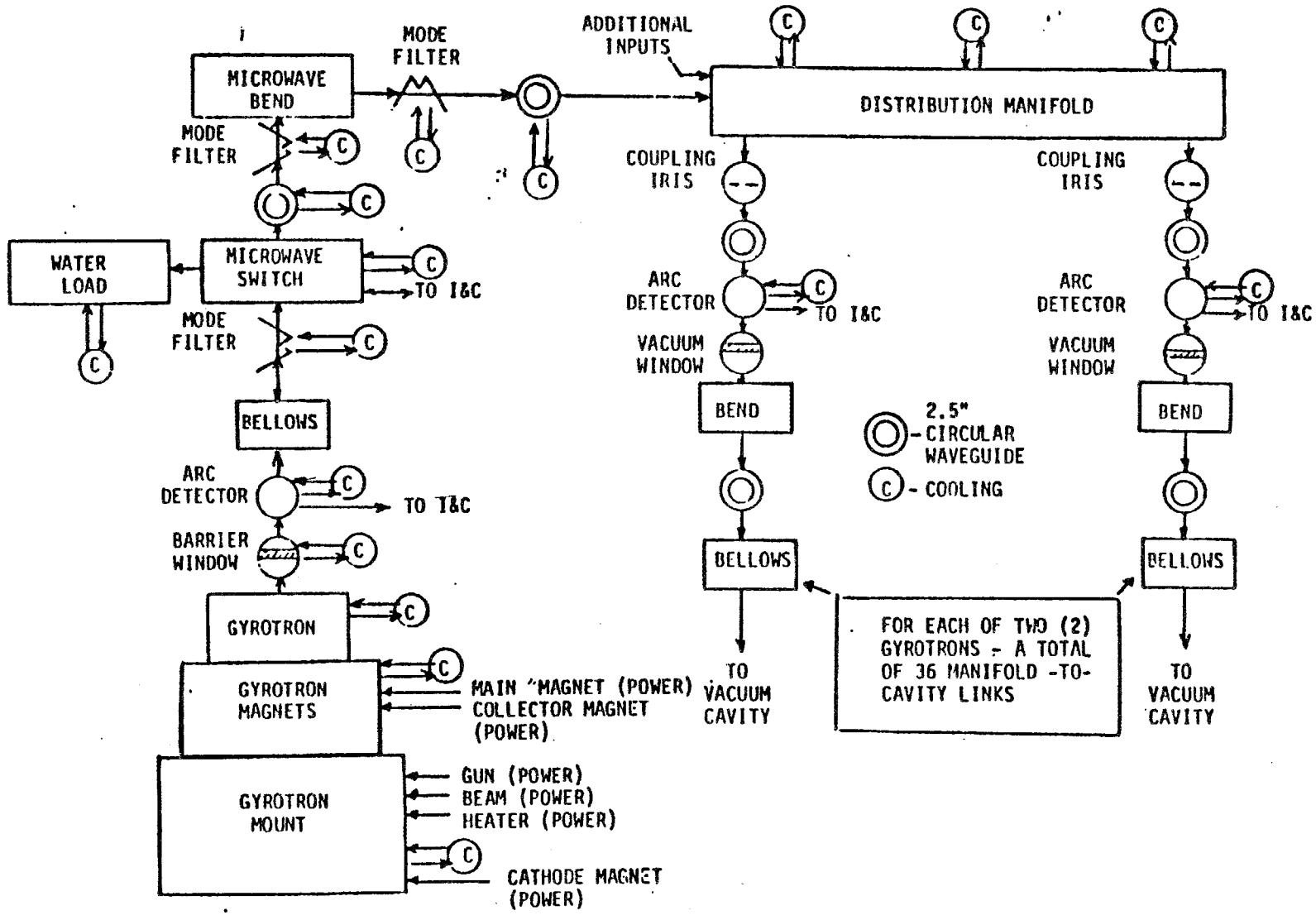

FIGURE 5.1.2
MICROWAVE DISTRIBUTION POWER FLOW
28 GHZ

COMPONENT	(FORWARD POWER) <DISSIPATION>	REFLECTED POWER	REFLECTED POWER DISSIPATION	TOTAL DISSIPATION
GYROTRON	(200 kW)			
ARC DETECTOR	—	—	—	—
MODE FILTER	<1.2 kW>	—	3.7 kW	4.9 kW
MICROWAVE SWITCH	—	—	—	—
CIRCULAR WAVEGUIDE	<1.0 kW>	—	.2 kW	1.1 kW
MODE FILTER	<.5 kW>	—	9.5 kW	10 kW
MICROWAVE BEND	—	15.8 kW	—	—
ARC DETECTOR	—	—	—	—
MODE FILTER	<2 kW>	—	—	1.9 kW
CIRCULAR WAVEGUIDE	<.3 kW>	—	—	.3 kW
ARC DETECTOR	—	—	—	—
DISTRIBUTION MANIFOLD	<14.4 kW>	—	3.6 kW	18 kW
COUPLING IRIS	—	—	—	—
CIRCULAR WAVEGUIDE	<.02 kW>	—	—	.02 kW
VACUUM WINDOW	<.13 kW>			.13 kW
BEND	—	.200 kW	—	—
CIRCULAR WAVEGUIDE	<.06 kW>	—	—	.06 kW
BELLOWS LAUNCHER	(9 kW)	—	—	—

FIGURE 5.1.3
MICROWAVE DISTRIBUTION POWER FLOW
60 GHZ

COMPONENT	(FORWARD POWER) <DISSIPATION>	REFLECTED POWER	REFLECTED POWER DISSIPATION	TOTAL DISSIPATION
GYROTRON	(200 kW)			
ARC DETECTOR	—	—	—	—
MODE FILTER	<1.0 kW>	—	1.2 kW	2.2 kW
MICROWAVE SWITCH	—	—	—	—
CIRCULAR WAVEGUIDE	<.3 kW>	—	.5 kW	.9 kW
MODE FILTER	<.5 kW>	—	2.9 kW	3.3 kW
MICROWAVE BEND	—	5.720 kW	—	—
MODE FILTER	<.8 kW>	—	—	.8 kW
CIRCULAR WAVEGUIDE	<.12 kW>	—	—	.12 kW
ARC DETECTOR	—	—	—	—
DISTRIBUTION MANIFOLD	<15 kW>	—	3.8 kW	19 kW
COUPLING IRIS	—	—	—	—
CIRCULAR WAVEGUIDE	<.07 kW>	—	—	.07 kW
VACUUM WINDOW	<.3 kW>			.3 kW
BEND	—	.426 kW	—	—
CIRCULAR WAVEGUIDE	<.2 kW>	—	—	.2 kW
BELLOWS LAUNCHER	(18.6 kW)	—	—	—

ing* the solenoid as a single current loop (see Figure 5.2.1). A single current loop can then be treated as a magnetic dipole to calculate fields not on the solenoid axis.

An additional requirement is to derive a limitation criteria for an acceptable value for the on-axis magnetic flux density. From the tentative specifications for the 60 GHz gyrotrons, the gyrotron output sensitivity to an external magnet field is given as B extraneous $\leqslant$ 7.7 gauss.

This analysis addresses the magnetic flux density produced by the main focus magnets associated with the 28, 60 GHz gyrotrons. The basic solenoid dimensions for the gyrotrons are as follows:

Operating Frequency (GHz)	Radius (Inches)	Length (Inches)
28	8	10.3
60	9	18

* Sufficiently accurate results can be obtained if the radius distance of interest is greater than ten times the coil radius. This condition was true for the cases analyzed.

The two relationships which were used are*:

(1) $\overline{B} = M_0 IN(a^2/4r^3)\ (2 \cos \Theta a_r + \sin \Theta a\theta)$

and (2) $\overline{B} = M_0 IN[1/(4a^2 + l^2)]1/2$

where $M_0 = 4\pi \times 10^{-7} H/M$

I = current amperes
N = total number at turns
a, l = solenoid dimensions (see Figure 5.2.2)
r, Θ = cylindrical coordinates (see Figure 5.2.3)
$\overline{B}$ = magnetic flux density (consistent units)
a_r, a_b = cylindrical unit vectors

Equation (1) is the expression which was used to evaluate the field off-axis, and equation (2) was used to determine the axial magnetic flux density of the solenoid.

The plot of the magnetic flux density for the 60 GHz gyrotron is included as Figures 5.2.4. In addition, the operational limitation (gyrotron location) is identified for the 60 GHz gyrotron.

* Plonus, M. A. "Applied Electromagnetics", McGraw Hill, pp. 221-226, 1978.

FIGURE 5.2.1 FIELD ON THE AXIS OF A SINGLE LOOP

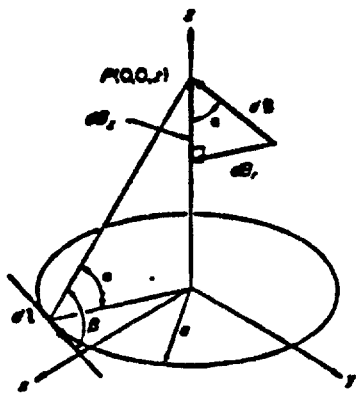

FIGURE 5.2.2 CROSS SECTION OF LONG SOLENOID

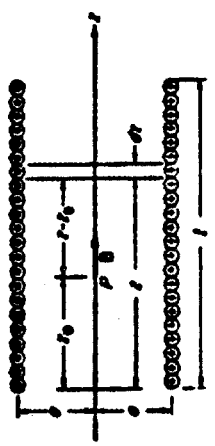

FIGURE 5.2.3 FIELD DISTRIBUTION

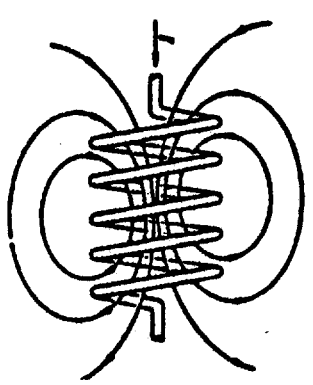

FIGURE 5.2.4 MAGNETIC FLUX DENSITY AS A FUNCTION OF DISTANCE AND ANGLE OFF AXIS

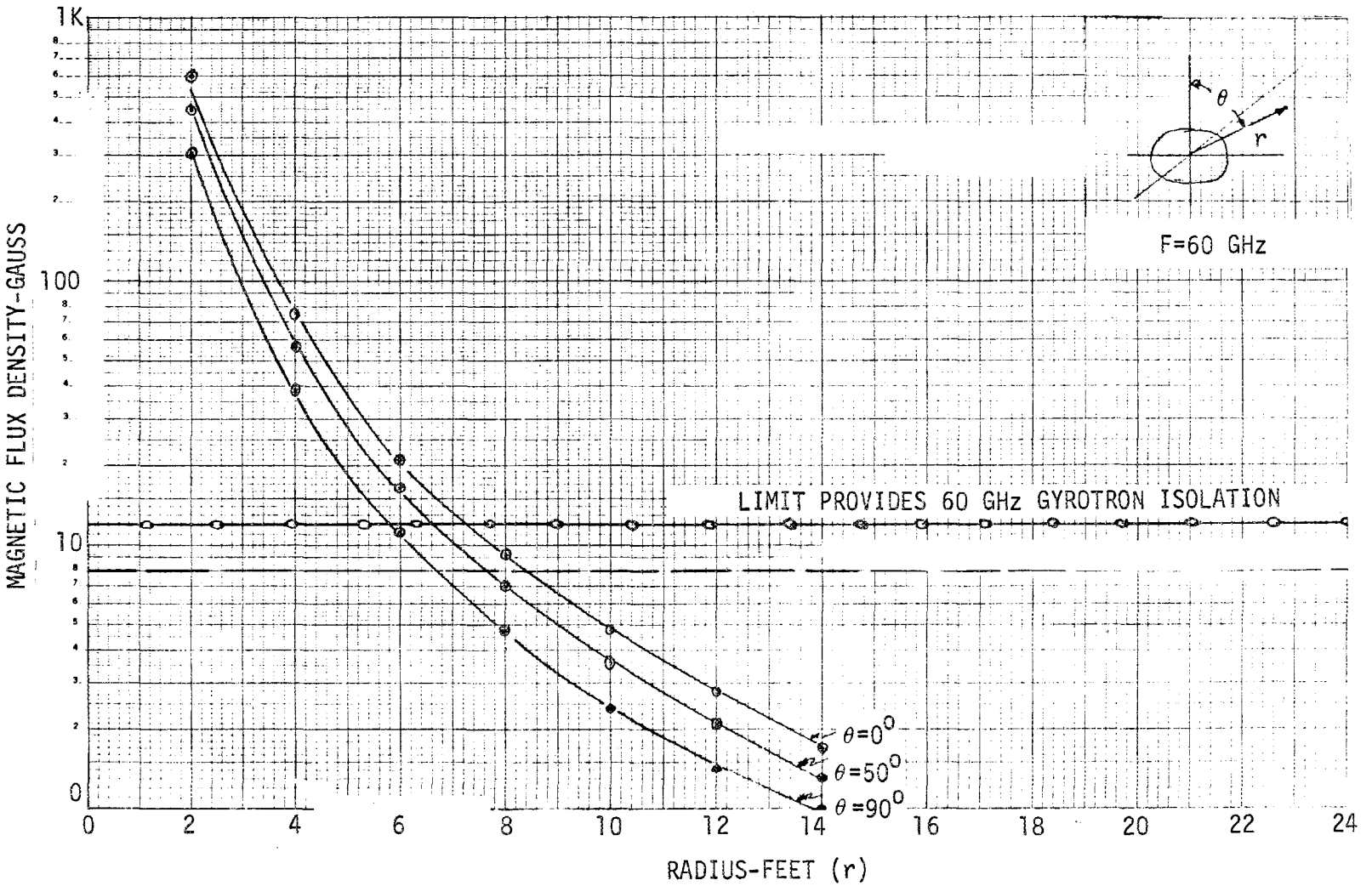

5.3 X-RAY EFFECTS ON GYROTRON AND GYROTRON MOUNT FABRICATION MATERIALS

MDAC materials and process people in conjunction with Varian engineering made a study of projected EBT-P x-ray radiation effects on materials used in the fabrication of gyrotrons. The gyrotrons will be located on the level below the torus. The radiation dose level at the ceiling has been estimated to be 3.8 x 10^7 rads maximum. Therefore, the radiation dose seen by the gyrotrons will be somewhat lower. The following list of materials and their radiation resistance are given as guidelines:

- Epoxy Potting In Coils - Epoxies in general are acceptable to 10^8 rads.
- G 10 Glass/Epoxy - The limiting factor is the epoxy, therefore acceptable to about 10^8 rads.
- HV Cables - Insulation materials are being investigated. Cross-linked polyethylene, ethylene, propylene or silicone are candidates.
- Polyester/Glass - Glass filled polyester has radiation resistance to 10^8 rads, perhaps as high as 10^9 rads.
- Acrylic Resins (Lucite) - These are acceptable only to about 10^6 rads.
- FC-75 Hoses - MDAC is looking at radiation properties of the recommended ethylene proplyene material. Ethylene propylene is good to 10^8 rads.
- Alumina or Beryllia - The formation of color centers is a possibility. MDAC is investigating.
- Solide State Devices
- FC-75
- Water hoses

The results of the preliminary investigation did not provide any rationale which would require the gyrotrons to be relocated. Investigation is continuing.

SECTION 6.0 SCHEDULES

The enclosed schedule depicts the EBT-P microwave system milestones and their time relationship to the overall EBT-P program events. The schedule also shows the time relationship between the microwave system design tasks and the operations development program. Included on the schedule are the proposed dates for placement of the microwave system equipment purchase order and corresponding delivery dates.

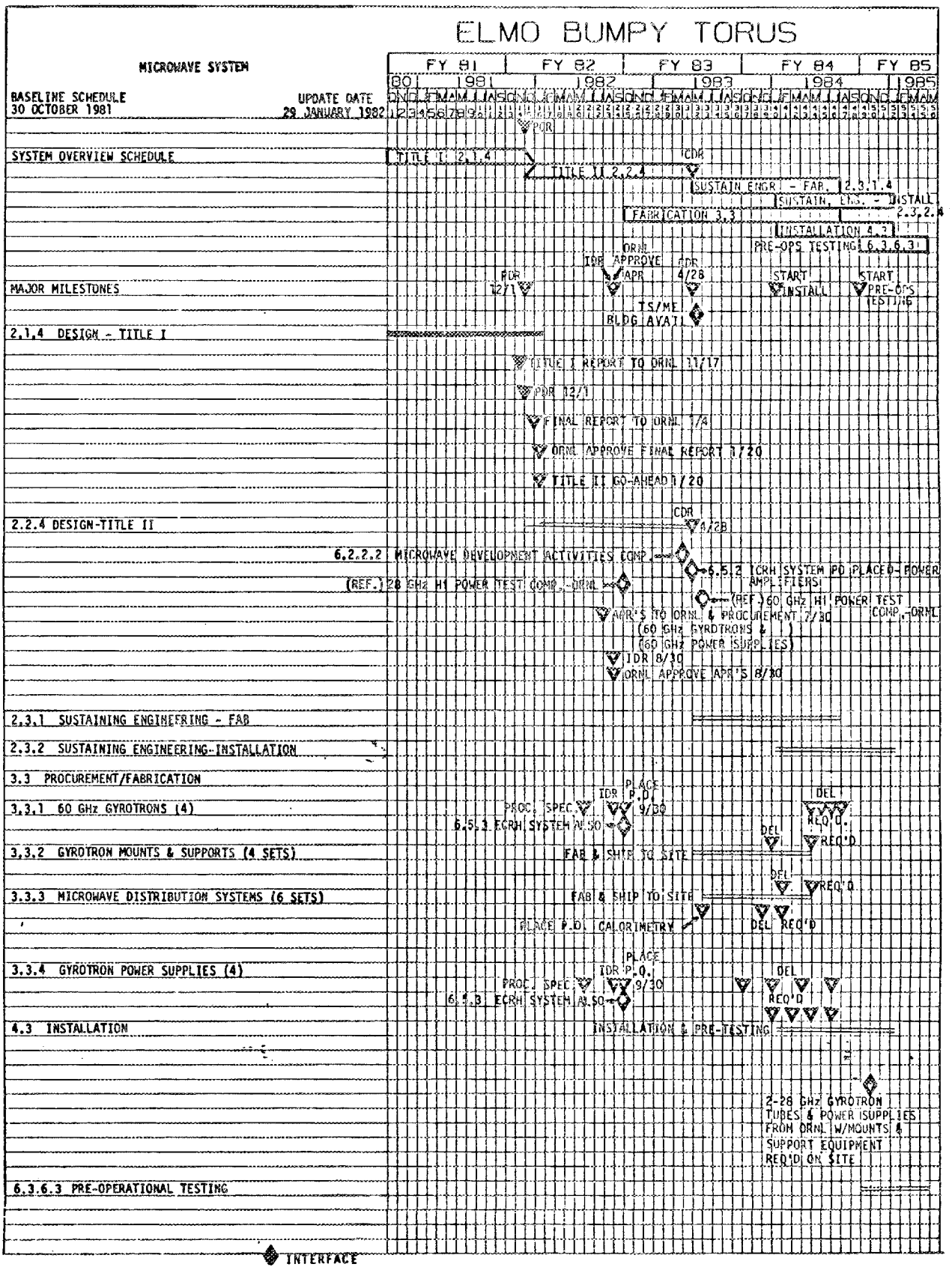
ELMO BUMPY TORUS
MICROWAVE SYSTEM
FY 81
FY 82
FY 83
FY 84
FY 85
1981
1982
1983
1984
1985
BASELINE SCHEDULE
30 OCTOBER 1981
UPDATE DATE
29 JANUARY 1982
PDR
SYSTEM OVERVIEW SCHEDULE
TITLE I 2.1.4
CDR
TITLE II 2.2.4
SUSTAIN ENGR - FAB. 2.3.1.4
SUSTAIN. ENG. - INSTALL 2.3.2.4
FABRICATION 3.3
INSTALLATION 4.3
PRE-OPS TESTING 6.3.6.3
ORNL APPROVE
IDR APPROVE
APR
CDR 4/28
PDR 12/1
START INSTALL
START PRE-OPS TESTING
MAJOR MILESTONES
TS/ME BLDG AVAIL
2.1.4 DESIGN - TITLE I
TITLE I REPORT TO ORNL 11/17
PDR 12/1
FINAL REPORT TO ORNL 1/4
ORNL APPROVE FINAL REPORT 1/20
TITLE II GO-AHEAD 1/20
2.2.4 DESIGN-TITLE II
CDR 4/28
6.2.2.2 MICROWAVE DEVELOPMENT ACTIVITIES COMP.
6.5.2 ECRH SYSTEM PO PLACED-POWER AMPLIFIERS
(REF.) 28 GHz HI POWER TEST COMP. - ORNL
(REF.) 60 GHz HI POWER TEST COMP. - ORNL
APR'S TO ORNL & PROCUREMENT 7/30
(60 GHz GYROTRONS &)
(60 GHz POWER SUPPLIES)
IDR 8/30
ORNL APPROVE APR'S 8/30
2.3.1 SUSTAINING ENGINEERING - FAB
2.3.2 SUSTAINING ENGINEERING-INSTALLATION
3.3 PROCUREMENT/FABRICATION
3.3.1 60 GHz GYROTRONS (4)
PROC. SPEC.
IDR
PLACE P.O. 9/30
6.5.3 ECRH SYSTEM ALSO
DEL REQ'D.
DEL REQ'D
3.3.2 GYROTRON MOUNTS & SUPPORTS (4 SETS)
FAB & SHIP TO SITE
DEL REQ'D
3.3.3 MICROWAVE DISTRIBUTION SYSTEMS (6 SETS)
FAB & SHIP TO SITE
PLACE P.O. CALORIMETRY
DEL REQ'D
3.3.4 GYROTRON POWER SUPPLIES (4)
PROC. SPEC.
IDR
PLACE P.O. 9/30
6.5.3 ECRH SYSTEM ALSO
DEL REQ'D
4.3 INSTALLATION
INSTALLATION & PRE-TESTING
2-28 GHz GYROTRON TUBES & POWER SUPPLIES FROM ORNL W/MOUNTS & SUPPORT EQUIPMENT REQ'D ON SITE
6.3.6.3 PRE-OPERATIONAL TESTING
INTERFACE

7.0 REFERENCES

TRANSFORMER INDUSTRIAL STANDARDS:

National Electrical Code NFPA No 70-1981

ANSI C57.12.00-1980: General Requirements for Liquid-Immersed Distribution, Power and Regulating Transformers.

ANSI C57.12.10-1977: Requirements for Transformers 230 kV and below; 750/862 through 60000 80000/100000 kVA three ϕ

ANSI IEEE C57.12.80-1978: Terminology for Power and Distribution Transformers

ANSI C57.12.91-1978: Dry Type Distribution and Power Transformer Test Code

ANSI/IEEE C57.12.90-1980: Test Code for Liquid-Immersed Distribution Power, and Regulating Transformers and Guide for Short-Circuit Testing of Distribution and Power Transformers.

ANSI/NEMA ST20-1972: Dry Type Transformers for General Applications.

ANSI C57.15-1968: Requirements, Terminology and Test Code for Step-Voltage and Induction Voltage Regulators.

ANSI/IEEE C57.13-1978: Requirements for Instrument Transformers

NEMA ICS 6-110 Enclosures

APPENDIX A

SAFETY CONSIDERATIONS

SAFETY INPUT, EBT-P ECRH SYSTEM

NOTE: Two parts are presented in this section. The first was used by permission of the MFTF-B program and extracted from "Preliminary Technical/Specification Performance Specification for MFTF/B Electron Cyclotron Resonance Heating Power Supply"- Karl Krause, LLNL Document MF-PS-5.10-E-102, 17 June 1981. The second part, lists specific hazards identified by Varian.

Electrical Design Safety Requirements - The Subcontractor's design shall conform to the following general electrical safety requirements:

General Access Areas - All areas to which personnel have free access shall at all times and under all conditions (normal functioning as well as malfunctioning of equipment) be free of direct or indirect electrical hazards.

Direct Electrical Hazard - A potential source of personnel injury resulting from the flow of electrical energy through a person (electrical shocks and burns).

Indirect Electrical Hazard - A potential source of personnel injury resulting from transformed electrical energy into other forms of energy (e.g., radiant energy, such as RF energy, light, heat, energetic particles; mechanical forces such as explosions, acoustic noise, and magnetic fields; and chemical reactions, such as fire and the release of noxious gases and compounds).

High Voltage Equipment - All equipment employing voltages in excess of 600 volts and capable of supplying currents in excess of 10 milliamperes shall be provided with both first-line and backup protection.

First-Line Protection - The primary protective means to prevent personnel access to or contact with energized electrical equipment.

Backup Protection - A secondary, redundant, protective system provided to de-energize a facility to permit safe physical contact by assigned personnel. This system shall be totally independent of the first-line protection and capable of functioning in the event of total failure of the first-line protective system.

Fail-Safe Design - Insofar as is practicable, all first-line protective means shall be fail-safe.

Warning Signs - Suitable warning signs shall be provided on all high voltage equipment, in addition to the foregoing protective measures.

Specific Electrical Safety Design Requirements - The Subcontractor shall conform to the following specific electrical safety design requirements when applicable to the ECRH System.

Enclosures for Hazardous Electrical Equipment - Enclosures shall be adequate to prevent personnel contact with energized circuits and of adequate strength to fully contain flying debris, explosive arcs, and thermal products produced by component failures.

Conductive Enclosures - Enclosures constructed of electrically conductive materials shall have adequate electrical bonding between parts and an adequate ground connection for maximum anticipated fault current.

Interlocking - Easily opened doors and panels shall be interlocked to de-energize circuits and discharge any stored energy sources involved. Interlocks shall be arranged so that equipment cannot be automatically energized by door closure.

Ventilation - Ventilation shall be adequate to prevent overheating and to purge noxious fumes produced by component failures.

Manual Grounding - Manual grounding means such as ground hooks shall be provided in high voltage and energy storage enclosures.

- Ground leads of manual grounding devices shall be visible for their entire length and covered with transparent insulation.

- Grounding points which receive ground hooks for providing maintenance safety shall be clearly identified and provided with suitable receiving hooks.
- Ground hooks not in use shall be hung across enclosure entrances so as to block access to high voltage points whenever practicable. The ground hook when in its stored position shall activate an interlock device to permit equipment to be energized.

Radiation Protection - Enclosures shall provide sufficient attenuation of X-radiation produced by enclosed high voltage vacuum insulated components to ensure a safe personnel working environment. Signs shall be posted to identify X-radiation emitting components contained within enclosures.

High-Voltage Power Vacuum Interrupters shall conform to ANSI Standard C37.85 "Safety Requirements for X-Radiation Limits for ac High-Voltage Power Vacuum Interrupters Used in Power Switchgear".

Foreign Circuits - Local means shall be provided to disconnect foreign circuit power. A foreign circuit is one which could present a shock hazard within the enclosure by being energized from a source which is supplied and controlled by means independent of and separate from the primary power supplied to the enclosure. Components energized from foreign circuits shall be separately enclosed and identified within the enclosure.

Control and Monitoring Systems - Control and monitoring systems shall be designed to be fail-safe to the maximum practicable extent in regard to personnel electrical safety.

Segregation of Safety Wiring - System wiring and interconnections associated with safety functions shall be physically separate from other systems, clearly identified, and protected from damage or tampering by suitable barriers to the maximum practicable extent.

Power Failure - No partial or complete power failures shall result in loss of control to the point of creating hazardous conditions.

Fault Protection - Control and monitoring systems shall have adequate built-in protection to preclude personnel hazards due to high voltages introduced by fault conditions.

Capacitors and Capacitor Banks - Energy storage and filter capacitors and banks of capacitors charged to more than 300 volts and storing more than 15 joules shall conform to the following:

Interlock Protection - Enclosures shall be provided with access interlock systems which automatically discharge stored capacitor energy to a safe level in a time less than that required for entry.

Bleeder Resistors - Automatic discharge of capacitors through two or more separate, permanently connected parallel bleeder resistors shall be provided whenever practicable.

Series Capacitor Protection - Series connected capacitors shall have provisions to discharge each unit individually.

Grounding Resistors - When resistors are used in series with grounding devices, at least two in parallel shall be used to reduce the risk of open-circuit failures.

Fault Current Limiting- Capacitor fault currents shall be limited by fuses or other design means to a level which precludes personnel hazards in the event of failures.

Work Space - Adequate access space shall be provided so as to permit safe working conditions around capacitor bank installations.

Monitoring - Adequate monitoring shall be provided to permit determination of capacitor charge state from outside the enclosure.

Electrical Conductors - High voltage electrical conductors shall be isolated from low voltage conductors by suitable barriers capable of withstanding arcs and forces generated due to insulation failures.

*** Editorial Change**

Safety Grounding - Permanently connected safety groundings such as enclosure grounds shall be provided in a manner which shall not produce ground loops and electrical noise in other portions of the system. Safety grounding shall be devised so as to be in accordance with the safe grounding requirements established for (EBT-P)*.

Human Factors - Human factors shall be considered in conducting the system safety analysis. To the maximum practical extent, the system design shall recognize human limitations and tolerances and avoid design situations which may provide confusion and provoke errors in operations and responses to alarms and malfunction indications. Particular consideration shall be given to the following:

Warning Means - Warning signs, lights, and audible alarms shall be used as needed to warn of hazardous conditions.

- Warning signs shall state the nature of the hazard, its location, and how to eliminate or avoid it.
- Warning lights shall be clearly labeled and of sufficient brightness to be fully visible under ambient lighting conditions. Audible alarms shall provide a signal level which exceeds the highest ambient noise level.

Test Points - Test points shall be easily accessible without exposure to personnel hazards. Test points shall be clearly labeled so as to avoid error or confusion.

Working Clearance - Adequate working clearances shall be provided around electrical equipment. The clearances specified in the OSHA, State of Tennessee, and National Electrical Code cited in (TBD)* are the minimum acceptable criteria. Working areas shall be clear of obstructions likely to cause tripping.

Control Groupings - Controls shall be clustered in logical, accessible groupings to avoid confusion. Emergency off switches shall be distinct in identity and separated from non-emergency controls by a sufficient space to avoid inadvertent operation or difficulty in identification under emergency conditions.

*** Editorial Change**

Mating Parts - Mating parts such as plugs and sockets located in close proximity shall differ physically in such a manner as to preclude incorrect connections. Connectors shall not provide exposed hazardous voltages or permit electrical flashover when energized in the unmated state.

Plug-in Components - Plug-in components having differing characteristics shall also differ physically in such a manner as to preclude incorrect substitution of one for another.

Critical Orientations - Components whose proper physical orientation into equipment is critical to proper operation shall be keyed or otherwise designed so as to physically preclude incorrect orientation.

Inductive Elements - Inductive elements storing more than 15 joules shall conform to the following:

Discharge Means - Automatic discharging means such as resistors, free-wheeling diodes, or non-linear resistors shall be provided to safely dissipate stored energy when current flow is interrupted. Induced voltage during discharge shall be limited to a value which can be safely withstood by the insulation of the inductive element as well as all other interconnected devices which are stressed by the induced voltage.

Mechanical Strength - Adequate mechanical supports and bracing shall be provided to withstand both normal and fault conditions.

Interrupting Means - Devices such as fuses, circuit breakers, or contactors intended to interrupt current flow to inductive elements under normal and/or fault-conditions shall be rated to withstand the sum of the maximum induced voltage and the normal circuit voltage.

Stray Magnetic Fields - The magnitude of stray magnetic fields generated by the ECRHPSS** shall be determined and, where appropriate, adequate precautions such as shielding, personnel exclusions, and warning signs shall be provided.

** **ECRH PSS Electron Cyclotron Resonant Heating Power Supply Subsytem**

Induced Eddy Currents - Where inductive elements have time-varying fields, induced eddy current effects shall be considered and adequate provisions made for consequent mechanical forces and thermal effects.

Grounding - Safety grounding of all exposed conductive parts of inductive devices shall be provided. When, for technical reasons, permanent grounding cannot be allowed, personnel isolation during operation shall be provided by suitable barriers and provisions shall be made to automatically apply safety grounding when personnel access is permitted.

Codes and Standards - The Subcontractor's design shall meet the design safety requirements of all applicable codes and standards cited in (TBD)* of this specification.

SPECIFIC HAZARDS

GYROTRON ELECTROMAGNET SOCKET ASSEMBLY VYW-8000

WARNING

THE VYW-8000 ELECTROMAGNET CANNOT BE HANDLED MANUALLY! LIFT USING THE LIFTING EYEBOLTS PROVIDED. PERSONAL INJURY AND/OR DAMAGE TO THE ELECTROMAGNET MAY OCCUR IF A SUITABLE HOIST IS NOT CAREFULLY USED.

WARNING

MAGNET STRUCTURE MUST BE CONNECTED TO THE SYSTEM AND EARTH "GROUND POTENTIAL" IN ORDER TO INSURE PERSONNEL SAFETY AND PROPER OPERATION.

*** Editorial Change**

WARNING

MAGNET CAN BE ENERGIZED WITH OR WITHOUT TUBE IN PLACE, BUT **NOT** DURING INSTALLATION OF THE TUBE. MAGNETIC MATERIAL MAY BE STRONGLY ATTRACTED TO THE TOP OF THE MAGNET IF THE TUBE IS NOT INSTALLED, CAUSING A PERSONNEL HAZARD.

Gyrotron Tube - Proper use and safe operating practices with respect to microwave tubes are the responsibility of equipment manufacturers and users of such tubes. Varian provides information on its products and associated hazards, but it assumes no responsibility for after-sale operating and safety practices. Limited life and random failures are inherent characteristics of electron tubes. Take appropriate action through redundancy or other safeguards to protect personnel and property from the consequences of tube failure.

All persons who work with or are exposed to microwave tubes or equipment which utilizes such tubes must take precautions to protect themselves against possible serious bodily injury. Do not be careless around such products.

Operating Instructions - This sheet, the Test Performance Sheet and the Operating Instructions can help you to operate this tube safely and efficiently. **READ THEM.** The Test Performance Sheet is a record of individual product test conditions and test results at the factory. Special operating considerations and precautions will be found in the Operating Instructions. Uniformed or careless operation of this tube can result in poor performance, damage to the tube or other property, serious bodily injury and, possibly death.

Address written questions regarding tube operation to the Manager, Tube Sales, Varian.

WARNING - SERIOUS HAZARDS EXIST IN THE OPERATION OF MICROWAVE TUBES

The operation of microwave involves one or more of the following hazards, any one of which, in the absence of safe operating practices and precautions, could result in serious harm to personnel:

a. **High Voltage** - Normal operating voltages can be deadly.
b. **RF Radiation** - Exposure to rf radiation may cause serious bodily injury possible resulting in blindness or death. Cardiac pacemakers may be affected.
c. **X-Ray Radiation** - High Voltage tubes can produce dangerous, possibly fatal, x-rays.
d. **Beryllium Oxide Poisoning** - The dust or fumes from beryllium oxide (BeO) ceramics used in microwave tubes are highly toxic and can cause serious injury or death.
e. **Corrosive and Poisonous Compounds** - If a dielectric gas is used in the external waveguide or around the high voltage bushing portions of microwave tubes, highly toxic or corrosive compounds may be produced by either RF voltage breakdown or high voltage DC breakdown.
f. **Implosion Hazard** - Ceramic windows in microwave tubes can shatter on impact or crack in use, possibly resulting in injury from flying particles or from beryllium oxide (BeO) dust or fumes.
g. **Hot Coolant and/or Steam** - The electron collector and water used to cool it reach scalding temperatures. Touching or rupture of the cooling system can cause serious burns.
h. **Hot Surfaces** - Surfaces of air-cooled collectors and other parts of tubes can reach temperatures of several hundred degrees centigrade and cause serious burns if touched.

Additional specific information about microwave tube hazards:

High Voltage - Many microwave tubes operate at voltages high enough to kill through electrical shock. Design equipment utilizing these tubes to prevent personnel contact with

high voltages. Securely attach prominent hazard warnings. Personnel should always break the primary circuits of the power supply and discharge high voltage condensers when direct access to the tube is required.

Radio Frequency Radiation - Exposure of personnel to rf radiation should be minimized. Personnel should not be permitted in the vicinity of open energized waveguides or energized antennas. It is generally accepted that exposure to "high levels" of rf radiation can result in severe bodily injury including blindness. Cardiac pacemakers may be affected.

The effect of prolonged exposure to "low-level" rf radiation continues to be a subject of investigation and controversy. While there continues to be support for lower limits, it is generally agreed among official standard-setting groups in the U.S. that prolonged exposure of personnel to rf radiation at frequencies of 10 MHz - 100 GHz should be limited to average power densities of ten milliwatts per square centimeter (10 mW/cm^2) or lower, using any possible one tenth of an hour (.1 hour) as the averaging period. It is also generally agreed that exposure should be reduced in working areas where temperatures are above normal. The 10 mW/cm^2 average levels has been adopted by several U.S. Government agencies including the Occupational Safety and Health Administration (OSHA) as the standard or protection guide for employee work places.

All input and output rf connections, waveguides, flanges and gaskets must be rf leak-proof. Never operate a microwave tube without a properly matched rf energy absorbing load attached. Never look into or expose any of the body to an antenna or open waveguide while the tube is energized. Monitor the tube and rf system for rf radiation leakage at regular intervals and after servicing.

X-Ray Radiation - As voltages increase beyond 15 kilovolts metal-body tubes are capable of producing progressively more dangerous X-ray radiation. Provide adequate X-ray shielding on all sides of these tubes, particularly the cathode and collector ends, as well as the modulator and pulse transformer tanks. Check X-ray levels. Never operate high voltage tubes without adequate X-ray shielding in place. Monitor the tube after servicing and at regular intervals for possible changes in X-ray levels due to aging.

Danger - Beryllium Oxide Ceramics (BeO) Avoid Breathing Dust or Fumes - Some microwave tubes contain beryllium oxide (BeO) ceramics; usually the output waveguide window or around the cathode. Do not perform any operations on BeO ceramics which produce dust or fumes; for example, grinding, grit blasting, and acid cleaning. Beryllium oxide dust and fumes are highly toxic and breathing them can result in serious personal injury or death. If a broken window is suspected, carefully remove the tube from its waveguide and seal the output flange of the tube with tape. Because BeO warning labels may be obliterated or removed, we urge you to contact Varian before performing any work on ceramics in any Varian microwave tube. Some tubes have BeO internal to the vacuum envelope.

Take precautions to protect personnel working in the disposal or salvage of tubes containing BeO. All such personnel should be made aware of the deadly hazards involved and the necessity for great care and attention to safety precautions. Varian will dispose of tubes without charge provided they are returned to Varian freight prepaid, with a written request for disposal by Varian.

Corrosive and Poisonous Compounds - External output waveguides and cathode high voltage bushings of microwave tubes are sometimes operated in systems that use a dielectric gas to impede microwave or high voltage breakdown. If breakdown does occur, the gas may decompose and combine with impurities, such as air or water vapor, to form highly toxic and corrosive compounds. Examples are Freon gas which may form LETHAL PHOSGENE, and sulfur hexafluoride (SF_6) gas which may form highly toxic and corrosive sulfur or fluorine compounds such as BERYLLIUM FLUORIDE. When breakdown does occur in the presence of these gases, ventilate the area to outside air, avoid breathing any fumes or touching any liquids which develop, take precautions appropriate for beryllium compounds and for other highly toxic and corrosive substances, before permitting personnel to perform any work on or near the tube. If a coolant other than pure water is utilized follow the precautions supplied by the coolant manufacturer.

Implosion Hazard - Due to the internal vacuum in microwave tubes the glass or ceramic output window can shatter inward (implode) if struck with a hard object or subjected to

mechanical shock. Flying debris could result in bodily injury, including cuts and puncture woulds and, if made of beryllium oxide ceramic, produce highly toxic dust or fumes. Do not breathe such dust or fumes.

Hot Coolant and/or Steam - Extreme heat occurs in the electron collector portion of microwave tubes during operation. Coolant channels used for cooling also reach high temperatures (as high as boiling, 100°C or above), and the hot coolant is under pressure (typically as high as 100 psi). Some collectors are cooled by boiling the coolant and forming steam.

A rupture of the coolant channel or the coolant or steam line or other contact with hot portions of this tube could scald or burn. Carefully check that all fittings and connections are secure and monitor backpressure for changes in cooling system performances. Replace any defective fittings and tighten any loose fittings or components. If backpressure is increasing above normal operating values shut the system down and clear the restriction.

Hot Surfaces - The electron collector portion of microwave tubes is often air-cooled or conduction-cooled. The air-cooled external surface normally operates at a high temperature (typically 200° to 300°C). Other portions of the tube may also reach high temperatures, especially the cathode insulator and the cathode/heater surfaces. All hot surfaces may remain hot for an extended time after the tube is shut off. To prevent serious burns, take care to prevent and avoid any bodily contact with these surfaces both during and for a reasonable cool-down period after tube operation.

WARNING

DO NOT ATTEMPT TO OPERATE THIS TUBE UNTIL IT HAS BEEN DETERMINED THAT ALL PRECAUTIONS HAVE BEEN TAKEN TO PROTECT PERSONNEL FROM ALL HAZARDS. PROTECTIVE DEVICES SUCH AS SHIELDS AND INTERLOCKING SWITCH CIRCUITS MUST BE IN OPERATION. REREAD AND COMPLY WITH ALL PRECAUTIONS AND PROCEDURES SPECIFIED IN THE "OPERATING HAZARDS" SECTION.

INSTALLATION

WARNING

LIFT OR SUPPORT THE TUBE ONLY BY MEANS OF THE TWO LIFTING EYES AT THE TOP OF THE RED COLLECTOR SHROUD OR BY THE SUPPORT PLATE AT THE BASE OF THE RED COLLECTOR SHROUD. LIFTING FORCE SHOULD NEVER BE APPLIED BY MEANS OF THE OUTPUT WAVEGUIDE CONNECTOR AT THE TOP OF THE TUBE OR BY THE GUN INSULATORS OR SOCKET CONNECTING HARDWARE AT THE BOTTOM. LIFT CAREFULLY USING A SUITABLE HOIST. THE TUBE MAY BE DAMAGED AND/OR PERSONAL INJURY MAY OCCUR IF THESE PRECAUTIONS ARE NOT TAKEN.

CONNECTIONS

WARNING

THE VACION® POWER SUPPLY IS CAPABLE OF DELIVERING OVER 3000 VOLTS UNDER OPEN CIRCUIT CONDITIONS. DO NOT ALLOW CABLE TO BECOME DAMAGED, AND DO NOT HANDLE IT WITH THE VOLTAGE TURNED ON.

OPERATION

WARNING

DO NOT ATTEMPT TO OPERATE THIS TUBE UNTIL IT HAS BEEN DETERMINED THAT ALL PRECAUTIONS HAVE BEEN TAKEN TO PROTECT PERSONNEL FROM ALL HAZARDS. PROTECTIVE DEVICES SUCH AS SHIELDS AND INTERLOCKING SWITCH CIRCUITS MUST BE IN OPERATION. REREAD AND COMPLY WITH ALL PRECAUTIONS AND PROCEDURES SPECIFIED IN THE "OPERATING HAZARDS" SECTION.

Preliminary Check - Check the following conditions before applying voltages to the tube.

1. Collector is connected to supply correctly.
2. Tube body and magnet are grounded.
3. Electromagnet connected correctly.
4. Waveguide are protective circuitry and all interlocks operating correctly.
5. Waveguide system connected to gyrotron output flange.

6. Tube and electromagnet coolants are flowing.
7. Valcon® pump connected correctly.
8. Verify that all x-ray shields are in place, particularly on the output waveguide.
9. Oil pump that supplies gun cooling oil is operating.

WARNING

HIGH VOLTAGE - VOLTAGES' REQUIRED FOR OPERATION OF THIS TUBE ARE EXTREMELY DANGEROUS TO LIFE; EQUIPMENT MUST BE DESIGNED WITH PROTECTIVE INTERLOCK CIRCUITS TO MAKE PHYSICAL CONTACT WITH THESE VOLTAGES IMPOSSIBLE. SEE OPERATING HAZARDS SECTION.

WARNING

X-RAYS - THIS TUBE PRODUCES DANGEROUS X-RADIATION DURING OPERATION. THE EQUIPMENT IN WHICH THIS TUBE IS USED MUST PROVIDE ADEQUATE X-RAY SHIELDING AROUND THE TUBE, INCLUDING THE GUN REGION, FOR THE PROTECTION OF PERSONNEL. BOTH TUBE AND SYSTEM MUST NEVER BE ALTERED IN ANY WAY WHICH MIGHT DECREASE SHIELDING. RADIATION LEVELS SHOULD BE CHECKED PERIODICALLY TO ENSURE SAFE OPERATING CONDITIONS AND COMPLIANCE WITH STATUTORY AND REGULATORY REQUIREMENTS. NEVER APPLY BEAM VOLTAGES WITHOUT HAVING X-RAY SHIELDING IN

PLACE. X-RAYS ARE DEADLY AND CANNOT BE DETECTED EXCEPT WITH SPECIAL EQUIPMENT. SERIOUS EXPOSURE MAY OCCUR WITHOUT PERSONNEL BEING AWARE. SERIOUS PERSONAL INJURY OR DEATH MAY OCCUR AT SOME LATER DATE AS A CONSEQUENCE.

WARNING

RF RADIATION - THIS TUBE IS DESIGNATED TO PRODUCE HIGH ENERGY RF RADIATION. EVEN LOW LEVELS OF RF RADIATION CAN BE HAZARDOUS TO HUMAN HEALTH. PRECAUTIONS MUST BE TAKEN TO PREVENT EXPOSURE OF PERSONNEL TO THE STRONG RF FIELDS GENERATED BY THIS TUBE. RF RADIATION DUE TO LEAKAGE AT THE WAVEGUIDE FLANGE SHOULD BE PREVENTED BY MAKING GOOD RF OUTPUT CONNECTIONS. NEVER OPERATE THIS TUBE WITHOUT HAVING AN APPROPRIATE ENERGY ABSORBING LOAD ATTACHED. NEVER LOOK INTO AN OPEN WAVEGUIDE OR ANTENNA WHILE THIS TUBE IS ENERGIZED.

APPENDIX B

28 GHZ GYROTRON PRELIMINARY SPECIFICATION

PRELIMINARY

28 GHZ GYROTRON OSCILLATOR (CW)

SPECIFICATION

(VARIAN)*

Varian Part #	Description
VGA-8000	• 28 GHz Gyrotron Oscillator • Operating Hazards
VYW-8000	• Focusing Magnet (For 28 GHz Gyrotron) • Operating Instructions
VCA-8000	28 GHz Arc Detector
VFA-8000A4	28 GHz Microwave Mode Filter
VLA-8000	28 GHz C. W. Waterload

---

* **NOTE: The contents of this section are from current Varian Associates Product specifications.**

TENTATIVE SPECIFICATION

TYPE VGA-8000

GYROTRON OSCILLATOR

The VGA-8000 is a cyclotron resonance interaction oscillator. The tube produces 200 kilowatts of CW power output at 28 GHz. It is liquid cooled and solenoid focused.

I. ELECTRICAL OPERATING PARAMETERS

Electrical Operating Parameters	Minimum	Maximum	Typical
Beam Voltage	70	90	80 kV
Beam Current	6	10	8 A
Collector Dissipation	—	700	640 kW
Gun Control Anode (with respect to cathode)	20	40	30 kV
Heater Voltage (AC)	6	13	9 V
Heater Current	4	8	6 A
Heater Power	37	96	64 W
Body Current	—	80	20 mA
Gun Anode Current	—	10 mA	1.0 mA
Power Output	200	—	210 kW
Efficiency	30%	50%	40%

II. POWER OUTPUT SENSITIVITIES

Gun Control Anode Voltage	0.6 dB/%
Main Magnet Current	1.5 dB/%
Gun Magnet Current	0.3 dB/%
Heater Voltage	0.6 dB/%
Beam Voltage	0.6 dB/%

III. BEAM CURRENT CONTROL

The operating beam current is controlled by varying the heater voltage (or current). Either regulation of heater voltage or servo control with beam current sensing is recommended. The heater time constant for beam current control is 40-60 sec.

IV. MAGNETIC FIELD REQUIREMENTS

The main magnet assembly VYW-8000 is a shielded solenoid which produces 11,000 g. It has four windings which require up to 600 A dc at 30 V each. Total magnet power is 73 kW maximum. The four magnet supplies should be separately adjustable over a range of at least $\pm 20\%$ about 500A. A current regulation of 10^{-3} is recommended. Two additional coils are used in the cathode region. each coil requires a 10-15 A, 20-35 V dc adjustable power supply with 10^{-3} regulation. An additional magnet assembly VYW-8001 is needed for the collector region. It has three coils: one of which requires .75A at 40V., the remaining two required 2.0 A at 100 V. 1.0% regulation is sufficient.

V. COOLING REQUIREMENTS

Deionized water cooling is required as follows:

	FLOW RATE gpm	PRESSURE DROP psi
Tube Collector	200-400	120-140
Tube Body	15-20	75-140
Collector seal	2-3	18-24
Magnet	17	100
Output Water Load	40-80	205

The cathode end of the tube is designed to be operated in oil for both voltage holdoff and cooling. An oil flow of 0.3 gpm or more at 5 psi is required to cool the gun. A small submersible oil pump is recommended to supply this flow.

The output window requires FC-75 cooling of 2 to 4 gpm with a differential pressure of 8 to 20 psi. Absolute pressure at the window should never exceed 30 psig.

VI. LOAD MISMATCH

If mismatches are present in the 2.5 inch output waveguide a reduction in power output can be expected. VSWRs, as defined by power reflection, of 1.5:1 and 2:1 result in power reductions of 10% and 30% respectively. Some adjustment in operating parameters may be required to optimize the output in the presence of mismatches.

VII. MECHANICAL PARAMETERS

Size and Weight:

Magnet -The magnet system is composed of two assemblies. The VYW-8000 magnet assembly contains the main field coils and the gun coils. The latter are immersed in oil. Located immediately above the VYW-8000 is the VYW-8001 collector magnet assembly which contains three collector coils. The combined assemblies extend 12 inches below the oil and 56 inches above it. The maximum diameter, including water manifolding is 28 inches. The electrical connection assembly extends to 21 inches radius on one side. The total weight of the two assemblies is approximately 1300 pounds.

Tube - 100 inches long 16 inches diameter, at maximum point. Weight is 520 pounds.

Operating Position:

The tube is designed to operate with its axis vertical with the gun down. The output waveguide comes out vertically at the top of the tube.

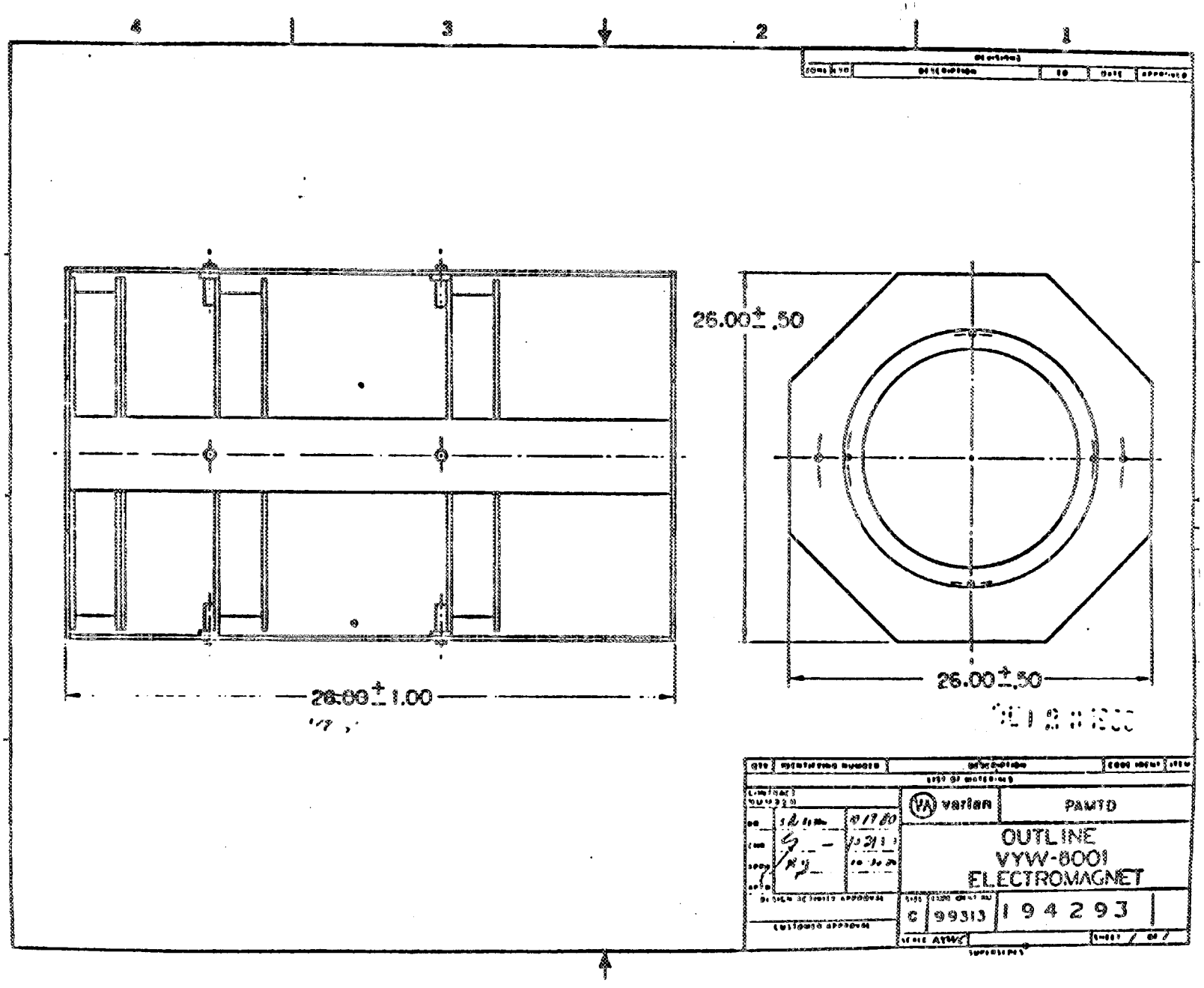
4
3
2
1
26.00 ± .50
26.00 ± 1.00
26.00 ± .50
varian
PAMTD
OUTLINE
VYW-8001
ELECTROMAGNET
C
99313
194293

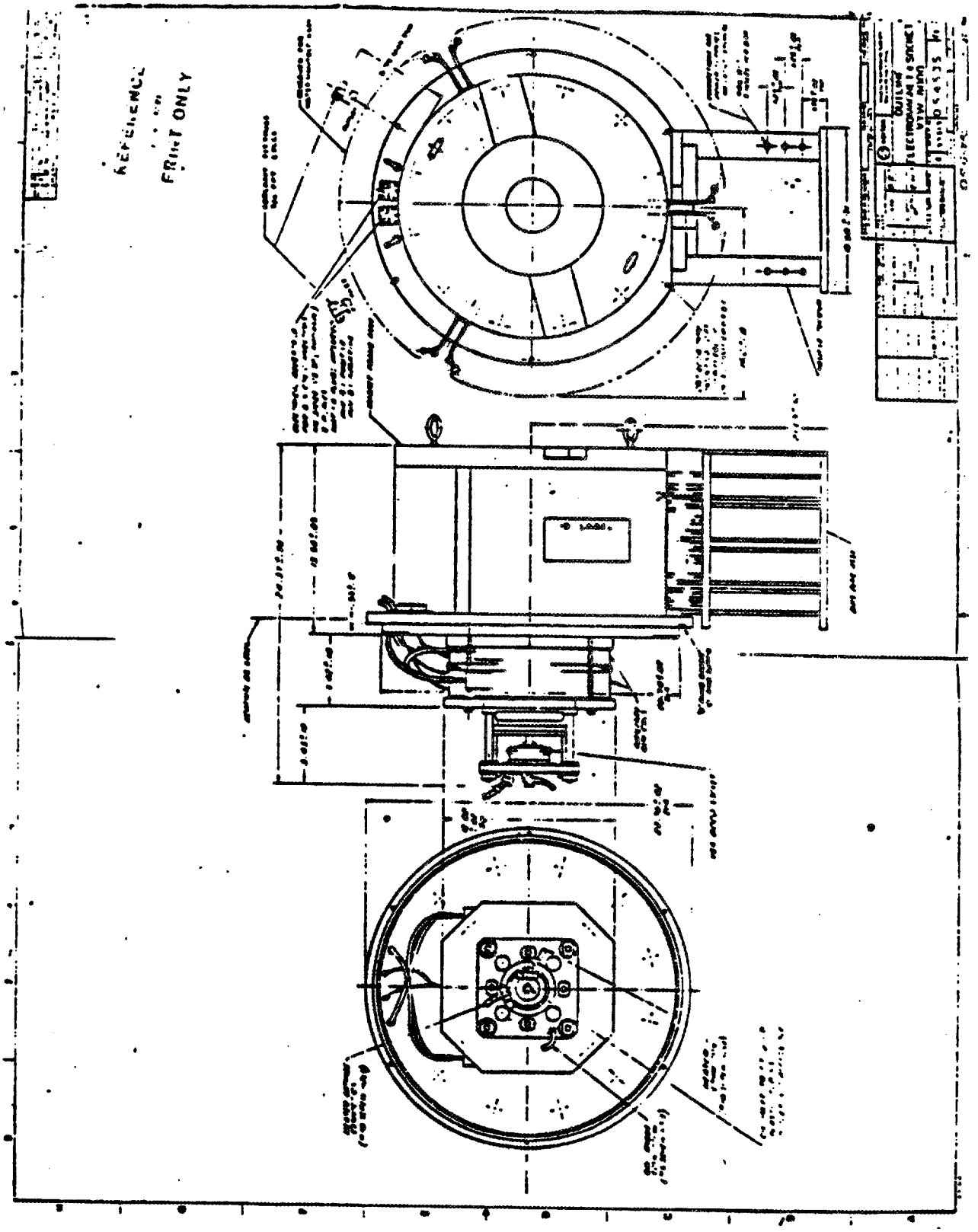
REFERENCE
PRINT ONLY

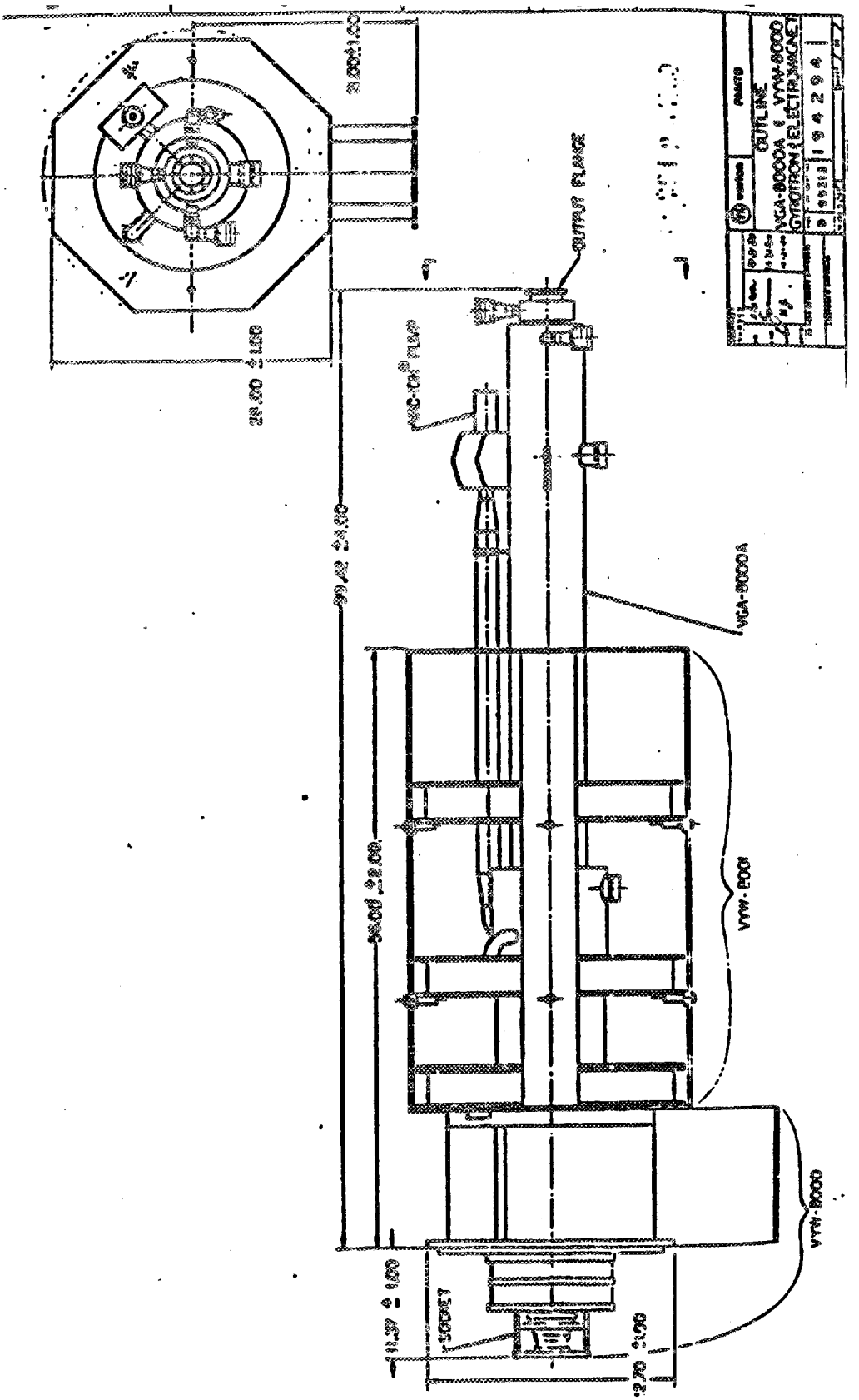
OUTLINE
VGA-8000A & VYW-8000
GYROTRON (ELECTRO-MAGNET)
OUTPUT FLANGE
VGA-8000A
VYW-8001
VYW-8000
SOCKET

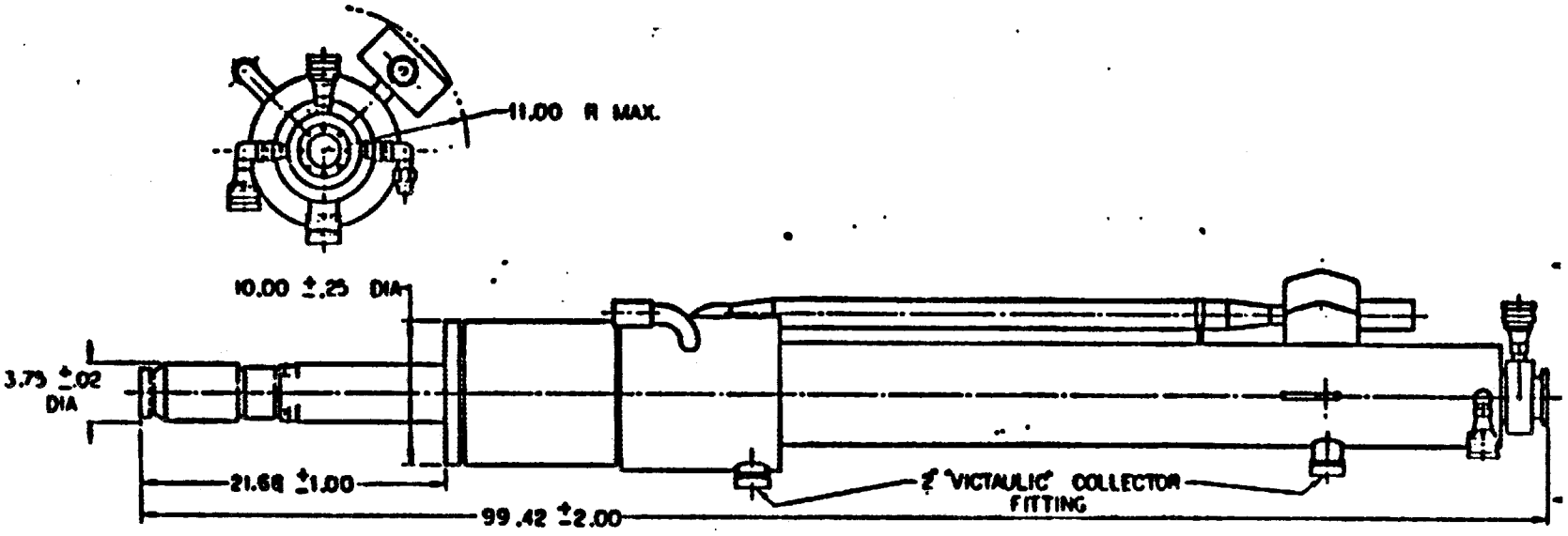
11.00 R MAX.
10.00 ±.25 DIA
3.75 ±.02
DIA
21.68 ±1.00
99.42 ±2.00
"VICTAULIC" COLLECTOR
FITTING

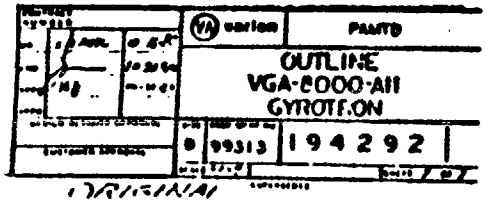
varian
OUTLINE
VGA-8000-AII
GYROTRON
99313
194292

OPERATING HAZARDS

READ THIS SHEET AND TAKE ALL SAFETY PRECAUTIONS

Proper use and safe operating practices with respect to microwave tubes are the responsibility of equipment manufacturers and users of such tubes. Varian provides information on its products and associated hazards, but it assumes no responsibility for after-sale operating and safety practices. Limited life and random failures are inherent characteristics of electron tubes. Take appropriate action through redundancy or other safeguards to protect personnel and property from the consequences of tube failure.

All persons who work with or are exposed to microwave tubes or equipment which utilizes such tubes must take precautions to protect themselves against possible serious bodily injury. Do not be careless around such products.

Operating Instructions - This sheet, the Test Performance Sheet and the Operating Instructions can help you to operate this tube safely and efficiently. **READ THEM.** The Test Performance Sheet is a record of individual product test conditions and test results at the factory. Special operating considerations and precautions will be found in the Operating Instructions. Uniformed or careless operation of this tube can result in poor performance, damage to the tube or other property, serious bodily injury and, possibly death.

Address written questions regarding tube operation to the Manager, Tube Sales, Varian.

WARNING - SERIOUS HAZARDS EXIST IN THE OPERATION OF MICROWAVE TUBES

The operation of microwave involves one or more of the following hazards, any one of which, in the absence of safe operating practices and precautions, could result in serious harm to personnel:

a. **High Voltage** - Normal operating voltages can be deadly.
b. **RF Radiation** - Exposure to rf radiation may cause serious bodily injury possible resulting in blindness or death. Cardiac pacemakers may be affected.

c. **X-Ray Radiation** - High Voltage tubes can produce dangerous, possibly fatal, x-rays.
d. **Beryllium Oxide Poisoning** - The dust or fumes from beryllium oxide (BeO) ceramics used in microwave tubes are highly toxic and can cause serious injury or death.
e. **Corrosive and Poisonous Compounds** - If a dielectric gas is used in the external waveguide or around the high voltage bushing portions of microwave tubes, highly toxic or corrosive compounds may be produced by either RF voltage breakdown or high voltage DC breakdown.
f. **Implosion Hazard** - Ceramic windows in microwave tubes can shatter on impact or crack in use, possibly resulting in injury from flying particles or from beryllium oxide (BeO) dust or fumes.
g. **Hot Coolant and/or Steam** - The electron collector and water used to cool it reach scalding temperatures. Touching or rupture of the cooling system can cause serious burns.
h. **Hot Surfaces** - Surfaces of air-cooled collectors and other parts of tubes can reach temperatures of several hundred degrees centigrade and cause serious burns if touched.

Additional specific information about microwave tube hazards:

High Voltage - Many microwave tubes operate at voltages high enough to kill through electrical shock. Design equipment utilizing these tubes to prevent personnel contact with high voltages. Securely attach prominent hazard warnings. Personnel should always break the primary circuits of the power supply and discharge high voltage condensers when direct access to the tube is required.

Radio Frequency Radiation - Exposure of personnel to rf radiation should be minimized. Personnel should not be permitted in the vicinity of open energized waveguides or energized antennas. It is generally accepted that exposure to "high levels" of rf radiation can result in severe bodily injury including blindness. Cardiac pacemakers may be affected.

The effect of prolonged exposure to "low-level" rf radiation continues to be a subject of investigation and controversy. While there continues to be support for lower limits, it is generally agreed among official standard-setting groups in the U.S. that prolonged exposure of

personnel to rf radiation at frequencies of 10 MHz - 100 GHz should be limited to average power densities of ten milliwatts per square centimeter (10 mW/cm^2) or lower, using any possible one tenth of an hour (.1 hour) as the averaging period. It is also generally agreed that exposure should be reduced in working areas where temperatures are above normal. The 10 mW/cm^2 average levels has been adopted by several U.S. Government agencies including the Occupational Safety and Health Administration (OSHA) as the standard or protection guide for employee work places.

All input and output rf connections, waveguides, flanges and gaskets must be rf leak-proof. Never operate a microwave tube without a properly matched rf energy absorbing load attached. Never look into or expose any of the body to an antenna or open waveguide while the tube is energized. Monitor the tube and rf system for rf radiation leakage at regular intervals and after servicing.

X-Ray Radiation - As voltages increase beyond 15 kilovolts metal-body tubes are capable of producing progressively more dangerous X-ray radiation. Provide adequate X-ray shielding on all sides of these tubes, particularly the cathode and collector ends, as well as the modulator and pulse transformer tanks. Check X-ray levels. Never operate high voltage tubes without adequate X-ray shielding in place. Monitor the tube after servicing and at regular intervals for possible changes in X-ray levels due to aging.

Danger - Beryllium Oxide Ceramics (BeO) Avoid Breathing Dust or Fumes - Some microwave tubes contain beryllium oxide (BeO) ceramics; usually the output waveguide window or around the cathode. Do not perform any operations on BeO ceramics which produce dust or fumes; for example, grinding, grit blasting, and acid cleaning. Beryllium oxide dust and fumes are highly toxic and breathing them can result in serious personal injury or death. If a broken window is suspected, carefully remove the tube from its waveguide and seal the output flange of the tube with tape. Because BeO warning labels may be obliterated or removed, we urge you to contact Varian before performing any work on ceramics in any Varian microwave tube. Some tubes have BeO internal to the vacuum envelope.

Take precautions to protect personnel working in the disposal or salvage of tubes containing BeO. All such personnel should be made aware of the deadly hazards involved and the

necessity for great care and attention to safety precautions. Varian will dispose of tubes without charge provided they are returned to Varian freight prepaid, with a written request for disposal by Varian.

Corrosive and Poisonous Compounds - External output waveguides and cathode high voltage bushings of microwave tubes are sometimes operated in systems that use a dielectric gas to impede microwave or high voltage breakdown. If breakdown does occur, the gas may decompose and combine with impurities, such as air or water vapor, to form highly toxic and corrosive compounds. Examples are Freon gas which may form LETHAL PHOSGENE, and sulfur hexafluoride (SF_6) gas which may form highly toxic and corrosive sulfur or fluorine compounds such as BERYLLIUM FLUORIDE. When breakdown does occur in the presence of these gases, ventilate the area to outside air, avoid breathing any fumes or touching any liquids which develop, take precautions appropriate for beryllium compounds and for other highly toxic and corrosive substances, before permitting personnel to perform any work on or near the tube. If a coolant other than pure water is utilized follow the precautions supplied by the coolant manufacturer.

Implosion Hazard - Due to the internal vacuum in microwave tubes the glass or ceramic output window can shatter inward (implode) if struck with a hard object or subjected to mechanical shock. Flying debris could result in bodily injury, including cuts and puncture woulds and, if made of beryllium oxide ceramic, produce highly toxic dust or fumes. Do not breathe such dust or fumes.

Hot Coolant and/or Steam - Extreme heat occurs in the electron collector portion of microwave tubes during operation. Coolant channels used for cooling also reach high temperatures (as high as boiling, 100°C or above), and the hot coolant is under pressure (typically as high as 100 psi). Some collectors are cooled by boiling the coolant and forming steam.

A rupture of the coolant channel or the coolant or steam line or other contact with hot portions of this tube could scald or burn. Carefully check that all fittings and connections are secure and monitor backpressure for changes in cooling system performances. Replace any defective fittings and tighten any loose fittings or components. If backpressure is increasing above normal operating values shut the system down and clear the restriction.

Hot Surfaces - The electron collector portion of microwave tubes is often air-cooled or conduction-cooled. The air-cooled external surface normally operates at a high temperature (typically 200° to 300°C). Other portions of the tube may also reach high temperatures, especially the cathode insulator and the cathode/heater surfaces. All hot surfaces may remain hot for an extended time after the tube is shut off. To prevent serious burns, take care to prevent and avoid any bodily contact with these surfaces both during and for a reasonable cool-down period after tube operation.

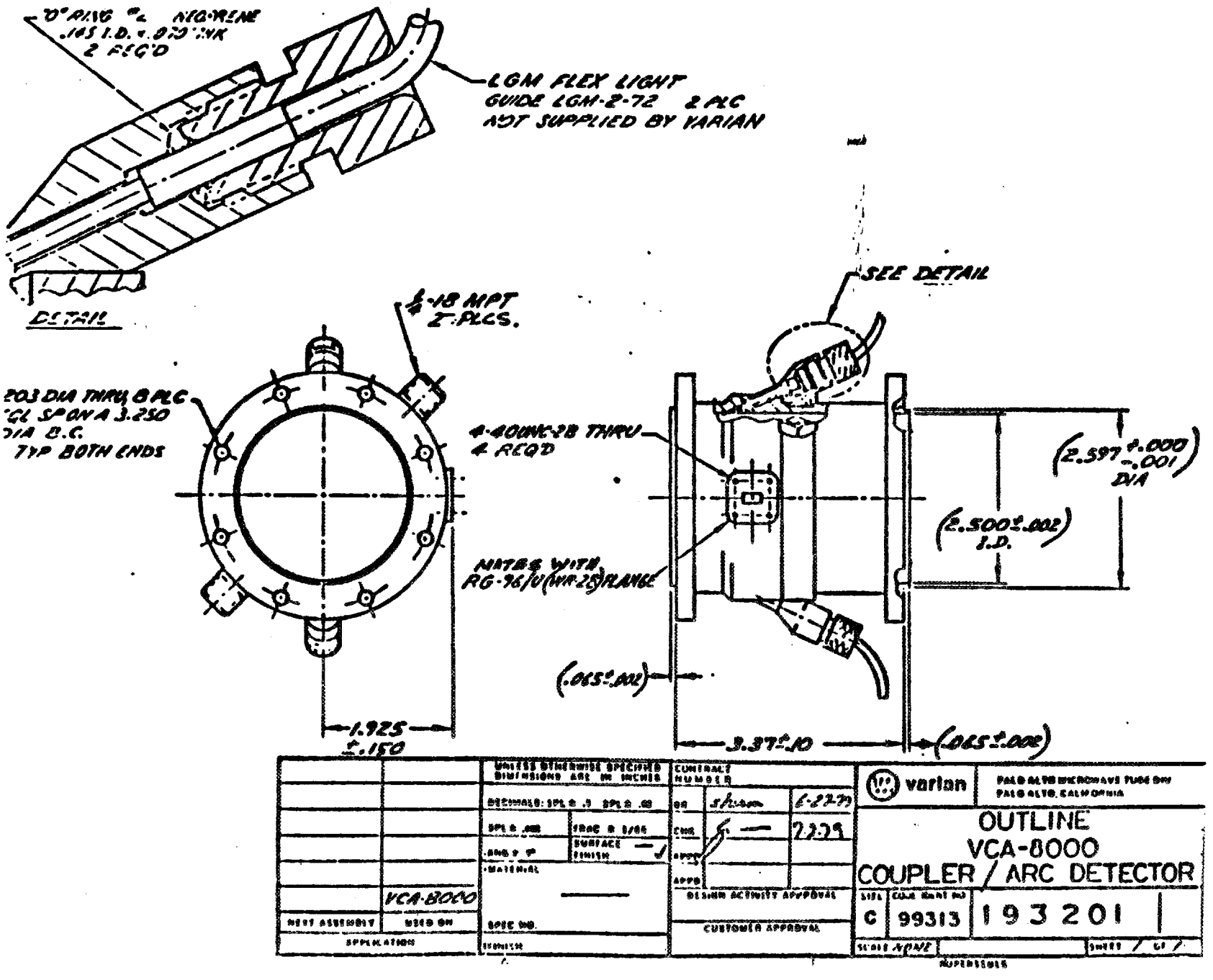
O-RING NEOPRENE
.165 I.D. x .070 WK
2 REQ'D
LGM FLEX LIGHT
GUIDE LGM-2-72 2 PLC
NOT SUPPLIED BY VARIAN
DETAIL
SEE DETAIL
1/4-18 NPT
2 PLCS.
.203 DIA THRU 8 PLC
EQL SP ON A 3.250
DIA B.C.
TYP BOTH ENDS
4-40UNC-2B THRU
4 REQ'D
MATES WITH
RG-96/U (WR-28) FLANGE
(2.597 +.000 -.001)
DIA
(2.500 ±.002)
I.D.
(.065 ±.002)
1.925
±.150
3.37 ±.10
(.065 ±.002)
UNLESS OTHERWISE SPECIFIED DIMENSIONS ARE IN INCHES
DECIMALS: SPL ± .1 SPL ± .03
SPL ± .005
ANG ± 1°
SURFACE FINISH
MATERIAL
VCA-8000
NEXT ASSEMBLY
USED ON
APPLICATION
SPEC NO.
FINISH
CONTRACT NUMBER
DR
CHK
APPD
APPD
DESIGN ACTIVITY APPROVAL
CUSTOMER APPROVAL
varian
PALO ALTO MICROWAVE TUBE DIV
PALO ALTO, CALIFORNIA
OUTLINE
VCA-8000
COUPLER / ARC DETECTOR
SIZE
C
CODE IDENT NO
99313
193201
SCALE NONE
SHEET 1 OF 1
SUPERSEDES

SPECIFICATION

VFA-8000 A4

MICROWAVE MODE FILTER

The VFA-8000 is a 28 GHz water-cooled microwave mode filter. It provides approximately 4db attentuation of all noncircular modes combined.

I. Operating Parameters

Operating Parameters	Minimum	Maximum	Typical
Water flow rate	1 gpm	25 gpm	17 gpm
Pressure drop	—	130 psi	55 psi
Power handling capability	—	50 kW	5 kW
Pulse length	—	up to CW	40 msec
Duty factor	—	up to CW	5%
Attenuation (noncircular modes)	3 db	6 db	4 db
Attenuation (circular modes)	—	—	<.5%
VSWR (noncircular modes)	—	1.5	1.2
VSWR (circular modes)	—	1.2	1.1
Water Temperature ΔT	—	9°c	4°c

II. Mechanical Parameters

Size 4.5" O.D. by 4.25" long

Weight - 9.5 lb.

Water Connections - Hansen Fittings

INSTALLATION AND OPERATING INSTRUCTIONS

FOR THE VFA-8000 A4

To install the VFA-8000 microwave mode filter, remove the waveguide protective covers and bolt it between two waveguides using the eight 10-32 bolt holes provided on each side. Connect the water hoses to the filter. The water input (should be labeled) is the connector closest to the male waveguide side of the filter. For maximum power handling capability, a water system with 130 psi pressure should be used. This allows a 25 gallon per minute water flow rate or approximately 50 kW of power dissipated in the mode filter. A water flow rate less than 5 gpm can be used as long as the water temperature ΔT does not exceed 9°c. It is advised that the water temperature ΔT be constantly monitored to assure that the ΔT never exceeds 9°c.

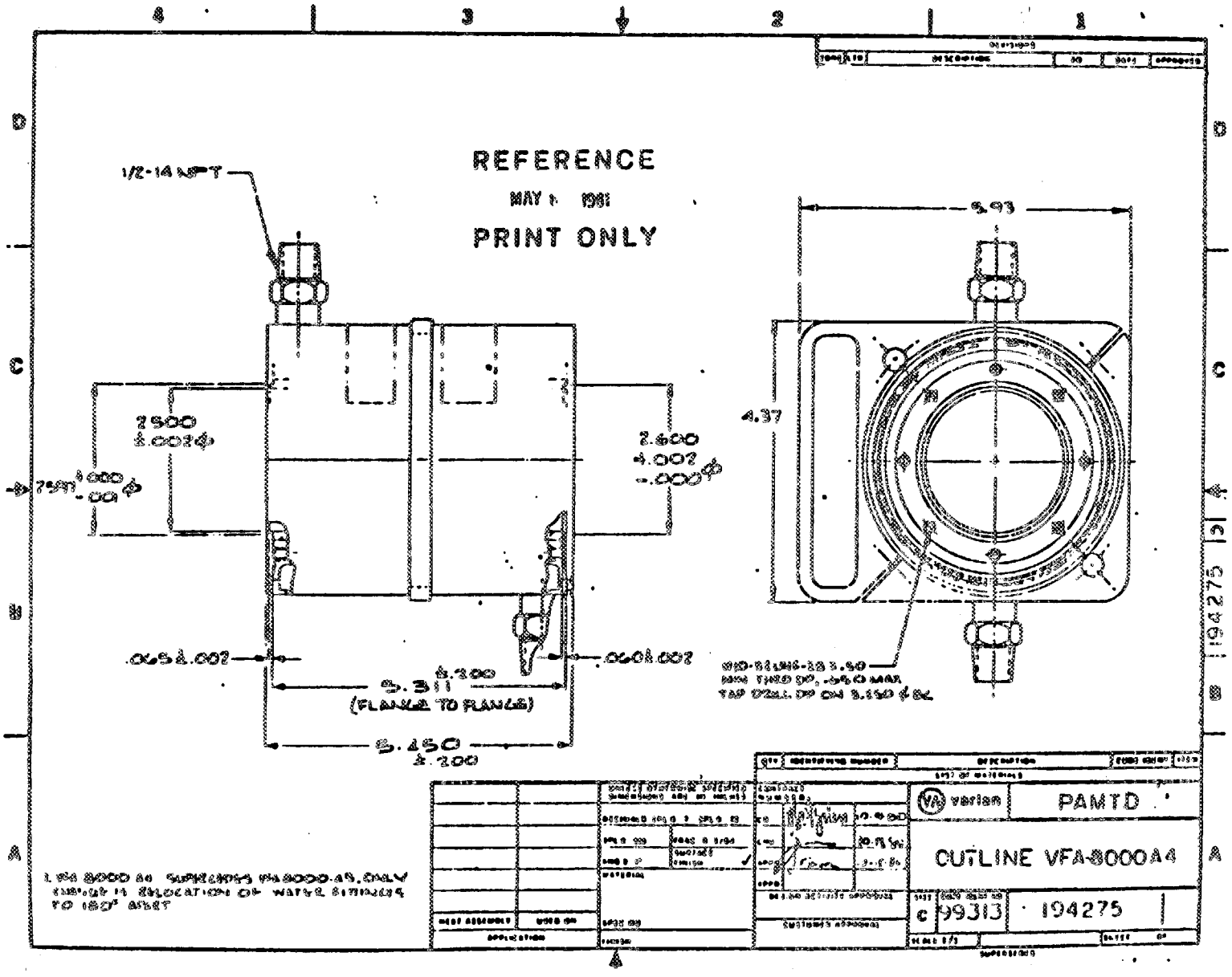
REFERENCE
MAY 1 1981
PRINT ONLY
1/2-14 NPT
2.500
±.002Φ
2.600
±.002
-.000Φ
.065±.002
.060±.002
5.311
(FLANGE TO FLANGE)
5.450
±.200
5.93
4.37
VARIAN
PAMTD
OUTLINE VFA-8000A4
99313
194275

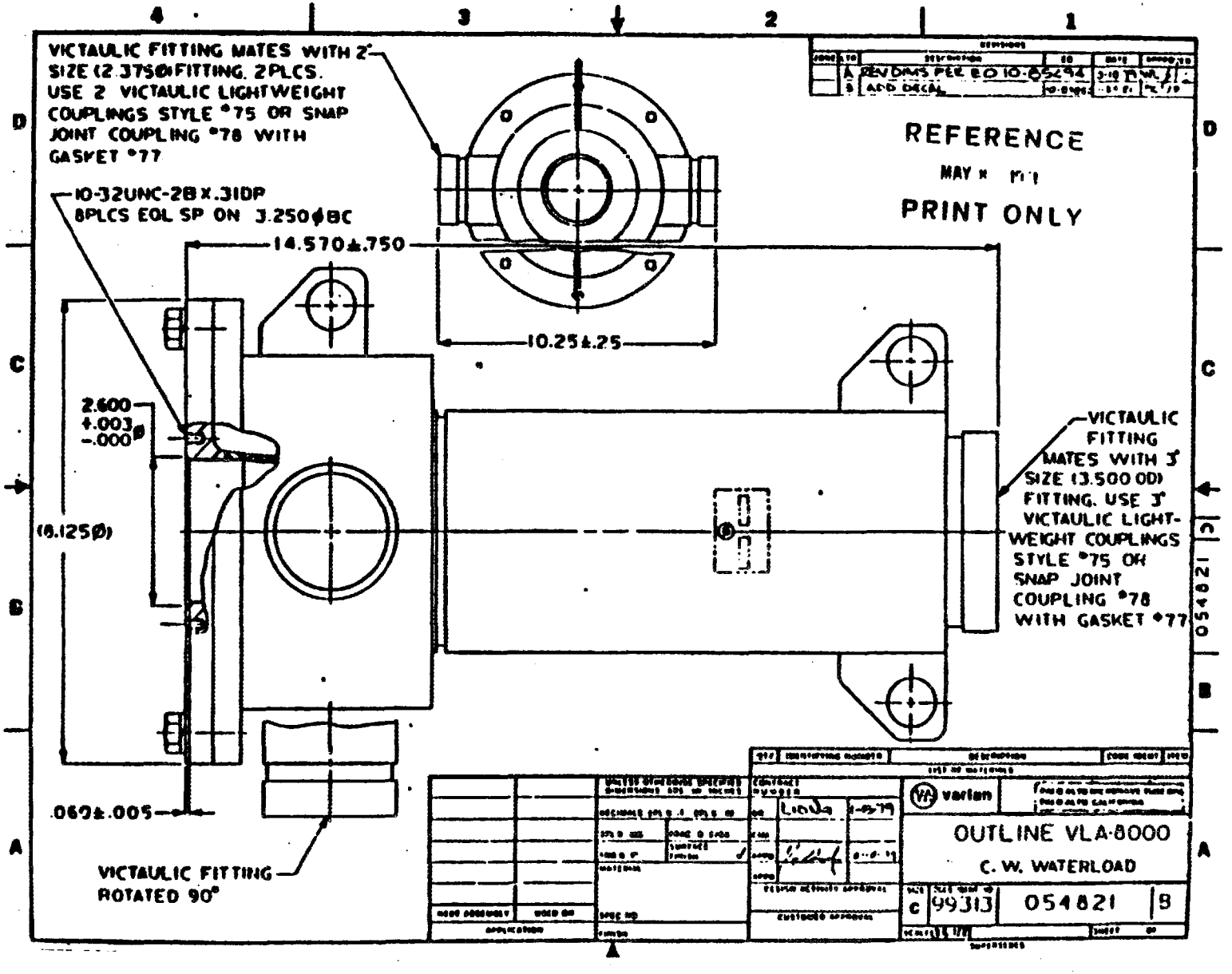
VICTAULIC FITTING MATES WITH 2" SIZE (2.375ØFITTING. 2PLCS. USE 2 VICTAULIC LIGHTWEIGHT COUPLINGS STYLE #75 OR SNAP JOINT COUPLING #78 WITH GASKET #77
10-32UNC-2B X .31DP 8PLCS EQL SP ON 3.250ØBC
14.570±.750
10.25±.25
2.600 +.003 -.000Ø
(8.125Ø)
.060±.005
VICTAULIC FITTING ROTATED 90°
VICTAULIC FITTING MATES WITH 3" SIZE (3.500 OD) FITTING. USE 3" VICTAULIC LIGHT-WEIGHT COUPLINGS STYLE #75 OR SNAP JOINT COUPLING #78 WITH GASKET #77
REFERENCE
PRINT ONLY
varian
OUTLINE VLA-8000
C. W. WATERLOAD
C 99313 054821 B

PRODUCT SPECIFICATION

TYPE VYW-8000 FOCUSING ELECTROMAGNET

Description - Focusing Electromagnet, for use with VGA-8000 (Note 2) and VGA-8050 Gyrotrons. Four Main Coils, Two Gun Coils, Water Cooled, Electrical socket for Gyrotrons included as integral part.

ABSOLUTE RATINGS - Notes 1

Parameters	Isol 1-4	Rmop	T(in)	AP	P	
Units	Ada	Ohms	°C	GPM	psi	psig
Maximum	600	0.06	50	—	135	150
Minimum	—	—	—	17	—	—
Notes	Note 3	Note 4	Note 5	Note 5,6	Note 10	

Test Cond. 1:	**Main Coils**				**Gun Coils**		**Coolant. Q**	**Temp.**
Note 11	#1	#2	#3	#4	#1	#2		
	Isol 1	Isol 2	Isol 3	Isol 4	Isol 5	Isol 6	gpm	°C
	Adc	Adc	Adc	Adc	Adc	Adc		
	150	150	150	150	4.7	3.1	17	Ambient

OPERATION - Note 13

Mounting Position - So that Gyrotron is installed with its major axis vertical, cathode end down.

Electrical Connector - Main Coils - bus-bar terminals. Gun Coils - (2) Amphenol type MS-3102E-12S-3P Receptacles. Mating MS-3106E-125-3S plugs are supplied with each VYW-8000. Gyrotron Socket Electrical Connections - screw-type terminals for wire/lug connections.

Electrical Connections - Per Outline Drawing 054535

Coolant - Deionized Water (Note 6)

Coolant Connectors - Magnet - The mating connections required for both the inlet and outlet are 3/4 inch diameter male threaded-pipe (per American National Standard on Taper Pipe Threads).

Gyrotron Socket - A length of 1/2 inch inside diameter plastic tubing is to be connected to the fitting at the bottom center of the socket (Note 12).

QUALITY CONFORMANCE INSPECTION (PRODUCTION) - Note 7

Test	Conditions				Min	Max	
Insulation Resistance	Non-operating	Main Coil (Top)	#1	R11	1	–	Megohm
	Amb. Temp.		#2	R12	1	–	Megohm
	200 Vdc		#3	R13	1	–	Megohm
	Note 9		#4	R14	1	–	Megohm
		Gun Coil (Top)	#1	R15	1	–	Megohm
			#2	R16	1	–	Megohm
Coolant Pressure Drop	Q = 17 gpm	–	AP	–	120 psi		
Hydrostatic Pressure	Q = 0, P = 150 psig t = 3 minutes, Note B				–	–	OK
Proportional Magnetic Field	TC1	Axial Field		B=	3.15	3.85	kilogauss
		Transverse Field		B_t	–	15	gauss
Coil Voltages at Proportional Currents	TC1	Main Coil (Top)	#1	Ksol 1	–	8.5	Vdc
			#2	Ksol 2	–	8.5	Vdc
			#3	Ksol 3	–	8.5	Vdc
			#4	Ksol 4	–	8.5	Vdc
		Gun Coil (Top)	#1	Ksol 5	–	10.5	Vdc
			#2	Ksol 6	–	7.0	Vdc
Weight		No coolant					
Dimensions		Per Outline Drawing DS4535					

Note 1: The absolute ratings are values which are not to be exceeded under any service condition. These ratings are limiting values outside which the serviceability of any individual unit may be impaired. In order not to exceed absolute ratings, the designer has the responsibility of determining an average design value for each rating below the absolute value of that rating by a safety factor so that the absolute values will never be exceeded under usual conditions of supply-voltage variations, load variation, or manufacturing variations in the equipment itself. It does not necessarily follow that any combination of absolute maximum ratings can be attained simultaneously.

Bt Magnetic Field, Transverse
Bz ..... Magnetic Field, Axial
Ksol ..... Voltage Drop, Coil
Isol ..... Current, Coil
P ..... Hydrostatic Pressure
AP ..... Pressure Drop
Q ..... Coolant Flow Rate
Ri ..... Insultion Resistance
Rmop ..... Resistance, Operation (Main Coil)
t ..... Time Duration
T (in) ..... Coolant Inlet Temparature

Note 2: The VGA-8000 Gyrotron also requires a VYW-8001 collector electromagnet and adaption kit.

Note 3: Typical operating current for each Main Coil (Isol 1, Isol 2, Isol 3, Isol 4) is around 480 amperes. Operation at higher current may require improved cooling - higher Q, lower T(in) - to keep Rmop well within absolute ratings.

Note 4: Do not operate if Rmop rises to absolute maximum. This indicates that cooling is inadequate; Q is too low, T(in) is too high.

Note 5: Coolant requirements are for typical operation (Isol = 480 A) at sea level, in an ambient air temperature of 50°C (max).

Note 6: The magnet must be cooled with filtered deionized wate in a properly designed and operated cooling system.

Note 7: These tests shall be applied to each unit. A failure of any of these tests shall be cause for rejection of that unit. See VYW-8000 Acceptance Test Procedure for test methods to be used (Varian Instruction No. 5.316).

Note 8: There shall be no visible leakage of fluid from any coolant line, manifold, or fitting.

Note 9: Water lines shall be drained and thoroughly dried out before measuring R1.

Note 10: Do not operate if ΔP builds up to absolute maximum at $Q = 17$ gpm. Coolant passage is probably obstructed and corrective action must be taken.

Note 11: The actual operating current for each coil when operated with an appropriate Gyrotron, will be roughly 3.2 times the "Test Condition 1" valued. The precise values of individual coil currents that are required will be found on the Test Performance Sheet (TPS) for the specific Gyrotron in question. The actual operating values of coil voltages and magnetic fields will be higher than recorded on the electromagnet's TPS by approximately the ratio of the actual operating current to the "Test Condition 1" values.

Note 12: A forced flow of dielectric oil from the tank surrounding the high voltage end of the Gyrotron must be used to cool internal parts of its electron gun.

Note 13: See VYW-8000 Operating Instructions bulletin for information on the following subjects: Unpacking Instructions, Protective Measures, Installation, Connections, Operation, Transportation and Storage.

GYROTRON ELECTROMAGET SOCKET ASSEMBLY

VYW-8000

OPERATING INSTRUCTIONS

INTRODUCTION

These Operating Instructions provide basic information for installing and operating the VYW-8000 electromagnet/socket assembly which is designed for use with gyrotrons of several different types. Additional information is given in the Test Performance Sheet for your individually serial-numbered electromagnet and gyrotron. Requests for copies of this publiction or additional information should be addressed to:

Manager, Marketing
Varian Associates, Inc.
Palo Alto Microwave Tube Division
611 Hansen Way
Palo Alto, California 94303
(415) 493-4000
TWX: 910-373-1731

For more detailed operating procedures in specific equipments, consult the applicable equipment manuals and equipment performance standards. In case of conflict, equipment manuals and performance standards shall govern, except for the absolute maximum ratings on the magnet. Additional inormation may be obtained from the equipment manufacturer. Some operational details specified by the equipment manufacturer may vary from those given herein.

UNPACKING INSTRUCTIONS:

The electromagnet is shipped in an approved package which will protect it from handling abuse. If the outer container shows evidence of being dropped or is punctured, open the package and inspect the electromagnet for damage.

WARNING

THE VYW-8000 ELECTROMAGNET CANNOT BE HANDLED MANUALLY BY USING THE LIFTING EYE BOLTS PROVIDED. PERSONAL INJURY AND OR DAMAGE TO THE ELECTROMAGNET MAY OCCUR IF A SUITABLE HOIST IS NOT CAREFULLY USED.

The packing case shall be disassembled and unloaded as follows:

1. Remove ALL "klimps" and top, ends, and sides of packing case.

2. Remove 5-1/4" bolts holding magnet base to elevated plywood platform.

3. Loosen 4-3/8" nuts located next to magnet base on elevated plywood platform.

4. Attach crane to lifting eyebolts on magnet.

5. Lift magnet slowly - checking underneath the elevated plywood platform so that the socket and auxiliary gun coils and water lines clear through the openings on the suspended board and elevated plywood platform.

   To reinstall: Reverse the above steps.

NOTE

A plastic bag packaged with the electromagnet contains items such as O-rings, connector parts, etc., that are either required during installation or as replacements.

PROTECTIVE MEASURES

The VYW-8000 must be used in equipment which provides automatic protection as described below. In addition, installation and operating precautions must be observed and ratings shown within the Test Performance Sheet must not be exceeded. Failure to comply fully with the foregoing may result in electromagnet failure, damage or decreased operating

life. Any damage or failure resulting from failure to comply with those requirements or which, in Varian's opinion, could have been avoided by compliance with these requirements will void the Varian warranty.

CAUTION

DO NOT OPERATE ELECTROMAGNET WITHOUT PROPER WATER COOLING. ALL ELECTRICAL POWER SUPPLIED TO THE VYW-8000 MUST BE INTERLOCKED TO PREVENT OPERATION WITHOUT COOLANT FLOW.

CAUTION

INVERSE-VOLTAGE CONDUCTING POWER-DIODES MUST BE CONNECTED ACROSS EACH OF THE FOUR MAIN COIL SETS IN ORDER TO PREVENT COIL DESTRUCTION BY LARGE VOLTAGE TRANSIENTS CAUSED WHEN CURRENT FLOW IS SUDDENLY STOPPED.

Cooling - Unless otherwise stated on the Magnet Test Performance Sheet, the normal flow rate shall be 17 gallons per minute. The magnet must be cooled with filtered de-ionized water in a properly designed and operated cooling system. Scaling and corrosion must be minimized to realize optimum performance and life. Metals used in the cooling system should be close to copper in thegalvanic series. Zinc bearing alloys should be used as little as possible. The use of thin Teflon tape to seal pipethreads is discouraged since, if improperly applied, pieces can break loose and clog the small coolant channels in the electromagnet.

If the coolant is to be subjected to sub-freezing environments, steps must be taken to prevent its freezing in the magnet. The use of coolant heaters if recommended under such conditions. Contaminants such as soaps, foaming detergents and water soluble oils as well as particulate matters must be kept to a minimum. Exposure of the coolant to air should be minimized. A coolant purification loop may be a desirable adjunct. Freedom from contamination in the cooling system is an important consideration in obtaining maximum life. Only pure fluids should be used. The system should be drained, cleaned and refilled with fresh fluids at least annually. All possible sources of oils or greases should be eliminated.

The magnet inlet coolant temperatures must exceed 37°C. Interlocks must remove the magnet voltages if the inlet coolant temperature exceeds this limit and/or the flow is inadequate.

The maximum static pressure must not exceed 120 psia in the electromagnet.

INSTALLATION

1. The design of the mounting structure for the VYW-8000 must provide sufficient strength to support the electromagnet (approximately 1000 pounds) plus the weight of the particular gyrotron that is to be installed, plus any other supported accessories.

2. Mount the VYW-8000 electromagnet, with the major axis vertical, using the mounting holes on the bottom of the magnet structure. The O-ring provided should be installed in the magnet base plate to insure a liquid tight joint. A viscous lubricant, thinly applied to the O-ring will hold it in position while the electromagnet is being installed on its mounting structure.

CONNECTIONS

Magnet Coolant Connections - The mating connections required by the VYW-8000 for both the inlet and outlet are 1/4 inch diameter male threaded-pipe (per American National Standard on Taper Pipe Threads).

Magnet Electrical Connections -

CAUTION

PROPER POLARITIES, SHOWN ON OUTLINE DRAWING 54535, MUST BE APPLIED TO ALL COILS, OTHERWISE GYROTRN DAMAGE, OR GROSSLY IMPROPER OPERATION, WILL RESULT.

Main Coils - Have bus-bar terminals each of which has provisions for joining a maximum of three separate lug terminals for parallel-connected flexible or semi-flexible wire cables

(or a solid bus-bar) to handle the approximately 500 amperes of direct current required by each of the four coils.

Gun Coils - (2) are each powered through Amphenol type MS-3102E-12S-3P Receptacles. Mating MS-3106E-125-3S plugs are supplied with each VYW-8000.

WARNING

MAGNETIC STRUCTURE MUST BE CONNECTED TO THE SYSTEM AND EARTH "GROUND POTENTIAL" IN ORDER TO INSURE PERSONNEL SAFETY AND PROPER OPERATION.

Gyrotron Socket Coolant Connections - A length of 1/2 inch inside diameter plastic tubing is to be connected to the fitting at the bottom center of the socket. A forced-flow of at least 0.3 gallons per minute of dielectric oil from the tank surrounding the high voltage end of the gyrotron must be used to cool internal parts of the electron gun. A small, submersible pump, such as a Model 2E-N manufactured by Little Giant Corporation, or equivalent, may be used.

Gyrotron Socket Electrical Connections - The socket is provided with screw-type terminals for wire/lug connections for the gyrotrons heater, heater-cathode and gun anode electrodes.

WARNING

MAGNET CAN BE ENERGIZED WITH OR WITHOUT TUBE IN PLACE, BUT **NOT** DURING INSTALLATION OF THE TUBE. MAGNETIC MATERIAL MAY BE STRONGLY ATTRACTED TO THE TOP OF THE MAGNET IF THE TUBE IS NOT INSTALLED CAUSING A PERSONNEL HAZARD.

Magnet coil currents required for proper operation of your specific gyrotron model and serial number are to be found on the "Test Performance Sheet" supplied with the gyrotron.

TRANSPORTATION AND STORAGE

Use the original packaing case for both transporting and storing the magnet. Before placing in the packing case, drain water from magnet and blow out the remaining coolant with warm dry air. Air presure should be kept as low as possible in this process, preferably less than 50 psi.

APPENDIX C

60 GHZ GYROTRON PRELIMINARY SPECIFICATION

PRELIMINARY

60 GHZ GYROTRON OSCILLATOR (CW)

SPECIFICATION

(VARIAN)*

Varian Part #	Description
VGE-8006	• 60 GHz Gyrotron Oscillator
VYW-8060	• Focusing Magnet (60 GHz Gyrotron)
VLE-8006-AI	60 GHz Water Load
VFE-8006A-1	60 GHz Microwave Mode Filter

---

*

NOTE: The contents of this section are from current Varian Associates Product specifications.

TENTATIVE SPECIFICATION

TYPE VGE-8006

GYROTRON OSCILLATOR

The VGE-8006 is a cyclotron resonance interaction oscillator. The tube produces 200 kilowatts of CW power output at 28 GHz. It is liquid cooled and solenoid focused.

I. ELECTRICAL OPERATING PARAMETERS

Electrical Operating Parameters	Minimum	Maximum	Typical
Beam Voltage	70	90	80 kV
Beam Current	6	10	8 A
Collector Dissipation	—	700	640 kW
Gun Control Anode (with respect to cathode)	15	30	20 kV
Heater Voltage (AC)	6	13	12 V
Heater Current	1	8	2 A
Heater Power	20	96	25 W
Body Current	—	80	20 mA
Gun Anode Current	—	10 mA	1.0 mA
Power Output	200	—	210 kW
Efficiency	30%	50%	40%

II. POWER OUTPUT SENSITIVITIES

Gun Control Anode Voltage	0.6 dB/%
Main Magnet Current	1.5 dB/%
Gun Magnet Current	0.3 dB/%
Heater Voltage	0.6 dB/%
Beam Voltage	0.6 dB/%

III. BEAM CURRENT CONTROL

The operating beam current is controlled by varying the heater power. Either regulation of heater voltage or servo control with beam current sensing is recommended. The heater time constant for beam current control is 30-60 sec.

IV. MAGNETIC FIELD REQUIREMENTS

The main magnet assembly VYW-8060 is a superconducting solenoid which produces 24,000 g. It has two main windings which provide the cyclotron resonance field for the gyrotron and other windings for gun control and beam steering. The power supplies needed are furnished as a part of the magnet system. Power input requirements are 115 Vac, 40 A. The superconducting coils require liquid helium to be supplied at a rate of about 1 1/hr and liquid nitrogen at a rate of .5 1/hr. Additional coils (not yet specified) may be needed in the collector region of the tube.

V. COOLING REQUIREMENTS

Deionized water cooling is required as follows:

	FLOW RATE gpm	PRESSURE DROP psi
Tube Collector	200-300	120-160
Tube Body	15-20	75-100
Collector Seal	2-3	18-24
Output Water Load	40-80	2-5

The cathode end of the tube is designed to be operated in oil for both voltage holdoff and cooling. An oil flow of 0.3 gpm or more at 5 psi is required to cool the gun. A small submersible oil pump is recommended to supply this flow.

The output window requires FC-75 cooling of 4 to 8 gpm with a differential pressure of 20 to 40 psi. Absolute pressure at the window should never exceed 40 psig.

VI. LOAD MISMATCH

If non-mode converting mismatches are present in the 2.5 inch output waveguide, a reduction in power output can be expected. VSWRs, as defined by power reflection, of 1.5:1 and 2:1 result in typical power reductions of 10% and 30% respectively. Some adjustment in operating parameters may be required to optimize the output in the presence of mismatches. Mismatches which result in mode conversion may result in significantly different performance and may result in waveguide arcing.

VII. MECHANICAL PARAMETERS

Size and Weight:

Magnet -The magnet and socket assembly VYW-8060 is 28.5 inches in diameter. It extends 15 inches below the mounting plate and 18.5 inches above. There is a projection on one side for adding liquid helium and nitrogen which extends upward an additional 16 inches and radially outward an additional 17 inches. The magnet weight is 600 lbs.

Tube - Not yet specified -- approximately 108 inches long and 16 inches in diameter. Weight is approximately 500 pounds.

Operating Position:

The tube is designed to operate with its axis vertical with the gun down. The output waveguide comes out vertically at the top of the tube.

Output Waveguide:

The output power is multimode with most of the power in TE_{01}, and TE_{02}. The output guide is 2.5 inch I.D. pipe. Power distribution of the output power must be in 2.5 inch I.D. or larger waveguide unless special precautions are taken.

VYW-8060 MAGNET SPECIFICATION

MAGNETIC FIELD REQUIREMENTS

The main magnet assembly VYW-8060 is a superconducting solenoid which produces 24,000 g. It has two main windings which provide the cyclotron resonance field for the gyrotron and other windings for gun control and beam steering. The power supplies needed are furnished as part of the magnet system. Power input requirements are 115 Vac, 40 A. The superconducting coils require liquid helium to be supplied at a rate of about 1 1/hr and liquid nitrogen at a rate of .5 1/hr. Additional coils (not yet specified) may be needed in the collector region of the tube.

MECHANICAL PARAMETERS

Size and Weight:

Magnet - The magnet and socket assembly VYW-8060 is 28.5 inches in diameter. It extends 15 inches below the mounting plate and 18.5 inches above. There is a projection on one side for adding liquid helium and nitrogen which extends upward an additional 16 inches and radially outward an additional 17 inches. The magnet weight is 600 lbs.

varian

VYW-8060 SUPERCONDUCTING MAGNET CRYOGEN USAGE

	DEWAR CAPACITY	AVERAGE BOIL OFF	DAILY TRANSFER LOSS	AVERAGE USAGE
LIQUID HELIUM	57ℓ	0.9 ℓ/hr	7 ℓ/transfer	1.1 ℓ/hr
LIQUID NITROGEN	21ℓ	0.4 ℓ/hr	2 ℓ/transfer	0.5 ℓ/hr

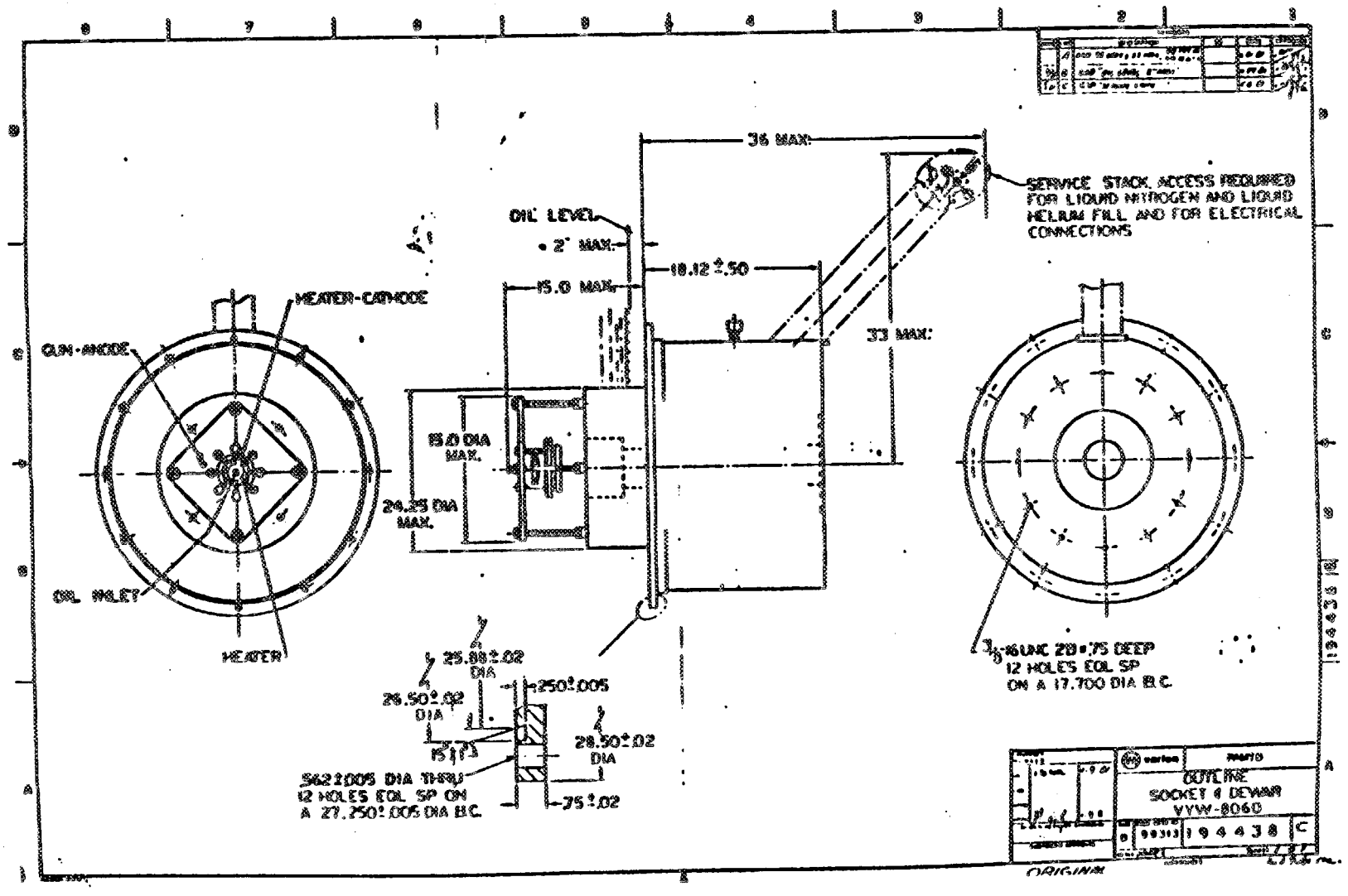
36 MAX.
SERVICE STACK. ACCESS REQUIRED FOR LIQUID NITROGEN AND LIQUID HELIUM FILL AND FOR ELECTRICAL CONNECTIONS
OIL LEVEL
2" MAX.
18.12 ±.50
15.0 MAX.
33 MAX.
HEATER-CATHODE
GUN-ANODE
15.0 DIA MAX.
24.25 DIA MAX.
OIL INLET
HEATER
25.88±.02 DIA
26.50±.02 DIA
.250±.005
28.50±.02 DIA
.562±.005 DIA THRU 12 HOLES EQL SP ON A 27.250±.005 DIA B.C.
.75±.02
3/8-16UNC 2B×.75 DEEP 12 HOLES EQL SP ON A 17.700 DIA B.C.
OUTLINE
SOCKET & DEWAR
VYW-8060
194438
C
ORIGINAL

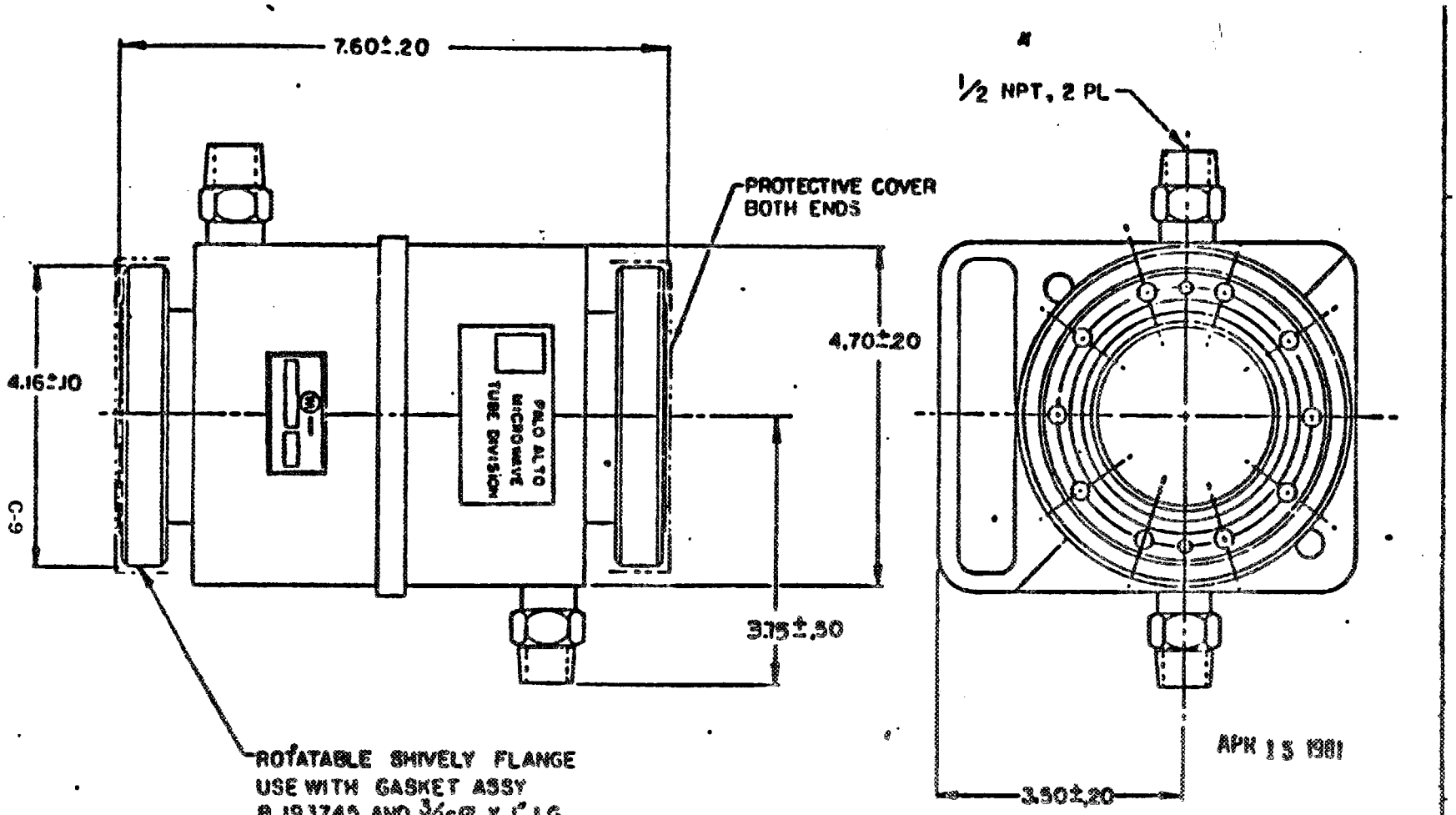

a. VSWR --- 1.2:1 max for circular TE modes
--- 1.5:1 max for non-circular modes
b. Insertion Loss --- 0.5% max for circular modes
--- 3 dB for non-circular modes
c. Power Handling --- 15 kW dissipation

varian | PAMTO
VFE-8006 A-1
MODE FILTER OUTLINE
9939 | 194262 | A

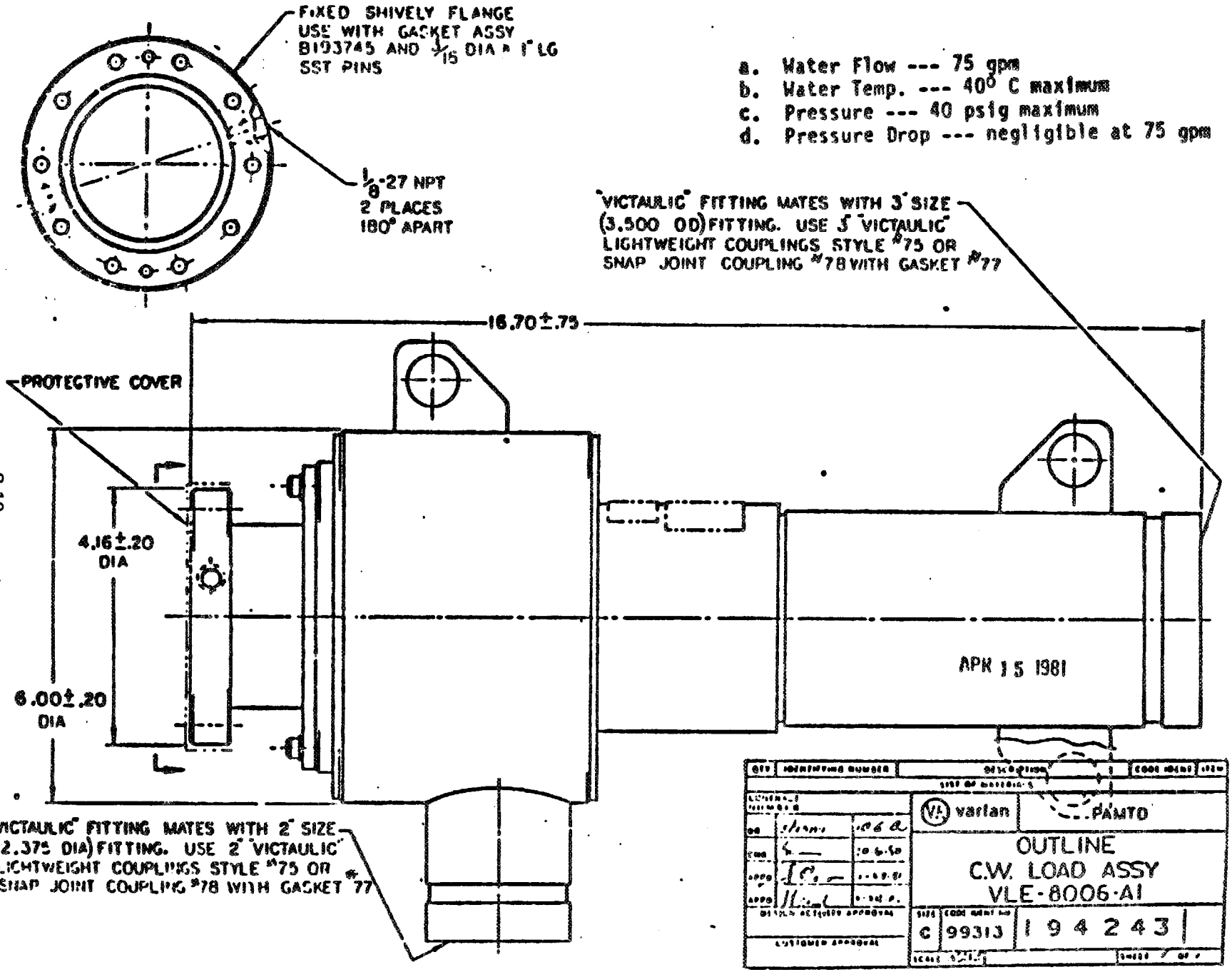
FIXED SHIVELY FLANGE
USE WITH GASKET ASSY
B193745 AND 3/16 DIA x 1" LG
SST PINS
1/8-27 NPT
2 PLACES
180° APART
a. Water Flow --- 75 gpm
b. Water Temp. --- 40° C maximum
c. Pressure --- 40 psig maximum
d. Pressure Drop --- negligible at 75 gpm
"VICTAULIC" FITTING MATES WITH 3" SIZE
(3.500 OD) FITTING. USE 3" "VICTAULIC"
LIGHTWEIGHT COUPLINGS STYLE #75 OR
SNAP JOINT COUPLING #78 WITH GASKET #77
16.70±.75
PROTECTIVE COVER
4.16±.20
DIA
6.00±.20
DIA
APR 15 1981
"VICTAULIC" FITTING MATES WITH 2" SIZE
(2.375 DIA) FITTING. USE 2" "VICTAULIC"
LIGHTWEIGHT COUPLINGS STYLE #75 OR
SNAP JOINT COUPLING #78 WITH GASKET #77
varian
PAMTO
OUTLINE
C.W. LOAD ASSY
VLE-8006-A1
C
99313
194243

APPENDIX D

PRELIMINARY ECRH HEATING AND COOLING REQUIREMENTS

Initial preliminary calculations of the ECRH heating and cooling requirements have been estimated per Table HC.1.1 and given to MDAC Facility Engineering for sizing the coolant systems. Engineering judgement has been used in estimating the efficiency of the indoor and outdoor components for estimating heating and cooling requirements. Not included in the Table HC.1.1 is preliminary estimates of the "Upgrade" power and cooling requirements for the anticipated 90 GHz gyrotron systems. Preliminary estimates of the requirements were scaled from existing 28 GHz information.

TABLE HC.1.1 ECRH HEATING AND COOLING

COMPONENT	QUANTITY	TOTAL INPUT POWER WATTS	TOTAL COOLING REQUIRED BTU/HR	
28 GHz MAGNET COILS	8 2 4 4	600A x 30V = 144000 .75A x 40V = 60 2 A x 100V = 800 15A x 35V = 2100 TOTAL = 147000	% EFF.	501,000
28 GHz GYROTRON	2	525000 x 2 = 1050000	40	E 2,150,000
28 GHz MAGNET P.S.	8 10	1/.8 x 144000 = 180000 1/.5 x 3000 = 6000		123,000 10,000
60 GHz MAGNET COILS	6	NEGLIGIBLE		NONE
60 GHz GYROTRON	6	1050000 x 3 = 3150000	40	E 6,450,000
60 GHz MAGNET PS	6	APPROXIMATELY 27 kW		NONE
28 GHz DISTRIBUTION 60 GHz DISTRIBUTION	2 6	400000 1200000	70 70	E 275,000 E 825,000
28 GHz ECRH P.S. BEAM	2	2 x 1.73 x 48 x 13.8 kV = 2300000	78	1,720,000
60 GHz ECRH P.S. BEAM	6	6 x 1.73 x 48 x 13.8 kV = 6900000	78	5,160,000
GUN TRANSFORMER AND P.S.	1	1000 kVA	80	200,000

APPENDIX E

PRELIMINARY

ECRH POWER SUPPLY MANUFACTURING/ACCEPTANCE TEST PLAN

Gyrotron Power Supplies - Two gyrotron power supply designs will be used on the EBT-P project. One is for the 28-GHz gyrotron tubes, the other for the 60-GHz gyrotron tubes. The 28-GHz power supplies will be supplied as used Government Furnished Equipment from EBT-S. The 60-GHz power supplies will be procured by MDAC for EBT-P. The Government will modify the 28-GHz power supplies for outdoor installation, acceptance test them, and deliver them to the MDAC Oak Ridge Valley Industrial Park Facility (ORVIPF). The acceptance testing and operational characteristics of the modified 28-GHz power supplies for EBT-P remain the responsibility of the Government.

MDAC will test and inspect the 28-GHz power supplies on arrival at the EBT-P site. The high voltage equipment will be tested for dielectric strength and resistance. Controls, interlocks, crowbars, and interrupt functions will be functionally tested before the supplies are connected to the gyrotron tubes.

For the 60-GHz power supplies, the subcontractor will perform manufacturing tests prior to delivery, and acceptance tests after reassembly at Oak Ridge Valley Industrial Park Facility. The manufacturing/acceptance tests are depicted in Figure 8.8.1. These tests are virtually identical to the tests defined by ORNL Specification FE-SP No. 339, CW Gyrotron Power Supply.

FIGURE 8.8.1 GYROTRON POWER SUPPLY MANUFACTURING AND ACCEPTANCE TEST PLAN

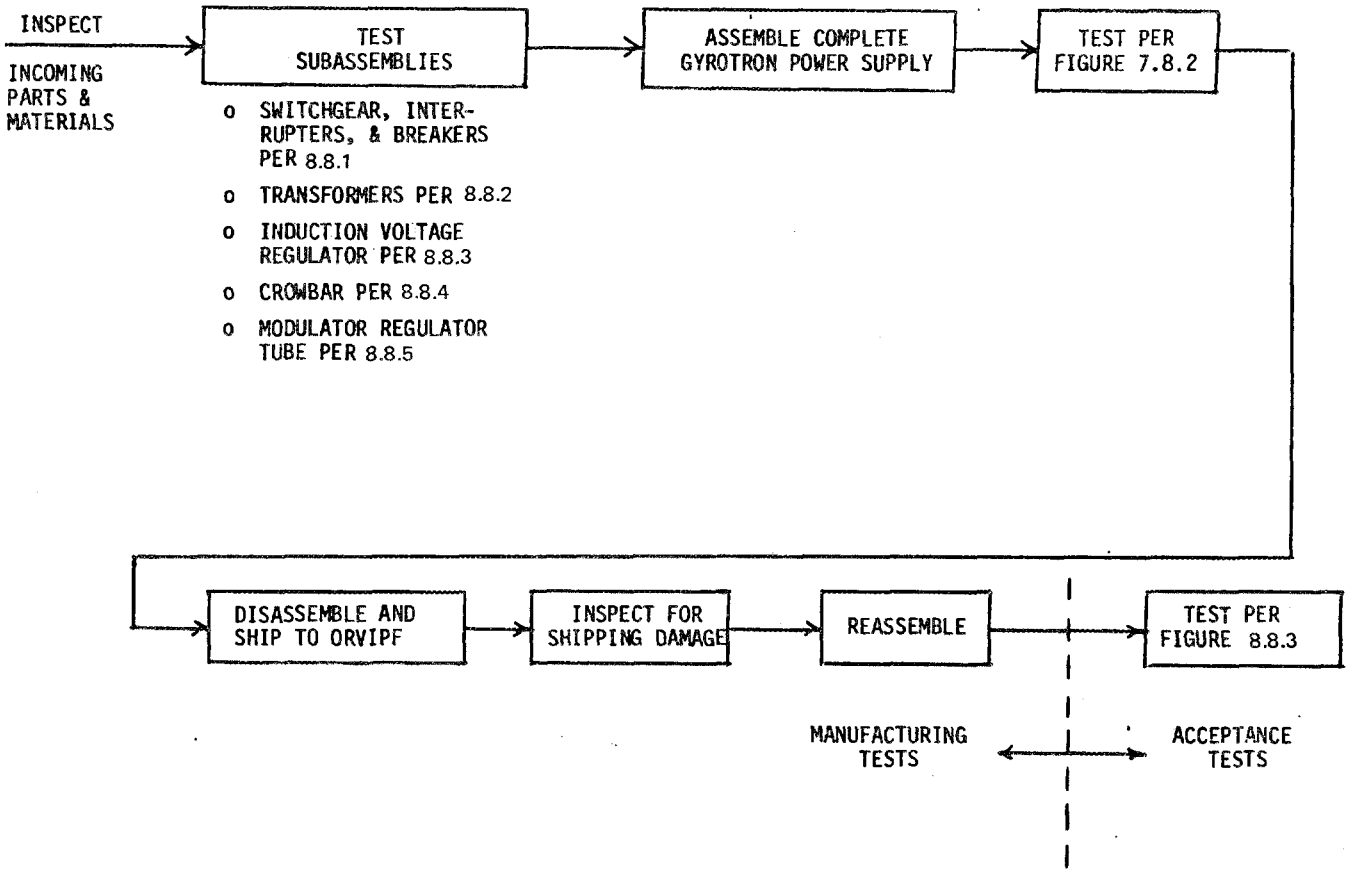

Outgassing

Slowly Increase Heater Voltage (In .1-.2 Volt Increments)

- Note Heater Time Constant $\approx$ 30 Seconds
- No R.F. Output
- Monitor Vacuum
- Monitor Beam Current For Steady Increase
- Monitor Gun Current, 0 Amps

Bring Beam Current To Full Operating Value

- NOTE: If Crowbar Occurs Start Sequence All Over Again At Beam and Gun Voltage Minimums

Completely Outgas Until Delta Vacuum $\leqslant 10^9$ Torr in a 30-Minute Period

R. F. Power Output Start-Up

Ready to Start Oscillation in Proper Mode

- Check With Frequency Measurement

Operate At Threshold Level

- Heater Voltage At Level Required To Make Beam Current $\approx$ 2-2 1/2 Amps With 20 KV Gun Voltage

Increase Gun Voltage Until Tube Oscillates

- Observe On Scope
- Measure Frequency to Determine Mode of Operation
- Invariably Not Right Mode the First Time
- Lot of Outgassing with Crowbars and High Dissipation at Tube Elements

To Get Into Right Mode

DON'T INCREASE POWER!

Decrease Gun Anode Voltage Below Oscillation Level

Change Operating Parameter(s); for Example, Main Magnet Coil Currents

Make Changes Systematically

Monitor

- Vacuum, Beam Current, Body Current, Etc.

When In Correct Mode, Frequency In Correct Range and Dissipation Normal

Normal Operation

Tube in Right Mode

Body Current Minimized

Determine Latitude in Main Magnet Currents for Stable Operation

Document Nominal Values of Monitors

Increase Gun Voltage to Full Operating Level

- But Don't Exceed 1 MA. Gun Current

Monitor and Document

- Beam, Body, Gun Currents
- R.F. Output
- Dissipation in Each Element

Calibrate

Calibrate System Against Dummy Loat At Various Levels For Reference

Exercise Several Times

Burn-In Tube to Establish Repeatability and Reliability

R.F. Power To Plasma

Now Start All Over Again

- Due to Difference In Loading
- Characteristics Have Correspondence IF Operation with Dummy Load Was Well Established

Recalibrate Once Normal Operation is Established

Summary

Each Tube Has Its Own "Personality"

Initial Start-Up is Slow and Time Consuming

Calibration of Parameters at Various Power Levels Provides the Critical Path for Operation at Various Levels

Presently Critical path is Unique for Each Tube

GYROTRON

TURN-ON PROCEDURE

Preliminary Checks

- Less than 10^{-8}

Physical Inspection

Check Heater Continuity

Check Resistances

- Gun to Cathode
- Gun to Body
- Collector to Body

Check Dielectric Properties of Oil in Tank

Install In Socket

Preliminary Checks

System Power On

Turn On

- Cooling (Water, FC-75, Cryogenics)
- Flow Monitoring
- I&C Test Equipment
- Recorders
- Arc Detectors
- Collector, Gun and Main Magnet Supplies

Check Area For Leaks, Etc.

- Short circuit transformer output per ANSI C57.12.90a except an impedance, equal to the input system impedance, shall be placed in series with the primary winding of the transformer under test. After the test, repeat tests flagged with an △R
- In the rectifier transformer, verify that the diode assembly can withstand 2.5 times the peak application voltage.

8.8.3 Induction Voltage Regulator (IVR) - Inspect and test the unit per standard commercial practices consisting, as a minimum, of the following:

Inspections

- Same as Inspections listed in paragraph 8.8.1.

Test*

- Double induced test
- Measure resistance of windings
- Test polarity and phase relation
- Test oil dielectric
- Determine no load parameters (V, A, W) at 100 and 110 percent rated voltage.
- Measure impedance and load loss.
- Test for dielectric breakdown at high potential.
- At MDAC's request, and additional expense, short circuit test the induction voltage regulator.
- Short circuit test the IVR per ANSI C57.12.900 except an impedance, equal to the input system impedance, shall be placed in series with the primary winding of the TRV.

After the short circuit test, the following tests shall be provided:

a) High potential tests
b) Double induced

*Note, these tests do not include a thermal design qualification test which will be performed on the first unit.

c) LV Impulse
d) Excitation tests
e) Impedance measurement

- Cycle the voltage from minimum to maximum 50 times with no load.

8.8.4 Crowbar - Each crowbar subassembly will be subjected to the following inspections and tests:

Inspections

Same as inspections listed in paragraph 8.8.1.

Tests

TBD

8.8.5 Modulator Regulator Tube - The modulator regulator tube will be inspected and tested per standard commercial practices including the following. *

Inspection

Same as inspections listed in paragraph 8.8.1.

Testing

TBD

APPENDIX F

GYROTRON

SET-UP AND CONDITIONING

Hi-Potting

Hi-Pot With a "Soft" Supply

- Limited Amount of Energy
- 10% Greater Than Operating Voltage
- Main and Gun Magnets On
- Heater Off

Anode To Body

- Gun Tied to Cathode

Repeat Hi-Pot Until No Arcing Occurs

Maintain for 20-30 Minutes With No Arcs

Preparation

Connect All Cooling Water Lines

- Check for Leaks and Proper Flow

Connect FC-75 To Window

- Check for Leaks and Proper Flow

Connect ARC Detector Fiber Optics

Switch In (Or Connect) Dummy Load

Check All Protective Devices

- Thermal, Crowbars, Oil Level, Water, Cryogenics, etc.

Initial Start-Up, Heater

Apply Heater Power Slowly

- Monitor Voltage, Current, Vacuum

If Outgassing Occurs

- Allow Vacuum to Recover to 10^{-8} Torr Before Recycling
- Maintain Stable Final Value for at Least 5 Minutes

Go To 10% above Operating Value

- Maintain Until Vacuum Stabilizes At Original Level

Beam Power (No Heater)

Apply Beam Voltage $\approx$ 20 KV

Raise To Operating Value

- Monitor Vacuum
- Monitor Body Current, 0 Amps
- Monitor Beam Current, 0 Amps

If Arcing Occurs Allow Vacuum to Recover to Less Than 10^{-8} Torr Before Recycling

Gun Anode Power (No Heater)

Apply Gun Anode Voltage At Minimum Value $\leqslant$2 KV

Slowly Increase Voltage to 20 KV

- Monitor Vacuum
- Monitor Dissipation
- Monitor Beam Current
- Monitor Body Current
- Monitor Gun Current, 0 Amps

If Arcing Occurs, Allow Recovery Before Recycling

Maintain Stable Final Value For At Least 5 Minutes

FIGURE 8.8.2 GYROTRON POWER SUPPLY ASSEMBLY TESTS

Beam Functions

- Leakage current in ground return (body current) at full beam voltage
- Output current at full beam voltage
- Output voltage ripple
- Output voltage regulation as a function of input voltage and load. (Includes regulation at no and full load).

Gun Functions

- Over the range of voltage adjustments, and specifically at 20,000 V, test voltage regulation over the full range of output currents. For these tests, input voltages will not be varied, (i.e., select a voltage set point, vary the load, and obseve that the voltage variation does not exceed specified limits).
- Output voltage ripple
- For a given load, determine the output voltage regulation as a function of input voltage for several input voltages.
- Test DC modulation capability (test definition to be determined).

Heater Supply Functions

- Output voltage regulation as a function of input voltage

Instrumentation & Control Functions

- Verify operation

Crowbar Functions

- Test to be defined by subcontractor. Test shall demonstrate:
  - speed of response of beam crowbar
  - speed of response of gun crowbar
  - simultaneous operation of beam and gun crowbars
  - independent operation of gun crowbar
  - crowbar operates at minimum required levels (test conducted 25 times)
  - instrumentation and control functions

FIGURE 8.8.3 GYROTRON POWER SUPPLY ACCEPTANCE TESTS AT ORVIPF

- Inspect for shipping damage
- Inspect for proper reassembly
- Repeat tests specified in Figure 8.8.2
- Operate within specification for four hours without repair or adjustment

8.8.1 Switchgear, Interrupters, and Breakers - During manufacturing, the switchgear interrupters, and breakers shall receive the following inspections and tests:

Inspections

- Materials and parts are as called out on drawings and in accordance with ASI standards.
- Wire routings and windings are properly placed and secured.
- Workmanship is in accordance with drawings and ANSI standards.
- Cabinets have proper fit and parts function properly.
- Electrical insulation/insulators are placed per drawing.
- Finishes are properly applied.

Tests

- Test for dielectric breakdown at high potential.
- Test for proper continuity and resistance.
- Test bushings and bushing current transformer for dielectric breakdown at the "shall withstand" voltage.
- Test interrupters for speed of operation and fault clearing capability.
- Test tank at design limit pressure for leakage.
- Test interlocks.

8.8.2 Transformers and Transformer/Rectifiers - The transformer subcontractor will inspect transpormers per standard commercial practices and will test them in accordance with the ANSI standard test code for transformers. As a minimum, inspections and tests shall include the following:

Inspections

- Same as Inspections listed in paragraph 8.8.1.

Tests*

- Measure resistance of windings
- Ratio test all tap positions
- Test polarity and phase relation
- Test oil dielectric
- Determine no load parameters (V, A, W) at 100 and 110 percent rated voltage. R
- Measure impedance and load loss R
- Test for dielectric breakdown at high potential
- Perform induced-voltage double-normal tests per ANSI standards for 7200 cycles
- Demonstrate insulation high voltage surge capability with ANSI Impulse Test
- At MDAC's request, and additional expense, short circuit transformer output per ANSI C57.12.90a. After the test, repeat tests flagged with the symbol R .

The following recommended tests shall be performed after the short circuit tests required (per ANSI).

a) High potential tests
b) Double inducted tests
c) LV Impulse tests

*Note, these tests do not include a thermal design qualification test which will be performed on the first unit of each different power-transformer design.

Magnet Supplies

Collector Magnet Currents

Nominal Rated

Main Magnet Currents

Value for Initial Operation

Gun Magnet Currents

Nominal Rated

Initial Outgassing

Turn On Heater Supply

Raise Slowly Observing Outgassing AT the VAC-ION Pump

- Keep Heater Current Below Maximum Rated

Outgas Till Vacuum Returns To Normal

Crowbar Checks

Test Arc Detector Crowbarring

- Reset

Test Gun, Beam, Body Crowbars

- Reset

Flow Check

Water

- Body
- Collector Seal
- Tube Miscellaneous
- Mode Filters
- Waveguide
- Manifold

FC-75

- At Windows

Turn-On

Recheck Magnet Currents

Recheck Heater Voltage and Current

Check All Recorders

Verify That Torus Gas and Field Are Ready

Apply Beam Voltage At Minimum

- Raise to Operating Value

Apply Gun Voltage at Minimum

- Raise Slowly to Initial Non-Oscillating Level

Adjust Heater Supply for Initial Level

Allow System To Stabilize For Several Minutes

Record Data

RF Power Generation

Raise Gun Voltage Until Oscillation Starts

- Check For Proper Frequency and Mode
- Do Not Increase Power If In Wrong Mode

Main Magnet Currents May Need Readjustment

Raise Heater Power To Operating Value

- Power Output Increases to Operating Value

Allow System To Stabilize for Several Minutes

Record Data

Run

GYROTRON

TURN-OFF PROCEDURE

RF Power Down

Decrease Heater Voltage to Initial Level

- Power Output Decreases

Main Magnet Currents May Need Readjustment

Decrease Gun Voltage to Non-Oscillating Level

Gyrotron Shut Down

Decrease Gun Voltage to Minimum

- Turn Gun Supply Off

Decrease Beam Supply To Minimum

- Turn Beam Supply Off

Decrease Heater Voltage To Minimum

- Turn Heater Supply Off

Decrease Main Magnet Currents To Zero

Decrease Gun Magnet Currents To Zero

System Shut Down

Turn Off In Sequence

- System Power
- Cooling (Water Etc.)
- I&C Test Equipment
- Recorders
- Arc Detectors

Final Checks

- Beam
- Gun
- Heater
- Main Magnets
- Gun Magnets
- Collector Magnets
- I&C Power

Check Area for Any Signs of Leaks or Faults

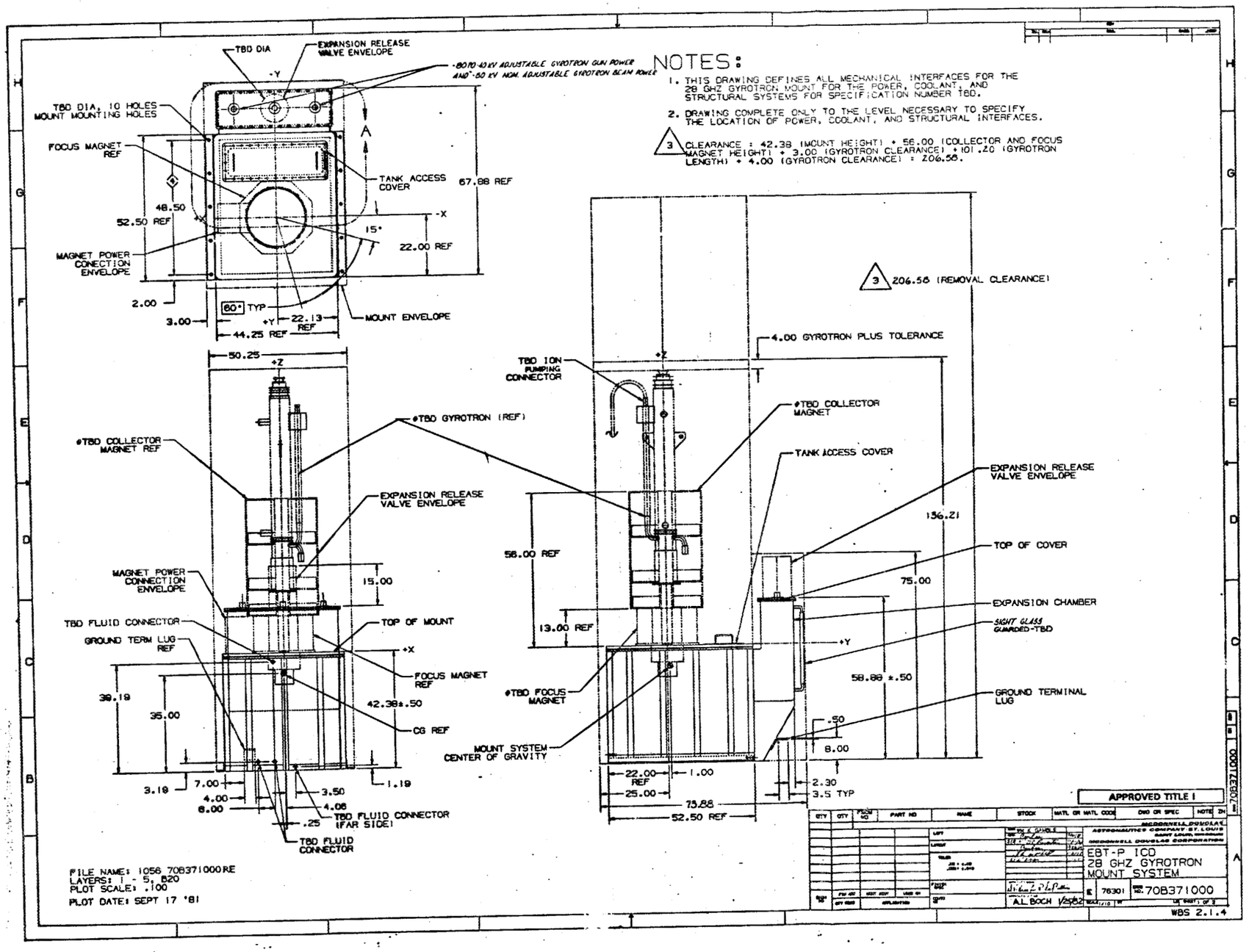
NOTES:
1. THIS DRAWING DEFINES ALL MECHANICAL INTERFACES FOR THE 28 GHZ GYROTRON MOUNT FOR THE POWER, COOLANT, AND STRUCTURAL SYSTEMS FOR SPECIFICATION NUMBER TBD.
2. DRAWING COMPLETE ONLY TO THE LEVEL NECESSARY TO SPECIFY THE LOCATION OF POWER, COOLANT, AND STRUCTURAL INTERFACES.
3 CLEARANCE : 42.38 (MOUNT HEIGHT) + 56.00 (COLLECTOR AND FOCUS MAGNET HEIGHT) + 3.00 (GYROTRON CLEARANCE) + 101.20 (GYROTRON LENGTH) + 4.00 (GYROTRON CLEARANCE) = 206.58.
TBD DIA
EXPANSION RELEASE VALVE ENVELOPE
-80 TO -40 KV ADJUSTABLE GYROTRON GUN POWER AND -60 KV NOM. ADJUSTABLE GYROTRON BEAM POWER
TBD DIA, 10 HOLES MOUNT MOUNTING HOLES
FOCUS MAGNET REF
TANK ACCESS COVER
67.88 REF
48.50
52.50 REF
15°
22.00 REF
MAGNET POWER CONECTION ENVELOPE
2.00
3.00
60° TYP
22.13 REF
44.25 REF
MOUNT ENVELOPE
50.25
TBD ION PUMPING CONNECTOR
3 206.58 (REMOVAL CLEARANCE)
4.00 GYROTRON PLUS TOLERANCE
ØTBD COLLECTOR MAGNET
ØTBD GYROTRON (REF)
ØTBD COLLECTOR MAGNET REF
TANK ACCESS COVER
EXPANSION RELEASE VALVE ENVELOPE
136.21
EXPANSION RELEASE VALVE ENVELOPE
56.00 REF
TOP OF COVER
MAGNET POWER CONNECTION ENVELOPE
15.00
75.00
EXPANSION CHAMBER
TBD FLUID CONNECTOR
TOP OF MOUNT
13.00 REF
SIGHT GLASS GUARDED-TBD
GROUND TERM LUG REF
FOCUS MAGNET REF
58.88 ±.50
ØTBD FOCUS MAGNET
GROUND TERMINAL LUG
39.19
35.00
42.38±.50
CG REF
.50
8.00
MOUNT SYSTEM CENTER OF GRAVITY
22.00 REF
1.00
25.00
73.88
52.50 REF
2.30
3.5 TYP
3.19
7.00
4.00
6.00
3.50
4.06
.25
1.19
TBD FLUID CONNECTOR (FAR SIDE)
TBD FLUID CONNECTOR
FILE NAME: 1056 708371000RE
LAYERS: 1 - 5, 820
PLOT SCALE: .100
PLOT DATE: SEPT 17 '81
APPROVED TITLE I
EBT-P ICD
28 GHZ GYROTRON
MOUNT SYSTEM
76301
708371000
WBS 2.1.4

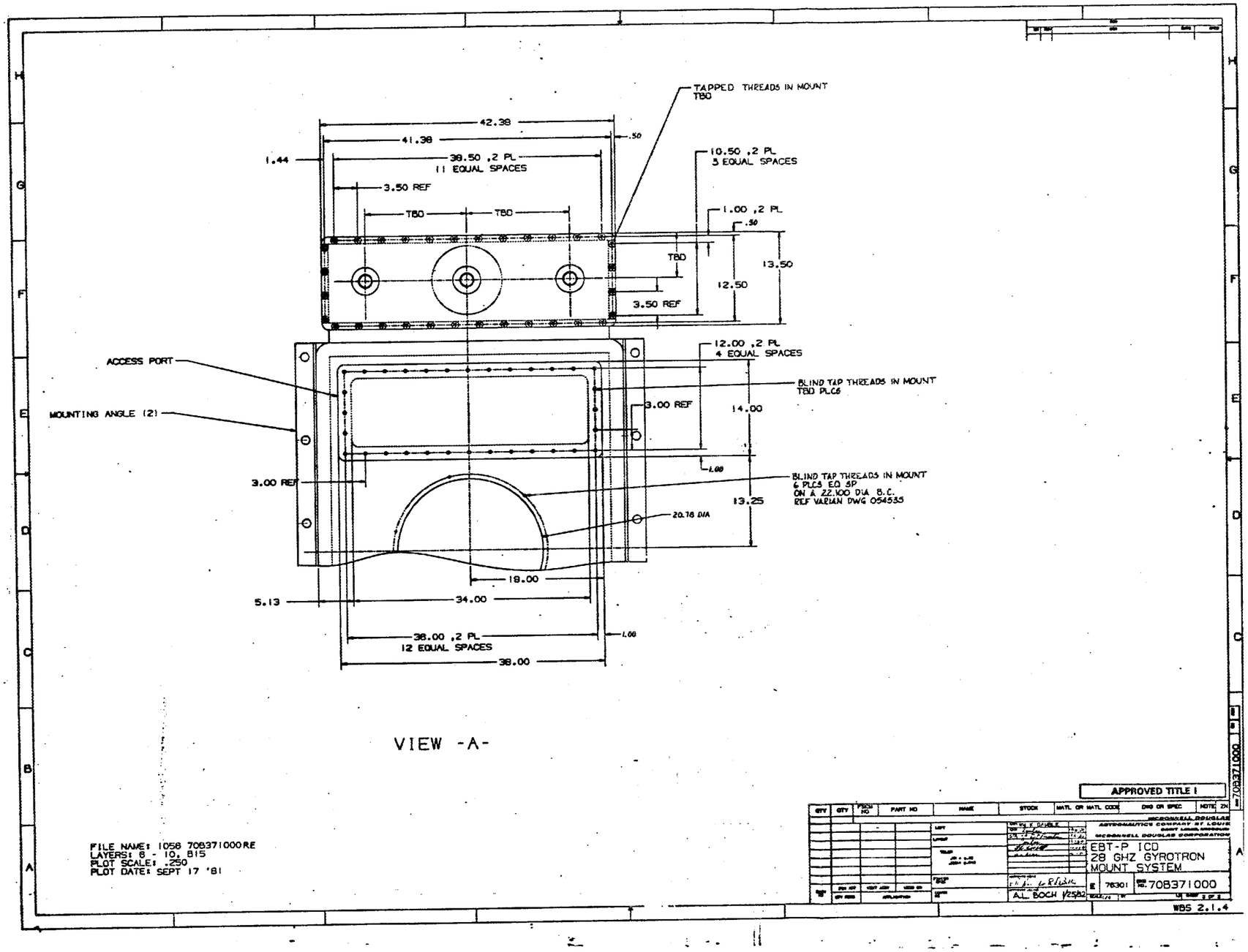
TAPPED THREADS IN MOUNT TBD
42.38
41.38
.50
1.44
38.50 ,2 PL
11 EQUAL SPACES
3.50 REF
TBD
TBD
10.50 ,2 PL
3 EQUAL SPACES
1.00 ,2 PL
.50
TBD
13.50
12.50
3.50 REF
12.00 ,2 PL
4 EQUAL SPACES
ACCESS PORT
BLIND TAP THREADS IN MOUNT TBD PLCS
MOUNTING ANGLE (2)
3.00 REF
14.00
1.00
3.00 REF
BLIND TAP THREADS IN MOUNT
6 PLCS EQ SP
ON A 22.100 DIA B.C.
REF VARIAN DWG 054535
13.25
20.78 DIA
18.00
5.13
34.00
38.00 ,2 PL
12 EQUAL SPACES
1.00
38.00
VIEW -A-
APPROVED TITLE I
EBT-P ICD
28 GHZ GYROTRON
MOUNT SYSTEM
76301
708371000
WBS 2.1.4
FILE NAME: 1058 708371000RE
LAYERS: 8 - 10, 815
PLOT SCALE: .250
PLOT DATE: SEPT 17 '81

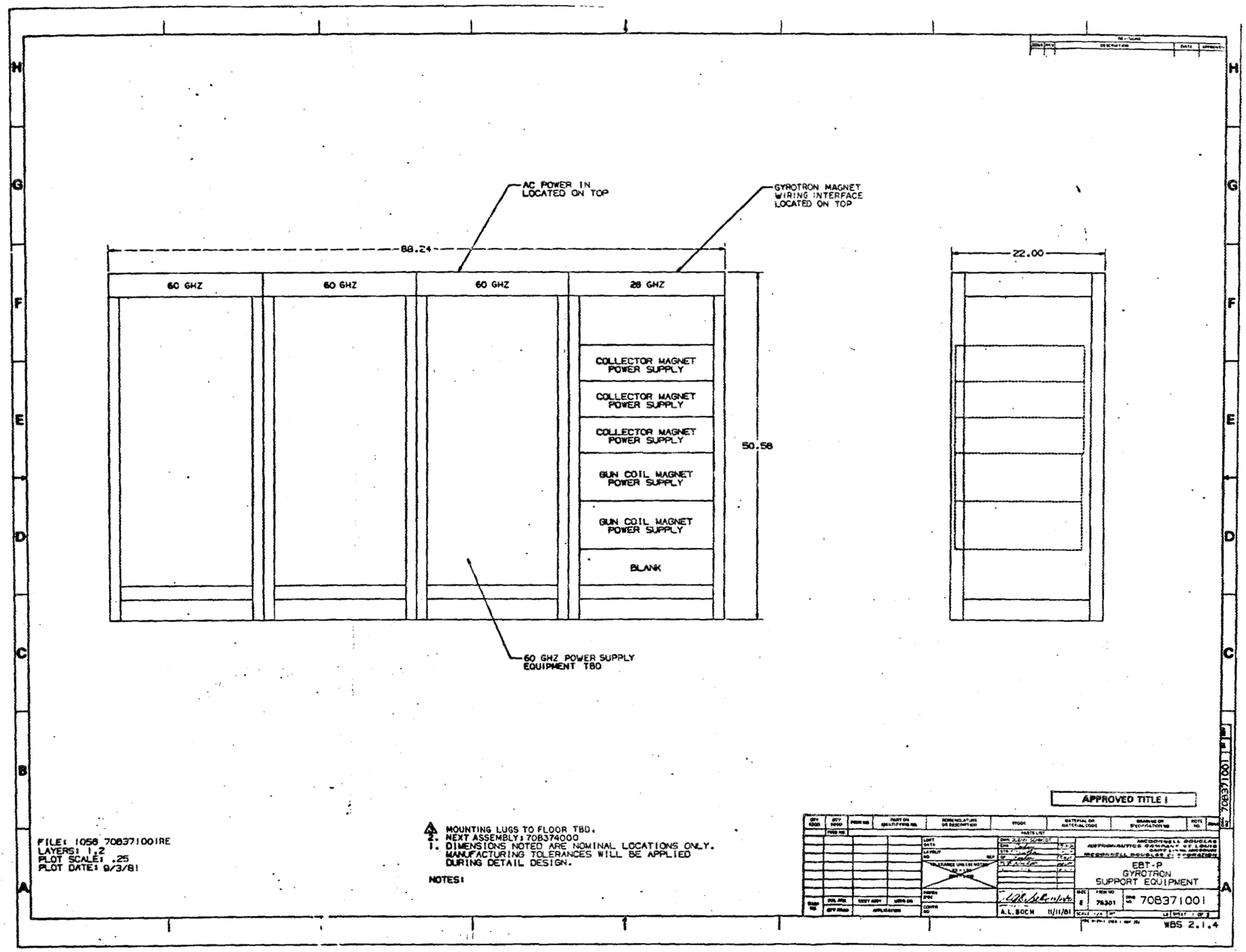
AC POWER IN LOCATED ON TOP
GYROTRON MAGNET WIRING INTERFACE LOCATED ON TOP
88.24
22.00
60 GHZ
60 GHZ
60 GHZ
28 GHZ
COLLECTOR MAGNET POWER SUPPLY
COLLECTOR MAGNET POWER SUPPLY
COLLECTOR MAGNET POWER SUPPLY
GUN COIL MAGNET POWER SUPPLY
GUN COIL MAGNET POWER SUPPLY
BLANK
50.58
60 GHZ POWER SUPPLY EQUIPMENT TBD
APPROVED TITLE :
FILE: 1058 708371001RE
LAYERS: 1,2
PLOT SCALE: .25
PLOT DATE: 9/3/81
MOUNTING LUGS TO FLOOR TBD.
2. NEXT ASSEMBLY: 708374000
1. DIMENSIONS NOTED ARE NOMINAL LOCATIONS ONLY. MANUFACTURING TOLERANCES WILL BE APPLIED DURING DETAIL DESIGN.
NOTES:
EBT-P
GYROTRON
SUPPORT EQUIPMENT
708371001
A.L. BOCH 11/11/81
WBS 2.1.4

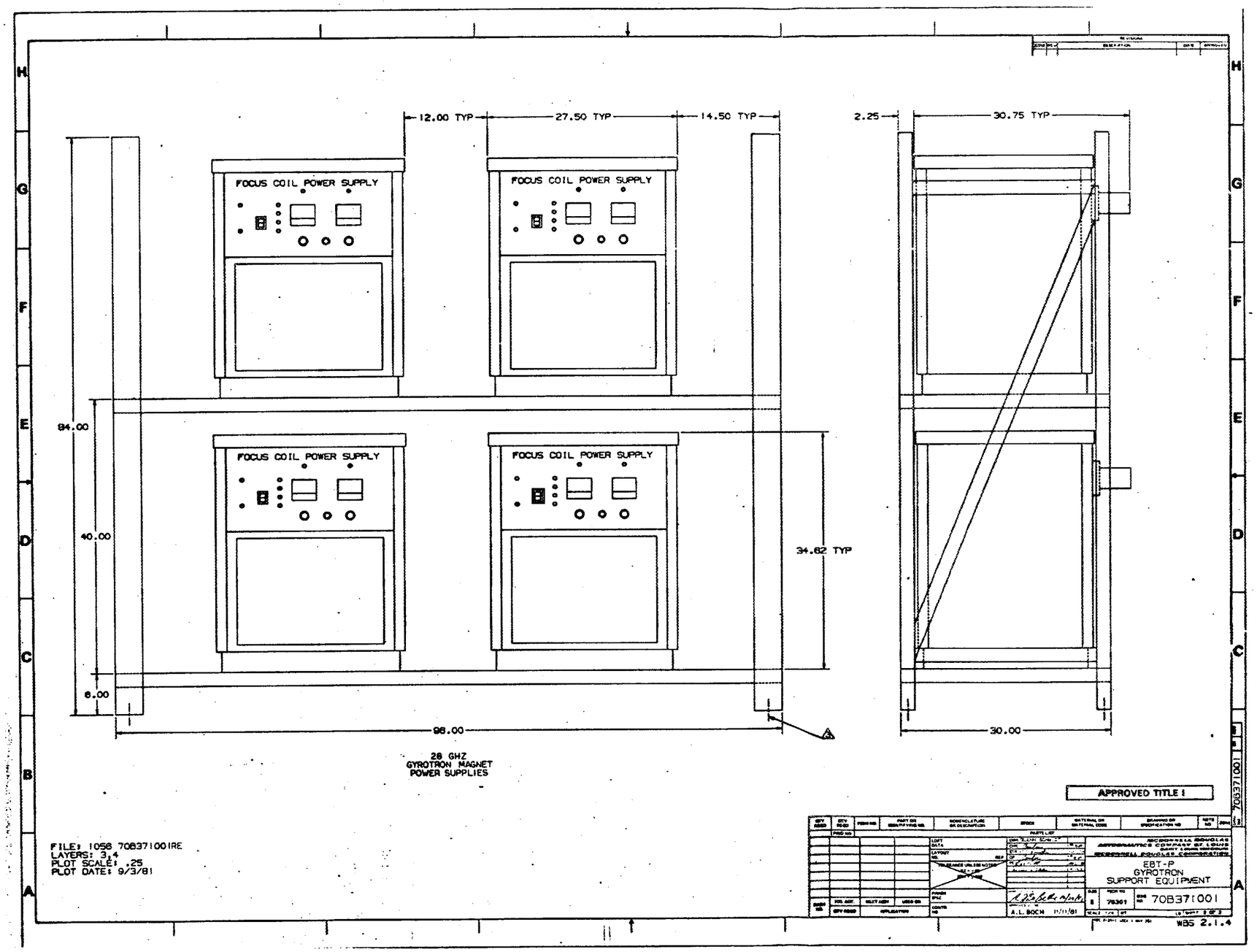
12.00 TYP
27.50 TYP
14.50 TYP
2.25
30.75 TYP
FOCUS COIL POWER SUPPLY
FOCUS COIL POWER SUPPLY
FOCUS COIL POWER SUPPLY
FOCUS COIL POWER SUPPLY
84.00
40.00
6.00
34.62 TYP
98.00
30.00
28 GHZ
GYROTRON MAGNET
POWER SUPPLIES
APPROVED TITLE I
FILE: 1058 708371001RE
LAYERS: 3,4
PLOT SCALE: .25
PLOT DATE: 9/3/81
EBT-P
GYROTRON
SUPPORT EQUIPMENT
70837I001
WBS 2.1.4

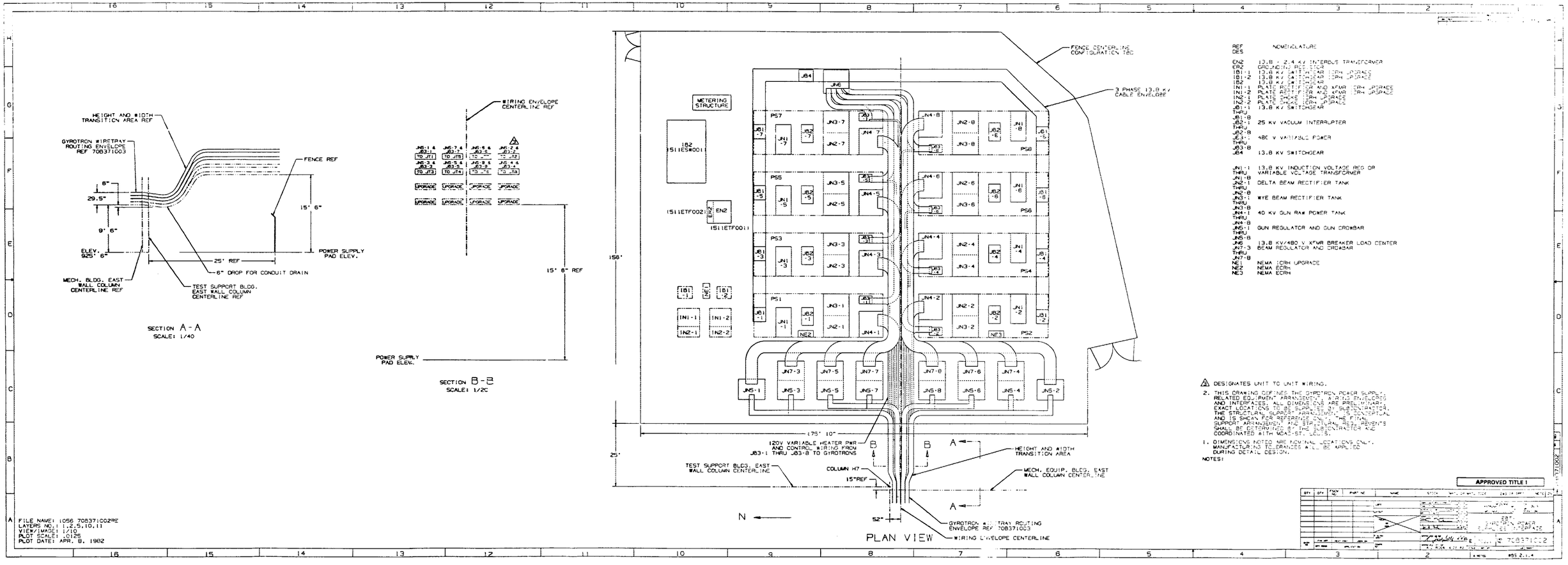
SECTION A-A
SCALE: 1/40
HEIGHT AND WIDTH TRANSITION AREA REF
GYROTRON WIRETRAY ROUTING ENVELOPE REF 708371003
FENCE REF
POWER SUPPLY PAD ELEV.
6" DROP FOR CONDUIT DRAIN
MECH. BLDG. EAST WALL COLUMN CENTERLINE REF
TEST SUPPORT BLDG. EAST WALL COLUMN CENTERLINE REF
SECTION B-B
SCALE: 1/20
WIRING ENVELOPE CENTERLINE REF
15' 8" REF
PLAN VIEW
METERING STRUCTURE
FENCE CENTERLINE CONFIGURATION TBD
3 PHASE 13.8 KV CABLE ENVELOPE
120V VARIABLE HEATER PWR AND CONTROL WIRING FROM JB3-1 THRU JB3-8 TO GYROTRONS
TEST SUPPORT BLDG. EAST WALL COLUMN CENTERLINE
COLUMN H7
MECH. EQUIP. BLDG. EAST WALL COLUMN CENTERLINE
HEIGHT AND WIDTH TRANSITION AREA
GYROTRON WIRETRAY ROUTING ENVELOPE REF 708371003
WIRING ENVELOPE CENTERLINE
N
175' 10"
158'
25'
52"
15" REF
REF DES NOMENCLATURE
EN2 13.8 - 2.4 KV INTERBUS TRANSFORMER
ER2 GROUNDING RESISTOR
IB1-1 13.8 KV SWITCHGEAR (CRH UPGRADE)
IB1-2 13.8 KV SWITCHGEAR (CRH UPGRADE)
IB2 13.8 KV SWITCHGEAR
IN1-1 PLATE RECTIFIER AND XFMR (CRH UPGRADE)
IN1-2 PLATE RECTIFIER AND XFMR (CRH UPGRADE)
IN2-1 PLATE CHOKE (CRH UPGRADE)
IN2-2 PLATE CHOKE (CRH UPGRADE)
JB1-1 THRU JB1-8 13.8 KV SWITCHGEAR
JB2-1 THRU JB2-8 25 KV VACUUM INTERRUPTER
JB3-1 THRU JB3-8 480 V VARIABLE POWER
JB4 13.8 KV SWITCHGEAR
JN1-1 THRU JN1-8 13.8 KV INDUCTION VOLTAGE REG OR VARIABLE VOLTAGE TRANSFORMER
JN2-1 THRU JN2-8 DELTA BEAM RECTIFIER TANK
JN3-1 THRU JN3-8 WYE BEAM RECTIFIER TANK
JN4-1 THRU JN4-8 40 KV GUN RAW POWER TANK
JN5-1 THRU JN5-8 GUN REGULATOR AND GUN CROWBAR
JN6 13.8 KV/480 V XFMR BREAKER LOAD CENTER
JN7-3 THRU JN7-8 BEAM REGULATOR AND CROWBAR
NE1 NEMA (CRH UPGRADE)
NE2 NEMA ECRH
NE3 NEMA ECRH
DESIGNATES UNIT TO UNIT WIRING.
2. THIS DRAWING DEFINES THE GYROTRON POWER SUPPLY, RELATED EQUIPMENT ARRANGEMENT, WIRING ENVELOPES AND INTERFACES. ALL DIMENSIONS ARE PRELIMINARY. EXACT LOCATIONS TO BE SUPPLIED BY SUBCONTRACTOR. THE STRUCTURAL SUPPORT ARRANGEMENT IS CONCEPTUAL AND IS SHOWN FOR REFERENCE ONLY. THE FINAL SUPPORT ARRANGEMENT AND STRUCTURAL REQUIREMENTS SHALL BE DETERMINED BY THE SUBCONTRACTOR AND COORDINATED WITH MDAC-ST. LOUIS.
1. DIMENSIONS NOTED ARE NOMINAL LOCATIONS ONLY. MANUFACTURING TOLERANCES WILL BE APPLIED DURING DETAIL DESIGN.
NOTES:
FILE NAME: 1056 708371002RE
LAYERS NO.: 1,2,5,10,11
VIEW/IMAGE: 1/10
PLOT SCALE: .0125
PLOT DATE: APR. 8, 1982
APPROVED TITLE I
708371002

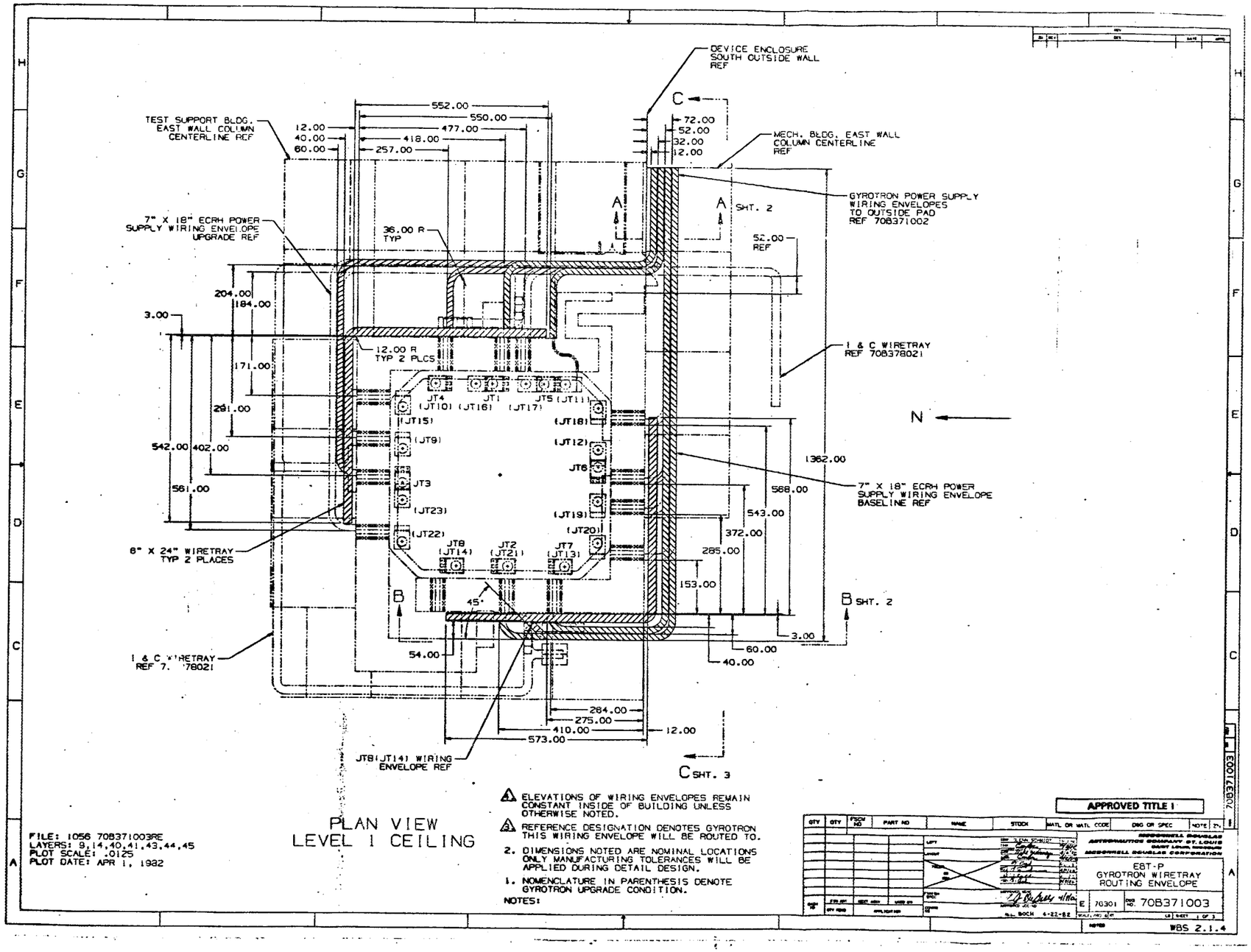
DEVICE ENCLOSURE SOUTH OUTSIDE WALL REF
TEST SUPPORT BLDG. EAST WALL COLUMN CENTERLINE REF
MECH. BLDG. EAST WALL COLUMN CENTERLINE REF
GYROTRON POWER SUPPLY WIRING ENVELOPES TO OUTSIDE PAD REF 708371002
7" X 18" ECRH POWER SUPPLY WIRING ENVELOPE UPGRADE REF
36.00 R TYP
52.00 REF
I & C WIRETRAY REF 708378021
12.00 R TYP 2 PLCS
7" X 18" ECRH POWER SUPPLY WIRING ENVELOPE BASELINE REF
8" X 24" WIRETRAY TYP 2 PLACES
I & C WIRETRAY REF 708378021
JT8(JT14) WIRING ENVELOPE REF
A SHT. 2
B SHT. 2
C SHT. 3
N
552.00
550.00
477.00
418.00
257.00
12.00
40.00
60.00
72.00
52.00
32.00
12.00
204.00
184.00
3.00
171.00
281.00
542.00
402.00
561.00
1362.00
568.00
543.00
372.00
285.00
153.00
3.00
60.00
40.00
54.00
45°
284.00
275.00
410.00
573.00
12.00
JT1
JT2
JT3
JT4
JT5
JT6
JT7
JT8
JT9
(JT10)
(JT11)
(JT12)
(JT13)
(JT14)
(JT15)
(JT16)
(JT17)
(JT18)
(JT19)
(JT20)
(JT21)
(JT22)
(JT23)
PLAN VIEW
LEVEL 1 CEILING
FILE: 1056 708371003RE
LAYERS: 9,14,40,41,43,44,45
PLOT SCALE: .0125
PLOT DATE: APR 1, 1982
NOTES:
1. ELEVATIONS OF WIRING ENVELOPES REMAIN CONSTANT INSIDE OF BUILDING UNLESS OTHERWISE NOTED.
2. REFERENCE DESIGNATION DENOTES GYROTRON THIS WIRING ENVELOPE WILL BE ROUTED TO.
2. DIMENSIONS NOTED ARE NOMINAL LOCATIONS ONLY MANUFACTURING TOLERANCES WILL BE APPLIED DURING DETAIL DESIGN.
1. NOMENCLATURE IN PARENTHESIS DENOTE GYROTRON UPGRADE CONDITION.
APPROVED TITLE I
MCDONNELL DOUGLAS ASTRONAUTICS COMPANY ST. LOUIS
EAST LOUIS DIVISION
MCDONNELL DOUGLAS CORPORATION
EBT-P
GYROTRON WIRETRAY
ROUTING ENVELOPE
E
70301
708371003
WBS 2.1.4

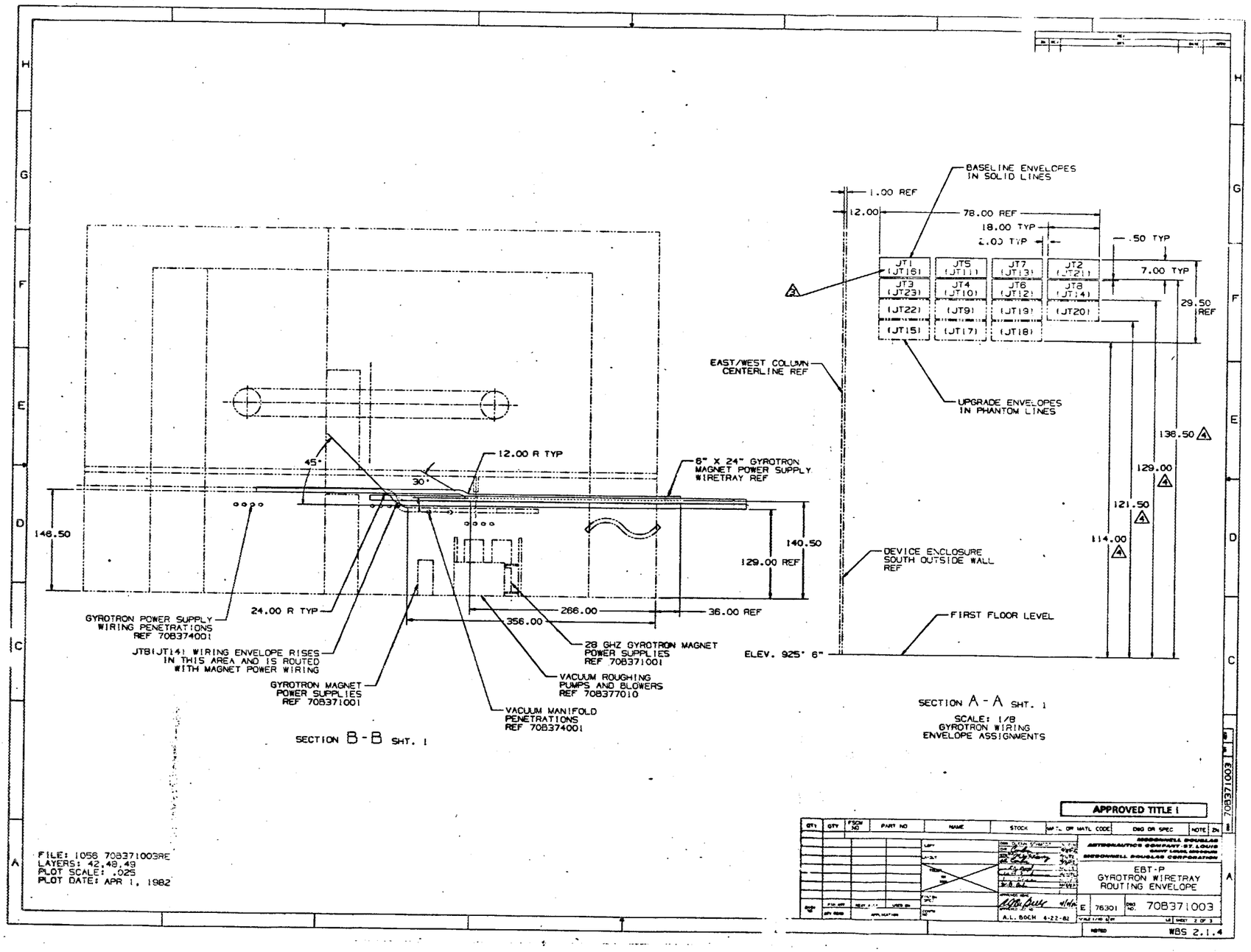
BASELINE ENVELOPES IN SOLID LINES
1.00 REF
12.00
78.00 REF
18.00 TYP
2.00 TYP
.50 TYP
7.00 TYP
29.50 REF
JT1 (JT16)
JT5 (JT11)
JT7 (JT13)
JT2 (JT21)
JT3 (JT23)
JT4 (JT10)
JT6 (JT12)
JT8 (JT14)
(JT22)
(JT9)
(JT19)
(JT20)
(JT15)
(JT17)
(JT18)
EAST/WEST COLUMN CENTERLINE REF
UPGRADE ENVELOPES IN PHANTOM LINES
138.50
129.00
121.50
114.00
DEVICE ENCLOSURE SOUTH OUTSIDE WALL REF
FIRST FLOOR LEVEL
ELEV. 925' 6"
SECTION A - A SHT. 1
SCALE: 1/8
GYROTRON WIRING ENVELOPE ASSIGNMENTS
12.00 R TYP
45°
30°
6" X 24" GYROTRON MAGNET POWER SUPPLY WIRETRAY REF
146.50
140.50
129.00 REF
24.00 R TYP
266.00
36.00 REF
356.00
GYROTRON POWER SUPPLY WIRING PENETRATIONS REF 708374001
JT8(JT14) WIRING ENVELOPE RISES IN THIS AREA AND IS ROUTED WITH MAGNET POWER WIRING
GYROTRON MAGNET POWER SUPPLIES REF 708371001
28 GHZ GYROTRON MAGNET POWER SUPPLIES REF 708371001
VACUUM ROUGHING PUMPS AND BLOWERS REF 708377010
VACUUM MANIFOLD PENETRATIONS REF 708374001
SECTION B - B SHT. 1
FILE: 1056 708371003RE
LAYERS: 42,48,49
PLOT SCALE: .025
PLOT DATE: APR 1, 1982
APPROVED TITLE 1
MCDONNELL DOUGLAS ASTRONAUTICS COMPANY-ST. LOUIS
MCDONNELL DOUGLAS CORPORATION
EBT-P
GYROTRON WIRETRAY
ROUTING ENVELOPE
E 76301
708371003
WBS 2.1.4

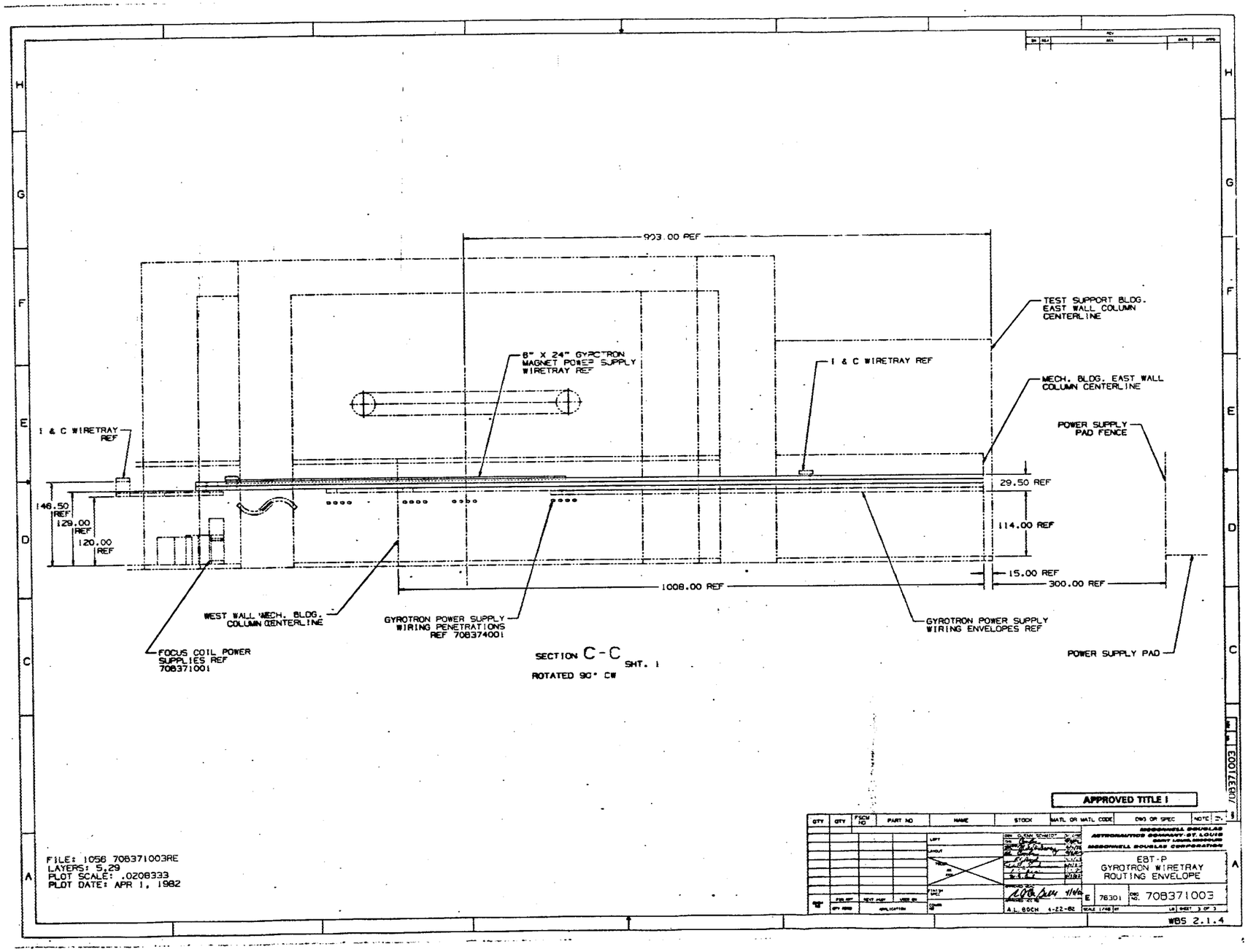
903.00 REF
TEST SUPPORT BLDG. EAST WALL COLUMN CENTERLINE
8" X 24" GYROTRON MAGNET POWER SUPPLY WIRETRAY REF
I & C WIRETRAY REF
MECH. BLDG. EAST WALL COLUMN CENTERLINE
POWER SUPPLY PAD FENCE
I & C WIRETRAY REF
29.50 REF
146.50 REF
129.00 REF
120.00 REF
114.00 REF
15.00 REF
300.00 REF
1008.00 REF
WEST WALL MECH. BLDG. COLUMN CENTERLINE
GYROTRON POWER SUPPLY WIRING PENETRATIONS REF 708374001
GYROTRON POWER SUPPLY WIRING ENVELOPES REF
FOCUS COIL POWER SUPPLIES REF 708371001
POWER SUPPLY PAD
SECTION C-C SHT. 1
ROTATED 90° CW
APPROVED TITLE I
EBT-P
GYROTRON WIRETRAY
ROUTING ENVELOPE
708371003
WBS 2.1.4
FILE: 1056 708371003RE
LAYERS: 5,29
PLOT SCALE: .0208333
PLOT DATE: APR 1, 1982

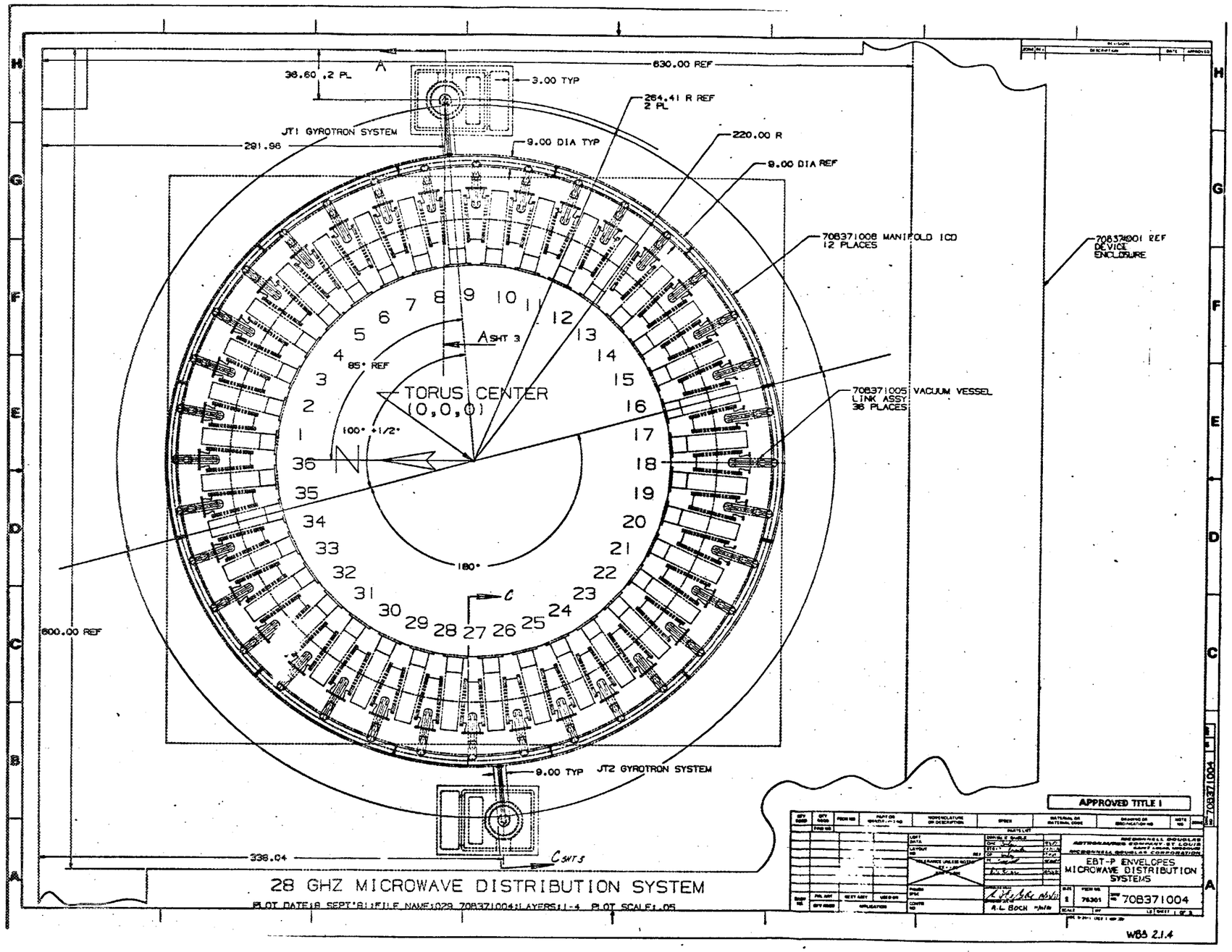
630.00 REF
38.60 .2 PL
3.00 TYP
264.41 R REF
2 PL
JT1 GYROTRON SYSTEM
281.96
9.00 DIA TYP
220.00 R
9.00 DIA REF
708371008 MANIFOLD ICD
12 PLACES
708374001 REF
DEVICE
ENCLOSURE
ASHT 3
85° REF
TORUS CENTER
(0,0,0)
100° +1/2°
708371005 VACUUM VESSEL
LINK ASSY
36 PLACES
180°
C
600.00 REF
9.00 TYP
JT2 GYROTRON SYSTEM
338.04
CSHT 5
28 GHZ MICROWAVE DISTRIBUTION SYSTEM
PLOT DATE:8 SEPT'81;FILE NAME:029 708371004;LAYERS:1-4 PLOT SCALE:.05
APPROVED TITLE I
EBT-P ENVELOPES
MICROWAVE DISTRIBUTION
SYSTEMS
708371004
A.L. BOCH
WBS 2.1.4

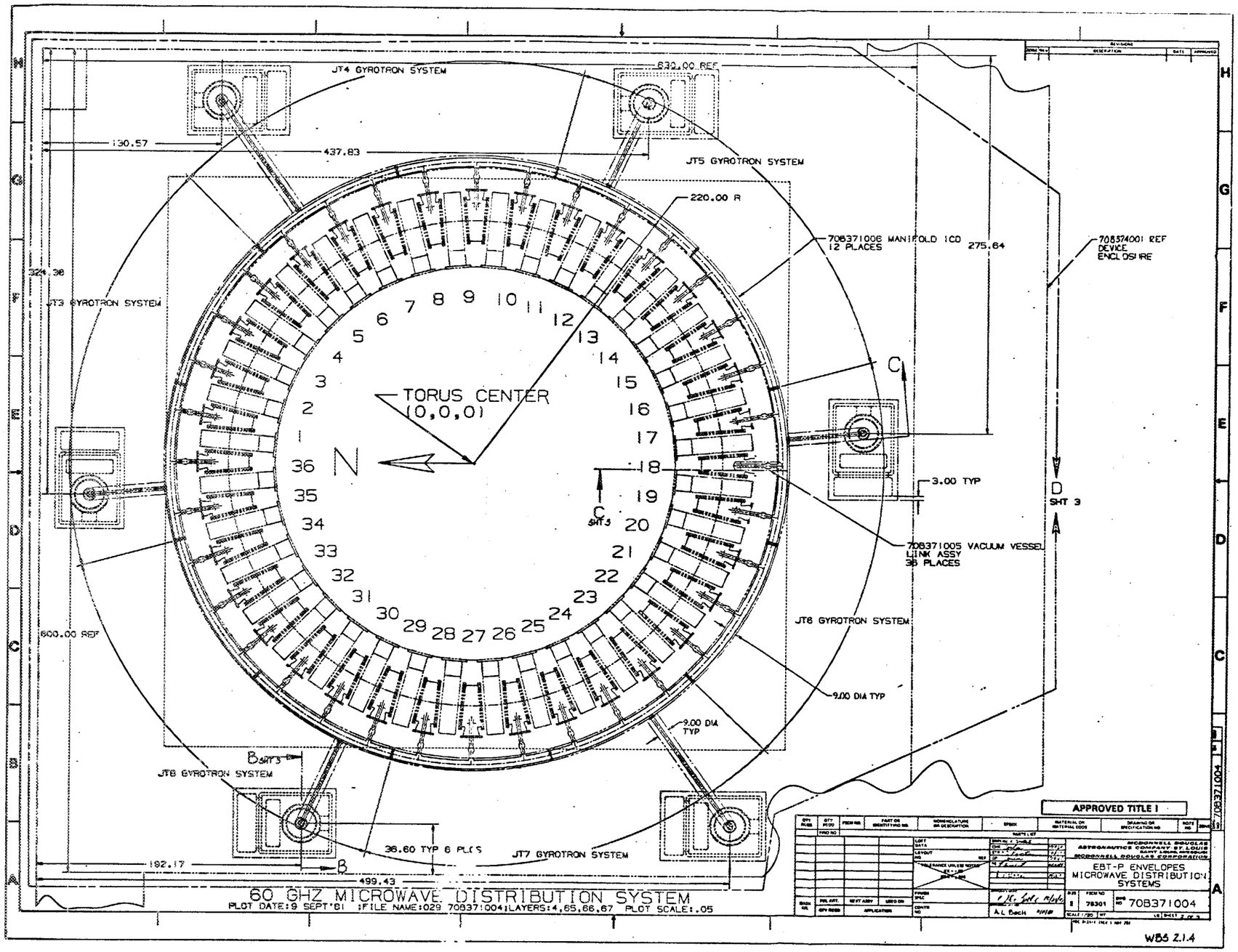
JT4 GYROTRON SYSTEM
630.00 REF
130.57
437.83
JT5 GYROTRON SYSTEM
220.00 R
708371006 MANIFOLD ICD
12 PLACES
275.64
708374001 REF
DEVICE
ENCLOSURE
324.38
JT3 GYROTRON SYSTEM
TORUS CENTER
(0,0,0)
N
C
SHT 3
3.00 TYP
D
SHT 3
708371005 VACUUM VESSEL
LINK ASSY
36 PLACES
JT6 GYROTRON SYSTEM
600.00 REF
9.00 DIA TYP
9.00 DIA
TYP
B
SHT 3
JT8 GYROTRON SYSTEM
36.60 TYP 6 PLCS
JT7 GYROTRON SYSTEM
192.17
499.43
60 GHZ MICROWAVE DISTRIBUTION SYSTEM
PLOT DATE:9 SEPT'81 ;FILE NAME:029 708371004;LAYERS:4,65,66,67 PLOT SCALE:.05
APPROVED TITLE I
MCDONNELL DOUGLAS
ASTRONAUTICS COMPANY ST. LOUIS
EBT-P ENVELOPES
MICROWAVE DISTRIBUTION
SYSTEMS
78301
708371004
A.L. Bach
WBS 2.1.4

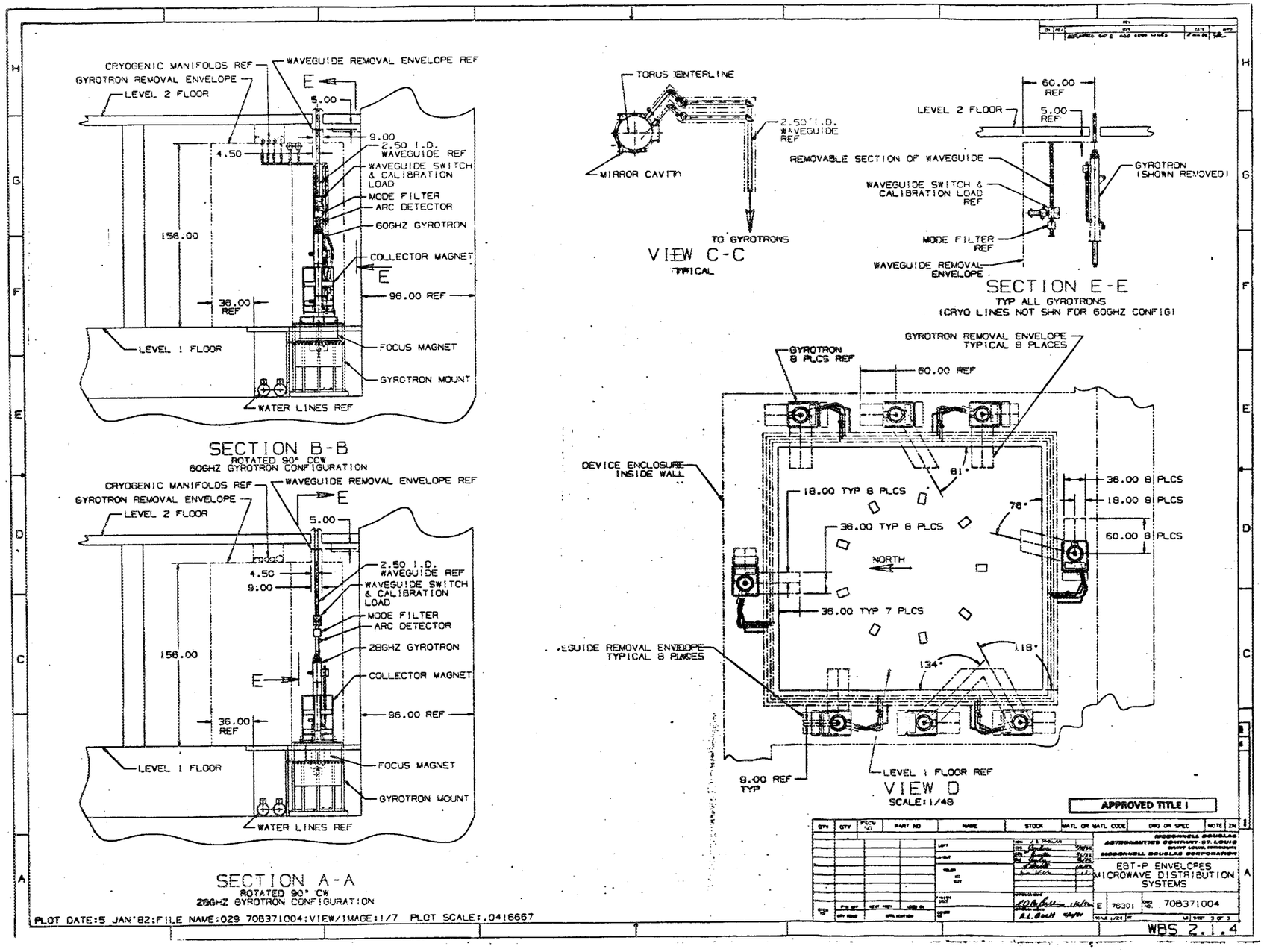
CRYOGENIC MANIFOLDS REF
GYROTRON REMOVAL ENVELOPE
WAVEGUIDE REMOVAL ENVELOPE REF
LEVEL 2 FLOOR
5.00
9.00
4.50
2.50 I.D. WAVEGUIDE REF
WAVEGUIDE SWITCH & CALIBRATION LOAD
MODE FILTER
ARC DETECTOR
60GHZ GYROTRON
156.00
COLLECTOR MAGNET
36.00 REF
96.00 REF
LEVEL 1 FLOOR
FOCUS MAGNET
GYROTRON MOUNT
WATER LINES REF
SECTION B-B
ROTATED 90° CCW
60GHZ GYROTRON CONFIGURATION
CRYOGENIC MANIFOLDS REF
GYROTRON REMOVAL ENVELOPE
WAVEGUIDE REMOVAL ENVELOPE REF
LEVEL 2 FLOOR
5.00
4.50
9.00
2.50 I.D. WAVEGUIDE REF
WAVEGUIDE SWITCH & CALIBRATION LOAD
MODE FILTER
ARC DETECTOR
28GHZ GYROTRON
156.00
COLLECTOR MAGNET
36.00 REF
96.00 REF
LEVEL 1 FLOOR
FOCUS MAGNET
GYROTRON MOUNT
WATER LINES REF
SECTION A-A
ROTATED 90° CW
28GHZ GYROTRON CONFIGURATION
TORUS CENTERLINE
2.50 I.D. WAVEGUIDE REF
MIRROR CAVITY
TO GYROTRONS
VIEW C-C
TYPICAL
60.00 REF
LEVEL 2 FLOOR
5.00 REF
REMOVABLE SECTION OF WAVEGUIDE
GYROTRON (SHOWN REMOVED)
WAVEGUIDE SWITCH & CALIBRATION LOAD REF
MODE FILTER REF
WAVEGUIDE REMOVAL ENVELOPE
SECTION E-E
TYP ALL GYROTRONS
(CRYO LINES NOT SHN FOR 60GHZ CONFIG)
GYROTRON REMOVAL ENVELOPE TYPICAL 8 PLACES
GYROTRON 8 PLCS REF
60.00 REF
DEVICE ENCLOSURE INSIDE WALL
61°
18.00 TYP 8 PLCS
36.00 8 PLCS
18.00 8 PLCS
60.00 8 PLCS
76°
36.00 TYP 8 PLCS
NORTH
36.00 TYP 7 PLCS
WAVEGUIDE REMOVAL ENVELOPE TYPICAL 8 PLACES
134°
118°
9.00 REF TYP
LEVEL 1 FLOOR REF
VIEW D
SCALE: 1/48
APPROVED TITLE I
EBT-P ENVELOPES
MICROWAVE DISTRIBUTION SYSTEMS
708371004
WBS 2.1.4
PLOT DATE:5 JAN'82:FILE NAME:029 708371004:VIEW/IMAGE:1/7 PLOT SCALE:.0416667

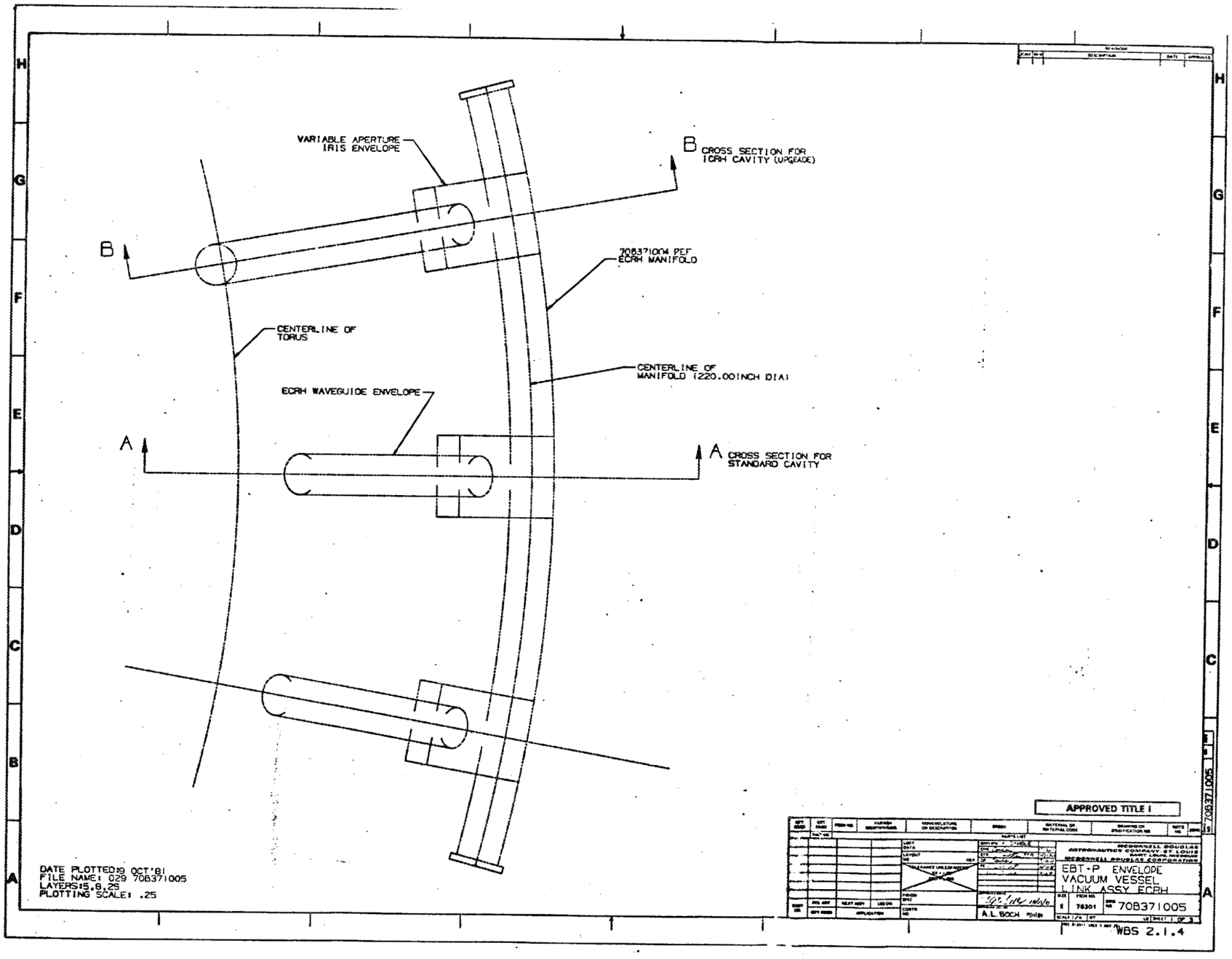
VARIABLE APERTURE IRIS ENVELOPE
B CROSS SECTION FOR ICRH CAVITY (UPGRADE)
B
70B371004 REF ECRH MANIFOLD
CENTERLINE OF TORUS
CENTERLINE OF MANIFOLD (220.00INCH DIA)
ECRH WAVEGUIDE ENVELOPE
A
A CROSS SECTION FOR STANDARD CAVITY
DATE PLOTTED:9 OCT'81
FILE NAME: 029 70B371005
LAYERS:5,8,25
PLOTTING SCALE: .25
APPROVED TITLE I
MCDONNELL DOUGLAS ASTRONAUTICS COMPANY ST. LOUIS
MCDONNELL DOUGLAS CORPORATION
EBT-P ENVELOPE
VACUUM VESSEL
LINK ASSY ECRH
76301
70B371005
A.L. BOCH
WBS 2.1.4

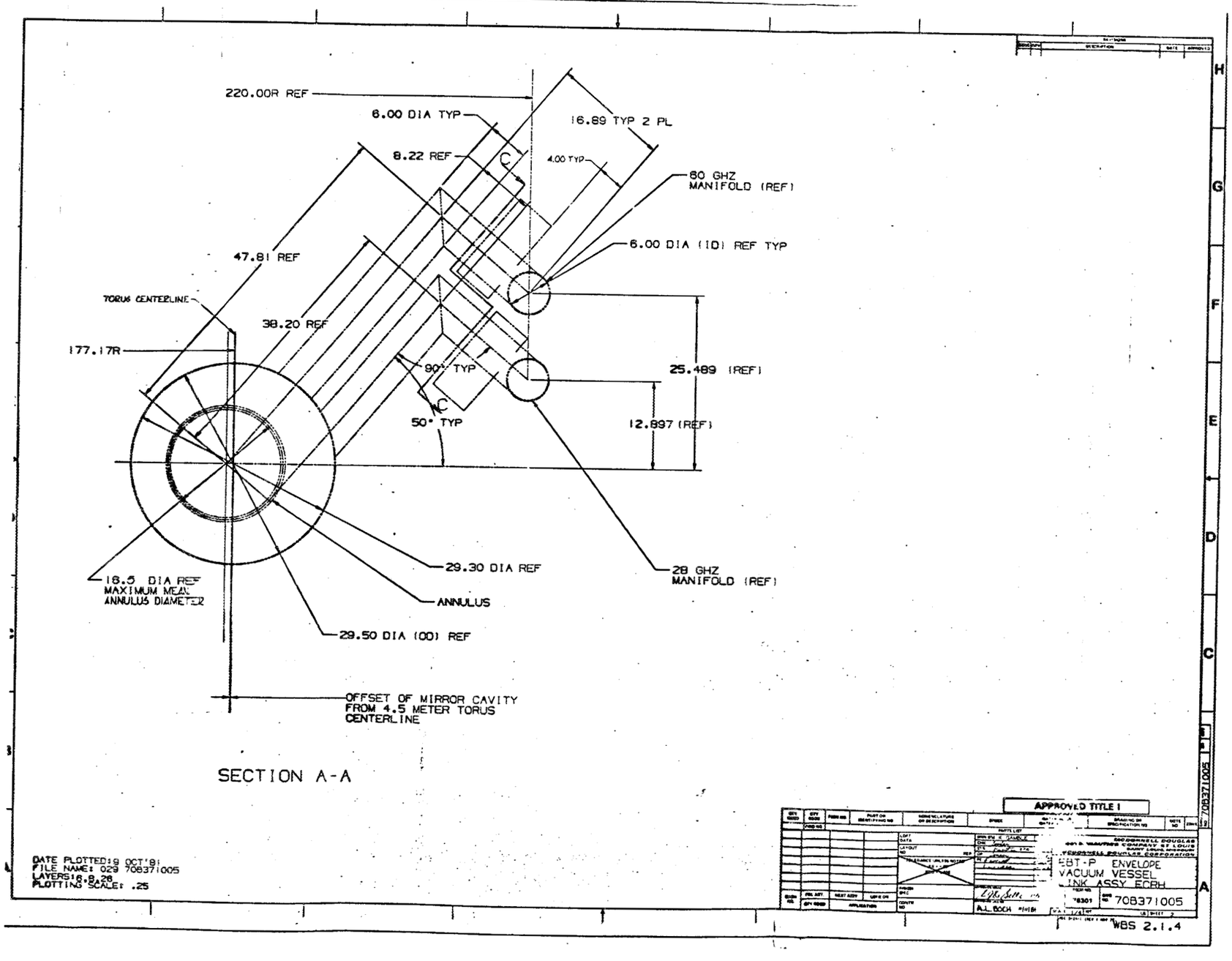
220.00R REF
6.00 DIA TYP
16.89 TYP 2 PL
8.22 REF
4.00 TYP
80 GHZ MANIFOLD (REF)
6.00 DIA (ID) REF TYP
47.81 REF
TORUS CENTERLINE
38.20 REF
177.17R
90° TYP
25.489 (REF)
50° TYP
12.897 (REF)
29.30 DIA REF
28 GHZ MANIFOLD (REF)
18.5 DIA REF MAXIMUM MEAN ANNULUS DIAMETER
ANNULUS
29.50 DIA (OD) REF
OFFSET OF MIRROR CAVITY FROM 4.5 METER TORUS CENTERLINE
SECTION A-A
DATE PLOTTED: 9 OCT '81
FILE NAME: 029 708371005
LAYERS: 8, 28
PLOTTING SCALE: .25
APPROVED TITLE I
EBT-P ENVELOPE
VACUUM VESSEL
INK ASSY ECRH
708371005
WBS 2.1.4

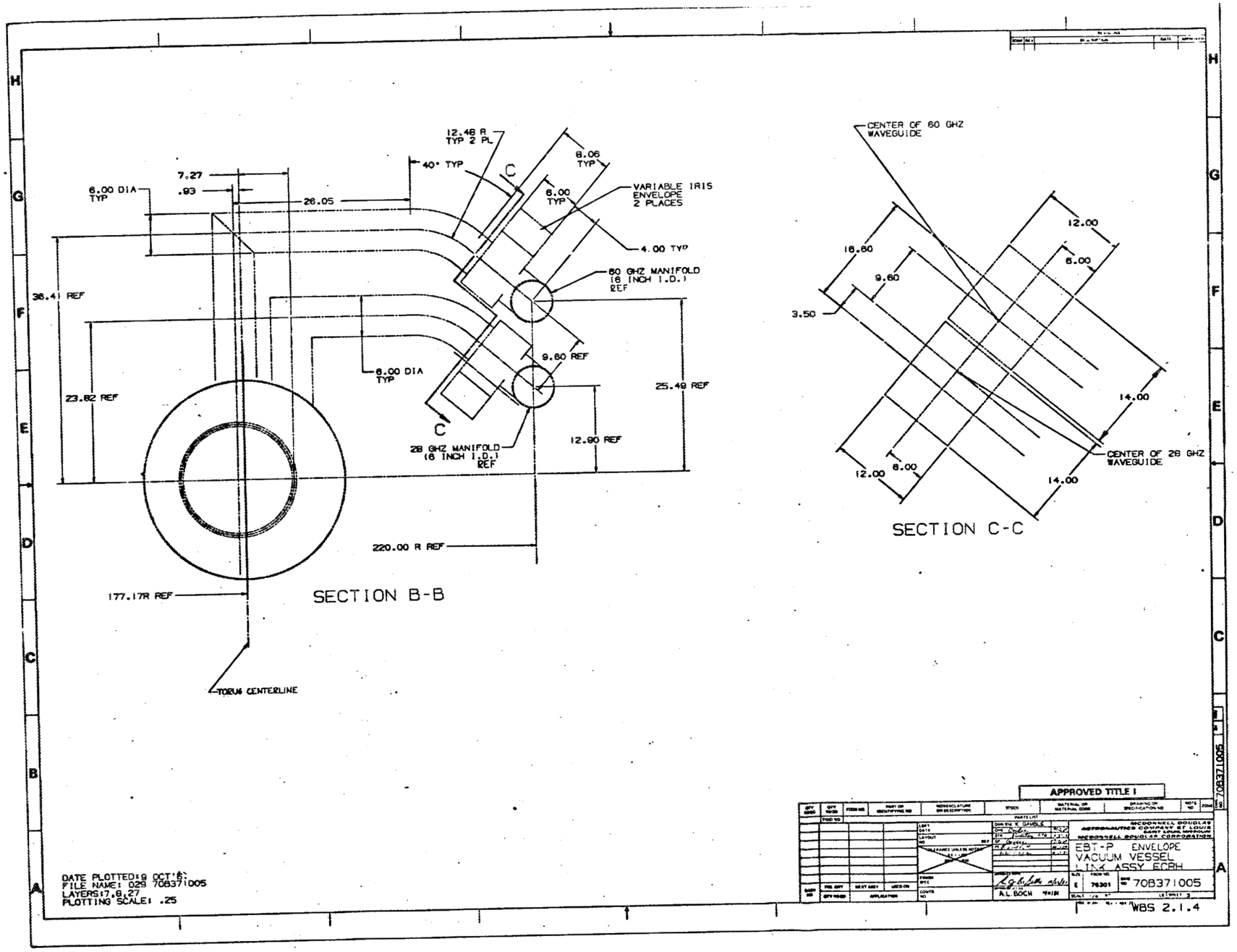
12.48 R
TYP 2 PL
40° TYP
8.06
TYP
7.27
.93
6.00 DIA
TYP
28.05
6.00
TYP
VARIABLE IRIS
ENVELOPE
2 PLACES
4.00 TYP
60 GHZ MANIFOLD
(6 INCH I.D.)
REF
36.41 REF
9.60 REF
6.00 DIA
TYP
25.49 REF
23.82 REF
12.90 REF
28 GHZ MANIFOLD
(6 INCH I.D.)
REF
220.00 R REF
177.17R REF
SECTION B-B
TORUS CENTERLINE
CENTER OF 60 GHZ
WAVEGUIDE
12.00
18.60
6.00
9.60
3.50
14.00
12.00
6.00
14.00
CENTER OF 28 GHZ
WAVEGUIDE
SECTION C-C
APPROVED TITLE I
MCDONNELL DOUGLAS
ASTRONAUTICS COMPANY ST. LOUIS
EAST ADAM DIVISION
MCDONNELL DOUGLAS CORPORATION
EBT-P ENVELOPE
VACUUM VESSEL
LINK ASSY ECRH
A.L. BOCH
70301
708371005
WBS 2.1.4
DATE PLOTTED:19 OCT'8
FILE NAME: 028 708371005
LAYERS:7,8,27
PLOTTING SCALE: .25

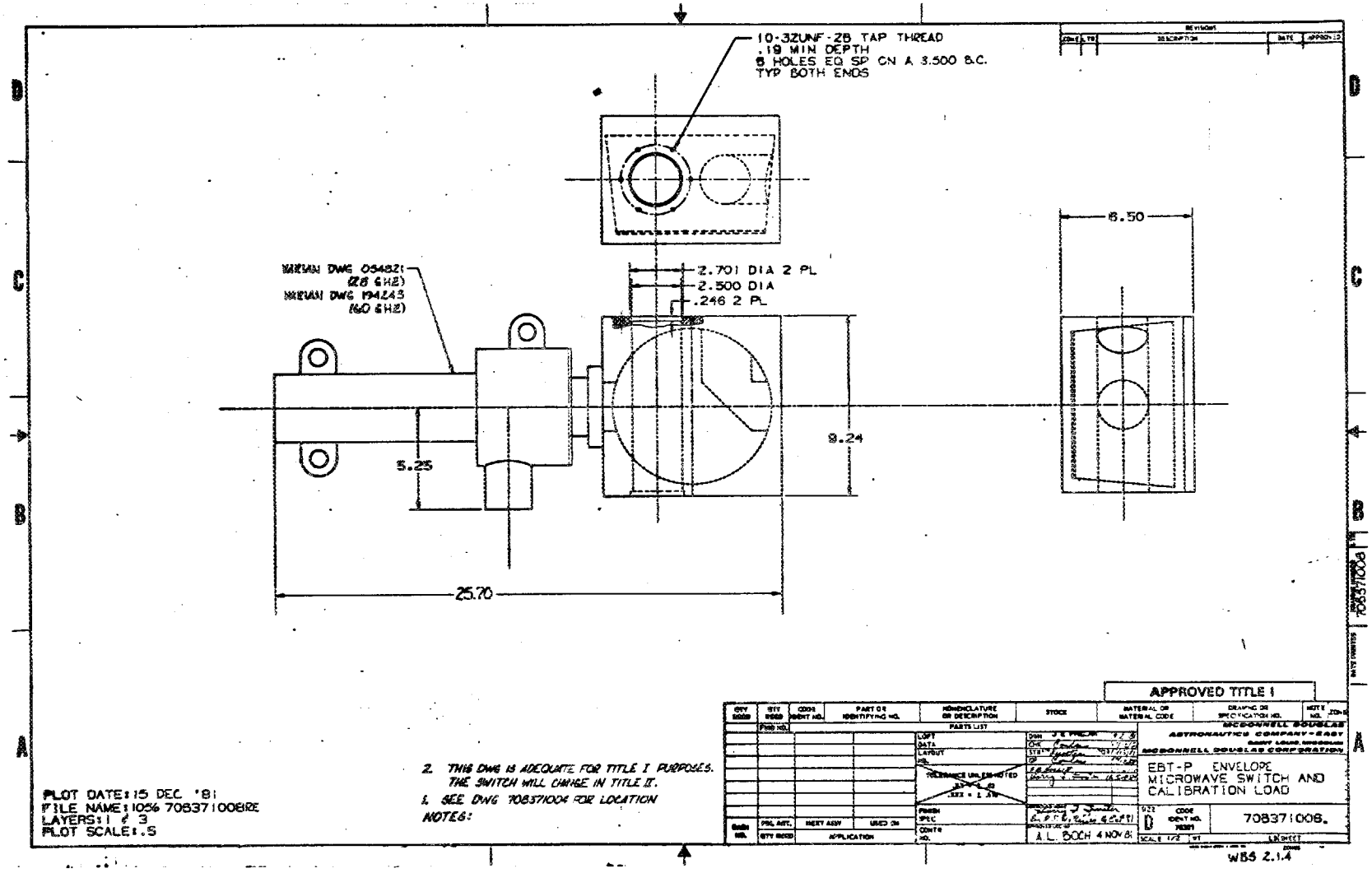
10-32UNF-2B TAP THREAD
.19 MIN DEPTH
8 HOLES EQ SP ON A 3.500 B.C.
TYP BOTH ENDS
MERIAN DWG 054821
(28 GHZ)
MERIAN DWG 194243
(60 GHZ)
2.701 DIA 2 PL
2.500 DIA
.246 2 PL
8.50
9.24
5.25
25.70
APPROVED TITLE I
EBT-P ENVELOPE
MICROWAVE SWITCH AND
CALIBRATION LOAD
708371008.
A.L. BOCH 4 NOV 81
PLOT DATE: 15 DEC '81
FILE NAME: 105% 708371008RE
LAYERS: 1 & 3
PLOT SCALE: .5
2. THIS DWG IS ADEQUATE FOR TITLE I PURPOSES.
THE SWITCH WILL CHANGE IN TITLE II.
1. SEE DWG 708371004 FOR LOCATION
NOTES:
WBS 2.1.4

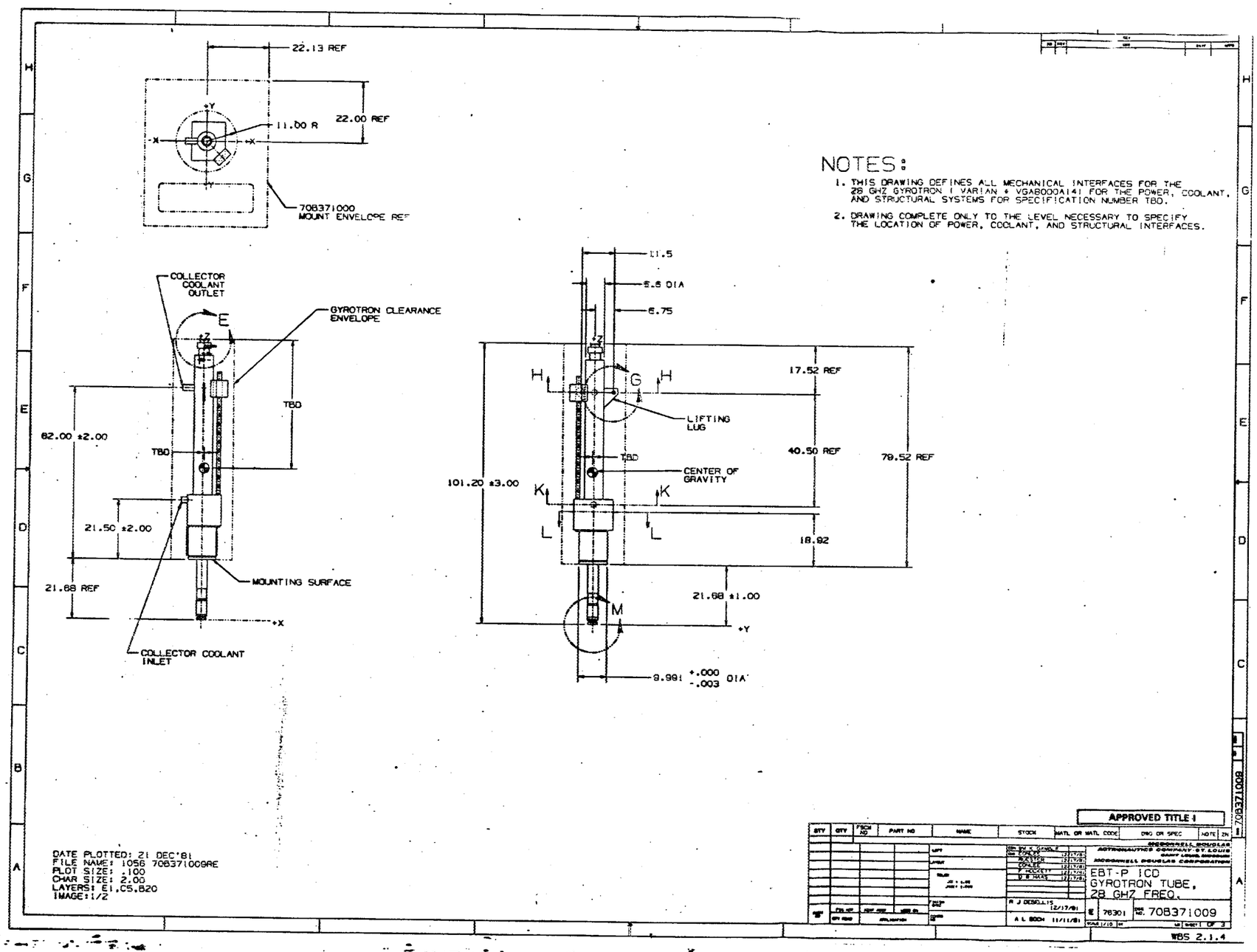
22.13 REF
22.00 REF
11.00 R
+Y
-X
+X
-Y
708371000
MOUNT ENVELOPE REF
NOTES:
1. THIS DRAWING DEFINES ALL MECHANICAL INTERFACES FOR THE 28 GHZ GYROTRON I VARIAN # VGA8000A141 FOR THE POWER, COOLANT, AND STRUCTURAL SYSTEMS FOR SPECIFICATION NUMBER TBD.
2. DRAWING COMPLETE ONLY TO THE LEVEL NECESSARY TO SPECIFY THE LOCATION OF POWER, COOLANT, AND STRUCTURAL INTERFACES.
COLLECTOR COOLANT OUTLET
GYROTRON CLEARANCE ENVELOPE
E
+Z
TBD
82.00 ±2.00
TBD
21.50 ±2.00
21.68 REF
MOUNTING SURFACE
+X
COLLECTOR COOLANT INLET
11.5
5.5 DIA
6.75
H
G
H
17.52 REF
LIFTING LUG
40.50 REF
79.52 REF
TBD
CENTER OF GRAVITY
101.20 ±3.00
K
K
L
L
18.92
21.68 ±1.00
M
+Y
3.991 +.000 -.003 DIA
DATE PLOTTED: 21 DEC'81
FILE NAME: 1056 708371009RE
PLOT SIZE: .100
CHAR SIZE: 2.00
LAYERS: E1,C5,B20
IMAGE:1/2
APPROVED TITLE I
EBT-P ICD
GYROTRON TUBE,
28 GHZ FREQ.
76301
708371009
WBS 2.1.4

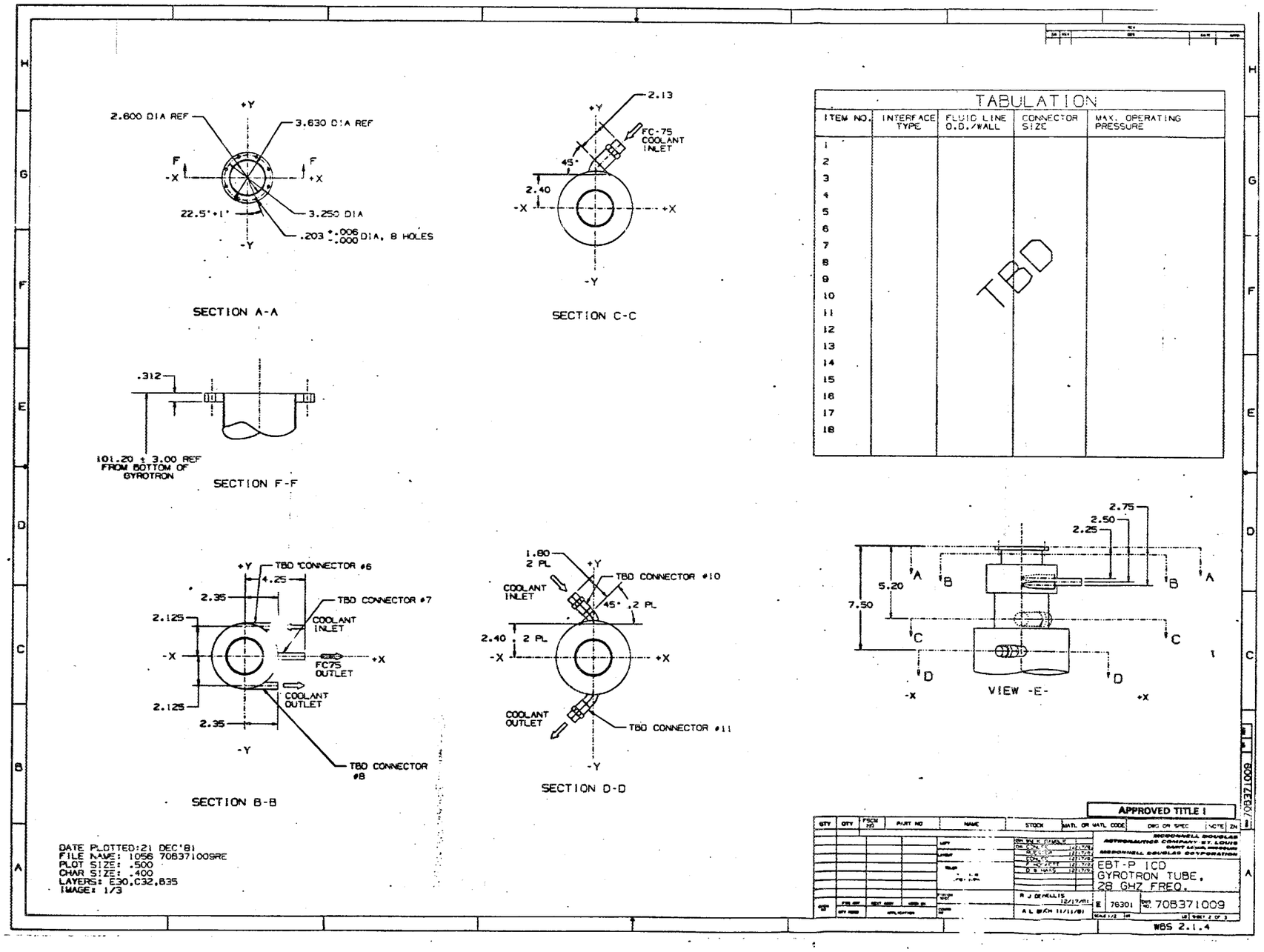
2.600 DIA REF
3.630 DIA REF
+Y
-Y
-X
+X
F
22.5°±1°
3.250 DIA
.203 +.006 -.000 DIA, 8 HOLES
SECTION A-A
2.13
FC-75 COOLANT INLET
45°
2.40
SECTION C-C
.312
101.20 ± 3.00 REF FROM BOTTOM OF GYROTRON
SECTION F-F
TBD CONNECTOR #6
4.25
2.35
TBD CONNECTOR #7
COOLANT INLET
2.125
FC75 OUTLET
COOLANT OUTLET
TBD CONNECTOR #8
SECTION B-B
1.80 2 PL
TBD CONNECTOR #10
.2 PL
2.40 2 PL
COOLANT OUTLET
TBD CONNECTOR #11
SECTION D-D
2.75
2.50
2.25
5.20
7.50
A
B
C
D
VIEW -E-
TABULATION
ITEM NO.
INTERFACE TYPE
FLUID LINE O.D./WALL
CONNECTOR SIZE
MAX. OPERATING PRESSURE
1
2
3
4
5
6
7
8
9
10
11
12
13
14
15
16
17
18
TBD
DATE PLOTTED:21 DEC'81
FILE NAME: 1056 708371009RE
PLOT SIZE: .500
CHAR SIZE: .400
LAYERS: E30,C32,B35
IMAGE: 1/3
APPROVED TITLE I
EBT-P ICD
GYROTRON TUBE,
28 GHZ FREQ.
76301
708371009
WBS 2.1.4

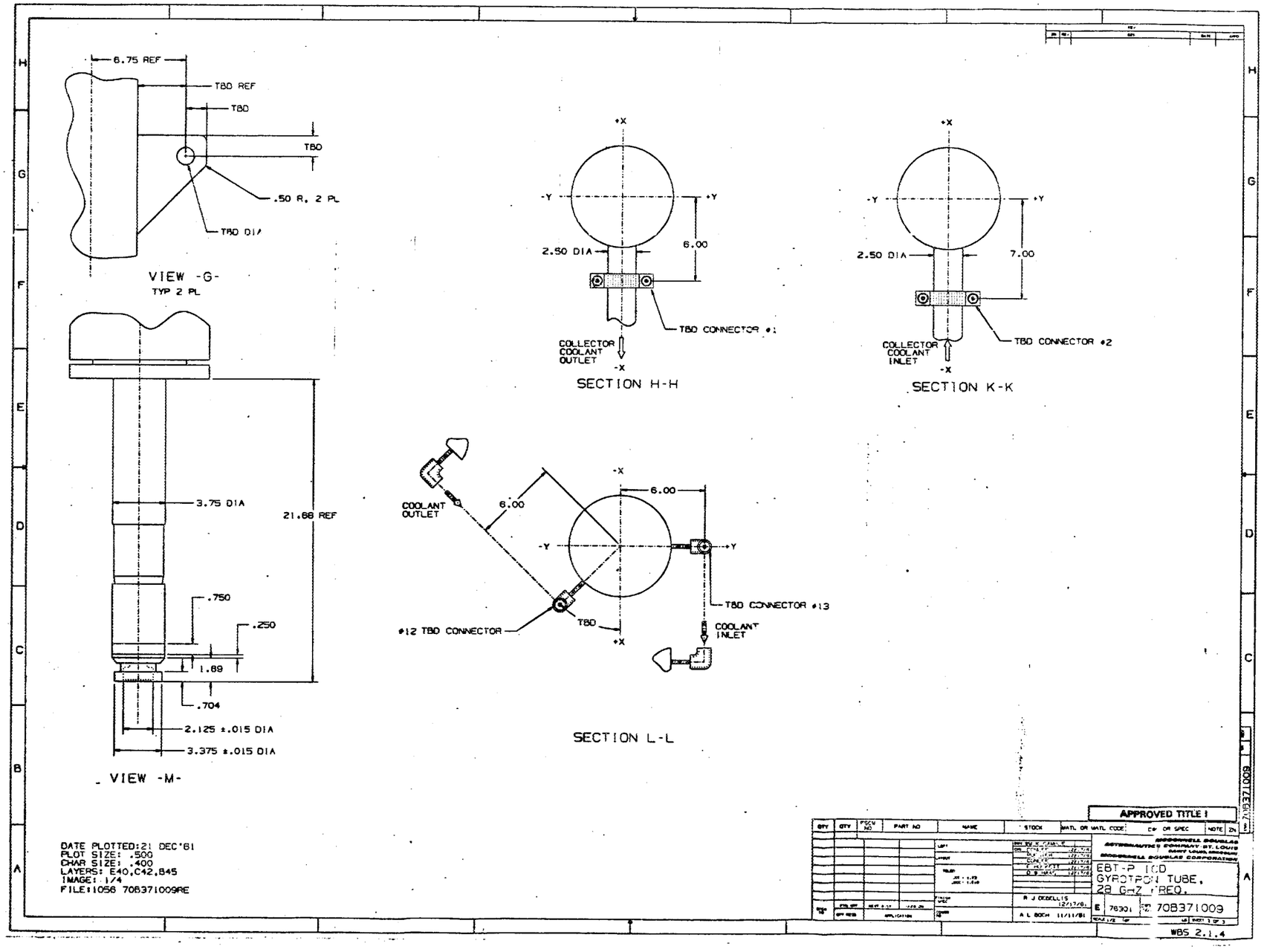
6.75 REF
TBD REF
TBD
TBD
.50 R, 2 PL
TBD DIA
VIEW -G-
TYP 2 PL
3.75 DIA
21.68 REF
.750
.250
1.69
.704
2.125 ±.015 DIA
3.375 ±.015 DIA
VIEW -M-
+X
-Y
+Y
2.50 DIA
6.00
TBD CONNECTOR #1
COLLECTOR COOLANT OUTLET
-X
SECTION H-H
+X
-Y
+Y
2.50 DIA
7.00
TBD CONNECTOR #2
COLLECTOR COOLANT INLET
-X
SECTION K-K
COOLANT OUTLET
6.00
-X
6.00
-Y
+Y
TBD CONNECTOR #13
#12 TBD CONNECTOR
TBD
COOLANT INLET
+X
SECTION L-L
DATE PLOTTED:21 DEC'81
PLOT SIZE: .500
CHAR SIZE: .400
LAYERS: E40,C42,845
IMAGE: 1/4
FILE:1056 708371009RE
APPROVED TITLE I
MCDONNELL DOUGLAS ASTRONAUTICS COMPANY ST. LOUIS
MCDONNELL DOUGLAS CORPORATION
EBT-P 100
GYROTRON TUBE,
28 GHZ FREQ.
E 76301
708371009
WBS 2.1.4

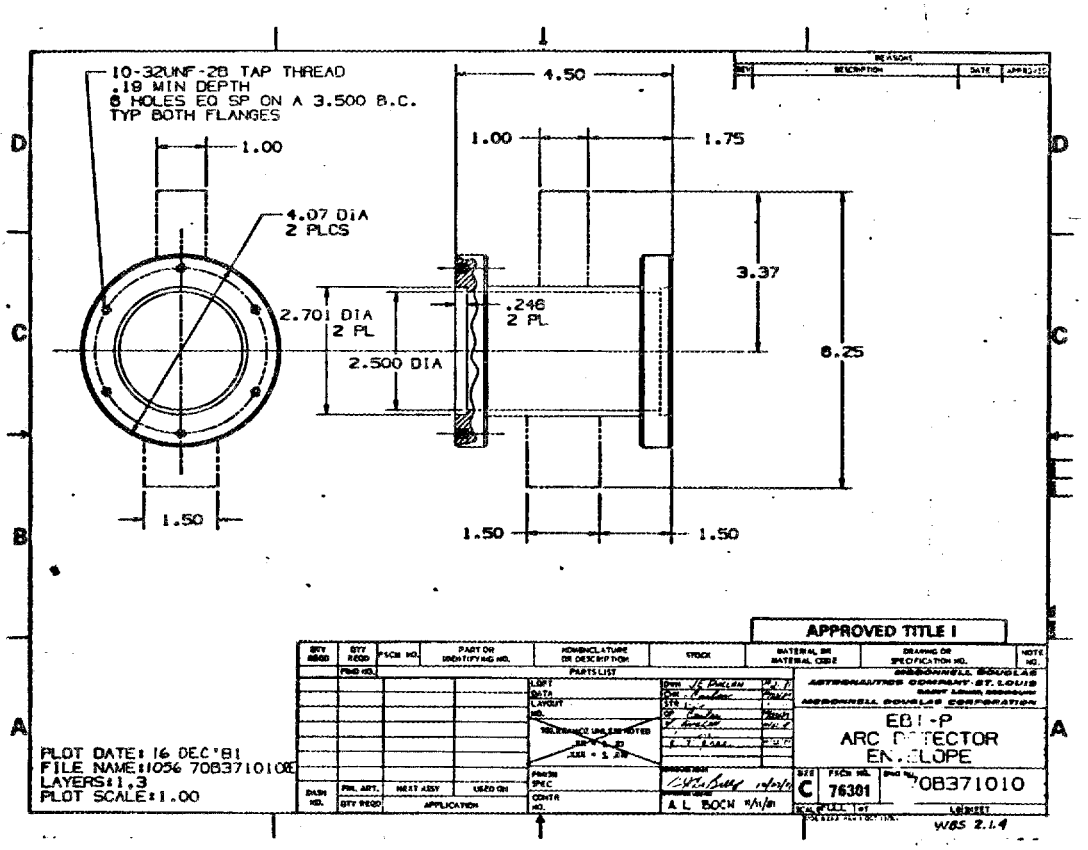
10-32UNF-2B TAP THREAD
.19 MIN DEPTH
6 HOLES EQ SP ON A 3.500 B.C.
TYP BOTH FLANGES
1.00
4.07 DIA
2 PLCS
2.701 DIA
2 PL
2.500 DIA
1.50
4.50
1.00
1.75
.246
2 PL
3.37
8.25
1.50
1.50
APPROVED TITLE I
PARTS LIST
EBT-P
ARC DETECTOR
ENVELOPE
C
76301
708371010
A L BOCH
PLOT DATE: 16 DEC '81
FILE NAME: 1056 708371010B
LAYERS: 1,3
PLOT SCALE: 1.00

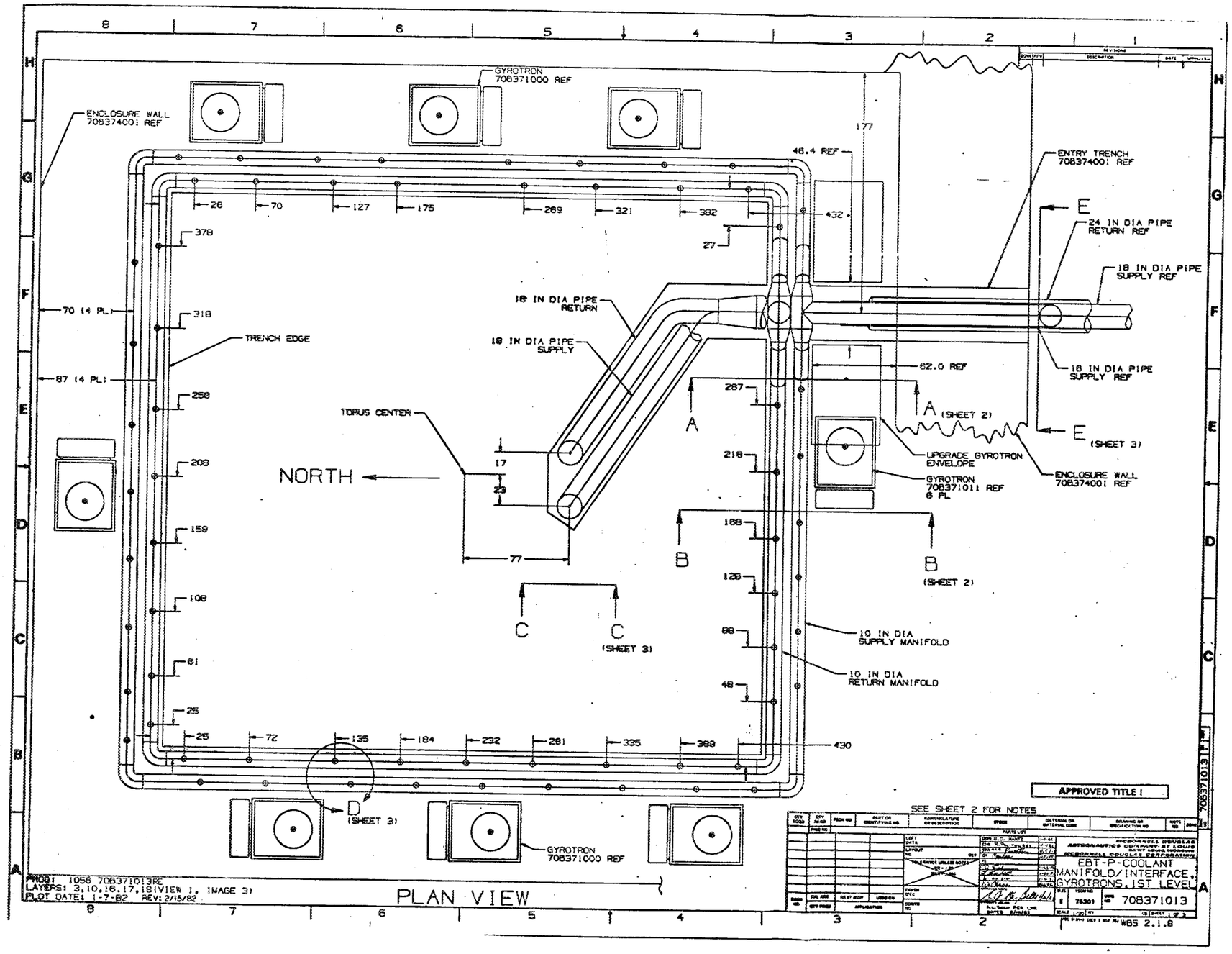
GYROTRON 708371000 REF
ENCLOSURE WALL 708374001 REF
ENTRY TRENCH 708374001 REF
24 IN DIA PIPE RETURN REF
18 IN DIA PIPE SUPPLY REF
18 IN DIA PIPE RETURN
18 IN DIA PIPE SUPPLY
TRENCH EDGE
TORUS CENTER
NORTH
UPGRADE GYROTRON ENVELOPE
GYROTRON 708371011 REF 6 PL
10 IN DIA SUPPLY MANIFOLD
10 IN DIA RETURN MANIFOLD
A (SHEET 2)
E (SHEET 3)
B (SHEET 2)
C (SHEET 3)
D (SHEET 3)
SEE SHEET 2 FOR NOTES
APPROVED TITLE I
EBT-P-COOLANT MANIFOLD/INTERFACE, GYROTRONS, 1ST LEVEL
708371013
WBS 2.1.8
PLAN VIEW

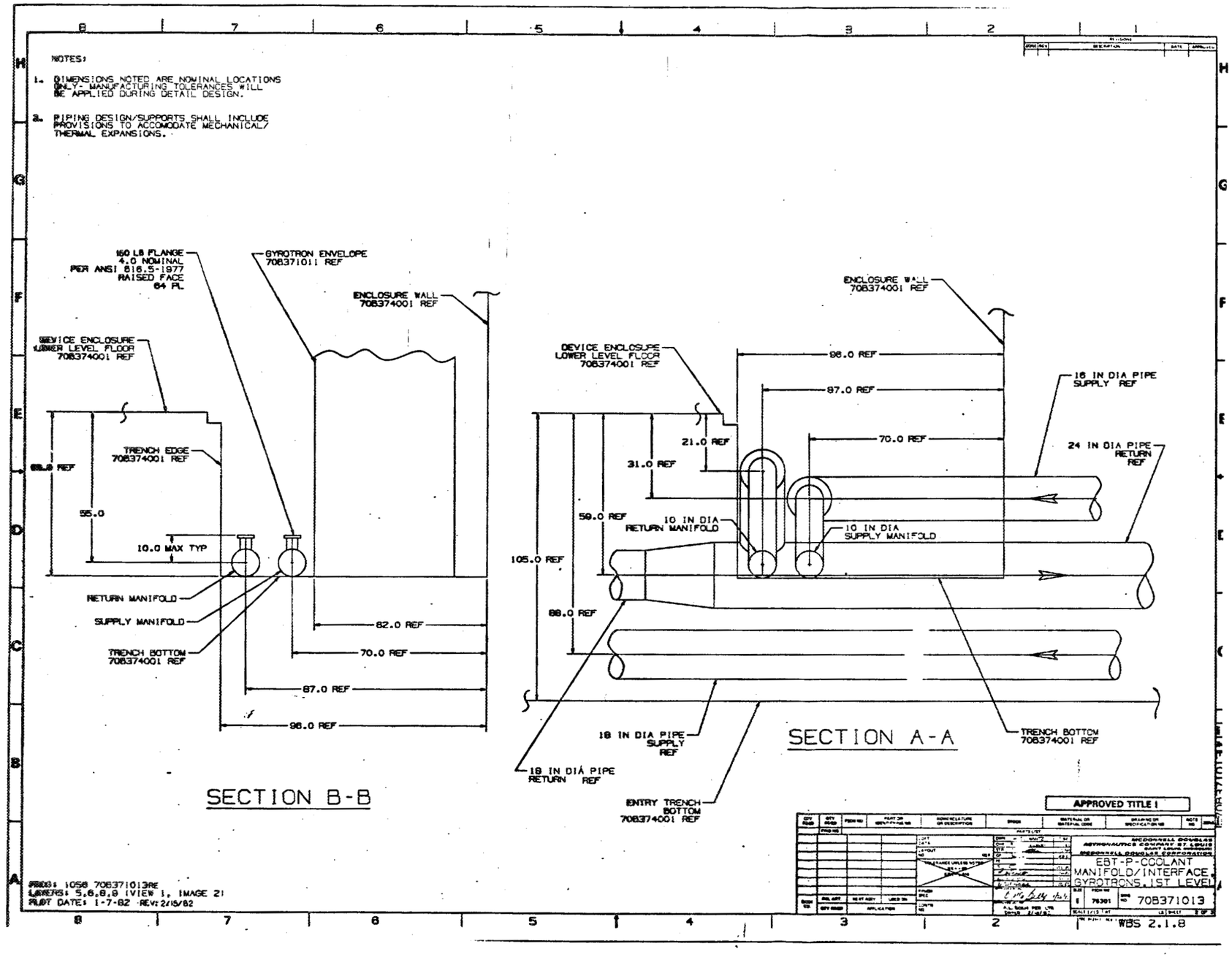
NOTES:
1. DIMENSIONS NOTED ARE NOMINAL LOCATIONS ONLY- MANUFACTURING TOLERANCES WILL BE APPLIED DURING DETAIL DESIGN.
2. PIPING DESIGN/SUPPORTS SHALL INCLUDE PROVISIONS TO ACCOMODATE MECHANICAL/ THERMAL EXPANSIONS.
150 LB FLANGE 4.0 NOMINAL PER ANSI B16.5-1977 RAISED FACE 64 FL
GYROTRON ENVELOPE 708371011 REF
ENCLOSURE WALL 708374001 REF
DEVICE ENCLOSURE LOWER LEVEL FLOOR 708374001 REF
TRENCH EDGE 708374001 REF
55.0
10.0 MAX TYP
RETURN MANIFOLD
SUPPLY MANIFOLD
TRENCH BOTTOM 708374001 REF
82.0 REF
70.0 REF
87.0 REF
98.0 REF
SECTION B-B
ENCLOSURE WALL 708374001 REF
DEVICE ENCLOSURE LOWER LEVEL FLOOR 708374001 REF
98.0 REF
87.0 REF
70.0 REF
21.0 REF
31.0 REF
59.0 REF
105.0 REF
88.0 REF
16 IN DIA PIPE SUPPLY REF
24 IN DIA PIPE RETURN REF
10 IN DIA RETURN MANIFOLD
10 IN DIA SUPPLY MANIFOLD
18 IN DIA PIPE SUPPLY REF
18 IN DIA PIPE RETURN REF
ENTRY TRENCH BOTTOM 708374001 REF
TRENCH BOTTOM 708374001 REF
SECTION A-A
APPROVED TITLE I
MCDONNELL DOUGLAS ASTRONAUTICS COMPANY ST LOUIS
MCDONNELL DOUGLAS CORPORATION
EBT-P-COOLANT MANIFOLD/INTERFACE GYROTRONS, 1ST LEVEL
708371013
WBS 2.1.8
FRAME: 1058 708371013RE
LAYERS: 5,6,8,9 (VIEW 1, IMAGE 2)
PLOT DATE: 1-7-82 REV: 2/15/82

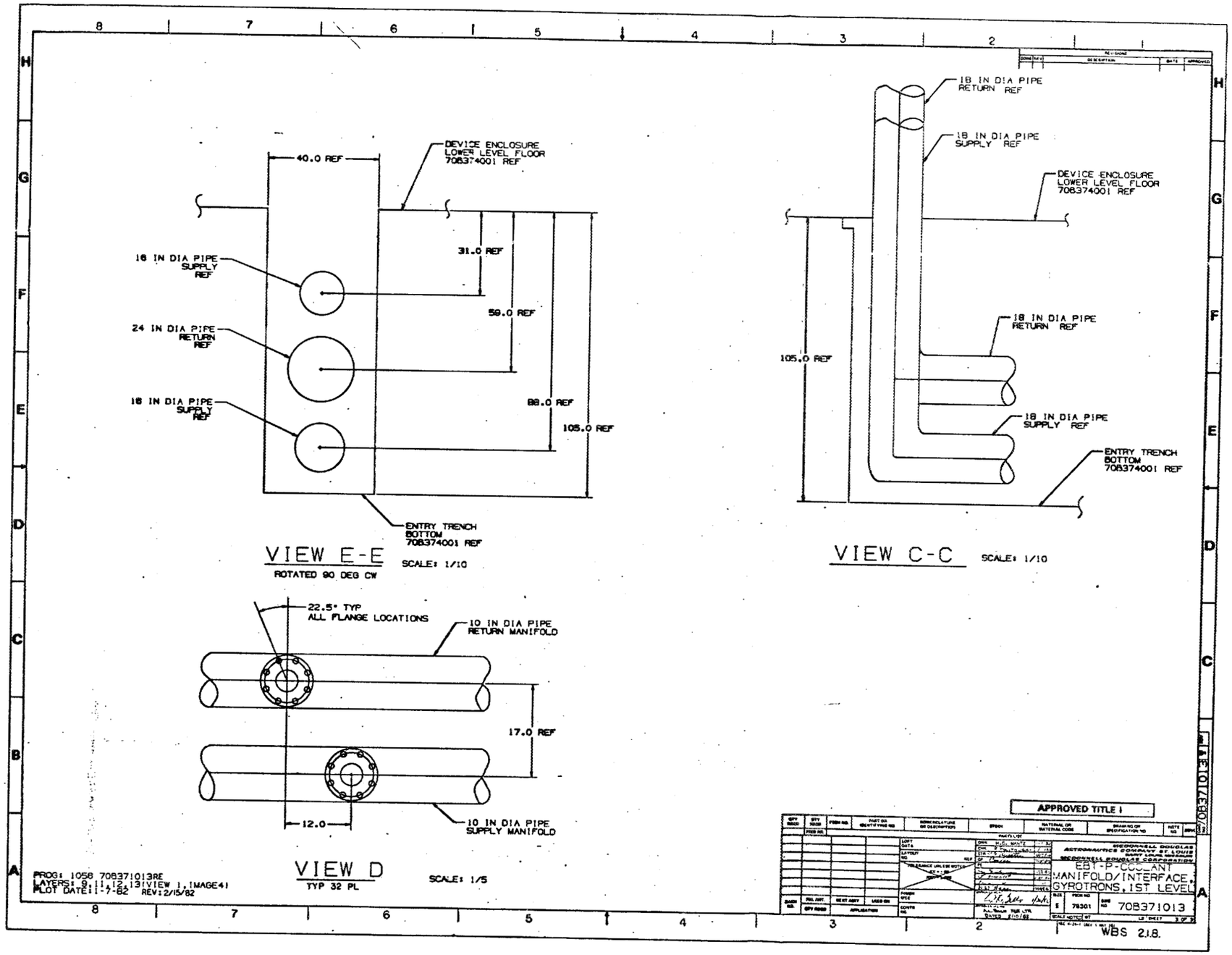
DEVICE ENCLOSURE LOWER LEVEL FLOOR 708374001 REF
40.0 REF
31.0 REF
59.0 REF
88.0 REF
105.0 REF
18 IN DIA PIPE SUPPLY REF
24 IN DIA PIPE RETURN REF
18 IN DIA PIPE SUPPLY REF
ENTRY TRENCH BOTTOM 708374001 REF
VIEW E-E
ROTATED 90 DEG CW
SCALE: 1/10
18 IN DIA PIPE RETURN REF
18 IN DIA PIPE SUPPLY REF
DEVICE ENCLOSURE LOWER LEVEL FLOOR 708374001 REF
105.0 REF
18 IN DIA PIPE RETURN REF
18 IN DIA PIPE SUPPLY REF
ENTRY TRENCH BOTTOM 708374001 REF
VIEW C-C
SCALE: 1/10
22.5° TYP ALL FLANGE LOCATIONS
10 IN DIA PIPE RETURN MANIFOLD
17.0 REF
12.0
10 IN DIA PIPE SUPPLY MANIFOLD
VIEW D
TYP 32 PL
SCALE: 1/5
PROG: 1056 708371013RE
LAYERS: 0,11,12,131VIEW 1,IMAGE41
PLOT DATE: 1-7-82 REV: 2/15/82
APPROVED TITLE I
MCDONNELL DOUGLAS ASTRONAUTICS COMPANY ST LOUIS
MCDONNELL DOUGLAS CORPORATION
EBT-P-COOLANT MANIFOLD/INTERFACE, GYROTRONS, 1ST LEVEL
78301
708371013
WBS 2.1.8.

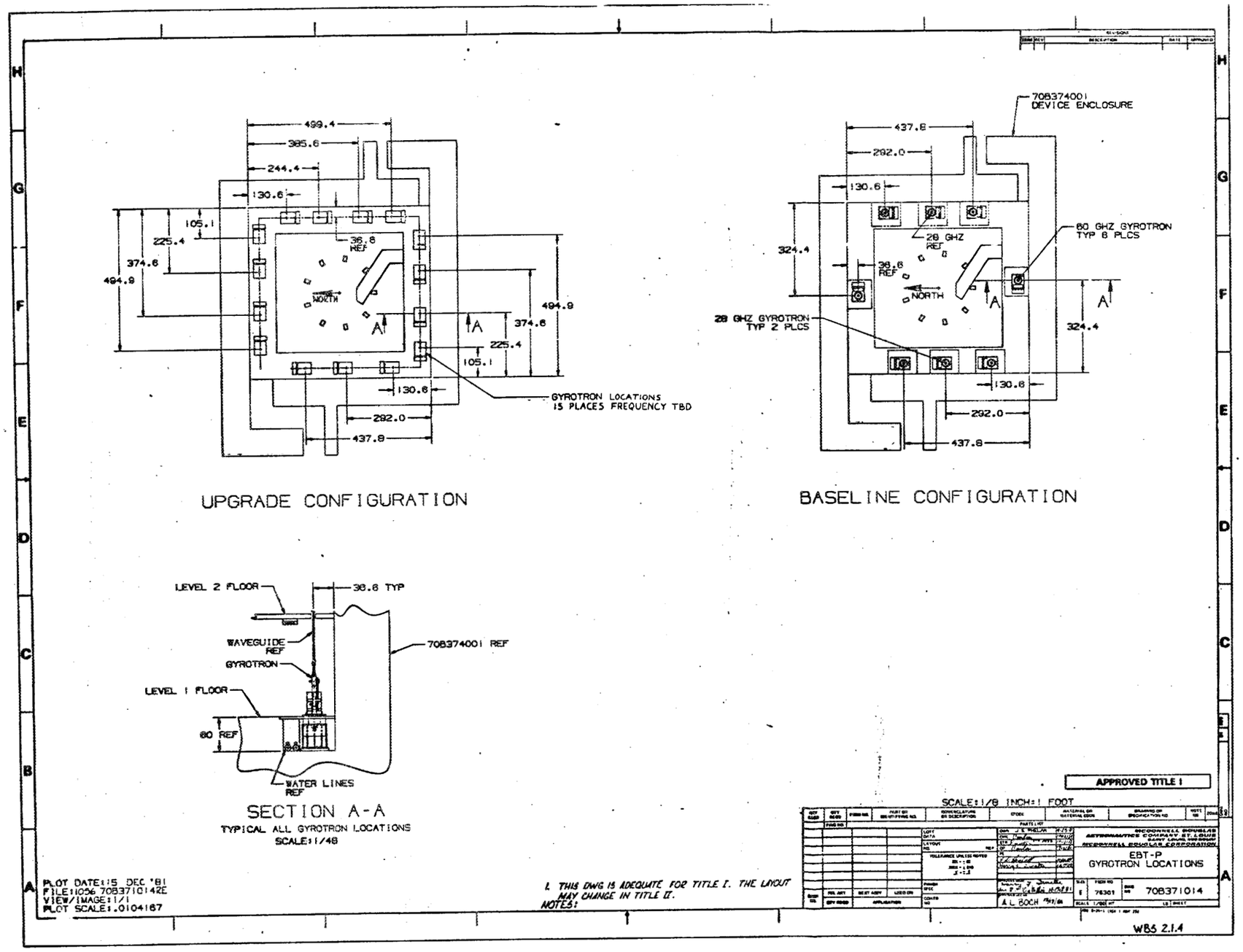
499.4
385.6
244.4
130.6
105.1
225.4
374.6
494.9
38.6 REF
NORTH
A
A
494.9
374.6
225.4
105.1
130.6
292.0
437.8
GYROTRON LOCATIONS
15 PLACES FREQUENCY TBD
UPGRADE CONFIGURATION
708374001
DEVICE ENCLOSURE
437.8
292.0
130.6
60 GHZ GYROTRON
TYP 8 PLCS
28 GHZ
REF
324.4
38.6
REF
NORTH
A
A
28 GHZ GYROTRON
TYP 2 PLCS
324.4
130.6
292.0
437.8
BASELINE CONFIGURATION
LEVEL 2 FLOOR
38.6 TYP
WAVEGUIDE
REF
GYROTRON
708374001 REF
LEVEL 1 FLOOR
80 REF
WATER LINES
REF
SECTION A-A
TYPICAL ALL GYROTRON LOCATIONS
SCALE:1/48
APPROVED TITLE I
SCALE:1/8 INCH=1 FOOT
PLOT DATE:15 DEC '81
FILE:1056 708371014E
VIEW/IMAGE:1/1
PLOT SCALE:.0104167
1. THIS DWG IS ADEQUATE FOR TITLE I. THE LAYOUT MAY CHANGE IN TITLE II.
NOTES:
MCDONNELL DOUGLAS ASTRONAUTICS COMPANY ST. LOUIS
MCDONNELL DOUGLAS CORPORATION
EBT-P
GYROTRON LOCATIONS
76301
708371014
A L BOCH
WBS 2.1.4

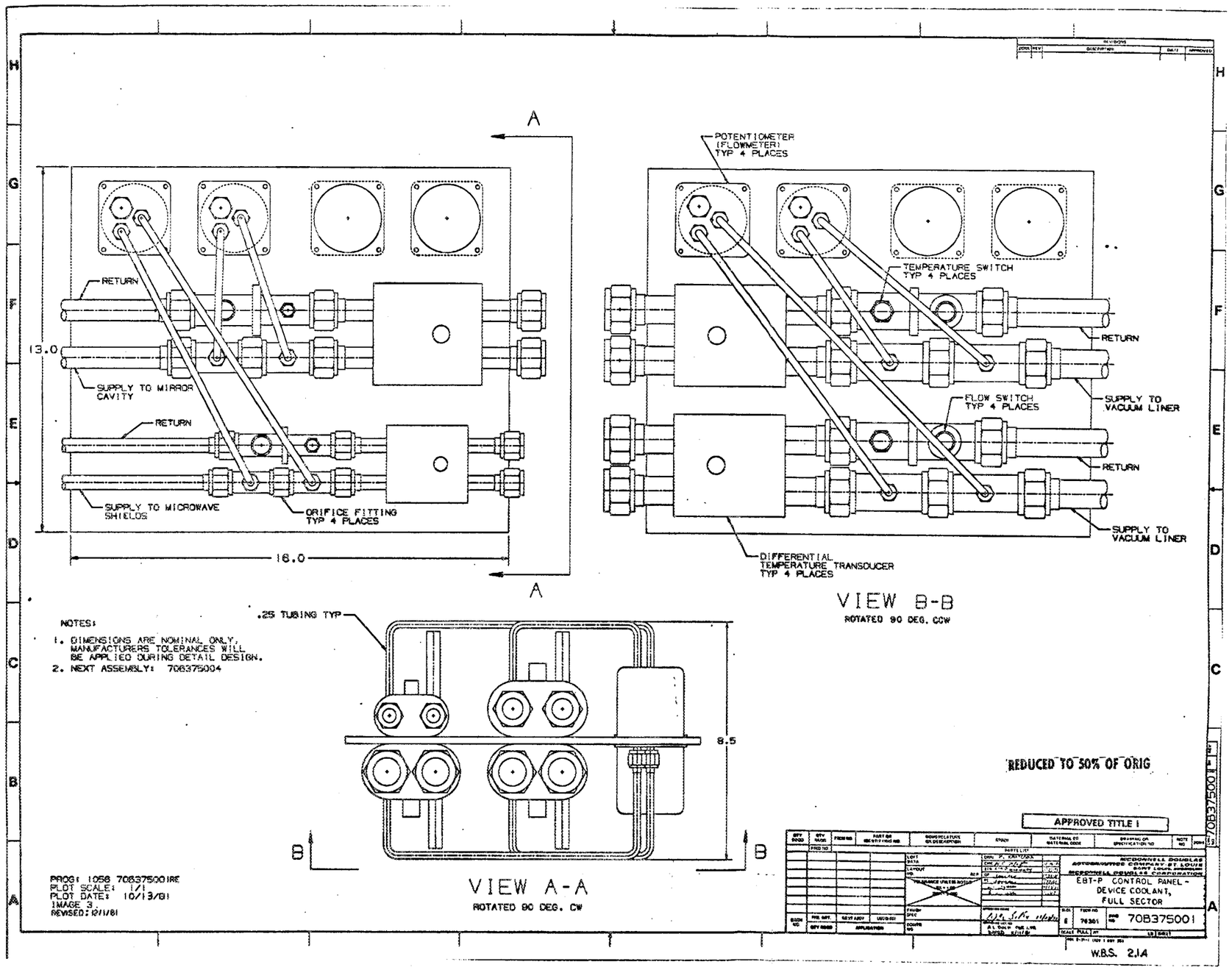
A
RETURN
13.0
SUPPLY TO MIRROR CAVITY
RETURN
SUPPLY TO MICROWAVE SHIELDS
ORIFICE FITTING TYP 4 PLACES
16.0
A
POTENTIOMETER (FLOWMETER) TYP 4 PLACES
TEMPERATURE SWITCH TYP 4 PLACES
RETURN
FLOW SWITCH TYP 4 PLACES
SUPPLY TO VACUUM LINER
RETURN
SUPPLY TO VACUUM LINER
DIFFERENTIAL TEMPERATURE TRANSDUCER TYP 4 PLACES
VIEW B-B
ROTATED 90 DEG. CCW
NOTES:
1. DIMENSIONS ARE NOMINAL ONLY, MANUFACTURERS TOLERANCES WILL BE APPLIED DURING DETAIL DESIGN.
2. NEXT ASSEMBLY: 708375004
.25 TUBING TYP
8.5
B
B
VIEW A-A
ROTATED 90 DEG. CW
REDUCED TO 50% OF ORIG
APPROVED TITLE I
EBT-P CONTROL PANEL - DEVICE COOLANT, FULL SECTOR
708375001
W.B.S. 2.1.4
PROG: 1058 708375001RE
PLOT SCALE: 1/1
PLOT DATE: 10/13/81
IMAGE 3
REVISED: 12/11/81

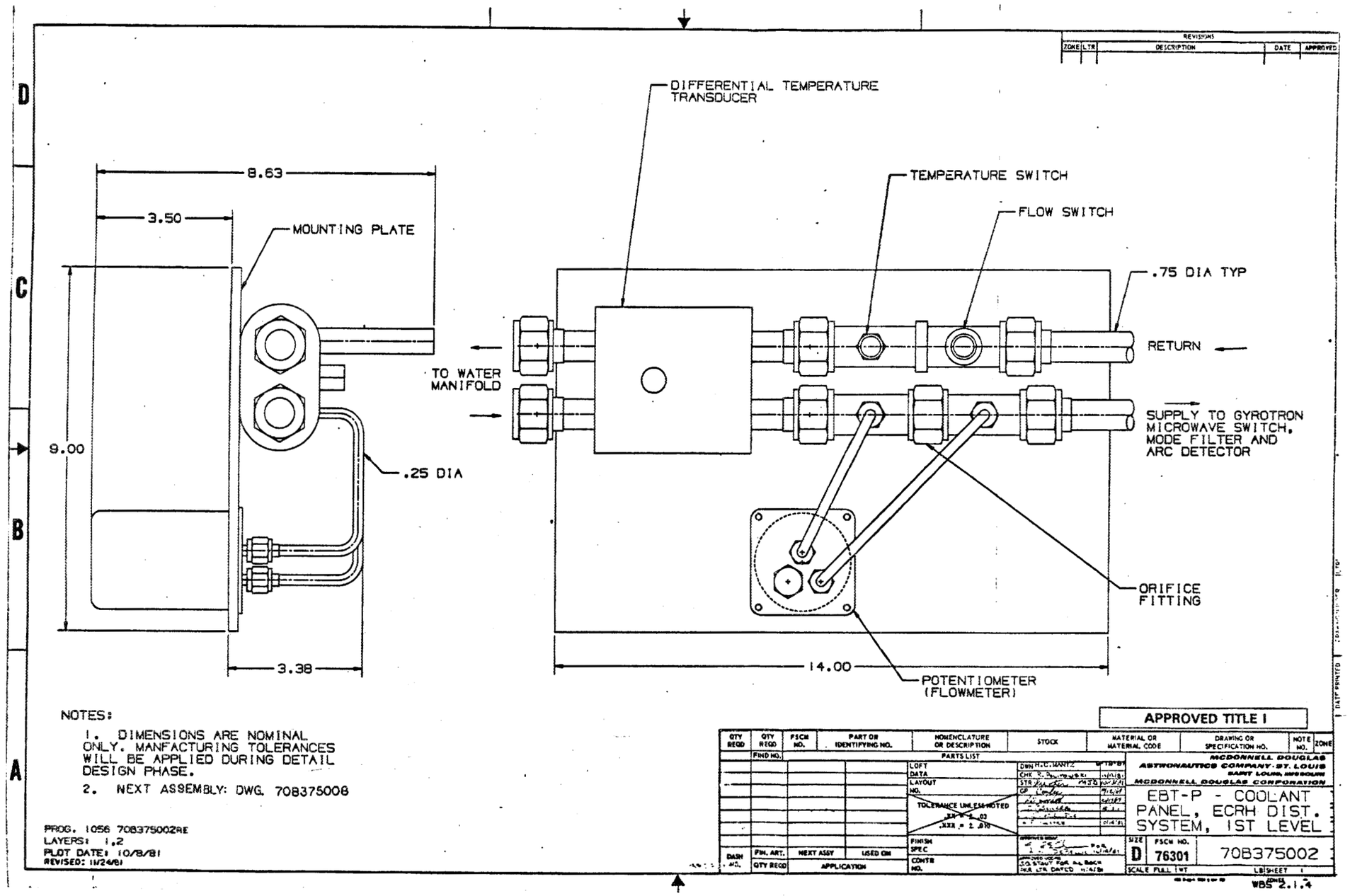
DIFFERENTIAL TEMPERATURE TRANSDUCER
TEMPERATURE SWITCH
FLOW SWITCH
.75 DIA TYP
8.63
3.50
MOUNTING PLATE
TO WATER MANIFOLD
RETURN
SUPPLY TO GYROTRON MICROWAVE SWITCH, MODE FILTER AND ARC DETECTOR
9.00
.25 DIA
ORIFICE FITTING
3.38
14.00
POTENTIOMETER (FLOWMETER)
NOTES:
1. DIMENSIONS ARE NOMINAL ONLY. MANFACTURING TOLERANCES WILL BE APPLIED DURING DETAIL DESIGN PHASE.
2. NEXT ASSEMBLY: DWG. 708375008
PROG. 1056 708375002RE
LAYERS: 1,2
PLOT DATE: 10/8/81
REVISED: 11/24/81
APPROVED TITLE I
MCDONNELL DOUGLAS ASTRONAUTICS COMPANY-ST. LOUIS
EBT-P - COOLANT PANEL, ECRH DIST. SYSTEM, 1ST LEVEL
D
76301
708375002
WBS 2.1.4