MARTIN MARIETTA ENERGY SYSTEMS LIBRARIES
3 4456 0286017 0

ornl

OAK
RIDGE
NATIONAL
LABORATORY

UNION
CARBIDE

NUREG/CR-2928
(ORNL/TM-8500)

Data Summary Report for Fission Product Release Test HI-1

M. F. Osborne
R. A. Lorenz
J. R. Travis
C. S. Webster

OAK RIDGE NATIONAL LABORATORY
CENTRAL RESEARCH LIBRARY
CIRCULATION SECTION
4500N ROOM 175
LIBRARY LOAN COPY
DO NOT TRANSFER TO ANOTHER PERSON
If you wish someone else to see this report, send in name with report and the library will arrange a loan.
UCN-7969 3 9-77

Prepared for the U.S. Nuclear Regulatory Commission
Office of Nuclear Regulatory Research
Under Interagency Agreements DOE 40-551-75 and 40-552-75

OPERATED BY
UNION CARBIDE CORPORATION
FOR THE UNITED STATES
DEPARTMENT OF ENERGY

Printed in the United States of America. Available from
National Technical Information Service
U.S. Department of Commerce
5285 Port Royal Road, Springfield, Virginia 22161

Available from
GPO Sales Program
Division of Technical Information and Document Control
U.S. Nuclear Regulatory Commission
Washington, D.C. 20555

This report was prepared as an account of work sponsored by an agency of the United States Government. Neither the United States Government nor any agency thereof, nor any of their employees, makes any warranty, express or implied, or assumes any legal liability or responsibility for the accuracy, completeness, or usefulness of any information, apparatus, product, or process disclosed, or represents that its use would not infringe privately owned rights. Reference herein to any specific commercial product, process, or service by trade name, trademark, manufacturer, or otherwise, does not necessarily constitute or imply its endorsement, recommendation, or favoring by the United States Government or any agency thereof. The views and opinions of authors expressed herein do not necessarily state or reflect those of the United States Government or any agency thereof.

NUREG/CR-2928
ORNL/TM-8500
Dist. Category R3

Chemical Technology Division

DATA SUMMARY REPORT FOR FISSION PRODUCT RELEASE TEST HI-1

M. F. Osborne
R. A. Lorenz
J. R. Travis
C. S. Webster

Manuscript Completed — November 1982
Date Published — December 1982

Notice: This document contains information of a preliminary nature. It is subject to revision or correction and therefore does not represent a final report.

Prepared for the
U.S. Nuclear Regulatory Commission
Office of Nuclear Regulatory Research
Under Interagency Agreements DOE 40-551-75 and 40-552-75

NRC FIN No. B0127

Prepared by the
OAK RIDGE NATIONAL LABORATORY
Oak Ridge, Tennessee 37830
operated by
UNION CARBIDE CORPORATION
for the
U.S. DEPARTMENT OF ENERGY
Under Contract No. W-7402-eng-26

MARTIN MARIETTA ENERGY SYSTEMS LIBRARIES

3 4456 0286017 0

ABSTRACT

This first in a series of high-temperature fission product release tests was conducted for 30 min at 1400°C, with the release taking place into flowing steam. The fuel specimen was a 20-cm-long section of H. B. Robinson fuel rod, irradiated to 28,000 MWd per metric ton (t). After the test, the Zircaloy cladding of the specimen was almost completely oxidized and was quite fragile.

The fission product collection system included a thermal gradient tube (700-150°C), filters, heated charcoal, and cooled charcoal. Gamma ray analysis of apparatus components and collectors showed that about 2.83% of the ^{85}Kr and 1.75% of the ^{137}Cs were released from the fuel. Activation analysis of leach solutions from these components indicated that 2.04% of the ^{129}I was released. Other analyses revealed small but significant releases of the radionuclides ^{125}Sb and ^{106}Ru, and of the elements Br, Rb, Sr, Zr, Ag, Sn, Te, Ba, and La. In addition, several other elements which originate as furnace materials or as impurities were collected. These preliminary results are in general agreement with release values predicted from previous studies; more complete data evaluation will be reported later.

CONTENTS

Page

ABSTRACT iii
LIST OF FIGURES vi
LIST OF TABLES vii

1. INTRODUCTION 1

2. TEST DESCRIPTION 2

2.1 Fuel Specimen Data 2
2.2 Experimental Apparatus 2
2.3 Tests Conditions and Operation 12
2.4 Posttest Disassembly and Sample Collection 12

3. TEST RESULTS 14

3.1 Test Data 14
3.2 Posttest Data 14

3.2.1 Gamma spectrometric results 18
3.2.2 Results of activation analysis for iodine 20
3.2.3 Spark source mass spectrometry (SSMS) results 26
3.2.4 Distribution of cesium in the furnace 29
3.2.5 Distribution and form of cesium along the thermal gradient tube 29
3.2.6 Examination of cladding chip 32
3.2.7 Analysis of material deposited on the Teflon filter disc 33
3.2.8 Fuel specimen examination 33

4. CONCLUSIONS 36

5. REFERENCES 37

APPENDIX: FISSION PRODUCT RELEASE TESTS — GENERAL PROCEDURE 39

LIST OF FIGURES

Figure		Page
1.	Gamma profile of fuel rod H-15, showing locations of cuts; section A-2 was used in HI-1	6
2.	Fuel specimen for fission product release studies	7
3.	Induction furnace for fission product release tests	8
4.	Fission product release and collection system	9
5.	Photograph of fission product release furnace (a), thermal gradient tube (b), and filter package (c) in steel containment box before test HI-1	10
6.	Data acquisition and processing system for fission product release test	11
7.	Two unirradiated fuel specimens illustrating the appearance before and after heating at 1700°C in steam	13
8.	Temperature and power history for test HI-1	15
9.	Flowrate and temperature history for test HI-1. Note the large increase in total flow at 10 to 30 min, the conversion of steam to noncondensible hydrogen	16
10.	Releases of ^{85}Kr and ^{137}Cs as functions of time and temperature in test HI-1	17
11.	Distribution of fission products in test HI-1	21
12.	Cesium-137 distribution in thermal gradient tube after leaching in test HI-1	22
13.	Distribution of ^{137}Cs and ^{125}Sb in thermal gradient tube after leaching in test HI-1	24
14.	Temperature distribution in thermal gradient tube in test HI-1	28
15.	Concentration of deposited cesium in furnace outlet in test HI-1	30
16.	Distribution of ^{137}Cs along platinum thermal gradient tube (before sectioning for leaching) and locations of subsequent cuts	31
17.	Sections of fuel rod prepared for metallographic examinations: (a) control specimen for rod H-15, untested, ~4.5×, and (b) specimen for test HI-1, ~4.8×, including ZrO_2 Boat	35

LIST OF TABLES

Table		Page
1.	Test HI-1 fuel specimen data	3
2.	Amounts of principal fission and activation product elements in H. B. Robinson fuel after 2627 days of decay	4
3.	Principal radionuclides and selected stable nuclides in H. B. Robinson fuel after 2627 days of decay	5
4.	Operating conditions for test HI-1	12
5.	Distribution of fission products released in test HI-1	18
6.	Distribution of cesium in test HI-1	19
7.	Distribution of antimony in test HI-1 (based on ^{125}Sb data)	23
8.	Distribution of iodine in test HI-1, as determined by neutron activation analysis	25
9.	Spark source mass spectrometry (SSMS) results (based on ^{137}Cs gamma spectrometric data)	27
10.	Analysis of oxidized cladding specimen	32
11.	Analysis of material deposited on Teflon filter disc	34

DATA SUMMARY REPORT FOR FISSION PRODUCT RELEASE TEST HI-1

M. F. Osborne
R. A. Lorenz
J. R. Travis
C. S. Webster

1. INTRODUCTION

This test was the first in a series designed to investigate fission product release from light-water reactor (LWR) fuel in steam over the temperature range 1400 to ~2400°C.[1] Earlier tests, conducted under similar conditions at temperatures of 500 to 1600°C, have been reported by Lorenz et al.[2-5] The purpose of this work, which is sponsored by the U.S. Nuclear Regulatory Commission (NRC), is to obtain the experimental data needed to reliably assess the consequences of heatup accidents in light-water reactors. The overall objectives of this program are:

1. To determine fission product release from discharged LWR fuel at temperatures up to and including fuel melting (~2400°C).

2. To identify the chemical species released in both the gaseous and the condensed phases, if possible.

3. To collect and characterize the released aerosol.

4. To correlate the results with data from related programs and to develop a consistent source-term model applicable to any LWR fuel for a spectrum of accident conditions.

5. To aid in the interpretation of integral melt tests conducted at ORNL (the LWR Aerosol Release and Transport Program) and of tests with simulated fuel only (the SASCHA Program at Karlsruhe, Germany).

Tests of fully-irradiated LWR fuel will be emphasized in this program, but the applicability of simulated fuel (unirradiated UO_2 containing a range of fission product elements) will be investigated in the higher temperature tests (>2000°C). All tests will be conducted in a flowing mixture of steam and argon at atmospheric pressure; steam concentrations will be varied to simulate different accident sequences.

Test temperatures in the existing induction furnace will be limited to a maximum of ~2000°C. Higher temperature tests will require the replacement of the currently used ZrO_2 ceramics with ThO_2; there is some doubt about the availability of suitable ThO_2 furnace components. The existing fission product collection and analysis system will be improved to provide chemical species identification when suitable instrumentation (a laser Raman spectrometer) is available.

This report is intended to provide a brief description of fission product release test HI-1 and a summary of the data obtained; thorough data evaluation and correlation will be included in a subsequent topical report covering several tests.

2. TEST DESCRIPTION

The objective of this initial test was to obtain release data which could be readily compared with data from previous tests, especially in the temperature region where a rapid increase in release has been observed (~1400°C).

2.1 Fuel Specimen Data

The test specimen was a 20.3-cm-long section from rod H-15 of bundle B05, which operated in the Carolina Power and Light Company's H. B. Robinson-2 reactor from October 1971 to May 1974.[6] Details of the irradiation, and of the characteristics of this particular specimen, are listed in Table 1; fission product inventories for the specimen are shown in Tables 2 and 3.

The specimen was cut from a section of the H-15 rod; Fig. 1 shows the location with respect to the gamma ray profile (which is an indication of the burnup profile). Tapered end caps of Zircaloy-2 were pressed onto the ends of the specimen, not as gas seals, but to prevent loss of the fractured UO_2 fuel during subsequent handling. A small hole, 1.6 mm in diameter, was drilled through the cladding at mid-length to serve as a standard leak for fission product escape during the test. These details are illustrated in Fig. 2.

2.2 Experimental Apparatus

The fuel specimen was heated in an induction furnace, illustrated in Fig. 3. This furnace was developed from designs used in previous experimental efforts: fission product release tests,[2-4] fuel rod burst experiments,[7] and molten fuel tests.[8] The existing furnace will be used in tests up to ~2000°C; with the substitution of ThO_2 for the ZrO_2 internal components, tests of molten fuel (~2400°C) should also be possible. The furnace is mounted inside a stainless steel containment box in a hot cell, as shown in Figs. 4 and 5. In test HI-1, the fission product collection system included a platinum thermal gradient tube, fiberglass filters, heated charcoal (for iodine adsorption), and cooled charcoal (for rare gas adsorption). The steam was collected in a condenser and a dryer, as shown in Fig. 4, prior to reaching the cooled charcoal. Instrumentation included thermocouples and an optical pyrometer for temperature measurement, NaI (Tℓ) radiation detectors connected to multichannel analyzers, and conventional electrical and gas flow instruments. A data acquisition system (Fig. 6) was used to record test data at 1-min intervals and several individual chart recorders maintained continuous records of temperatures and flow rates.

Table 1. Test HI-1 fuel specimen data

Fuel rod identification	Rod H-15, bundle B05, H. B. Robinson 2 (PWR)
Irradiation data:	
Period	October 1971 to May 1974
Maximum linear heat rating, peak (December 1971)	32.6 kW/m (9.95 kW/ft)
Rod average	23.3 kW/m (7.10 kW/ft)
End linear heat rating, peak (May 1974)	21.2 kW/m (6.45 kW/ft)
Rod average	17.5 kW/m (5.34 kW/ft)
Rod fuel loading	2495.4 g UO_2 (2199.6 g U)
Burnup, rod peak	31,000 MWd/t
Burnup, test specimen	28,000 MWd/t
Specimen data:	
Length	20.3 cm (8.0 in.)
Location	35.6 to 55.9 cm from bottom end of rod
Cladding OD	1.072 cm (0.422 in.)
Specimen fuel loading	137.3 g UO_2 (121.0 g U)
Gas release during irradiation	0.35% of Kr; 0.25% of Xe
Total weight of specimen	168 g
Weight of Zircaloy cladding and end caps	30.7 g

Table 2. Amounts of principal fission and activation product elements in H. B. Robinson fuel after 2627 days of decay[a]

Element	Amount per metric ton of initial uranium (g)	Amount in HI-1 specimen[b] (mg)
Se	47.15	5.705
Br	18.24	2.207
Kr	296.2	35.84
Rb	286.6	34.68
Sr	653.7	79.10
Y	372.2	45.04
Zr[c]	2981	360.7
Mo	2821	341.3
Tc	661.7	80.07
Ru	1885	228.1
Rh	420.8	50.92
Pd	1241	150.2
Ag	72.21	8.737
Cd	98.28	11.89
In	2.42	0.293
Sn[c]	81.85	9.904
Sb	18.96	2.294
Te	420.8	50.92
I	208.1	25.18
Xe	4548	550.3
Cs	2087	252.5
Ba	1389	168.1
La	1027	124.3
Ce	2009	243.1
Pr	942.8	114.1
Nd	3389	410.1
Pm	19.60	2.372
Sm	703.9	85.17
Eu	117.3	14.19
Gd	93.94	11.37
Total of all fission products	28,920	3499
U	9.617×10^5	1.164×10^5
^{235}U	6.857×10^3	8.297×10^2
Pu	8.575×10^3	1.038×10^3

[a]Calculated by C. W. Alexander on May 24, 1982, using the ORIGEN computer program, with a burnup of 28,058 MWd/t and a 2627-d decay to July 15, 1981.

[b]Original uranium content of 20.3-cm fuel specimen was 121.0 g; initial enrichment was 2.651% ^{235}U. Thus, the fuel specimen was 121.0 g/10^6 g = 0.0121% of a metric ton (t).

[c]Calculated amounts in the Zircaloy cladding are: 2.086×10^5 g Zr and 3.13×10^3 g Sn per metric ton of initial uranium.

Table 3. Principal radionuclides and selected stable nuclides in H. B. Robinson fuel after 2627 days of decay[a]

Nuclide	Amount of initial uranium		Amount in HI-1 specimen[b]	
	(g/t)	(Ci/t)	(mg)	(mCi)
^{83}Kr	34.66	0.0	4.194	0.0
^{84}Kr	92.97	0.0	11.25	0.0
^{85}Kr	12.37	4857	1.497	587.7
^{86}Kr	155.4	0.0	18.80	0.0
^{90}Sr	367.7	50,180	44.49	6072
^{93}Zr[c]	597.2	1.501	72.26	0.182
^{99}Tc	661.7	11.22	80.07	1.358
^{106}Ru	1.077	3607	0.130	436.4
^{110m}Ag	5.3×10^{-4}	2.520	6.4×10^{-5}	0.305
^{113m}Cd	0.168	36.43	0.020	4.408
^{125}Sb[c]	2.134	2204	0.258	266.7
^{129}I	157.6	0.0278	19.07	0.003
^{128}Xe	2.470	0.0	0.299	0.0
^{130}Xe	9.915	0.0	1.200	0.0
^{131}Xe	377.2	0.0	45.64	0.0
^{132}Xe	912.5	0.0	110.4	0.0
^{134}Xe	1244	0.0	150.5	0.0
^{136}Xe	2002	0.0	242.2	0.0
^{134}Cs	8.372	10,840	1.013	1268
^{137}Cs	860.9	74,920	104.2	9065
^{144}Ce	0.512	1634	0.062	197.7
^{147}Pm	19.59	18,170	2.370	2199
^{151}Sm	11.33	298.2	1.371	36.08
^{154}Eu	18.23	4923	2.206	595.7
Total	28,920	300,900	3499	36,410

[a]Calculated by C. W. Alexander on May 24, 1982, using ORIGEN computer program, with a burnup of 28,058 MWd/t and a 2627-d decay to July 15, 1981.

[b]Original uranium content of 20.3-cm fuel specimen was 121.0 g; initial enrichment was 2.651% ^{235}U. Thus, the fuel specimen was 121.0 g/ 10^6 g = 0.0121% of a metric ton.

[c]Fission products only; significant quantities of these and other nuclides (^{119}Sn, ^{123}Sn, ^{60}Co, etc.) are produced by neutron activation of the Zircaloy cladding.

ORNL DWG 77-60R3

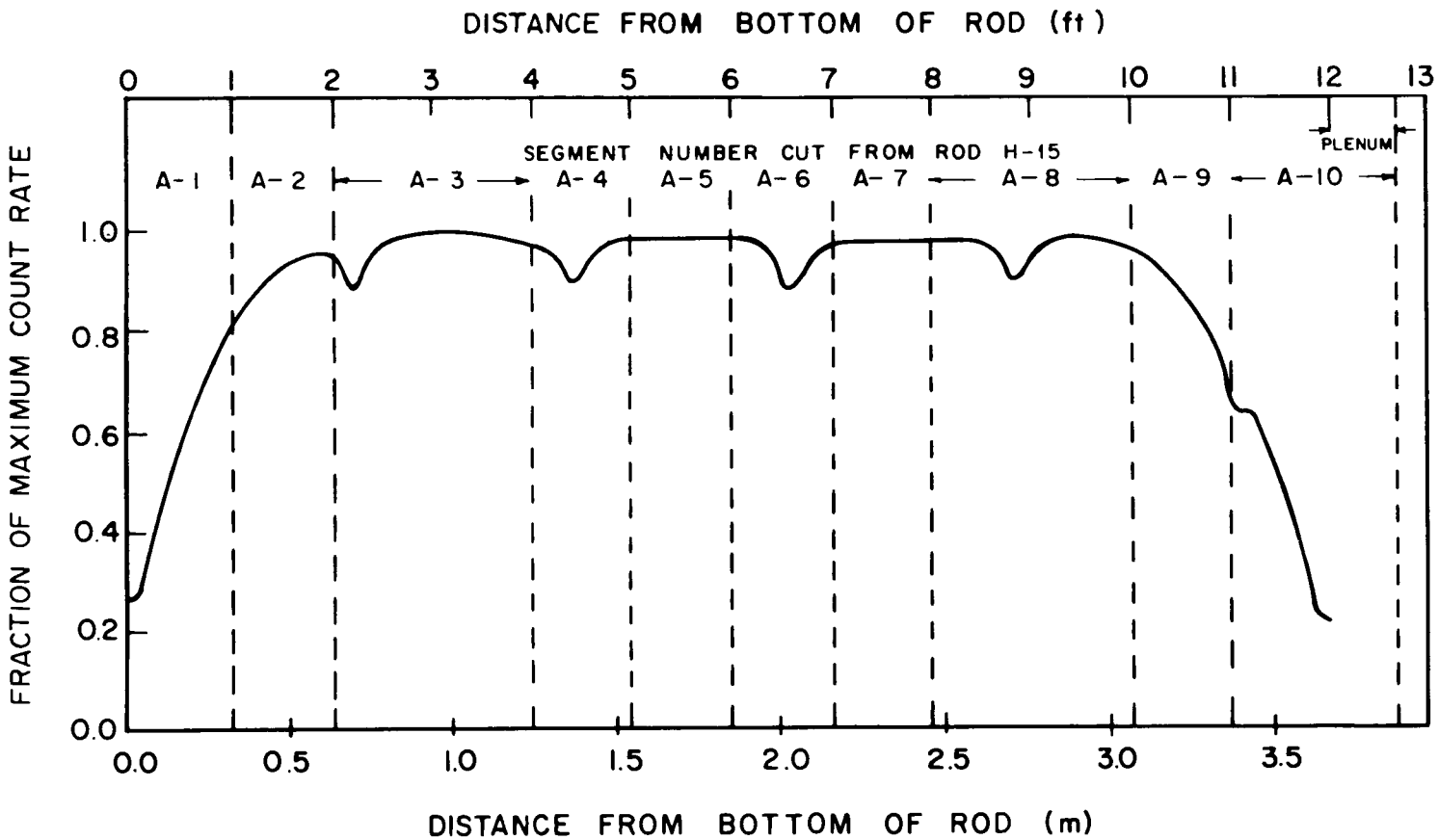

Fig. 1. Gamma profile of fuel rod H-15, showing locations of cuts; section A-2 was used in HI-1.

ORNL DWG 82-1049

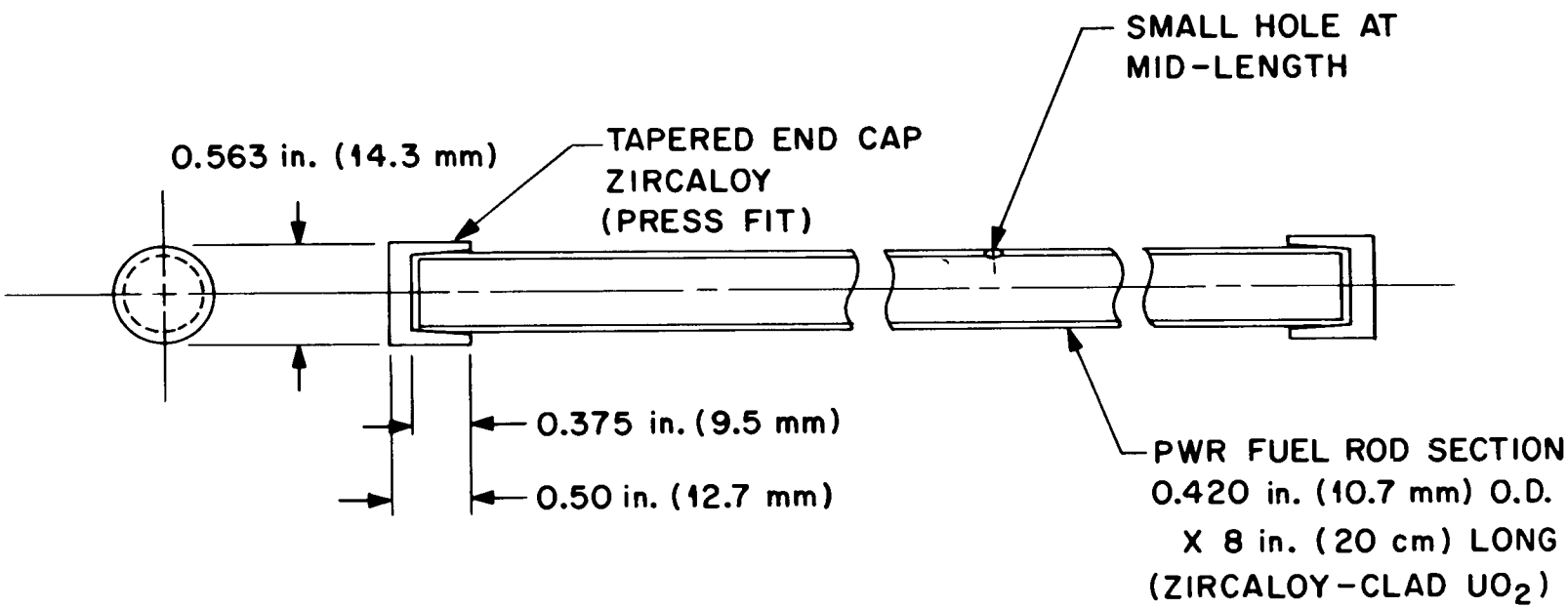

Fig. 2. Fuel specimen for fission product release studies.

ORNL-DWG 81-15401R

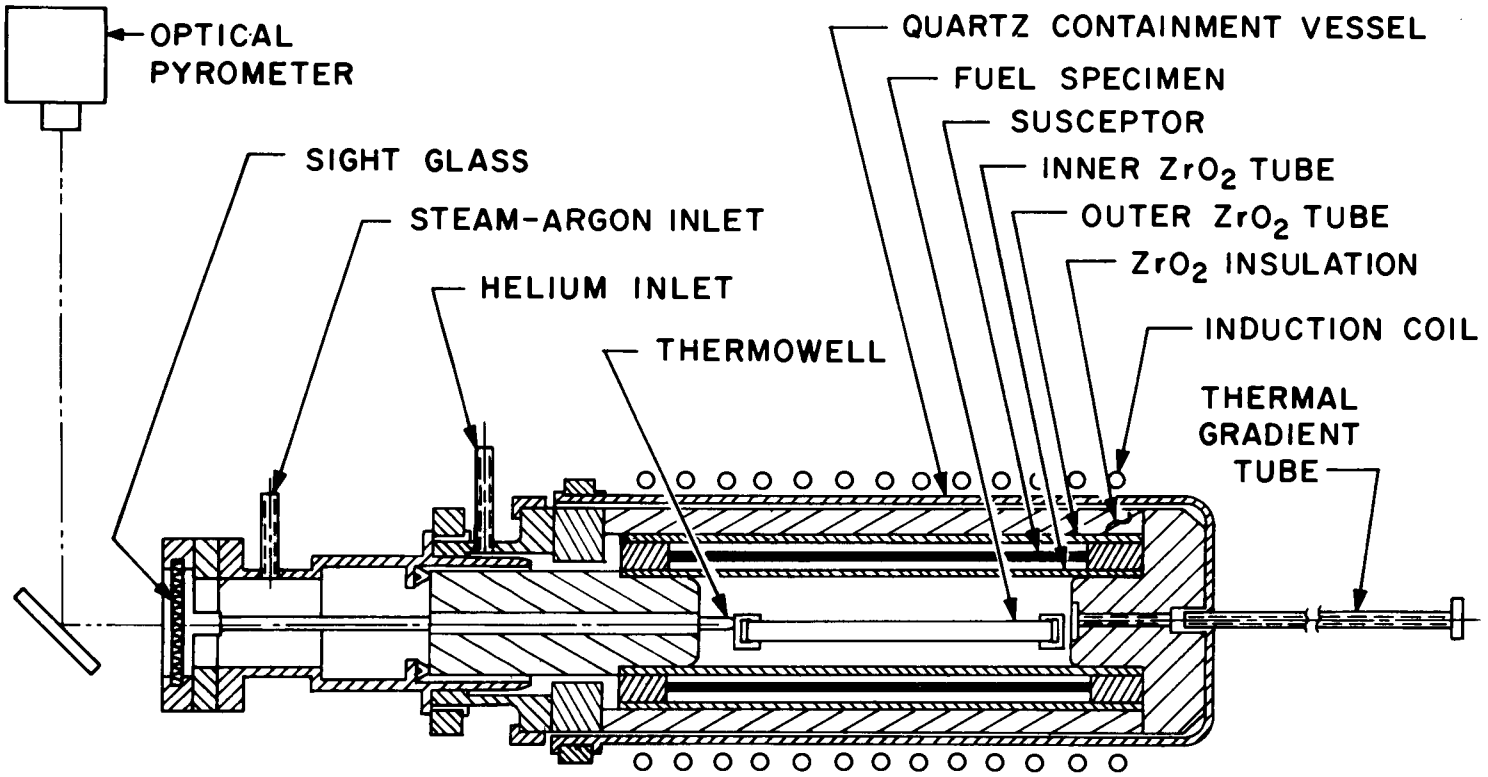

Fig. 3. Induction furnace for fission product release tests.

ORNL DWG 82-279

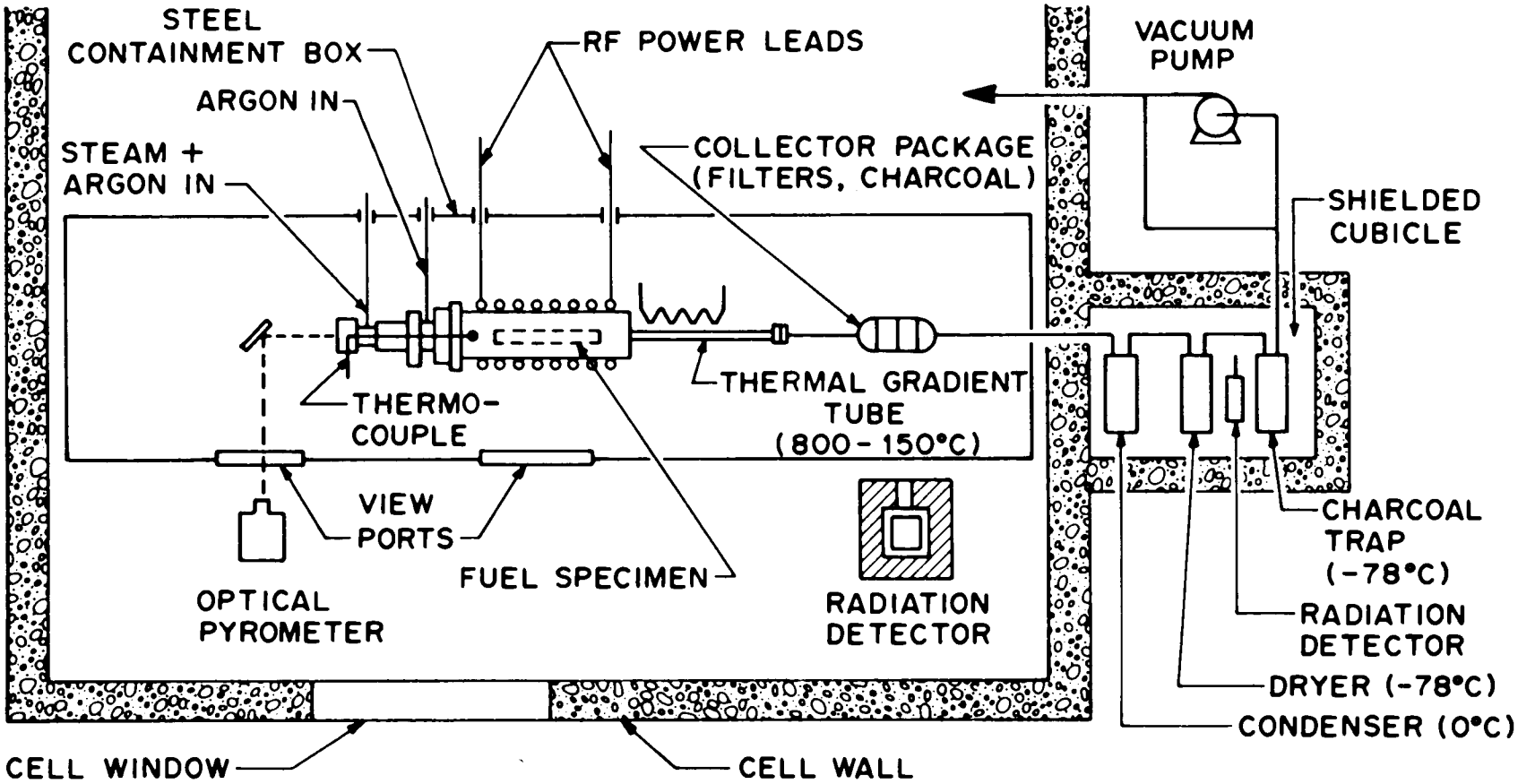

Fig. 4. Fission product release and collection system.

ORNL PHOTO 0880-82

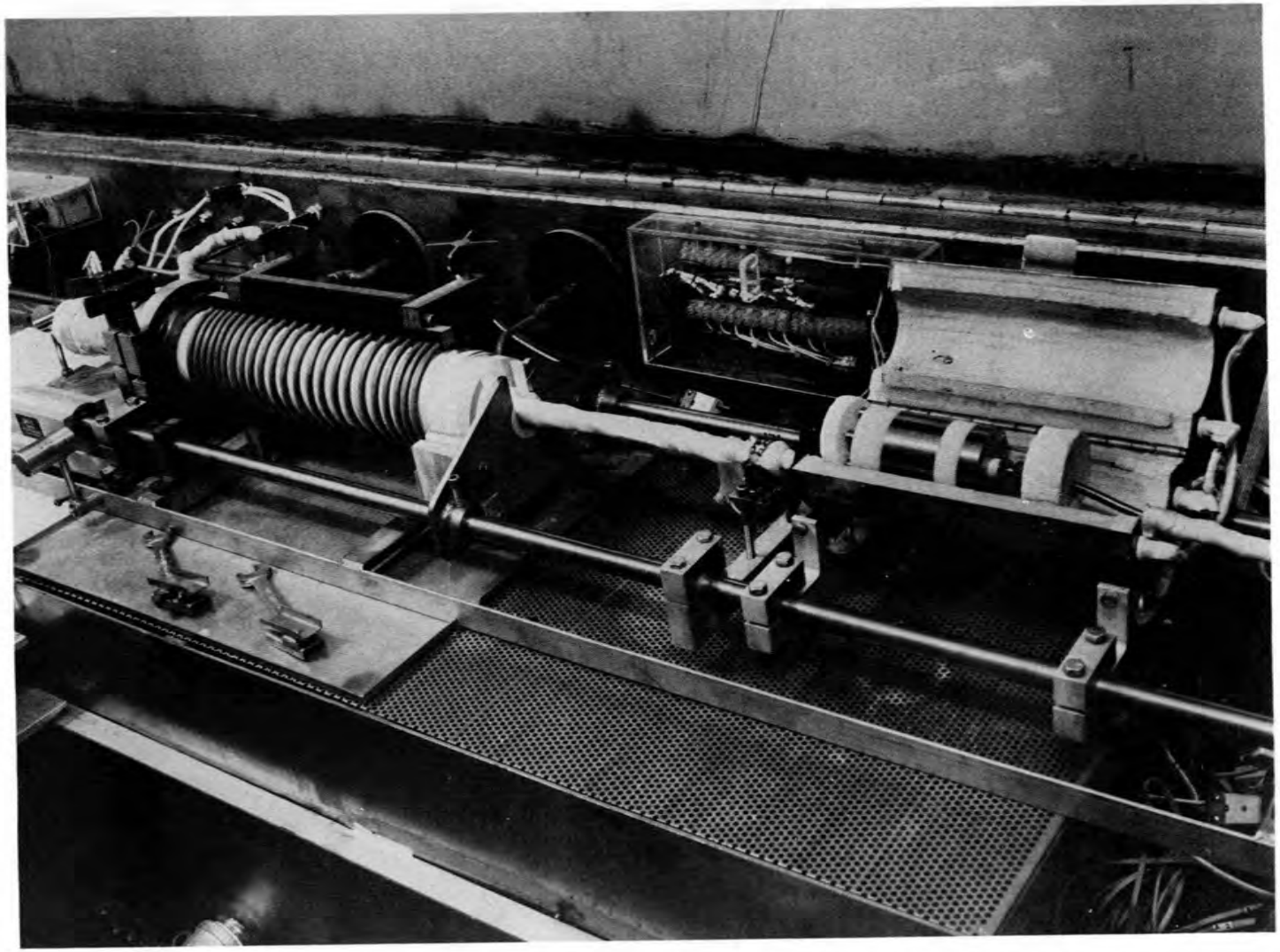

Fig. 5. Photograph of fission product release furnace (a), thermal gradient tube (b), and filter package (c) in steel containment box before test HI-1.

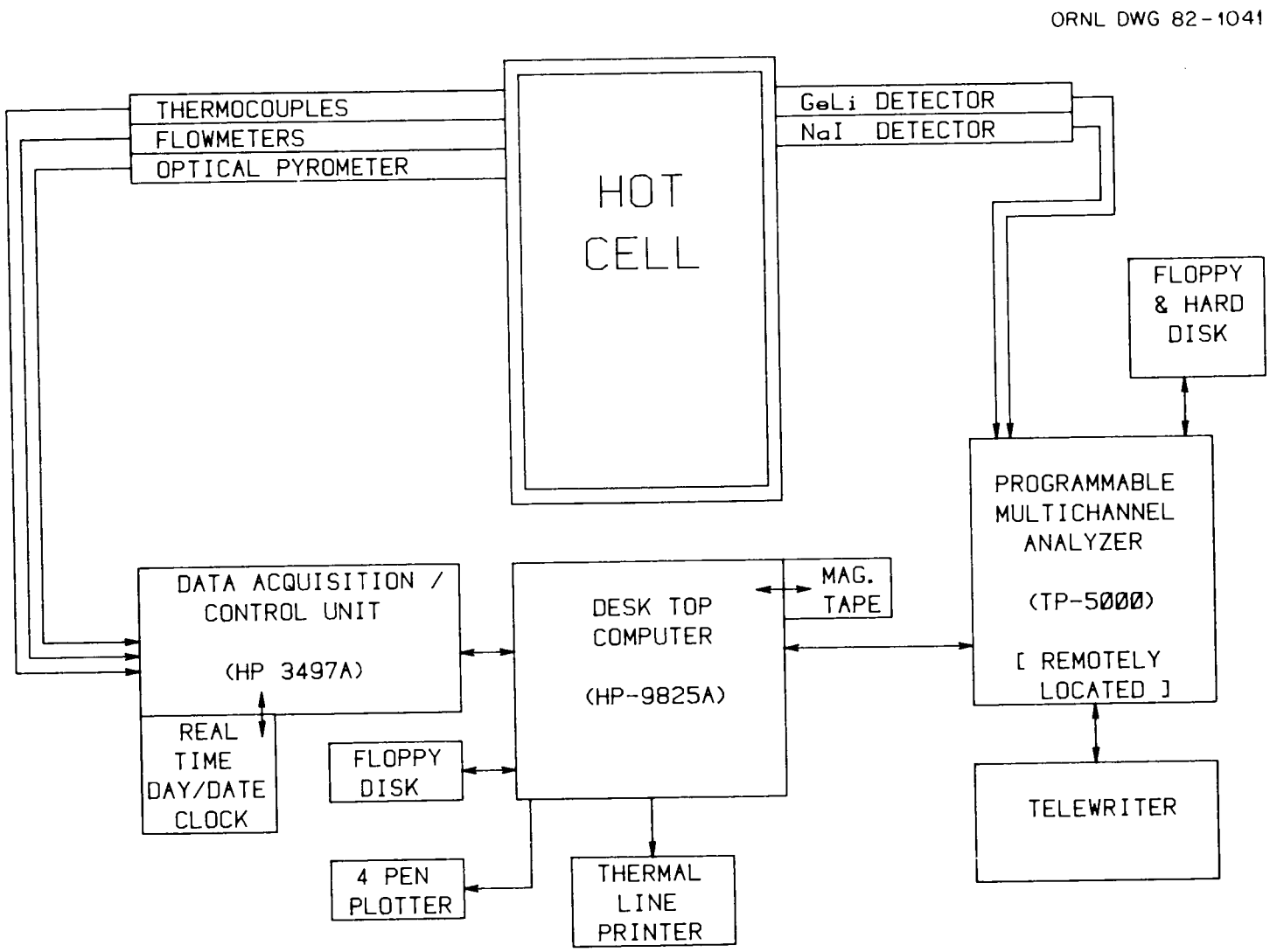

Fig. 6. Data acquisition and processing system for fission product release test.

2.3 Test Conditions and Operation

The conditions of the test are listed in Table 4, and a general operating procedure for this and subsequent tests is given in Appendix A.

Table 4. Operating conditions for test HI-1

Initial specimen temperature	220°C
Heatup rate	72°C/min
Test temperature	1400°C
Time at test temperature	30 min
Nominal flowrate data:[a]	
Ar purge to W susceptor	0.20 L/min
Ar to steam generator	0.30 L/min
Steam into system	1.0 L/min
Volume flow data:[b]	
Ar purge	13.13 L
Ar to steam generator	20.02 L
H_2 generated	12.17 L

[a]As meaured by mass flow meters.

[b]As measured by totalizers on mass flow meters during the 76 min of steam flow into apparatus.

The experimental apparatus was prepared by direct handling; transfer and loading of the fuel specimen and final closure of the furnace and containment box required the use of master slave manipulators. Conduct of the test required no in-cell operations.

2.4 Posttest Disassembly and Sample Collection

Following the high-temperature test and complete cooldown, the test apparatus was disassembled remotely. The filter package and thermal gradient tube liner were removed first, to assure no contamination from fuel handling. The fuel specimen was removed from the furnace, inspected visually, and cast in epoxy resin to maintain its physical stability during handling. Thorough oxidation of the Zircaloy cladding during the test left it extremely fragile. The unirradiated specimen shown in Fig. 7 was heated under similar conditions and was similar in appearance. (Note the usual 10% increase in length and diameter.) After removal of the fuel specimen from the hot cell, personnel entry for decontamination of the fuel handling area was possible, and complete disassembly of the furnace and packaging of the components for gamma ray analysis were carried out.

ORNL PHOTO 0878-82

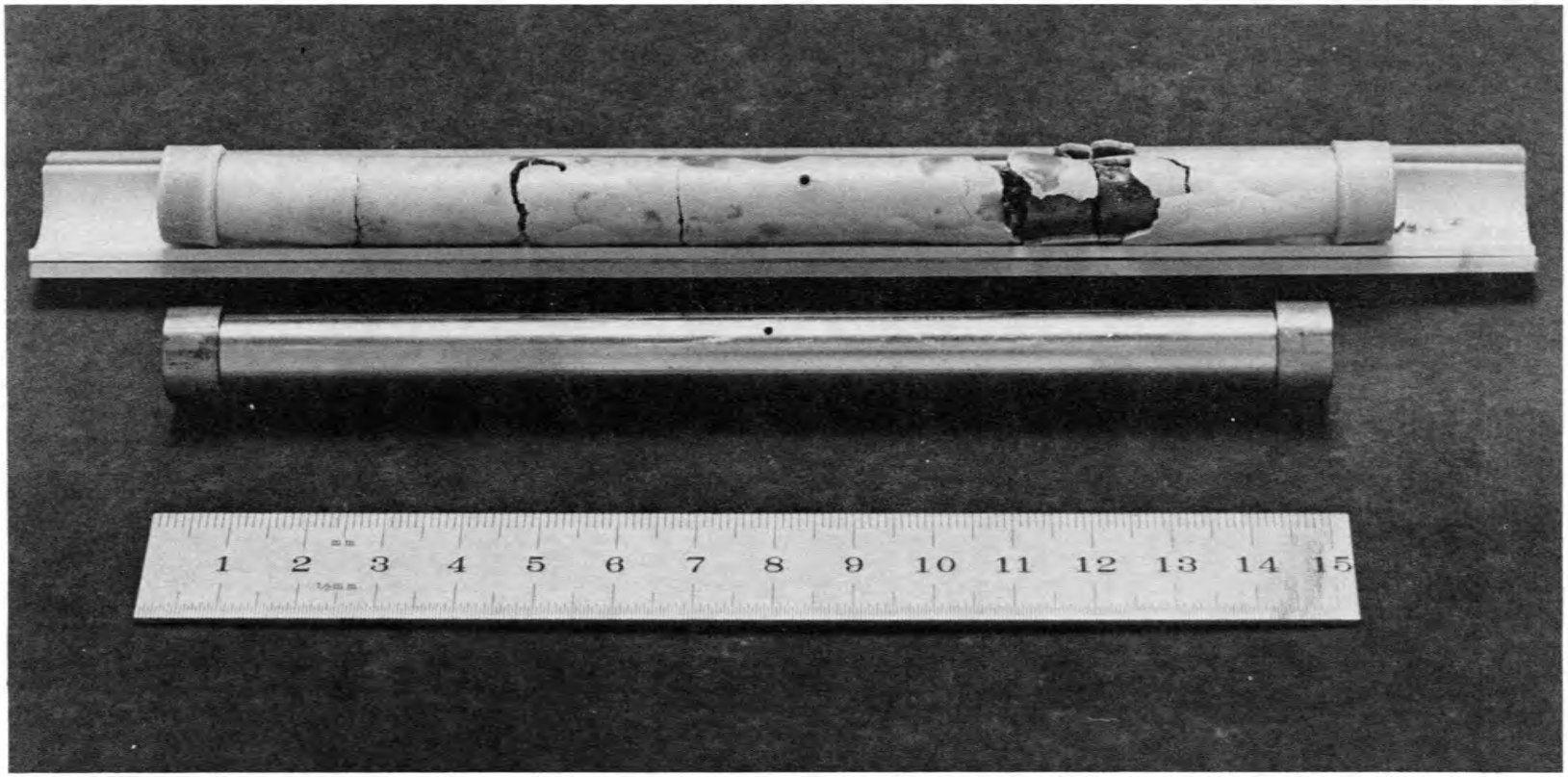

Fig. 7. Two unirradiated fuel specimens illustrating the appearance before and after heating at 1700°C in steam.

The platinum thermal gradient tube liner was gamma-scanned at 1.3-cm intervals to determine the radioactivity profile (primarily ^{137}Cs). With the use of tongs and shadow shielding, the thermal gradient tube was cut into 3.2-cm lengths in a laboratory hood. The platinum tube sections were opened, and samples of the deposited material were collected directly onto the small graphite electrodes used in spark-source mass spectrometry (SSMS). Each thermal gradient tube section and each component from the filter package was placed in a glass bottle for individual gamma analysis and for subsequent leaching in both basic ($NH_4OH + H_2O_2$) and acidic ($HNO_3 + HF$) solutions. Aliquots of these solutions and the SSMS electrodes were transmitted to Analytical Chemistry Division to be analyzed for specific components.

3. TEST RESULTS

3.1 Test Data

After the furnace and fuel specimen were preheated slowly to about 300°C in flowing argon, steam flow through the system began and the necessary temperature adjustments were made. When conditions were stable, the heatup phase of the test was started. The power and temperature history are illustrated in Fig. 8. On the basis of previous experience, the fuel specimen temperature should have been 50 to 100°C above that indicated by the thermocouple (located at the furnace entrance) and 100 to 150°C above that indicated by the optical pyrometer.

Operating conditions for the test are summarized in Table 4, and flow rates during the test also are shown in Fig. 9. Since the fuel specimen contained about 30.7 g Zircaloy, and since 2 moles of steam per mole of zirconium are required for the reaction

$$Zr + 2H_2O \rightarrow ZrO_2 + 2H_2\uparrow ,$$

we can calculate that the Zircaloy cladding and end caps were 80.6% oxidized to ZrO_2. (In actuality, this 80.6% included regions of ZrO_2 and regions of oxygen-stabilized alpha zirconium, with little or no pure metal remaining.)

The release histories of ^{85}Kr (to the cold charcoal traps) and ^{137}Cs (to the thermal gradient tube), as indicated by the NaI detectors are shown as functions of time and temperature in Fig. 10. Because of the high background activity at the in-cell detector that was observing the thermal gradient tube, the initial release of ^{137}Cs was not apparent. However, for the major part of the release period, the curves exhibit similar shapes.

3.2 Posttest Data

Following disassembly of the test apparatus, gamma ray spectrometric analysis of each component was conducted, thereby providing data on total

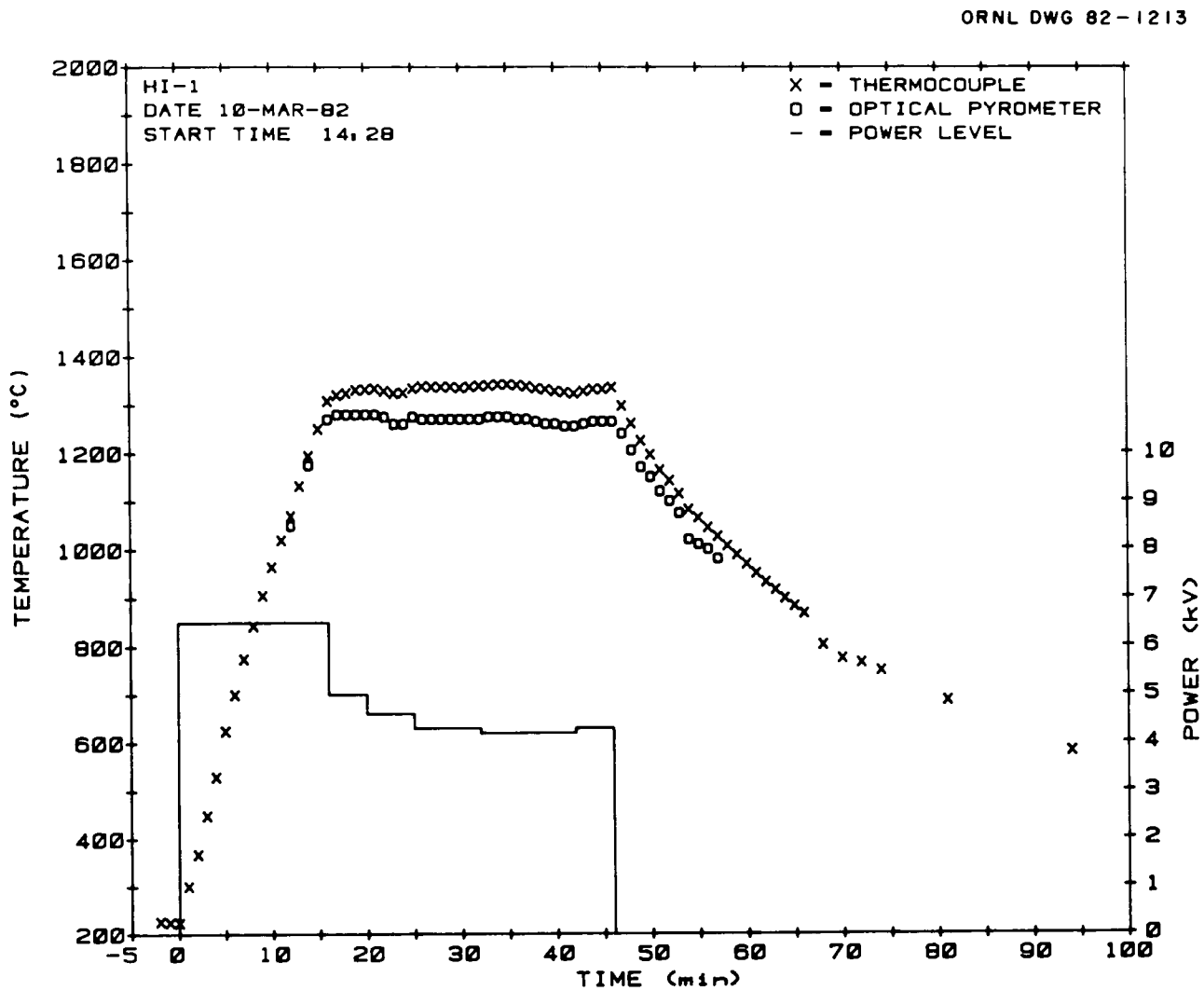

Fig. 8. Temperature and power history for test HI-1.

ORNL DWG 82-1212

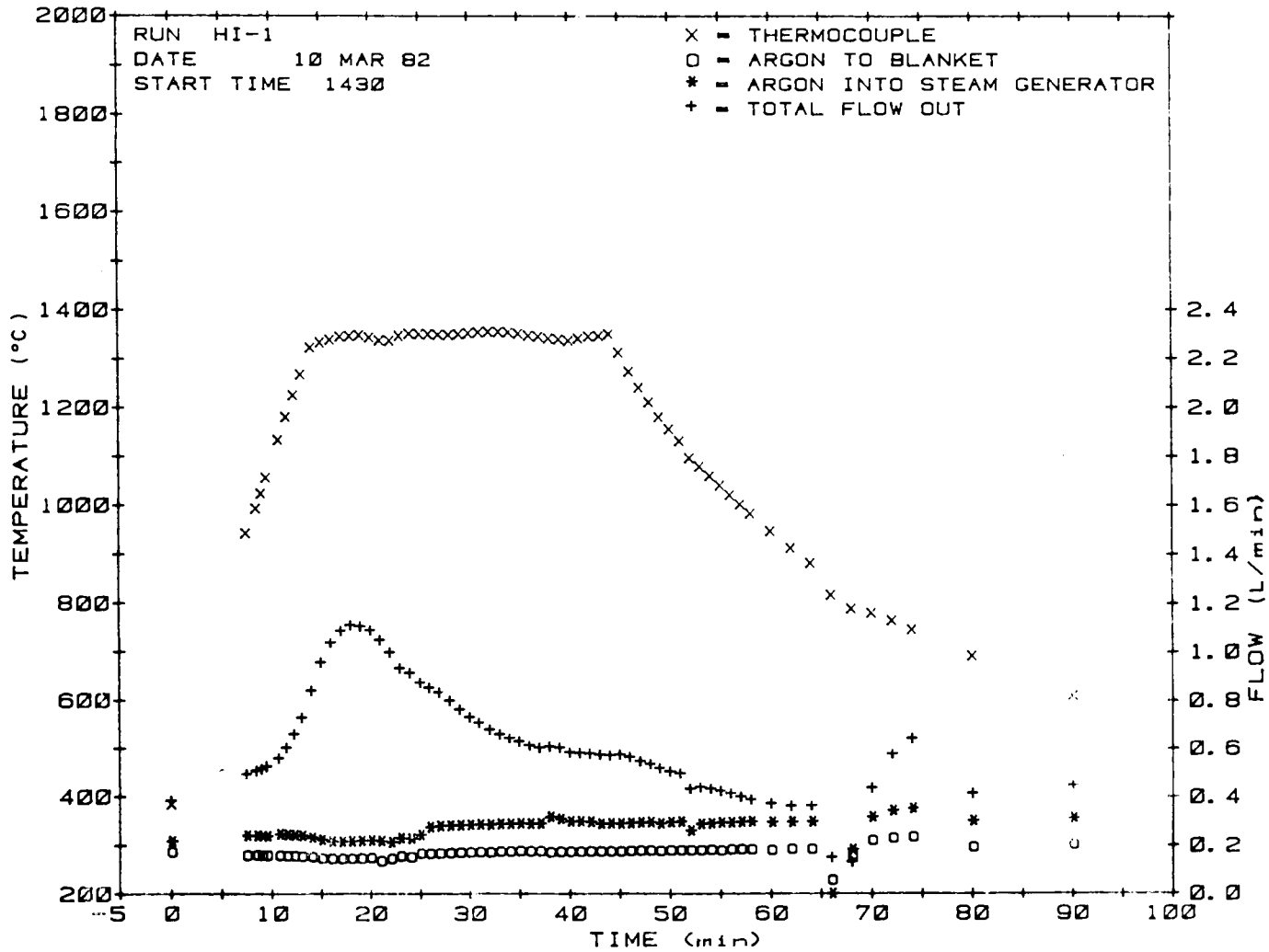

Fig. 9. Flowrate and temperature history for test HI-1. Note the large increase in total flow at 10 to 30 min, the conversion of steam to noncondensible hydrogen.

ORNL-DWG 82-1317

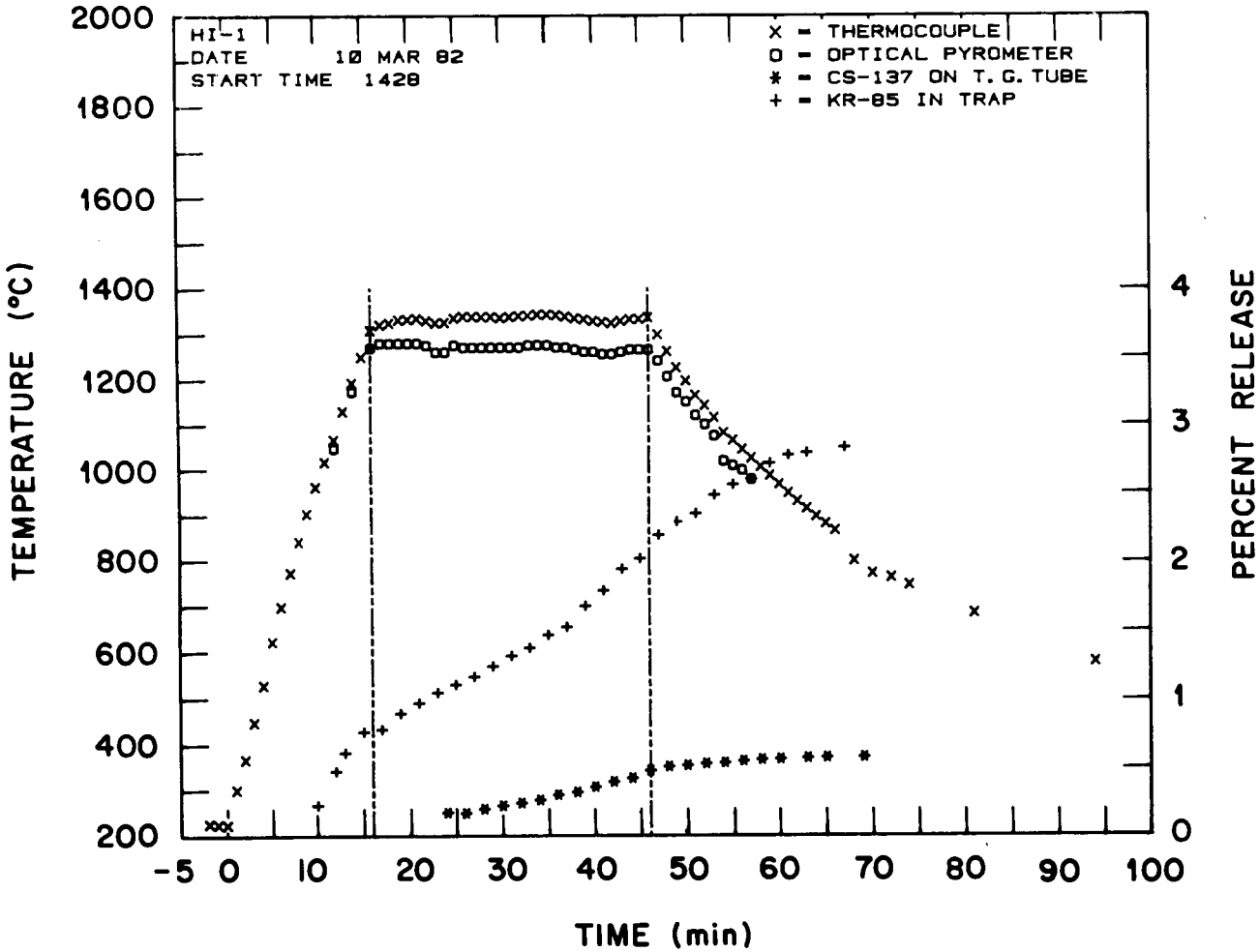

Fig. 10. Releases of ^{85}Kr and ^{137}Cs as functions of time and temperature in test HI-1.

cesium release and some data for other, less volatile and/or less radioactive, fission product elements at a few locations. (As noted previously, ^{137}Cs and ^{134}Cs comprised most of the gamma activity in the fuel.) Sampling and more specific analyses were conducted after completion of this general counting. The fractional release values for various test components are summarized in Table 5.

Table 5. Distribution of fission products released in test HI-1

Fuel specimen: 20 cm (160 g), H. B. Robinson
Test conditions: 30 min at 1400°C in steam

Test component or collector	Principal material	Temperature range (°C)	Fraction of fuel inventory found (%)			
			Kr	I	Cs	Sb
Furnace[a]	ZrO_2	1400–1000	0	0.016	0.79	1.1×10^{-4}
Thermal gradient tube	Platinum	900–135	0	0.83	0.58	0.017[b]
Filters	Fiberglass	120	0	1.18	0.38	0[c]
Hot charcoal	Charcoal	120	0	0.010	0	0
Cold charcoal	Charcoal	-78	2.83	0	$\sim 1 \times 10^{-8}$	0
Totals			2.83	2.04	1.75	>0.017

[a]In addition, particles of fuel and/or cladding recovered from the furnace contained significant amounts of ^{137}Cs, ^{125}Sb, ^{106}Ru, and ^{60}Co.

[b]Measured only after >90% of the cesium activity had been removed by leaching; the amount of Sb removed by leaching was not determined, but was indicated to be small.

[c]Not detected because of high cesium activity; possibly as high as 0.08%.

3.2.1 Gamma spectrometric results

As expected, cesium was the fission product element found to be ubiquitous in the test apparatus. The quantities were determined by counting the primary gamma rays for ^{137}Cs and ^{134}Cs, then calculating the mass of the element from these data, as shown in Table 6. (Cesium-134 is not a

Table 6. Distribution of cesium in test HI-1

Location	Temperature (°C)	Cesium found in each location: Mass (μg)	Percentage of total inventory[a]	Percentage of released
Furnace components				
Inlet end components	1000	0.2		
Tungsten susceptor	1400	3.0		
ZrO_2 furnace tube	1400	103.2		
ZrO_2 lower boat	1400	39.5		
First ZrO_2 outlet insulator	~1200	1633.5		
Second ZrO_2 outlet insulator	~1000	214.0		
Miscellaneous		0.5		
Furnace components total		1993.7	0.7896	45.21
Thermal gradient tube				
Quartz furnace container at inlet of thermal gradient tube	~900[b]	208.9		
Segment 1	800-755[b]	256.9		
Segment 2	755-730[b]	115.6		
Segment 3	730-655	196.2		
Segment 4	655-555	139.9		
Segment 5	555-400	268.4		
Segment 6	400-295	134.5		
Segment 7	295-230	55.1		
Segment 8	230-190	32.4		
Segment 9	190-155	28.5		
Segment 10	155-135	13.9		
Quartz tube (end)[c]	760-135	4.0		
Wipes from push rod		1.3		
Thermal gradient tube total		1455.9	0.5766	33.02
Filter pack				
Entrance tube	120	66.9		
Teflon entrance cone	120	6.90		
Glass wool prefilter	120	835.9		
Teflon membrane insert	120	0.68		
First HEPA filter[d]	120	48.5		
Second HEPA filter[d]	120	1.19		
Charcoal[d]	120	0.07		
Filter pack total		960.1	0.3802	21.77
Out of hot cell				
Condenser	0	7.1×10^{-3}		
Freeze trap	-78	3.0×10^{-3}		
First large charcoal	-78	1.5×10^{-4}		
Second large charcoal	-78	$<1.0 \times 10^{-4}$		
Out-of-cell total		0.010	4.1×10^{-6}	2.4×10^{-4}
Total		4409.7[e]	1.746[e]	100.0

[a]Based on an average burnup of 28,058 MWd/t, the test fuel rod segment contained 1.161×10^5 μg ^{137}Cs and 2.525×10^5 μg total cesium decay corrected to July 15, 1981. From ORIGEN calculation made May 24, 1982.

[b]These temperatures were ~100°C lower at the start of the 30-min test.

[c]This piece of quartz enclosed the platinum liner. It broke off ~2.5 cm from the entrance to the thermal gradient tube.

[d]Loose seating of the HEPA filter papers reduced their efficiency.

[e]Additional cesium was released as fuel fines.

direct fission product, but results from the neutron activation of ^{133}Cs, the stable nuclide at the end of the mass-133 decay chain.) The fraction of the total cesium inventory released from the fuel (1.75%) and the fractions found on the various apparatus components are shown in Table 5 also.

The distribution of cesium throughout the test apparatus is illustrated in Fig. 11; the distribution of iodine, based on the results of activation analysis for ^{129}I, is shown for comparison. As indicated in this figure, the concentration of cesium exceeded that of iodine at all locations except in the charcoals; the Cs:I ratio ranged from >1000 at a point within the furnace to 2.05 on the second HEPA filter, then dropped to 0.028 in the hot charcoal within the filter package.

Leaching of test components with a basic solution for iodine removal resulted in dissolution of large fractions of the cesium. This behavior is illustrated in Fig. 12, which shows the distribution of cesium along the platinum thermal gradient tube under three conditions: initially, after the basic leach, and after the acid leach. As may be seen, each leaching operation reduced the ^{137}Cs level by about one order of magnitude. The lower Cs activity after the basic leach permitted an unexpected discovery; a low but significant concentration of ^{125}Sb was measured along the thermal gradient tube. The amounts of antimony found throughout the apparatus are shown in Table 7. Moreover, although the acid leaching removed ~90% of the remaining ^{137}Cs, it had little effect on the ^{125}Sb over the hotter part of the thermal gradient tube, suggesting that reaction or alloying of the antimony with the platinum had occurred. This effect is illustrated in Fig. 13. Because ^{125}Sb is both a fission product in the fuel (Table 3) and an activation product in the cladding, the origin of that found in the test apparatus is uncertain. However, a comparison of the fission product inventories (Tables 2 and 3) with the calculated amounts of antimony and ^{125}Sb in the cladding (based on ORIGEN calculations by Croff and Alexander[9]) indicates that the fuel/cladding ratios were 10.2 for total antimony and 8.49 for ^{125}Sb. Thus, this small amount of antimony (about 1.3 μg released), compared to 2.294 mg of fission product and 98.0 μg of cladding activation product, was a small fraction of the total regardless of origin.

3.2.2 Results of activation analysis for iodine

Since iodine has no long-lived, gamma-emitting nuclides, analytical methods other than gamma spectrometry must be used. Neutron activation of ^{129}I to ^{130}I, which can be counted easily, is a proven, sensitive technique. Iodine forms dissolve readily in basic solutions to form stable iodides; in our samples, large amounts of highly radioactive cesium were dissolved also. Small aliquots of the solutions were chemically treated to remove cesium, then irradiated, and the 12.4-h ^{130}I was counted. The results of these analyses, along with the data on fractional iodine release and the cesium/iodine ratios at various apparatus locations, are summarized in Table 8. The total fraction of iodine released, 2.04%, is actually a minimum value; since the iodine cannot be detected directly, and since it is not possible to leach and sample all surfaces of the test

ORNL DWG 82-1050R

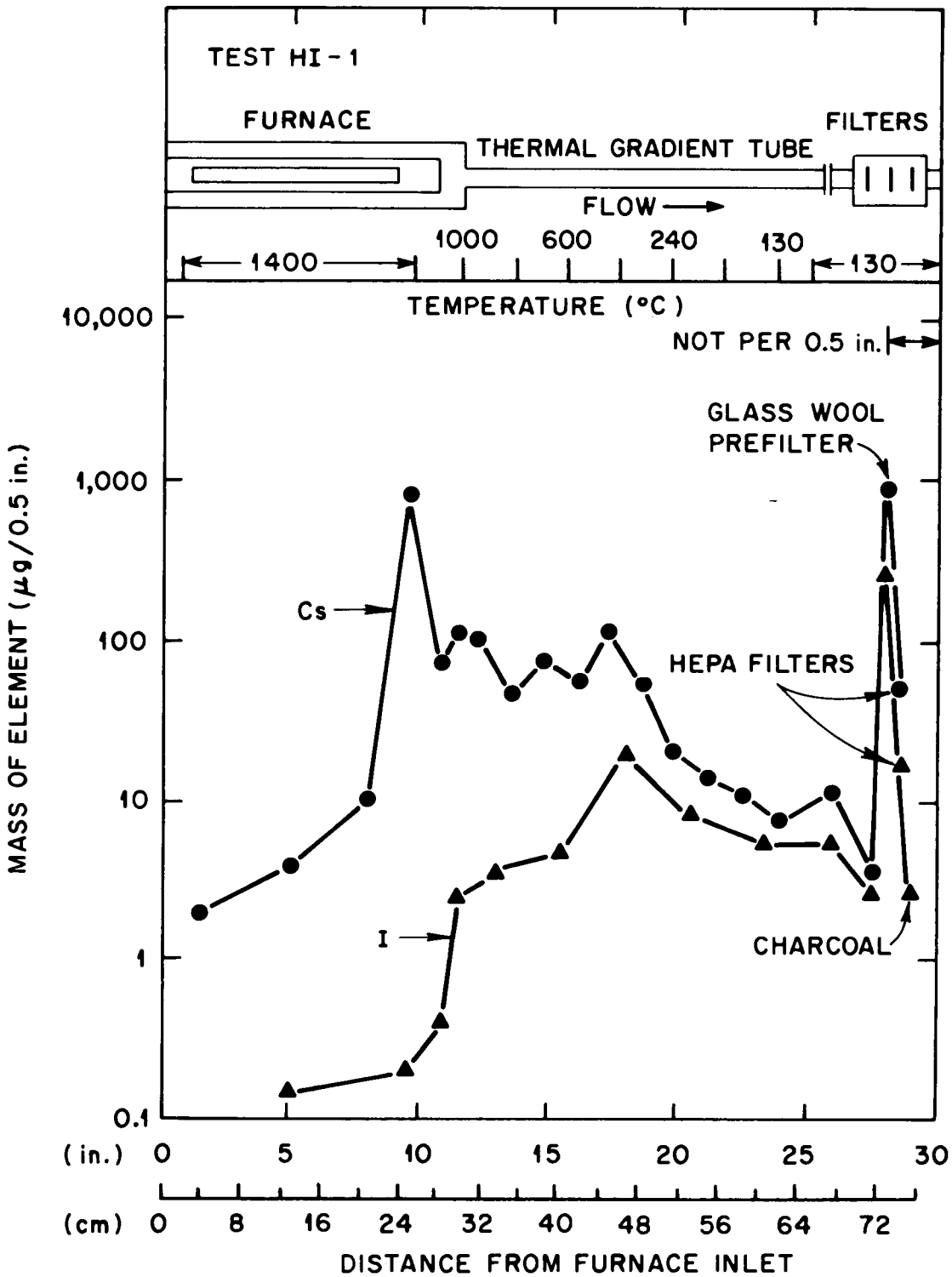

Fig. 11. Distribution of fission products in test HI-1.

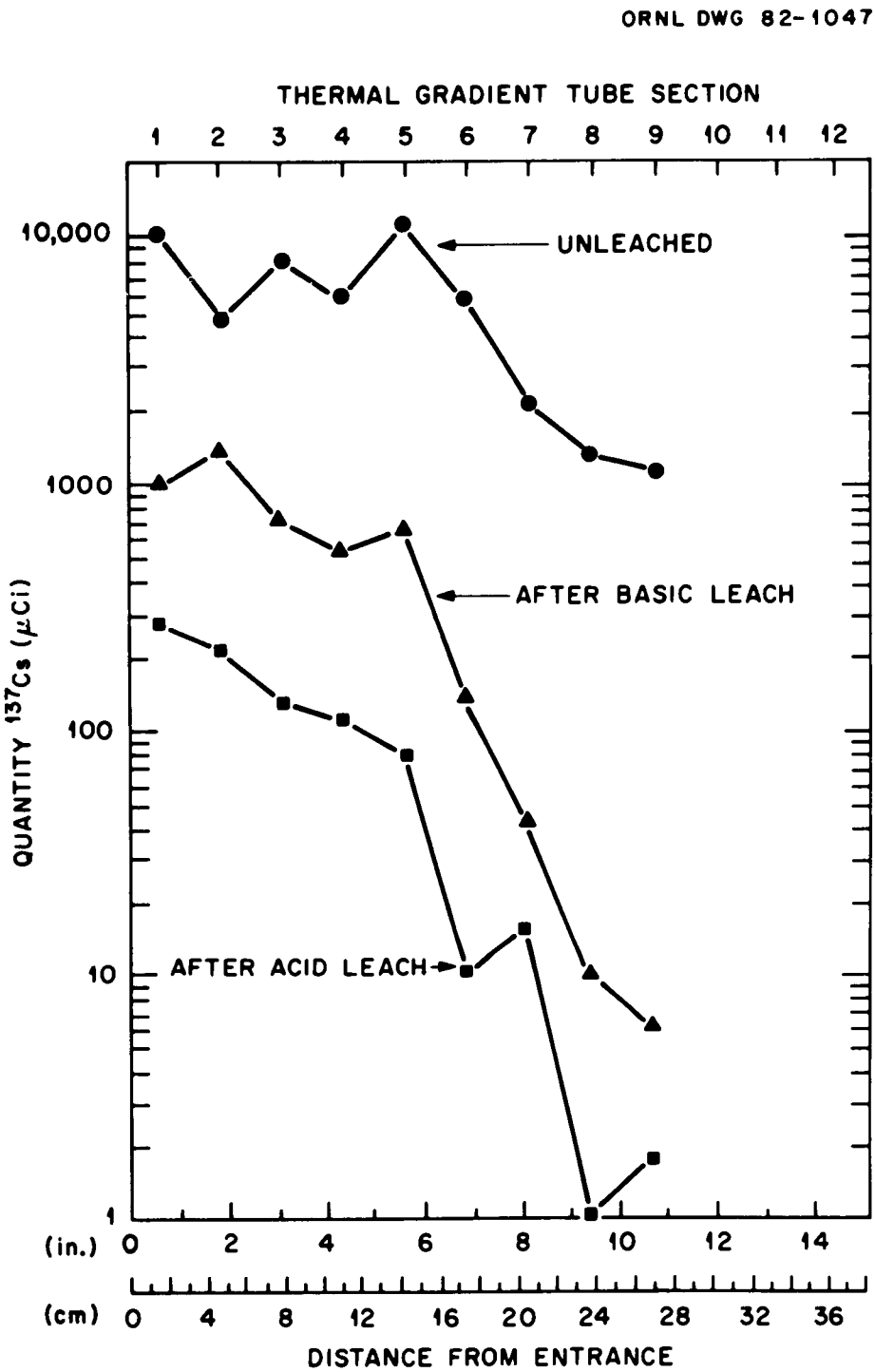

Fig 12. Cesium-137 distribution in thermal gradient tube after leaching in test HI-1.

Table 7. Distribution of antimony in test HI-1
(Based on ^{125}Sb data)

Location	Temperature (°C)	Antimony found in each location: Mass (μg)	Percentage of total[a]
Furnace components			
Inlet end components	1000	N.D.[b]	
Tungsten susceptor	1400	N.D.	
ZrO_2 furnace tube	1400	N.D.	
ZrO_2 lower boat	1400	N.D.	
First ZrO_2 outlet insulator	~1200	N.D	
Second ZrO_2 outlet insulator	~1000	0.005	
Miscellaneous		0.001	
Furnace components total		0.006	0.00026
Thermal gradient tube			
Quartz furnace container at inlet of thermal gradient tube	~900	N.D.	
Segment 1	800-755[c]	0.372	
Segment 2	755-730[c]	0.526	
Segment 3	730-655	0.172	
Segment 4	655-555	0.106	
Segment 5	555-400	0.060	
Segment 6	400-295	0.039	
Segment 7	295-230	0.015	
Segment 8	230-190	0.003	
Segment 9	190-155	0.002	
Segment 10	155-135	N.D.	
Quartz tube (end)[d]	760-135	N.D	
Wipes from push rod			
Thermal gradient tube total		1.295	0.0565
Total released		1.301	0.0567

[a]Based on an average burnup of 28,058 MWd/t, the test fuel rod segment contained 2.58×10^2 μg ^{125}Sb and 2.294×10^3 μg total Sb in the fuel and 30.4 μg ^{125}Sb and 2.25×10^2 total Sb in the cladding; decay corrected to July 15, 1981. (From ORIGEN calculation made May 24, 1982.)

[b]N.D. denotes not detected.

[c]These temperatures were ~100°C lower at the start of the 30-min test.

[d]This piece of quartz enclosed the platinum liner. It broke off ~2.5 cm from the entrance to the thermal gradient tube.

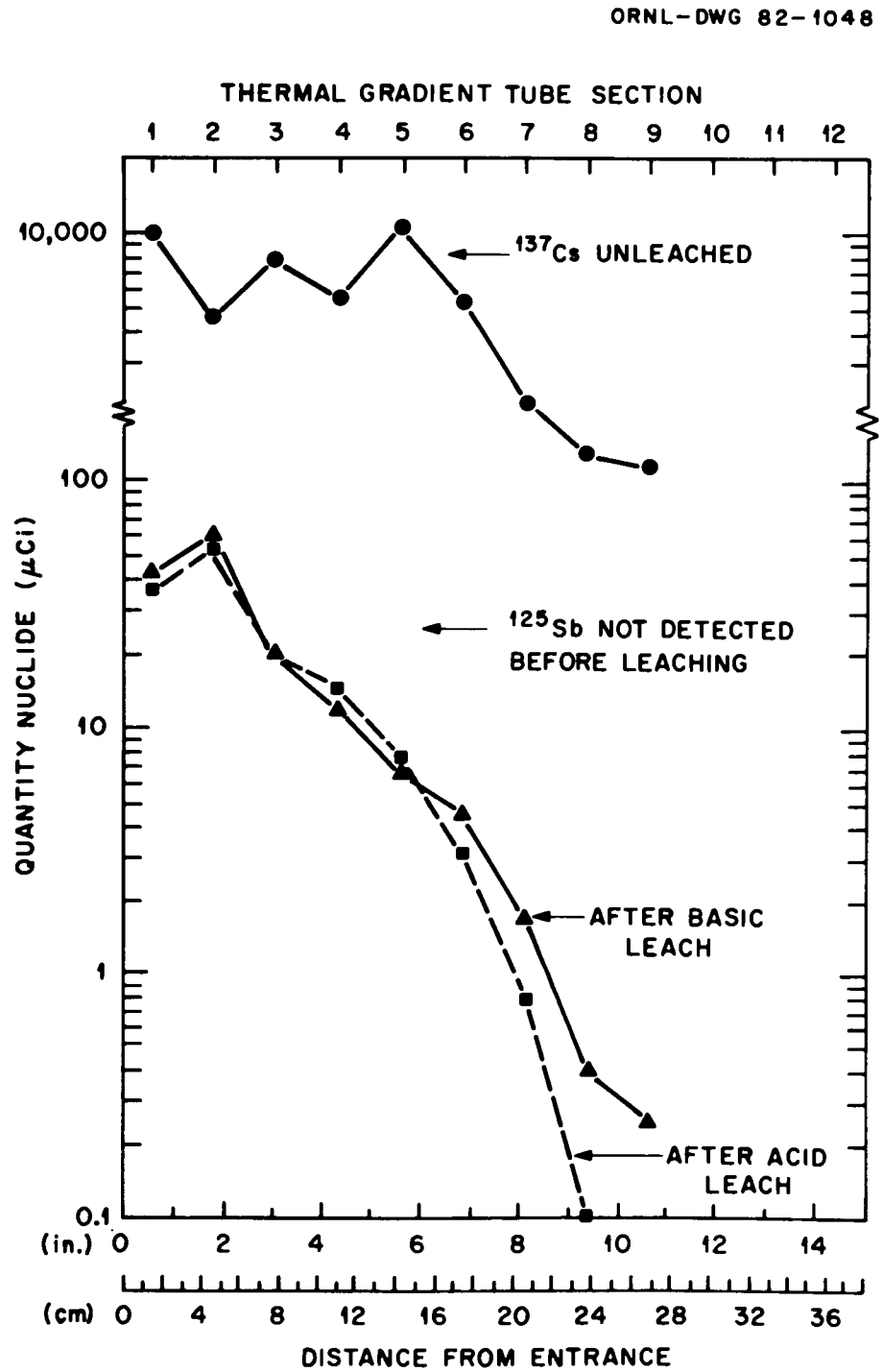

Fig. 13. Distribution of ^{137}Cs and ^{125}Sb in thermal gradient tube after leaching in test HI-1.

Table 8. Distribution of iodine in test HI-1, as determined by neutron activation analysis

Location	Temperature (°C)	Iodine found in each location: Mass (μg)	Percentage of total inventory[a]	Percentage of released	Ratio of cesium to iodine $\left(\frac{\mu g\ Cs}{\mu g\ I}\right)$
Furnace components					
ZrO_2 furnace tube	1400	2.45 ± 0.15[b]			44.4
First ZrO_2 outlet insulator	~1200	0.48 ± 0.03			3592
Second ZrO_2 outlet insulator	~1000	1.22 ± 0.07			185
Furnace components total		4.15 ± 0.25	0.016	0.81	
Thermal gradient tube					
Quartz tube (entire)	900-135	4.6 ± 0.3			48.8
Segments 1 and 2	800-730[c]	16.7 ± 1.0			23.5
Segments 3 and 4	730-555	24.7 ± 1.5			14.4
Segments 5 and 6	555-295	102.6 ± 6.1			4.14
Segments 7 and 8	295-190	39.9 ± 2.4			2.31
Segments 9 and 10	190-135	21.7 ± 1.3			2.06
Thermal gradient tube total		210.2 ± 13	0.835	40.88	
Filter pack					
Entrance tube	120	33.2 ± 2.0			2.13
Teflon entrance core	120	5.35 ± 0.35			1.36
Glass wool filter	120	228.1 ± 13.1			3.87
Teflon membrane insert	120	0.17 ± 0.01			4.2
First HEPA filter	120	15.74 ± 0.94			3.33
Second HEPA filter	120	0.614 ± 0.037			2.05
Charcoal	120	2.52 ± 0.13			0.028
Filter pack body	120	14.2 ± 0.9[d]			
Filter pack total		299.8 ± 17	1.191	58.31	
Totals		514.1 ± 30[e]	2.042[e]	100.00	

[a]Based on an average burnup of 28,000 MWd/t, the test fuel rod segment contained 1.907×10^4 μg ^{129}I and 2.518×10^4 μg total iodine, decay corrected to July 15, 1981. (From ORIGEN calculation made on May 24, 1982.)

[b]Error values are estimated radiochemical errors only.

[c]The temperatures at the inlet end of the thermal gradient tube were ~100°C lower at the start of the 30-min test.

[d]This measurement was rechecked satisfactorily, but it is not understood why the amount is so large.

[e]Additional iodine was released as fuel fines.

apparatus, small amounts of released iodine may have gone undetected. A comparison of the iodine results with those for cesium and krypton, however, indicates that most of the released iodine was measured.

3.2.3 Spark source mass spectrometry (SSMS) results

As the name implies, spark source mass spectrometry (SSMS) uses an electric spark to vaporize a small quantity of material, and a mass spectrometer to measure the amounts of each mass number from the vaporized material. The method is semiquantitative if a known mass of tracer material is added or if a known mass is already present (as ^{137}Cs was in our case). Advantages of this method of analysis are: (1) it can measure small quantities of a single material in the presence of large quantities of others (to about one part in 10,000); (2) only small quantities of sample are required; and (3) high radioactivity does not interfere. Also, in many cases, the isotopic distribution (mass distribution) can be used to determine whether the element was radiogenic in origin (a fission product) or of natural origin. Disadvantages are the semiquantitative nature (precision about a factor of 2) and the relatively high cost per sample. However, when we consider this cost to be divided among the 10 or 20 elements of serious interest, the cost per element is not unreasonable.

The procedure employed with test HI-1 was to obtain smear samples directly on the SSMS graphite electrodes. Three portions of the thermal gradient tube, as well as the perforated Teflon sheet compressing the inlet side of the glass wool filter, were smeared in as representative a manner as possible.

For all four samples, the isotopic distribution for cesium mass numbers 133, 134, 135, and 137 agreed very well with the distribution calculated by the ORIGEN program. The masses measured by SSMS were therefore normalized to the measured 137 (Cs) mass, and the results are shown in Table 9. Thermal gradient tube segments 1, 2, and 3 were smear-sampled together; segments 5 and 6 were sampled together, and segments 8 and 9 were also sampled together. The masses of cesium were determined by direct gamma counting of the combined segments, and the masses of other elements were proportioned according to the SSMS results. The "total" column in Table 9 includes amounts estimated to be in the unsampled segments 4, 7, and 10. Figure 14 shows the location of these segments and the temperatures measured on the outside surface of the quartz tube surrounding the platinum foil collector lining the thermal gradient tube.

Nine fission products or probable fission products (La, Ba, Sr) were detected. Normal Mo and Sb were present in greater amounts than fission-product Mo and Sb. The chemical analogs Cs and Rb exhibited similar behavior, as did I and Br. The Cs/I ratios determined by SSMS for the thermal gradient tube samples were lower than those determined by combined gamma counting (Cs) and neutron activation (I), but they were within the stated accuracy for SSMS measurements.

Table 9. Spark source mass spectrometry (SSMS) results[a]
(based on ^{137}Cs gamma spectrometric data)

Element	Amount on thermal gradient tube segments (μg)			Filter pack (μg)	Total in thermal gradient tube and filter[b] (μg)	Predicted amount (μg)
	1, 2, 3	5, 6	8, 9			
Fission products						
Cs (R)[c]	600	425	64	1010	2460	2330[d]
I (R)	80	240	110	210	850	500[d]
Rb (R)	80	19	5.6	88	220	300
Br	<8	75 (R)	5.6 (R)	88 (R)	210	54
Te	26 (E)	9 (R)	<9 (R)	<44 (R)	75 ± 30	170
Ag	18 (R)	<2 (R) or <0.4 (N)	<0.3	<9 (R) or <4 (N)	29 ± 7 (R)	5
La (E)	<3	<0.4	<0.3	26	28 ± 2	43
Ba (E)	<5	<0.9	<0.8	9	13 ± 4	180
Sr (E)	<0.8	<0.09	<0.14	<0.2	<1.6	29
Special materials						
Pt	260,000[e]	190	560			
Sn (N)	21,000[e]	190	840	3000	29,000	1000 (C)
Zr (N)	520	90	560	130	1,900	40 (C)
Mo (N)	80	55	22	88	300	120 (R)
Sb	18 (E)	<0.6 (N)	5.6 (N)	<4 (N)	35 ± 3	5 (R)
Si		<6	14		~30	
U	<5	<8	<1.6	<4	<24	350
Other materials						
Cd	<80	190	1100	8800	11,000	
W	5200	900	280	2200	10,000	
Pb	1600	190	840	880	4,400	
Bi	260	190	1100	880	3,500	
S	130	37	110	400	800	
Fe	240	9	28	~44	~380	
Hf		55	110			
Y	80	19	84	18		
Ni		~1.3	14	~130		
Cr	24	1.3	3	9		
Cu	52	2	3	26		
Mn	3	1.3		~22		

[a]Amounts are accurate only within a factor of 2.

[b]Includes estimated amounts in thermal gradient tube segments 4, 7, and 10.

[c](R) = radiogenic origin, (N) = natural origin, (E) = either radiogenic or natural origin, and (C) = cladding origin.

[d]Amount actually found.

[e]Erratic results.

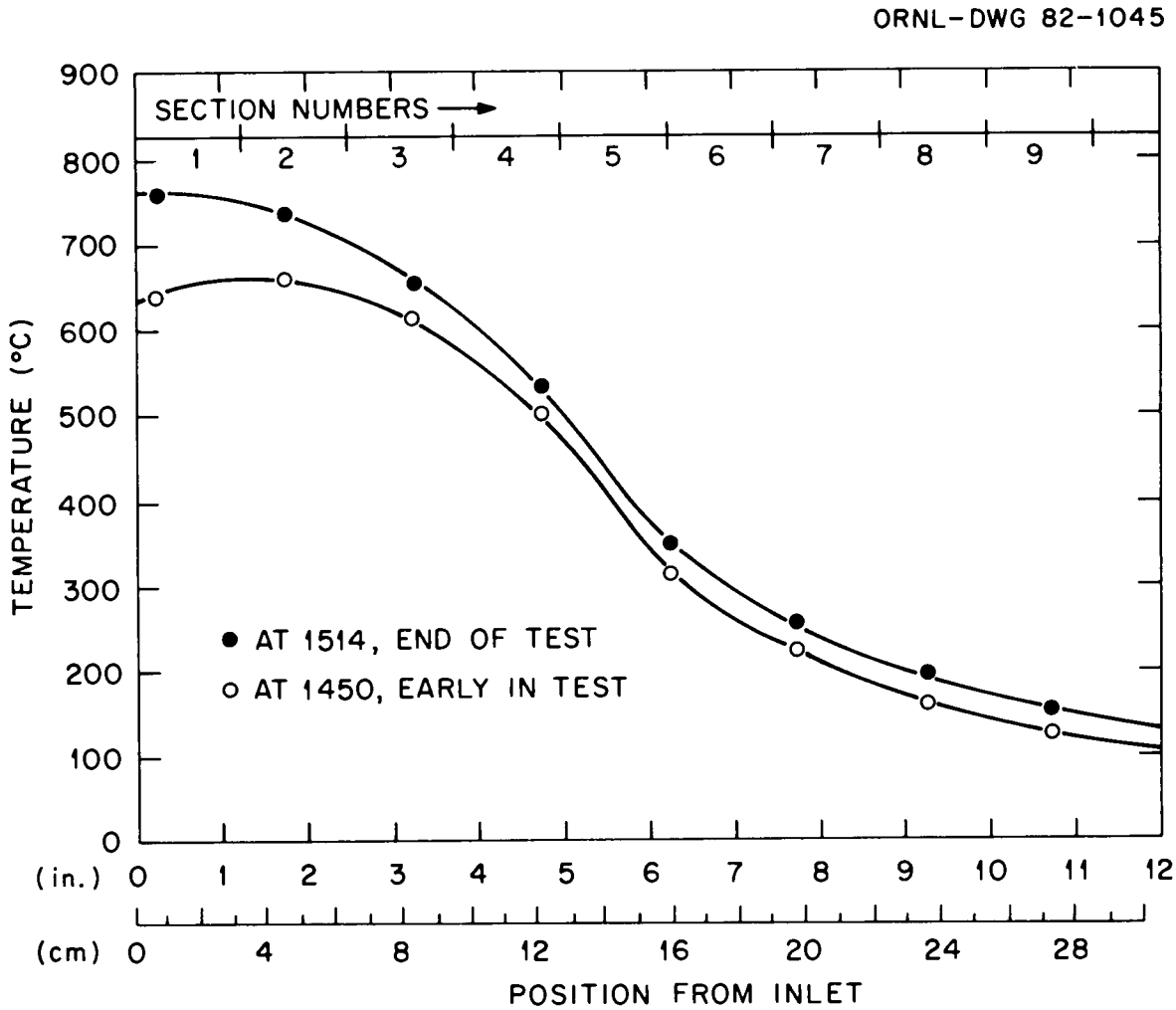

Fig. 14. Temperature distribution in thermal gradient tube in test HI-1.

The Pt and Sn concentrations varied erratically among the three SSMS measurements made with the smear sample taken from segments 1, 2, and 3. (Three exposures of varying intensity were made with each sample to improve precision over the wide ranges of concentration.) However, the Pt/Sn ratio was constant in all three exposures, which suggests that the tin was alloyed with the platinum in this region. The first 2.5 cm of the platinum foil was embrittled and very weak; this might have resulted from alloying with tin and other metals. Notice that the tin content is 8% by weight or 13% by atom. It is almost certain that this is not a representative sample for the entire length of segments 1, 2, and 3. If the total release of tin shown in Table 8 is correct (which is doubtful), and if all of the tin came from the cladding, it represents a release of 6.5%.

Several elements apparently were released from the tungsten susceptor and the ceramic insulators in the furnace. These included Cd, W, Pb, Bi, and S. Although they were present only in milligram quantities, their masses exceeded those of the released fission products. The total mass of aerosol transported to the filter pack was ~21 mg, based on SSMS data. The average aerosol concentration was therefore ~0.08 g/m^3 (1400°C) assuming a flow rate of 1.5 L (25°C)/min and a test time of 30 min.

3.2.4 Distribution of cesium in the furnace

The concentrations of cesium (μg Cs/cm^2 surface area) deposited on furnace components of test HI-1 are shown in Fig. 15. The concentrations of the deposits vary widely within short distances, which suggests chemical reactions with some of the materials. The deposit on the ZrO_2 tube surrounding the fuel specimen was very low, indicating minimal reaction. However, deposition on the first ZrO_2 outlet insulator was very heavy. This could have resulted from a chemical reaction or from a temperature distribution that may have caused condensation of some species within the insulator.

The second ZrO_2 outlet insulator shows what appears to be the beginning of a condensation peak that continues into the platinum. A high concentration deposit occurred in the middle of the peak on the exposed quartz. This rapid reaction of cesium with quartz is similar to that previously observed when a quartz furnace liner was used; it was attributed to the reaction between CsOH and quartz. Cesium hydroxide would not be expected to condense until the surfaces cooled to ≈400°C.

3.2.5 Distribution and form of cesium along the thermal gradient tube

In an effort to obtain a detailed profile of the gamma radioactivity (primarily cesium) along the thermal gradient tube, it was scanned at 1.3-cm intervals using a 1.3-cm slit. This profile, shown in Fig. 16, clearly shows three ^{137}Cs peaks at locations that should have corresponded to maximum temperatures of 760, 650, and 400°C. Although we have no specific analyses for the chemical form of the cesium in these peaks, consideration of the elements present and their physical and chemical properties suggests two possibilities:

ORNL DWG 82-1044

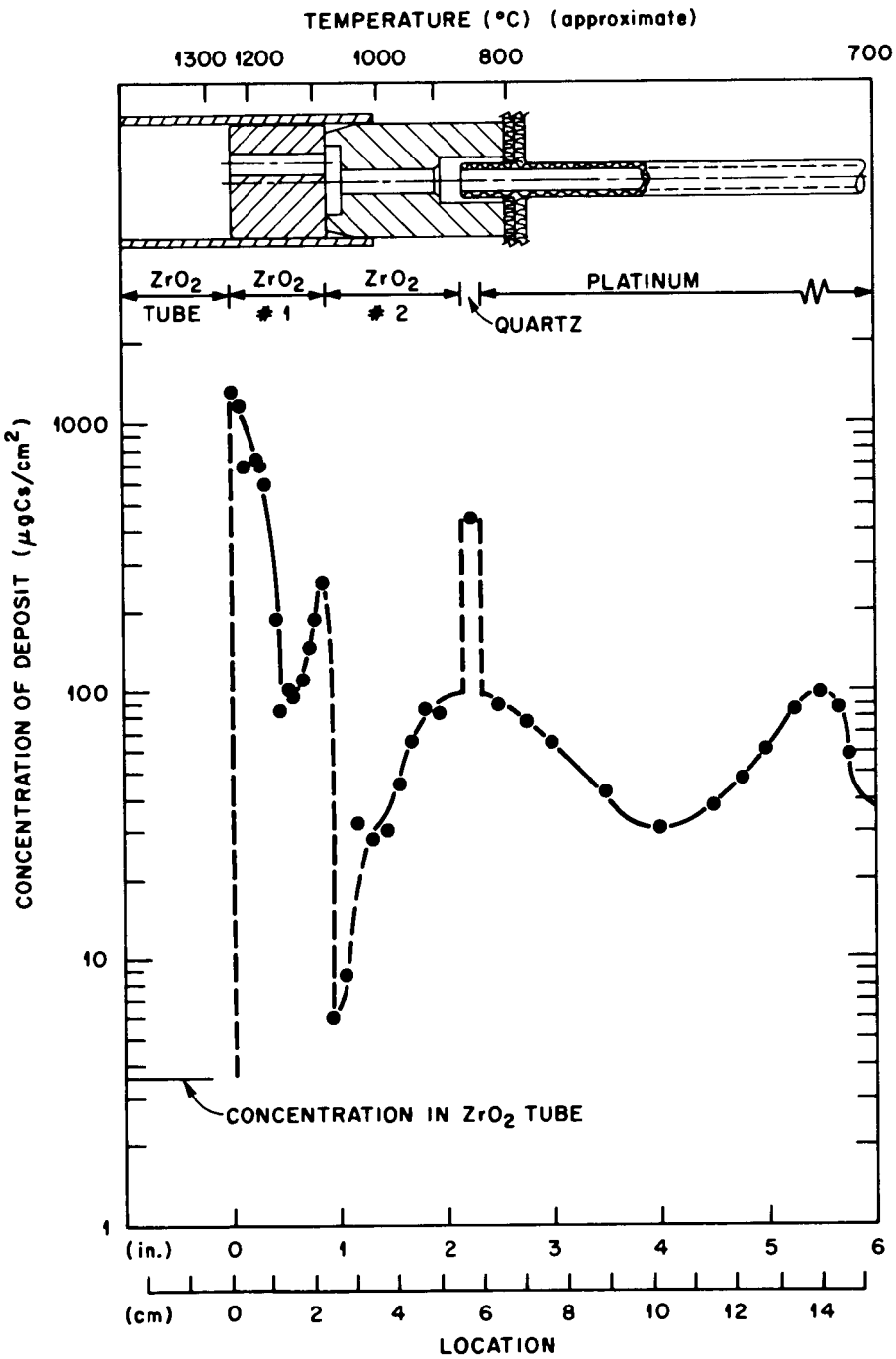

Fig. 15. Concentration of deposited cesium in furnace outlet in test HI-1.

ORNL-DWG 82-1046R

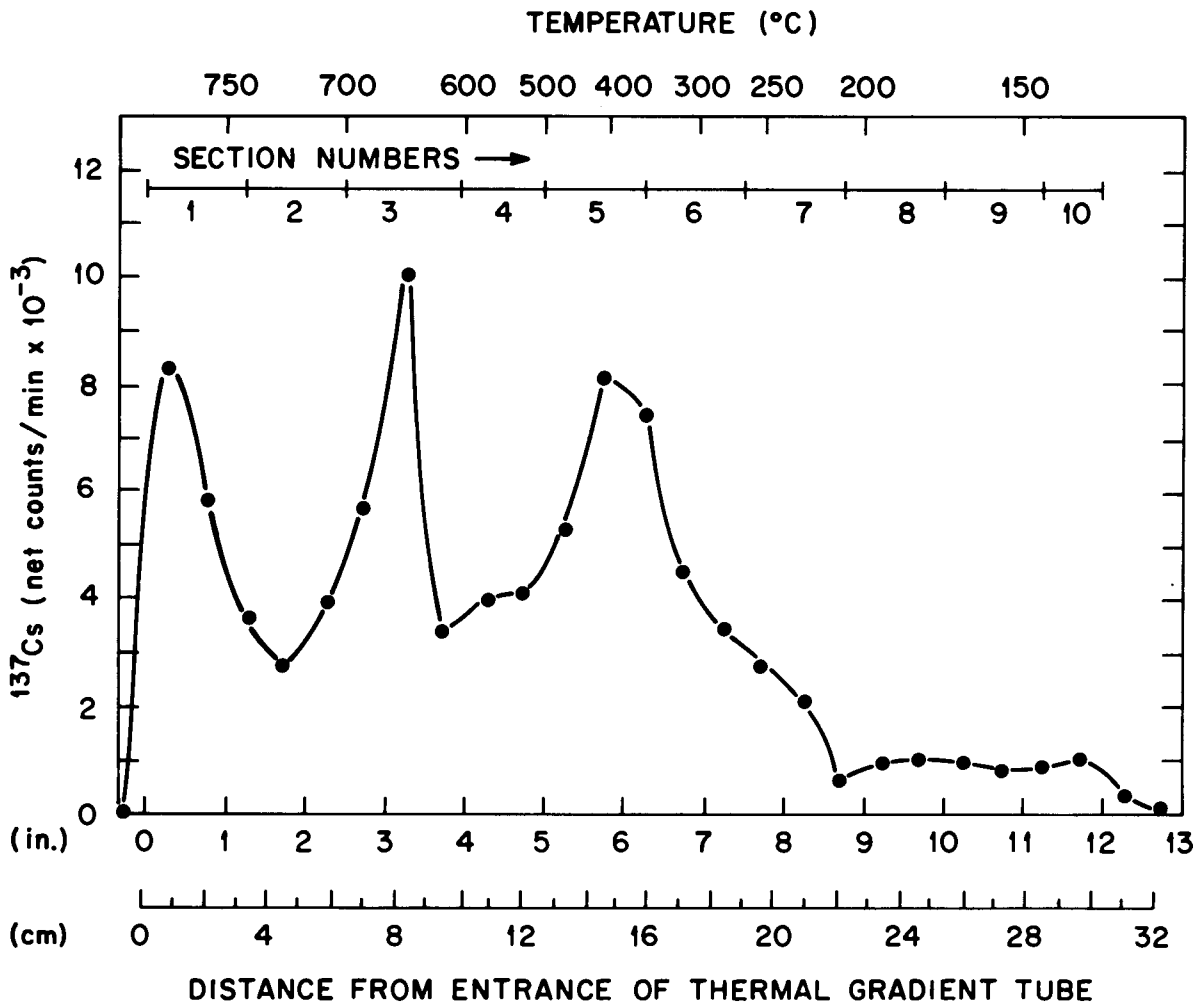

Fig. 16. Distribution of ^{137}Cs along platinum thermal gradient tube (before sectioning for leaching) and locations of subsequent cuts.

1. The peak at about 400°C could be largely CsI, based on the results of earlier tests.[3,4]

2. The higher-temperature peaks probably result from the interaction of fission product cesium with structural materials in the gas phase; the reaction of cesium species (perhaps Cs_2O or CsOH) with tungsten oxides (mostly WO_3) seems a likely possibility. A practical method for specific identification of this material is being sought.

3.2.6 Examination of cladding chip

During the process of unloading the fuel specimen from the furnace after the test, a small piece of the heavily oxidized cladding was separated from the fuel specimen. The approximate dimensions of this cladding chip were 5 mm × 7 mm, and the weight was 0.24 g. The interior surface was reasonably smooth, with no evidence of adherent UO_2 or of fuel/cladding reaction. The results of gamma spectrometric analysis of this chip are shown in Table 10. Because the presence of ^{144}Ce and ^{154}Eu, which have very low volatility, indicates that a small amount of UO_2 fuel was present, the chip was leached in an acid solution, then recounted. These data are shown in Table 10 also. The results of analysis after acid leaching indicated removal of ~85% of the cesium and ~50% of the europium; cerium was not detected. However, only a small percentage of the Mn, Co, Ru, Ag, and Sb were removed, indicating that these elements either were in a relatively insoluble form or were inaccessible (alloyed with the cladding), compared to the Cs, Eu, and Ce on the surface.

Table 10. Analysis of oxidized cladding specimen

Approximate dimensions: 5 mm × 7 mm, ~25 mm^2
Mass: 0.24 g

Nuclide	Amount of radioactivity (μCi)		
	Initial specimen	Specimen acid leach	Leach solution
^{54}Mn	2.707	2.356	N.D.[a]
^{60}Co	4.622	4.085	0.1692
^{106}Ru	152.4	140.1	N.D.
^{110m}Ag	14.41	14.12	N.D.
^{125}Sb	191.7	183.6	2.139
^{134}Cs	82.87	12.48	56.68
^{137}Cs	131.6	18.81	91.40
^{144}Ce	21.21	N.D.	9.364
^{154}Eu	1.092	0.6311	0.380

[a]N.D. denotes not detected.

3.2.7 Analysis of material deposited on the Teflon filter disc

A small circle of Teflon membrane filter material was placed behind one of the circular openings in the perforated Teflon sheet used to compress the entrance end of the glass-wool prefilter. The purpose of this disc was to obtain a small representative sample of aerosol particles on a collector that could be handled easily and subjected directly to analytical procedures such as neutron activation or energy dispersive x-ray analysis without interference from the collector material.

The results obtained by gamma counting of radioactive cesium and by neutron activation of other elements are summarized in Table 11. The high activities of ^{137}Cs and ^{134}Cs limited the sensitivity of detection for many elements. Energy dispersive x-ray analysis was not attempted because of the high radioactivity and the low mass of the deposited material.

Table 11 also lists the amounts of various elements expected to be present, based on SSMS analysis of material taken from the surface of the perforated Teflon sheet used to hold the Teflon disc and glass-wool prefilter in place. These estimates of materials were calculated by normalizing the SSMS sample data with the 0.68 μg cesium that was found by direct gamma counting. The comparison between the SSMS and neutron activation results is rather poor. The cesium/iodine ratio is consistent in each case and compares well with the cesium/iodine ratio found on other filter-pack components, as shown in Table 8. Neutron activation analysis of the Teflon filter deposits probably will not be used in future tests.

3.2.8 Fuel specimen examination

Following a visual examination after removal from the furnace, the specimen was cast in epoxy resin and transferred to the High Radiation Level Examination Laboratory (HRLEL) for sectioning and detailed study. As noted previously (Sect. 2.4, Fig. 7), the specimen exhibited the brittle, heavily-oxidized cladding expected for the test conditions. Two short transverse sections were cut from near the center of the specimen, and one was mounted and polished for metallographic examination. Preliminary study of this section (shown in Fig. 17, along with an untested section from the same fuel rod) revealed extensive cladding oxidation, numerous fractures and "pullouts" (small voids resulting from surface preparation of a brittle material) in the oxidized cladding, and further fracturing of the UO_2 as a result of the high-temperature release test.

More detailed evaluation of the fuel and cladding microstructures will be reported in the data summary report for the next test, HI-2. In the interest of economy, the metallographic specimens are being examined in small groups of 2 to 3. In addition, specimens will be shipped to Argonne National Laboratory for further microstructural and microchemical analyses.

Table 11. Analysis of material deposited on Teflon filter disc

Element	Amount found by neutron activation (μg)	Amount calculated with SSMS[a] data from nearby sample (μg)
Cd		~6.0
Sn		2.0
W	0.03	1.5
Cs (R)[b]	0.68[c]	0.68
Pb		0.6
Bi		0.6
S	<14.0	0.3
I (R)	0.17	0.14
Zr	0.48[d]	0.1
Ni		~0.1
Mo	<0.02	0.06
Rb (R)		0.06
K	0.022	0.06
Te (R)		<0.03
Fe		~0.03
Cu	0.06	0.02
La	0.0004	0.02
Na	0.03	0.01
Mn	0.0005	0.015
Ag (R)		0.006
Al	0.03	0.006
Cl	0.035	
V	0.006	
Pr	0.002	
U		<0.003

[a]Spark source mass spectrometry analysis was done on a sample taken from a location near the Teflon filter disc.

[b](R) indicates isotopic distribution of radiogenic origin corresponding to nearby SSMS sample.

[c]Determined by direct gamma ray spectrometry and used as the reference value for calculating the amounts determined by SSMS.

[d]This amount is higher than expected.

R 77626

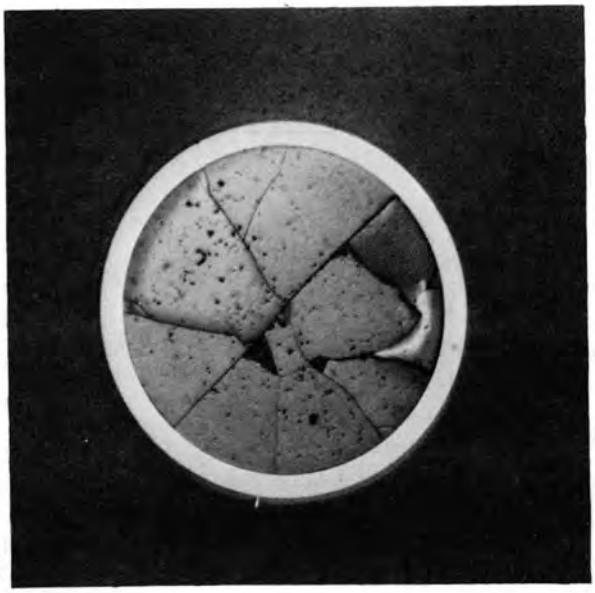

(a)

R 77627

(b)

Fig. 17. Sections of fuel rod prepared for metallographic examinations: (a) control specimen for rod H-15, untested, ~4.5×, and (b) specimen for test HI-1, ~4.8×, including ZrO_2 boat.

4. CONCLUSIONS

As indicated in Sect. 1, only limited data evaluation and interpretation is included in this data summary report. Further evaluation, interpretation, and correlation of test data will be included in a future topical report, which will consider the results of several tests over a range of test conditions. Therefore, current conclusions are preliminary and are limited to the following observations.

1. Operation of the test was successful; the planned temperatures, times, and flow rates were achieved.

2. The on-line release rate measurements for ^{85}Kr and ^{137}Cs (Fig. 10) indicated that release behavior was similar to that observed in previous tests under similar conditions.[3]

3. The appearance of the fuel specimen after the test was consistent with test results from unirradiated specimens; the Zircaloy cladding was severely weakened and embrittled by heavy oxidation, and some specimen disintegration occurred during removal from the furnace. This extensive oxidation was corroborated by flow data, which indicated that sufficient hydrogen was formed during the test to account for oxidation of >80% of the zirconium to ZrO_2.

4. Total release values for Kr, I, and Cs were 2.83%, 2.04%, and 1.75%, respectively. When compared with predictions based both on previous work[5] and on a recent comprehensive review sponsored by the NRC,[10] these values agree within ~30%, which is considered reasonably good.

5. Other nuclides detected (the fission products ^{125}Sb, ^{106}Ru, ^{144}Ce, and ^{154}Eu and the cladding activation product, ^{60}Co) were found only in the furnace or in very small fractions (<0.1%) in the collection system. With the exception of some apparent combination of Sn and Sb with the platinum thermal gradient tube, no unexpected behavior of these elements was observed.

6. The results of spark source mass spectrometry on samples from selected locations generally supported the other data and also provided information about the release of a number of structural and impurity elements from the furnace.

5. REFERENCES

1. M. F. Osborne, R. A. Lorenz, and R. P. Wichner, *Program Plan for Fission Product Release from LWR Fuel in Steam* (April 1982).

2. R. A. Lorenz, J. L. Collins, A. P. Malinauskas, O. L. Kirkland, and R. L. Towns, *Fission Product Release from Highly Irradiated LWR Fuel*, NUREG/CR-0722 (ORNL/NUREG/TM-287/R2) (February 1980).

3. R. A. Lorenz, J. L. Collins, A. P. Malinauskas, M. F. Osborne, and R. L. Towns, *Fission Product Release from Highly Irradiated LWR Fuel Heated to 1300-1600°C in Steam*, NUREG/CR-1386 (ORNL/NUREG/TM-346) (November 1980).

4. R. A. Lorenz, J. L. Collins, M. F. Osborne, R. L. Towns, and A. P. Malinauskas, *Fission Product Release from BWR Fuel Under LOCA Conditions*, NUREG/CR-1773 (ORNL/NUREG/TM-388) (July 1981).

5. R. A. Lorenz, J. L. Collins, and A. P. Malinauskas, *Fission Product Source Terms for the LWR Loss-of-Coolant Accident*, NUREG/CR-1298 (ORNL/NUREG/TM-321) (July 1980).

6. P. E. MacDonald to A. P. Malinauskas, *Transmittal of CPL Assembly B05 Axial Flux Measurements*, MacD-76-75 (Sept. 11, 1975).

7. M. F. Osborne and G. W. Parker, *The Effect of Irradiation on the Failure of Zircaloy-Clad Fuel Rods*, ORNL-TM-3626 (January 1972).

8. H. Albrecht, M. F. Osborne, and H. Wild, *Experimental Determination of Fission and Activation Product Release During Core Meltdown*, Proceedings of Thermal Reactor Safety Meeting, Sun Valley, Idaho, Aug. 1-4, 1977.

9. A. G. Croff and C. W. Alexander, *Decay Characteristics of Once-Through LWR and LMFBR Spent Fuels, High Level Wastes, and Fuel-Assembly Structural Material Wastes*, ORNL/TM-7431 (November 1980).

10. *Technical Bases for Estimating Fission Product Behavior During LWR Accidents*, NUREG-0772, U.S. Nuclear Regulatory Commission (June 1981).

APPENDIX:

FISSION PRODUCT RELEASE TESTS — GENERAL PROCEDURE

FISSION PRODUCT RELEASE TESTS — GENERAL PROCEDURE

A. Days before test:

1. Prepare system — furnace ceramics, TG tube, filter package, tools, traps, etc. in both Cell B and Cell D.

2. Check operation of heaters, thermocouples, recorders, flowmeters, etc.

3. Prepare fuel specimen, ready to bring into Cell B.

4. Verify in-cell remote handling procedures.

5. Collect fuel specimen data and specify test operating conditions.

6. Fill steam generator.

7. Evacuate and leak-check test apparatus.

8. Check operation of all radiation detectors; calibrate with standard or accurately known sources.

9. Prepare and check posttest examination equipment in Cell D and scanner above Cell B.

B. Day of test:

1. Recheck all radiation detectors, MCA, data recording program, and data acquisition system.

2. Close and lock all cells, tape doors, and set Cell B vacuum (1.0 in H_2O).

3. Bring in fuel specimen, install in furnace, and connect lines.

4. Evacuate, purge, and leak-check test apparatus with steam line heat on.

5. Close box; set vacuum to 10 in H_2O and 40 L/min air flow.

6. Set Ar flow: MFM-2 = 0.2 L/min.

7. Preheat furnace slowly to 300°C.

8. Heat steam generator, begin flow to vent at 0.3 L/min Ar (MFM-3) and T_{SG} = 95.6°C, to provide 1.0 L/min steam (25°C).

9. Measure backgrounds for all detectors, check and record all flow rates and back pressures.

10. Begin steam flow through furnace, record flow rates and back pressures, and adjust TGT furnaces as needed.

11. Set data acquisition system (DAS) to 1-min recording cycle.

12. When all flows are stable (~5 min), begin planned heatup cycle, ~300° to test temperature.

13. Considering correction factors for thermocouple and optical pyrometer, reduce power when test temperature is reached to maintain for desired time period.

14. Monitor all instruments and chart recorders and mark at regular intervals during test, each experimentalist having specific responsibilities.

15. Turn power off at end of test period, continuing steam flow until temperature drops below 1200°C.

16. Turn steam generator power off and switch steam flow to vent, with MFM-3 argon bypassing steam generator.

17. Continue argon flow through furnace ~30 min to dry system, then turn off power to line heaters, TGT, filter furnaces, and gas purification furnaces.

18. Reduce argon flow to MFM-2 = 0 and MFM-3 = 0.1 L/min, and bypass condenser, dryer, and cold charcoal traps.

19. Turn on vacuum pump and reduce pressures in cold traps to ~0.5 atm; then close traps individually and remove from system.

C. Days following test:

1. Reduce vacuum on containment box; open and inspect furnace assembly; begin off-gas flow to prefilter at furnace inlet.

2. Disconnect filter package from TGT, then at outlet, and transfer from Cell B to Cell D for disassembly.

3. Record another set of gamma spectra for background evaluation.

4. Remove TGT liner, load into transfer tube, and remove to scanner above Cell B.

5. Record another set of gamma spectra for background evaluation.

6. Disconnect lines, open furnace, and remove fuel specimen; inspect, photograph, seal in epoxy, and remove from Cell B.

7. Record another set of gamma spectra for background spectra.

8. Complete Cell B decontamination before further furnace disassembly, if possible.

9. Scan TGT liner at 1/2-in. intervals, and count entire liner through required Pb shielding; transfer to Cell D.

10. Proceed with sample collection from TGT liner and filter package in Cell D and from furnace in Cell B.

NUREG/CR-2928
ORNL/TM-8500
Dist. Category R3

INTERNAL DISTRIBUTION

1. R. E. Adams
2. E. C. Beahm
3. L. H. Bell
4. J. T. Bell
5. D. O. Campbell
6. J. L. Collins
7. J. H. Goode
8. C. E. Lamb
9. T. B. Lindemer
10. R. A. Lorenz
11. A. L. Lotts
12. A. P. Malinauskas
13. K. S. Norwood
14-18. M. F. Osborne
19. J. H. Shaffer
20. R. D. Spence
21. M. G. Stewart
22. O. K. Tallent
23. L. M. Toth
24. R. L. Towns
25. J. R. Travis
26. C. S. Webster
27. S. K. Whatley
28. R. P. Wichner
29. A. L. Wright
30. Document Reference Section
31. Central Research Library
31. Laboratory Records
32. Laboratory Records, RC
33. ORNL Patent Section

EXTERNAL DISTRIBUTION

35. Office of Assistant Manager, Energy Research and Development, Department of Energy, Oak Ridge Operations Office, P.O. Box E, Oak Ridge, TN 37830
36-37. Director, Division of Reactor Safety Research, Nuclear Regulatory Commission, Washington, DC 20555
38. Ms. L. Chan, Fuel Behavior Branch, U.S. Nuclear Regulatory Commission, 7915 Eastern Ave., Mail Stop 1130 S.S., Silver Spring, MD 20910
39. M. Silberberg, Chief, Fuel Behavior Branch, U.S. Nuclear Regulatory Commission, 7915 Eastern Ave., Mail Stop 1130 S.S., Silver Spring, MD 20910
40. M. W. Jankowski, Fuel Behavior Branch, U.S. Nuclear Regulatory Commission, 7915 Eastern Ave., Mail Stop 1130 S.S., Silver Spring, MD 20910
41. M. J. Steindler, Argonne National Laboratory, CMT-205, 9700 S. Cass Ave., Argonne, IL 50439
42-43. Technical Information Center, DOE, Oak Ridge, TN 37830
44-358. Given Distribution as shown in Category R3 (NTIS-10)

☆U.S. GOVERNMENT PRINTING OFFICE: 1983-646-055/255