LOCKHEED MARTIN ENERGY RESEARCH LIBRARIES

3 4456 0452223 8

ORNL/TM-8140

ornl

OAK
RIDGE
NATIONAL
LABORATORY

UNION
CARBIDE

# Fabrication of Zero Power Reactor Fuel Elements Containing $^{233}U_3O_8$ Powder

R. G. Nicol
J. R. Parrott
A. M. Krichinsky
W. D. Box
C. W. Martin
W. R. Whitson

OPERATED BY
UNION CARBIDE CORPORATION
FOR THE UNITED STATES
DEPARTMENT OF ENERGY

Printed in the United States of America. Available from
National Technical Information Service
U.S. Department of Commerce
5285 Port Royal Road, Springfield, Virginia 22161
NTIS price codes—Printed Copy: A04 Microfiche A01

This report was prepared as an account of work sponsored by an agency of the United States Government. Neither the United States Government nor any agency thereof, nor any of their employees, makes any warranty, express or implied, or assumes any legal liability or responsibility for the accuracy, completeness, or usefulness of any information, apparatus, product, or process disclosed, or represents that its use would not infringe privately owned rights. Reference herein to any specific commercial product, process, or service by trade name, trademark, manufacturer, or otherwise, does not necessarily constitute or imply its endorsement, recommendation, or favoring by the United States Government or any agency thereof. The views and opinions of authors expressed herein do not necessarily state or reflect those of the United States Government or any agency thereof.

ORNL/TM-8140

Contract No. W-7405-eng-26

CHEMICAL TECHNOLOGY DIVISION

# FABRICATION OF ZERO POWER REACTOR FUEL ELEMENTS CONTAINING $^{233}U_3O_8$ POWDER

R. G. Nicol
J. R. Parrott*
A. M. Krichinsky
W. D. Box
C. W. Martin
W. R. Whitson*

*Retired.

Date Published - May 1982

OAK RIDGE NATIONAL LABORATORY
Oak Ridge, Tennessee 37830
operated by
UNION CARBIDE CORPORATION
for the
DEPARTMENT OF ENERGY

LOCKHEED MARTIN ENERGY RESEARCH LIBRARIES

3 4456 0452223 8

CONTENTS


Page

ABSTRACT . . . . . 1

1. INTRODUCTION . . . . . 1

2. SUMMARY . . . . . 2

3. $^{233}U$ PURIFICATION . . . . . 3

4. CONVERSION OPERATIONS . . . . . 4

5. FUEL ELEMENT PRODUCTION OPERATIONS . . . . . 4

5.1 Packet Preparation . . . . . 4
5.2 Packet Charging . . . . . 8
5.3 Packet Heating . . . . . 8
5.4 Seal Welding and Preliminary Inspection . . . . . 8
5.5 Leak Testing and Preliminary Decontamination . . . . . 14
5.6 Decontamination of Packets and Uranium Accountability . . 18
5.7 Acceptance of Packets . . . . . 23
5.7.1 Weight of powder . . . . . 23
5.7.2 Internal pressure . . . . . 23
5.7.3 Moisture content of powder . . . . . 23
5.7.4 Leak test . . . . . 23
5.7.5 Surface radioactivity . . . . . 23
5.7.6 Width and thickness . . . . . 23
5.7.7 Length . . . . . 25
5.7.8 Surface flaws . . . . . 25
5.8 Packet Identity . . . . . 25
5.9 Packaging and Storing . . . . . 25
5.10 Shipping . . . . . 28

6. FUEL ELEMENT PRODUCTION RESULTS . . . . . 28

6.1 Production and Efficiency . . . . . 28
6.2 Uranium Material Balance . . . . . 29
6.3 Quality Assurance . . . . . 29

7. SCRAP RECOVERY . . . . . 35

8. WASTE MANAGEMENT . . . . . 35

9. EQUIPMENT PERFORMANCE . . . . . 35

10. NUCLEAR SAFETY . . . . . 38

11. RADIATION EXPOSURES . . . . . 38

Page

12. ACKNOWLEDGMENTS . . . . . 39

13. REFERENCES . . . . . 42

14. APPENDIX . . . . . 43

# FABRICATION OF ZERO POWER REACTOR FUEL ELEMENTS CONTAINING $^{233}U_3O_8$ POWDER

R. G. Nicol, J. R. Parrott,* A. M. Krichinsky,
W. D. Box, C. W. Martin, W. R. Whitson*

ABSTRACT

Oak Ridge National Laboratory, under contract with Argonne National Laboratory, completed the fabrication of 1743 fuel elements for use in their Zero Power Reactor. The contract also included recovery of 20 kg of $^{233}U$ from rejected elements. This report describes the steps associated with conversion of purified uranyl nitrate (as solution) to $U_3O_8$ powder (suitable for fuel) and subsequent charging, sealing, decontamination, and testing of the fuel elements (packets) preparatory to shipment. The nuclear safety, radiation exposures, and quality assurance aspects of the program are discussed.

---

## 1. INTRODUCTION

The work that ORNL undertook for Argonne National Laboratory (ANL), which involved fabrication of fuel elements containing $^{233}U_3O_8$ powder for use in ANL's Zero Power Reactor (ZPR), included:

1. performing studies to determine the operating parameters of the conversion process so an acceptable powder could be obtained;
2. designing, installing, and testing fuel element fabrication process equipment; and
3. fabricating the required fuel elements in a specified time.

Because of the age of the starting uranyl nitrate and recycled oxide, purification by solvent extraction and/or ion exchange was required before conversion to $U_3O_8$ and subsequent charging into fuel element shells.

Details of the fabrication operations, including nuclear safety and personnel radiation exposure data, are included.

---

*Retired.

## 2. SUMMARY

A total of 1743 fuel elements (each containing 33 g of $^{233}U_3O_8$) was prepared from eight lots of powder and transferred in three shipments to Argonne National Laboratory (ANL), Idaho Falls, Idaho. Twenty kilograms of $^{233}U$ was recovered from reject elements by dissolution of oxide, purified by solvent extraction and/or ion exchange techniques, and recycled. An overall material balance (U) of 99.6% was obtained for the program.

The $U_3O_8$ powder (57.5 kg) was produced in 6- to 13-kg lots, using uranyl nitrate solution source material ($^{232}U$ content <10 ppm U) left over from the LWBR support program.[1] The source uranium was purified by ion exchange immediately prior to conversion to $U_3O_8$ powder to remove $^{232}U$ daughters, thus reducing the radiation exposure to personnel during oxide conversion (room 502) and element fabrication (room 501) in building 3019 at ORNL. Conversion rate was 6.6 kg of uranium per day in a medium of plant dry air at 800°C. The oxide was processed in an unshielded glove box facility using an ORNL-developed process outline that featured precipitation of ammonium diuranate (ADU) from a low-acid solution using ammonia, washing of the ADU cake in a centrifuge (to remove most of ammonium nitrate present), drying washed cake via microwave energy, and calcining dried cake in air at 800°C. (The last step was the only deviation from that reported in the LWBR support program.) The product oxide was packaged in stainless steel primary cans, each holding 500 to 600 g of powder, stored in "bird cage" containers in batches of four each in fissile material storage vault 3100, and transported back to the fabrication facility at a rate of one or two cans per day.

The high quality of the $^{233}U_3O_8$ powder was ensured by the administration of a quality assurance (QA) program developed at ORNL in compliance with contractual requirements and approval of ANL. The QA program included provisions for controlling (1) the quality of the feed material, (2) manufacturing process parameters and reagents, (3) qualification of the operating personnel, (4) calibration of process equipment, and (5) inspections required for qualifying each lot of powder and each individual fuel element preparatory to shipment.

Radiation exposure to operating personnel — a single individual or the entire group — did not exceed the recommended maximum quarterly dose (1300 mrem) at any time during the program. The exposure to radiation, which varied directly with the time spent, occurred during hood and glove box operations in the fabrication and recovery programs and while transporting powder and elements, both completed and in-process, to satisfy safeguards requirements.

Once the control parameters were set in preproduction runs, minor production delays were caused by the presence of organic material in solvent extraction product which remained in the ion exchange product (or conversion feed), faulty operation of the welder, and weld overhang that hindered decontamination. Two uranyl nitrate solutions containing greater than normal organic species produced a powder with above normal density, probably caused by increased sinterability during calcining. Blow holes developed from pressure in the elements caused by improper heating cycles, from faulty tracking of the welding torch, and from impurities on the packet metal, which caused sparking.

Most of the radiation exposure to operating personnel occurred while transporting the powder; charging, seal welding, and sanding excess weld on the packets; and opening reject packets to allow uranium recovery. Although the last operation was done sporadically, it was performed on elements containing uranium with the greatest age, thus containing the greatest concentration of $^{232}U$ daughters.

## 3. $^{233}U$ PURIFICATION

Nitrate solutions containing $^{233}U$ that had been generated in reject oxide dissolution operations and recycle solvent extraction and ion exchange solutions were purified by solvent extraction to recover the uranium. These partially purified solutions, containing <0.4 *M* acid, were purified by cation exchange to remove residual thorium and $^{232}U$ daughters sufficiently to permit conversion to $^{233}U_3O_8$ (Sect. 5) in unshielded glove boxes without intolerable personnel radiation exposure. The purification flow sheets are described in ref. 1.

## 4. CONVERSION OPERATIONS

The conversion equipment and operating procedures used in producing $^{33}U_3O_8$ were approximately the same as those reported in the LWBR report[1] for producing $^{233}UO_2$. The uranium in nitrate solution was precipitated as diuranate using $NH_3$. The precipitate was dried to 10% moisture content in a microwave oven and calcined to produce $U_3O_8$ by contacting with air at 800°C. The powder produced was stable and so required no "stabilization step" as was necessary in producing $UO_2$. The product was granulated to pass through a 100-mesh screen, blended, collected in stainless steel cans in 500- to 600-g quantities, bagged out of the product glove box, placed in "bird cage" containers in batches of four cans, and stored in vault 3100 until required for fuel element fabrication.

## 5. FUEL ELEMENT PRODUCTION OPERATIONS

The $^{233}U_3O_8$ powder produced in the oxide conversion facility (room 502 in building 3019) and aged less than 60 d was delivered in cans containing 500 to 600 g to the charging glove box (GB-1) in the fuel element fabrication facility (room 501 in building 3019) (Fig. 1). One day's supply (one or two cans) was bagged into GB-1 and stored behind a lead brick shield until needed for charging into the empty stainless steel packets (Fig. 2).

### 5.1 Packet Preparation

The stainless steel packets (shells plus associated lids) were fabricated by ANL according to their specifications and were shipped to ORNL in wooden boxes containing 500 to 1000 packets each. The packet parts were delivered to the ORNL plating shop where they were electropolished (to facilitate future decontamination), rinsed, dried, encased in plastic bags, and returned to building 3019. Identification numbers were etched on the large faces of the shells, and each shell, with a lid, was weighed (tare) using a Mettler balance (Fig. 3). A day's supply of units was bagged into GB-1 and placed in a packet storage rack in batches of four.

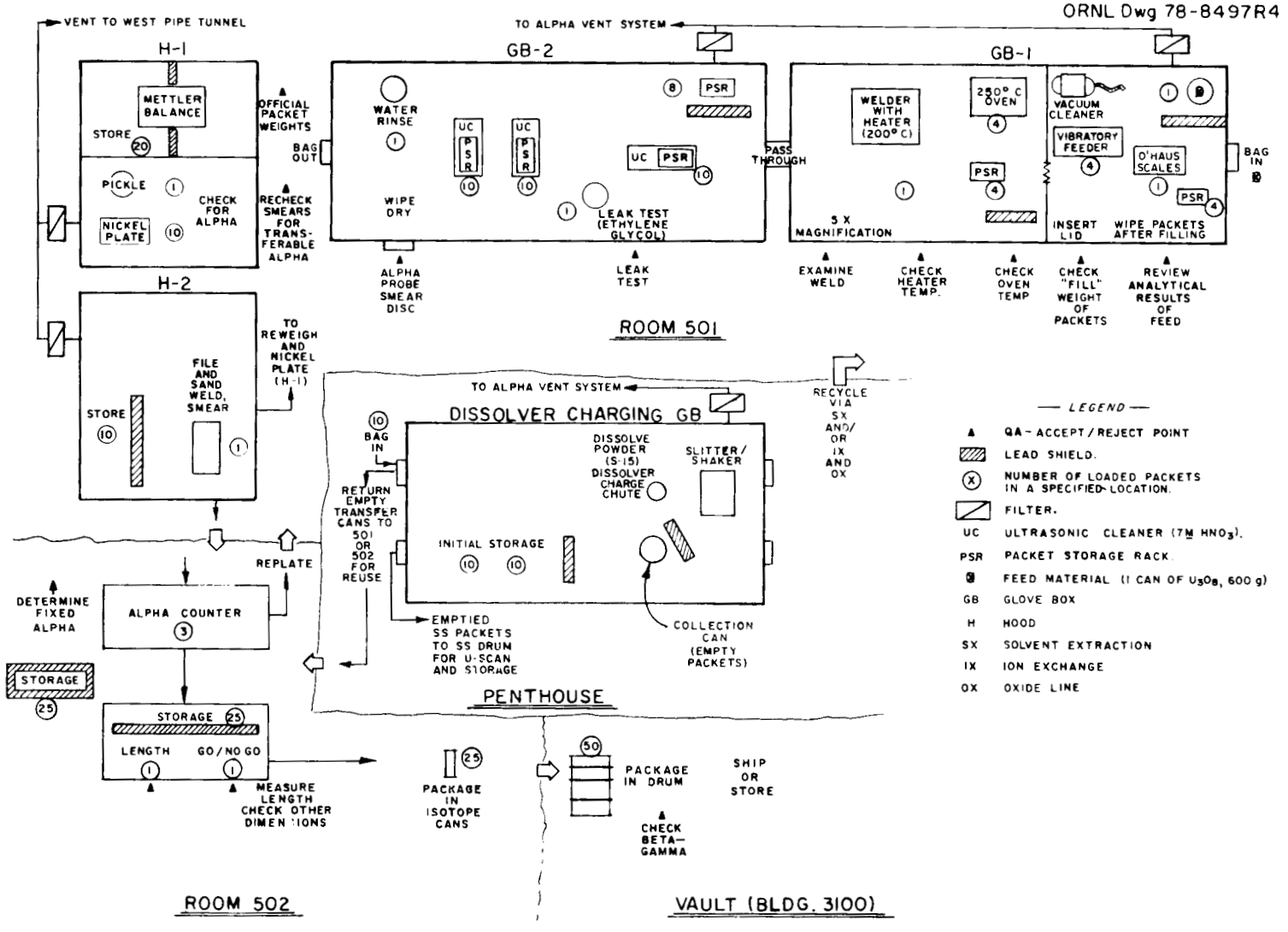


Fig. 1. ANL-ZPR program equipment located for $^{233}U_3O_8$ packaging operation.

ORNL Photo 1387-79

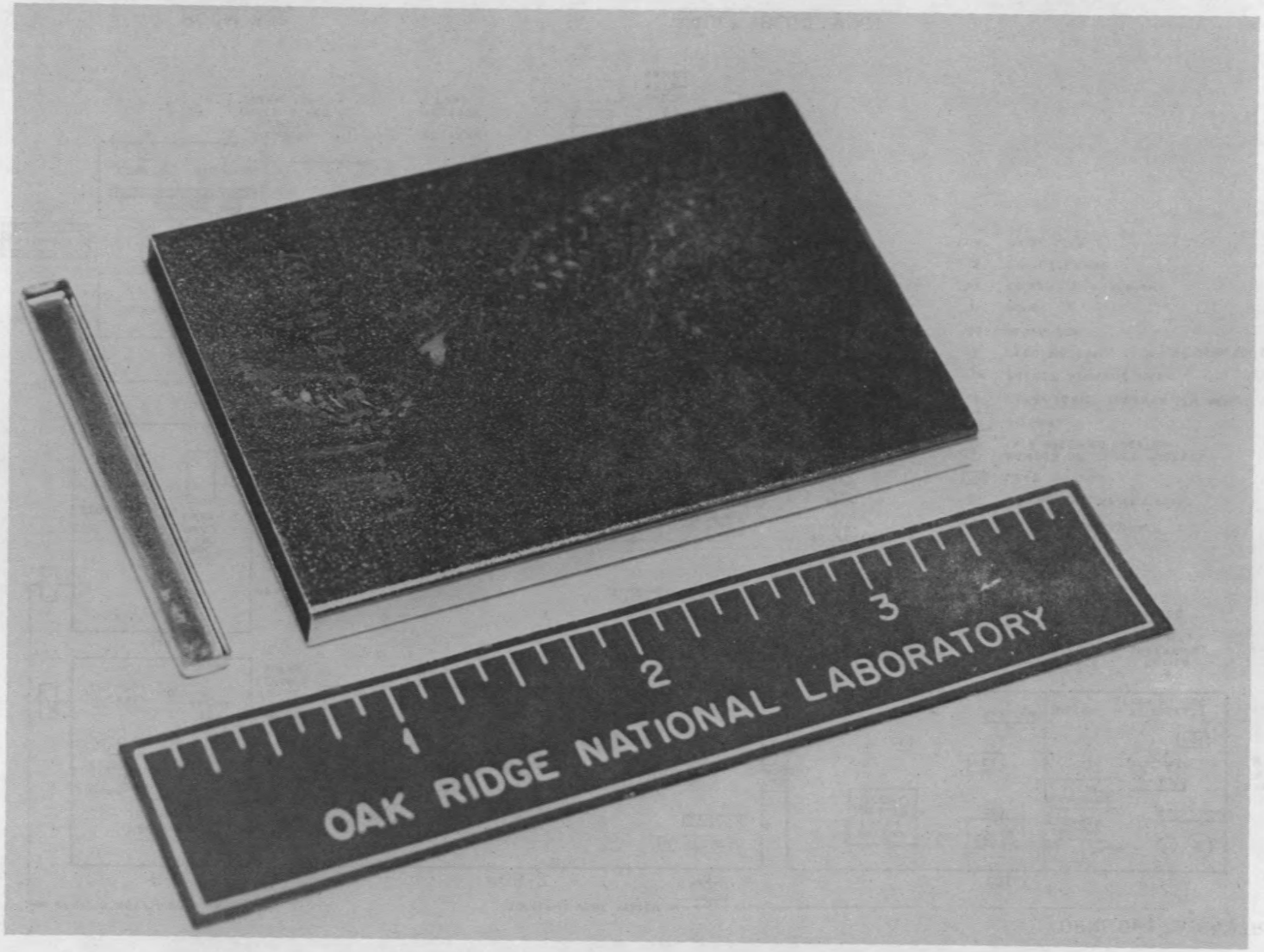


Fig. 2. Stainless steel packet.

ORNL Photo 1388-79

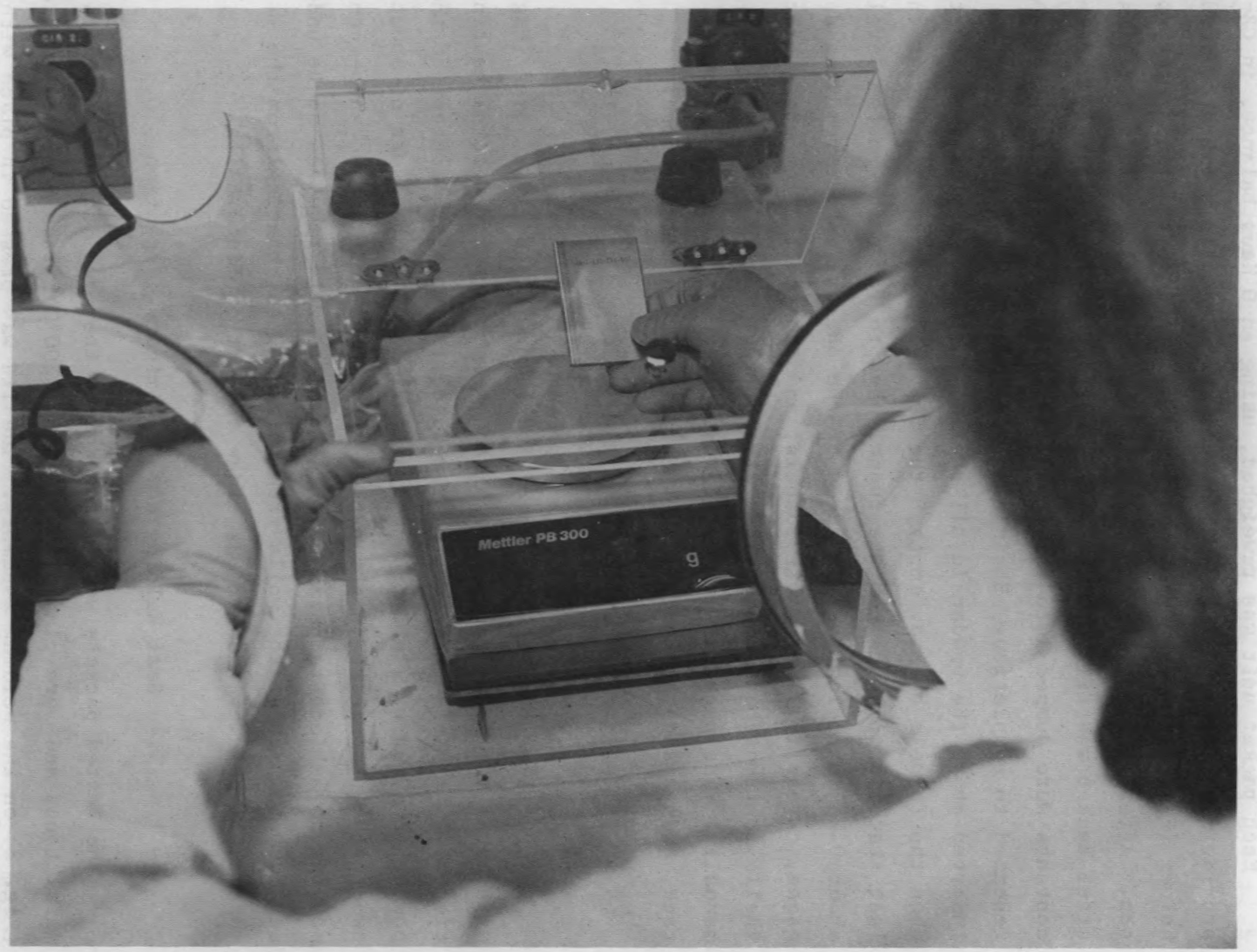


Fig. 3. Packet weighing.

## 5.2 Packet Charging

Each packet unit was reweighed, using an O'Haus balance, in GB-1 to provide a reference weight. The shell was placed in a vibrator feeder holder (Fig. 4), and the base of a funnel was inserted inside the open top. After four shells were placed in the holder, a tared stainless steel beaker was filled with 33 (±0.66) g of powder (Fig. 5), and the contents were dumped into the funnel above one shell. The operation was repeated to completion. Stainless steel depth gages (Fig. 6) were inserted above the powder in all shells, and the vibrator was actuated. When the funnels became "empty," the depth gages were used to jar the last traces of powder from the funnels and to force the powder levels to about 0.25 in. below the top edges of the shells. After removing depth gages, carefully lifting off funnels, and tapping the top edges of the shells to remove adhering powder, the correct packet lids were inserted manually. The packets were reweighed, placed in the packet storage rack, and passed through a rubber curtain to the welding area.

## 5.3 Packet Heating

The filled packets (groups of four) were placed in an oven (Fig. 7) with metal tongs, heated to 250°C, and held there for a total heating time of 1 h. This heat treatment reduced the moisture content of the powder to $<0.03$ wt % and produced a final internal pressure of about two-thirds atmosphere in the packet after seal welding and subsequent cooling to ambient temperature. The packets were required to be under a vacuum to prevent the walls from bulging when changing from the topographical elevation of Oak Ridge to that of Idaho Falls.

## 5.4 Seal Welding and Preliminary Inspection

The heated packets were removed from the oven individually with metal tongs and were placed in a heated (200°C) brass positioning block (Fig. 8) on the welding assembly. The lid was pressed in place with a metal bar such that its top edge was flush with the top of the shell body. Then, the welding torch tip was set above the indentation between

ORNL Photo 1390-79

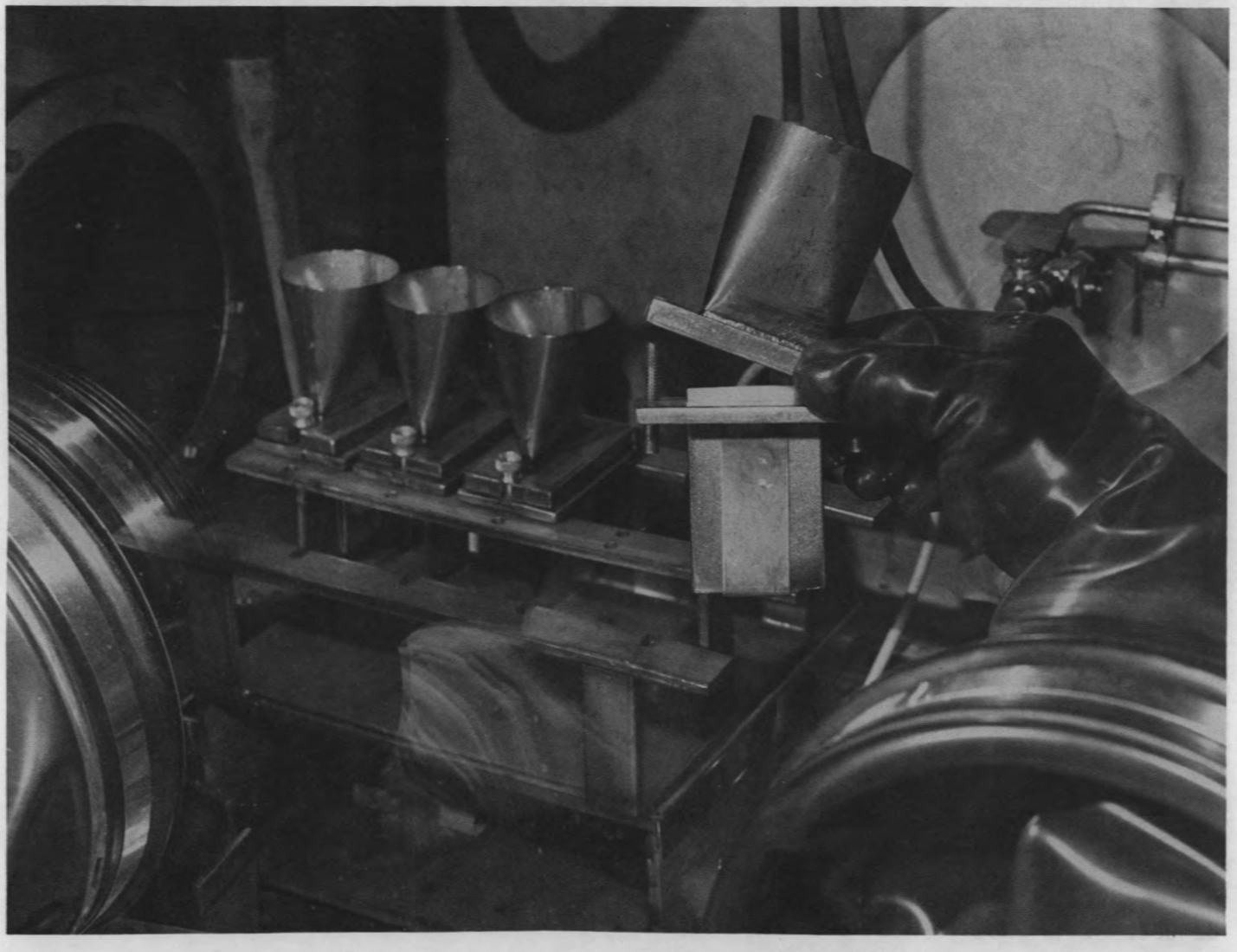

Fig. 4. Packet in holder with funnel.

ORNL Photo 1389-79

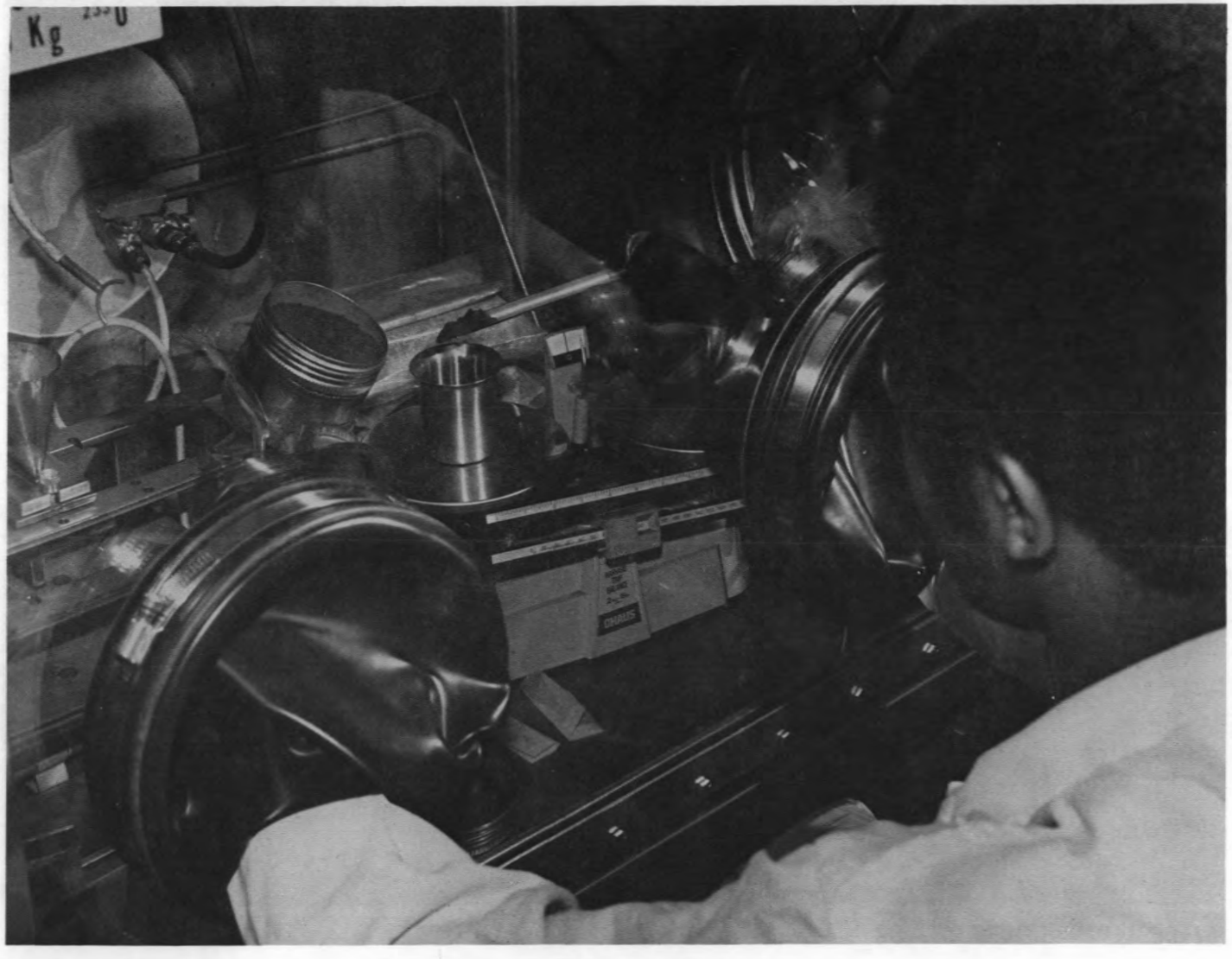


Fig. 5. Powder weighing.

ORNL Photo 1394-79

Fig. 6. Depth gage placement.

ORNL Photo 1396-79

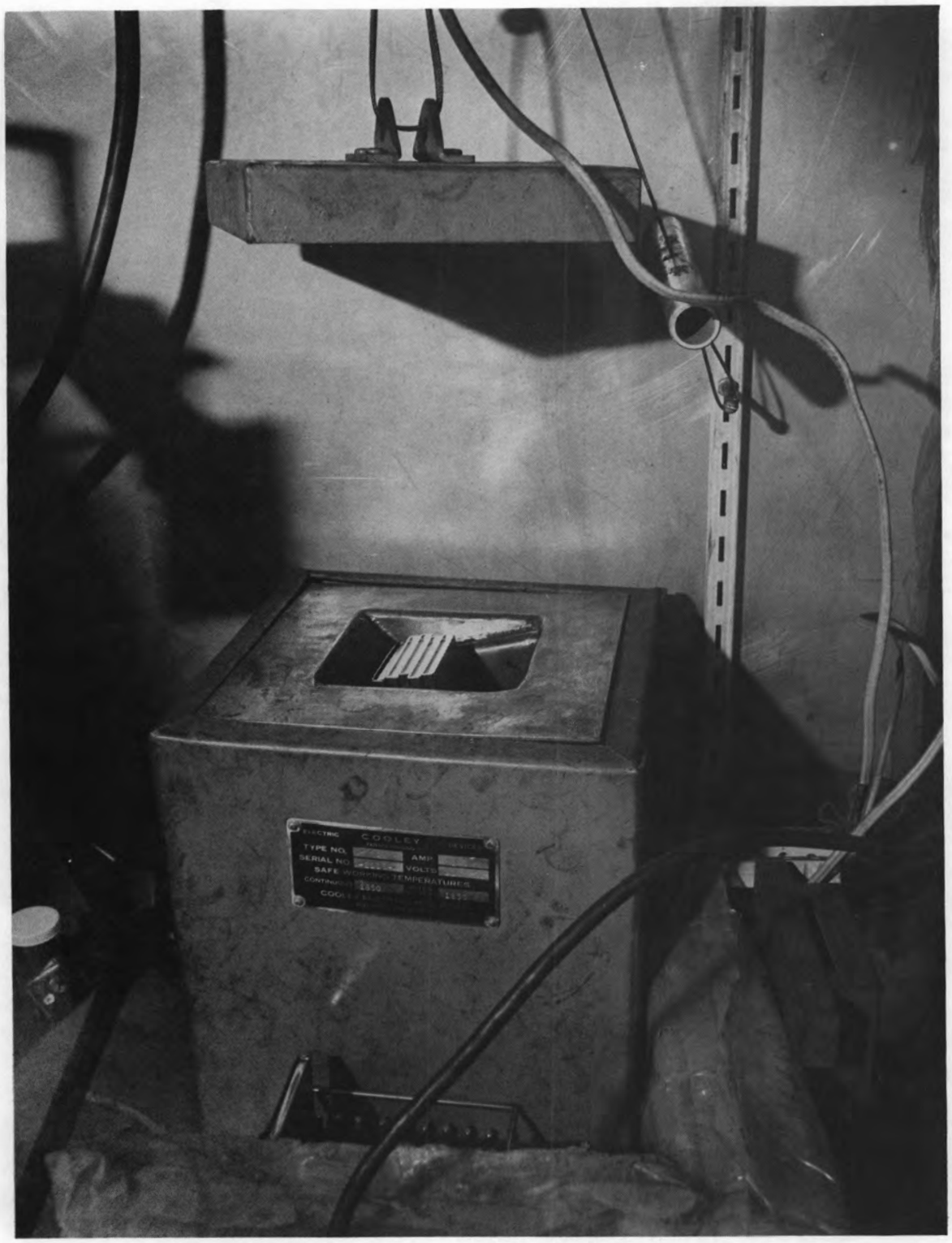


Fig. 7. Packet placement in oven.

ORNL Photo 0254-80

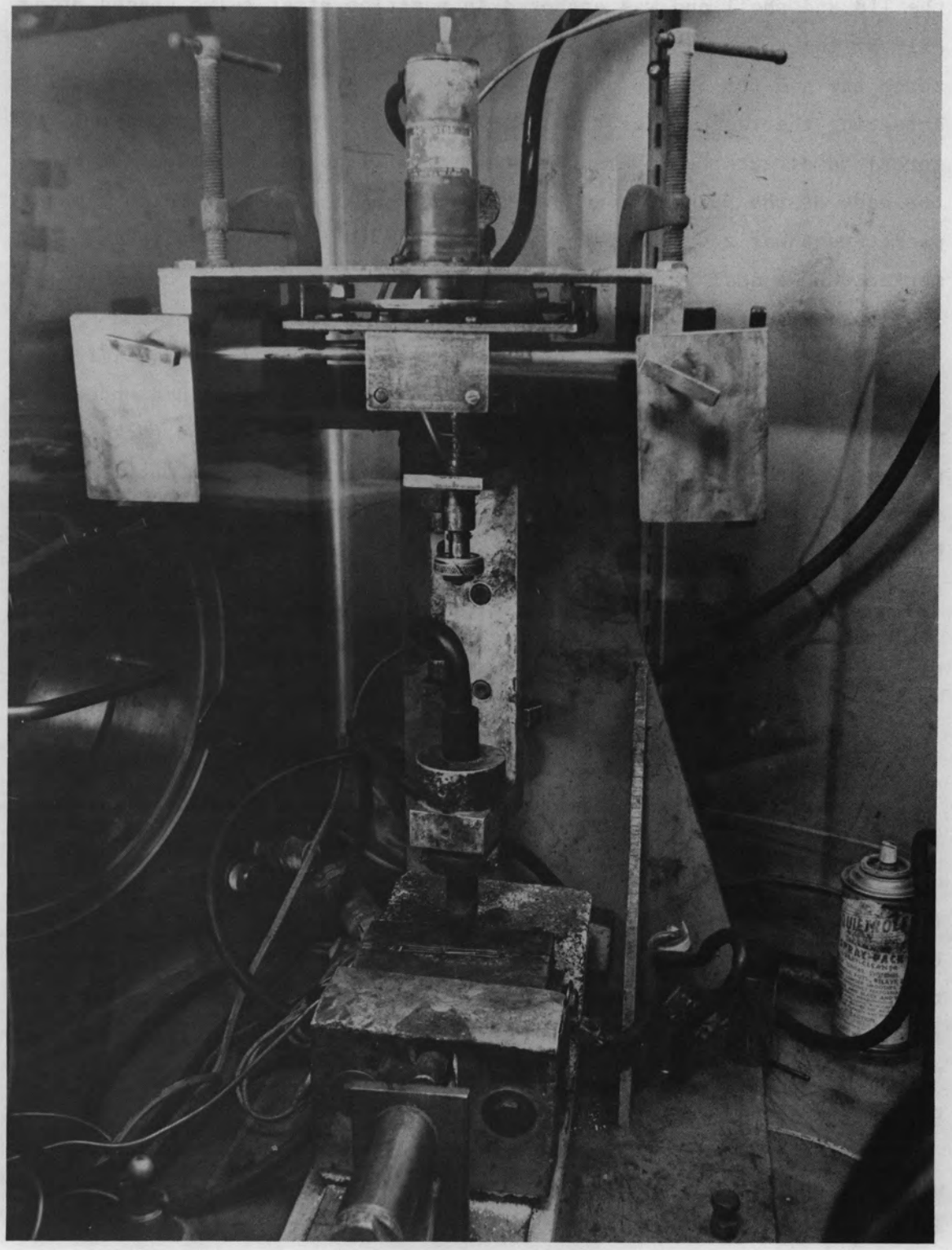

Fig. 8. Packet in welder positioning block.

the lid and shell and was anchored in position after being spaced properly by inserting a 0.38-mm (0.015-in.) shim in the air gap between torch tip and top of the packet (Fig. 9). A preliminary run was made by actuating the two cams of the torch tracking guide (with no power to the torch) to direct the movement of the torch along the perimeter of the top edge of the packet (see Appendix). When alignment of torch tip and packet edge was assured, power was supplied to the torch while in motion, and a seal weld was made on the packet.

On completion of the welding operation, the torch power and tracking unit were stopped, and the packet was removed for preliminary inspection. The weld was buffed to remove oxide and examined under a 4X magnifying glass. If a weld was visually unacceptable, the packet was passed by hand back to the feed can bag-in port and bagged out for storage and subsequent recycle. If it was acceptable, the packet was passed down an incline to GB-2 (Fig. 1) and stored in a packet storage rack.

The welding operation was repeated until all heated packets were processed. After two welds, the torch tip was replaced.

### 5.5 Leak Testing and Preliminary Decontamination

Leak testing was performed on initially accepted packets obtained from welding batches of four or eight units. One at a time, packets were leak tested by immersion into ethylene glycol in a glass vessel (Fig. 10) that was evacuated to -635 mm (-25 in.) Hg. If no gas bubbles rose from the weld area in 10 s (indicating an acceptable leak rate of $<1 \times 10^{-5}$ $cm^3/s$),[2] the vessel was vented, and the packet was removed, wiped dry (using cheesecloth), and placed in a rack in one of three ultrasonic cleaning baths (Fig. 11), containing 7 *M* $HNO_3$, for 16 to 20 h. Unaccepted packets were recycled.

After acid treatment, the packet surfaces were rinsed with water, wiped dry with absorbent tissue paper, and smeared with dry wiping paper as a check for alpha contamination. If the lab monitor, alpha (LMA), located over an opening in the top of GB-2, showed less than 1000 alpha

ORNL Photo 0255-80

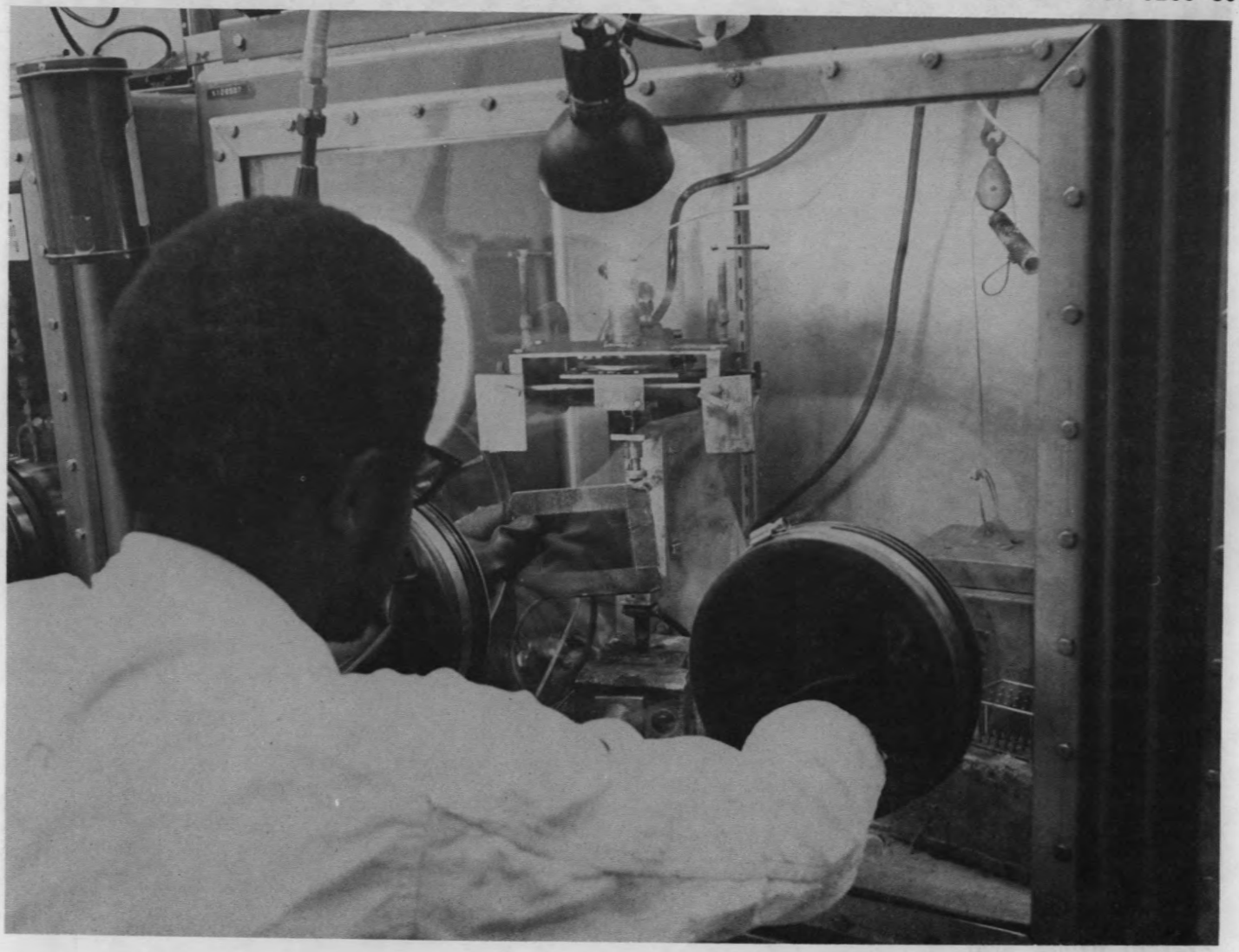

Fig. 9. Packet welding operation.

ORNL Photo 1391-79

Fig. 10. Packet leak testing.

ORNL Photo 1401-79

Fig. 11. Preliminary decontamination of packet.

dis/min per 100 $cm^2$ (initial acceptability), the packet was bagged out; if it showed excessive removable contamination, the packet was returned to the ultrasonic cleaner.

### 5.6 Decontamination of Packets and Uranium Accountability

Accepted packets leaving GB-2 were delivered to vented hood H-2 (Fig. 1). The sealed plastic bag containing the packets was opened, and each packet was checked thoroughly for removable alpha contamination by IS&AHP* personnel (Fig. 12). When acceptable, the packets were carried by hand to vented hood H-1 (Fig. 1) for weighing to determine the official net weight of powder in each (Fig. 3).

Those packets having acceptable weight were returned to H-2 for removal of excess weld, which contained fixed alpha contamination. Those few not meeting the weight specification were repackaged in plastic and stored for recycle.

Excess-weld removal was accomplished by sanding (Fig. 13) one packet at a time. That alpha contamination not removable by sanding was covered by nickel plate in H-1 using the electroless plating process (Fig. 14), following acid pickling. After sanding and each plating operation, each packet was weighed to determine the amount of nickel plate deposited.

The amount of nickel plate required was determined by measuring the amount of fixed alpha contamination present after each plating operation. A gas flow proportional counter (Fig. 15), owned by ANL, was used for this measurement. Occasionally, a leak was detected when counting the fixed contamination; it was caused by cutting too deeply into the weld area when sanding, thus allowing radon to escape. (Large leaks were detected by portable IS&AHP equipment after plating and before final counting.)

---

*Industrial Safety and Applied Health Physics.

ORNL Photo 1400-79

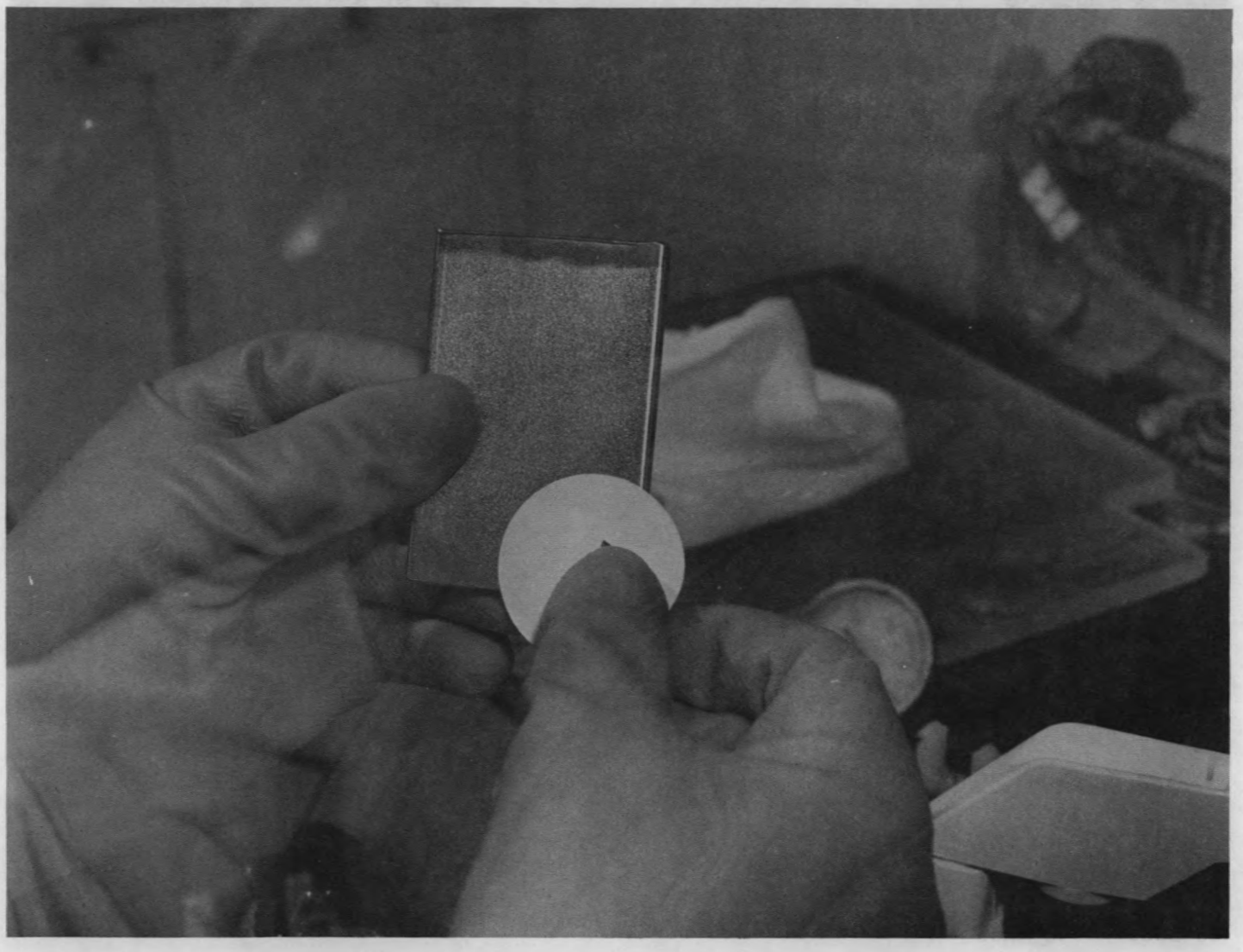

Fig. 12. Check for removable contamination.

ORNL Photo 0257-80

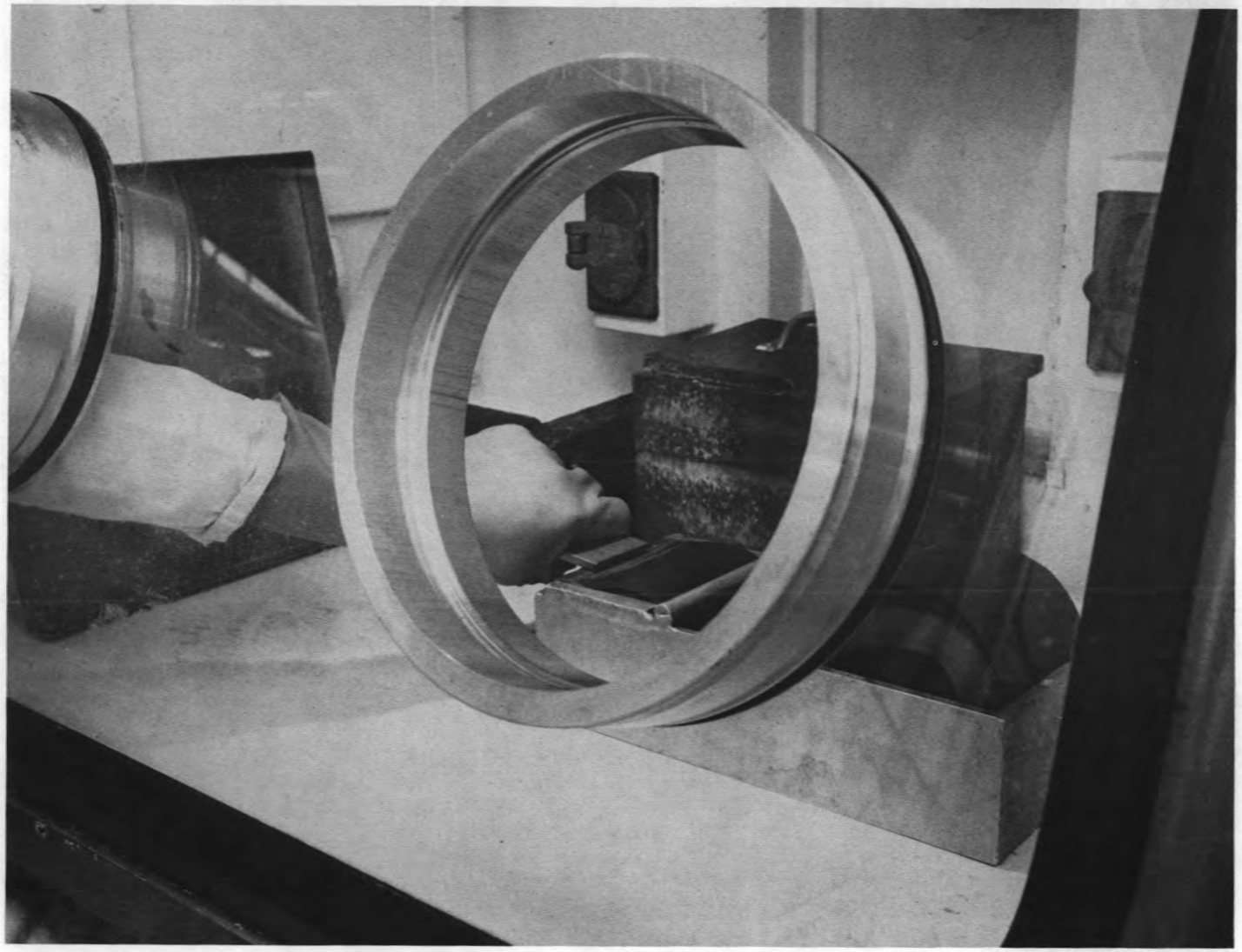

Fig. 13. Excess weld removing operation.

ORNL Photo 1399-79

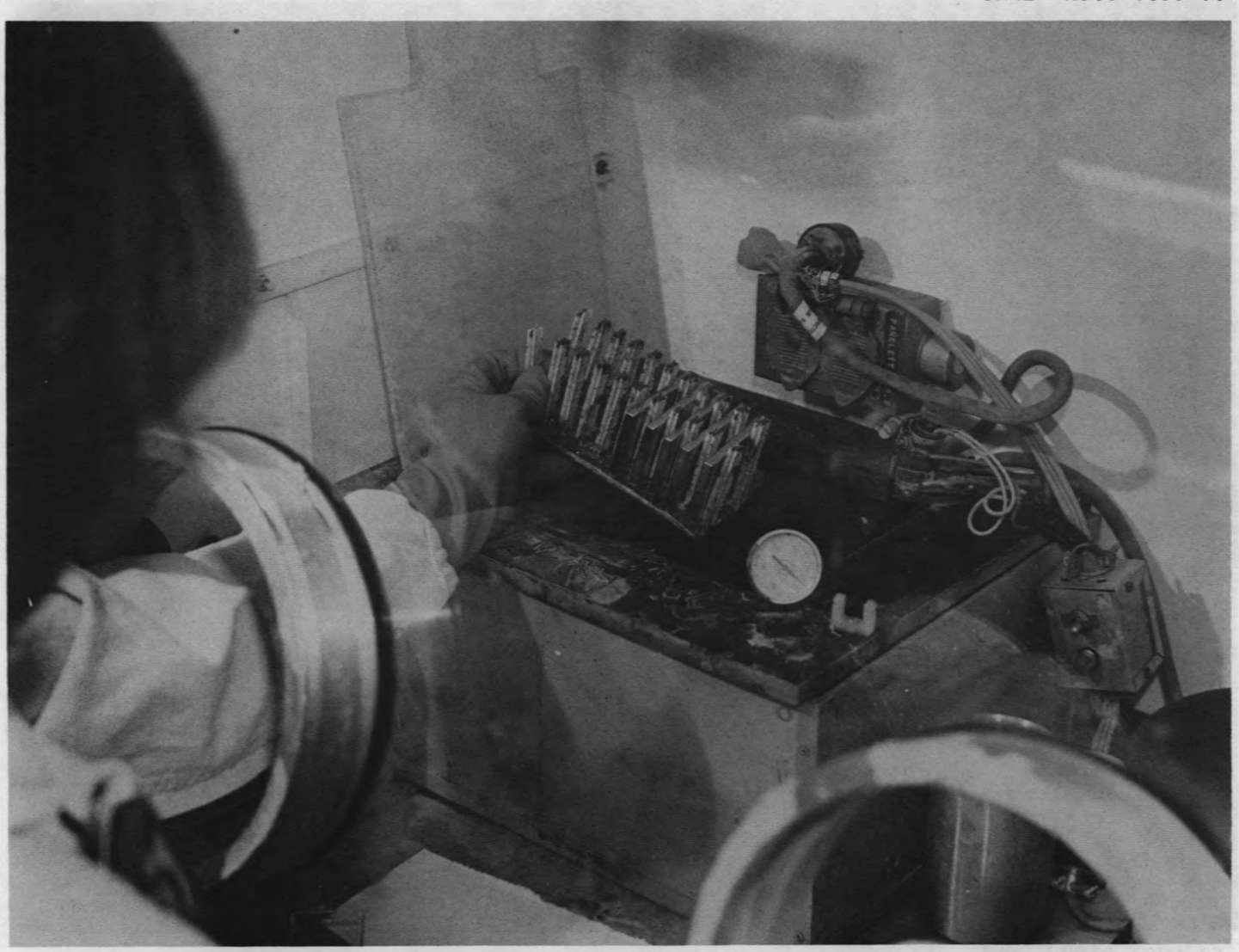

Fig. 14. Packet plating unit.

ORNL Photo 1384-79

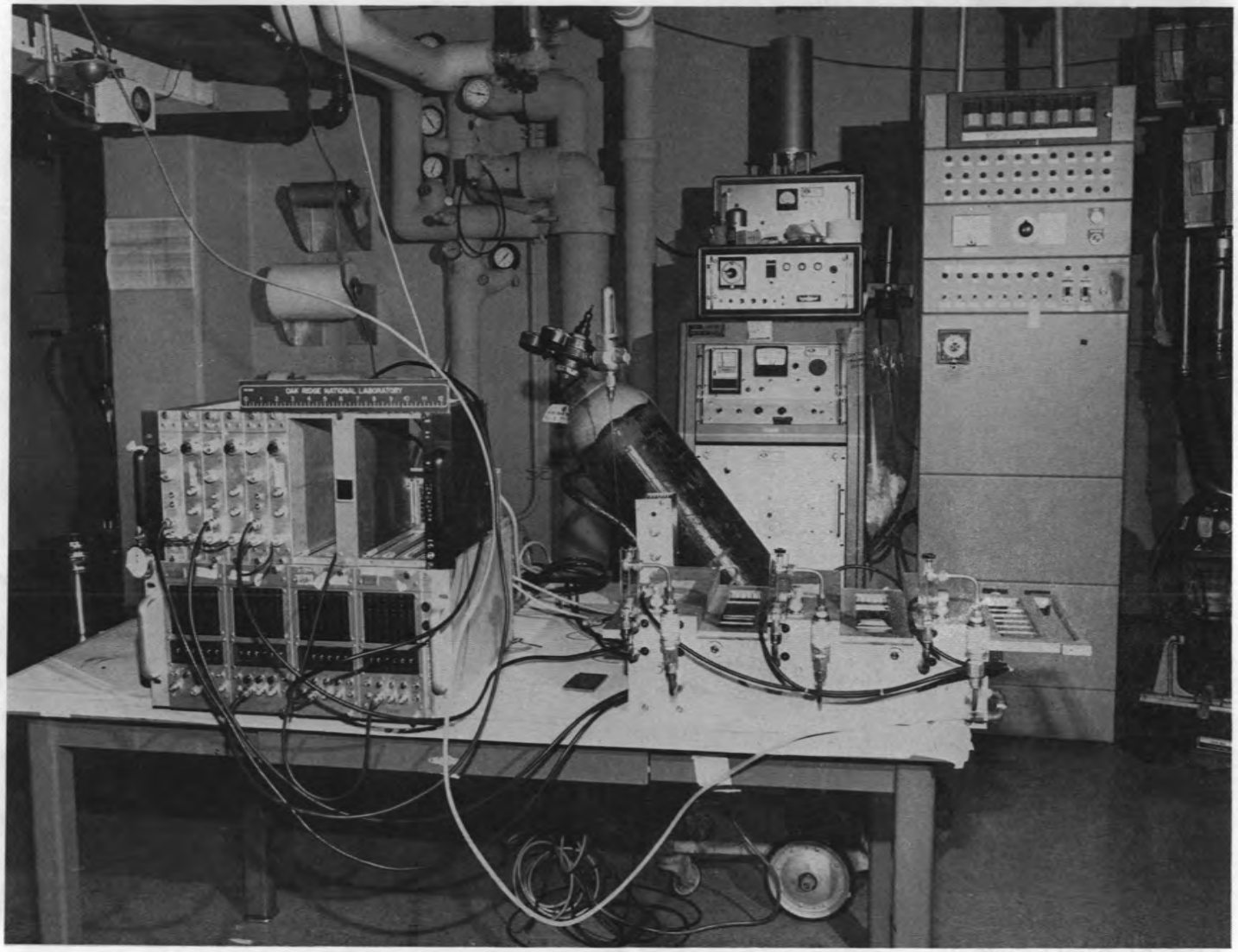


Fig. 15. Gas flow proportional counter.

## 5.7 Acceptance of Packets

### 5.7.1 Weight of powder

Packet powder weight was acceptable if it measured 33.0 g ± 2%.

### 5.7.2 Internal pressure

Packet internal pressure was acceptable when the unit was filled with powder and seal welded at 200 to 250°C, thus causing the internal pressure to be about two-thirds atmosphere when at ambient temperature at our elevation. The final test for internal pressure was made by checking the large faces of each packet for concavity by use of a straight edge with a light source on the opposite side from the viewer.

### 5.7.3 Moisture content of powder

Moisture content of the powder in the packets was acceptable if it was $<0.03$ wt %. Drying to this level was achieved by heating the powder to 250°C for 1 h.

### 5.7.4 Leak test

Packets were acceptable if their leak rates were less than $1 \times 10^{-5}$ $cm^3/s$.

### 5.7.5 Surface radioactivity

If the removable alpha contamination on the packets was $<30$ dis/min per 100 $cm^2$ and the fixed alpha contamination was $<300$ dis/min per 100 $cm^2$, the packets had acceptable levels of surface radioactivity.

### 5.7.6 Width and thickness

Packets were accepted if they passed freely through a go/no go gage having inner dimensions of 3.0 (length) x 2.000 x 0.250 in. (76.2 x 50.8 x 6.35 mm) (Fig. 16). Any that warped during heating and handling were straightened by squeezing in a vise or by anchoring one end in a vise

ORNL Photo 0251-80

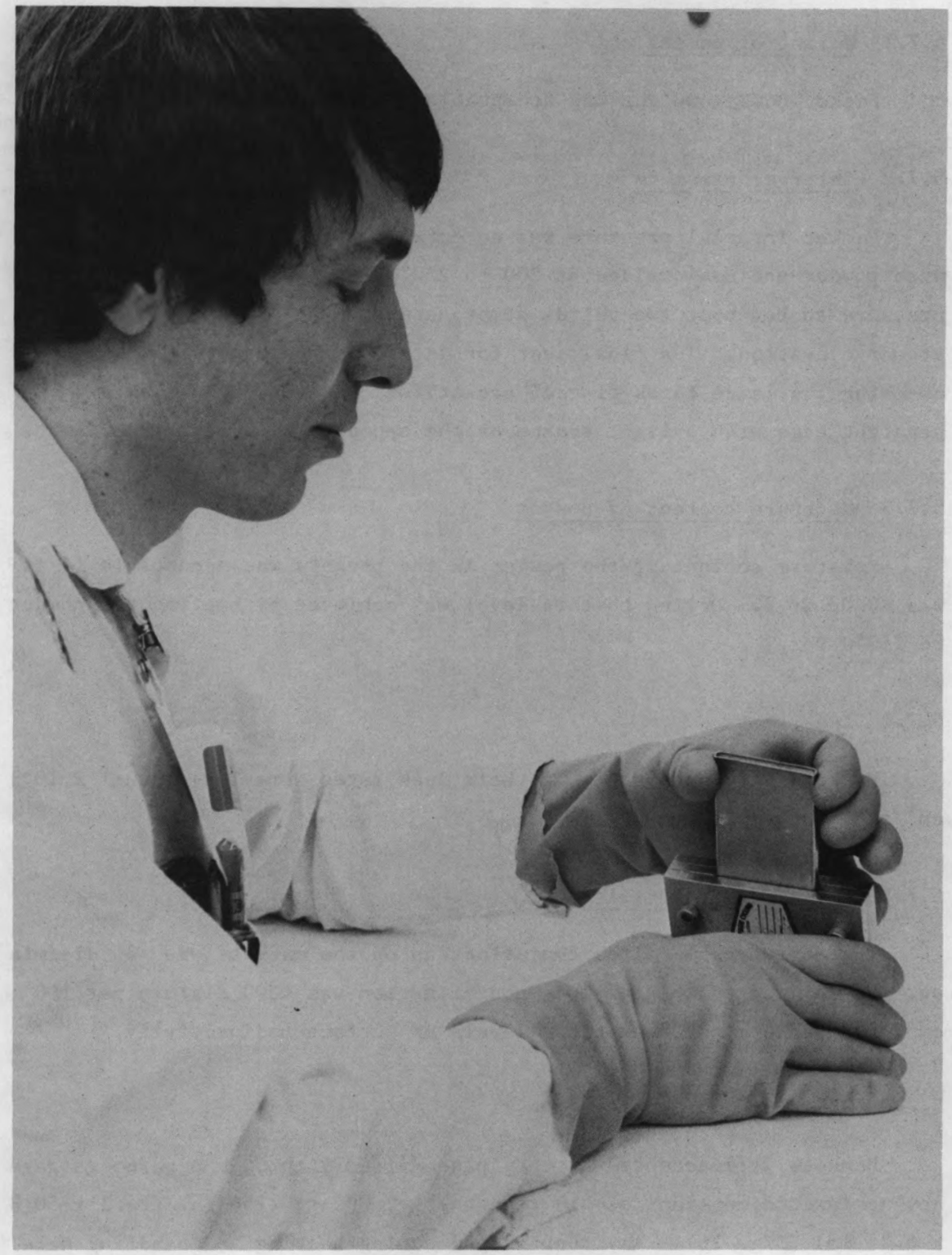

Fig. 16. Go/no go gage.

and applying hand pressure (Fig. 17). (Those, finally accepted, were rechecked for leaks before continuing tests.)

### 5.7.7 Length

Packets were accepted after measuring their lengths (Fig. 18). The original specification called for a length of 3.000 ± 0.001 in. (76.2 ± 0.025 mm), but most of the shells were found to be less than this, as received. All were shorter after welding because the weld melt flowed downward slightly due to gravity.

### 5.7.8 Surface flaws

Packet surfaces were examined for surface flaws and accepted if no dents nor scratches were found to be deeper than 0.0015 in. (0.038 mm) when compared visually with "standard" flaws.

## 5.8 Packet Identity

Each packet was given a unique identification number so that the history of all activities associated with that element could be examined at some future time if needed. A typical number was XXX-X-XXX-YYY-ZZZ, where ANL supplied the first seven numbers (X) to indicate that it contained $^{233}U$ and had a given length. The next three numbers (Y) were assigned by ORNL to indicate the $U_3O_8$ powder lot used in filling, and the final three (Z), also assigned by ORNL, indicated the unit number in the lot.

## 5.9 Packaging and Storing

All accepted packets were wrapped individually in aluminum foil and placed in a uniform pile of 25 units, each with a large face down, in an isotope shipping can (7 x 4.25 in. diam) (178 x 108 mm diam). The bottom, top, and side spaces were filled with crinkled aluminum foil to restrict movement of the packets. Filled cans were sealed and stored in "bird cages" approved for fissile materials in storage vault 3100.

ORNL Photo 0258-80

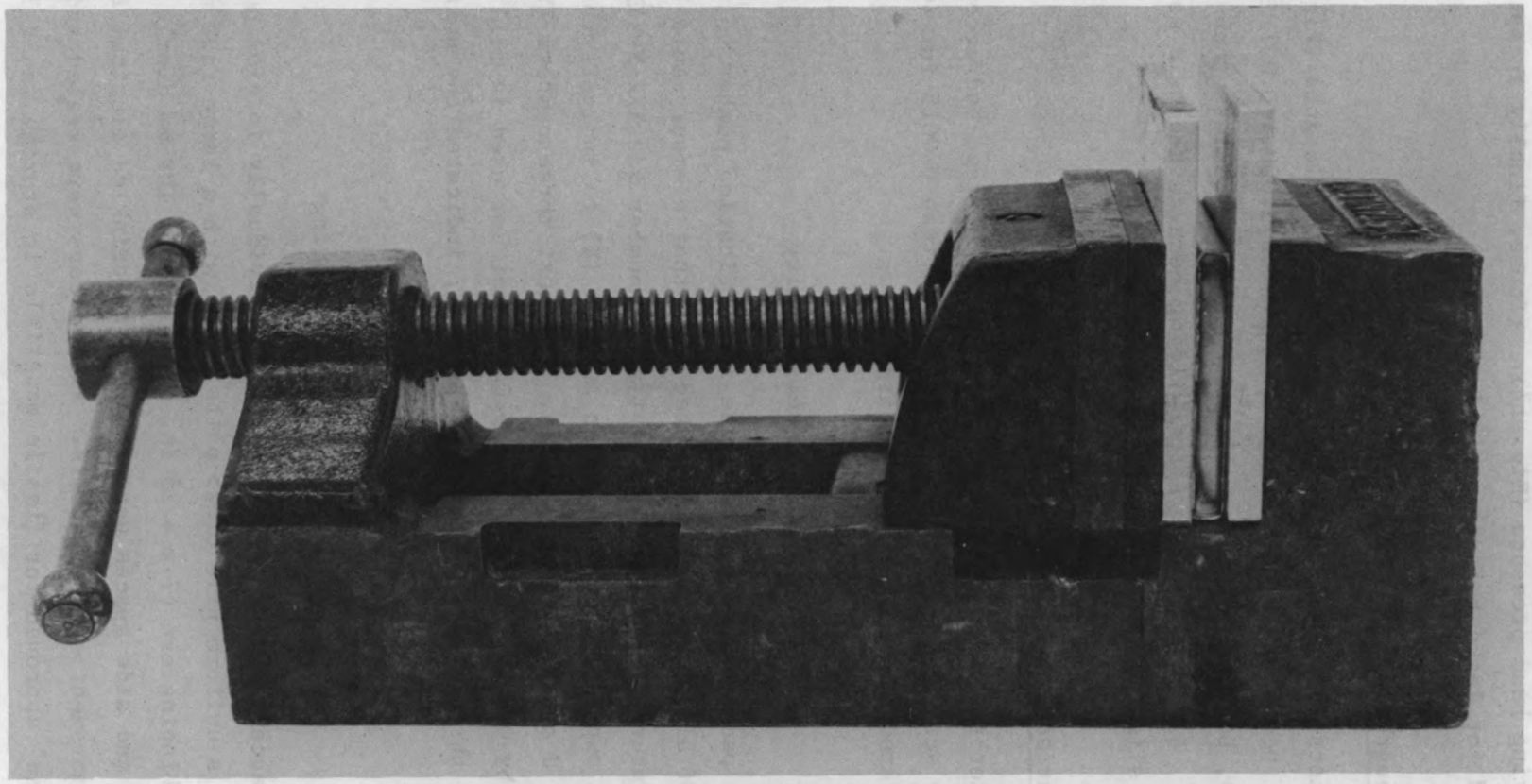

Fig. 17. Packet straightening vice.

ORNL Photo 1385-79

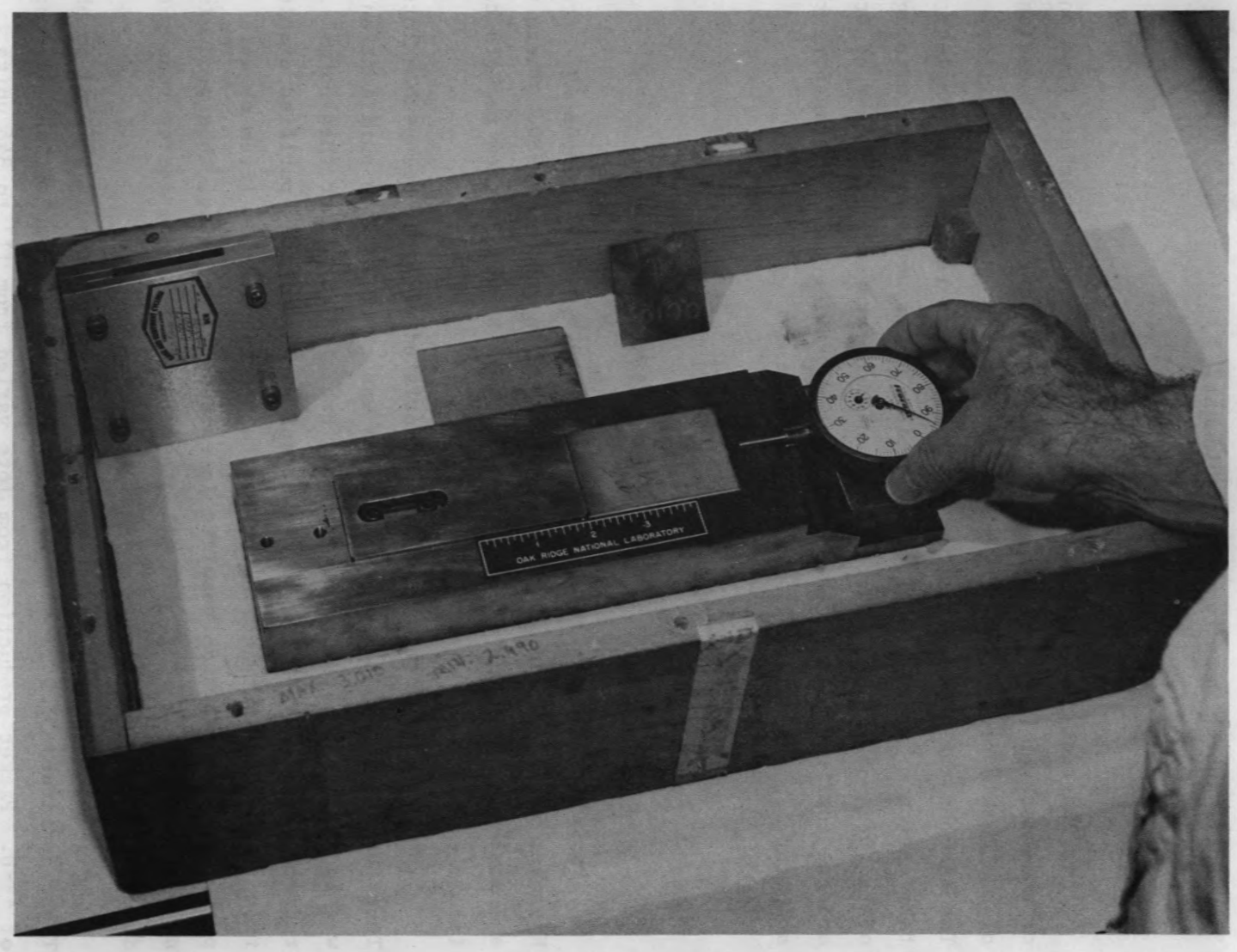


Fig. 18. Packet length determination.

When two isotope cans were filled and sealed, they were placed in a 6 M-type shipping drum [55 gal (208 L)], which was sealed and stored in 3100 until enough were ready for shipment.

### 5.10 Shipping

At the request of ANL, drums containing accepted packets from one or more lots of $U_3O_8$ were shipped by approved carrier. A lot consisted of one week's production of powder in the oxide conversion facility. The size of the lot was further set by the time required to complete the fabrication of packets because radiation background increased with age of the uranium. Also, age of the uranium determined the number of drums and the configuration of the array in the carrier used to transport the shipment.

## 6. FUEL ELEMENT PRODUCTION RESULTS

### 6.1 Production and Efficiency

Packet production time covered a 15-month period, ending in November 1979. The final shipment was made in February 1980. There was a 2-month delay in the middle of the program because no new packets came into the plant.

The oxide production operation consisted of eight acceptable lots. There were three false starts; one run was canceled when purification was incomplete and the product powder exhibited a higher than normal radiation background; and on two occasions the freshly purified uranium from the solvent extraction runs contained high carbon (from organic phase carry-over) which resulted in excessive sintering, thus producing a higher density powder. In all other respects, these latter runs produced acceptable powder.

A total of 1743 acceptable packets was produced and shipped to ANL. These contained 57.5 kg of $U_3O_8$, 48.7 kg of total uranium, and 47.7 kg of $^{233}U$. Packet production from lots varied from 117 to 346 units depending primarily on welding efficiency.

Production efficiency of accepted packets was 70.1% of the packets handled. The rejects consisted of 658 failures due to faulty welding (26.5%) and 84 due to excessive sanding (to remove surface contamination), dents, or deep scratches (3.4%).

Welding efficiency ranged from 55% at the beginning to 88% at the end of the program. Causes of unacceptable welds were (1) malfunction of welding controls, overheating, and underheating; (2) loosening of guide cams and misalignment of the welding tip with the work area; (3) outgasing of the packet at final weld closure caused by heating of the filled packet in the welder; and (4) slag on the weld work area. Packet production data for the lots involved appear in Fig. 19.

## 6.2 Uranium Material Balance

There was 83.6 kg of uranium of acceptable isotopic and chemical purity available for the program. At the completion of the job, 83.3 kg of uranium was accounted for; this was 99.64% of the source material. A complete material balance appears in Table 1. The remaining 0.36% is probably held on tank and boron-glass ring surfaces or appears as a loss due to measuring uncertainties.

## 6.3 Quality Assurance

ORNL was required to maintain a QA program for the ANL-ZPR assistance project. This included the requirements relating to the source feed material (left over from a previous project[1]), powder manufacturing processes, packet fabrication processes, operating procedures, identification, and process controls. Also, necessary approvals, quality control plans, inspections, qualifications, test results, records, records handling and retention, sampling plans, and certification were described. Requirements related to packaging and shipping the packets were included.

Analyses of the product $U_3O_8$ powder, before use in fabricating packets, are shown in Tables 2, 3, and 4. Inspection of the fabricated packets consisted of checking the specifications shown in Table 5.

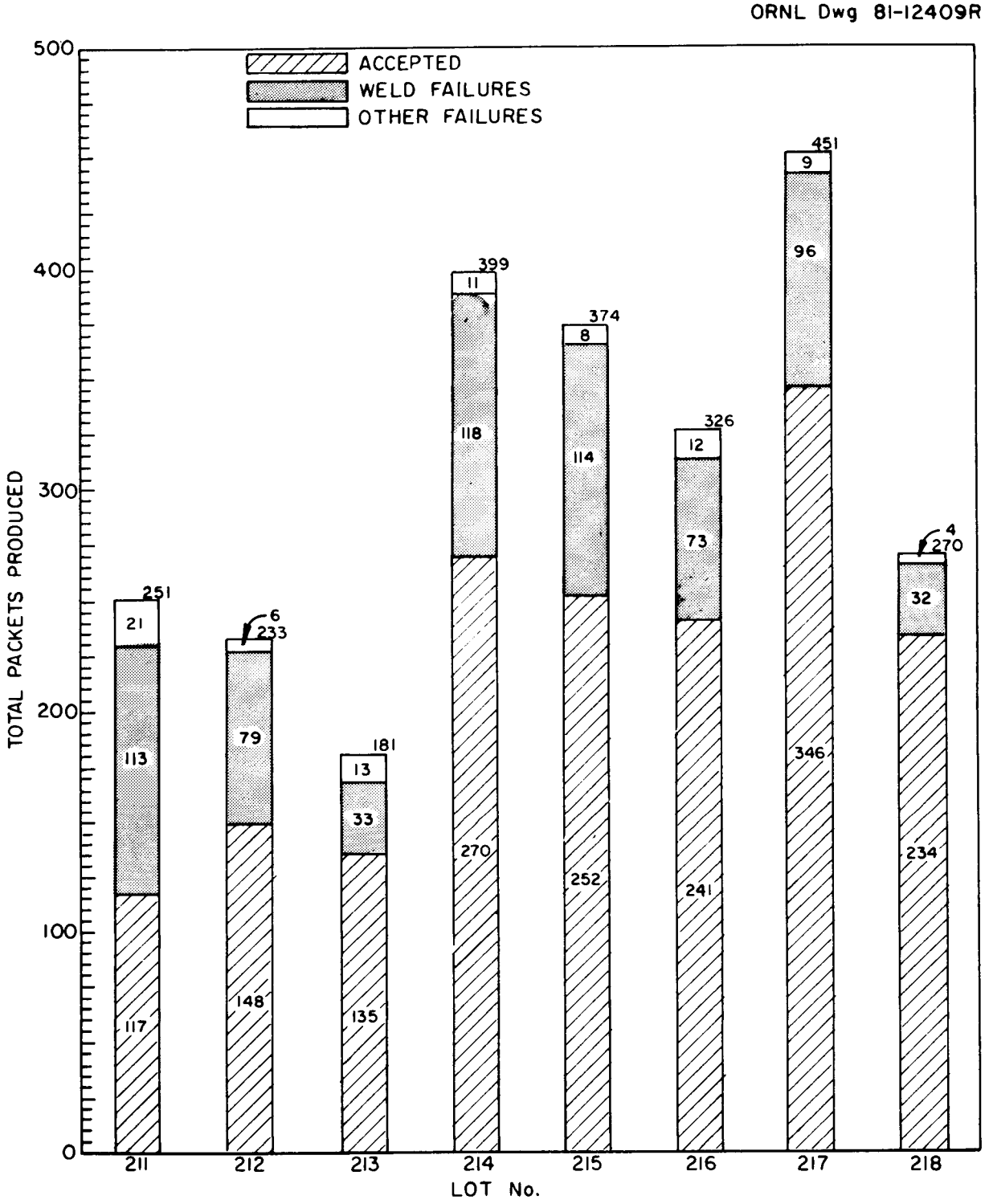


Fig. 19. Packet production data for ANL-ZPR program.

Table 1. Uranium material balance for the ANL-ZPR program
(Uranium available for use in this program)

| | | Total U (kg) | $^{233}U$ (kg) |
|---|---|---|---|
| 1. | Initial inventory (available for use in this program) | | |
| | a. Liquid (UNH in U-storage) | 55.963 | 54.886 |
| | Liquid ("In-process" tanks) | 9.472 | 9.285 |
| | b. Solids (as oxides) in storage | 18.197 | 17.835 |
| | Total to account for | 83.632 | 82.006 |
| 2. | Shipments out | | |
| | a. ANL-ZPR (Idaho) | 48.690 | 47.722 |
| | b. Approved transfer to other programs | 2.699 | 2.646 |
| | Total shipped | 51.389 | 50.368 |
| 3. | Waste discards | | |
| | a. From solvent extraction, ion exchange, and analytical facility | 0.521 | 0.511 |
| | b. From oxide conversion line | 0.293 | 0.287 |
| | Total measured losses | 0.814 | 0.798 |
| 4. | Remaining inventory | | |
| | a. Recycle oxide from program | 5.367 | 5.262 |
| | b. Unused oxide | 5.086 | 4.991 |
| | c. UNH solution in U-storage | 18.740 | 18.397 |
| | d. "In-process" tanks | 1.724 | 1.688 |
| | e. Archive samples (oxide) | 0.215 | 0.211 |
| | Total remaining | 31.132 | 30.549 |
| 5. | Total accounted for (items 2, 3, 4) | 83.335 | 81.715 |
| 6. | Difference (item 1 minus item 5) | 0.297 | 0.291 |
| | (% unaccounted for) | 0.36 | 0.36 |

Table 2. Inspection of $^{233}U_3O_8$ powder

| Inspection analysis | Specification | Average of eight lots |
|---|---|---|
| Uranium content | >84.0 wt % | 84.48 wt % |
| Uranium isotopic content | See table 3 | |
| Impurities | See table 4 | |
| Oxygen/uranium, atom ratio | 2.7 ± 0.1 | 2.672 |
| Moisture | <0.03 wt % at 200 ± 10°C (determined by measuring moisture released when heated from 200 to 1000°C) | 0.018 wt % |

Table 3. Uranium isotopic specifications for $^{233}U_3O_8$ powder

| | Concentration (total U basis), wt % | |
|---|---|---|
| Isotope | Specification | Average of eight lots |
| 232 | <10[a] | 7.3[a] |
| 233 | >97.0 | 98.01 |
| 234 | <2.5 | 1.198 |
| 235 | <0.5 | 0.082 |
| 236 | <0.1 | 0.018 |
| 238 | <1.0 | 0.688 |

[a]Parts per million.

Table 4. Impurities in $^{233}U_3O_8$ powder[a]

| Impurity | Specification (maximum) (ppm U) | Average of eight lots (ppm U) |
|---|---|---|
| Al | 300 | 314[b] |
| B | 3 | 1.5 |
| C | 500 | 26 |
| Ca | 50 | 13 |
| Cl + Br | 25 | 16 |
| Co | 15 | 1 |
| Cr | 100 | 15 |
| Cu | 40 | 3 |
| F | 30 | 2 |
| Fe | 400 | 79 |
| Mg | 100 | 2 |
| Mn | 20 | 2 |
| Mo | 100 | 3 |
| N | 50 | 6 |
| Ni | 200 | 8 |
| P | 500 | 319 |
| S | 75 | 30 |
| Si | 200 | 82 |
| Th | 500 | 13 |
| Ti | 20 | 1 |
| V | 50 | 0.4 |
| $^{239}Pu$ | 25 | 11 |
| As[a] | | 0.6 |
| Cd[a] | | 10 |
| Dy[a] | | ⩽3 |
| Eu[a] | | ⩽3 |
| Gd[a] | | ⩽3 |
| K[a] | | 8 |
| Na[a] | | 7 |
| Pb[a] | | 2 |
| Sm[a] | | ⩽4 |
| Zn[a] | | 5 |
| Zr[a] | | 4 |

[a]In addition, any detectable quantities of impurities of the refractory metal group or the rare-earth group shall be reported with no specification of maximum concentration.
[b]Accepted by ANL.

Table 5. Packet specifications

| Inspection item | Specification |
|---|---|
| Identification number | 13 digits |
| Net weight of powder | 33.0 g (±2 wt %) |
| Depth of dents and scratches | ≤0.0015 in. |
| Internal pressure | ≤2/3 atmosphere at ORNL |
| Leak rate of packet | $\leq 1 \times 10^{-5}$ $cm^3/s$ |
| Moisture content | ≤0.03 wt % |
| Surface contamination (alpha) | |
| Transferable | ≤30 dis/min per 100 $cm^2$ |
| Fixed | ≤300 dis/min per 100 $cm^2$ |
| Length | 3.0 ± 0.001 in.[a] |
| Straightness | Pass freely through go/no go gage |

[a]Rescinded when packets were found to be less than above, as received.

## 7. SCRAP RECOVERY

All rejected packets, collected spilled powder, and powder aged until its radiation background was excessive were stored in vault 3100 until the work load was such that uranium recovery could be done. Recycling consisted of (1) cutting the tops of reject packets (Fig. 20) and dumping the contents down the chute into the oxide dissolver and (2) dumping other powder from screw-top storage cans into the same chute. The oxide was dissolved in slightly more than the stoichiometric amount of $HNO_3$ so that the product was only slightly acidic; this product solution was stored for future use or was purified by ion exchange and reconverted to $U_3O_8$ powder immediately.

Any uranium-bearing solutions ($\geq$0.1 g U/L), collected in the conversion line, were transferred to the solvent extraction system for recycle. All solutions containing <0.1 g U/L were transferred to the ORNL intermediate-level waste (ILW) system.

## 8. WASTE MANAGEMENT

Emptied packet hulls were bagged out of the dissolver charging box and stored in a 55-gal (208-L) stainless steel drum. Contaminated rags, paper, plastic, and rubber were placed in clean plastic bags and stored in the above-mentioned drums. When a drum was full and sealed, it was scanned by a nondestructive assay method based on a scintillation technique and compared with a standard to determine the amount of $^{233}U$ present.[3] The drum was finally stored above ground at the ORNL burial site.

## 9. EQUIPMENT PERFORMANCE

Equipment enclosures. The equipment was housed in two glove-ported stainless steel enclosures and two mild steel glove boxes modified for use as fume hoods. The two stainless steel enclosures were interconnected with a pass-through port; a partition in the first enclosure isolated the weighing and compacting equipment from the welding and tracking mechanisms, thus reducing the dusting conditions around these

ORNL Photo 0250-80

Fig. 20. Reject packet opening operation.

mechanisms. Each stainless enclosure was vented through a flame resistor prior to passage through an absolute filter into the alpha ventilation system. Absolute filters on the inlet ventilation nozzles prevented the release of contamination in the event of a flow reversal. The pressure differential relative to the room was controlled with a hand-operated butterfly valve. The windows were 0.25-in. (6.35-mm) annealed, laminated safety plate glass, and none were broken during the campaign.

The two mild steel glove boxes were painted with an acid-resistant coating to reduce corrosion. The glove ports in the 0.25-in. (6.35-mm) annealed, laminated glass windows were left open to ease operation and to ensure sufficient air velocity for the enclosures to function as ORNL-approved hoods. The 6-ft (1.8-m) enclosure (H-1) that housed the weighing and nickel-plating equipment was ventilated through the room ventilation system into the cell ventilation system. The 3-ft (0.9-m) enclosure (H-2), which was used to remove packet surface contamination by filing the packet welds smooth, was ventilated through an absolute filter into the alpha ventilation system. All of the enclosures were salvaged from prior programs at ORNL and modified for ease of maintenance and comfort of operating personnel.

Vacuum pumps. Two types of vacuum pumps were used. A Welch oil-sealed sliding vane vacuum pump generated the necessary vacuum for the packet leak detection system. It was selected for this service because the oil-lubricated vanes have a longer service life than the oilless type. The pump was located outside of the enclosures because oil fumes could not be tolerated in the enclosures. The pump exhaust flowed through a cotton fiber filter before being discharged to the cell ventilation system. The pump performed for the duration of the program without a malfunction.

A Neptune "Dyna Vac" pump supplied the vacuum and pressure for transferring solutions between the vessels and out of the enclosures into the waste system. This small, compact oilless pump had an oscillating flexible diaphragm and a small disc in the inlet and outlet ports that functioned as check valves. An appropriate piping arrangement

permitted the pump to evacuate or pressurize a vessel for transferring solution either into or out of it. The pump was reliable and durable; however, the corrosive vapors of the acidic packet decontamination solution caused a diaphragm failure near the end of the program. A new pump was installed because the cost to repair the contaminated pump was more than the cost to replace it.

## 10. NUCLEAR SAFETY

The nuclear safety of the facility was ensured through the use of engineered systems of safe geometry, restricted volume, and fixed neutron poisons. Also, we relied on administrative procedures that restricted both total fissile mass and fissile element concentrations. In our solvent extraction head-end vessels, a soluble neutron absorber was used. A nuclear safety analysis for all operations was documented.[4,5] Operation of the system was reviewed and approved by the ORNL Criticality Safety Review and the Radioactive Operations Review committees.

## 11. RADIATION EXPOSURES

Freshly purified $^{233}UO_2(NO_3)_2$ solutions exhibited low levels of radioactivity because the $^{228}Th$ content, and thus, succeeding $^{232}U$ decay daughters, was removed. Approximately 4 d after purification, the radiation level began to increase and continued to do so with time. Thus, personnel radiation exposure was directly dependent on the age (after purification) of the uranium being processed.

Purification processes (solvent extraction and ion exchange) were conducted remotely in shielded cells, which minimized radiation exposure to personnel. Oxide conversion, most packet charging and handling operations, recycle solids (dissolver) charging, and waste handling were done in unshielded equipment, resulting in radiation exposures depending on age of the uranium.

Average personnel whole-body doses of radiation during the ANL-ZPR program ranged from 339 to 703 mrem per quarter depending on the work load. Most of the exposure occurred during packet fabrication and

handling of reject packets while charging the dissolver because these uranium oxide powders had the greatest age since purification (Fig. 21).

Exposure experience is shown in Fig. 22. The low value in the middle of the program was caused by a shortage of new packet shells and thus, a reduction in work load.

Hand exposure to radiation varied from 100 mrem per oxide conversion lot (one week's handling of freshly purified uranium) to 300 mrem per two-batch (one day's) charging of aged (>6 months since purification) uranium as oxide in rejected packets.

Excessive exposure to any one person was controlled by close monitoring and by rotating people on the various jobs.

## 12. ACKNOWLEDGMENTS

We wish to thank J. M. Leitnaker of the Metals and Ceramics Division for his assistance in determining the operating parameters required to produce an acceptable $U_3O_8$ powder for the fuel elements. We also thank C. D. Watson for suggestions on preliminary cleaning and polishing of the stainless steel packet shells before filling.

We also wish to commend those members of the Analytical Chemistry Division, under the direction of J. H. Cooper, W. A. Laing, J. C. Price, and J. A. Carter, who were instrumental in developing analytical procedures and in conducting the many analyses required.

Greatly appreciated are the efforts of members of the Industrial Safety and Applied Health Physics Division, under the direction of C. H. Miller (M. L. Conner and W. A. McLoud), in monitoring the health and safety aspects of the facility and in obtaining contamination and radiation data required for acceptance of the fabricated fuel elements.

The greater contributions were made by the process supervisors and the engineering technicians who operated the various parts of the plant over a 15-month period without an operating mishap. The process supervisors were F. L. Daley, W. A. Lindsey, C. W. Martin, and W. A. Shannon. The engineering technicians were C. W. Boatman, J. M. Butler, A. L. Johnson, R. F. Kirk, O. W. Scates, and B. W. Starnes.

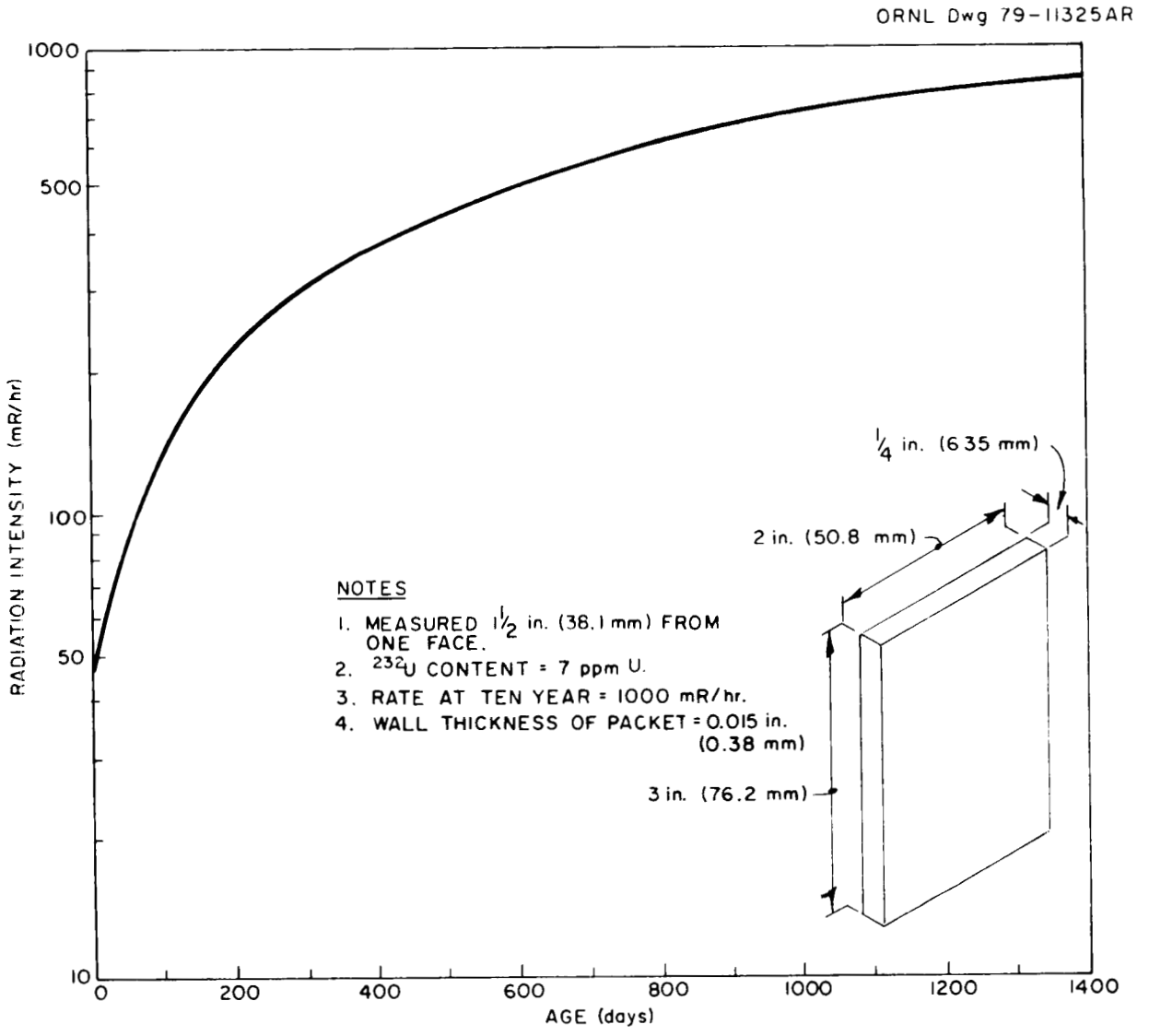


Fig. 21. Radiation intensity from a SS packet containing 33 g of $^{233}U_3O_8$ powder.

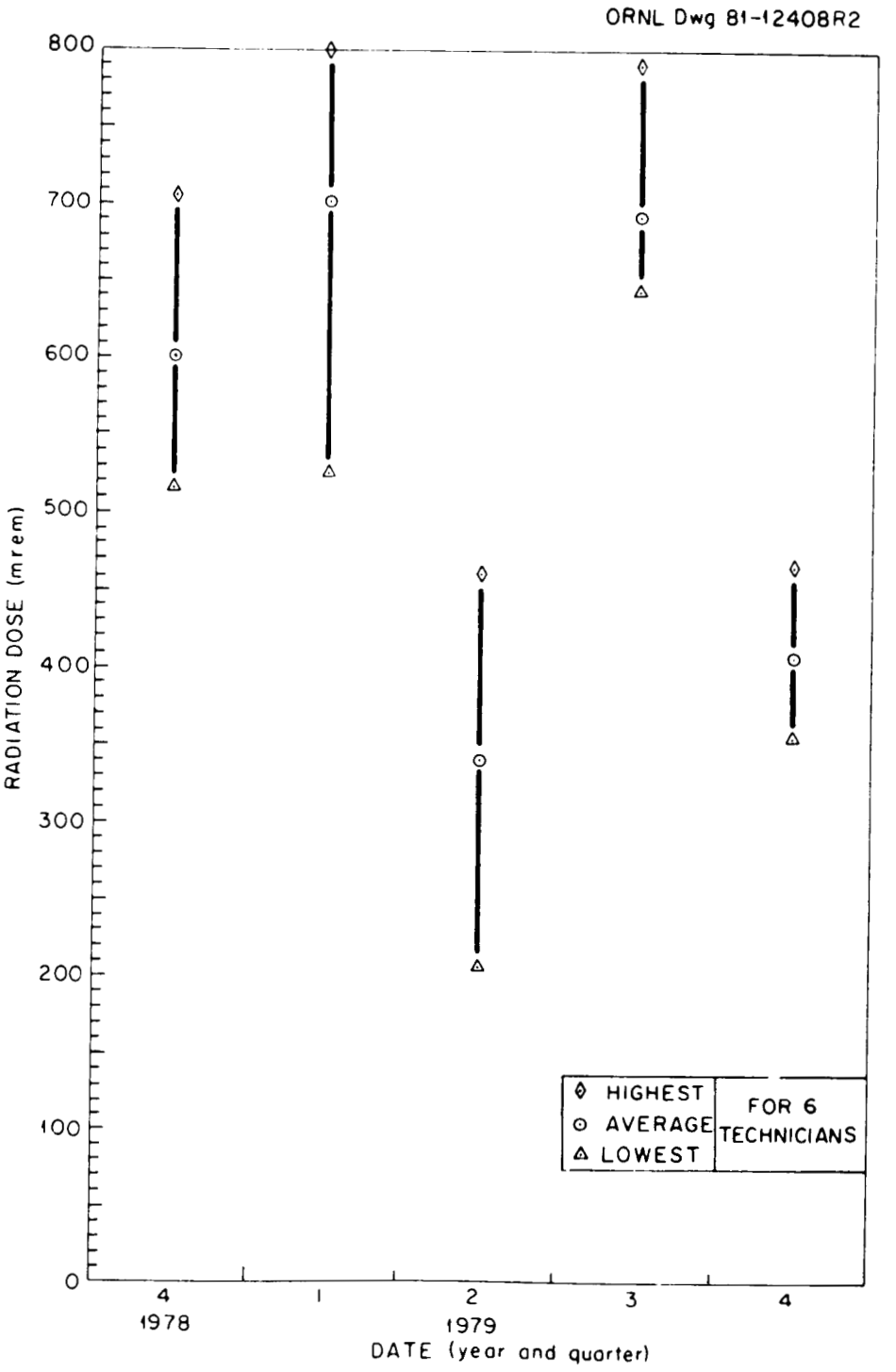


Fig. 22. Quarterly radiation exposure to technicians during ANL-ZPR program.

D. M. Helton maintained the uranium accountability records for the program, and R. B. Waters prepared operating flow sheets and engineering drawings. Both had much to do with making the program a success.

Special thanks are due G. E. Pierce, C. G. Shorter, and the capable, skilled craftsmen of the Plant and Equipment Division for their efforts in maintaining the process equipment. Gratitude is also expressed to A. A. Shourbaji, C. Allen, and technicians of the Instrumentation and Controls Division for their contributions in maintaining the accuracy and reliability of process instrumentation.

## 13. REFERENCES

1. R. W. Horton et al., Safety Analysis: LWBR Support Program in Building 3019 Pilot Plant, ORNL-TM-3567 (March 1972).
2. C. R. King, Vacuum Leak Testing of Radioactive Source Capsules, ORNL-3664 (January 1965).
3. V. A. DeCarlo, Design of a System for the Nondestructive Assay of $^{233}U$ in Waste Drums, ORNL-TM-4249 (August 1973).
4. R. W. Horton et al., Criticality Analysis: LWBR Assistance Program in Building 3019, ORNL-TM-3469 (March 1972).
5. J. T. Thomas, Nuclear Safety Review, NSR-8401 (May 1978).

## APPENDIX. PROGRAMMER FOR WELDING LIDS ON RECTANGULAR PACKETS

A special welding programmer was required for seal welding the lids on filled packets in the ANL-ZPR program. This programmer had to control the tungsten inert gas (TIG) torch as follows:

1. move the torch at a uniform rate along a straight line for a distance of 2 in. (50.8 mm),
2. turn 90° and move at the same rate for 0.25 in. (6.35 mm),
3. turn 90° in the same hand direction and move at the same rate for 2 in. (50.8 mm), and
4. turn 90° again in the same hand direction and move at the same rate for 0.25 in. (6.35 mm) to close the seal weld.

In actual practice, welding was started about 0.5 in. from the corner on a 2-in. (50.8-mm) dimension and continued around until about 0.25 in. (6.35 mm) of the weld, at the start, had a second pass.

Programmer Description. An $x$-$y$ motion table was constructed using linear bearings and 0.5-in.-diam (12.7-mm-diam) stainless steel rods. The welding head was coupled to a socket in the bottom of the table by a spring-loaded rod. When the $x$-$y$ motion table moved in the $+x$ direction, the welding head also moved in the $+x$ direction. When connected, the two moved as one in the $+y$, $-x$, and $-y$ directions.

The drive mechanism for the $x$-$y$ table consisted of two cams attached to a variable-speed, direct-current motor. The cam that provided the $x$ motion operated inside a spring-loaded yoke attached to the table. The $y$ motion cam was spring-loaded and moved against a pin on the table.

The cams are shown in Figs. 23 and 24. The $x$ cam was heart-shaped; the $y$ cam consisted of two half circles with an up-ramp and a down-ramp connecting the two, but 180° apart.

As the drive motor turned, the yoke on the heart-shaped cam moved the table in the $x$ direction until it reached the joining arc sections of the cam, thus moving the welding head 2 in. (50.8 mm). During the yoke travel on the arc sections, the table remained at the same location in the $x$ direction.

At the same time that the yoke moved onto the arc sections, one of the ramps on the $y$ cam had traveled into position such that the pin that

ORNL Dwg 81-12411R

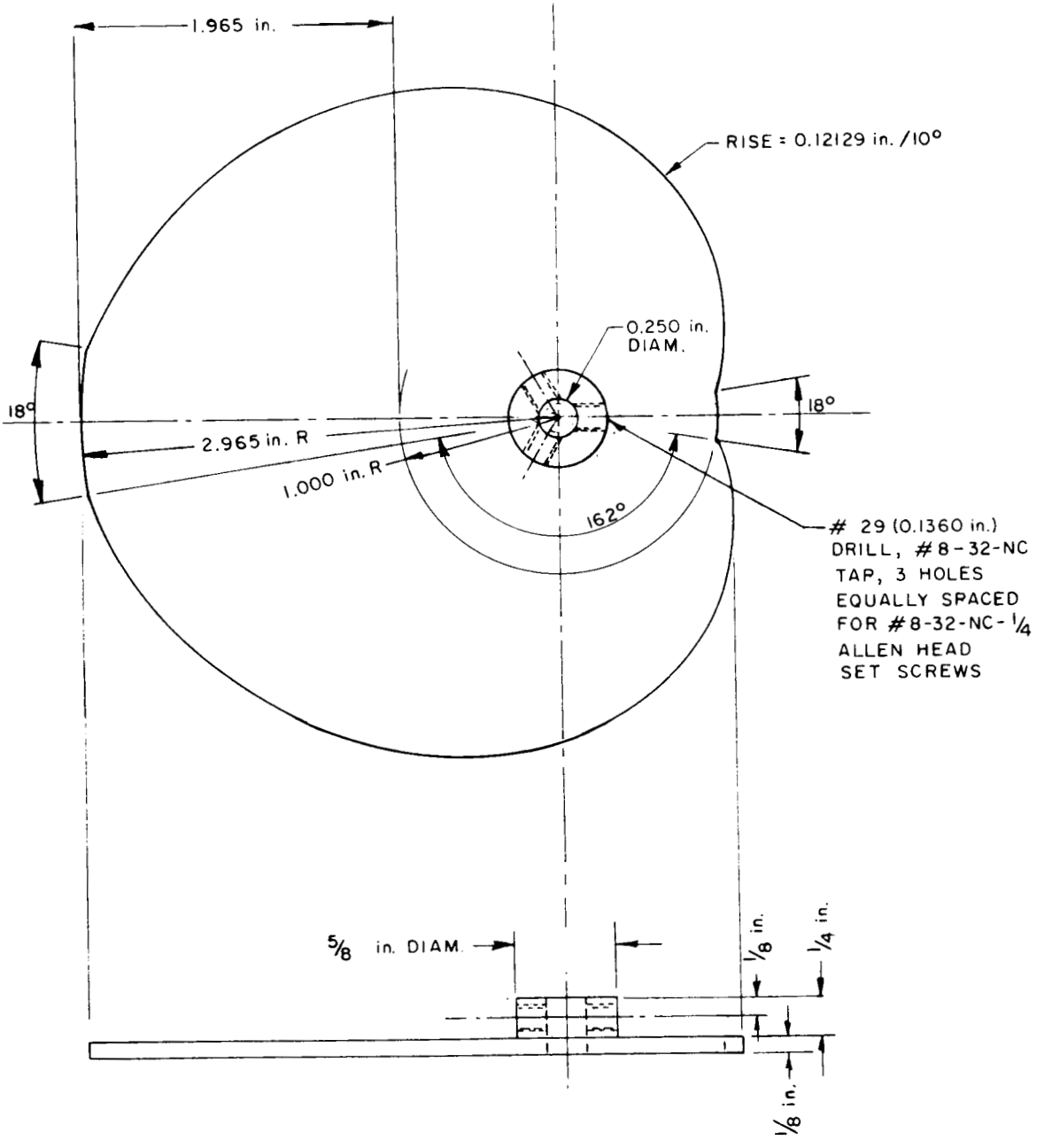


Fig. 23. The $x$ axis translator cam for ANL-ZPR program welder.

ORNL Dwg 81-12410R

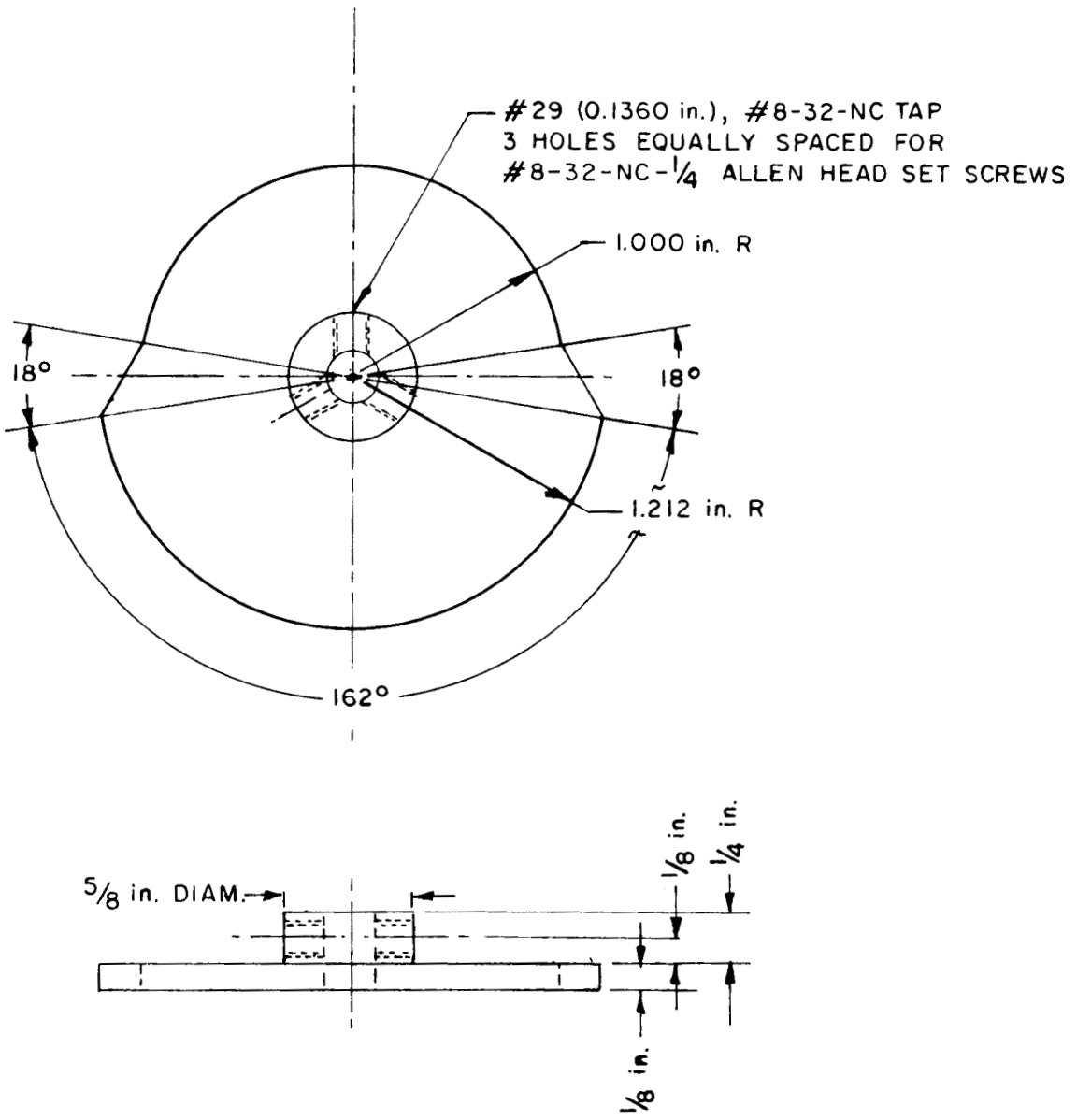


Fig. 24. The $y$ axis translator cam for ANL-ZPR program welder.

moved the table in the $y$ direction was forced from one circle to the other, moving the welding head 0.25 in. (6.35 mm) along a narrow edge of the packet.

The other half of the $x$ cam was a mirror image of the first; therefore, the yoke moved the welding head 2 in. (50.8 mm) along the back wide edge of the packet. Again, the yoke traveled on the arc sections, and the $y$ cam turned so that the second ramp was in position and the spring returned the table to its original position.

A pinion gear set was incorporated into the assembly to connect the two cams so that the relationship of the two to each other could be adjusted to produce 90° corner welds.

## INTERNAL DISTRIBUTION

1. C. W. Boatman
2-6. W. D. Box
7. G. H. Burger
8. E. D. Collins
9. B. C. Finney
10. A. L. Harkey
11. A. L. Johnson
12. L. J. King
13. R. F. Kirk
14-18. A. M. Krichinsky
19. J. M. Leitnaker
20. R. E. Leuze
21. A. L. Lotts
22-26. C. W. Martin
27. C. H. Miller
28-32. R. G. Nicol
33. G. E. Pierce
34. J. C. Price
35. O. W. Scates
36. M. G. Stewart
37. J. T. Thomas
38. S. K. Whatley
39. R. G. Wymer
40. L. Burris, Jr. (consultant)
41. G. R. Choppin (consultant)
42. W. H. Corcoran (consultant)
43. S. W. Drew (consultant)
44. A. M. Squires (consultant)
45. M. E. Wadsworth (consultant)
46-47. Central Research Library
48. ORNL-Y-12 Technical Library
Document Reference Section
49-50. Laboratory Records Department
51. Laboratory Records, ORNL R.C.
52. ORNL Patent Section

## EXTERNAL DISTRIBUTION

53. Office of Assistant Manager for Energy Research and Development, DOE-ORO, Oak Ridge, TN 37830
54-59. Donald Thompson, Procurement Division, Argonne National Laboratory, 9700 South Cass Ave., Argonne, IL 60439
60-86. Technical Information Center, Box 62, Oak Ridge, TN 37830

☆U.S. GOVERNMENT PRINTING OFFICE 1982-546-067/19