OAK RIDGE NATIONAL LABORATORY LIBRARIES
3 4456 0570164 8

NUREG/CR-2627
(ORNL/TM-8268)

cy. 25

Inadequate Core Cooling Instrumentation Using Heated Junction Thermocouples for Reactor Vessel Level Measurement

Prepared by R. L. Anderson, J. L. Anderson, G. N. Miller

Oak Ridge National Laboratory

Prepared for
U.S. Nuclear Regulatory Commission

Oak Ridge National Laboratory
Research Library
4500N, MS-6191
LIBRARY LOAN COPY
DO NOT TRANSFER TO ANOTHER PERSON.
If you wish someone else to see this report, send in name with report and the library will arrange a loan.
ORNL-116(10-05)

NOTICE

This report was prepared as an account of work sponsored by an agency of the United States Government. Neither the United States Government nor any agency thereof, or any of their employees, makes any warranty, expressed or implied, or assumes any legal liability or responsibility for any third party's use, or the results of such use, of any information, apparatus product or process disclosed in this report, or represents that its use by such third party would not infringe privately owned rights.

Available from

GPO Sales Program
Division of Technical Information and Document Control
U. S. Nuclear Regulatory Commission
Washington, D. C. 20555

Printed copy price: $6.00

and

National Technical Information Service
Springfield, Virginia 22161

NUREG/CR-2627
ORNL/TM-8268

Inadequate Core Cooling Instrumentation Using Heated Junction Thermocouples for Reactor Vessel Level Measurement

Manuscript Completed: March 1982
Date Published: March 1982

Prepared by
R. L. Anderson, J. L. Anderson, G. N. Miller

Oak Ridge National Laboratory
Oak Ridge, TN 37830

Prepared for
Division of Systems Integration
Office of Nuclear Reactor Regulation
U.S. Nuclear Regulatory Commission
Washington, D.C. 20555
NRC FIN B0746

Availability of Reference Materials Cited in NRC Publications

Most documents cited in NRC publications will be available from one of the following sources:

1. The NRC Public Document Room, 1717 H Street, N.W.
   Washington, DC 20555
2. The NRC/GPO Sales Program, U.S. Nuclear Regulatory Commission,
   Washington, DC 20555
3. The National Technical Information Service, Springfield, VA 22161

Although the listing that follows represents the majority of documents cited in NRC publications, it is not intended to be exhaustive.

Referenced documents available for inspection and copying for a fee from the NRC Public Document Room include NRC correspondence and internal NRC memoranda; NRC Office of Inspection and Enforcement bulletins, circulars, information notices, inspection and investigation notices; Licensee Event Reports; vendor reports and correspondence; Commission papers; and applicant and licensee documents and correspondence.

The following documents in the NUREG series are available for purchase from the NRC/GPO Sales Program: formal NRC staff and contractor reports, NRC-sponsored conference proceedings, and NRC booklets and brochures. Also available are Regulatory Guides, NRC regulations in the *Code of Federal Regulations,* and *Nuclear Regulatory Commission Issuances.*

Documents available from the National Technical Information Service include NUREG series reports and technical reports prepared by other federal agencies and reports prepared by the Atomic Energy Commission, forerunner agency to the Nuclear Regulatory Commission.

Documents available from public and special technical libraries include all open literature items, such as books, journal and periodical articles, and transactions. *Federal Register* notices, federal and state legislation, and congressional reports can usually be obtained from these libraries.

Documents such as theses, dissertations, foreign reports and translations, and non-NRC conference proceedings are available for purchase from the organization sponsoring the publication cited.

Single copies of NRC draft reports are available free upon written request to the Division of Technical Information and Document Control, U.S. Nuclear Regulatory Commission, Washington, DC 20555.

Copies of industry codes and standards used in a substantive manner in the NRC regulatory process are maintained at the NRC Library, 7920 Norfolk Avenue, Bethesda, Maryland, and are available there for reference use by the public. Codes and standards are usually copyrighted and may be purchased from the originating organization or, if they are American National Standards, from the American National Standards Institute, 1430 Broadway, New York, NY 10018.

Table of Contents

List of Figures v

Executive Summary vii

I. Introduction
- A. Background - TMI 1
- B. Definition of ICC 1
- C. Evaluation Considerations 7

II. ICC Instrumentation
- A. Existing Instrumentation 11
- B. Need for Additional Instrumentation 13
- C. Design Descriptions
  - HJTC Level Instrumentation 16

III. Description of Level Systems Tests and Analyses
- A. Performance Tests of CE Heated Junction Thermocouple
  - 1. ORNL Tests 25
  - 2. CE Tests
    - a. Phase I 25
    - b. Phase II 29
- B. Analyses of System Performance 30
- C. System Qualification 33

IV. Evaluation 35
- A. Evaluation Against NUREG-0737, II.F.2 Requirements including Appendix B) 38
- B. Evaluation Against Evaluation Considerations (I.C) . . . 38
- C. Information Quality/Specific Concerns . . . . . 43 (also see Index on p. 73)

V. Conclusions 80
- Open Items to be Resolved in Generic SER 80
- Plant Specific Items Which Must Be Approved Separately . . 80
- Limitations 81

References 82

Appendices

A. NUREG-0737, II.F.2 Requirements 85

B. Detailed Design Description of ICC Instruments 97
1. SMM 99
2. HJTC 102
3. CET 103
4. Displays 103

a. Accident Monitoring System 106

i. CFMS Displays and Functions 107
ii. QSPDS 115

b. ICC Instrumentation Processing & Displays 116

i. SMM 116
ii. HJTC 116
iii. CET 116

C. Model Technical Specifications 117

FIGURES

Figure		Page
1	Progress of events in a typical small break LOCA. The indicated time intervals are: 1. rapid depressurization, 2. loss of coolant to the top of the core, 3. misture level falls below top of core, and 4. recovery as mixture level rises above the top of the core (reproduced from ref. 7).	3
2	Schematic drawing of a HJTC level sensor showing the relative locations of the reference junction, the heated junction, the heater and the splash shield. Perforations in the splash shield (not shown) allow communication with water or steam outside the shields (taken from ref. 7).	17
3	Conceptual drawing of complete heated junction thermocouple level probe assembly. The eight sensors are surrounded by the separate tube with penetrations at the top and bottom for communication of the inside volume with water or steam in the reactor vessel head (taken from ref. 7).	18
4	Schematic drawing of reactor vessel head intervals. The locations of the two heated junction thermocouple level probes is as indicated (taken from ref. 7).	19
5	Schematic drawing of a section of the reactor vessel head intervals showing the guide tube to be added for the heated junction thermocouple level probe assembly (taken from ref. 7).	24
6	Results of feasibility study tests with ORNL prototype heated junction thermocouple with constant current heater power.	26
7	Results of ORNL tests with prototype heated junction thermocouple and proportional controller to maintain constant differential temperature (solid line). The level is indicated by a change in the heater voltage (dashed line).	27
8a	Schematic drawing of second generation heated thermocouple level sensor fabricated at ORNL.	28
8b	Drawing of HJTC probe installation inside CEA shroud in C-E operating plants.	45
8c	Drawing of split HJTC probe installation in C-E System 80 plants.	47

FIGURES (cont'd.)

9 Functional schematic drawing of the heated junction thermocouple probe assembly showing sensors and shields. the separator tube, and the guide tube (taken from ref. 22). 49

10 Schematic drawing of typical reactor vessel showing the path and location of the core exit thermocouple junction (taken from ref. 31). 51

11 Schematic drawing showing details of core exit thermocouple installation with respect to coolant flow from the core (taken from ref. 31). 52

12 Comparison of upper head drawing times to core uncovery times for a range of break sizes in the SEMISCALE tests S-07-10, S-UT-1, S-UT-4, and S-UT-6. The time predicted for the start of core uncovery in a C-E PWR is also shown in the upper left for comparison (taken from ref. 31). 57

13 Cladding temperatures at several locations and core exit temperature in SEMISCALE test S-07-10 for a 10% break (taken from ref. 31). 58

14 Predicted response of heated junction thermocouple reactor vessel level measurements system to a 0.05 sq ft cold leg break (taken from ref. 31). 68

15 Schematic drawing showing the arrangement of the heated junction thermocouple reactor vessel level measurements system components located inside the containment (taken from ref. 31). 70

16 Predicted correlation of the maximum clad temperature with the indication of the core exit thermocouples for two different rates of uncovery (taken from ref. 31). 73

17 Predicted correlation of the maximum clad temperatures with the level of the two-phase mixture in the core for two different rates of uncovery (taken from ref.31). 74

18 Functional drawing of C-E's ICC instrumentation system including sensor, processing, and display systems (taken from ref. 7). 98

19 Schematic drawing of sensor inputs from the primary coolant system to the SMM system (taken from ref. 7). 100

20 Schematic drawing of C-E in-core instrumentation detector assembly showing the location of the core exit thermocouple and relative locations of the SPND's (taken from ref. 7). 104

21 Schematic drawing of a reactor core showing typical locations of in-core instrumentation assemblies which include core exit thermocouples (taken from ref. 7). 105

EXECUTIVE SUMMARY

This document presents a technical review of the Inadequate Core Cooling Instrumentation with a Reactor Vessel Level Monitoring System using Heated Junction Thermocouples proposed by Combustion Engineering, Inc. for pressurized water reactors. This system is Combustion Engineering's response to requirements of NUREG-0737 to evaluate the need for additional instrumentation to detect the approach to inadequate core cooling and, in particular, to evaluate means for measuring reactor vessel water level.

Because the question of the need for reactor vessel measurement instrumentation has been a somewhat controversial issue, this report includes a great deal more material than is normally found in a technical review of this nature. It is the intention to provide in one document, coverage of all of the relevant material that has accumulated since the accident at TMI-2.

Emphasis was placed on evaluation of the generic Inadequate Core Cooling (ICC) Instrumentation system as a whole which includes, besides the heated junction thermocouple reactor vessel level measurement, the saturation margin monitor, the core exit thermocouples, the qualified safety parameter display system, and the critical functions monitor system. This system was evaluated on the basis of documentation supplied by Combustion Engineering, Inc. Any generic description of ICC instrumentation system is necessarily incomplete when applied to a specific plant because of differences in the individual plants. In the course of the evaluation of submittals by the individual licensees, it has become apparent that some utilities have chosen not to install the complete generic system offered by Combustion Engineering, particularly with respect to the display systems.

In Sect. I, a brief description of the TMI-2 background is followed by a detailed discussion of the definition of ICC. In this discussion, measurable variables are defined to provide a basis for evaluation of the ICC instrumentation system.

It is generally accepted by the NRC staff that the use of the ICC instrumentation is limited to those situations which ICC can be avoided by operator intervention. That is, primarily slow transients which include small break loss of coolant accidents (LOCAs). The progress of events in a large break LOCA is so rapid that the operator would not have time to react and the protective measures are instituted automatically. The point which defines the difference between a "small" break and a "large" break is then partially defined by a sufficiently large interval of time that allows the operator to take action. From small break analyses, C-E has specified the maximum sized small break to be a 78.5 cm^2 (4 in.) break. In a C-E System 80 plant, core uncovery begins about 13 min after the break in this model. In this worst case, calculation for the small break regime of events fuel cladding temperature is calculated to reach 843°C (1550°F) after about 30 min.

A definition of ICC and the functional requirements for the ICC Detection System were established assuming the following reactor conditions:

1. the reactor is shut down, so only decay power needs to be considered,
2. the coolant level falls below the top of the core due to a loss of coolant mass from the Reactor Coolant System (RCS), and
3. the event proceeds slowly enough so that the operator is allowed sufficient time to observe the instrument displays and take appropriate actions.

These conditions provide the boundaries for the range of sizes in three regimes of small break sizes in loss of coolant accidents (LOCA) caused by either RCS rupture or primary coolant expansion due to loss of heat sink (dryout of the steam generators). Loss of coolant occurs in the latter case when system pressure exceeds the relief valve or safety valve set points (or both).

It was concluded that the approach to ICC could be sensed in adequate time for remedial action if the indication of 1200°C fuel clad temperature was used as the criterion for the existence of ICC. The ICC instrument system is designed to indicate approach to ICC.

The instrument sensor package selected to monitor the ICC event progression consists of:

(1) Resistance temperature detectors (RTDs),
(2) pressurizer pressure sensors,
(3) reactor vessel level monitors employing the heated junction thermocouple (HJTC) design concept, and
(4) core exit thermocouples (CETs).

The signals from the RTDs, unheated thermocouples in the HJTC system, CETs, and pressure sensors indicate the loss of subcooling and occurrence of saturation and the achievement of a subcooled condition following core recovery.

The reactor vessel level monitors provide information to the operator on the decreasing liquid inventory in the reactor pressure vessel (RPV) regions above the fuel alignment plate (FAP), as well as the increasing RPV liquid inventory above the FAP following core recovery.

The core exit thermocouples (CETs) monitor the increasing steam temperature associated with the approach ICC as the two-phase mixture level drops below the top of the core and the decreasing steam temperatures associated with recovery from ICC.

The operational characteristics of nuclear power reactors may be divided into four broad classes: normal operation, abnormal operation--

slow transient, abnormal operation--fast transient and post accident operation. Abnormal operation resulting from a small break in the primary coolant system will produce a slow transient with loss of coolant inventory. An indication of the approach to core uncovery will facilitate an orderly handling of the problem. Post accident monitoring is needed to determine conditions in the vessel after a loss of coolant accident to insure that the reactor has been brought to a safe shut down and remains in a safe condition.

In Sect. II, the existing plant instrumentation which can be used for ICC detection is reviewed and this review is followed by an analysis of the need for additional instrumentation. Combustion Engineering's proposed heated junction thermocouple water level measurement system is described in some detail and this is followed in Sect. III by reviews of the testing done by ORNL and Combustion Engineering.

The studies of the TMI-2 accident generally concluded that additional instrumentation to indicate the approach to ICC should be considered for installation PWRs. It was also concluded that too great a burden was placed on the operators to diagnose the state of the RCS in the vessel by inference from existing instrumentation. Two parameters the TMI-2 operators did not have available which would have aided them to diagnose the true state of the RCS were a indication of the subcooling margin and a direct measurement of the reactor vessel level. This was also the conclusion of the ACRS in their initial report on the accident, the "TMI-2 Lessons Learned Task Force" and more specific requirements were issued in NUREG-0737 "Clarification of TMI Action Plan Requirements," Sect. II.F.2, "Instrumentation for the Detection of Inadequate Core Cooling."[13]

Three of the PWR reactor vendors have described ICC instrumentation systems that include the saturation margin monitor (unequivocally required by all plants) and indications of the core-exit thermocouples. Two vendors have included reactor vessel level measurement, and one offers an integrated computer driven ICC display system as a part of an accident monitoring system. The small break analyses performed by the vendors after TMI-2 have shown that a period of decreasing reactor vessel inventory may occur, particularly with smaller break sizes where the water level or two-phase mixture level above is located above the core in the vessel head. Indication of level in the reactor head fills in a blind spot in the available plant instrumentation. Water level measurement allows the operator to follow the course of the accident and determine if action or actions are required. The reactor vessel level measurement component of the ICC instrumentation is the only direct measurement of coolant inventory during significant portions of a small break accident. During recovery operations, without a measurement of reactor vessel level, the operator would have to infer the effectiveness of their actions from other plant instrumentation. But, between the recovery of the core and reestablishment of subcooling, there may be a substantial period (hours) where the only effective indicator or the progress of recovery is a measure of the water or mixture level above the core.

Section III also includes a review of the analyses of small break accidents performed by Combustion Engineering at the request of the NRC and these are related to reactor vessel level measurements.

Small Break LOCA Characteristics

Depressurization of the RCS and loss of coolant inventory depend on:

1. Energy and mass lost through the break,
2. heat removal from the system by the steam generator, and
3. characteristics of the safety injection pumps.

Combustion Engineering performed analyses for 0.1, 0.02 and 0.005 ft^2 breaks. Because more serious consequences occur as a result of multiple failures, small break analyses were also performed for these regimes of small breaks including: (a) assuming loss of feedwater to the steam generator and, (b) loss of feedwater with a stuck open PORV. In these cases, an unambiguous indication of reactor vessel water level when combined with the existing SMM and CETs will provide the operator with an integrated indication of the conditions of the coolant within the reactor vessel. In particular, in the smaller break analyses, there are significant periods during the course of the transients where reactor vessel level will provide the most direct and unambiguous indication of the state of the RCS.

Section IV includes the evaluations of the heated junction thermocouple level measurement system with respect to NUREG-0737 requirements and the instrumentation considerations. An extensive discussion of the ICC instrumentation system relating to possible ambiguities incorporates responses to concerns about the system that resulted from the review process and expressed by others.

The heated thermocouple liquid level sensor in its most basic form consists of a thermocouple with its measuring junction in good thermal contact with a source of heat. With a constant heat input, the temperature rise above ambient sensed by the thermocouple is an indication of efficiency of heat transfer to the surrounding medium. When the sensor is immersed in liquid water, for instance, the amount of heat which can be transferred away from the sensor is substantially greater than when the sensor is immersed in gaseous water vapor or steam providing the system is sufficiently far away from the critical point. Thus, even in its most elementary form, the heated thermocouple can provide a direct measure of the heat transfer efficiency of the surrouding medium.

In practice, a single junction thermocouple senses not only the rise in temperature caused by the heater, but also the temperature of the surrounding medium. To determine the temperature rise, a measure of the ambient temperature is required and this is commonly provided by adding a second thermocouple junction close to the heated junction, but sufficiently far away to provide a measure of the ambient temperature independent of the influence of the heater. As a simplification, the two

thermocouples can be conected in opposition, so that the differential output is a direct measure of the temperature rise due to the heater, independent of the ambient temperature. The thermocouple pairs cannot ony be connected in opposition for differential temperature measurements, but each thermocouple can also be measured to provide temperature indications at additional locations within the reactor vessel.

The HJTC system has the following advantages:

1. adaptablility to operating reactors,
2. compatibility with other methods for measuring level,
3. redundant,
4. non-hydraulic, and
5. no moving parts.

The following are disadvantages:

1. removal of either in-core instrumentation or partial length control rods is required,
2. resolution is limited by nozzle port dimensions and/or spare containment electrical penetrations, and
3. level is not monitored to the bottom of the vessel, nor within the core.

The heated junction thermocouple system proposed by Combustion Engineering consists of two detector strings. These strings will be installed in two new penetrations in the in-core instrumentation nozzle flanges. Two channels of level indication will be provided by pairing the detector strings. Each string will have eight sets of two thermocouples, one set at each discrete vertical location. The two thermocouples at each location will be connected in series but in electrical opposition to each other. One of the thermocouples will be electrically heated. With the system of thermocouples, level indications will be generated which will be sent to the display system in the control room. This display is anticipated to include two channels of the eight discrete sensor positions and the maximum unheated junction temperature in each channel. The back-up display will include the temperatures of the heated and unheated thermocouples at each of the eight locations. Trending information is also to be available.

As a result of experimental work, ORNL concluded[18] that reliable level indciation will be obtained with a heated junction thermocouple system if the probes are shielded from splashing and coolant flow velocities are not very high. Fast response time, radiation resistance, durability, reliability, self-protection and abnormality diagnosis capability are considered as proven advantages for this system.

Combustion Engineering has incorporated splash shields in their design. The measurement system provides separate readings of both the differential output of the heated and unheated junctions as well as the output of the unheated junction. The Critical Function Monitoring System uses the output of the unheated junction to supplement the resistance temperature detectors in the hot and cold legs.

The addition of the splash shields overcomes the major disadvantages of the heated thermocouple monitoring system which arise from its basic principle of operation. The temperature differential signal generated by the heated vs unheated thermocouple pairs is a measure of the heat transfer coefficient between the probe and the coolant at the heated junction elevation. The behavior of the heat transfer coefficient between a heated surface and water under the various conditions to be found in the region above the core in a nuclear reactor is as follows:

*Coolant in the liquid phase in a subcooled condition; the heat transfer coefficient is a function of flow rate and turbulence. Changes in the differential temperature signal will be opposite to the changes in flow rate.

*Coolant in the liquid phase at saturated temperature or in a mixed liquid-steam phase with not very high quality such that nucleate boiling occurs at the probe surface; the heat transfer coefficient is independent of flow rate and steam quality. The heat transfer coefficient is higher than for nonboiling conditions. The heat transfer coefficient is very sensitive to system pressure. Differential temperature will reflect system pressure changes.

*Coolant in a mixed liquid-steam phase with very high quality such that thin liquid film boiling occurs at the probe surface; the heat transfer coefficient steadily increases with quality and flow rate. When dryout occurs at the probe's surface, the heat transfer coefficient decreases suddenly.

*Coolant in a superheated steam condition; the heat transfer coefficient is low but increases with steam velocity. Changes in the differential temperature signal will be opposite to changes in the flow rate. At sufficiently high steam velocity, the differential temperature signal will be equal to the differential temperature signal for low velocity, liquid phase flow.

Consequently, it is expected that:

*With the primary pumps not running, the differential temperature signals will unambiguously detect the gradual uncovering of the probe's thermocouple pairs at the higher vessel levels. Combustion Engineering's addition of a shroud to surround the individual shielded heated junction thermocouple sensors provides a collapsed liquid level under two-phase flow conditions.

*With the primary pumps running, the shielded and shrouded heated junction thermocouple sensors will detect a gradual voiding of the circulating coolant by measuring the collapsed liquid level inside the shroud.

*On dryout, the differential temperature signal will suddenly jump and provide an unambiguous indication of lack of liquid at that point. Even though the effect of film evaporation is in a direction opposite to that indicating loss of coolant, the change

is rapid, and gives a characteristic dip in the curve which recovers rapidly. The rate at which this effect occurs is a function of the heater power supplied to the heated junction thermocouple heater and with the heater power intended for the installed systems, would be of such short duration as to be insignificant.

An explicit requirement for the ICC systems is that the information provided by the system shall give the operator "an unambiguous indication of an approach to inadequate core cooling." (NUREG-0737) This has been the central issue in the evaluation of the ICC instrument systems, but in particular the reactor vessel level measurement systems, since they are new instruments. In Sect. IV.D we discuss concerns expressed by ourselves and others with respect to the quality of information derived from the ICC instrumentation systems, that is, possible causes of ambiguity, sources of error, and reliability.

Several concerns have been expressed related to dynamic effects, i.e., how the probe operates with the primary coolant pumps on; how the probe operates in a two-phase mixture; and depressurization and repressurization effects. The probe will behave predictably under these situations, and if proper operating procedures are followed, should not give ambiguous readings of level, although the question of the response to pumps running is the subject of an ongoing analysis. The integrated system appears to have a carefully considered means of on-line checking. The system response time is predicted to be less than 30 s. Questions of ergonomics have been carefully dealt with in the design of the operator interface and displays. The ICC instrumentation system has been designed to be symptom dependent and not scenario dependent. The survivability of the in-vessel sensors is expected to be good, even after a large break LOCA type of accident. ?

The following limitations of the ICC instrumentation proposed by C-E were found:

1. The use of the ICC instrumentation is limited to those transients which progress relatively slowly and for which operation action is required to prevent ICC.

2. Size of the existing opening in the head limits the number of discrete level measurements to eight.

3. The system may not be used during a rapid depressurization. It is believed that these transients would be of short duration (≈ 100 s), relative to the response time required for the operator to take action in the regime of small break of 0.1 sq-ft and smaller. It is not expected to be used for very rapid transients associated with large breaks, since recovery actions should be initiated automatically without operator intervention. The system can be used, however, to monitor the recovery from large breaks.

The open items to be resolved include:

1. Generic emergency operating procedures have not been provided in the descriptions of the Combustion Engineering ICC systems. Detailed emergency operating procedures, however, are considered plant specific and will be reviewed separately for each plant.

2. Combustion Engineering will be asked to analyze the response of the HJTC system for the case of a small break in the upper head.

3. A modification to the design of the separator tube was announced in the NRC/Vendor/Utilities Meeting in Bethesda on February 17, 1982. In this modification, the HJTC probe has been divided into two independent sections; one in the upper head region and the second in the upper plenum. Analysis of the probe with this modification is a new open issue.

4. Analysis or testing of the behavior of the probe with primary coolant pumps running with both voided and unvoided coolant.

5. Completion of the Phase III tests and report.

We have identified no other significant open issues to be resolved with respect to the generic Combustion Engineering ICC instrumentation system.

The generic heated junction thermocouple reactor vessel level measurement system has been evaluated on the basis of documentation supplied by the C-E. Any generic description of reactor vessel level measurement systems is necessarily incomplete when applied to a specific plant because of differences in the individual plants. In the course of the evaluation of submittals by the individual licensees, it has become apparent that some utilities have chosen not to install the complete system offered by Combustion Engineering, particularly with respect to the display system. Specific plant designs must, therefore, be evaluated on a plant-by-plant basis in cases that are not covered clearly by the generic Combustion Engineering description or testing program.

Among the plant specific items which will be reviewed on a case-by-case basis are:

1. Location of the display system in the control rooms,
2. integration of the ICC displays into one console or rack, and
3. location of the HJTC sensors in the reactor vessel head.

The response of the applicants to items listed in NUREG-0737, II.F.2 (see Appendix A, this document) including Attachment 1 and Appendix B are to be reviewed on a plant specific basis for all plants. Deviations from the generic descriptions in this document must be justified.

The conclusion of this evaluation in Sect. V, is that the Inadequate Core Cooling Instrumentation system which includes the Heated Junction Thermocouple Reactor Level Measurement System proposed by Combustion Engineering will meet the requirements of NUREG-0737 to provide the plant operator with an unambiguous indication of the approach to inadequate core cooling during slow transients. For cases where the reactor vessel is filled with a two-phase mixture, experimental evidence indicates that the system will indicate collapsed liquid level or the trending of the reactor vessel coolant inventory. Furthermore, the system will provide the plant operator a valuable indication of the effect of the recovery measures from both slow and fast transients. Final approval of this system is contingent on plant specific reviews and resolution of the open items.

Analyses have been presented by the Westinghouse Owner's Group in WCAP-9753, of the system behavior with 1 and 4 in. diam breaks. Summary reports describing the generic analog and microprocessor based differential pressure level measurement system together with the Saturation Margin monitor and core exit thermocouples assert that these systems are adequate for detecting an approach to inadequate core coolig for breaks up to 4 in. diam. Tests of the differential pressure system were added to the regular testing program at SEMISCALE and the results reported in EGG-SEMI-5494 and EGG-SEMI-5552. Additional analysis of these results are forthcoming in ORNL-TMs. Some differences between indications of the Westinghouse system and the SEMISCALE differential pressure level system were noted in the upper head. Westinghouse claims that this difference is mainly a result of differences in the configurations betweeen the full-sized Westinghouse reactor and SEMISCALE upper head regions. Indications of other Westinghouse differential presure level measurements were in good agreement with the SEMISCALE instruments in the same range. A repeat test was performed with the configuration of SEMISCALE modified to simulate a Westinghouse reactor. The dp level measurement in this test were in good agreement (less than 5% error) with SEMISCALE instrumentation. On August 8, 1981, the NRC requested additional information from the utilities proposing to use the Westinghoue differential pressure system. Most of these questions have been resolved to the staff's satisfaction, but a few outstanding questions remain to be answered. The generic description of the system along with the clarification supplied appear to be adequate for approval of the system for trial installation and use. Plant specific features, however, will still require review on a plant by plant basis.

In summary, the systems proposed by Westinghouse do provide an unambiguous indication of water level above the core when, in fact, such a level exists. During rapid transients, ambiguous indication may occur, but are expected to be of brief duration. For cases where the reactor vessel is filled with a two-phase mixture, experimental evidence indicates that the differential pressure systems will indicate collapsed liquid level or the trending of the reactor vessel coolant inventory. The conclusion of this evaluation is that the inadequate Core Cooling Instrumentation system which includes the differential pressure reactor vessel level indicating system (RVLIS) proposed by Westinghouse will meet the requirements at NUREG-0737 to provide the plant operator with an unambiguous indication of the approach to adequate core cooling in small break LOCA transients. Furthermore, the system will provide the plant operator with a valuable indication of the effect of the recovery measures. Final approval is contingent on resolution of the open items listed below.

Generic emergency operating procedures have not been provided in the descriptions of the Westinghouse ICC systems. Detailed emergency operating procedures, however, are considered plant specific and must treat ambiguities, these will be reviewed separately for each plant. There are not other significant open issues to be resolved with respect to the generic Westinghouse ICC instrumentation system.

I. INTRODUCTION

I.A Background - TMI

The accident at Three Mile Island, Unit 2 originating on March 28, 1979, has become one of the most intensely studied technological mishaps in history. The Report of the Kemeny Commission presents a careful reconstruction of the events during the week of the accident, from a more human than technical point of view.[1] The accident was initiated by malfunctions of a pressure release valve and its actuator indicator, and propagated by operator errors because of inadequate information about the true state of the reactor system (loss of coolant through the leaking or open pressure relief valve). Inadequate training on the part of the operators led them to shut off safety injection flow based on a high pressurizer level indication. By shutting off the high pressure injection into the primary system that had automatically been initiated by the control system to make up the loss of coolant from the pressure relief valve, the subsequent sequence of events led to the uncovery of and probable severe damage to the reactor core.

At least one result of the post-TMI-2 studies was a mandate by the Kemeny Commission to the NRC to "consider the need for additional instrumentation to aid in understanding of plant status."[2] Through the efforts of the TMI-2 Lessons Learned Task Force, the NRC recommended the installation of additional instrumentation (if required) to "provide unambiguous, easy-to-interpret, indications of inadequate core cooling."[3] The Advisory Committee on Reactor Safeguards stated:

> "The Committee believes that it would be prudent to consider expeditiously the provision of instrumentation that will provide an unambiguous indication of the level of fluid in the reactor vessel. ...The Committee believes that as a minimum, the level indication should range from the bottom of the hot leg piping to the reactor vessel flange area."[4]

With the publication of NUREG-0737, all operating licensees and applicants for operating licenses were required to provide a description of any additional instrumentation to indicate inadequate core cooling and a time table for its installation.[5]

I.B Definition of Inadequate Core Cooling

Before describing the role of the ICC instrumentation system, we must first have a suitable working definition of ICC. Simply speaking, inadequate core cooling must refer to a state of the reactor coolant system in which it is no longer capable of removing sufficient heat from the core to prevent damage to the core, i.e., rupture and/or melting of the fuel cladding and release of radioactive materials into the primary coolant system. Maintaining the integrity of the core is necessary for safe reactor operation. Inadequate core cooling has been defined by the NRC staff:[6]

"The staff considers the core to be in a state of inadequate core cooling whenever the two phase froth level falls below the top of the core and the core heatup is well in excess of conditions that have been predicted for calculated small break scenarios for which some uncovery with successful recovery from the accident have been predicted. Possible indicators of such a condition are core exit superheat temperature and/or the rate of coolant loss or level drop prior to core uncovery and the extent and duration of uncovery."

While this provides a good phenomenological definition, a detailed operational definition of inadequate core cooling is required to guide the design and evaluation of ICC instrumentation. To limit the discussion to manageable proportions, we will be concerned only with situations for which the ICC instrumentation is intended to be used, (i.e., small break LOCAS.)

It is generally accepted by the NRC staff that the use of the ICC instrumentation is limited to those slow transient situations where significant response time is available for operator intervention, i.e., primarily "small break loss of coolant accidents" (LOCAs). The progress of events in a large break LOCA is so rapid that the operator would not have time to react, hence, the protective measures are completed automatically. For a "small" break LOCA there is a sufficient interval of time to permit the operator to take action. Because of difference in plant designs, this time period will be different for the plants of different vendors, however a general scheme for the progression of events is shown in Fig. 1 for a 78.5 cm^2 (4 in.) break in a C-E System 80 plant.[7] Core uncovery begins about 13 min after the break in this model. In this calculation for a small break event, fuel cladding temperature is calculated to reach 845°C (1550°F) after about 30 min.

I.B.1 CE's Approach to Defining ICC

The approach to defining ICC used by C-E was described[8] as a three step process. First, an operational definition was selected for the state of ICC. Second, typical accident events that lead to ICC were analyzed within the constraints of the definition. Third, instruments were selected and evaluated that would indicate the progression of one or more of these events.

II.B.1.1 CE's Definition of ICC. A definition of ICC and the functional requirements for the ICC Detection System were established assuming the following reactor conditions:

1. The reactor is shut down, so only decay power needs to be considered.

ORNL-DWG 82-10212

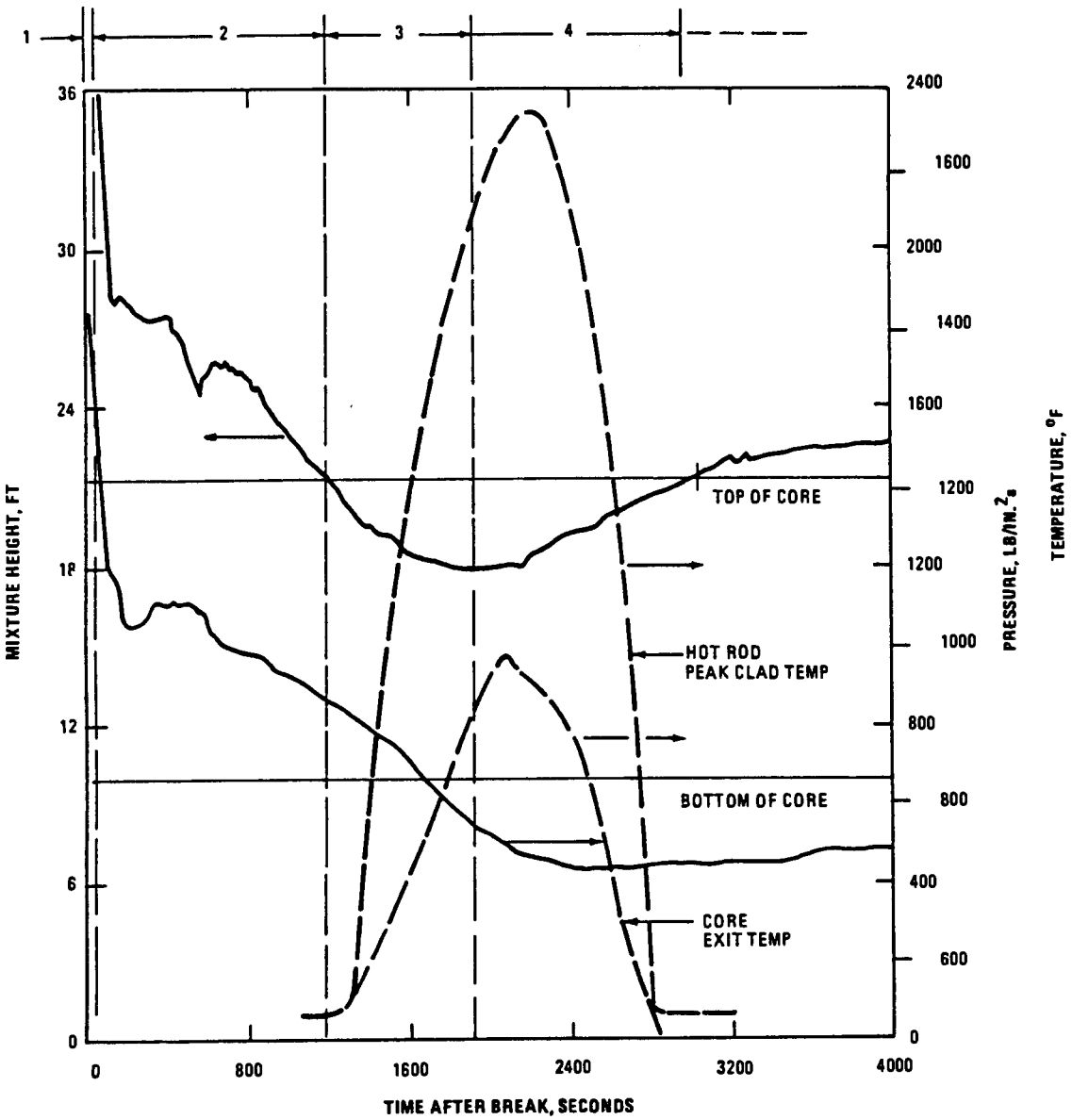

Fig. 1. Progress of events in a typical small break LOCA. The indicated time intervals are: 1. rapid depressurization, 2. loss of coolant to the top of the core, 3. mixture level falls below top of core, and 4. recovery as mixture level rises above the top of the core (reproduced from ref. 7).

2. The coolant level falls below the top of the core due to a loss of coolant mass from the Reactor Coolant System (RCS).

3. The event proceeds slowly enough so that the operator is allowed sufficient time to observe the instrument displays and take action to prevent ICC.

These conditions provide the boundaries for a regime of sizes of small break loss of coolant accident (LOCA) caused by either RCS rupture or primary coolant expansion due to loss of heat sink (dry out of the steam generators).

The ICC instrumentation is intended to warn the operator of an approach to the state of inadequate core cooling. Before selecting such instrumentation, a definition for a measurable indication of the existence of ICC is required. Once this is established, then it is possible to define the instrumentation to indicate the approach to ICC.

It was concluded from the small break LOCA analyses that the approach to ICC could be sensed in adequate time for remedial action if an indication of the fuel clad temperature of 1200°C was used as the criterion for the existence of ICC. The ICC instrumentation system is intended to indicate approach to ICC.

The system of instruments and sensors to detect the approach to ICC must provide the operator with a continuous indication of the thermalhydraulic states within the reactor vessel during a progression of events towards or away from ICC. This progression can be divided into measurable conditions based on the physical processes occuring within the vessel.

Conditions Associated with the Approach to ICC

Condition 1a	Loss of fluid supercooling leading to the first occurrence of saturation conditions in the coolant.
Condition 2a	Decreasing coolant inventory within the vessel head, (from the top of the vessel to the top of the active fuel).
Condition 3a	Increasing core exit temperature due to the uncovery of the core resulting from the level of the two-phase mixture of vapor bubbles and liquid dropping below the top of the active fuel.

Conditions Associated with Recovery from ICC

Condition 3b	Decreasing core exit steam temperature resulting from an increasing coolant level within the core.
Condition 2b	Vessel filled by the increase in liquid inventory so that the level of the two-phase mixture is above the fuel.
Condition 1b	Establishment of saturation conditions followed by an increase in fluid subcooling.

These conditions encompass all possible coolant situations associated with any ICC event progression. The conditions denoted with an "a" refer to fluid situations that occur during the approach to ICC. Conditions denoted by a "b" refer to fluid conditions which occur during the recovery from ICC. Thus, "a" conditions differ from "b" conditions in the trending (directional behavior) of the associated parameters.

To provide indicators during the entire progression of an event, an ICC instrument system consists of instruments that provide an unambiguous indication for the state of the RCS during at least one of each of the ranges of physical conditions described above.

Based on this description of the "approach to," and "recovery from" ICC, instruments were selected to:

1. Provide assurance that the selected ICC system could indicate the entire progression of events.

2. Demonstrate the extent of instrument diversity or redundancy possible with the available instruments.

By defining the ICC progression in an operational fashion, the processes of "approach to" and "recovery from" ICC can be associated with the measurable physical quantities.

The instrument sensor package selected to monitor the ICC event progression consists of (1) resistance temperature detectors (RTDs), (2) pressurizer pressures sensors, (3) reactor vessel level monitors employing the heated junction thermocouples (HJTC), and (4) core exit thermocouples (CETs). The signals from the RTDs, unheated thermocouples in the HJTC system, and pressure sensors may be combined to indicate the loss of subcooling and occurrence of saturation (Condition 1a) and the achievement of a subcooled condition following core recovery (Condition 1b). The reactor vessel level monitors provide information to the operator on the decreasing liquid inventory in the reactor pressure vessel (RPV) regions above the fuel alignment plate (FAP), as well as the increasing RPV liquid inventory above the FAP following core recovery (Conditions 2a and 2b). The core exit thermocouples (CETs) monitor increasing steam temperatures associated with an approach to ICC as the two-phase mixture level drops below the top of the core and monitor the decreasing steam temperatures associated with recovery from ICC (Conditions 3a and 3b).

I.B.2 Advanced Warning of the Approach to ICC

The ICC instrumentation provides the operator with an advanced warning of the approach to ICC by providing indications of:

1. The loss of subcooling and occurrence of saturation (Condition 1a) with a saturation margin motor (SMM) receiving input from primary

system RTDs, upper head HJTCs, selected CETs, and the pressurizer pressure sensors. (Auctioneering of temperature indications in various regions will detect saturation in a stratified system.)

2. The loss of inventory in the RPV (Condition 2a) with the reactor vessel level monitoring system (RVLMS).

3. The increasing core coolant exit temperature (Condition 3a) with CETs.

It should be noted that the RVLMS measures inventory (collapsed liquid level) rather than two-phase level. This measurement provides the operator with an advanced indication of the coolant level should conditions arise to cause the two-phase froth to collapse because of the loss of operating reactor coolant pumps.

I.B.3 Application of ICC Instruments

Following an event leading to ICC the ICC instrumentation indications will assist the operator in verifying that the core heat removal safety function is being met. ICC instrumentation indications available to the operator are (1) an increasing inventory level above the fuel alignment plate, (2) an increasing subcooling in the RPV and RCS piping, or (3) a decreasing core exit steam superheat. The operator is informed about the progression of an event by both static and trend displays. The trending of ICC information enables the operator to quickly assess the success of automatically or manually performed mitigating actions. A chart indicating the ICC trending during the various ICC progression conditions associated with the approach to and recovery from ICC is presented in Table 1.

Table 1. Indication of ICC status available to the operator from ICC instrumentation trending

Condition	Subcooling Measured by SMM	Water Inventory Measured by HJTC Probe	Coolant Superheat Measured by CET
I. Approaching an ICC Condition			
1a	Decreasing	Constant	Constant
2a	Constant	Decreasing	Constant
3a	Constant	Constant	Increasing
II. Receding From an ICC Condition			
3b	Constant	Constant	Decreasing
2b	Constant	Increasing	Constant
1b	Increasing	Constant	Constant

Instrument Range

In the ICC instrumentation sensor package, saturation temperature and water inventory are used as indicators for the approach to and recovery from ICC when there is water inventory above the fuel alignment plate. These measurements characterize conditions 1a, 1b, 2a, and 2b of the ICC progression.

When the two-phase level is below the fuel alignment plate, the measurement of core exit fluid temperature represents a direct indication of the approach to, and recovery from ICC (Conditions 3a and 3b). Therefore, the ICC sensor package is sufficient to provide information to the reactor operator on the entire progression of an event with the potential of resulting in ICC.

The limiting condition for applicability of the Heated Junction Thermocouple (HJTC) may be expressed by the maximum rate of decreasing level indication which it can provide. During the initial depressurization to the saturation pressure, following a small break, the level change can be very rapid. The level change and the HJTC indication will be more rapid than the operator can reasonably follow. After the initial depressurization, for a class of small breaks, the HJTC will provide an accurate indication of the decreasing level. For larger breaks, the event progresses too rapidly for operator action and automatic equipment alone is relied upon to provide the initial system response. The ICC instruments can be used to provide information during the refill portion of these events.

The HJTC is designed to follow a rate of decreasing level up to 1 in./s. This is equivalent to the rate for a 0.1 ft^2 break with the primary pumps running and with one high pressure safety injection pump.

Description of Event Progression

A typical small break LOCA illustrates the progression of an event which causes the approach to ICC. Figure 1 shows a representative behavior for the two-phase mixture level and the RCS pressure vs time for the event. The event progression is divided into the four intervals shown in Fig. 1 and defined in Table 2.

I.C Evaluation Considerations for Reactor Vessel Coolant Level Instrumentation

The Nuclear Regulatory Commission[9] (NRC) required evaluation and installation of instrumentation to detect the approach to inadequate core cooling. This evaluation was specified to include reactor vessel coolant level instrumentation. Many owners and operators of nuclear power reactors submitted their plans for implementing this requirement to the Nuclear Regulatory Commission for evaluation by January 1982.

The design requirements for this instrumentation are provided in Item II.F.2 and Appendix B of NUREG-0737[10] (see also Appendix A, this document). These criteria for the most part are functional in nature. There are additional characteristics that these systems should meet from the standpoint of the instrumentation and controls function these systems must fulfill. To assist in an objective evaluation of the methods proposed for reactor vessel level measurement, the instrumentation and controls characteristics were considered with respect to the different operating requirements.

The operational characteristics of nuclear power reactors may be divided into four broad classes: normal operation, abnormal operation--slow transient, abnormal operation--fast transient and post accident operation. Abnormal operation resulting from a small break in the primary coolant system will produce a slow transient with loss of coolant inventory. ICC instrumentation is intended to provide an indication of the approach to core uncovery and facilitate an orderly handling of the recovery. Post accident monitoring is needed to determine conditions in the vessel after a loss of coolant accident to insure that the reactor has been brought to a safe shut-down and remains in a safe condition.

As seen in Sect. I.B above, a set of conditions associated with the approach to and recovery from ICC is falling or rising liquid (or two-phase mixture) level in the vessel head region (Conditions 2a and 2b). Loss of RCS inventory after the system depressurization to saturation cannot be detected either by the SMM or CET. Additional instrumentation is required to eliminate this blind spot for the operators so that they can observe the entire progression of events. Reactor vessel coolant level instrumentation is applicable primarily to the slow transient, small break loss of coolant accident and recovery. Reliable operation of reactor vessel coolant level instrumentation during normal reactor operation is necessary, so that the reactor operators will be confident in the indications of the instruments and that the instruments will be in good operating order if a problem arises.

Neither the ICC instrumentation as a whole nor water level instrumentation in particular is required to follow fast transients resulting from a large break loss-of-coolant accident, since Reactor Protection System instrumentation will identify this problem and initiate automatic coolant injection systems before the operator could respond to the ICC instrumentation. It is important, however, that the level instrumentation be capable of surviving such a transient so that it will be available for post accident monitoring.

The table below lists in various functional areas, but not necessarily in order of importance, the considerations used in this evaluation to assess the capability of proposed instrumentation in addition to NUREG-0737 design requirements and application objectives.

General Considerations for Evaluation of Reactor Vessel Coolant Level Instrumentation

A. Installation Specific

1. Requirements on operator
2. Calibration, procedures, in-situ procedures, frequency standards, etc.
3. Redundancy or diversity
4. Useful output during normal operation
5. Ease of retrofit or replacement
6. Interference with refueling

B. Sensor and Transducer Specific

1. Expected in-service life
2. Radiation resistance
3. Environmental resistance
4. Resistance to temperature damage or effect
5. Accuracy and resolution
6. Speed of response

C. Accident and Post-Accident Monitoring

1. Effects of core uncovery
2. Effects of reactor internals movements
3. Effects of pressure excursions
4. Effects of flow variations
5. Ability to measure water quality

The evaluation of the C-E ICC system based on these considerations is discussed in Sect. IV below.

Table 2. Definitions of intervals in ICC event progression

Interval No.	ICC Phase	Bounding Parameter	Description
1	Approach to	Reduction in RCS subcooling until saturation occurs.	Depressurization of RCS to saturation pressure at hot leg temperature or heatup to saturation temperature at safety valve pressure.
2	Approach to	Falling collapsed level in upper plenum, down to top of active fuel.	Net loss of coolant mass from RCS accompanied by boiling from continued depressurization and/or decay power.
3	Approach to and/or Existence of	Two-phase level falls from top of active fuel until minimum level occurs during event progression or until 1200°C (2200°F) clad temperature occurs.	Two-phase level drops in core causing clad heatup and producing superheated steam at core unit.
4	Recovery from	Two-phase level rises above top of core.	Coolant addition by ECCS raises level and quenches fuel. ICC progression is defined to terminate when vessel is full or when stable, controllable conditions exist.

II. ICC Instrumentation

II.A Existing Instrumentation

The proposal for ICC instrumentation made by C-E has integrated existing instrumentation to the extent possible. This reduces the uncertainties which would result from a totally new system. The existing instrumentation incorporated into the CE ICC system includes the SMM and the core exit thermocouples. Table 3 is a list of typical accident monitoring instrumentation which can be found on most operating reactors.

II.A.1 Summary of Evaluation of Existing Sensors for Accident Monitoring (Typical)

Existing instrumentation was evaluated by C-E for possible application in an ICC Detection System.[7] The instruments considered are listed in Table 4, and their capabilities summarized. Significant conclusions about each instrument are given below. This discussion has been adapted from ref. 7.

II.A.1.1 Subcooled margin monitor. The Subcooled Margin Monitor (SMM), using input from existing Resistance Temperature Detectors (RTD) in the hot and cold legs and from the pressurizer pressure sensors, is adequate to detect the initial occurrence of saturation during LOCA events and during loss of heat sink events. A serious limitation to this approach is that the temperature is determined outside the reactor vessel - the primary heat source. This was demonstrated in the Ginna incident where the SMM and the CETs indicated subcooling, but the residual heat in the reactor vessel head caused the formation of a steam bubble.

The reliability of the SMM will be significantly increased after the pumps are tripped if the fluid temperature measurements included from the HJTCS and selected core exit thermocouples. C-E has modified the SMM to calculate and display degrees superheat [up to about 980°C (1800°F)] as well as degrees subcooling. The signals from the HJTCS temperature measurements provide information about possible local differences in temperature between the reactor vessel upper head/upper plenum (location of the HJTCS) and the hot or cold legs (location of the RTDs). The core exit thermocouples respond to the coolant temperature at the core exit and their signal indicates superheat after the coolant level drops below the top of the core and, thus, can be used to provide an approximate indication of the depth of core uncovery. (see Sect. IV.D.25)

With these modification, the SMM can be used for detection of the approach to ICC, namely Interval 1 (loss of subcooling), Interval 3 (core uncovery) and Interval 4 (core recovery) (cf. Fig. 1). But, even with these modifications, the SMM will not provide an indication of Interval 2 when the coolant is at saturation conditions and the coolant level is between the top of the vessel and the top of the core.

II.A.1.2 Resistance temperature detectors (RTD). In pre-TMI installations, indications of the RTDs were considered adequate for sensing the initial occurrence of saturation when combined with RCS pressure and relevant steam table. The hot leg RTD indicator range was sufficient to sense saturation for events initiated at power. The cold leg RTD indicators, which had a wider range, were capable of sensing saturation for events initiated from zero power or shutdown conditions.

Since the RTD indicator range was not adequate for ICC indications during core uncovery, C-E has increased the range of RTD indications to cover a temperature range from 38°C to 980°C (100°F to 1800°F). In a depressurization LOCA, the core may uncover at low pressure, with a saturation temperature which was formerly below the lower limit of the hot leg RTD indicator. Initial superheat of the steam would therefore not have been detected by the hot leg RTD indicator. In addition, as the uncovery proceeded, the superheated steam temperature could quickly have exceeded the upper limit of the narrow RTD indicator range.

II.A.1.3 Core exit thermocouples. The indications of the core exit thermocouples measure the approach to ICC after core uncovery for the events analyzed, provided that the signal processing and display does not add substantial time delay to the thermal delay at the thermocouple junction. As mentioned above, the core exit thermocouples respond to the coolant temperature at the core exit and indicate superheat after the core is no longer completely covered by coolant. Except for a time delay of about 200 to 400 s, depending on event, the trend of the change in superheat measured by the CETs can be correlated to the trend of core uncovery from which the trend of the change in cladding temperature may be inferred.

II.A.1.4 Self powered neutron detectors (SPND). The SPND yield a signal resulting from a high temperature (rather than neutrons) as the two-phase level falls below the elevation of the SPND and the core heats up. However, testing is required to identify the phenomena responsible for the anomalous behavior of the SPND at TMI-2. At the present, the use of SPND is limited to low temperature events [less than 540°C (1000°F) clad temperature] or to only the initial uncovery portion of an event.

II.A.1.5 Ex-Core neutron detectors. Existing source range neutron detectors are sensitive enough to respond to the formation of coolant voids within the vessel during the events analyzed. However, the signal magnitude is ambiguous because of the effects of varying boron concentration and deuterium concentration in the reactor coolant. A stack of ex-core detectors may give less ambiguous information on voids and level in the vessel. The relative shape of the axial distribution of signals from a stack of five detectors shows promise as an ICC indicator, but additional development is needed.

II.A.1.6 In-Core thermocouples. While PWRs do not have in-core thermocouples at present, it appears, in general, feasible that such thermocouples could be added to or substituted for some SPNDs in the in-core instrument string. They would respond more quickly to core uncovery than the core-exit thermocouples. Also, because of closer proximity to the fuel rods, they would likely indicate temperatures closer to the cladding temperatures than the steam temperature measured by the core exit thermocouples.

For top mounted in-core instrumentation, the core exit thermocouples have a greater likelihood of longer survival for deep uncovery events because the thermocouples and their leads are exposed only to core exit steam temperatures which is less than the fuel clad temperatures. With bottom mounted in-core instrumentation (including the CETs), those in-core thermocouples located below the two-phase level would survive longer than the core exit thermocouples because the thermocouple leads of the latter pass through the high temperature core region during uncovery.[11]

Support for APSL arguments?

Using a synthesis approach, similar to the one described for core exit thermocouples, it is expected that the temperatures indicated by the in-core thermocouples could be be related more directly to the adjacent fuel clad temperatures than is possible with a correlation based on the indications of core-exit thermocouples. Additional work is required, however, before temperature response of in-core thermocouples can be related to fuel clad temperatures. Mechanical design would be required to incorporate additional thermocouples into the in-core instrument string.

II.B Need for Additional Instrumentation

The studies of the TMI-2 accident generally concluded that additional instrumentation to indicate the approach to ICC should be considered for installation in both operating plants and plants applying for operating licenses. It was also concluded that too great a burden was placed on the operators to diagnose the state of the RCS in the vessel by inference from the diverse indications of existing instrumentation. Formerly, (before TMI) the subcooling margin had to be obtained by taking the indication of the hot leg temperature RTDs and the indication of the pressurizer pressure sensor and looking up the corresponding amount of subcooling in steam tables (a copy of which was not in the control room at TMI during the early hours of the accident). The procedures the operators were following instructed them to infer the RCS inventory from the pressurizer level indication. Because the system was losing coolant via the pressurizer through the stuck-open PORV, there was an indicated high level in the pressurizer while the reactor coolant inventory was low. The decay heat from the core caused the coolant in the primary system to expand, filling the pressurizer. The operators shut off the high pressure injection to keep (so they thought and had been taught) the RCS from going "solid." With continued loss of coolant through the stuck PORV, the core began to uncover because of the loss of subcooling leading to the formation of voids in the reactor vessel.

Two parameters that the operators did not have available that would have aided the operators to diagnose the true state of RCS were an indication of the subcooling margin and a direct measurement of the reactor vessel level. This was also the conclusion of the ACRS in their initial report on the accident:

> "...additional information regarding the status of the system will be needed in order for the plant operator to follow the course of an accident and thus be able to respond in an appropriate manner. As a minimum, and in the interim, it would be prudent to consider expeditiously the provision of instrumentation that will provide an unambiguous indication of the level of fluid in the reactor vessel..."[12]

The final report of the "TMI-2 Lessons Learned Task Force" published in October of 1979 includes the following recommendation:

> "Each licensee should be required to define and adequately display in the control room a minimum set of plant parameters (in control terminology, a state vector) that defines the safety status of the nuclear power plant. The minimum set of plant parameters should be annotated for sensor limits, process limits, and sensor status. The annotated set of plant parameters should be presented to the operator in real time by a reliable, single-failure-proof system located in the control room. The annotated set of parameters should also be available in real time in the Onsite Technical Support Center.
>
> "The objective of this recommendation is to require a concise set of information that is easily available and assessed by the operator and the shift technical supervisor to ascertain the safety status of the operating process... . As a further guideline for the development of the safety state vector, the status of the plant process should be designed and instrumented as a function of the various barriers against the release of radioactivity. For example, the two primary barriers are the fuel cladding and the reactor coolant pressure boundary. Thus, parameters such as primary liquid inventory and coolant radioactivity levels would be principal components of the state vector for these levels of defense. Similarly, reactor coolant level ...would be principal components for the state vector for the engineered safety feature levels of defense."[13]

The high cladding temperatures resulting from ICC can lead as a first step to rupture of the fuel pin cladding. This becomes more likely as the fuel is used. The fission reactions lead to a pressurization of the fuel pins due to formation of gaseous fission products. Secondly, at somewhat higher temperatures, the rate of the chemical reaction between the water and the Zircaloy fuel pin cladding becomes appreciable and results in the production of gaseous hydrogen inside the reactor vessel. This was undoubtedly the source of the hydrogen bubble inside the reactor vessel at TMI-2.

"The NRC Action Plan Developed as a Result of the TMI-2 Accident,"[14] identified water level in the core as one of the new instrumentation needs. More specific requirements were issued in NUREG-0737 'Clarification of TMI Action Plan Requirements,' Sect. II.F.2, 'Instrumentation for the Detection of Inadequate Core Cooling.'[15]

> "Licensees shall provide a description of any additional instrumentation or controls (primary or backup) proposed for the plant to supplement existing instrumentation (including primary coolant saturation monitors) in order to provide an unambiguous, easy-to-interpret indication of inadequate core cooling."

The requirements set forth in NUREG-0737 did not explicitly require the installation of water level instrumentation in the reactor vessel, but it did require that such reactor-water-level instrumentation be evaluated. Instrumentation to detect inadequate core cooling was required to (1) give advance warning of the approach to ICC, (2) to cover the full range from normal operation to complete core uncovery. In practice, ICC systems that have not included reactor vessel level measurement have been found unacceptable by the NRC staff. All three of the PWR reactor vendors have described ICC instrumentation systems that include the saturation margin monitor (unequivocally required for all plants) and indications of the core-exit thermocouples. Two vendors have included reactor vessel level measurement, and at least one offers an ICC display system as a part of an integrated computer-driven accident monitoring system. The small break analyses performed by the vendors after TMI-2 have shown that a period of decreasing reactor vessel inventory may occur, particularly with smaller break sizes where the water level or two-phase mixture level above is located above the core in the vessel-head. Indication of level in the reactor head fills in a blind spot in the available plant instrumentation. Water level measurement allows the operator to follow the course of the accident and determine if action or actions are required. The reactor vessel level measurement component of the ICC instrumentation is the only direct measurement of coolant inventory during significant portions of a small break accident (see summary of analyses in Sect. III.B below).

Similarly, during recovery operations, without a measurement of reactor vessel level, the operator would have to infer the effectiveness of the actions from other plant instrumentation. But, between the recovery of the core and reestablishment of subcooling, there may be a substantial period (hours) where the only effective indicator of the progress of recovery is a measure of the water or mixture level above the core.

Finally, if a "bleed and feed" mode of cooling were used, it would be essential for the operator to monitor the reactor vessel level particularly during the "bleed" operation, to avoid uncovering the core.

II.C Design Description of the Heated Junction Thermocouple (HJTC) Reactor Vessel Level Measurement System

The HJTC system measures reactor coolant liquid inventory with discrete HJTC sensors located at different levels within a separator tube ranging from the top of the core to the reactor vessel head. The basic principle of system operation is the detection of a temperature difference between adjacent heated and unheated thermocouples.

As pictured in Fig. 2, the HJTC sensor consists of a Chromel-Alumel thermocouple near a heater (or heated junction) and another Chromel-Alumel thermocouple positioned away from the heater (or unheated junction). In a liquid which has relatively good heat transfer properties, the temperature difference between the adjacent thermocouples is very small. In steam or gas which have relatively poor heat transfer properties the temperature difference between the thermocouples is large.

Two design features ensure proper operation under all thermal-hydraulic conditions. First, each HJTC is shielded to avoid cooling due to direct water contact during two phase fluid conditions. The HJTC with the splash shield is referred to as the HJTC sensor (see Fig. 2). Second, a string of HJTC sensors is enclosed in a tube that separates the liquid and gas phases that surround it.

The separator tube creates a collapsed liquid level inside the tube that is measured by the HJTC sensors. This collapsed liquid level is directly related to the average liquid fraction of the fluid in the reactor head volume above the fuel alignment plate. This mode of direct in-vessel sensing reduces spurious effects due to pressure, fluid properties, and non-homogeneities of the fluid medium. The string of HJTC sensors and the separator tube is referred to as the HJTC probe.

The HJTC system has two channels of HJTC instruments in a probe assembly that includes eight (8) HJTC sensors, a seal plug, and electrical connectors (Fig. 3). The eight (8) HJTC sensors are electrically independent and located at eight levels from the reactor vessel head to the fuel alignment plate. (see Sect. IV.D.27)

The probe assembly is housed in a stainless steel structure to protect the sensors from flow loads and serves as the guide path for installation of the sensors. Figure 4 shows the locations of the HJTC probe assemblies in the reactor vessel head.

The signal produced by the HJTC probe is a small electrical emf similar in magnitude to, or greater than, the emf produced by typical temperature sensing devices presently used in the reactor coolant system. This signal may be transmitted from within the reactor vessel to outside of the containment building with no intermediate electronics. Furthermore, the signal is not subject to external disturbances, such as containment environment as would be present with a hydraulic signal transmission system.

ORNL-DWG 82-10220

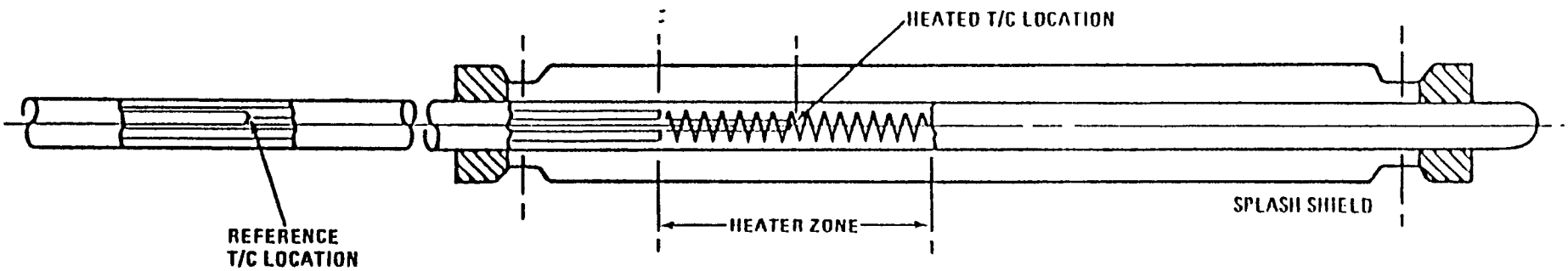

Fig. 2. Schematic drawing of a HJTC level sensor showing the relative locations of the reference junction, the heated junction, the heater and the splash shield. Perforations in the splash shield (not shown) allow communication with water or steam outside the shields (taken from ref. 7).

ORNL-DWG 82-10221

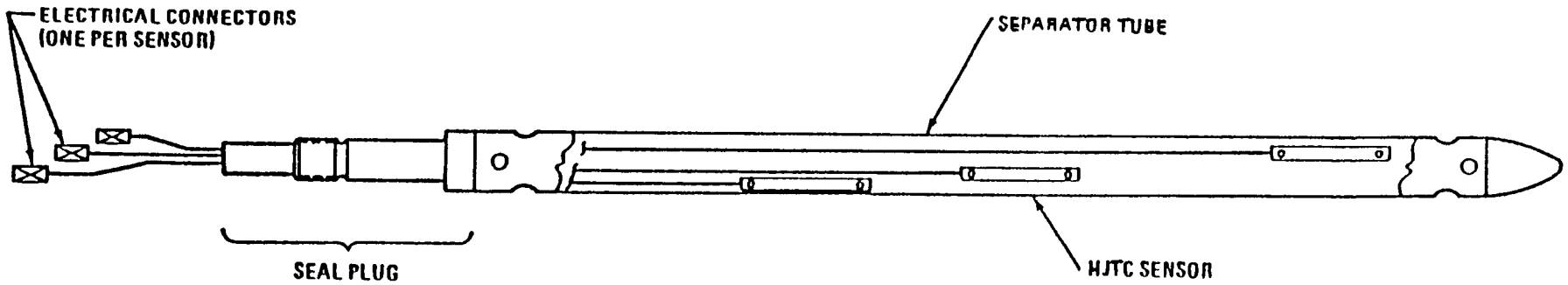

Fig. 3. Conceptual drawing of complete heated junction thermocouple level probe assembly. The eight sensors are surrounded by the separate tube with penetrations at the top and bottom for communication of the inside volume with water or steam in the reactor vessel head (take from ref. 7).

ORNL-DWG 82-10179

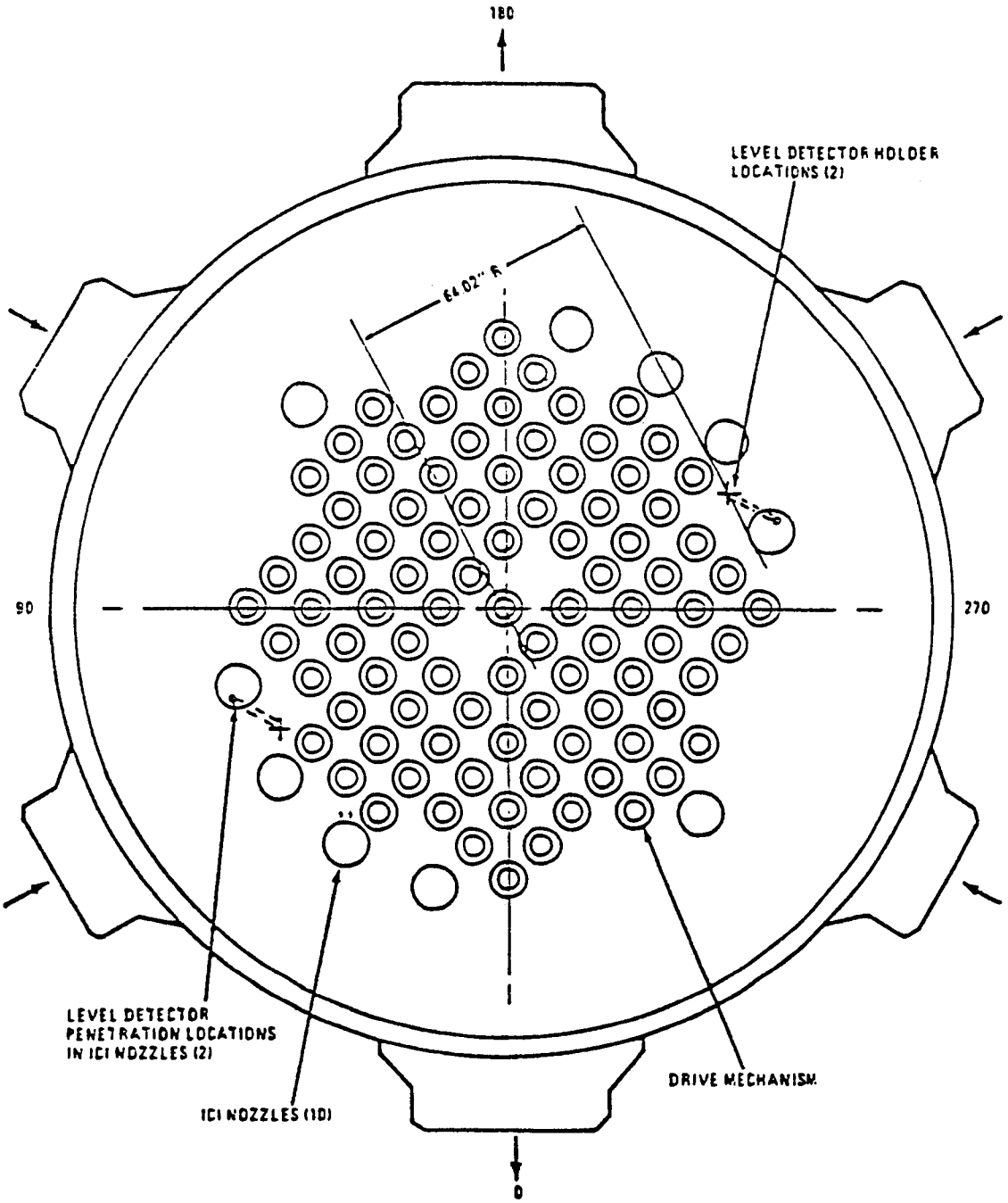

Fig. 4. Schematic drawing of reactor vessel head intervals. The locations of the two heated junction thermocouple level probes is as indicated (taken from ref. 7).

The HJTC can provide significant information to the operator for two conditions associated with an ICC event - Condition 2a, the approach to uncovery and Condition 2b, the refill. For a "large" small break event (4 in. break) the two-phase level drops to the top of the core within 5 to 15 min of the break initiation. In this event, the HJTC would show the rapidly decreasing coolant inventory and would quantify for the operator the status of the degrading situation which is otherwise evident to him from numerous existing instruments. For smaller breaks, the progression of the event is slower, and the HJTC can provide significant information on the effectiveness of his mitigating actions. It is probably for such long term conditions, prior to core uncovery, that the HJTC would have its greatest usefulness.

Following recovery of the core, the operator could use the HJTC to verify that the core is again covered and therefore is being adequately cooled. Through monitoring the HJTC level the operator has better indication of the correctness and effectiveness of these actions in maintaining the coolant inventory.

TECHNICAL DESCRIPTION OF THE REACTOR VESSEL INTERNALS CHANGE

The mechanical changes required will be plant specific. An example, considered typical, has been adapted from the SAR submitted by Combustion Engineering Owner's Group, as CESSAR-F.[16]

Installation of the HJTC probes requires hardware modifications to the upper internals of the reactor vessel to provide a holder and guide path for level detector assemblies.

Basically, three major components of the upper internal structure require modification. These include the upper guide structure assembly, the instrument support plate assembly, and the in-core instrumentation nozzle. The upper guide structure must be changed to include two instrument guide tubes, support brackets and lead-in funnels as shown on Fig. 5. The instrument support plate must be modified to accommodate a thimble cluster assembly shown in Fig. 5. An additional penetration must be added in each of two ICI nozzle flanges.

After the changes are complete, the reactors will have provisions for two level detector assemblies located in the reactor vessel head.

Table 3. Accident monitoring instrumentation

	Instrument	Required Number of Channels	Minimum Channels Operable
1.	Containment Pressure - Narrow Range	2	1
2.	Containment Pressure - Wide Range	2	1
3.	Reactor Coolant Outlet Temperature - T_{HOT} (Wide Range)	2	1
4.	Reactor Coolant Inlet Temperature - T_{Cold} (Wide Range)	2	1
5.	Pressurizer Pressure - Wide Range	2	1
6.	Pressurizer Water Level	2	1
7.	Steam Line Pressure	2/steam generator	1/steam generator
8.	Steam Generator Water Level - Narrow Range	1/steam generator	1/steam generator
9.	Steam Generator Water Level - Wide Range	2/steam generator	1/steam generator
10.	Refueling Water Storage Tank Water Level	2	1
11.	Auxiliary Feedwater Flow Rate	1/steam generator	1/steam generator
12.	Reactor Coolant System Subcooling Margin Monitor	2	1
13.	Safety Valve Position Indicator	2/valve	1/valve
14.	Spray System Temperature	2	1
15.	Spray System Pressure	2	1
16.	LPSI Header Temperature	2	1
17.	Containment Temperature	2	1
18.	Containment Water Level - Narrow Range	2	1
19.	Containment Water Level - Wide Range	2	1
20.	Core Exit Thermocouples	7/core quadrant	4/core quadrant
21.	Containment Area Radiation - High Range	2	1
22.	Main Steam Line Area Radiation	1/steam generator	1/steam generator
23.	Condenser Air Ejector Noble Gas Monitor - Wide Range	1	1
24.	Purge/Vent Stack Noble Gas Monitor - Wide Range	1/stack	1/stack
25.	Cold Leg HPSI Flow	2/cold leg	1/cold leg
26.	Hot Leg HPSI Flow	1/hot leg	1/hot leg

Table 4. Instruments included in evaluations for ICC instrumentation system.

Instruments	Development status	Post-Accident Qualification Status	Indication Provided by Instrument	Non-Ambiguity of Signal	Portion of ICC Event Indicated
Subcooled Margin Monitor	Exists	Qualified	Degree of Subcooling in RCS	Good	Approach
Heated Junction Thermocouples	Developed	Will be Qualified	1. Liquid inventory in upper head	Good	Approach
			2. Liquid inventory in upper plenum	Good	Recovery
			3. Axial temperature distribution in head and plenum	Good	
Core Exit Thermocouples	Exit	Can be done	1. Liquid temperature at core exit	Good	Approach
			2. Infer with synthesis		
			a. Calculated mixture level in-core	Fair	Existence
			b. Calculated clad temperature	Uncertain	Recovery
In-Core Thermocouples	Concept	Can be done	1. Metal temperature inside guide tube when RCP off	Good	Approach Existence
			2. Infer:		
			a. Effective mixture level in-core	Uncertain	Recovery
			b. Clad temperature		
Self Powered Neutron Detectors	Exist	Can be done	Indirect measure of mixture (Low-pressure uncovery)	Poor	Approach Only
Hot Leg RTD (5 each)	Exist	Qualified	Fluid temperature in hot leg Infer calculated mixture level and clad temperature	Good Fair Uncertain	Approach Existence Recovery

Table 4. Cont'd

Instruments	Development Status	Post-Accident Qualification Status	Indication Provided by Instrument	Non-Ambiguity of Signal	Portion of ICC Event Indicated
Ex-Core Neutron Detector (One, Source range)	Exists	Can be done	Indirect measure of gross voiding Indirect indication of mixture level in-core RCP off	Poor	Approach Existence Recovery
Ex-Core Neutron Detector (Stack of 5, Source range)	Concept	Can be done	Same as one ex-core detector, but more axial resolution	Poor	Approach Existence Recovery

ORNL-DWG 82-10178

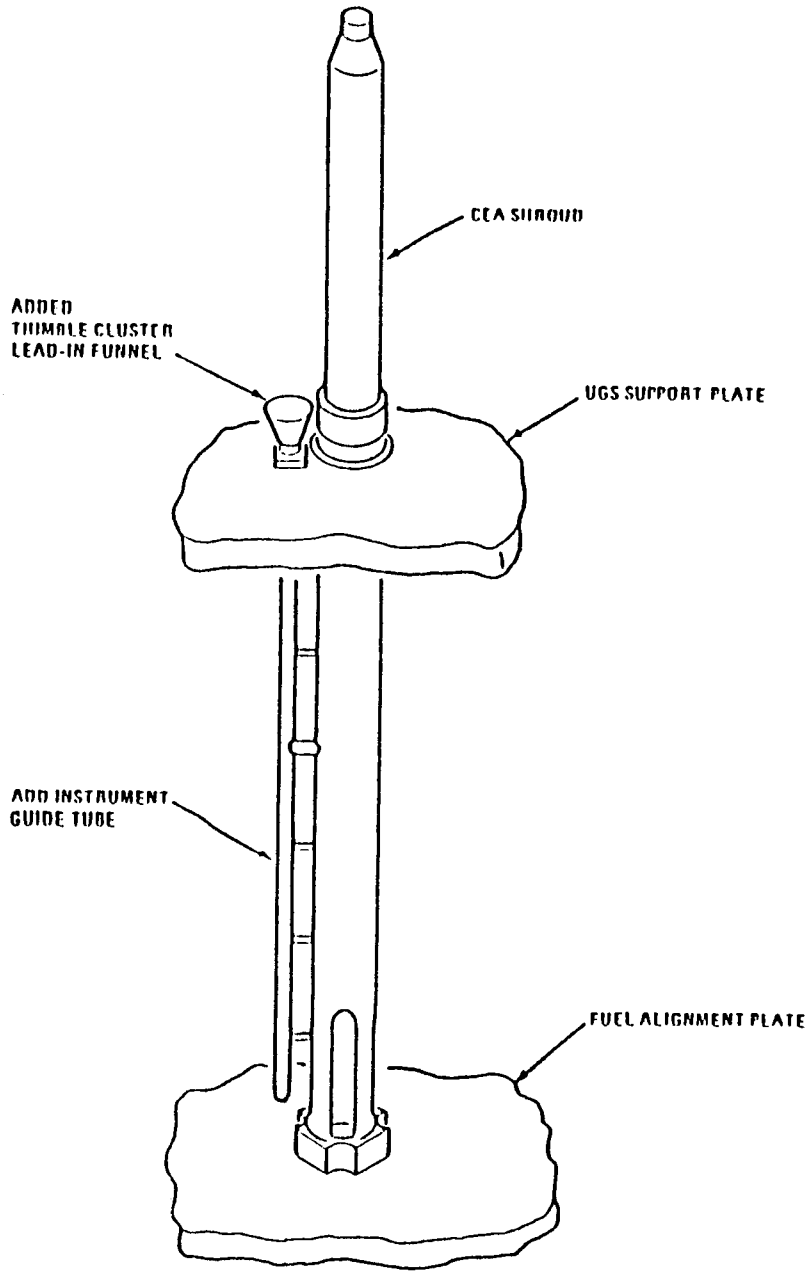

Fig. 5. Schematic drawing of a section of the reactor vessel head intervals showing the guide tube to be added for the heated junction thermocouple level probe assembly (taken from ref. 7).

III. DESCRIPTION OF LEVEL SYSTEMS TESTS AND ANALYSES

III.A Performance Tests of C-E Heated Junction Thermocouple

III.A.1 ORNL Tests

ORNL began testing to determine HJTC feasibility as an in-vessel level detector in the summer of 1979. Early experiments were run to determine the best mode of operation - constant power input to the heater and changing emf output from the differential thermocouple, or controlled constant temperature with the change in power level measured to determine presence or absence of liquid. As seen in Figs. 6 and 7, either mode of operation provides a clear indication of presence or absence of liquid. Several prototype probes were fabricated at ORNL (Fig. 8a). HJTC level probes were loaned by the Navy, and probes were purchased from commercial suppliers for testing. During the early testing of these probes, it became apparent that some kind of splash shield would be necessary. Shields were designed for the ORNL probes and both ORNL and C-E shielded probes were tested in a high pressure, two-phase flow in the Thermal Hydraulic Test Facility at ORNL. At high mass flux rates, both probes were found to be insensitive. These considerations led C-E to include the separator tube around the HJTC sensor to minimize the effects of flow. The results from the ORNL development program have been published in a series of quarterly reports.[16-21]

III.A.2.a Phase I tests. The Phase I[22] document mainly reviews results of a series of experiments conducted to test the feasibility of employing heated junction thermocouple sensors to measure reactor vessel coolant level. Most of these tests decribed were performed either by Combustion Engineering[23] or ORNL.

The objectives of the Phase I and ORNL tests were:

1. Determine the response of an unshielded HJTC to steam or water at various temperatures and pressures. (C-E, ORNL)

2. Determine the response of an unshielded HJTC to two-phase conditions. (C-E, ORNL)

3. Determine the response of a shielded HJTC to single and two-phase conditions. (C-E, ORNL)

4. Determine the response of a shielded HJTC in a separator tube to single and two-phase conditions. (C-E)

A series of separate tests were devised to achieve these objectives. The results of C-E's Test series 1 agreed with similar tests conducted at ORNL in early 1980. These studies showed that the difference in temperature between the heated and unheated junctions was large enough to

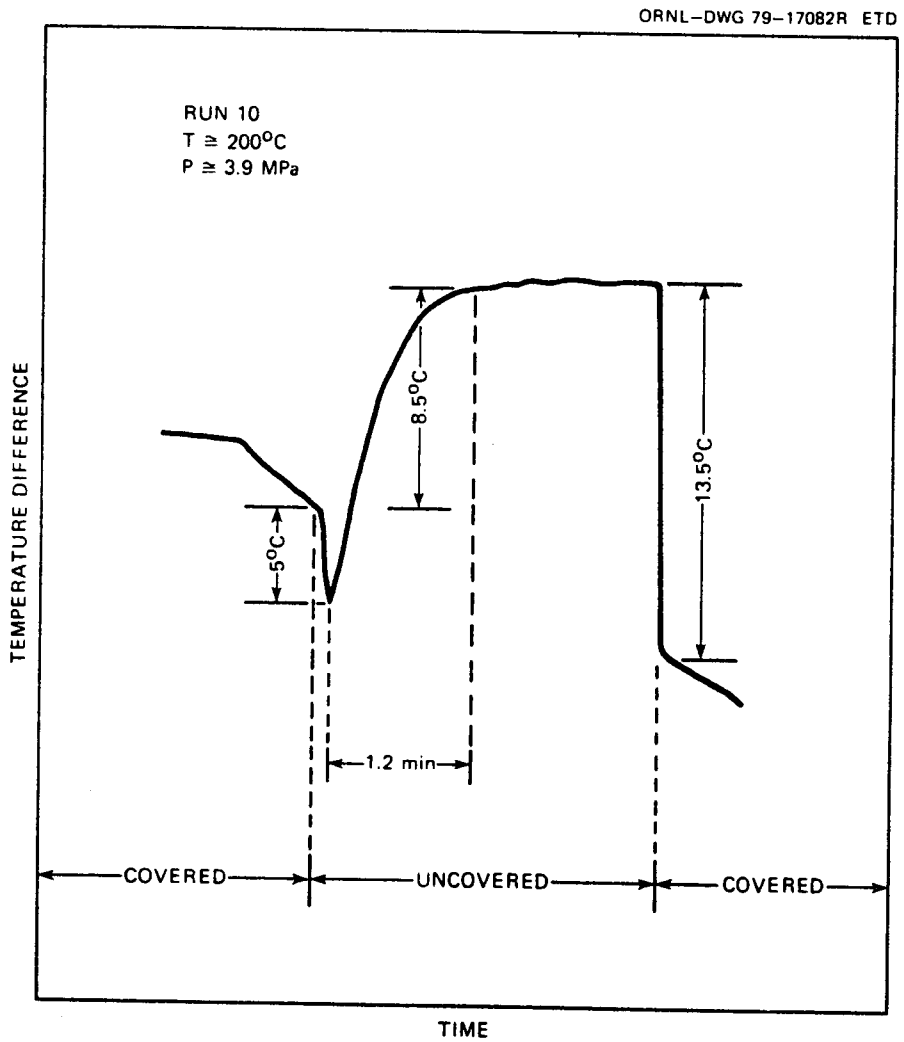

Fig. 6. Results of feasibility study tests with ORNL prototype heated junction thermocouple with constant current heater power.

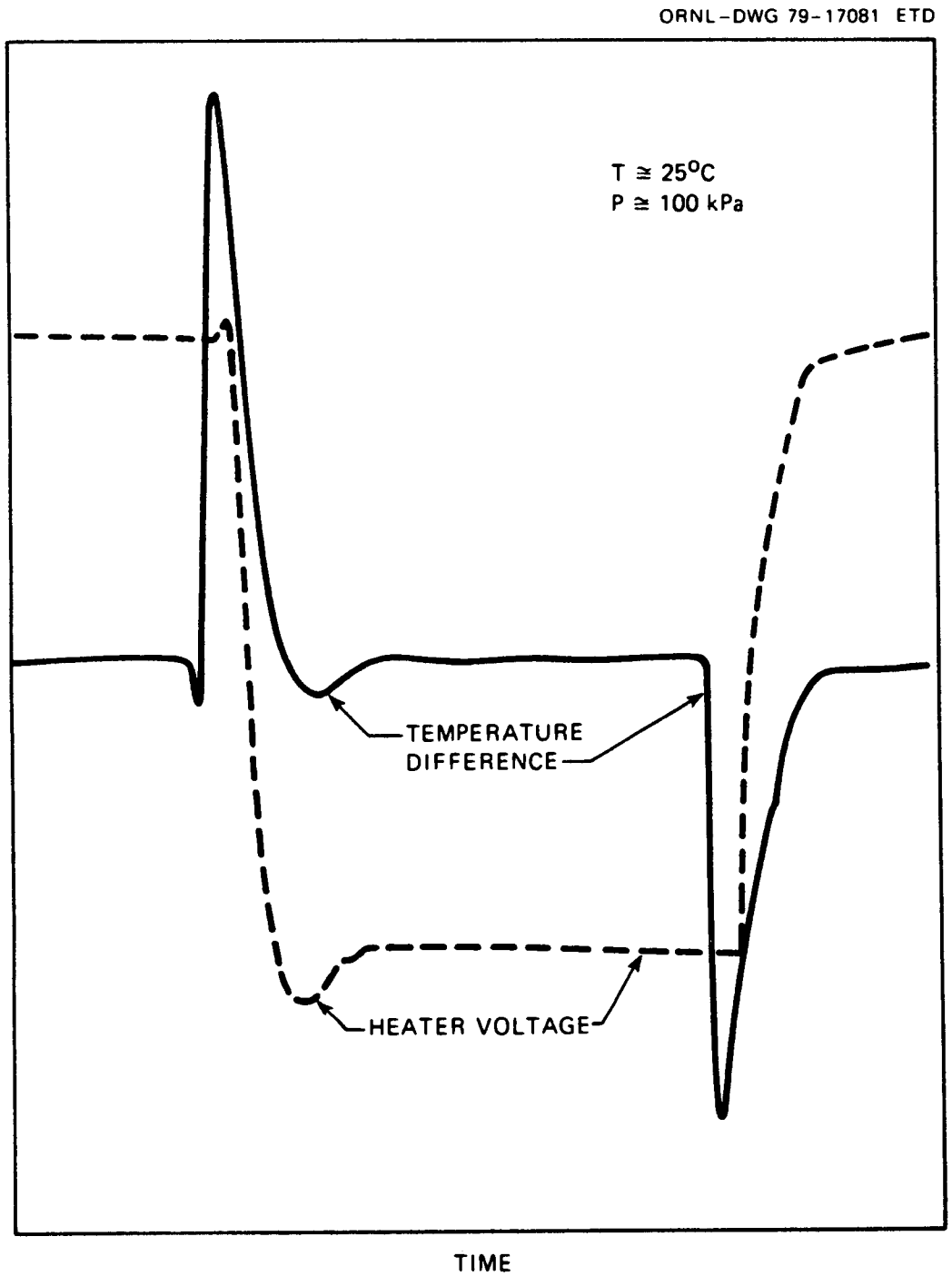

Fig. 7. Results of ORNL tests with prototype heated junction thermocouple and proportional controller to maintain constant differential temperature (solid line). The level is indicated by a change in the heater voltage (dashed line).

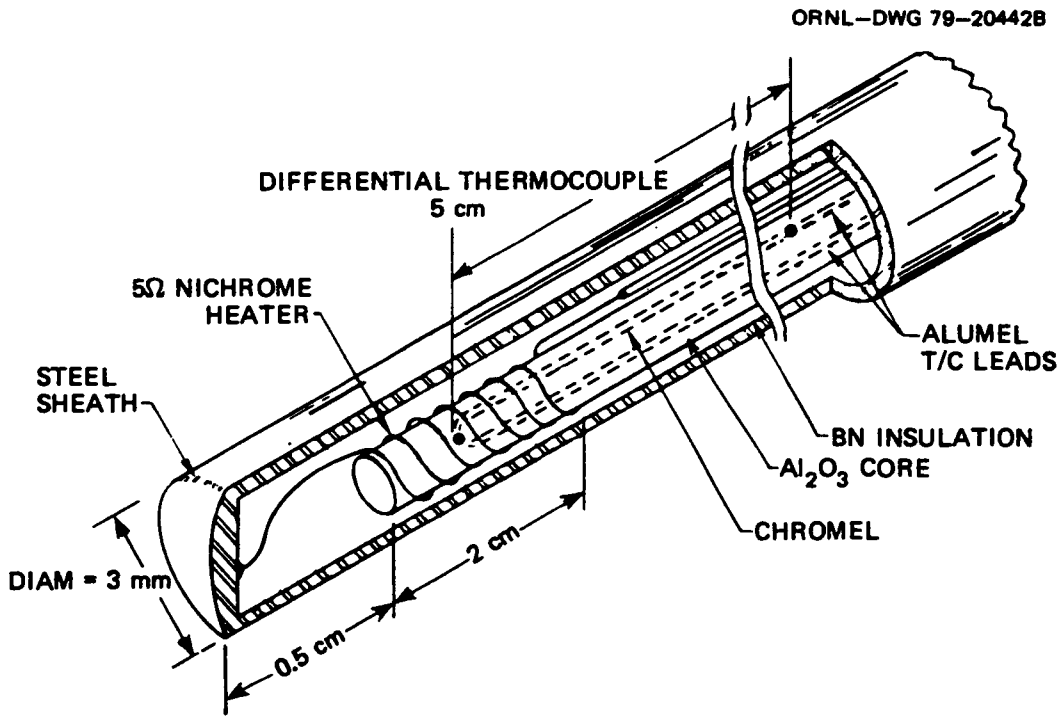

Fig. 8a. Schematic drawing of second generation heated thermocouple level sensor fabricated at ORNL.

clearly indicate presence of liquid or steam surrounding the sensor at a variety of temperatures and pressures. Test series 2 showed that an unshielded sensor indicated the presence of liquid in two-phase mixtures up to almost 100% void fraction. These results led to the design of a "splash shield" to protect bare sensor from films and drainage due to condensation and water droplets. Test series 3 was conducted to test effectiveness of the splash shield. Additional two-phase tests (series 4) were conducted at the THTF facility at ORNL under conditions considered more severe than would ever be expected in a PWR. The results of these tests showed that the HJTC with a splash shield change from indicating the presence of liquid to indicating the presence of gas in void fractions between 30 and 80%, depending on the conditions (mainly mass flow rate). Finally, test series 5 was conducted by C-E to show the effectiveness of a separator tube surrounding the sensors to provide a still well. These tests indicate that the sensor could reliably indicate the collapsed liquid level in the separator tube relatively independently of the void fraction in the test vessel. These tests were conducted at normal temperatures and pressure in air-water mixtures with various void fractions.

? Why? Both? splash & sep tube

III.A.2.b Phase II tests. Combustion Engineering conducted the Phase II series of experiments[24] to investigate the behavior of an HJTC probe assembly consisting of three HJTC sensors with splash guards mounted in a separator tube, under thermal-hydraulic conditions which simulate those that the instrument would be expected to perform under in normal and accident environments. The Phase I tests were considered to have established that the HJTC sensor could, in principle, measure water level at the temperatures and pressures expected in a PWR. The Phase II tests were conducted to assist in the design of a prototype assembly to be tested in the Phase III tests.

The objectives of the Phase II tests included:

1. Determine if the probe would respond to collapsed water level when the assembly was surrounded by a two-phase steam-water mixture at high pressure.

2. Determine if the probe would respond to collapsed water level during a rapid depressurization.

3. Determine that the size of the vents in the separator tube were sufficiently large so that the collapsed water level inside the tube could follow rapid changes in liquid level outside the tube.

4. Determine the response time of the HJTC sensors and probe assembly at various pressures.

5. Confirm that the range of the heater power control was sufficient for positive output of the HJTC over range of pressures.

The probe assembly was installed in an autoclave in which the pressure and temperature were controlled and the level of either single- or two-phase liquid could be raised or lowered. The liquid level in the autoclave was measured with a differential pressure gauge. A gamma densitometer was used to measure the void fraction outside the separator tube at the same vertical height of the test vessel as the location of the middle HJTC sensor. The uncertainty in the water level in the worst case was about ±2 in.

Agreement between the HJTC sensors and the d/p level measurement showed that the separator tube was effective in providing a single-phase water level inside the tube when surrounded by a two-phase mixture in a pressure range from 0 to 1450 psig. Blowdown tests were also conducted from an initial pressure 1875 psig. Under high depressurization rates between 4-10 psi/s, flashing inside the separator caused the sensors to respond to the two-phase mixture inside the separator tube. The HJTC system is not expected to respond during the initial blowdown period, which is expected to last for about 100 s in a PWR. At lower depressurization rates of 1-2 psi/s considered typical of the period immediately following the rapid blowdown, the HJTC probe again agreed closely with the d/p level measurement.

The time delays which occur after the water level uncovers the sensor and the sensor heats to indicate an uncovered state depends on several factors: the rate of drainage from the separator tube and splash shield, evaporation of the liquid film that remains on the surface of the sensor, the heat transfer coefficient of the surrounding gas, and the power applied to the heater. The total effect of all these effects did not adversely affect the time response even with a heater power less than expected to be used in system installed in reactors. Repressurization was observed to cause a brief decrease in output due to condensation of water on the sensor. For the rate of repressurization which C-E estimates could occur in a PWR, a change in the HJTC output due to condensation on the sensor could not reach a point at which it would indicate that it was covered. This will be tested further in the Phase III experiments. In summary, the Phase II experiments confirmed that the HJTC probe assembly responded correctly to all thermal-hydraulic conditions which might be expected to occur in a PWR.

III.B Analyses of System Performance

At the request of the NRC staff, C-E performed a series of small break LOCA calculations employing an approved small break model[25]. These calculations were reviewed by the NRC staff[26] and the results of their review relevant to ICC instrumentation will be summarized here.

Small Break LOCA Characteristics

Depressurization of the RCS and loss of coolant inventory depend on:

1. Energy and mass lost through the break,
2. heat removal from the system by the steam generator, and
3. characteristics of the safety injection pumps.

The analyses identified three regimes, 0.1 to 0.5, 0.02 to 0.1 and 0.0005 to 0.02 ft^2 small break LOCAs for which the system response governed by the size of the break is different. C-E performed analyses for 0.1, 0.02, and 0.005 ft^2 breaks.[25] Because more serious consequences occur as a result of multiple failures, small break analyses were also performed for these regimes of small breaks including: (a) assuming loss of feedwater to the steam generator and, (b) loss of feedwater with a stuck open PORV.

0.1 ft^2 Small Breaks

With a break of 0.1 ft^2, the RCS depressurizes rapidly (27 s) to the setpoint where the HPI system will begin to operate 30 s later. The energy loss from the break is greater than the decay heat and heat can actually be absorbed into the primary system through the steam generator. The system depressurizes below 300 psia after 30 min, but remains above the safety injection tank setpoint of 215 psia. During this period, the mixture height falls to below the top of the core at about 14 min into the accident with the system pressure near 400 psia. The decreasing system pressure allows increased HPI flow while at the same time reducing the loss of coolant through the break. As a result, there is a net increase in coolant inventory and the core is recovered at about 34 min with the system pressure at about 250 psia. During the period of core uncovery, the mixture height falls about 2 ft below the top of the core resulting in a peak clad temperature of 570° (1059°F).

A second series of calculations was carried out with a 600 psia setpoint for the safety injection tanks. In this case, injection occurred before core uncovery with the mixture height about 2.5 ft above the core and mixture level recovered to about 5.5 ft during the remainder of the transient.

In the case of the first transient, the SMM of the ICC system would follow the depressurization to saturation, the fall of the mixture level to the top of the core and heat up of the fuel cladding. Without vessel head level measurement, the operator would have to depend on indirect indications of the coolant inventory from about 1 min into the transient until the core began to uncover about 13 min later to decide if auxiliary cooling should be started manually. In the second case, because the core does not uncover, the operator would have no direct indication of the safety injection tank's effectiveness without a measure of the vessel level.

0.02 ft^2 Small Breaks

With a 0.02 ft^2 break, the system depressurizes to the HPI setpoint in about 108 s. At 1100 psia, liquid is discharged from the system until about 26 min when a two-phase mixture begins to be discharged. The system depends on some heat removal capacity of the steam generator until about 42 min into the transient. Because less coolant is lost through

the smaller break, and the input from the HPI, the mixture level remains 5 to 6 ft above the top of the core throughout most of the accident. Between 25 and 26.5 min the level drops to within about 2.5 ft above the core.

Because with this break size the system has a greater dependence on heat removal through the steam generator, a further analysis was made assuming a loss of feedwater to the steam generator. The sequence of events for this accident is considerably different than the one previously analyzed. The analysis showed that long term uncovery of the core with excessive cladding temperatures is probable unless the operator activiates the auxiliary feedwater system before about 30 min.

In this case, following the trend of the reactor vessel inventory would indicate to the operator that excessive coolant was being lost from the system and some action was required (in this case activating the auxiliary feedwater system). Again the parameter of interest in this case is the reactor vessel level, so that a direct measure of level in the vessel head region would supply the operator with the clearest indication that action was required.

0.0005 ft^2 Small Breaks

With a 0.0005 ft^2 (0.3 in diam) the system depressurizes to the reactor trip level (1720 psia) in about 1 h. After further pressure reduction to the HPI setpoint, the net result is a drop in mixture level in the reactor head of about 2 ft and the core remains well covered throughout the accident.

With loss of feedwater, so that no heat removal is obtained from the steam generators, the system pressure generally remains high and the PORV opens at 2500 psia and the system pressure stabilizes at this point. Continued heating of the coolant by the decay heat in the core will result in steam formation in the core after about 45 min. Throughout this scenario, the system pressure remains high so that HPI is not initiated and RCS inventory is lost through the break as well as the PORV. If no operator action is taken, core uncovery begins at about 67 min into the accident. Reactor vessel level measurement would allow the operator to manually start HPI to avoid core uncovery.

Loss of Feedwater and Stuck Open PORV

This scenario resembles that described above for the 0.0005 ft^2 break with loss of feedwater. The system pressure is not reduced to activate HPI before significant core uncovery (8.3 ft) and peak cladding temperatures of 1115°C (2040°F) occur, unless the operator takes some action. Core uncovery is not calculated to start before about 1 h to 17 min, so that there is sufficient time to initiate recovery measures if the symptoms are properly analyzed. A two-phase mixture develops in the reactor vessel at about 51 min and the level decreases to the top of the

core in the next 25 min. In this particular transient the expanding coolant in the core tends to force the pressurizer to fill with liquid or a low void fraction mixture.

In this case after saturation has been reached and voiding begins in the core, the only indication which will unambiguously follow the course of the loss of coolant and recovery is a level measurement in the vessel head.

In the cases analyzed above, an unambiguous indication of reactor vessel water level when combined with the existing SMM and CETs will provide the operator with an integrated indication of the conditions of the coolant within the reactor vessel. In particular, in the smaller break analyses, there are significant periods during the course of the transients where reactor vessel level will provide the most direct and unambiguous indication of the state of the RCS.

III.C System Qualification

Qualification programs for the ICC detection system instrumentation have not been completely defined by the applicants. However, in general, the following three catagories of ICC instrumentation will require qualification:

1. Sensor instrumentation within the pressure vessel.

2. Instrumentation components and systems which extend from the primary pressure boundary up to and including the primary display isolator and including the backup displays.

3. Instrumentation systems which comprise the primary display equipment.

An example of a qualification program for each classification is given below. This example is taken from the submission of Southern California Edison for their San Onofre Units 2 and 3.

Design of the in-vessel sensors must meet the guidelines of Appendix B as well as the clarification and Attachment 1 to Item II.F.2 in NUREG-0737. Specifically, instrumentation must be designed to meet appropriate stress criteria when subjected to normal and design basis accident loadings. Seismic qualification to safe shutdown conditions will be necessary to verify functionability after seismic loadings.

The out-of-vessel instrumentation system, up to and including the primary display isolator, and the backup displays would be environmentally qualified in accordance with IEEE-323-1974. Plant-specific containment temperature and pressure design profiles should be used where appropriate in these tests. This equipment must also be seismically qualified according to IEEE-STD-344-1975. CEN-99(S), "Seismic Qualification of NSSS Supplied Instrumentation Equipment, Combustion Engineering, Inc." (August 1978) describes methods which can be used to meet these criteria.

It is not necessary that the primary display be designed as a Class 1E system, but it must be designed for high reliability; thus it is not necessary that it be qualified environmentally or seismically to Class 1E requirements nor is it required to meet the single failure criteria of Appendix B, Item 2. Post accident maintenance accessibility should be included in the design. The quality assurance provisions of Appendix B, Item 5 do not apply to the primary display according to NUREG-0737. However, the computer driven primary system must be separated from the Class 1E sensors, processing and backup display equipment by means of an isolation device which is qualified to Class 1E criteria.

IV. EVALUATION OF HEATED JUNCTION THERMOCOUPLE LEVEL SYSTEM

The heated thermocouple liquid level sensor in its most basic form consists of a thermocouple with its measuring junction in good thermal contact with a source of heat. With a constant heat input, the temperature rise above ambient sensed by the thermocouple is an indication of efficiency of heat transfer to the surrounding medium. When the sensor is immersed in liquid water, for instance, the amount of heat which can be transferred away from the sensor is substantially greater than when the sensor is immersed in gaseous water vapor or steam providing the system is sufficiently removed from the critical point of water. Thus, even in its most elementary form, the heated thermocouple can provide a direct measure of the heat transfer efficiency of the surrounding medium.

In practice, a single junction thermocouple senses not only the rise in temperature caused by the heater, but also the temperature of the surrounding medium. To determine the increase in temperature a measure of the ambient temperature is required and this is commonly provided by adding a second thermocouple junction close to the heated junction, but sufficiently far away to provide a measure of the ambient temperature independent of the influence of the heater. As a simplification, the two thermocouples can be connected in opposition, so that the differential output is a direct measure of the temperature rise due to the heater, independent of the ambient temperature.

A desirable feature which was incorporated into the design of the sensor to make two thermocouples independent of each other from the active portion of the sensor to an external connection panel. By switching, the thermocouple pairs can not only be connected in opposition for differential temperature measurements, but each thermocouple can also be measured to provide temperature indications at additional locations within the reactor vessel.

Combustion Engineering in their December 21, 1979, report,[27] evaluated the system and stated that the system has the following advantages of: adaptability to operating reactors; compatibility with other methods for measuring level; redundant; non-hydraulic; and no moving parts. The following were considered disadvantages: removal of either in-core instrumentation or partial length control rods might be required (some reactors have spare control rod drive ports; resolution is limited by nozzle port dimensions and/or spare containment electrical penetrations; level is not monitored to the bottom of the vessel, nor within the core.

The heated junction thermocouple system proposed by Combustion Engineering consists of two detector strings. These strings will be installed in two new penetrations in the in-core instrumentation nozzle flanges. Two channels of level indication will be provided by pairing the detector strings. Each string will have eight sets of two thermocouples, one set at each discrete vertical location. The two thermocouples at each location will be connected in series but in electrical

opposition to each other. One of the thermocouples will be electrically heated. With the system of thermocouples, level indications will be generated which will be sent to the display system in the control room. This display includes two channels of the eight discrete sensor positions and the maximum unheated junction temperature in each channel. The back-up display will include the temperatures of the heated and unheated thermocouples at each of the eight locations. Trending information will be available on strip chart recorders.

As a result of experimental work, ORNL concluded[19] that reliable level indication will be obtained with a heated junction thermocouple system if the probes are shielded from splashing and coolant flow velocities are not very high. INEL[28,29] demonstrated an economical and simple level measuring system consisting of a heated junction thermocouple system with controller, microprocessor and software. Fast response time, radiation resistance, durability, reliability, self-protection and abnormality diagnosis capability are considered as proven advantages for this system. During tests at ORNL with Combustion Engineering's system,[30] a rupture disk in the test loop accidentally blew out and the heated junction thermocouple was observed to track the resulting loss-of-coolant accident very accurately.

Following the conclusions of both ORNL[19] and INEL[28] that a heated junction thermocouple sensors should be provided with splash shields around the probes, Combustion Engineering incorporated such shields in their design. The measurement system provides separate readings of both the differential output of the heated and unheated junctions as well as the output of the unheated junction. The ICC display system uses the output of the unheated junction to supplement the resistance temperature detectors in the hot and cold legs for the calculation of subcooling margin. In some respects the HJTC provides an additional in-vessel temperature measurement system with more vertical resolution than the core-exit thermocouple system and has the advantages of top entry.

The addition of the splash shields overcame a major disadvantage of the heated thermocouple monitoring system which arose from its basic principle of operation. The temperature differential signal generated by the heated vs unheated thermocouple pairs is a measure of the heat transfer coefficient between the probe and the coolant at the heated junction elevation. The behavior of the heat transfer coefficient between a heated surface and water under the various conditions to be found in the region above the core in a nuclear reactor is as follows:

* With the coolant in the liquid phase in a subcooled condition, the heat transfer coefficient is a function of flow rate and turbulence. Changes in the differential temperature signal will be opposite to the changes in flow rate.
* With the coolant in the liquid phase at saturated temperature or in a mixed liquid-steam phase with not very high quality such that nucleate boiling occurs at the probe surface; the heat transfer coefficient is independent of flow rate and steam quality. The heat transfer coefficient is higher than for nonboiling conditions. The

heat transfer coefficient is very sensitive to system pressure. The differential temperature measured by the HJTC will reflect system pressure changes.

* With the coolant in a mixed liquid-steam phase with very high quality such that thin liquid film boiling occurs at the probe surface; the heat transfer coefficient steadily increases with quality and flow rate. When dryout occurs at the probe's surface, the heat transfer coefficient decreases suddenly.

* With the coolant is a superheated steam condition; the heat transfer coefficient is low but increases with steam velocity. Changes in the differential temperature signal will be opposite to changes in the flow rate. At sufficiently high steam velocity, the differential temperature signal will be equal to the differential temperature signal for low velocity liquid phase flow.

Consequently it is expected that:

* With the primary pumps not running, the differential temperature signals can unambiguously indicate the gradual uncovering of the probe's thermocouple pairs in the vessel head. At levels just above the core exit, an unshielded heated junction thermocouple might not be able to distinguish between high velocity steam resulting from an uncovered, inadequate cooled core and a liquid covered probe. This ambiguity has been resolved in the Combustion Engineering system by the addition of a shroud to surround the individual shielded heated junction thermocouple sensors. The shroud provides a collapsed liquid level under two-phase flow conditions.

* With the primary pumps running, the shielded and shrouded heated junction thermocouple sensors can detect a gradual voiding of the circulation coolant by measuring the collapsed liquid level inside the shroud. (See Sect. III.A.2.b, C-E Phase II tests, above.)

* On approaching dryout at the probe's measuring points, the differential temperature may briefly decrease due to film evaporation. On dryout, the differential temperature signal will suddenly jump and provide an unambiguous indication of lack of liquid at that point. Even though the signal due to the effect of film evaporation is in a direction opposite to that indicating loss of coolant, the change is rapid, and gives a characteristic dip in the curve which recovers rapidly. The rate at which this effect occurs is a function of the heater power supplied to the heated junction thermocouple heater and with a power density approaching the decay heat of the fuel, would be of such short duration as to be insignificant. With high power density, however, a significant area of concern is the lifetime of the heating elements with regard to aging and power supply control.

IV.A Evaluation of Heated Junction Thermocouple Level System against NUREG-0737, Appendix B

One requirement of NUREG-0737 is that the heated junction thermocouple level measurement system be evaluated with respect to the requirements set forth in Appendix B of NUREG-0737. (cf. Appendix A, this document)

1. Combustion Engineering has included responses to items 1, 16, and 17 in their documentation of ICC instrumentation.[22] The remaining items in Appendix B are plant specific and must be evaluated for each plant.

IV.B Evaluation on the Basis of Instrumentation Considerations

1. Installation Specific

   a. Requirements on operators.

      It must be shown that the system does not present confusing or ambiguous information to the operators or information which requires an excessive amount of interpretation by the operator. The display should be human-factor designed so that the operator has clear and rapid access to the pertinent information. The information available in the display should be unambiguous and self-sufficient. There should be no need for the operator to seek help from procedures to interpret the displayed information. It is assumed that the operator has been trained in depth and understands the operation of the plant. Trend capabilities, direct readouts, hard-copy capabilities and alarms should be available to the operator. Display panel redundancy should also be provided, but not in such a way as to confuse the operators.

      The C-E HJTC system places minimal requirements on the operators. Under most conditions step change in output is clear indication of phase change. Both Combustion Engineering and ORNL tests have shown that with high flow rates and high void fraction, the unprotected heated junction thermocouple does not give an indication of coolant inventory. The proposed probes, however, have multiple protection against flow effects with the splash shields surrounding the individual sensors, the separator tube that surrounds each assembly of eight sensors, and the guide tube that prevents bubbles from entering the separator tube. Analyses were requested to indicate the reaction of the heated junction thermocouple system during various accident scenarios: (1) small (1 and 3 in.) breaks in cold leg, (2) small breaks in hot leg, (3) opening of the pressurizer relief valves, (4) break in the upper head, and (5) voiding in core with filled upper head and flow reversal. These are summarized in Sects. III.B and IV.D.4. In addition, C-Es Phase III testing program will subject a full

scale model of the probe assembly to high void fraction water-steam mixtures. The report of the Phase II testing program on a prototype assembly is summarized in Sect. III.A.2.b. The only anomalous behaviors found in the testing programs were formation of a two-phase mixture inside the separator tube during a rapid depressurization (blowdown) and condensation on the probe during a repressurization. Both of these effects were of short duration and the HJTC sensors recovered rapidly.

We find that the heated junction thermocouple reactor vessel level measurement system meets the requirement of providing an unambiguous indication of collapsed water level in the reactor vessel head. The C-E Qualified Safety Parameter Display System (QSPDS) and Critical Functions Monitoring system (CFMS) have been described as a part of the C-E Accident Monitoring System (AMS) in the Combustion Engineering CESSAR-F submittal.[16] C-E considers this a generic description of the complete AMS. Individual plants may not choose to install the complete system, and thus the presentation of the ICC instrumentation indications will need to be reviewed for each plant. In our opinion, the generic description of the ICC related portion of the AMS meets the requirements of this consideration.

b. In-situ calibration (self calibrating, calibration cycles, etc.).

A specific and detailed calibration procedure shall be required. A system which is self-calibrating or self-verifying will be preferable. The reliability and accuracy of the sensor indications should be verifiable at any time during normal operation without interruption of reactor service. It is expected that routine calibrations will be carried out as a part of normal plant maintenance.

Jim W.

Detailed calibration procedures will be included in each plant's operating procedures and must be reviewed separately. The proposed system is stated[31] to include automatic on-line surveillance tests such as varying the heater power to the sensors (see also Sects. IV.D.7, 8 and 10).

c. Redundancy or diversity.

Sufficient redundancy should be demonstrated to assure the availability of the reactor vessel coolant level monitoring system when needed. Correlation of level instrumentation indications with the indications of other plant sensors and instrumentation to provide system diversity shall be described.

The redundant system proposed by Combustion Engineering has two complete independent detector strings and displays.
Coolant temperature indications are obtained from the unheated junctions of the HJTC and can be also be input to the SMM.

Coordinated displays of the ICC instrumentation is provided by both the QSPDS and the CFMS, which included other relevant plant indications. The generic system meets this requirement. Deviations will be reviewed separately.

d. Output during normal operation.

An output during normal reactor operation should be included as a feature of any reactor vessel coolant level system. Such information need not be essential to the operation of the plant, but the output must be such that the functioning of the reactor vessel coolant level system is clearly demonstrated. The principle function of the system is to indicate vessel liquid level, but related secondary outputs should also be indicated on or near this display, i.e., core exit temperatures, status of the system pumps, etc.

Temperatures measured by the unheated junction can be displayed and are also input into the saturation monitor system. Indications from all of the ICC instruments are included in the QSPDS and CFMS displays. The system meets this requirement.

e. Ease of retrofit or replacement.

Retrofit and replacement are really two different operations, but because they require similar considerations in design, they are lumped together here. Installation of a reactor vessel coolant level system to an existing reactor vessel should require a minimum of modification for retrofit, and the design should allow replacement during normal refueling operations, if necessary.

This is somewhat more difficult to provide for the HJTC system than for less intrusive systems, since some modification of upper head internals is required, but C-E appears to have satisfactory solutions.

f. Interference with refueling.

Installation of the reactor vessel coolant level system should not impair the refueling operations.

Once installed, the HTJC probes should have no greater impact on refueling operations than the core exit thermocouples installed in vessel head.

2. Sensor and Transducer Specific

a. Environment qualification.

Effect of the containment environment, such as steam in the containment, must be minimized. It must be shown that if steam

is released (vented) into the containment areas, the post-accident monitoring capabilities of the system are not jeopardized. The system should withstand the design basis accident environment in the containment.

The system qualification plans are summarized in Sect. III.C. These appear to be adequate. Any deviations will be reviewed separately.

b. Accuracy and resolution.

The accuracy and resolution of the proposed reactor vessel coolant level system must be shown to be adequate to identify a situation which could lead to inadequate core cooling.

The resolution is limited by the number of sensors which can practically be installed. At present, with eight sensors per train, the spacing may be between 15 and 30 cm. Resolution of individual sensors is generally better than 2 cm. The spacing and location of the individual sensors is stated to be plant specific (see Sects. IV.C.11 and IV.C.27).

c. Response characteristics.

It must be shown that the time of response of the proposed reactor vessel coolant level system is adequate to sense the effects of an approach to core uncovery in sufficient time for the operator to take corrective action to prevent core damage and to monitor the recovery from the accident on a timely basis.

The response characteristics (time response) were addressed by C-E and is discussed in Sect. IV.C.12, below.

3. Accident and Post-accident Monitoring

a. Effects of core uncovery.

The effects of uncovery must be known and if the response of the sensor changes, the changes should not impair the functioning of the reactor vessel coolant level system.

No effects of core uncovery are expected directly on sensors, since they are located above the core and will be qualified to 1260°C (2300°F).

b. Effects of internal movement.

The effects of possible internal movements due to core damage must be known or predictable and recalibration during the post-accident period should be possible.

There should be no effects of internal movements in the core on sensors installed outside the core region. Inside the core

region survivability is questionable since movement of core could tear sensors apart, however, the proposed system does not use in-core sensors.

c. Effects of pressure changes.

It must be shown that the effect of pressure excursions or transients will not adversely affect the ability of the reactor vessel coolant level monitoring system to perform its function after such a transient.

Rapid depressurization can create a two-phase mixture inside the separator tube, but this is expected to collapse quickly relative to the time needed to observe ICC. Very rapid depressurization is outside the small break regime.

Condensation on sensor due to repressurization can cause a brief depression of the indication of the uncovered sensor, but with adequate heater power, this moisture is quickly evaporated and the sensor recovers. See Sect. IV.C.6. There are no direct pressure effects on the sensors.

d. Effect of flow variation.

The effects of flow and flow direction must be shown not to adversely affect the effectiveness of the reactor vessel coolant level system. A change in flow path or flow velocity due to partial core blockage should not adversely affect the reliability of the level measurement. An estimate of these effects should be provided.

An unshielded sensor is sensitive to the heat transfer coefficient. Flow of fluid past the sensor would decrease the differential temperature and, hence the output of the HJTC. Early tests at ORNL[32] in a low temperature flow calibration loop showed that even at low power, the HJTC would detect flow rates as low as 0.03 m/s (0.1 ft/s). This should not be surprising since this principle is the basis for a number of commercial flowmeters. The inclusion of the splash shield greatly reduced the sensitivity to flow in the THTF tests[31] where the sensor was shown to be capable of detecting high void fraction up to velocities of 3 m/s (10 ft/s).

In the C-E probe design, the HJTC sensors are protected against flow effects by individual shields on each sensor, the separator tube, which is only perforated at the top and bottom, and the guide tube, which is perforated along its entire length. In addition the perforations in the guide tube and the separator tube do not match, resulting in a "light-trap" arrangement. Thus, the HJTC sensor is triply shielded against flow. High velocity flow is not expected to occur in the head region, except, perhaps, in the case of an upper head break. At worst,

Table 2. Index to discussion of specific concerns

		Section-Page
1.	Dynamic effects	
a.	possible ambiguous indication with pumps on/off	IV.C.1-44
b.	coolant must be quiescent	IV.C.2-46
c.	effect of voids in vessel	IV.C.3-50
d.	indication when voiding in core, upper head solid	IV.C.4-50
e.	two phase mixture in the upper head	IV.C.5-56
f.	repressurization effects	IV.C.6-56
2.	Other error sources	
a.	on-line test procedures	IV.C.7-60
b.	how will operatonal availability be determined?	IV.C.8-61
c.	location and display of ICC instruments in control room	IV.C.9-61
d.	identification of malfunctioning components	IV.C.10-62
e.	system accuracy	IV.C.11-62
f.	system response time	IV.C.12-62
3.	Man-machine interface	
a.	display of sensor status	IV.C.13-63
b.	display units	IV.C.14-63
c.	parameter calculated from sensor inputs	IV.C.15-64
d.	does operator have a well defined set of signals to guide emergency response?	IV.C.16-65
e.	operator may have too much information (are there too many instruments?)	IV.C.17-65
f.	do emergency procedures enable operator to avoid misunderstanding?	IV.C.18-65
4.	Other concerns	
a.	emphasis on RVLM system may have confused real diagnosis requirements	IV.C.19-65
b.	system is scenario dependent	IV.C.20-66
c.	system is not relevant to TMI-2 type of accident	IV.C.21-65
d.	definition of ICC	IV.C.22-66
e.	maximum break size	IV.C.23-67
f.	survivability after large break LOCA	IV.C.24-69
g.	how do core exit thermocouples estimate core uncovery?	IV.C.25-71
h.	normal in-service life	IV.C.26-75
i.	spacing of HJTC sensors	IV.C.27-75
j.	heater power	IV.C.28-76
k.	set point for HJTC signals	IV.C.29-77

only one probe assembly would be affected in this case, since the two probe assemblies are widely separated in the upper internals. An upper head break large enough to cause flow of sufficiently high velocity to affect the indication of the protected HJTC sensors would probably fall outside the small break range for which the instrumentation is intended. C-E will be requested to provide their own analysis of the possible effects of an upper head break accident on the HJTC level probes. Although the HJTC system is intended to be used with the reactor coolant pumps off, a question has arisen about the behavior of the HJTC probe in a voided system with the reactor coolant pumps running. This is an open issue that will be explored further with C-E (see Sect. IV.C.1 and 2).

e. Ability to measure water quality.

It would be advantageous to have an indication of water quality, or void fraction in evaluating the cooling capability of the coolant remaining in the vessel. While this is not a required feature of the reactor vessel level monitoring system, it should be shown if and how water quality affects the output of the proposed system.

The heated junction thermocouple sensors are relatively insensitive to water quality.[34] With the shield and separator tube, the HJTC measures collapsed liquid level in the vessel head. If it assumed that the vessel is filled with a two-phase mixture, for instance with pumps running, then the collapsed liquid level measured by the HJTC probe will provide an indication of water quality (see Sects. IV.C.1, 2 and V.A.1.a).

IV.C Information Quality

In this section we will attempt to address the concerns expressed by ourselves and others with respect to the quality of information derived from the ICC instrumentation systems. One explicit requirement for these systems is that the information shall give the operator "an unambiguous indication of an approach to inadequate core cooling."[5] This has been the central issue in the evaluation of the ICC instrument systems, but in particular the reactor vessel level measurement systems, since they are new instruments. In this section, concerns with respect to the quality of information derived from the ICC instrumentation systems are addressed, that is, possible causes of ambiguity, sources of error, and reliability.

A number of questions arose during the cours of our review that were submitted to Combustion Engineering for clarification. The generic responses were published by C-E in CEN-181.[31] These are reproduced below with further comments when necessary. Many of these have already been discussed in preceding sections of this paper. To avoid redundancy, the discussions below provide numerous references to relevant points made elsewhere. Table 2 provides an index to locate particular categories.

Specific Concerns

IV.C.1 Possible Ambiguous Indication With Pumps On/Off

First, the NRC staff has issued recommendations to owners of plants from all three reactor vendors that the pumps be tripped when a small break LOCA is detected.[26,35-37] Mass flow anywhere in the reactor coolant system would be limited, therefore, to that within the small break regime (0.1 ft sq max). This maximum-sized small break is predicted to allow the mixture level to fall below the top of the core to after 13 min (See Sect. 1.B). After the depressurization period and upon reaching saturation, the vessel head may well be filled with a turbulent two-phase mixture. The HJTC level measurement system is expected to indicate collapsed liquid level in the vessel head under these conditions even with the pumps running.

At the NRC/Vendor/Utilities meeting held in Bethesda, MD on February 17, 1982, C-E described modifications made in the HJTC probes for System-80 plants and additional details of the operation of the HJTC probes for older operating plants. These changes are expected to have little or no effect on indications of water level when the primary coolant pumps are off, but have a significant impact on the indications when the pumps are running. It should be emphasized at the outset, that emergency guidelines recommend that the pumps be tripped in a LOCA accident to reduce the loss of coolant from the break. Running the primary pumps with voiding in the system due, for instance, to a loss of heat sink is also not recommended because of the possibility of damaging the pumps. The analyses described below were communicated during a telephone conference with C-E personnel. As such it represents an informal communication and final analyses remain an open issue for the time being.

C-E's analysis of the behavior of the HJTC probe depends on the plant design. The older operating plants have an installation configured as shown in Fig. 8b. The probe is installed in a CEA shroud. The CEA shroud extends from below the Fuel Alignment Plate (FAP) to about 1.5 ft above the upper guide structure support plate. An orifice in the bottom of the CEA shroud allows flow from the core exit region to the upper head. From the upper head, the coolant flows into the upper plenum.

With two-phase flow, the probe is expected to accurately indicate collapsed liquid level in the upper head region. There is no appreciable pressure drop across the CEA, since only about 1% of the total coolant system flow is routed through the entire assembly of CEA's. When the level falls below the upper end of the CEA shroud which protrudes into the upper head region, because of the flow entering the bottom of the shroud and overflowing into the upper head, the CEA shroud will remain full. Hence, if the collapsed level falls below the upper end of the CEA shroud the level indicated by the probe will be in error. With the pumps off, however, the probe will indicate level correctly. Again, it should be emphasized that maintaining the pumps on under these conditions is contrary to recommended practice.

Discontinuous phase!

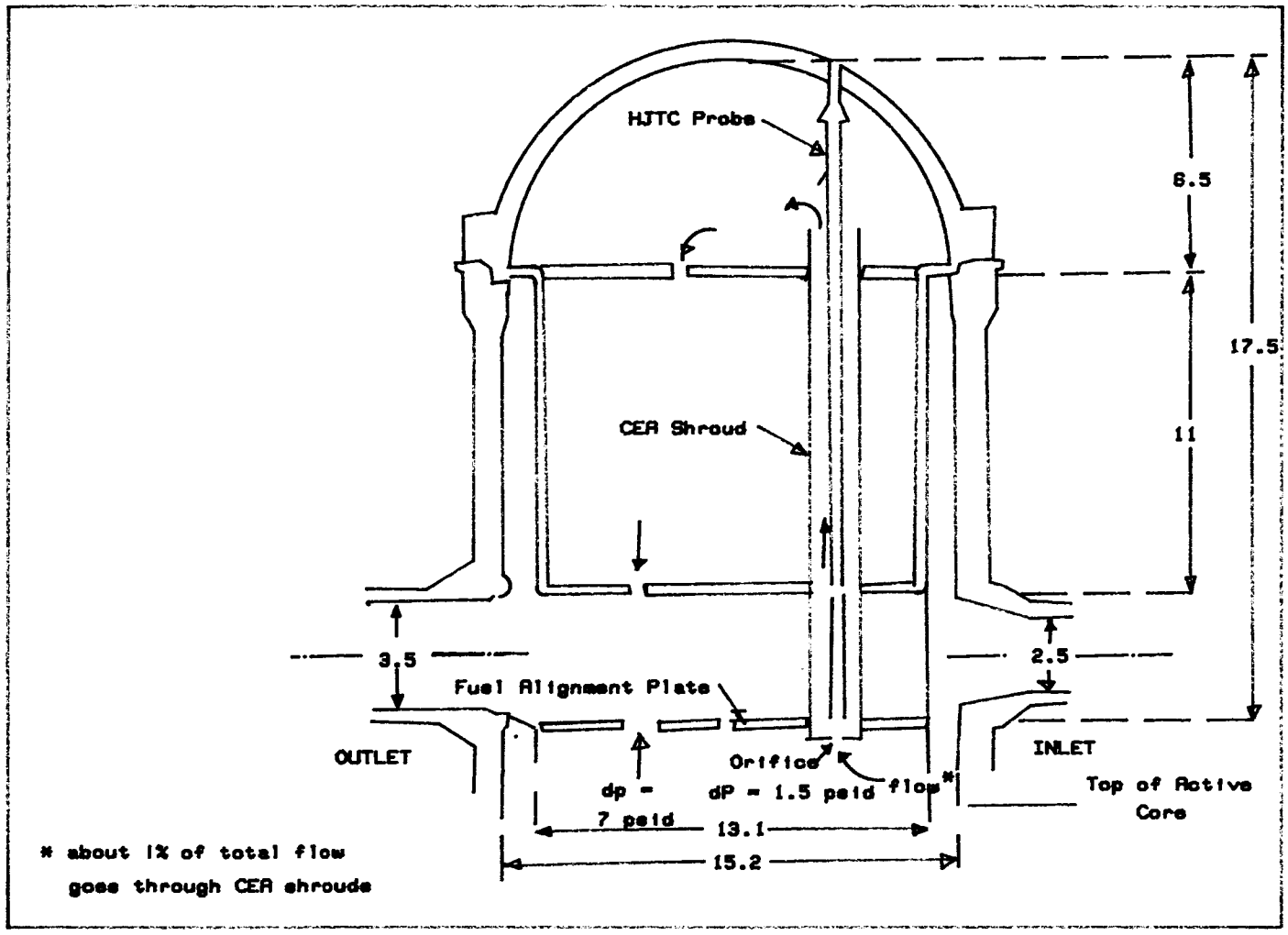

Fig. 8b. Drawing of HJTC probe installation inside CEA shroud in C-E operating plants.

In the C-E System-80 plants, the separator tube has been split at the upper guide structure support plate so that there are effectively two probes in the assembly; one section for the upper head region, and a second for the upper plenum (see Fig. 8c). Each section is expected to have four HJTC sensors; one each near the top and bottom of the space and the other two equally spaced between. In the case of two-phase flow with the pumps on, the upper head section of the probe is expected to indicate collapsed liquid level accurately. In the upper plenum, however, the pressure drop across the separator tube of the HJTC probe due to the flow through the FAP is expected to cause the section of the probe in the upper plenum to erroneously indicate nearly or completely empty. With the pumps off, the probe should indicate correctly. Maintaining the pumps on under these conditions would be an improper procedure.

IV.C.2 The Proposed Coolant Level Indicators Could Only Have Value Under Quiescent Conditions.

This concern is somewhat more general than the question of pumps on/off discussed above. The behavior of the system under other dynamic effects during the small break transient prompted a request for amplification from Combustion Engineering on this question.

Combustion Engineering was asked the following questions: Discuss the expected behavior of the level sensors and shroud surrounded by a high velocity two-phase mixture. In particular, discuss how the system is protected from the effects of high velocity steam entering the bottom ports of the shroud and creating a two-phase mixture within the shroud. If restrictions are placed in the bottom of the shroud to block the bottom drainage paths, discuss or show experimental evidence that there is still adequate drainage and response time.

Response

"The C-E water level measurement device consists of a number of HJTC sensors axially distributed inside a standpipe, called a separator tube. A functional schematic of the instrument probe is shown in Fig. 9. A sensor is made up of a heated junction, unheated junction, and a splash guard surrounding the heated junction thermocouple. The separator tube has holes at the bottom and top to allow water and steam to flow in and out. The purpose of the separator

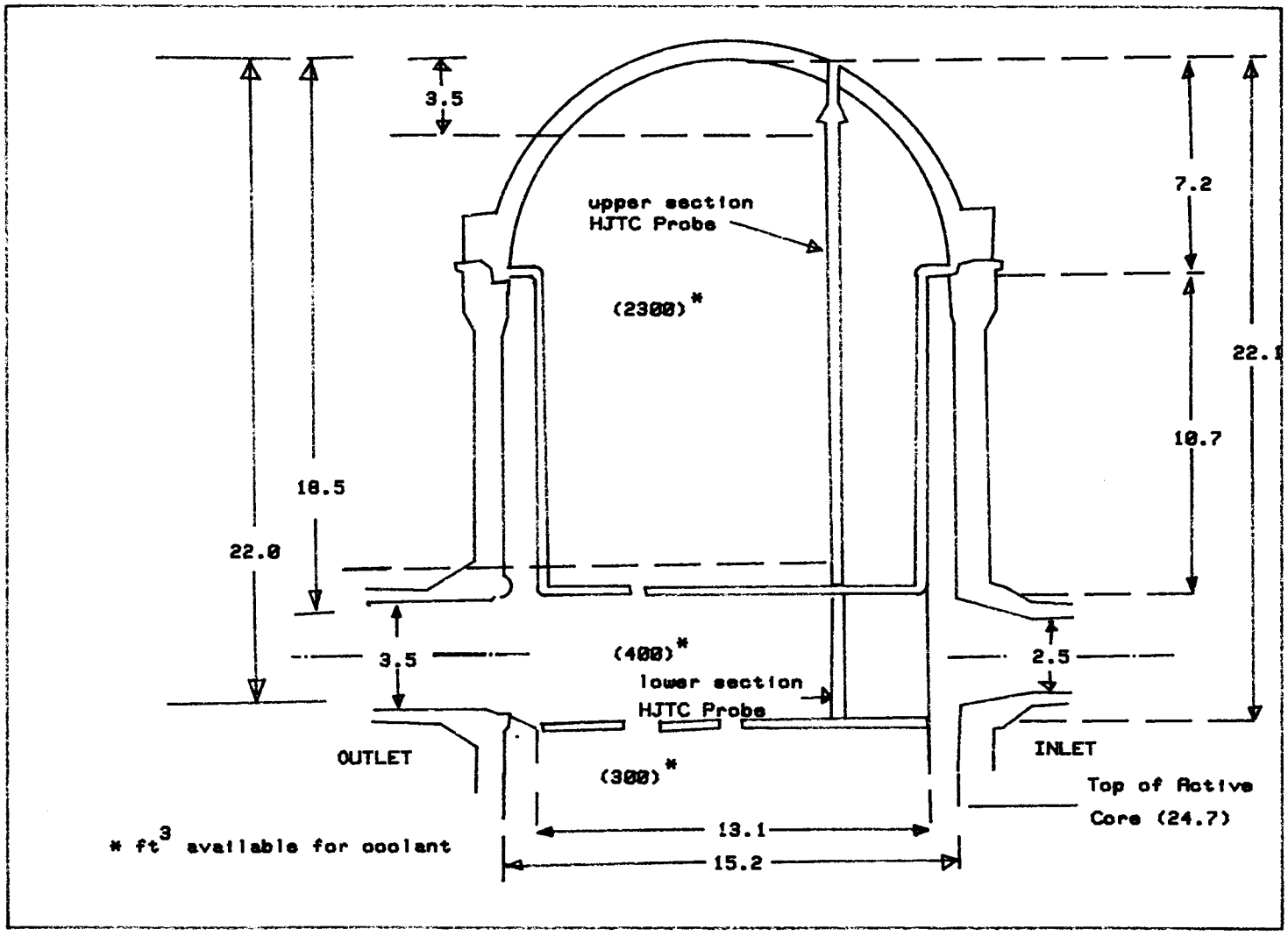

Fig. 8c. Drawing of split HJTC probe installation in C-E System 80 plants.

tube is to separate the steam and water phases and create a collapsed water level inside the tube when a two-phase mixture exists outside the tube. Thus, a region of nearly dry steam exists inside the separator above a region of all liquid. The sensors inside the separator tube measure the location of this steam-liquid interface as it passes the heated junction thermocouple elevation.

The separator tube is surrounded by another tube which provides a guide path and physical support for the instrument. It also aids in preventing steam bubbles from entering the separator tube. This guide tube is perforated along its entire length to enhance drainage. Slots in the guide tube at the top and bottom are offset axially from the holes in the separator. That is, the guide tube slots are slightly above the holes in the bottom of the separator tube so that they do not overlap (see Fig. 9). Thus, steam bubbles which may pass through the guide tube slots, are prevented from entering the separator since they would have to turn 180° downward in the separator - guide tube annulus to reach the separator tube holes. This would be particularly effective in a high velocity two-phase mixture. Small holes at the very bottom of the guide tube allow water below the slots to drain, but are too small to allow a significant amount of steam to pass through.

Tests (HJTC Phase II Test Program, see Sect. III.A.2.b above) have demonstrated the ability of the separator tube with the above described configuration to create a collapsed water level when surrounded by a two-phase mixture. The void fraction of the two-phase mixture ranged from 0 to 50%. These tests have also shown that drainage of the separator tube is not significantly impaired. The Phase II Test Report describes these tests and provides additional information. Therefore, steam is prevented from entering the bottom holes of the separator tube and creating a two-phase mixture without significantly affecting the drain rate of response time of the instrument.

This concern in our opinion should be relieved after consideration of the extensive test data. In the testing of the Combustion Engineering system reported to date, the HJTC system has performed predictably under transient and two-phase flow conditions. Phase II tests of the Combustion Engineering HJTC system have shown that the system provides an unambiguous indication of collapsed liquid level under all conditions associated with a small break LOCA.

A more specific concern in this category has been expressed that, the main value (sic. of the reactor vessel level instrumentation) would appear to be for conditions where the system has been depressurized and the coolant state is known, for example prior to refueling.

For scenarios of the small break LOCA that begin with depressurization, the period of depressurization is monitored by the saturation margin monitor. After saturation is reached, this is followed by establishment of a water level in the upper regions of the reactor vessel.

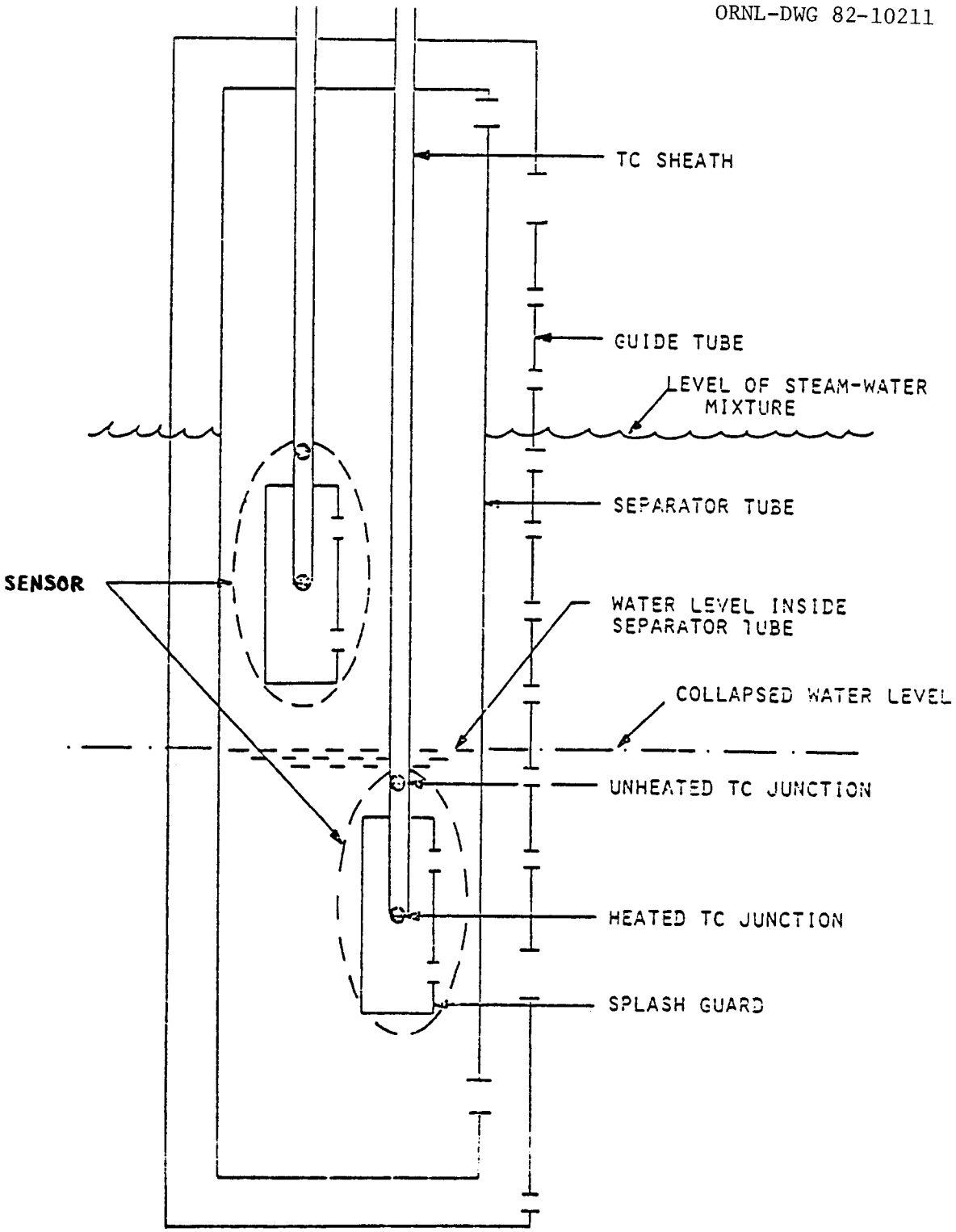

Fig. 9. Functional schematic drawing of the heated junction thermocouple probe assembly showing sensors and shields, the separator tube, and the guide tube (taken from ref. 22).

During the repressurization period the saturation margin monitor provides sufficient information about the condition of the coolant. Tests of both the heated junction thermocouple and differential pressure level measurement systems indicate that the two systems will be useful and in fact essential (see Sect. II.B) over a wide range of conditions." The effect of modifications to the separator tube design, however, is a new concern (see IV.C.1, above).

IV.C.3 Effect of Voids in Vessel

See Sect. IV.C.2, above

IV.C.4 Indication When Voiding in Core, Upper Head Solid

Combustion Engineering was asked to provide an analysis to determine if voiding can occur in the core of a Combustion Engineering reactor while the upper head is still filled with water. They were asked to analyze the extent of voiding which can occur and whether or not it can lead to ICC. They were asked to analyze the effect on the core exit thermocouples should such an event occur and to describe how ICC conditions would be determined under these conditions. SEMISCALE tests S-UT-2, S-UT-5, and S-UT-7 were referenced as exhibiting such behavior. The response of Combustion Engineering to this concern is given below.

Background

Figure 10 is a vessel diagram for a typical C-E PWR. The location of the core exit thermocouple (CET) is shown in relation to the upper head, upper plenum, and core. An instrument thimble assembly is routed through the upper head, through the instrument support plate and into an instrument tube. The instrument tube extends from the upper head through the upper guide structure support plate and surrounds the thimble in the upper guide structure support plate and surrounds the thimble in the upper plenum region. Figure 11 illustrates the details of the CET position and the paths for communication of core coolant. The CET is located just above the fuel alignment plate inside the instrument thimble which is inside the instrument tube.

Of concern is the possibility that there may be coolant held in the upper head due to slow draining during a time when the core is experiencing inadequate core cooling (ICC). Upper head draining occurs through the CEA shrouds, instrument tubes, and holes in the upper guide structure support plate. Liquid draining from the upper head mixes with steam and water exiting from the core and is swept through the upper plenum to the hot legs.

In the following discussions, it will be shown that in a C-E PWR, the upper head drains well in advance of core uncovery or ICC, and therefore would have a minimal effect on the response of the CET during ICC.

ORNL-DWG 82-10213

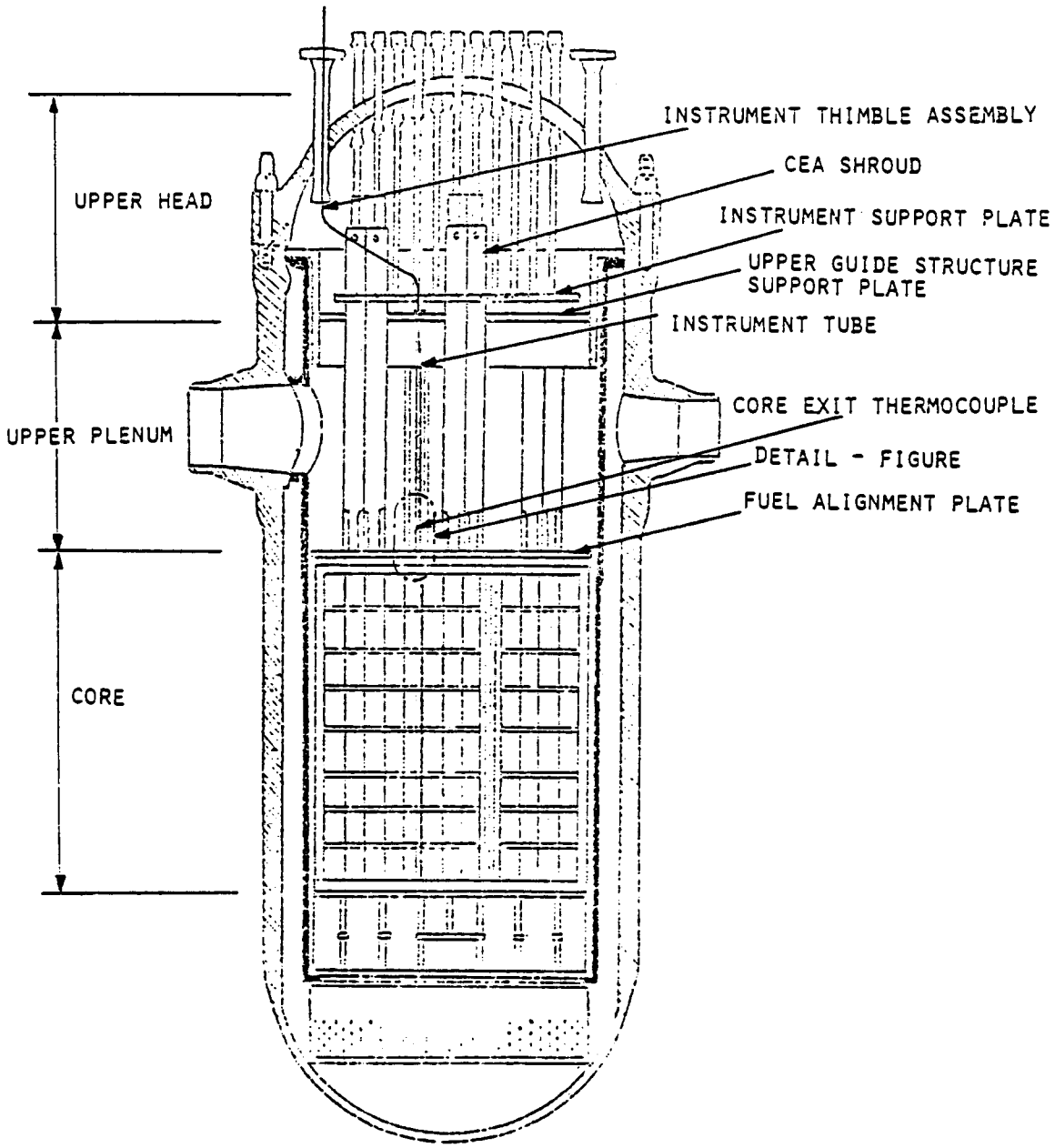

Fig. 10. Schematic drawing of typical reactor vessel showing the path and location of the core exit thermocouple junction (taken from ref. 31).

ORNL-DWG 82-10210

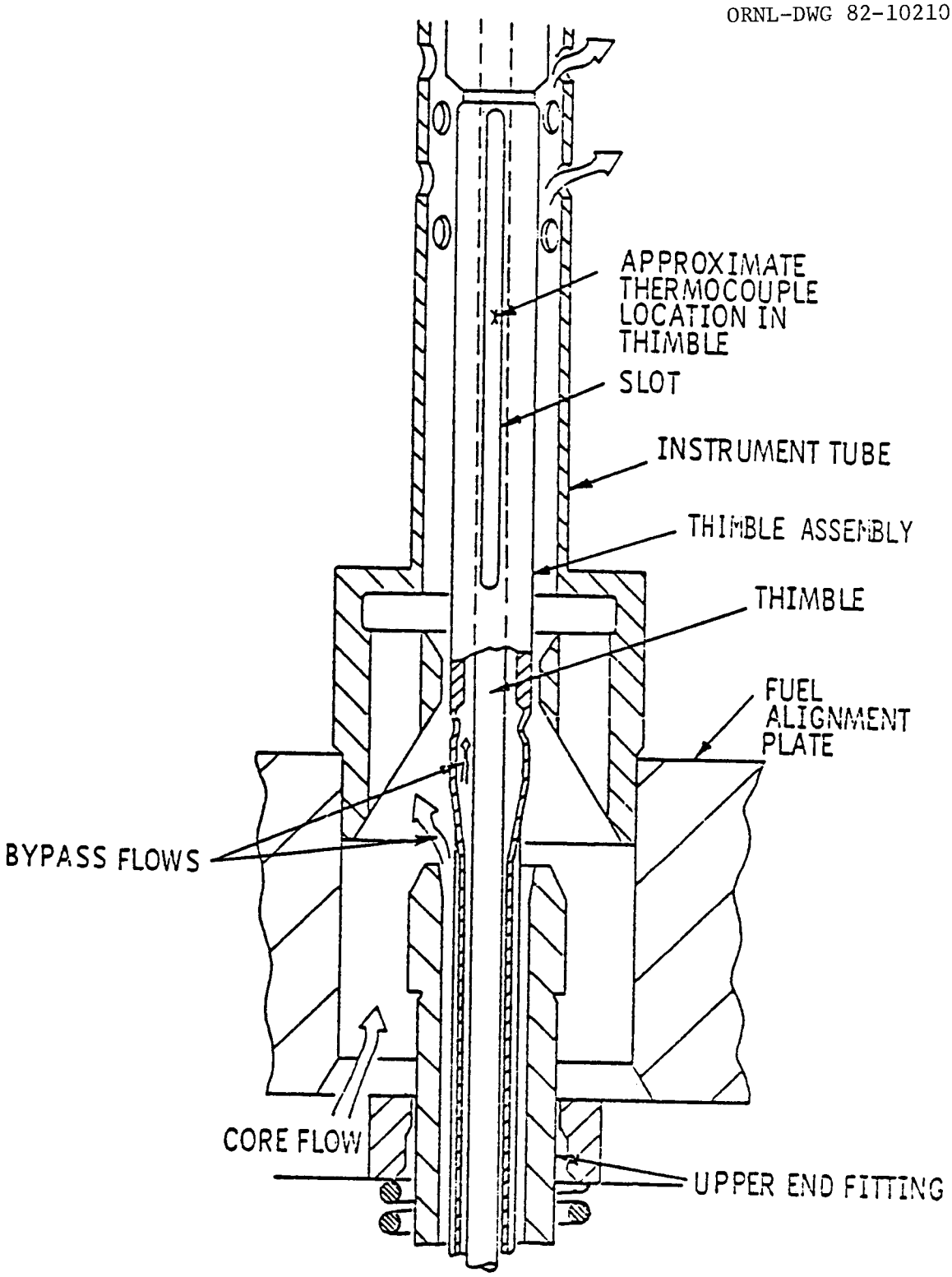

Fig. 11. Schematic drawing showing details of core exit thermocouple installation with respect to coolant flow from the core (taken from ref. 31).

Analysis of S-UT SEMISCALE Tests

The S-UT SEMISCALE test series was designed to determine the effect of upper head injection (UHI) on core cooling for small break loss-of-coolant accidents. Tests were conducted with and without UHI for comparison of system mass distributions and core cooling. The test system was modified to include vessel upper head internals that simulate the upper head flow paths in a PWR equipped with UHI capability. These internals included a perforated ECC injection tube, a bypass line from the top of the downcomer, a simulated control rod guide tube, and two simulated support columns.

The following seven tests were conducted:

Test # S-UT-X	Break Size % of Cold Leg Area	Break Size C-E PWR ft^2	UHI On/Off	Comments
1	10	0.5	Off	Results can be compared to S-07-10, and 10D
~~2~~	10	0.5	On	
3	2 1/2	0.125	Off	(Results not reviewed)
4	2 1/2	0.125	Off	Band heaters powered on all further tests
~~5~~	2 1/2	0.125	On	
6	5	0.25	Off	
~~7~~	5	0.25	On	

C-E reactors do not have UHI. Therefore, tests S-UT-2, -5, and -7 do not apply to C-E reactors due to the injection of ECC fluid in the upper head. The other tests, S-UT-1, -4, and -6, which were run without UHI to establish baseline response of the system, have been examined to determine their applicability to C-E PWR designs. (Test S-UT-3 was the same as S-UT-4 except for the use of band heaters. S-UT-3 was not reviewed.)

A. Test Geometry Evaluation

It was observed in one of the tests (S-UT-1) that core voiding and core uncovery occurred while the upper head was still in the process of draining. Since the draining characteristics of the upper head are geometry dependent, the Semiscale (S-S) design is compared to the typical

C-E PWR design. Relevant data are given in Table 5. Upper head draining depends on elevation head or height of fluid, volume, and flow area. If S-S is to simulate a PWR, then these geometry items must be similar.

Review of the designs shows that the elevation heads or height of fluid columns for S-S and C-E are similar. However, the volume and flow area arrangements are quite different. In S-S, only 33% of the upper head volume occurs above the guide tube outlet elevation. In a C-E PWR, roughly 73% of the upper head volume occurs above the elevation which corresponds to the CEA shroud outlet. Also in S-S, the guide tube flow area represents only 57% of the total area available for draining. In a C-E PWR, the CEA shroud flow area represents 97% of the total area for draining.

If these geometry differences are overlooked for the moment, the key question concerns the time of draining of the upper head. The upper head draining time is approximately equal to the volume of the upper head divided by the average liquid outlet volumetric flow rate.* Assuming that proper scaling requires that fluid velocities be the same in S-S as in the full scale PWR, the upper head draining time then is proportional to the ratio of the upper head volume to the exit flow area. Values of the volume to area ratio are given in Table 5. Either a larger volume or a smaller exit flow area will produce a longer time for draining.

For the condition where the level is above the guide tube outlet, the volume to flow area ratio for S-S is roughly four times larger than the ratio for a C-E PWR. The C-E upper plenum would therefore be expected to drain faster than S-S. When the level drops below the elevation of the guide tube outlet, the volume to flow area ratios are not as drastically different, but the conclusion is the same, that the C-E design would drain faster than S-S.

B. Test Data Evaluation

The S-S upper head draining times are given in Fig. 12 as a function of break size. Only the three S-S tests without UHI are presented (S-UT-1, -4, -6). The end of upper head draining is marked by the uncovery of the two support columns in the S-S design. From the test

---

*This approximate relationship can be checked by using data from test S-UT-1 (Ref: EG&G-SEMI-5333, "Quick Look Report for SEMISCALE MOD-2A Test S-UT-2.") The average outlet flow from one support column is 50 ml/s (see Fig. 27 from the Reference) and from the other 70 ml/s (see Fig. 28), for a total of 120 ml/s. This test showed that the bypass and guide tube uncovered quickly, providing a path for steam flow into the upper head (Figs. 25 and 26). Draining time = 0.495 (ft^3)*28.3 × 10^3 (ml/ft^3)/120 (ml/s) = 117 s. This agrees very well with the draining time from Fig. 21 of about 120 s.

Table 5. Semiscale and C-E PWR geometry comparisons

	S-S		C-E	
Elevations (in.)				
height of upper head	105		95	
distance from top of core to top of vessel	210		215	
Volume of upper head (ft^3)	0.495		490	
above guide tube outlet (ft^3 and % of total)	0.164	33%	356	73%
below guide tube outlet (ft^3 and % of total)	0.331	67%	134	27%
Flow areas (ft^2)				
guide tube/shrouds (ft^2 and % of total)	0.00196	57%	27.8	97%
support tubes/instrument tubes	0.00098	29%	0.267	1%
bypass/UGS R	0.00049	14%	0.534	2%
total	0.00343		28.6	
total without guide tube/shrouds	0.00147		0.801	
Volume/Flow area (ft)				S-S/C-E
above guide tube outlet	47.8		12.4	3.85
below guide tube outlet	225		167	1.34

Drain time = Mass/m = ρ Vol/ρ VA

Assuming ρ V to be constant for proper scaling

then drain time $\propto$ Vol/A

data, this is observed to be the time of strong steam flow venting from the core into the upper head through one or both of the support tubes.

Also plotted in Fig. 12, are the times for the start of core uncovery. It is clear from this data, that upper head draining is completed well in advance of core uncovery for all small break LOCA conditions tested, except for the 10% break (S-UT-1).

For the 10% break, S-UT-1, uncovery of the core begins roughly 50 s after initiation of the LOCA due to loop seal blowout. The extent of voiding in this case was not extensive, in fact the peak clad temperature did not exceed the initial clad temperature prior to the LOCA. Loop seal blowout may initiate a momentary depression of the core mixture level for C-E plants as well. This uncovery is not related to the extensive voiding and loss of coolant inventory which leads to ICC. A better example of ICC for this break size is, S-S test S-07-10, which is also shown in Fig. 12. Upper head draining was virtually identical to S-UT-1 but core uncovery due to loss of inventory did not occur until 100 s later. In test S-07-10, the CETs were observed to respond immediately to the onset of core uncovery and were unaffected by the earlier upper head draining as can be seen by examining traces of cladding temperatures and core exit temperature on Fig. 13.

One of the assumptions in the analysis of ICC, is that a specific LOCA event progress slowly enough for the operator to use the instrument displays to observe the progression. For the 10% break discussed above, this progression is too rapid. As described in the C-E responses to Questions 1 and 2 (6), the acceptable range of break sizes for LOCA events is 0.1 ft^2 or less. Therefore, all of the S-S small break LOCAs discussed above fall outside this range.

Figure 12, shows the range of predicted time of uncovery for C-E plants, for the 0.1 ft^2 break LOCA. Core uncovery occurs between 700 and 800 s for this break size. The smallest break size S-S test, S-UT-4, resulted in an upper head draining time of 400 s. Realizing that the geometry differences discussed earlier indicate that the C-E upper head will drain faster than S-S, these results show that upper head draining will preceed core uncovery by more than five min.

We find this response acceptable.

IV.C.5 Two-Phase Mixture in Upper Head

See Sect. IV.C.2.

IV.C.6 Repressurization Effects

Combustion Engineering was asked to discuss the expected response of the heated thermocouple level sensors during a repressurization with the water level below the sensor and the possible effects of condensation on

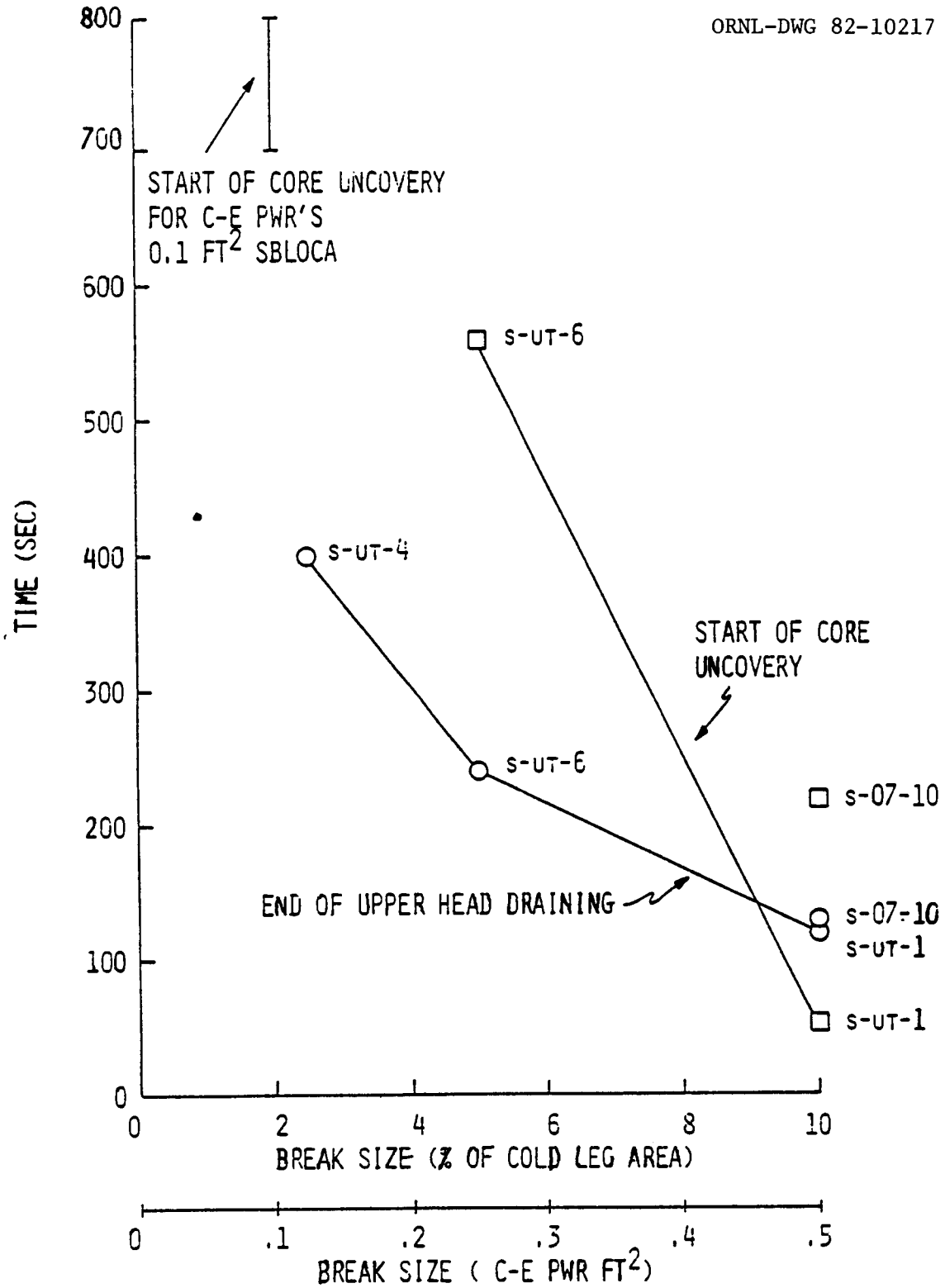

Fig. 12. Comparison of upper head drawing times to core uncovery times for a range of break sizes in the SEMISCALE tests S-07-10, S-TU-1, S-UT-4, and S-UT-6. The time predicted for the start of core uncovery in a C-E PWR is also shown in the upper left for comparison (taken from ref. 31).

ORNL-DWG 82-10216

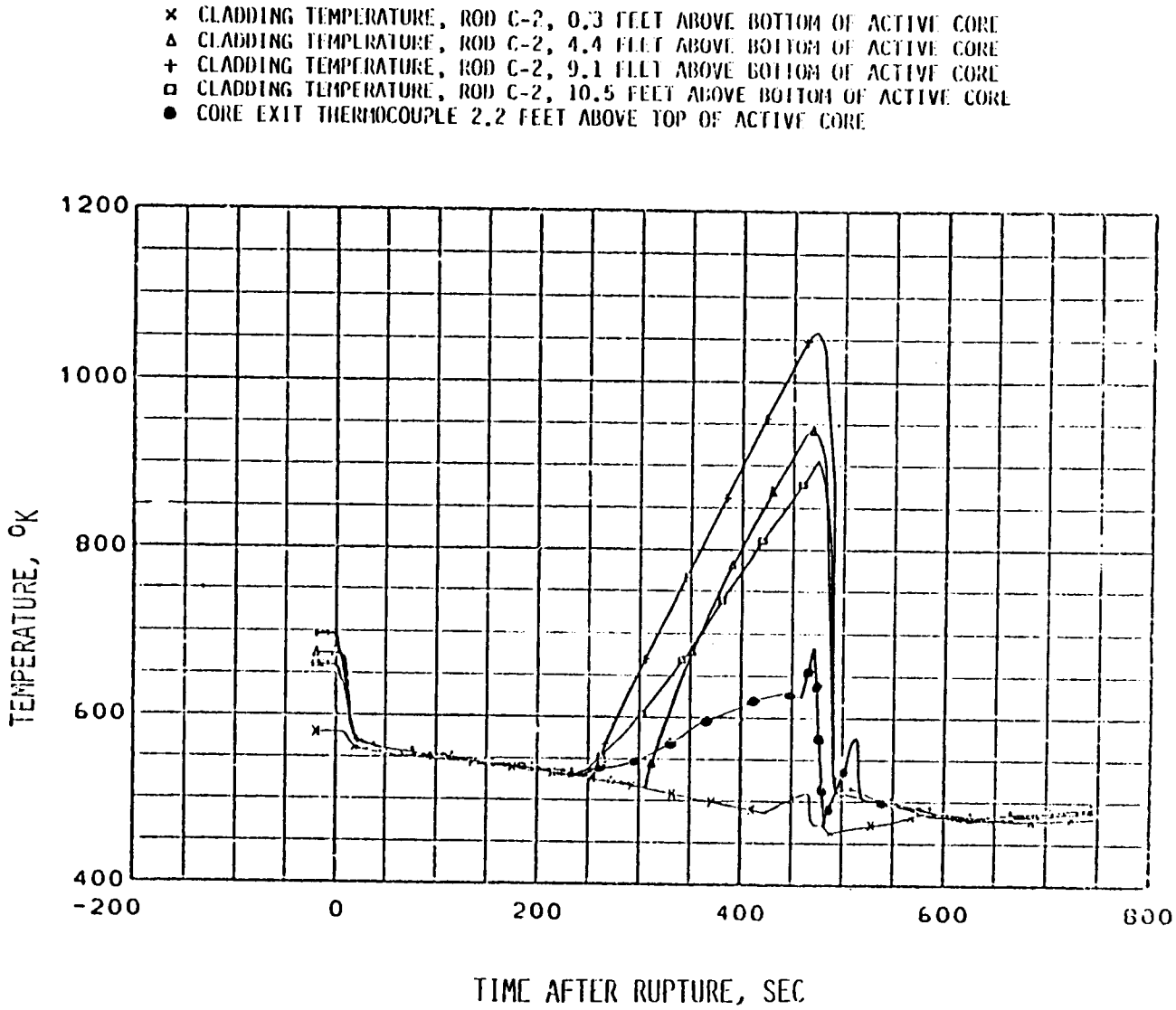

Fig. 13. Cladding temperatures at several locations and core exit temperature in SEMISCALE test S-07-10 for a 10% break (taken from ref. 31).

the response of the sensors. They were asked to discuss if this sequence of events could lead to an indication which would imply that the sensor is covered when it is not and to provide representative test data. Their response is given below.

> There are two primary effects which cause the output of an uncovered sensor to change as the pressure increases. These are the change in heat transfer coefficient and condensation. As the pressure increases, the heat transfer coefficient for steam at the heated junction thermocouple increases also. Thus, more heat is removed from the sensor heat coil causing the temperature of the heated junction to decrease. This in turn results in a reduction of the sensor output. The second effect is due to droplets (or film, ed.) of condensed water collecting on the sensor sheath inside the splash guard. These droplets are evaporated by heat from the sensor heater coil, thereby decreasing the temperature of the heated junction thermocouple and sensor output. The mass of liquid condensate is limited to that within the splash guard since the splash guard prevents water from running down the sensor sheath from above. Also, the effect of condensation is only temporary. That is, after the condensed water droplets have been evaporated, the sensor output increases to the value governed by the heat transfer coefficient to steam at the existing pressure. The time that it takes to evaporate the condensed droplets depends on the sensor heater power.
>
> During the Phase II test program on the HJTC system, the effect of changing pressure on sensor output was determined. Transients with both increasing and decreasing pressure were evaluated. Initially, the test vessel was completely filled with steam at 1400 psia and the sensor uncovered. A valve at the top of the vessel was opened to vent steam and allow the pressure to decrease. As the pressure dropped, sensor output increased (by about 20%) due to the decrease in heat transfer coefficient. The valve was closed and the pressure increased (due to vessel wall heat) about 600 psi in 10 s. The sensor output dropped by about 15% of the change in output from uncovered to covered in response to the increase in pressure. Thus, this lower sensor output was still well above the covered sensor output. Therefore, the sensor output remained high enough so that a misleading indication was not given.
>
> It should be noted that the repressurization rate observed in this test was much greater than would be expected in a reactor vessel for refilling after a small break LOCA. Also, the sensor heater power used in the test was much lower than would be used in a reactor vessel. For repressurization rates and sensor heater powers more typical of reactor vessel applications the effect of increasing pressure would be even less than observed in the Phase II test program. Additional data on the effect of pressure on sensor output is given in the Phase II test report.[24]

We find this response acceptable.

IV.C.7 On-line Test Procedures

Combustion Engineering was asked to describe the on-line test procedures for the heated junction thermocouple sensors. One test mentioned in earlier descriptions was based on a change in indication, observed by varying heater power.

The response of Combustion Engineering to this concern is given below.

> Because the system is computer based, it has the capability to perform operability self testing. The following automatic on-line sensor tests have been incorporated into the RVLMS. Failed tests will result in a fault indication at the operator display.
>
> 1. Computer software will be self-tested using a cyclical redundancy check.
> 2. A sensor high (top-of-scale, 2300°F) thermocouple measurement will indicate an open thermocouple circuit.
> 3. A low thermocouple measurement will indicate an improper cable connection or a shorted thermocouple.
> 4. A low ΔT output is provided to indicate loss of heater power. Excessive heater power current will be fuse protected, which will in turn result in loss of heater power and a low ΔT output alarm.
>
> In addition, access for test inputs will be provided for manual testing.
>
> In addition, there are plant specific items and the response below is taken from the submission of Southern California Edison for their San Onofre Units 2 and 3.[7]
>
> The following Automatic on-line surveillance tests are performed in the Qualified Safety Parameter Display System (QSPDS):
>
> 1. The temperature inside the QSPDS cabinet with a cooling system alarm on high temperature.
> 2. Power failure to the processor with alarm on failure.
> 3. Bad sensors and broken communication links with indication on the display.
> 4. CPU memory check and data communications checks with alarm and indication on the plasma display and digital panel meter on the cabinet. (These checks are performed periodically.)
> 5. Analog input offset voltage with compensation performed automatically.
> 6. Inputs out of range with alarm.
> 7. Low HJTCS differential temperature with alarm."
>
> (Additional information with respect to items 4, 6 and 7 above is provided as part of the response to Question 12 of the C-E Owners

Group generic responses[31] ed.) "The automatic on-line surveillance tests replace the need for a manual initiated on-line or off-line diagnostic test to be performed by the computer. A page displaying the status of the automatic surveillance tests will be provided to aid operator diagnostics.

Additionally, the following manual test capabilities are included in the design:

1. Calibration of the A/D boards (with automatic offset voltage compensation).
2. Access for test inputs and response time testing.
3. Reset of the system."

We find this response acceptable.

IV.C.8 How will operational availability be determined?

Combustion Engineering was asked to discuss how the operator or person testing the system will decide that the sensors are operating. The response of Combustion Engineering to this concern is given below.

An operator can assess system operability during plant operation by performing cross-channel comparisons. Excessive differences in thermocouple outputs between the two channels will be taken as a fault indication.

In any condition resulting in a reduced liquid level, any persistant difference in level output will also be a fault indication. The operator will be able to observe all thermocouple outputs on demand from the display to diagnose the failure. If further checking or confirmation is desired, diverse plant temperature measurements can be analyzed, (i.e., RTD, core exit thermocouples, etc.).

In addition to redundant channels, and operator system checks, operational availability is further enhanced by the on-line tests described (see above in Sect. IV.C.7). These will result in a fault indication at the operator display for the channel containing the fault. A diagnostic code will be provided at the operator display upon manual command by the operator.

We find this response to be acceptable.

IV.C.9 Location and Display of ICC Instruments in Control Room

The location of the display is plant specific, however, a description of the display system is given in Appendix B.3.

IV.C.10 Identification of Malfunctioning Components

See Sect. IV.C.7.

IV.C.11 System Accuracy

This is discussed in detail in Sect. IV.B.2.b.

IV.C.12 System Response Time

Combustion Engineering was asked to discuss the expected time response of the system with respect to the individual components and as a whole. They were asked to identify factors which limit the time response. The response of Combustion Engineering to this concern is given below.

The following are the expected time responses of individual components:

1. HJDTC - The Heated Junction Differential Thermocouple (HJDTC) response time is the time starting at sensor uncovery until the ΔT output reaches the ΔT setpoint value signaling an uncovered condition. Based on the results of Phase II testing, the response time is expected to be from 2 to 20 s, depending on vessel pressure and whether the sensor is covering or uncovering. The response time may be longer under extreme conditions when heater power has been reduced to protect the HJDTC from overheating.
2. Cabling time constants will be less than one s.
3. The signal processing electronics time delay will not be greater than 4.0 s.
4. The operator display (RVLMS panel) response time will be less than one s.

Overall system response time will range from 8 to 26 s. Response time when covering is much shorter than when uncovering because of the higher heat transfer coefficient of liquid as opposed to steam. When uncovered, response time is primarily a function of pressure, because the heat transfer coefficient increases with pressure. Another factor which increases response time response when uncovering is a film of liquid remaining on the HJDTC cladding which must be evaporated or boiled off as the heated junction temperature increases.

The Phase II test results generally support these responses. We find these responses acceptable.

IV.C.13 Display of Sensor Status

Combustion Engineering was asked to describe how the processor tests to determine that the sensor outputs are within range and how the ranges are selected.

> Analog signals are converted to digital form through a 12 bit resolution A/D converter. The input electrical ranges are preprogrammed to 0-10 V, 1-5 V, 4.20 ma, 10-50 ma, and a range suitable for Type K thermocouples.
>
> Functionally, the analog signals are first converted into volts, then scaled to engineering units. The input variable is then compared to upper and lower out of range values to detect out of range inputs. If the variable is out of range, the display will clearly identify the variable as out of range.

We find this response acceptable. Any deviations will have to be reviewed.

IV.C.14 Display Units

Combustion Engineering was asked to describe the display measurement units. This is a plant specific item and the response of Southern California Edison for their San Onofre Units 2 and 3[7] is given as a typical example below.

The primary ICC display will be in the Critical Function Monitoring System (CFMS). However, the QSPDS display will present the measured variables in engineering units. The engineering units will be in units most directly describing the process. For the ICC detection variables, the following units will be used:

Function	Units
1. Saturation/Subcooled Margin	- °F or PSIA (subcooled or superheat)
Inputs	- °F or PSIA
2. Reactor Vessel Level Above the Core	- % height above the core and discrete level displays
3. Core Exit Thermocouple Temperature	- °F

We expect this to be a typical response and as such find it acceptable.

IV.C.15 Parameters Calculated from Sensor Inputs

Combustion Engineering was asked to describe which parameter or parameters would need to be calculated from the sensor inputs. The description of the QSPDS implies that such a calculation might or might not be required. When would it be required? When would it not be required?

C-E maintains that this is a plant specific item and the response of Southern California Edison for their San Onofre Units 2 and 3[7] is given as an example below.

> The following ICC detection parameters or variables required calculation from sensor inputs:
>
> 1. Saturation or subcooled margin - The maximum of the temperature inputs and the minimum of the pressure inputs are compared to the saturation temperature or pressure to determine the temperature and pressure margin to saturation. Superheat will be calculated up to the difference between the range of the inputs and the saturation temperature.
> 2. Reactor vessel level above the core - The HJTC sensor differential temperature and the unheated temperature are compared to setpoints to determine if a liquid covered or uncovered conditions exists at each sensor location. The corresponding level output is directly related to the number of sensors that detect liquid or an uncovered state.
> 3. Representative core exit thermocouple temperature - A temperature will be calculated to represent the number of core exit thermocouple temperatures across the core. This calculation has not been determined yet. It is anticipated to be an average calculation such as the averaging of the five highest temperatures.

At their presentation in Bethesda on February 17, 1982, C-E described the ICC detection inputs to the QSPDS as including auctioneered highest temperature and lowest pressure inputs for calculating the subcooling margin. We feel this is an improvement over only calculating subcooling from the temperatures measured with the hot leg and cold leg RTDs. By including the unheated thermocouples from the HJTC probes among the auctioneered inputs, the SMM would predict the occurrence of saturation and the suitable conditions for formation of a steam bubble in the upper head, such as occurred in the Ginna incident. Since this item is plant specific, it will be reviewed for each submission.

One critic proposed an excellent set of criteria for judging some aspects of ICC instrumentation systems. These are summarized in Sects. IV.C.16-18 below.

IV.C.16 Does Operator Have a Well Defined Set of Signals to Guide Emergency Response?

The Staff has judged the Combustion Engineering ICC instrumentation system to meet this requirement. We concur.

IV.C.17 Operator May Have Too Much Information (Are There Too Many Instruments?)

See Sect. II.B above.

IV.C.18 Do Emergency Procedures Enable Operator to Avoid Misunderstanding of Those Signals Under Circumstances Where Accident Diagnosis is Needed in Conjunction With Emergency Actions?

Review of emergency procedures is not within the scope of this evaluation. This is a valid consideration which should be addressed by the staff in conjection with other procedures work.

IV.C.19 Emphasis on RVLM System May Have Confused Real Diagnosis Requirements.

It may be true that reactor vessel level measurements were emphasized in the early versions of 1.97 without regard for situations where no level may actually exist and core cooling is still adequate. The staff, however, was not alone in expressing the belief that in-vessel level measurements would provide the operator with enhanced capability to diagnose and minimize the effects of ICC (see Sect. II.B). A casual reader of the clarification of the requirements for instrumentation for ICC in Sect. II.F.2, p. 2 of NUREG-0737, might possibly interpret these requirements as placing undue emphasis on level measurement, when instead, an instrument to measure reactor vessel level is cited as an example of the type of new instrumentation which should receive consideration. The clarifications in item 1, 3, 4 and 5 of NUREG-0737 emphasize that the ICC instrumentation shall encompass all necessary instrumentation for indication of the approach, existence and recovery from inadequate core cooling conditions. None of the PWR reactor vendors have taken such a limited interpretation of these requirements as to only propose installation of reactor vessel level instrumentation, but all of the reactor vendor proposed systems include the saturation margin monitor, core-exit thermocouples, and some form of display as components of the ICC system. Thus, the ICC instrumentation is viewed by the vendors as a "system" that includes water level measurement, but only as a part of the overall ICC instrumentation system.

In our view the central issue for accident diagnosis requirements is the detection of the approach to ICC and this has been comprehensively covered by the requirements of NUREG-0737 and has been satisfactorily addressed in the Combustion Engineering ICC instrumentation systems.

IV.C.20 System is Scenario Dependent

The proposed devices, ..., require considerable information about hydraulic conditions, pressure distribution, and density variations in the primary coolant circuit to be useful for unambiguous interpretation of changing coolant inventory in the reactor core. A full understanding of mass and energy distribution and related physical behavior of the nuclear system would be needed to make such information diagnostically useful under most accident conditions."

We disagree with the general thrust of this concern. The ICC instrumentation is symptom oriented. Thus, what the operator needs to know from this standpoint is exactly what the ICC instrumentation will tell him, that conditions in the reactor vessel are such that the system may be approaching a condition of ICC. This is, and should be independent of how and why the system got into this condition. The operator needs to know from this instrumentation that the system is approaching or recovering from ICC. Other plant instrumentation must be used to diagnose the cause of the incident and emergency procedures used to recover.

Combustion Engineering, Westinghouse, NRC, TVA, ORNL, and INEL have carried out extensive analyses and/or tests related to the small break LOCA conditions since TMI-II. Presumably the objective of these tests has been to provide such information for the purpose of writing emergency procedures to be followed in the case of an indication of an approach to ICC.

IV.C.21 "Such Knowledge Does Not Appear Relevant to the Circumstances of Primary Concern Such as Accident Conditions Comparable to the TMI-II Event."

A rather large body of experimental evidence exists to show that the ICC systems will work over a wide variety of conditions, including TMI-II-like conditions. It would be incredible if the TMI-II conditions were not of the utmost concern in the design of these ICC systems and to state that the information they provide is not relevant is startling. Several millions of dollars have been spent by the vendors and the NRC to insure that the ICC instrumentation is relevant specifically to TMI-II-like events.

Post-TMI-2 drafts of Reg. Guide 1.97 suffered from a overreaction as a result of the TMI-II trauma. Considering the overall implementation of integrated ICC instrumentation systems as evidenced by Combustion Engineering and Westinghouse designs, then this argument loses much of its impact.

IV.C.22 Definition of ICC

Combustion Engineering was requested to amplify their discussion of their definition of Inadequate Core Cooling. The definition presented by

the Combustion Engineering Owner's Group was constrained to fall within bounds of certain core conditions. They were asked to discuss their approach to defining "inadequate core cooling" and give the limiting conditions for applicability of the heated junction thermocouple system. This is discussed in detail in Sect. I.B of this paper.

IV.C.23 Maximum Break Size

Combustion Engineering was asked to identify the maximum size break for which the system will still allow the operator to take corrective action under ICC procedures. They were requested to include a discussion of the heated junction thermocouple instrumentation with respect to system dynamics for a small break, such as 3 in. Their response to this concern is given below.

C-E currently judges that the maximum size break for which the operator can be expected to take corrective action under the ICC procedures is a 0.1 ft^2 (4 in.) break. This small break proceeds slowly enough for the operator to assess and act on the indications from the ICC instrumentation. The instrumentation, i.e., HJTC System, responds to the change in water level faster than the operator can reasonably follow the transient. Thus, the response of the HJTC system does not limit the operator's ability to take prompt corrective action. Larger breaks may proceed too fast for the operator to take any action during the transient. Automatic systems function to replenish lost inventory and mitigate the consequences of the large break accidents. The HJTC system is therefore designed to provide information during small breaks (less than 0.1 ft^2) and during the reflood portion of a large break.

The HJTC system measures the collapsed water level (liquid inventory) at discrete elevations in the reactor vessel above the fuel alignment plate. When the collapsed water level falls below an individual sensor, the sensor output increases and gives an uncovered (high differential temperature) indication. The collapsed water level is therefore displayed in steps as each successive sensor is uncovered. The actual collapsed water level is equal to or greater than the level displayed by the HJTC system. Figure 14 shows the typical response of the HJTC system for a 0.05 ft^2 break in the cold leg with the reactor coolant pumps tripped and flow from one high pressure safety injection pump (HPSIP). The response follows the collapsed water level above the fuel alignment plate in steps. Sensor elevations typical of the generic design have been used here. These exact elevations do not apply to any specific plant, however.

Figure 14 shows that the core starts to uncover at about 20 min. Thus, the operator has sufficient time to observe the decrease in water level and take corrective actions. For example, in this case where the flow from only one HPSIP is credited, the operator could attempt to establish safety injection flow from a second HPSIP. The flow from two HPSIPs equals the break flow at 17 min. After this time, the water level

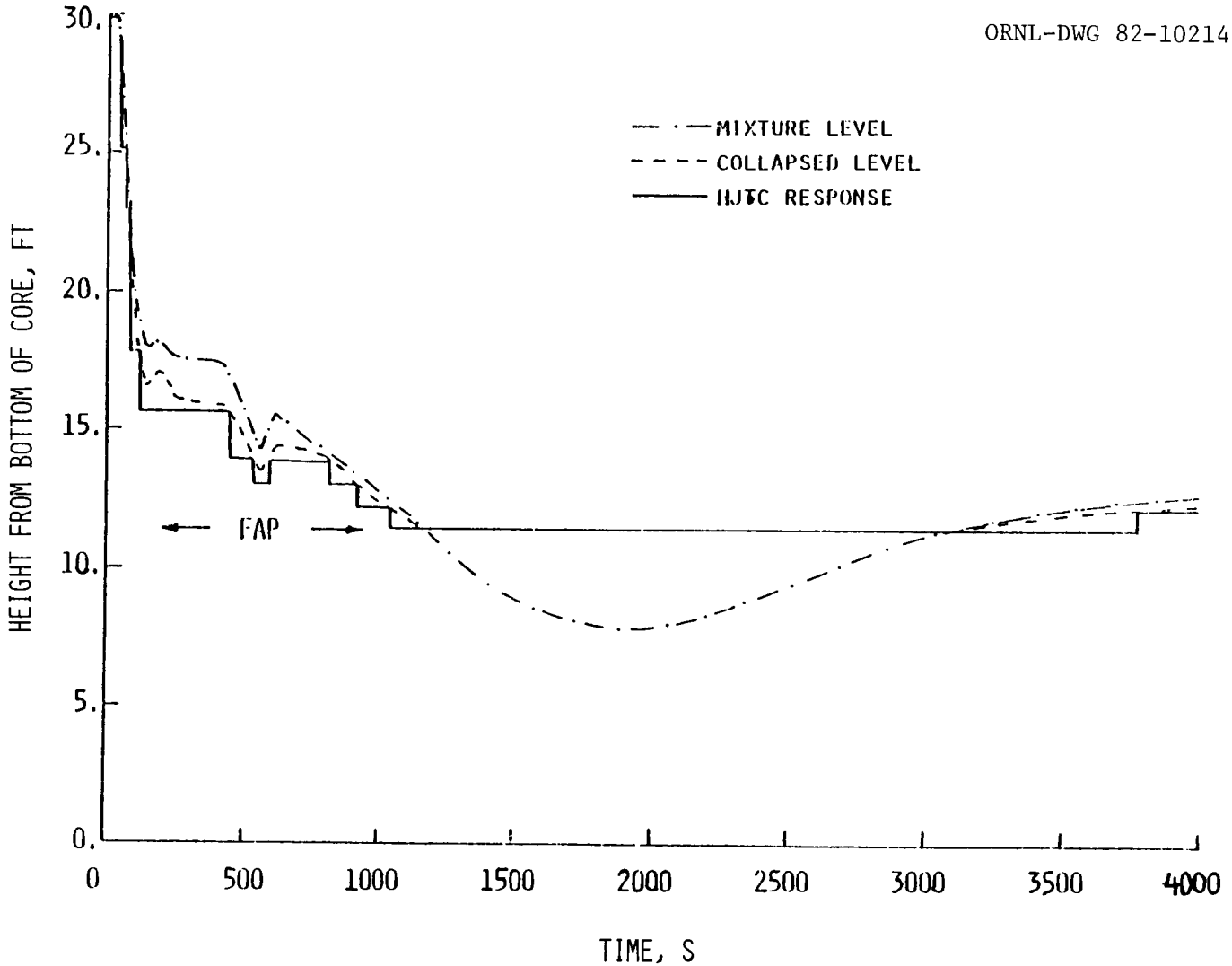

Fig. 14. Predicted response of heated junction thermocouple reactor vessel level measurements system to a 0.05 sq-ft cold leg break (taken from ref. 31).

would start to increase, thereby avoiding an inadequate core cooling condition."

We find this response acceptable.

IV.C.24 Survivability After Large Break LOCA

Combustion was asked to discuss survivability and outputs of the heated junction thermocouple level measurement system during and after a large break LOCA and to support their discussion with test results. Their response to this concern is given below.

The components of the heated junction thermocouple (HJTC) system which would experience sudden and/or sustained changes in the environment during and following a large break LOCA may be divided into several categories as follows:

a. HJTC Probe Assembly.
b. Supporting structures internal to the vessel which support the probe.
c. Pressure boundary components which seal and also support the HJTC probe.
d. Electrical connectors and cabling which supply power to the HJTC heaters and transmit thermocouple signals back to signal processing equipment located outside of containment.

Figure 15 is a schematic representation of the HJTC system components within containment.

A. HJTC Probe Assembly

The sensors of the HJTC probe assembly are constructed using Inconel clad hermetically sealed mineral insulated cable, which is typical of thermocouples and other instrumentation used in reactor environments. Each sensor is electrically and physically separate from other sensors and is located above the active core region. Initial large break LOCA pressure and temperature transients would not directly damage such cable. Later in the accident, the temperature in the region of the HJTC sensors may increase above the saturation temperature due to core clad heat up. For LOCAs analyzed to date, the temperature in the region of the HJTC sensors is less than 1500°F. At this temperature, HJTC sensors can be expected to operate and endure the loss of inventory and to provide an indication of the recovery of inventory in the region above the core if and when such a recovery is affected.

ORNL-DWG 82-10175

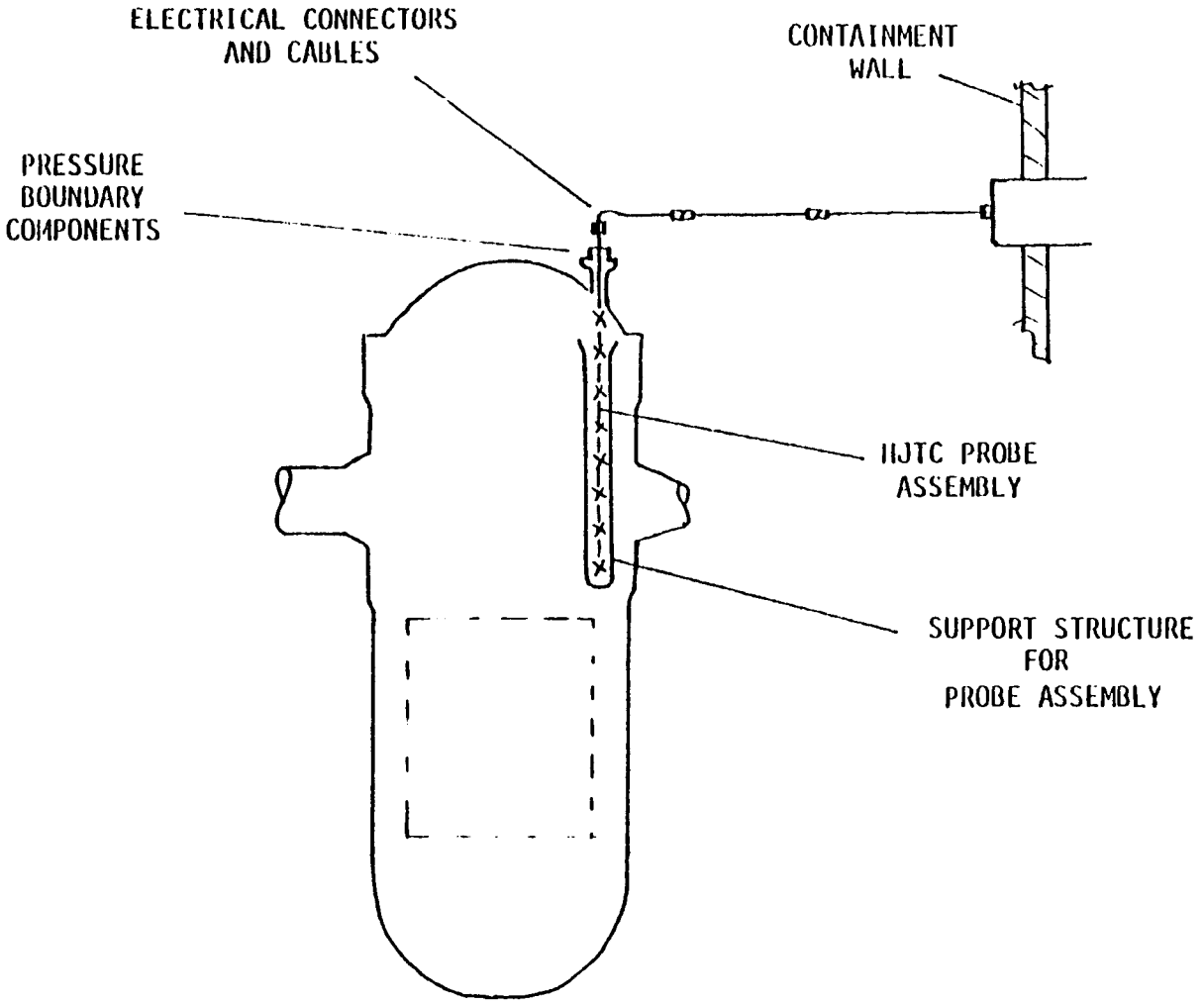

Fig. 15. Schematic drawing showing the arrangement of the heated junction thermocouple reactor vessel level measurements system components located inside the containment (taken from ref. 31).

B. Support Structures Internal to the Vessel

The hardware within the reactor vessel which supports the HJTC probe assembly is designed to meet the intent of Subsection NG and Appendix F of the ASME Boiler and Pressure Vessel Code. As such, the stress limits for core support structures are adhered to in the design analysis of the HJTC support structures. The deflection of the HJTC support structure is also limited prevent damage to the HJTC instrumentation. The stresses and deflections are evaluated for a large break LOCA based on a blowdown analysis and appropriate mechanical normal operating loads, to assure the stress and deflection limits are not exceeded.

C. Pressure Boundary Components

All pressure retaining components supplied for the HJTC system are designed in accordance with Sect. III of the 1980 Edition of the ASME Boiler and Pressure Vessel Code.* As such, normal operating, transient, and faulted conditions are considered and applied to the design of the HJTC pressure boundary components. The physical position of the flanges used for the HJTC system, i.e., on the reactor head, is such that a large break in the primary piping would not directly affect the mechanical integrity of the HJTC flange.

D. Electrical Connectors and Cabling

The sensor cables leading up to the electrical connectors, and the connectors, will be qualified in accordance with IEEE Std 323-1974 and IEEE Std 344-1975. These standards cover the environmental and seismic qualification of Class 1E equipment for nuclear power generating stations. The environmental qualification encompasses the ex-vessel conditions expected following a large break LOCA."

We find this response acceptable.

IV.C.25 How do Core Exit Thermocouples Estimate Core Uncovery?

Combustion Engineering was asked to discuss how the core-exit thermocouples might be used to estimate the depth of core uncovery. They were also asked to discuss how the rate of loss of coolant may affect the core-exit thermocouple response. Combustion Engineering was asked to provide, in addition, an evaluation of the pros and cons of using the indications of the core-exit thermocouples as a measure of the liquid inventory in the vessel if the coolant level is below the top of the core.

---

*In some cases, the utility may require that an alternate edition be employed.

The C-E requirement on Core Exit Thermocouples (CET) to monitor ICC is limited to the trending of steam superheat at the exit of the core. This provides an indication of when the core starts to uncover, of the direction of the event progression while the core is partially uncovered and of the recovery of the core. The magnitude of the steam temperature or superheat might be used to infer more about the conditions within the core, but C-E believes that more information is not needed for the reactor operator at the time of an event in order for him to take appropriate mitigating actions and to monitor their effectiveness. To obtain more information about core level or vessel inventory from the measurement of steam temperature would required an extensive on-line algorithm which would be dependent on several empirical relations. These relations include the transient heat transfer coupling of the fuel rod and the steam and the heat produced by clad oxidation. C-E believes that such analyses are properly left until after an event is terminated, when the data stored during the event can be analyzed for the unique set of event conditions.

Once the two-phase level drops below the top of the core, it is the steam temperature which is of immediate concern to the operator. Higher steam temperature means higher clad temperature and a greater potential for fission product release, so the operator needs an indication of whether the steam temperature is increasing or decreasing. This indication is provided by the CET measurement of steam temperature.

An analysis was made, for two different rates of core uncovery, of the relation among clad temperature, core exit steam temperature and two phase level. The conditions at the start of uncovery were typical of small break analyses conditions; i.e., 600 psia, 1180 s after reactor trip, top peak axial power distribution and core uncovery rates of 0.014 and 0.14 in./s. Figures 16 and 17 show the results. Figure 16 gives the maximum clad temperature at any instant vs the steam temperature at the core exit, for the two uncovery rates. Figure 17 gives the same clad temperature vs the two-phase level in the core.

Figure 16 shows that there is a relatively small difference in the maximum clad temperature for a given value of core exit steam temperature when the core uncovers at two different rates. As long as there is a two-phase level to boil off steam and to provide a steam flow at the core exit, there is a strong thermal coupling between the clad temperature and the exit steam temperature. Even though the two-phase levels may differ, the variation in exit steam temperature is representative of the variation in clad temperature.

Figure 17 shows that there can be a large difference in the maximum clad temperature when the core uncovers to a given level, depending on the rate of uncovery. As the two phase level falls and uncovers a given clad location, the surface heat transfer coefficient decreases by about a factor of 100 from that for boiling to that for superheated steam. This lowered film coefficient causes a decrease in heat flux while the fuel and clad temperature rise. For a rapid uncovery to a given level, the fuel does not have as much time to heat up as it does for a slower

ORNL-DWG 82-10177

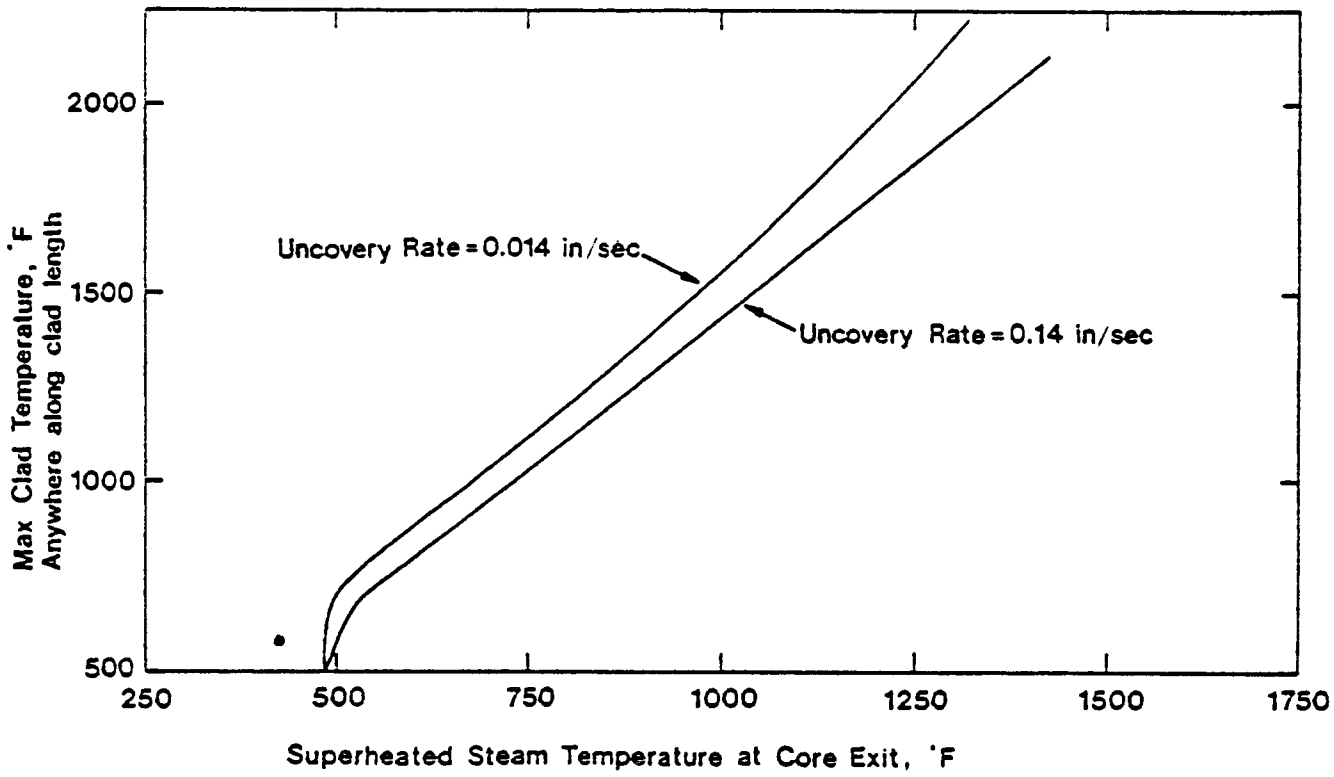

Fig. 16. Predicted correlation of the maximum clad temperatures with the indication of the core exit thermocouples for two different rates of uncovery (taken from ref. 31).

ORNL-DWG 82-10176

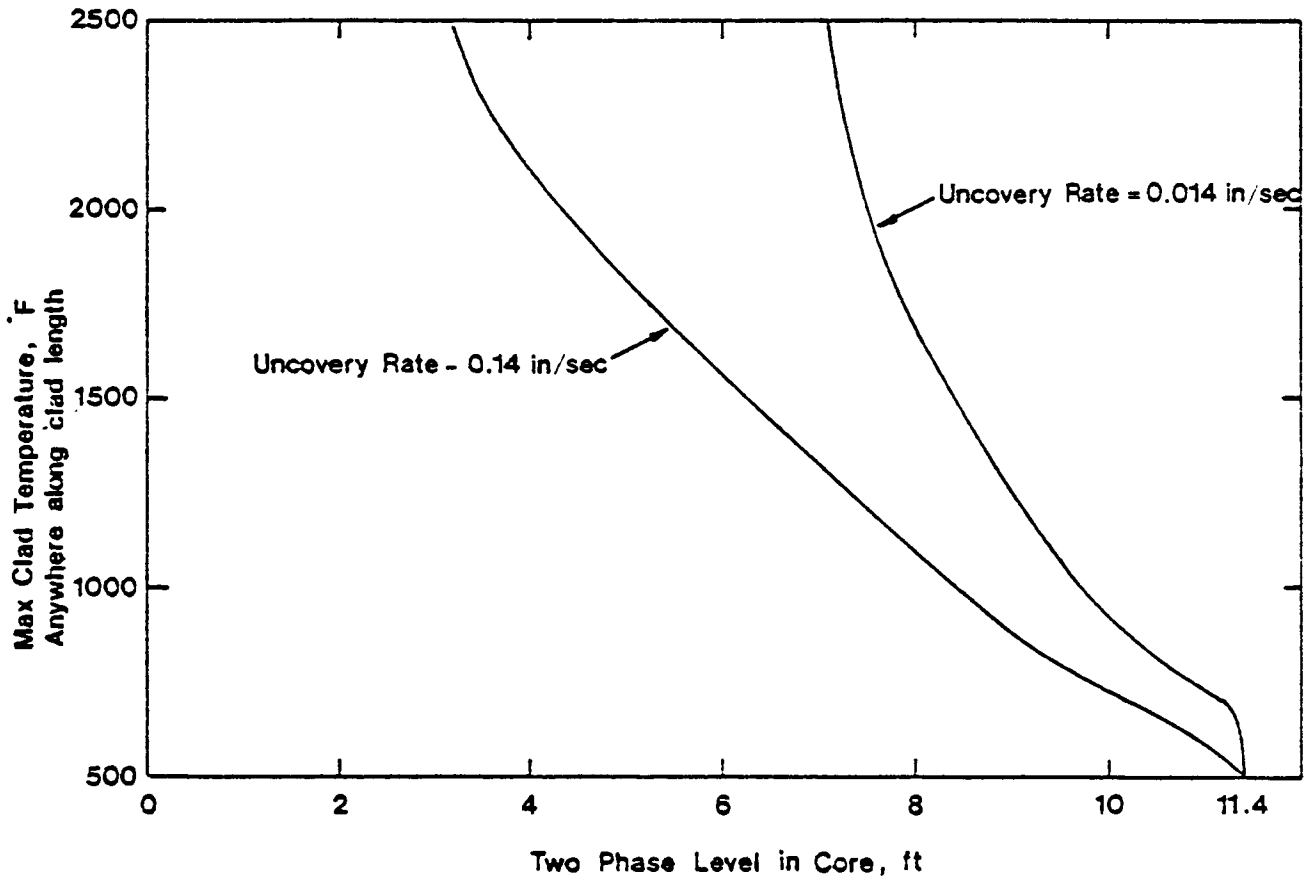

Fig. 17. Predicted correlation of the maximum clad temperatures with the level of the two-phase mixture in the core for two different rates of uncovery (taken from ref. 31).

uncovery to the same level. Hence, for any given transient two phase level there are large differences in the possible instantaneous clad temperatures, depending on how long the clad has been uncovered.

The conclusions are that a measurement of core exit steam temperature is much better than a measurement of two phase level (sic. within the core region) for indicating the clad temperature behavior, and that clad temperature is the proper parameter for evaluating the potential for fission product release.

We find this response acceptable.

IV.C.26 Normal In-Service Life

From extensive data on the use of type K thermocouples in nuclear reactors, normal service is not expected to cause any appreciable degradation in the HJTC sensors. With the heater power controlled to prevent overheating of the HJTC heaters (cf. Sect. IV.D.28 below), the heater elements are expected to have an equally long lifetime. Radiation effects on the heaters are also expected to be negligible.

IV.C.27 Spacing of HJTC Sensors

Combustion Engineering was asked to describe the spacing of the sensors in each heated junction thermocouple instrument string. They were also asked if the sensors to be spaced evenly from the core alignment plate to the top of the reactor vessel head and of the spacing will be the same in both instrument strings. Their response indicated that the spacing will be plant specific and is given below.

Actual dimensions will be provided on a plant specific basis. For all installations, sensor locations in both probe assemblies will be identical.

The following sensor locations are examples of typical sensor placement:

Sensor	Location
1	Near the top of the vessel head.
2	Midway between sensors 1 and 3.
3	Above the upper guide structure support plate.
4	Top of the hot leg lip.
5	Midway between sensors 4 and 6.
6	Bottom of the hot leg.
7	Midway between sensors 6 and 8.
8	Above the fuel alignment plate.

The primary reason for choosing identical spacing was to provide the operator with the means to quickly observe system faults by any difference in the level indication between the two channels. With eight sensors, the probe assembly provides indications of the collapsed liquid level at intervals ranging from approximately one to four ft. This resolution will be sufficient to adequately determine the level and trending of liquid inventory above the core.

We find this response aceptable, although since the actual spacing of the sensors is stated to be plant specific, this concern will be reviewed for each applicant.

IV.C.28 HJTC Heater Power and Power Supplies

Combustion Engineering was asked to describe the choice of heater power or range of heater powers to be used with the heated junction thermocouple sensors.

> Heater power will be chosen from test data taken from prototype probe assemblies to give a clear difference between uncovered and covered states. Heater power will be kept at a constant level except when reduced by the heater power control system to prevent excessively higher heated junction temperatures.

They were also asked if separate supplies are provided for each sensor heater and to discuss the heater supply system with respect to NUREG 0737 "single failure" criterion. Their response is given below.

> No, each of the two probe assemblies will have two heater power supplies. Each heater power supply will provide heater power for four heaters connected in series. The four HJDTC sensors supplied by one heater power supply will occupy alternating level positions with the other four sensors in a probe assembly.
>
> The RVLMS utilizes two electrically independent channels. Each channel consists of one probe assembly (eight sensors), one signal processing unit, two heater power supplies, one operator display, cabling and connectors. The two channels are identical including sensor locations. The two independent operator displays will continuously display percentage of reactor vessel level above the fuel alignment plate.
>
> Most power supply failures, capable of causing an erroneous or ambiguous indication will be automatically detected and a fault signal provided to the operator. Any failure which causes an error in level indication will result in a difference in the level indications on the two operator displays. The operator will then be able to obtain individual thermocouple junction temperatures for operability checking diagnostic purposes upon manual command at the operator module. This will enable the operator to determine which channel is operating correctly.

In addition, Combustion Engineering was asked to discuss how uncovered sensors are protected from overheating while covered sensors are supplied with sufficient power for a clear indication of uncovery. Their response is given below.

> The heater power control logic, ensures that an uncovered sensor will always signal an uncovered condition either by a high ΔT or by a high unheated junction temperature, while preventing excessive HJDTC temperatures. Covered sensors, when uncovered, will be subjected to the same heater power and environmental conditions as previously uncovered sensors, and will provide the same uncovered indication.

We find these responses acceptable.

IV.C.29 HJTC Set Points

Combustion Engineering was asked to discuss the predetermined setpoint for the heated junction thermocouple signals and how it will be selected. This is a plant specific item and the response of Southern California Edison for their San Onofre Units 2 and 3 is given below as a typical example.

A setpoint on each of two inputs determines the presence or absence of liquid at each HJTC sensor location:

1. Differential temperature between the unheated and heated HJTC junctions, and
2. Unheated HJTC junction temperature.

When either of these two input temperatures exceeds the setpoint for the respective input temperature, the logic indicates that the liquid level has dropped to a level lower than the sensor location. The setpoint values are predetermined and are installed as part of the level logic software. The differential temperature setpoint is calculated (based on tests) to be low enough to obtain a good response time but high enough to assure liquid is not present. The unheated junction temperature setpoint is calculated to assure that liquid is not present at the sensor position.

V. CONCLUSIONS

The Inadequate Core Cooling Instrumentation system which includes the Heated Junction Thermocouple Reactor Level Measurement System proposed by Combustion Engineering was reviewed. The scope of the review included design criteria, possible ambiguities, and analyses of performance and application. The review concentrated on the heated junction thermocouple level measurement instrumentation and its integration with other components of the ICC instrumentation system. It was found that the system proposed by Combustion Engineering does provide an unambiguous indication of water level above the core when, in fact, such a level exists. For cases where the reactor vessel is filled with a two-phase mixture, experimental evidence indicates that the system will indicate collapsed liquid level or the trending of the reactor vessel coolant inventory. The conclusion of this evaluation is that the Inadequate Core Cooling Instrumentation system which includes the Heated Junction Thermocouple Reactor Level Measurement System proposed by Combustion Engineering will meet the requirements of NUREG-0737 to provide the plant operator with an unambiguous indication of the approach to inadequate core cooling in slow transients and is acceptable. Furthermore, the system will provide the plant operator a valuable indication of the effect of the recovery measures. Prior to final design approval, however, the applicants will be required to resolve the open items listed below.

V.A. Open Items to be Resolved.

Generic emergency operating procedures have not been provided in the descriptions of the Combustion Engineering ICC systems. Detailed emergency operating procedures, however, are considered plant specific and will be reviewed separately for each plant. Secondly, Combustion Engineering will be asked to analyze the response of the HJTC system for the case of a small break in the upper head. A modification to the design of the separator tube was announced in the NRC/Vendor/Utilities meeting in Bethesda on February 17, 1982. In this modification, the HJTC probe has been divided into two independent sections; one in the upper head region and the second in the upper plenum. Analysis of the probe with this modification is a new open issue. Other open issues include analysis or testing of the behavior of the probe with primary coolant pumps running with both voided and unvoided coolant and the completion of the Phase III tests and report. There are no other significant open issues to be resolved with respect to the generic Combustion Engineering ICC instrumentation system.

V.B. Plant Specific Items Which Must be Reviewed Individually.

The generic heated junction thermocouple reactor vessel level measurement system has been evaluated on the basis of documentation supplied by the Combustion Engineering Co. Any generic description of reactor vessel level measurement systems is necessarily incomplete when applied to a specific plant because of differences in the individual plants. In

the course of the evaluation of submittals by the individual licensees, it has become apparent that some utilities have chosen not to install the complete system offered by Combustion Engineering, particularly with respect to the display system. Specific plant designs must, therefore, be evaluated on a plant-by-plant basis in cases which are clearly not covered by the generic Combustion Engineering description or testing program.

Among the plant specific items which will be reviewed on a case-by-case basis are:

1. Location of the display system in the control room,
2. Integration of the ICC displays into one console or rack,
3. Location of the HJTC sensors in the reactor vessel head.

The response of the applicants to items listed in NUREG-0737, II.F.2 (see Appendix A, this document) including Attachment 1 and Appendix B are to be reviewed on a plant specific basis for all plants. Deviations from the generic descriptions in this document must be justified.

V.C. Limitations

The use of the ICC instrumentation is limited to those transients which progress relatively slowly and for which operator action is required to prevent ICC. It may also be used in the recovery from both fast and slow transients and for system diagnostics which do not require operator action. Size of the existing opening in the head limits the number of discrete level measurements to 8. There is, then, an absolute uncertainty in the measured level associated with the distance between the individual sensors. The uncertainty in the detection of water level at any of these discrete locations is 2.5 cm (1 in.). The system may not be used during a rapid depressurization. It is believed that these transients would be of short duration (100 s), relative to the response time required for the operator to take action in the regime of small break of 0.1 sq ft and smaller. It is not expected to be used for very rapid transients associated with large breaks, since recovery actions should be initiated automatically without operator intervention. The system can be used, however, to monitor the recovery from large breaks.

V. CONCLUSIONS

The Inadequate Core Cooling Instrumentation system which includes the Heated Junction Thermocouple Reactor Level Measurement System proposed by Combustion Engineering was reviewed. The scope of the review included design criteria, possible ambiguities, and analyses of performance and application. The review concentrated on the heated junction thermocouple level measurement instrumentation and its integration with other components of the ICC instrumentation system. It was found that the system proposed by Combustion Engineering does provide an unambiguous indication of water level above the core when, in fact, such a level exists. For cases where the reactor vessel is filled with a two-phase mixture, experimental evidence indicates that the system will indicate collapsed liquid level or the trending of the reactor vessel coolant inventory. The conclusion of this evaluation is that the Inadequate Core Cooling Instrumentation system which includes the Heated Junction Thermocouple Reactor Level Measurement System proposed by Combustion Engineering will meet the requirements of NUREG-0737 to provide the plant operator with an unambiguous indication of the approach to inadequate core cooling in slow transients and is acceptable. Furthermore, the system will provide the plant operator a valuable indication of the effect of the recovery measures. Prior to final design approval, however, the applicants will be required to resolve the open items listed below.

V.A.1.a Open itemns to be resolved. Generic emergency operating procedures have not been provided in the descriptions of the Combustion Engineering ICC systems. Detailed emergency operating procedures, however, are considered plant specific and will be reviewed separately for each plant. Secondly, Combustion Engineering will be asked to analyze the response of the HJTC system for the case of a small break in the upper head. A modification to the design of the separator tube was announced in the NRC/Vendor/Utilities meeting in Bethesda on February 17, 1982. In this modification, the HJTC probe has been divided into two independent sections; one in the upper head region and the second in the upper plenum. Analysis of the probe with this modification is a new open issue. Other open issues include analysis or testing of the behavior of the probe with primary coolant pumps running with both voided and unvoided coolant and the completion of the Phase III tests and report. There are no other significant open issues to be resolved with respect to the generic Combustion Engineering ICC instrumentation system.

V.A.1.b Plant specific items which must be reviewed individually. The generic heated junction thermocouple reactor vessel level measurement system has been evaluated on the basis of documentation supplied by Combustion Engineering. Any generic description of reactor vessel level measurement systems is necessarily incomplete when applied to a specific plant because of differences in the individual plants. In the course of the evaluation of submittals by the individual licensees, it has become apparent that some utilities have chosen not to install the complete

system offered by Combustion Engineering, particularly with respect to the display system. Specific plant designs must, therefore, be evaluated on a plant-by-plant basis in cases which are clearly not covered by the generic Combustion Engineering description or testing program.

Among the plant specific items which will be reviewed on a case-by-case basis are:

1. Location of the display system in the control room,
2. Integration of the ICC displays into one console or rack,
3. Location of the HJTC sensors in the reactor vessel head.

The response of the applicants to items listed in NUREG-0737, II.F.2 (see Appendix A, this document) including Attachment 1 and Appendix B are to be reviewed on a plant specific basis for all plants. Deviations from the generic descriptions in this document must be justified.

V.A.2 Limitations

The use of the ICC instrumentation is limited to those transients which progress relatively slowly and for which operator action is required to prevent ICC. It may also be used in the recovery from both fast and slow transients and for system diagnostics which do not require operator action. Size of the existing opening in the head limits the number of discrete level measurements to eight. There is, then, an absolute uncertainty in the measured level associated with the distance between the individual sensors. The uncertainty in the detection of water level at any of these discrete locations is ±2.5 cm (±1 in.). The system may not be used during a rapid depressurization. It is believed that these transients would be of short duration (≈100 s), relative to the response time required for the operator to take action in the regime of small break of 0.1 sq ft and smaller. It is not expected to be used for very rapid transients associated with large breaks, since recovery actions should be initiated automatically without operator intervention. The system can be used, however, to monitor the recovery from large breaks.

REFERENCES

1. "Report of the President's Commission on The Accident at Three Mile Island," Washington, D.C., 1979, pp. 81-141.

2. Ibid., p. 63 (see also p. 72).

3. "TMI-Related Requirements for New Operating Licenses," NUREG-0694, Office of Nuclear Reactor Regulation, U.S. Nuclear Regulatory Commission, 1980.

4. Interim Report No. 3 on TMI-2, Advisory Committee on Reactor Safeguards, May 16, 1979.

5. "Clarification of TMI Action Plan Requirements," NUREG-0737, U.S. Nuclear Regulatory Commission, 1980.

6. A letter from D. Eisenhut (NRC) to B&W owners on the subject of "Status Summary - Staff Evaluation of Submittals Regarding Additional Instrumentation for Detection of Inadequate Core Cooling for B&W Reactors", August 21, 1980.

7. Included in all C-E plant owner submittals, e.g., "Response to NRC Action Plan NUREG-0660, San Onofre 2 & 3, Inadequate Core Cooling Detection System, Summary Status Report," Southern Califonia Edison Company, Dated April 198, p. II-F.2-13.

8. Ibid., p. II.F.2-12.

9. "TMI-2 Lessons Learned Task Force Status Report and Short-Term Recommendations," NUREG-0578, U.S. Nuclear Regulatory Commission, July 1979.

10. "Clarification of TMI Action Plan Requirements," NUREG-0737, Nuclear Regulatory Commission, Washington, D.C., November 1980.

11. R. L. Anderson, L. A. Banda, and D. G. Cain, "In-Core Thermocouple Performance underr Simulated Accident Conditions", IEEE Trans. Nucl. Sci., NS-28, 773 (1981).

12. "Interim Report on TMI-2 Accident," ACRS, April 7, 1979.

13. "TMI-2 Lessons Learned Task Force Final Report," NUREG-0585, Nuclear Regulatory Commission, Washington, D.C., October 1979, p. A-12.

14. "The NRC Action Plan Developed as a Result of the TMI-2 Accident," NUREG-0660, Nuclear Regulatory Commission, Washington, D.C., May 1980, p. I.D-6.

15. "Clarification of TMI Action Plan Requirements," NUREG-0737, Nuclear Regulatory Commission, Washington, D.C., November 1980, p. II.F.2-1.

16. Combustion Engineering Standard Plant Safety Analysis Report, CESSAR-F, Document No. 708/2s, 1981.

17. K. G. Turnage, R. L. Anderson, C. E. Davis, and G. N. Miller, "Advanced Two-Phase Flow Instrumentation Program, Quarterly Progress Report for October-December 1979." NUREG/CR-1346, ORNL/NUREG/TM-382, Oak Ridge National Laboratory, Oak Ridge, TN, May 1980, pp. 3-13.

18. K. G. Turnage, R. L. Anderson, C. E. Davis, and G. N. Miller, "Advanced Two-Phase Flow Instrumentation Program, Quarterly Progress Report for January-March 1980," NUREG/CR-1647, ORNL/NUREG/TM-403, Oak Ridge National Laboratory, Oak Ridge, TN, September 1980, pp. 3-10.

19. K. G. Turnage, R. L. Anderson, C. E. Davis, G. N. Miller, R. W. McCulloch, and S. C. Rogers, "Advanced Two-Phase Flow Instrumentation Program, Quarterly Progress Report for July-September 1980," NUREG/CR-1903, ORNL/NUREG/TM-430, Oak Ridge National Laboratory, Oak Ridge, TN, March 1981, pp. 3-15.

20. K. G. Turnage, R. L. Anderson, C. E. Davis, G. N. Miller, R. W. McCulloch, and S. C. Rogers, "Advanced Two-Phase Flow Instrumentation Program, Quarterly Progress Report for October-December 1980," NUREG/CR-2007, ORNL/NUREG/TM-443, Oak Ridge National Laboratory, Oak Ridge, TN.

21. J. E. Hardy, K. G. Turnage, C. E. Davis, G. N. Miller, R. W. McCulloch, and S. C. Rogers, "Advanced Two-Phase Flow Instrumentation Program, Quarterly Progress Report for January-March 1981," NUREG/CR-2204, ORNL/NUREG/TM-7877, Oak Ridge National Laboratory, Oak Ridge, TN, July 1981.

22. "Heated Junction Thermocouple Phase I Test Report," CEN-185-P, Supplement 1, C-E Power Systems, Combustion Engineering, Inc., September 1981.

23. "Documentation of ICC Instrumentation for CE Nuclear Steam Supply Systems," CEN-185, CE Power Systems, Combustion Engineering, Inc., September 1981.

24. "Heated Junction Thermocouple Phase II Test Report," CEN-185-P, Supplement 2-P, CE Power Systems, Combustion Engineering, Inc., November 1981.

25. "Review of Small Break Transients in Combustion Engineering Nuclear Steam Supply Systems, CEN-114-p, July 1979.

APPENDIX A

NUREG-0737 II.F.2 INSTRUMENTATION FOR DETECTION OF INADEQUATE CORE COOLING

Position

Licensees shall provide a description of any additional instrumentation or controls (primary or backup) proposed for the plant to supplement existing instrumentation (including primary coolant saturation monitors) in order to provide an unambiguous, easy-to-interpret indication of inadequate core cooling (ICC). A description of the functional design requirements for the system shall also be included. A description of the procedures to be used with the proposed equipment, the analysis used in developing these procedures, and a schedule for installing the equipment shall be provided.

Changes to Previous Requirements and Guidance

(1) Specify the "Design and Qualification Criteria" for the final ICC monitoring system in section, "Clarification" (items 7, 8, and 9), Attachment 1, and Appendix B.

(2) Specify complete documentation package to allow NRC evaluation of the final ICC monitoring systems to begin on January 1, 1981.

(3) No preimplementation review is required but postimplementation review of installation and preimplementation review before use as a basis for operator decisions are required.

(4) Installation of additional instrumentation is now required by January 1, 1982.

(5) Clarification item (6) has been expanded to provide licensees/applicants with more flexibility and diversity in meeting the requirements for determining liquid level indication by providing possible examples of alternative methods.

Previous guidance on the design and qualification criteria for upgrading of existing instrumentation was based on Regulatory Guide 1.97, which is still being developed. Detailed design requirements for incore thermocouples and additional instrumentation were not specified. The pertinent portions of draft Regulatory Guide 1.97 have now been included as Appendix B. Design requirements for incore thermocouples used in the ICC monitoring system are specified in Attachment 1. The only significant change in design requirements involves a relaxation of qualification requirements for display systems amenable to computer processing. This facilitates procurement of computer systems and makes feasible the use of

cathode ray tube (CRT) displays that may be needed for proper interpretation of some reactor-water-level systems under development. This relaxation can be accomplished without compromise of ICC monitoring reliability by requiring 99% availability for the display systems, by requiring postaccident maintenance accessibility for nonredundant portions of the system, and by relying on diverse methods of ICC monitoring that include completely qualified display systems.

The staff has concluded that the previous installation requirement of January 1, 1981 for additional instrumentation is unrealistic for most licensees, due to procurement and development problems associated with proposed measurement methods. Further, the staff cannot find the proposed methods acceptable for use until development programs have been completed.

Clarification

(1) Design of new instrumentation should provide an unambiguous indication of ICC. This may require new measurements or a synthesis of existing measurements which meet design criteria (item 7).

(2) The evaluation is to include reactor-water-level indication.

(3) Licensees and applicants are required to provide the necessary design analysis to support the proposed final instrumentation system for inadequate core cooling and to evaluate the merits of various instruments to monitor water level and to monitor other parameters indicative of core-cooling conditions.

(4) The indication of ICC must be unambiguous in that it should have the following properties:

    (a) It must indicate the existence of inadequate core cooling caused by various phenomena (i.e., high-void fraction-pumped flow as well as stagnant boil off); and,

    (b) It must not erroneously indicate ICC because of the presence of an unrelated phenomenon.

(5) The indication must give advanced warning of the approach of ICC.

(6) The indication must cover the full range from normal operation to complete core uncovery. For example, water-level instrumentation may be chosen to provide advanced warning of two-phase level drop to the top of the core and could be supplemented by other indicators such as incore and core-exit thermocouples provided that the indicated temperatures can be correlated to provide indication of the existence of ICC and to infer the extent of core uncovery. Alternatively, full-range level instrumentation to the bottom of the core may be employed in conjunction with other diverse indicators such as core-exit thermocouples to preclude misinterpretation due to any

inherent deficiencies or inaccuracies in the measurement system selected.

(7) All instrumentation in the final ICC system must be evaluated for conformance to Appendix B, "Design and Qualification Criteria for Accident Monitoring Instrumentation," as clarified or modified by the provisions of items 8 and 9 that follow. This is a new requirement.

(8) If a computer is provided to process liquid-level signals for display, seismic qualification is not required for the computer and associated hardware beyond the isolator or input buffer at a location accessible for maintenance following an accident. The single-failure criteria of item 2, Appendix B, need not apply to the channel beyond the isolation device if it is designed to provide 99% availability with respect to functional capability for liquid-level display. The display and associated hardware beyond the isolation device need not be Class 1E, but should be energized from a high-reliability power source which is battery backed. The quality assurance provisions cited in Appendix B, item 5, need not apply to this portion of the instrumentation system. This is a new requirement.

(9) Incore thermocouples located at the core exit or at discrete axial levels of the ICC monitoring system and which are part of the monitoring system should be evaluated for conformity with Attachment 1, "Design and Qualification Criteria for PWR Incore Thermocouples," which is a new requirement.

(10) The types and locations of displays and alarms should be determined by performing a human-factors analysis taking into consideration:

(a) the use of this information by an operator during both normal and abnormal plant conditions,

(b) integration into emergency procedures,

(c) integration into operator training, and

(d) other alarms during emergency and need for prioritization of alarms.

Applicability

This requirement applies to all operating reactors and applicants for operating license.

Implementation

This requirement must be implemented by January 1, 1982.

Type of Review

A postimplementation review will be performed for installation, and a preimplementation review will be performed prior to use.

Documentation Required

By January 1, 1981, the licensee shall provide a report detailing the planned instrumentation system for monitoring of ICC. The report should contain the necessary information, either by inclusion or by reference to previous submittals including pertinent generic reports, to satisfy the requirements which follow:

(1) A description of the proposed final system including:

(a) a final design description of additional instrumentation and displays;

(b) a detailed description of existing instrumentation systems (e.g., subcooling meters and incore thermocouples), including parameter ranges and displays, which provide operating information pertinent to ICC considerations; and

(c) a description of any planned modifications to the instrumentation systems described in item 1.b above.

(2) The necessary design analysis, including evaluation of various instruments to monitor water level, and available test data to support the design described in item 1 above.

(3) A description of additional test programs to be conducted for evaluation, qualification, and calibration of additional instrumentation.

(4) An evaluation, including proposed actions, on the conformance of the ICC instrument system to this document, including Attachment 1 and Appendix B. Any deviations should be justified.

(5) A description of the computer functions associated with ICC monitoring and functional specifications for relevant software in the process computer and other pertinent calculators. The reliability of nonredundant computers used in the system should be addressed.

(6) A current schedule, including contingencies, for installation, testing and calibration, and implementation of any proposed new instrumentation or information displays.

(7) Guidelines for use of the additional instrumentation, and analyses used to develop these procedures.

(8) A summary of key operator action instructions in the current emergency procedures for ICC and a description of how these procedures will be modified when the final monitoring system is implemented.

(9) A description and schedule commitment for any additional submittals which are needed to support the acceptability of the proposed final instrumentation system and emergency procedures for ICC.

Technical Specification Changes Required

Changes to technical specifications will be required.

References

NUREG-0578, Recommendation 2.1.3.b

Letter from H. R. Denton, NRC, to All Operating Nuclear Power Plants, dated October 30, 1979.

II.F.2 Attachment 1, Design and Qualification Criteria For Pressurized-Water Reactor Incore Thermocouples

(1) Thermocouples located at the core exit for each core quadrant, in conjunction with core inlet temperature data, shall be of sufficient number to provide indication of radial distribution of the coolant enthalpy (temperature) rise across representative regions of the core. Power distribution symmetry should be considered when determining the specific number and location of thermocouples to be provided for diagnosis of local core problems.

(2) There should be a primary operator display (or displays) having the capabilities which follow:

(a) A spatially oriented core map available on demand indicating the temperature or temperature difference across the core at each core exit thermocouple location.

(b) A selective reading of core exit temperature, continuous on demand, which is consistent with parameters pertinent to operator actions in connecting with plant-specific inadequate core cooling procedures. For example, the action requirement and the displayed temperature might be either the highest of all operable thermocouples or the average of five highest thermocouples.

(c) Direct readout and hard-copy capability should be available for all thermocouple temperatures. The range should extend from 200°F (or less) to 1800°F (or more).

(d) Trend capability showing the temperature-time history of representative core exit temperature values should be available on demand.

(e) Appropriate alarm capability should be provided consistent with operator procedure requirement.

(f) The operator-display device interface shall be human-factor designed to provide rapid access to requested displays.

(3) A backup display (or displays) should be provided with the capability for selective reading of a minimum of 16 operable thermocouples, 4 from each core quadrant, all within a time interval no greater than 6 min. The range should extend from 200°F (or less) to 2300°F (or more).

(4) The types and locations of displays and alarms should be determined by performing a human-factors analysis taking into consideration:

(a) the use of this information by an operator during both normal and abnormal plant conditions.

(b) integration into emergency procedures,

(c) integration into operator training, and

(d) other alarms during emergency and need for prioritization of alarms.

(5) The instrumentation must be evaluated for conformance to Appendix B, "Design and Qualification Criteria for Accident Monitoring Instrumentation," as modified by the provisions of items 6 through 9 which follow.

(6) The primary and backup display channels should be electrically independent, energized from independent station Class 1E power sources, and physically separated in accordance with Regulatory Guide 1.75 up to and including any isolation device. The primary display and associated hardware beyond the isolation device need not be Class 1E, but should be energized from a high-reliability power source, battery backed, where momentary interruption is not tolerable. The backup display and associated hardware should be Class 1E.

(7) The instrumentation should be environmentally qualified as described in Appendix B, item 1, except that seismic qualification is not required for the primary display and associated hardware beyond the isolater/input buffer at a location accessible for maintenance following an accident.

(8) The primary and backup display channels should be design to provide 99% availability for each channel with respect to functional capability to display a minimum of four thermocouples per core quadrant. The availability shall be addressed in technical specifications.

(9) The quality assurance provisions cited in Appendix B, item 5, should be applied except for the primary display and associated hardware beyond the isolation device.

APPENDIX B (of NUREG-0737, II.F.2)

DESIGN AND QUALIFICATION CRITERIA FOR ACCIDENT MONITORING INSTRUMENTATION

Applicability

To the extent feasible and practical (in conformance with the stipulations of Appendix A and ancillary requirements), equipment is to be installed by the specified implementation dates. Where equipment is unavailable, precluding conformance with equipment qualification and schedular requirements, the implementation dates are to be met by installation of best available equipment. In such cases, deviations are to be described and a schedule for the feasible installation of equipment in conformance with the stipulations of Regulatory Guide 1.97 (when the guide is used) is to be provided.

Appendix B is consistent with our current draft version of Regulatory Guide 1.97. We expect no further revisions to our requirements.

Criteria

1. The instrumentation should be environmentally qualified in accordance with Regulatory Guide 1.89 (NUREG-0588). Qualification applies to the complete instrumentation channel from sensor to display where the display is a direct-indicating meter or recording device. Where the instrumentation channel signal is to be used in a computer-based display, recording and/or diagnostic program, qualification applies to and includes the channel isolation device. The location of the isolation device should be such that it would be accessible for maintenance during accident conditions. The seismic portion of environmental qualification should be in accordance with Regulatory Guide 1.100. The instrumentation should continue to read within the required accuracy following, but not necessarily during, a safe shutdown earthquake. Instrumentation, whose ranges are required to extend beyond those ranges calculated in the most severe design basis accident event for a given variable, should be qualified using the following guidance.

   The qualification environment shall be based on the design basis accident events, except the assumed maximum of the value of the monitored variable shall be the value equal to the maximum range for the variable. The monitored variable shall be assumed to approach this peak by extrapolating the most severe initial ramp associated with the design basis accident events. The decay for this variable shall be considered proportional to the decay for this variable associated with the design basis accident events. No additional qualification margin needs to be added to the extended range variable. All environmental envelopes except that pertaining to the

variable measured by the information display channel shall be those associated with the design basis accident events.

The above environmental qualification requirements does not account for steady-state elevated levels that may occur in other environmental parameters associated with the extended range variables. For example, a sensor measuring containment pressure must be qualified for the measured process variable range, but the corresponding ambient temperature is not mechanistically linked to that pressure. Rather, the ambient temperature value is the bounding value for design basis accident events analyzed in Chapter 15 of the final safety analysis report (FSAR). The extended range requirement is to ensure that the equipment will continue to provide information should conditions degrade beyond those postulated in the safety analysis. Since variable ranges are nonmechanistically determined, extension of associated parameter levels is not justifiable and has, therefore, not been required.

2. No single failure within either the accident-monitoring instumentation, its auxiliary supporting features, or its power sources concurrent with the failure that are a condition or result of a specific accident should prevent the operator from being presented the information necessary for him to determine the safety status of the plant and to bring the plant to a safe condition and maintain it in a safe condition following that accident. Where failure of one accident-monitoring channel results in ambiguity (that is, the redundant displays disagree) which could lead the operator to defeat or fail to accomplish a required safety function, additional information should be provided to allow the operator to deduce the actual conditions in the plant. This may be accomplished by: (a) providing additional independent channels of information of the same variable (addition of an identical channel), or (b) providing an independent channel which monitors a different variable bearing a known relationship to the multiple channels (addition of a diverse channel), or (c) providing the capability, if sufficient time is available, for the operator to perturb the measured variable and determine which channel has failed by observation of the response on each instrumentation channel. Redundant or diverse channels should be electrically independent, energized from station Class 1E power source, and physically separated in accordance with Regulatory Guide 1.75 up to and including any isolation device. At least one channel should be displayed on a direct-indicating or recording device. (NOTE: Within each redundant division of a safety system, redundant monitoring channels are not required.)

3. The instrumentation should be energized from station Class 1E power sources.

4. An instrumentation channel should be available prior to an accident except as provided in Paragraph 4.11, "Exemption," as defined in IEEE Std 279 or as specified in technical specifications.

5. The recommendations of the following regulatory guides pertaining to quality assurance should be followed:

   1.28 "Quality Assurance Program Requirements" (Design and Construction)

   1.30 "Quality Assurance Requirements for the Installation, Inspection, and Testing of Instrumentation and Electric Equipment"

   1.38 "Quality Assurance Requirements for Packaging, Shipping, Receiving, Storage, and Handling of Items for Water-Cooled Nuclear Power Plants"

   1.58 "Qualification of Nuclear Power Plant Inspection, Examination, and Testing Personnel"

   1.64 "Quality Assurance Requirements for the Design of Nuclear Power Plants"

   1.74 "Quality Assurance Terms and Definitions"

   1.88 "Collection, Storage, and Maintenance of Nuclear Power Plant Quality Assurance Records"

   1.123 "Quality Assurance Requirements for Control of Procurement of Items and Services for Nuclear Power Plants"

   1.144 "Auditing of Quality Assurance Programs for Nuclear Power Plants"

   Task RS 810-5 "Qualification of Quality Assurance Program Audit Personnel for Nuclear Power Plants" (Guide number to be inserted.)

   Reference to the above regulatory guides (except Regulatory Guides 1.30 and 1.38) are being made pending issuance of a regulatory guide endorsing NQA-1 (Task RS 002-5), now in progress.

6. Continuous indication (it may be by recording) display should be provided at all times. Where two or more instruments are needed to cover a particular range, overlapping of instrument span should be provided.

7. Recording of instrumentation readout information should be provided. Where trend or transient information is essential for operator information or action, the recording should be analog stripchart or stored and displayed continuously on demand. Intermittent displays, such as data loggers and scanning recorders, may be used if no significant transient response information is likely to be lost by such devices.

8. The instruments should be specifically identified on the control panels so that the operator can easily discern that they are intended for use under accident conditions.

9. The transmission of signals from the instrument or associated sensors for other use should be through isolation devices that are designated as part of monitoring instrumentation and that meet the provisions of the document.

10. Means should be provided for checking, with a high degree of confidence, the operational availability of each monitoring channel, including its input sensor, during reactor operation. This may be accomplished in various ways; for example:

    (a) By perturbing the monitored variable.

    (b) By introducing and varying, as appropriate, a substitute input to the sensor of the same nature as the measured variable.

    (c) By cross-checking between channels that bear a known relationship to each other and that have readouts available.

11. Servicing, testing, and calibrating programs should be specified to maintain the capability of the monitoring instrumentation. For those instruments where the required interval between testing will be less than the normal time interval between generating station shutdowns, a capability for testing during power operation should be provided.

12. Whenever means for removing channels from service are included in the design, the design should facilitate administrative control of the access to such removal means.

13. The design should facilitate administrative control of the access to all setpoint adjustments, module calibration adjustments, and test points.

14. The monitoring instrumentation design should minimize the development of conditions that would cause meters annunciators, recorders, alarms, etc., to give anomalous indications potentially confusing to the operator.

15. The instrumentation should be designed to facilitate the recognition, location, replacement, repair, or adjustment of malfunctioning components or modules.

16. To the extent practical, monitoring instrumentation inputs should be from sensors that directly measure the desired variables.

17. To the extent practical, the same instruments should be used for accident monitoring as are used for the normal operations of the plant to enable the operator to use, during accident situations,

instruments with which the operator is most familiar. However, where the required range of monitoring instrumentation results in a loss of instrumentation sensitivity in the normal operating range, separate instruments should be used.

18. Periodic testing should be in accordance with the applicable portions of Regulatory Guide 1.118 pertaining to testing of instruments channels.

APPENDIX B

GENERIC SYSTEM DESIGN DESCRIPTIONS

This section provides a preliminary description of a generic Accident Monitoring System (AMS) approach to address II.F.2, Inadequate Core Cooling (ICC) requirements. The AMS consists of two major subsystems: (1) Critical Function Monitoring System (CFMS) and (2) Qualified Safety Parameter Display System (QSPDS). A functional overview of the AMS highlighting the ICC sensor inputs is shown in Fig. 18. The reactor vessel liquid inventory above the core and the fluid conditions at various locations in the primary system will be measured by RTDs, pressurizer pressure sensors, reactor vessel level HJTCs, and CETs. As shown in Fig. 18, the ICC sensors are input to the Qualified Safety Parameter Display System (QSPDS) for processing and then integrated into the Primary Safety Parameter Display in the Critical Function Monitoring System (CFMS) portion of the AMS.

The detailed descriptions included in this Appendix were adapted from the design descriptions submitted by the Combustion Engineering Owners Group in the Combustion Engineering Standard Plant Safety Analysis Report (CESSAR-F). Descriptions of the CFMS and the QSPDS are included in the CESSAR-F report. These systems are not under review in this report, but the descriptions which apply to the display of the ICC parameters have been abstracted to describe the generic ICC display system provided by C-E. We have attempted to provide a complete picture of possible options for the ICC related instumentation and display systems offered by Combustion Engineering. No one plant may have chosen to include every option described below, so that each application will be reviewed individually.

The detailed design description of each ICC instrument is described in this section which addresses:

1. Sensors design,
2. Signal processing and display design

Figure 18 is the functional diagram for the ICC instrument systems. Each instrument system consists of two safety grade channels from sensors through signal processing equipment. The outputs of processing equipment systems feeding the primary display are isolated to separate safety grade and nonsafety grade systems. Channelized safety grade backup displays are included for each instrument system. The following sections present details of the design.

ORNL-DWG 82-10209

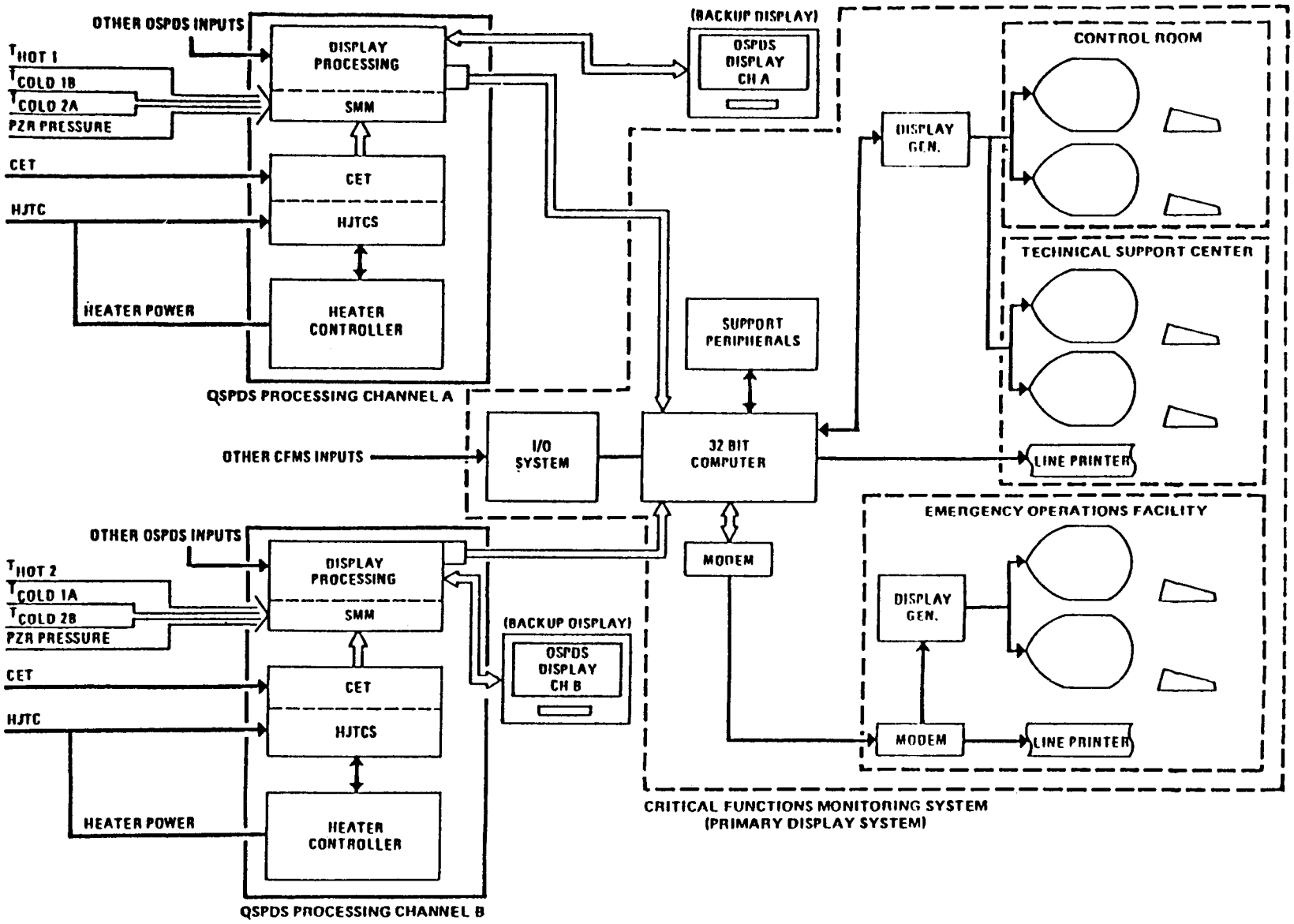

Fig. 18. Functional drawing of C-E's ICC instrumentation system including sensor, processing, and display systems (taken from ref. 7).

APPENDIX B.1

SUBCOOLED MARGIN MONITOR

A two-channel subcooled margin monitor system (SMMS) is incorporated into C-E ICC instrumentation design to provide on-line control room indication of reactor coolant saturation conditions. The SMMS is designed for use as post-accident monitoring instrumentation and is designed to safety grade Seismic Class I, and Quality Class II standards.

SATURATION MARGIN MONITOR

Saturation Margin Monitoring (SMM), provides information to the reactor operator on (1) the approach to and existence of saturation and (2) existence of core uncovery

The SMM includes inputs from RCS cold end hot leg temperatures measured by RTDs, the temperature of the maximum of the top three Unheated Junction Thermocouples (UHJTC), and pressurizer pressure sensors as shown in Fig. 19. The UHJTC input comes from the output of the HJTCS processing units. In summary, the sensor inputs are as follows:

Input	Range
Pressurizer Pressure	0-4000 psia
Cold Leg Temperature	0-750°F
Hot Leg Temperature	0-750°F
Maximum UHJTC Temperature of top three sensors (from HJTC processing)	200-2300°F
Representative CET Temperature	200-2300°F

The QSPDS processing equipment will perform the following saturation margin monitoring functions:

1. Calculate the saturation margin.

   The saturation temperature is calculated from the minimum pressure input. The temperature subcooled or superheat margin is the difference between saturation temperature and the sensor temperature input. Three temperature subcooled or superheat margin presentations will be available. These are as follows:

   a. RCS saturation margin - the temperature saturation margin based on the difference between the saturation temperature and the maximum temperature from the RTDs in the hot and cold legs.

ORNL-DWG 82-10207

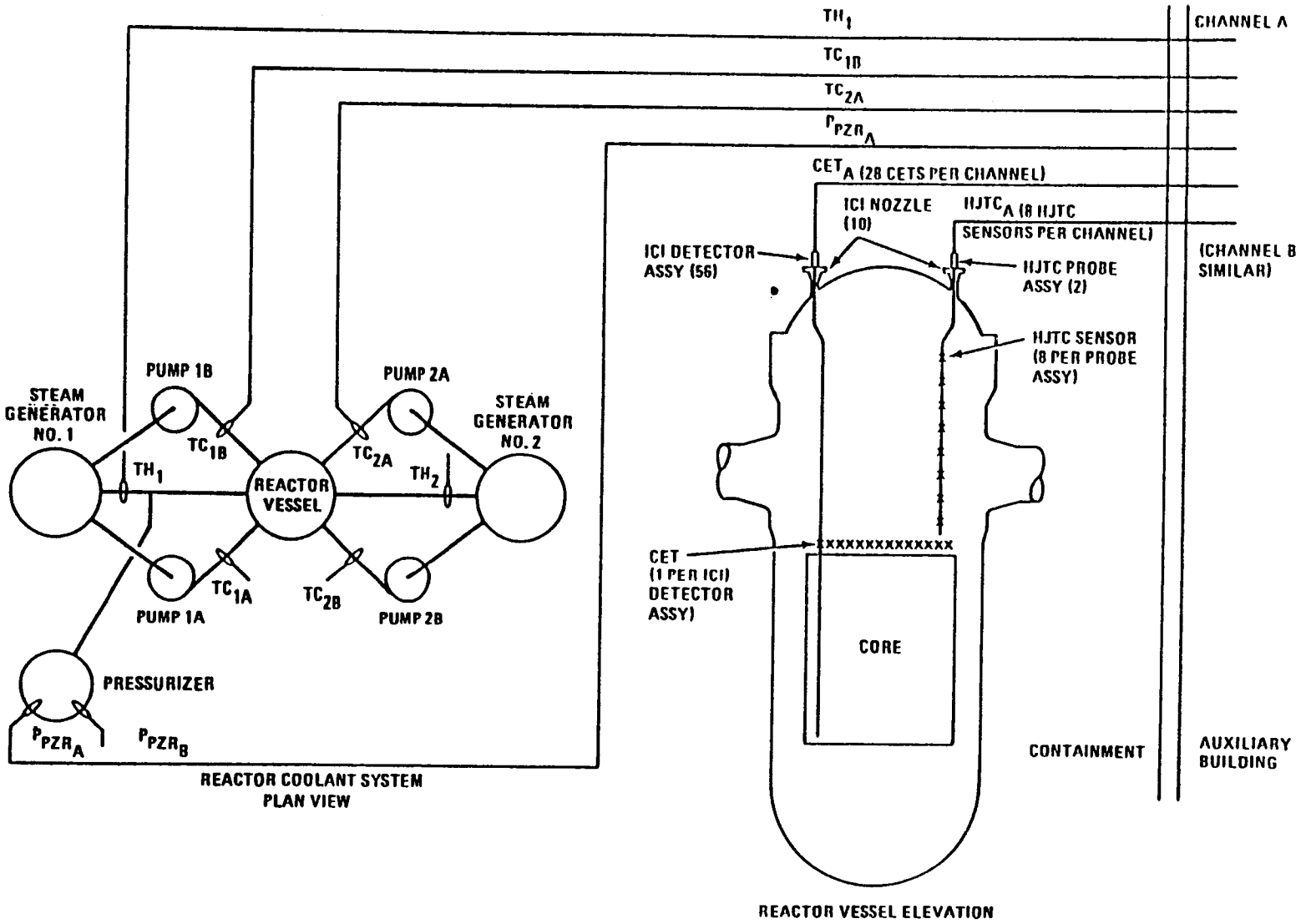

Fig. 19. Schematic drawing of sensor inputs from the primary coolant system to the SMM system (taken from ref. 7).

b. Upper head saturation margin - temperature saturation margin based on the difference between the saturation temperature and UHJTC temperature (based on the maximum of the top three UHJTC).

c. CET saturation margin - temperature saturation margin based on the difference between the saturation temperature and the representation core exit temperature calculated from the CETs (Sect. 2.2.3).

2. Process sensor outputs for determination of temperature saturation margin.

3. Provide an alarm output for an annunciator when temperature saturation margin reaches a preselected (to be determined) setpoint for RCS or upper head saturation margin. CET saturation margin is not alarmed to avoid possible spurious alarms.

The SMM processes the temperature and pressure inputs over the following ranges: CET temperature from 200°F to 2300°F, the unheated HJTC temperature from 100°F to 1800°F, the hot leg and cold leg RTD temperatures from 0°F to 710°F, and the pressurizer pressure from 0 psia to 3000 psia. The saturation temperature and pressure are calculated from a saturation curve derived from the 1967 ASME steam tables and an interpolation routine.

Saturation Margin Display

The following information is presented on the primary display:

1. Pressure margin to saturation
2. Minimum temperature margin to saturation
3. Temperature margin to saturation for each temperature source (i.e., RTD, HJTC or CET)
4. Minimum pressure

The following information is presented on the backup displays:

1. Pressure margin to saturation
2. Temperature margin to saturation
3. Temperature inputs
4. Pressure inputs

The following information is presented on the primary (CFMS) and backup (QSPDS) display:

1. Temperature and pressure saturation margins for RCS, Upper Head, Core Exit Temperature.
2. Temperatures and pressure inputs.

Heater Junction Thermocouple System

The design description of the HJTC system is given in Sect. II.C. Additional information is given here about the processing and display system.

B.2 HEATED JUNCTION THERMOCOUPLE

The QSPDS processing equipment performs the following functions for the HJTC:

1. Determine collapsed liquid level above core.

   The heated and unheated thermocouples in the HJTC are connected in such a way that absolute and differential temperature signals are available. When liquid water surrounds the thermocouples, their temperature and emf output are approximately equal. The emf output therefore, is approximately zero. In the absence of liquid, the thermocouple temperatures and output voltages become unequal, causing the differential emf to rise. When the differential emf of the individual HJTC rises above a predetermined setpoint, liquid inventory does not exist at this HJTC position.

2. Determine the maximum upper plenum/head fluid temperature of the top three unheated thermocouples for use as an output to the SMM calculation. (The temperature processing range is from 100 to 2300° F).

3. Process input signals to display collapsed liquid level and unheated junction thermocouple temperatures.

4. Provide an alarm output when any of the HJTC detects the absence of liquid level.

5. Provide control of heater power for proper HJTC output signal level.

HEATED JUNCTION THERMOCOUPLE SYSTEM DISPLAY

The following information is displayed on the CFMS and QSPDS displays:

1. Liquid inventory level above the fuel alignment plate derived from the eight discrete HJTC positions.

2. Eight discrete HJTC positions indicating liquid inventory above the fuel alignment plate.

3. Inputs from the HJTCs:

   a. Unheated junction temperature at the eight positions.

b. Heated junction temperature at the eight positions.
c. Differential junction temperature at the eight positions.

B.3 Core Exit Thermocouples (CET)

The core exit thermocouples provide a measure of core heatup via measurement of core exit steam temperature.

The design of the System 80 In-core Instrumentation (ICI) system shown in Fig. 20 will be modified to include Type K (Chromel-Alumel) thermocouples within each of the ICI detector assemblies. These Core Exit Thermocouples (CET) monitor the temperature of the reactor coolant as it exits the fuel assemblies. The core locations of the ICI detector assemblies are shown in Fig. 21.

The CETs have a usable temperature range from 200° F up to 2300° F.

The QSPDS performs the following CET processing function:

1. Process core exit thermocouple inputs for display.

2. Calculate a representative core exit temperature. Although not finalized, this temperature will be either the maximum valid core exit temperature or the average of the five highest valid core exit temperatures.

3. Provide an alarm output when temperature reaches a preselected value.

4. Process CETs for display of CET temperature and superheat.

These functions are intended to meet the design requirements of NUREG-0737, II.F.2 Attachment 1.

CORE EXIT THERMOCOUPLE DISPLAY

The following information is displayed on the CFMS display:

1. A spatially oriented core map indicating the temperature at each of the CETs.

2. A selective reading of CET temperatures.

3. The representative core exit temperature.

The following information is displayed on the QSPDS display:

1. Representative core exit temperature.

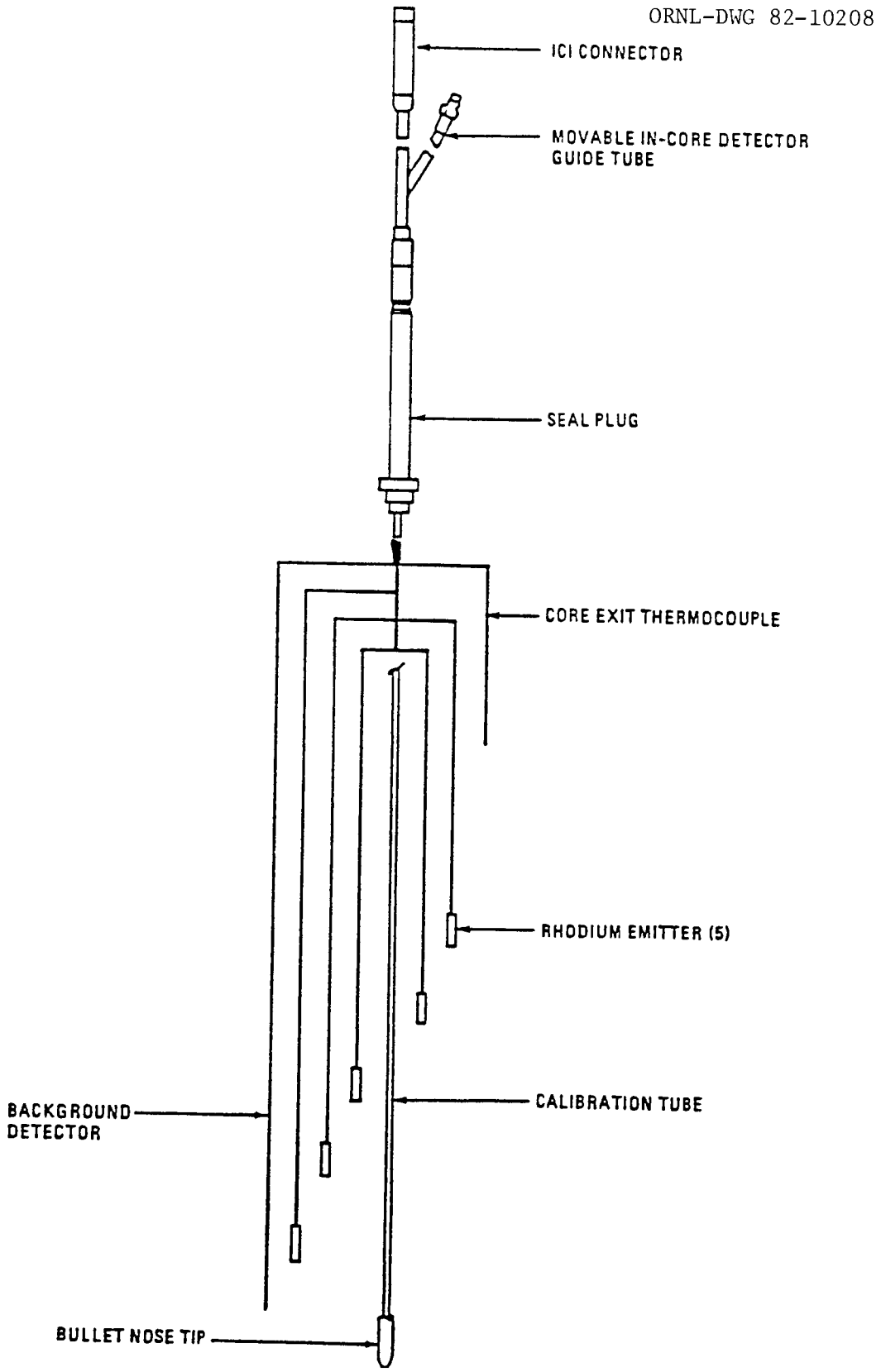

Fig. 20. Schematic drawing of C-E in-core instrumentation detector assembly showing the location of the core exit thermocouple and relative locations of the SPND's (taken from ref. 7).

ORNL-DWG 82-10205

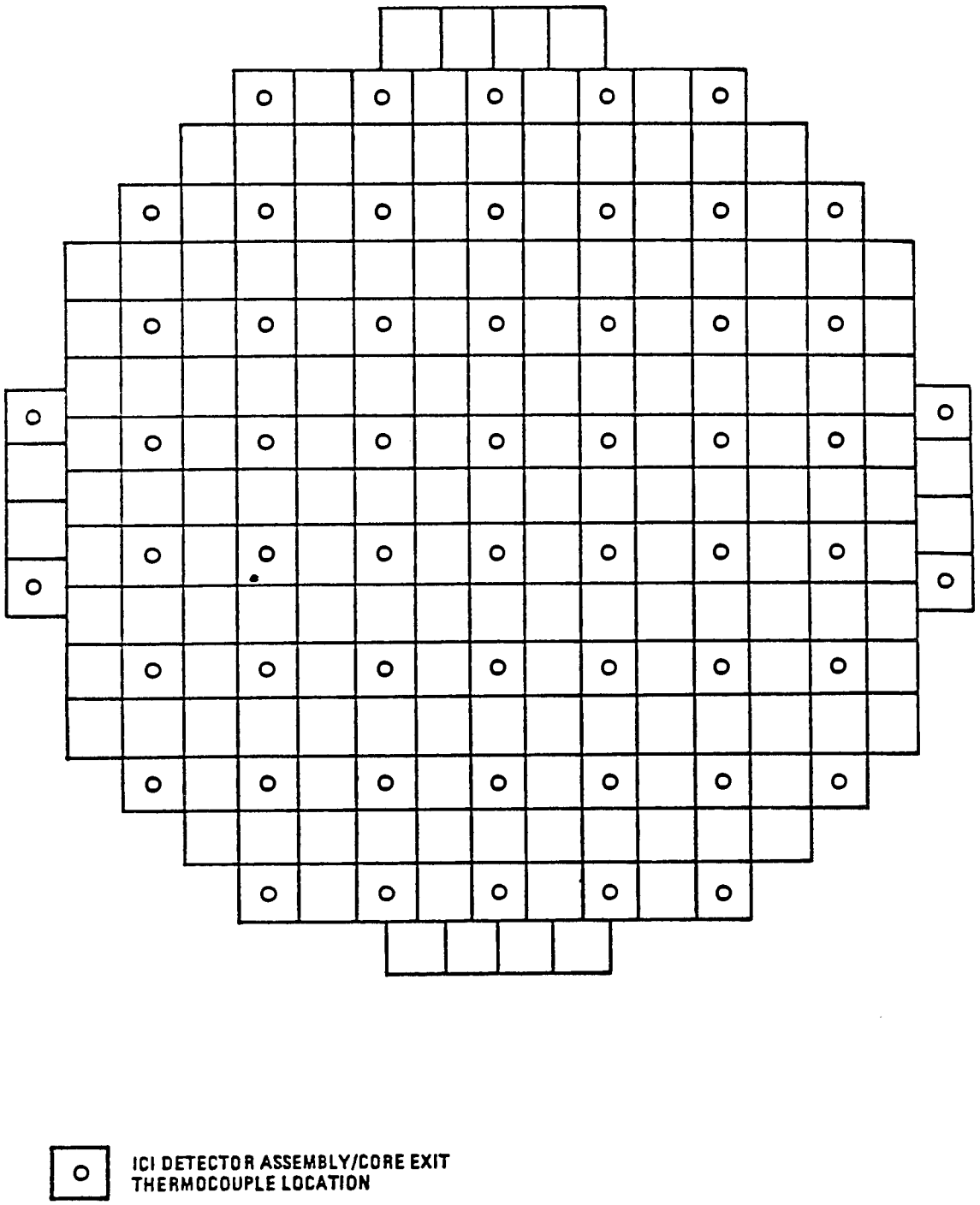

Fig. 21. Schematic drawing of a reactor core showing typical locations of in-core instrumentation assemblies which include core exit thermocouples (taken from ref. 7).

2. A selective reading of the CET temperatures.

3. A listing of all core exit temperatures.

APPENDIX B.3

The design descriptions of C-E's ICC intrumentation and display systems have been adapted from the CESSAR-F submitted by the Combustion Engineering owners group. The description of the display system is divided as follows:

a. Accident Montoring System
   i. CFMS displays and functions
   ii. QSPDS

b. Processing and Display Description
   i. SMM
   ii. HJTC
   iii. CET

B.3.a AMS Description

Background

The Accident Monitoring System (AMS) provides unified systems approach to meet the NRC's processing and display requirements for accident monitoring instruments. The NRC has provided numerous requirements as an outgrowth of studies performed following the accident at TMI-2. Included among these are additional requirements on accident monitoring, emergency response facilities, inadequate core cooling, and control room upgrade.

System Description

The Accident Monitoring System (AMS) consists of two major subsystems:

1. Critical Function Monitoring System (CFMS).

2. Qualified Safety Parameter Display System (QSPDS) (including processing and display for Inadequate Core Cooling (ICC detection instruments).

The AMS overview is depicted in Fig. 18.

B.3.a.i CFMS. The CFMS is the heart of the integrated AMS and is designed to meet criteria set forth in NUREG-0696; "Functional Criteria for Emergency Response Facilities." The CFMS is a dedicated, computer based plant information and display system. Specifically, the CFMS:

1. Provides primary SPDS/ICC display in Control Room, Technical Support Center (TSC), and Emergency Operations Facility (EOF).

2. Includes the Historical Data Storage and Retrieval (HDSR) System.

3. Provides the capability for transmitting data to the NRC Operations Center via the Nuclear Data Link (NDL).

4. Provides the capability to display Regulatory Guide 1.97 and 1.23 input parameters in the Control Room, TSC and EODF.

The CFMS man/machine interface includes two color-graphic CRTs in the Control Room, two color-graphic CRTs and a line printer in the TSC, and two color-graphic CRTs and a line printer in the EOF. (see Fig. 18) A keyboard is associated with each supplied CRT. Following is a design description of the CFMS.

Design Bases

The CFMS design bases are divided into three areas: functional, hardware, and software.

Functional Design Bases

A. The CFMS provides the capability to display the status of the following critical functions:

1. Core Reactivity Control

2. Core Heat Removal Control

3. Reactor Coolant System Inventory Control

4. Reactor Coolant System Pressure Control

5. Reactor Coolant System Heat Removal Control

6. Containment Pressure/Temperature Control

7. Containment Isolation Control

8. Radiation Emission Control

B. The CFMS provides alarm for deviations of the critical functions.

C. The CFMS provides the user with concise, understandable, integrated information to assist in assessing plant status during all modes of plant operation. The CFMS displays use proven human-engineering principles.

D. The CFMS can store time tagged values of plant process signals for a minimum of 16 h.

E. The CFMS can determine the alarm status of each process parameter.

1. Each analog process parameter has the capability of 8 individual alarm settings.

- High-out of range alarm
- High-high alarm
- High alarm
- Low alarm
- Low-low alarm
- Low out of range alarm

2. Each digital process parameter has the capability of having one of its two states be alarmed.

F. The CFMS displays information to the operator by means of a color cathode ray tube (CRT). The CFMS can utilize alphanumeric data formats, shapes, symbols, color coding, and blinking for information display in accordance with established human engineering guidelines.

G. The CFMS can utilize more than 20 fixed format displays (pages) for information presentation. Page selection is controlled by the operator. Each display station (CRT and keyboard) can independently call up any fixed format display page in the repertoire.

H. The CFMS can activate plant annunciators.

I. The CFMS can provide a simultaneous trend of up to four analog parameters. Analog outputs are provided for strip chart recording.

Hardware Design Bases

A. The CFMS hardware has sufficient calculational and memory capacity to support the critical function monitoring requirements.

B. The CFMS input hardware is capable of measuring a minimum of 600 plant process signals. Analog signals are measured with an overall accuracy of 0.25%.

C. The CFMS hardware can provide output to:

Six independent CRT display stations
Analog output for strip chart recorder
Digital output for alarm annunciation

D. The operator can interact with the CFMS through the use of a keyboard. The operator can perform the following functions:

Display select
Alarm acknowledge (only for control room operator)
Alarm reset
Trend selection
Historical data recall and trending

Hierarchy

A. To effectively organize the information presented by the CFMS a top down, three level hierarchy is used.

B. The CFMS display pages are arranged in a three level hierarchy which consists of:

C. Level 1 display pages provide overview information about both the plant and the CFMS. Level 1 displays are primarily alphanumeric.

D. The Level 1 display pages include:

1. Display Directory

An alphanumeric display which lists the display page titles and page numbers.

2. Current Alarm List

An alphanumeric display which lists parameter alarms in chronological order. As alarms clear they are removed from the Current Alarm List. Pressing the RESET button compresses the remaining alarms. Computer alarms are also displayed on the Current Alarm List.

3. Critical Function Monitor Page

The Criticial Function Monitor Page displays each critical function, its alarm state and the presence of a failed sensor in the alarm logic.

4. Failed Sensor List

An alphanumeric alarm list which displays all input sensors which have failed out of range. Sensor point ID, English descriptor, time of failure and substituted value if appropriate are displayed. Indication is also made if the sensor is used for Critical Function Alarm purposes.

E. Level II display pages include:

- Core Systems Display
- Primary Systems Display
- Secondary Systems Display
- Containment Systems Display

F. Level III display pages include:

- Main Steam System Display
- Feedwater System Display
- Emergency Feedwater System Display
- Letdown Charging Display (CVCS-1)
- Boric Acid System Display (CVCS-2)
- Pressurizer Display
- Safety Injection System Display
- Containment Heat Removal Systems Display
- Containment Isolation Systems Display
- Shutdown Cooling System Display

G. Each CFMS display page is assigned a unique three digit page number. The first digit of the page number indicates the level of the display.

H. Movement through the display hierarchy is provided by using the PAGE, SECTOR, EXECUTE, FORWARD, and BACK keys on the CFMS alphanumeric keyboard.

I. Lateral movement through each level is provided by using the FORWARD and BACK keys. Each level page loop is closed so that paging forward from the last page moves the first page to the display screen.

J. Vertical movement between levels is made by using the SECTOR key followed by the sector number and the EXECUTE key. This key combination moves the display page associated with that sector to the screen. Each display page has up to nine available sectors.

K. When the SECTOR key alone is pressed, sector indicators are displayed which indicate all sectors available from the present display. Sector indicators are removed from the display after 30 s.

L. The key stroke combination of SECTOR and 0 returns the previous high level display to the screen. If the present page was reached by direct paging a default upper level page returns to the screen when SECTOR 0 is pressed.

M. Direct paging is provided to go directly to any page in the display hierarchy. Pressing the PAGE key followed by a three digit page number and the EXECUTE key displays the selected page.

N. Trend displays are accessed using a dedicated function button. One dedicated function button is provided for each trend page.

O. Error messages are provided for illegal page or sector commands. Error messages are removed after 5 s.

Trend Displays

A. Two trend display pages provide graphical, time based trends.

B. Each trend display page can trend up to four parameters.

C. Parameters to be trended are assigned from the CFMS Programmers Console and the CFMS User Display Station.

D. All four trends on a display page utilize the same time scale. Each trend display page may have a different time scale.

E. Alphanumeric annotation is provided on each trend page. This includes scales, axes, and labels.

F. Each trend page is displayed by pressing a function key which provides direct access to the trend. Trend pages are not sectored to but may be accessed by direct paging. The trend function buttons may be activated at any time. Return from the trend pages is provided by a RETURN FROM TREND button which restores the page that was active when a trend was requested.

Historical Data Storage and Retrieval (HDSR)

A. All inputs to the CFMS are stored for review by users.

B. At least 14 h of data is directly available to users. Data of more than 14 h duration can be stored on the tape recorder system. Historical data can be transferred between the CFMS and tape recorder without interruption to the CFMS functions.

C. Historical data can be trended from the CFMS programmer's console and the CFMS user display station.

D. Historical data can be printed out with the line printer in a log format.

Alarms

The CFMS alarms annunciate specific information which is of importance to the user.

A. Five classifications of alarms are provided:

- Critical Function Alarms
- Parameter Alarms
- Sector Alarms
- Failed Sensor Alarms
- Computer Failure Alarms

Critical Function Alarms

1. Critical function alarms are provided on the Level 1 Critical Functions Monitor Page. These alarms are generated whenever alarm logic indicates that a critical function is not being maintained.

2. Critical function alarms are only set when the required input signals are of good quality.

3. Critical function alarms are only cleared when the required input signals are of good quality.

4. Critical function alarm logic consists of software algorithms composed of arithmetic, comparison and Boolean capability.

5. Critical function alarms provide an output signal to go to a supplied audible annunciator.

6. Critical function alarms are annunciated by color change and blink.

7. Critical function alarms retain the alarm color following acknowledgement. The audible alarm and blink are suppressed following acknowledgement.

8. Critical function alarms are acknowledged by the ACKNOWLEDGE button on the primary display station in the control room. Only this one display station is capable of acknowledging alarms. The ACKNOWLEDGE button only acknowledges CFMS alarms and does not affect other control room alarms.

9. Critical function alarm status is displayed on all display pages using a 3 × 3 annunciator matrix.

10. A visual indication of a failed sensor input to the critical function alarm logic is provided on each page.

11. Critical function alarms displayed on the Level I page include time and an English description of the alarm.

Parameter Alarms

1. Parameter alarms are provided whenever a parameter exceeds a High-High, High, Lo, Lo-Lo setpoint.

2. High-High, High, Lo, and Lo-Lo setpoints with deadbands are required for each parameter alarm.

3. Parameter alarms are annunciated by color change and blink.

4. Parameter alarms are not audibly annunciated.

5. Parameter alarm blink is suppressed when the ACKNOWLEDGE button is pressed.

6. All Parameter Alarms are listed on the Current Alarm List.

7. The Current Alarm list includes:

   Name - Alphanumeric description of alarm
   Current Value - the currently measured value of the process parameter in engineering units
   Setpoint - the alarm violated setpoint
   Severity - the severity indicator of the alarm (Hi-Hi, Hi, Lo, Lo-Lo)

Sector Arlarms

1. Sector alarms are provided to alert the user that important changes have occurred on a lower level page. Up to nine sector alarms may appear on each page except Level III pages.

2. Sector alarms blink until acknowledged. Sector alarms remain lit until cleared. Sector alarms are not audibly annunciated.

3. Sector alarms are displayed in yellow when alarmed.

Failed Sensor Alarms

1. In order to ensure a high availability system a failed sensor alarm is generated when a FAILED HIGH OUT OF RANGE or FAILED LOW OUT OF RANGE sensor is recognized. The failed sensor alarm message is

written at the bottom of each page and remains until cleared. Each time a failed sensor is recognized the audible alarm output is activated and the alarm message blinked until acknowledged.

2. All failed sensors are listed on the failed sensor list.

3. Out-of-range setpoints are required to alarm the failed sensors.

Computer Alarms

Alarm outputs indicating computer malfunction are provided. These alarms generate an annunciator window and audible output signal. An alarm shall be provided to indicate failure of the CFMS. The presence of a computer alarm is indicated on every display page.

User Error Messages

A. User error messages are displayed on the bottom of each display as appropriate. User error messages remain on the display for 5 s and are then removed.

B. User error messages are generated by improper page or sector requests.

HARDWARE DESCRIPTION

A block diagram of the configuration is provided in Fig. 18.

User Interface Stations

A. User interface stations are provided. Each user interface station consists of:

A high resolution color CRT monitor
An alphanumeric keyboard
Function Keys to include:

- EXECUTE
- SECTOR
- PAGE
- FORWARD
- BACK
- ACKNOWLEDGE
- TREND 1
- TREND 2
- RETURN FROM TREND

- CURRENT ALARM LIST COMPRESSION (RESET)
- HDSR

Numeric Key Pad

B. Numeric keypad and function keys must be arranged in a fashion which is consistent with human factors considerations.

B.3.a.ii QSPDS. The two QSPDS channels are powered by Channel A and B station vital busses. Each QSPDS is electrically independent and physically separated according to the Regulatory Guide 1.75 up to and including the isolation for the data links to the CFMS. The QSPDS is qualified to seismic and environmental standards.

The QSPDS consists of two redundant channels to void interruptions of display due to a single failure. This two safety grade channel configuration provides QSPDS availability greater than 99%. If in the remote chance that one complete QSPDS channel fails, the operator has:

1. Additional channels of ICC sensor inputs for cold leg temperature, hot leg temperature, and pressurizer pressure on the control board separate from the QSPDS.

2. The HJTCS and CET have multiple sensors in each channel for the operator to correlate and check inputs.

3. The HJTCS sensor output may be tested by adjusting the heater power.

The QSPDS is available during normal operation.

The QSPDS has two functions:

1. Sensor input processing
2. Display of safety parameters

The sensor input processing consists of:

1. Checking that the sensor inputs are within range
2. Converting sensor inputs into display units
3. Calculating parameters from the sensor inputs (if required)
4. Sounding alarms when a parameter exceeds setpoint.

The QSPDS processing equipment includes operator interfaces for equipment testing, setup, and maintenance. The processing for the ICC instrumentation will have surveillance testing and diagnostic capabilities. Automatic on-line surveillance tests will continuously check for specified hardware and software malfunctions. The on-line automatic surveillance tests as a minimum will indicate inputs that are out of range and computer hardware malfunctions. The malfunctions will be indicated through the operator interface. A manual on-line diagnostic capability

will be incorporated to aid the operator in locating the source of these malfunctions.

The QSPDS displays present the most reliable basic information for each of the ICC instrument systems. The QSPDS displays are designed:

1. To give primary instrument indications in the remote chance that the CFMS display becomes inoperable.

2. To provide confirmatory indications to the CFMS display.

3. To aid in surveillance tests and diagnostics.

The QSPDS displays (located in the control room) will also incorporate human factors engineering. The alphanumeric display is a liquid plasma display with paging capabilities to display all the ICC instrument outputs. The two channels of QSPDS display present direct and continuous safety grade indication of the ICC detection parameters. The CFMS provides trending capability for all ICC parameters. The QSPDS displays the following types of information:

1. Safety parameters according to safety function.

2. Additional safety parameter information on other pages (such as sensor inputs needed to calculate safety parameters).

3. Alarm indication.

B.3.b Processing and Display Description

The following sections describe the processing and display for each of the ICC detection instruments.

B.3.b.i Subcooled Margin Monitor. The SMM processing is described in Sect. B.1 of this appendix above.

B.3.b.ii The Heated Junction Thermocouple System. The processing for the HJTC is described in Sect. B.2 of this appendix above.

B.3.b.iii Core Exit Thermocouple System. The processing for the CETs is described in Sect. B.3 of this appendix above.

APPENDIX C. MODEL TECHNICAL SPECIFICATIONS

INSTRUMENTATION

ACCIDENT MONITORING INSTRUMENTATION

LIMITING CONDITION FOR OPERATION

3.3.3.6 The accident monitoring instrumentation channels shown in Table 3.3-10 shall be OPERABLE.

APPLICABILITY: MODES 1, 2, and 3.

ACTION:

a. With the number of OPERABLE accident monitoring channels less than the Required Number of Channels shown in Table 3.3-10, either restore the inoperable channel to OPERABLE status within 7 h or be in HOT SHUTDOWN within the next 12.

b. With the number of OPERABLE accident monitoring cahnnels less than the Minimum Channels OPERABLE requirements of Table 3.3-10; either restore the inoperable channel(s) to OPERABLE status within 48 h or be in at least HOT SHUTDOWN within the next 12.

c. The provisions of Specification 3.0.4 are not applicable.

SURVEILLANCE REQUIREMENTS

4.3.3.6 Each accident monitoring instrumentation channel shall be demonstrated OPERABLE by performance of the CHANNEL CHECK and CHANNEL CALIBRATION operations at the frequencies shown in Table 4.3-7.

3/4 LIMITING CONDITIONS FOR OPERATION AND SURVEILLANCE REQUIREMENTS

3/4.0 APPLICABILITY
LIMITING CONDITION FOR OPERATION

3.0.1 Compliance with the Limiting Conditions for Operation contained in the succeeding specifications is required during the OPERATIONAL MODES or other conditions specified therein; except that upon failure to meet the Limiting Conditions for Operation, the associated ACTION requirements shall be met.

Table 3.3-10. Accident monitoring instrumentation

	INSTRUMENT	REQUIRED NUMBER OF CHANNELS	MINIMUM CHANNELS OPERABLE
1.	Containment Pressure - Narrow Range	2	1
2.	Containment Pressure - Wide Range	2	1
3.	Reactor Coolant Outlet Temperature - T_{HOT} (Wide Range)	2	1
4.	Reactor Coolant Inlet Temperature - T_{Cold} (Wide Range)	2	1
5.	Pressurizer Pressure - Wide Range	2	1
6.	Pressurizer Water Level	2	1
7.	Steam Line Pressure	2/steam generator	1/steam generator
8.	Steam Generator Water Level - Narrow Range	1/steam generator	1/steam generator
9.	Steam Generator Water Level - Wide Range	2/steam generator	1/steam generator
10.	Refueling Water Storage Tank Water Level	2	1
11.	Auxiliary Feedwater Flow Rate	1/steam generator	1/steam generator
12.	Reactor Coolant System Subcooling Margin Monitor	2	1
13.	Safety Valve Position Indicator	2/valve	1/valve
14.	Spray System Temperature	2	1
15.	Spray System Pressure	2	1
16.	LPSI Header Temperature	2	1
17.	Containment Temperature	2	1
18.	Containment Water Level - Narrow Range	2	1
19.	Containment Water Level - Wide Range	2	1
20.	Core Exit Thermocouples	7/core quadrant	4/core quadrant
*21.	Containment Area Radiation - High Range	2	1
*22.	Main Steam Line Area Radiation	1/steam generator	1/steam generator
23.	Condenser Air Ejector Noble Gas Monitor - Wide Range	1	1
24.	Purge/Vent Stack Noble Gas Monitor - Wide Range	1/stack	1/stack
25.	Cold Leg HPSI Flow	2/cold leg	1/cold leg
26.	Hot Leg HPSI Flow	1/hot leg	1/hot leg
27.	Reactor Vessel Coolant Level Monitor	2	1

* NUREG-0737 item to be operational by January 1, 1982

Table 4.3-7. Accident monitoring instrumentation surveillance requirements

	INSTRUMENT	CHANNEL CHECK	CHANNEL CALIBRATION
1.	Containment Pressure - Narrow Range	M	R
2.	Containment Pressure - Wide Range	M	R
3.	Reactor Coolant Outlet Temperature - T_{Hot} (Wide Range)	M	R
4.	Reactor Coolant Inlet Temperature - T_{Cold} (Wide Range)	M	R
5.	Pressurizer Pressure (Wide Range)	M	R
6.	Pressurizer Water Level	M	R
7.	Steam Line Pressure	M	R
8.	Steam Generator Water Level (Narrow Range)	M	R
9.	Steam Generator Water Level (Wide Range)	M	R
10.	Refueling Water Storage Tank Water Level	M	R
11.	Auxiliary Feedwater Flow Rate	M	R
12.	Reactor Coolant System Subcooling Margin Monitor	M	R
13.	Safety Valve Position Indicator	M	R
14.	Spray System Temperature	M	R
15.	Spray System Pressure	M	R
16.	LPSI Header Temperature	M	R
17.	Containment Temperature	M	R
18.	Containment Water Level (Narrow Range)	M	R
19.	Containment Water Level (Wide Range)	M	R
20.	Core Exit Thermocouples	M	R
*21.	Containment Area Radiation - High Range	(a)	(a)
*22.	Main Steam Line Area Radiation	(a)	(a)
23.	Condenser Air Ejector Noble Gas Monitor - Wide Range	M	R
24.	Purge/Vent Stack Noble Gas Monitor - Wide Range	M	R
25.	Cold Leg HPSI Flow	M	R
26.	Hot Leg HPSI Flow	M	R
27.	Reactor Vessel Coolant Level Monitor	M	R

(a) In accordance with Table 4.3-3.
*NUREG 0737 item to be operational by January 1, 1982.

3.0.2 Noncompliance with a specification shall exist when the requirements of the Limiting Condition for Operation and/or associated ACTION requirements are not met within the specified time intervals. If the Limiting Condition for Operation is restored prior to expiration of the specified time intervals, completion of the ACTION requirements is not required.

3.0.3 When a Limiting Condition for Operation is not met, except as provided in the associated ACTION requirements, within one hour, action shall be initiated to place the unit in a MODE in which the specification does not apply by placing it, as applicable, in:

1. at least HOT STANDBY within the next 6 h,

2. at least HOT SHUTDOWN within the following 6 h, and

3. at least COLD SHUTDOWN within the subsequent 24 h.

Where corrective measures are completed that permit operation under the ACTION requirements, the ACTION may be taken in accordance with the specified time limits as measured from the time of failure to meet the Limiting Condition for Operation. Exceptions to these requirements are stated in the individual specifications.

This specification is not applicable in MODE 5 or 6.

3.0.4 Entry into an OPERATIONAL MODE or other specified condition shall not be made unless the conditions of the Limiting Condition for Operation are met without reliance on provisions contained in the ACTION requirements. This provision shall not prevent passage through or to OPERATIONAL MODES as required to comply with ACTION requirements. Exceptions to these requirements are stated in the individual Specifications.

NUREG/CR-2627
ORNL/TM-8268
Dist. Category AN/XA

INTERNAL DISTRIBUTION

1-7. J. L. Anderson
8-9. R. L. Anderson
10. J. E. Hardy
11-15. A. L. Lotts
16-17. G. N. Miller
18. C. A. Mossman
19. F. R. Mynatt
20. L. C. Oakes
21. R. S. Stone
22. D. G. Thomas
23. ORNL Patent Section
24. Central Research Library
25. Document Reference Section
26-27. Laboratory Records Department
28. Laboratory Records (RC)

EXTERNAL DISTRIBUTION

U. S. NRC Office of Nuclear Reactor Regulation:

29-49. Core Performance Branch
50. Instrumentation & Control Systems Branch
51. Human Factors Engineering Branch
52. Procedures and Test Review Branch
53. Reactor Systems Branch
54. Director, Division of Systems Integration (DSI)
55. Director, Division of Human Factors Safety
56. Director, Division of Safety Technology
57. Asst. Director, Core and Plant Systems, DSI
58. Asst. Director, Reactor Safety, DSI
59. Sybil Boyd, Program Assistant, DSI
60. A. L. M. Hon, NRC/RES/AE
61. Warren Lyon, NRC/RES
62. D. Ross, NRC/RES
63. E. C. Wenzinger, NRC/RES
64. Asst. Manager for Energy Research and Development, DOE-ORO
65-66. Technical Information Center
67-69. Division of Technical Information and Control, NRC
70-200. Given distribution as shown in categories AN/XA

NRC FORM 335 (7-77)

U.S. NUCLEAR REGULATORY COMMISSION

BIBLIOGRAPHIC DATA SHEET

1. REPORT NUMBER (Assigned by DDC)
NUREG/CR-2627
ORNL/TM-8268

4. TITLE AND SUBTITLE (Add Volume No., if appropriate)
Inadequate Core Cooling Instrumentation Using Heated Junction Thermocouples for Reactor Vessel Level Measurement

2. (Leave blank)

3. RECIPIENT'S ACCESSION NO.

7. AUTHOR(S)
R. L. Anderson, J. L. Anderson, G. N. Miller

5. DATE REPORT COMPLETED
MONTH March YEAR 1982

9. PERFORMING ORGANIZATION NAME AND MAILING ADDRESS (Include Zip Code)
Oak Ridge National Laboratory
P. O. Box X
Oak Ridge, TN 37830

DATE REPORT ISSUED
MONTH March YEAR 1982

6. (Leave blank)

8. (Leave blank)

12. SPONSORING ORGANIZATION NAME AND MAILING ADDRESS (Include Zip Code)
Division of Systems Integration
Office of Nuclear Reactor Regulation
U. S. Nuclear Regulatory Commission
Washington, D. C. 20555

10. PROJECT/TASK/WORK UNIT NO.

11. CONTRACT NO.
FIN B0746

13. TYPE OF REPORT
Technical Evaluation Report

PERIOD COVERED (Inclusive dates)

15. SUPPLEMENTARY NOTES

14. (Leave blank)

16. ABSTRACT (200 words or less)

This document, entitled "Inadequate Core Cooling Instrumentation Using Heated Junction Thermocouples for Reactor Vessel Level Measurement," presents a technical review of the inadequate core cooling instrumentation with a Reactor Vessel Level Monitoring System using Heated Junction Thermocouples proposed by Combustion Engineering, Inc., for pressurized water reactors.

Emphasis was placed on evaluation of the generic Inadequate Core Cooling (ICC) Instrumentation System as a whole which includes, besides the heated junction thermocouple reactor vessel level measurement, the saturation margin monitor, the core exit thermocouples, the qualified safety parameter display system, and the critical functions monitor system.

17. KEY WORDS AND DOCUMENT ANALYSIS

17a. DESCRIPTORS

17b. IDENTIFIERS/OPEN-ENDED TERMS

18. AVAILABILITY STATEMENT
Unlimited

19. SECURITY CLASS (This report)
Unclassified

20. SECURITY CLASS (This page)
Unclassified

21. NO. OF PAGES

22. PRICE
$

NRC FORM 335 (7-77)

☆ U.S. GOVERNMENT PRINTING OFFICE: 1982-361-297:2020