MARTIN MARIETTA ENERGY SYSTEMS LIBRARIES

3 4456 0285348 2

ORNL/TM-2679/R1

ornl

OAK RIDGE NATIONAL LABORATORY

UNION CARBIDE

Operating Manual for the Bulk Shielding Reactor

OAK RIDGE NATIONAL LABORATORY
CENTRAL RESEARCH LIBRARY
CIRCULATION SECTION
4500N ROOM 175
LIBRARY LOAN COPY
DO NOT TRANSFER TO ANOTHER PERSON
If you wish someone else to see this report, send in name with report and the library will arrange a loan.

OPERATED BY
UNION CARBIDE CORPORATION
FOR THE UNITED STATES
DEPARTMENT OF ENERGY

ORNL/TM-2676/R1

Contract No. W-7405-eng-26

Operations Division

OPERATING MANUAL FOR THE BULK SHIELDING REACTOR

Compiled by

Bulk Shielding Reactor Staff

Date Published - April 1983

NOTICE: This document contains information of a preliminary nature. It is subject to revision or correction and therefore does not represent a final report.

OAK RIDGE NATIONAL LABORATORY
Oak Ridge, Tennessee 37830
operated by
UNION CARBIDE CORPORATION
for the
DEPARTMENT OF ENERGY

MARTIN MARIETTA ENERGY SYSTEMS LIBRARIES

3 4456 0285348 2

ORNL/TM-2676/R1

Operations Division
Reactor Operations Section

Contract No. W-7405-eng-26

OPERATING MANUAL FOR THE BULK SHIELDING REACTOR

Compiled by

Bulk Shielding Reactor Staff

NOTICE: This document contains information of a preliminary nature. It is subject to revision or correction and therefore does not represent a final report.

Approved by:

B. L. Corbett Reactor Supervisor	R. V. McCord, Head Reactor Operations Section	C. D. Cagle Technical Section

CONTENTS

Page

1. INTRODUCTION 1-1
2. REACTOR OPERATIONS 2-1
   2.1 Startup 2-1
      2.1.1 Responsibility 2-1
      2.1.2 Personnel hazards during startup 2-2
      2.1.3 Mode of operation 2-2
      2.1.4 General requirements - personnel and instrumentation 2-5
      2.1.5 Requirements and procedures for startup in Mode 1 2-7
      2.1.6 Requirements and procedures for startup in Mode 2 2-25
      2.1.7 Startup following a shutdown due to the dropping of one or more shim rods 2-41
      2.1.8 Return to full power following an electrical power outage 2-43
      2.1.9 Priorities in restarting the ORR and/or BSR 2-44
      2.1.10 Priorities in making operational decisions 2-46
   2.2 Steady-State Operations 2-47
      2.2.1 Requirements for continuous power operations 2-47
      2.2.2 Heat-power calculations 2-52
      2.2.3 Shim-rod positions 2-55
      2.2.4 Remote control of the BSR - operating procedures 2-55
   2.3 Shutdowns 2-62
      2.3.1 Shutting down the reactor 2-62
      2.3.2 Refueling shutdowns 2-64

Page

2.3.3 Unscheduled shutdowns 2-64
2.3.4 Radiation control measures during shutdowns 2-64
2.3.5 Reporting shutdowns 2-65
2.4 Annunciator Procedures 2-66
2.4.1 Introduction 2-66
2.4.2 Description 2-66
2.4.3 Operator response 2-68
2.4.4 Annunciators - parameters, setpoints, and suggested actions 2-68
3. INSTRUMENTATION AND CONTROLS 3-1
3.1 Reactor Controls and Safety Systems 3-1
3.1.1 Introduction 3-1
3.1.2 Nuclear-monitoring channels 3-1
3.1.3 The safety system 3-1
3.1.4 The control (or protective) system 3-4
3.2 Process Instrumentation 3-10
3.2.1 Introduction 3-10
3.2.2 Primary-water-system instrumentation 3-10
3.2.3 Secondary-water-system instrumentation 3-17
3.2.4 Building-ventilation system 3-20
3.2.5 Normal off-gas system 3-20
3.3 The Local Console 3-21
3.3.1 Left-hand side of console 3-21
3.3.2 Right-hand side of console 3-23
3.4 The Remote Console 3-30
3.4.1 Left-hand side of panel 3-30
3.4.2 Upper right-hand side of panel 3-32
3.5 Radiation and Contamintion Monitors 3-37
3.5.1 The facility radiation and contamination alarm system (FRCAS) 3-37

Page

3.5.2 Miscellaneous radiation monitors 3-40

3.5.3 Procedure for checking the systems by Operations personnel 3-41

3.6 Nuclear and Process Instrumentation - Checkout Procedures 3-50

4. REACTOR COMPONENTS AND REACTIVITY CONTROL 4-1

4.1 Introduction 4-1

4.2 General Precautions 4-2

4.3 Fuel Units 4-3

4.3.1 References 4-3

4.3.2 Description 4-3

4.3.3 Fuel storage - general requirements 4-7

4.3.4 Shipping fuel elements from the BSR pool 4-9

4.4 Control Rods and Drives 4-10

4.4.1 References 4-10

4.4.2 Description 4-11

4.5 Core Loadings 4-17

4.5.1 Introduction 4-17

4.5.2 Reactivity worth of the control rods 4-17

4.5.3 Refueling procedures 4-17

4.5.4 Approach-to-critical procedure 4-29

4.6 Core Work - Specific Procedures 4-35

4.6.1 Requirements for fuel handling 4-35

4.6.2 Procedure for transferring fuel elements 4-37

4.6.3 Procedure for transferring a shim-rod assembly 4-40

4.6.4 Procedure for working a shim-rod-drive unit 4-42

4.6.5 Procedure for working a shim-rod assembly 4-44

4.6.6 Inspection of shim-rod drive, shim rod, guide tube, and seat switch assemblies 4-47

Page

4.7 Moving the Reactor Assembly 4-53
4.7.1 Requirements 4-53
4.7.2 Operational procedures 4-53
4.8 Fuel Accountability 4-56
4.8.1 Introduction 4-56
4.8.2 Responsibility and procedure for maintaining records 4-60
4.8.3 Procedure for calculating consumption of uranium 4-66
5. EXPERIMENTS 5-1
5.1 Introduction 5-1
5.2 Experiment Facilities 5-2
5.2.1 Thermal-neutron-irradiation facility (East D_2O tank) 5-2
5.2.2 West D_2O tank 5-10
5.2.3 Liquid-helium cryostat 5-13
5.2.4 North-face facility 5-19
5.2.5 Core-position-15 facility 5-21
5.2.6 Modified CP-15 facility 5-23
5.2.7 Miscellaneous facilities 5-26
5.3 Experiment Instrumentation 5-27
5.4 Experiment-to-Reactor Switches (The E-Panel) 5-28
5.4.1 Modes of E-switches 5-28
5.4.2 Experiment alarm 5-30
5.4.3 Experiment setback or reverse 5-30
5.4.4 Experiment scram 5-31
5.5 General Rules for Review and Approval Procedure for Experiments 5-32
5.5.1 Introduction 5-32
5.5.2 General criteria 5-33

Page

5.6 Review, Approval, and Irradiation of Repeat Experiments 5-35
5.6.1 Review and approval of repeat experiments 5-35
5.6.2 Irradiation of repeat experiments 5-38
5.6.3 Reporting experiment activities and/or trouble 5-38
5.7 Review, Approval, and Irradiation of Near-Repeat Experiments 5-39
5.7.1 Review and approval of near-repeat experiments 5-39
5.7.2 Irradiation of near-repeat experiments 5-41
5.8 Review, Approval, and Irradiation of New Experiments . . 5-41
5.8.1 Review and approval of new experiments 5-41
5.9 Changes in Operating Experiments 5-42
5.10 Irradiation of Targets or Samples 5-44
5.10.1 Sample scheduling and records 5-44
5.10.2 Sample handling 5-49
6. REACTOR COOLING SYSTEMS 6-1
6.1 The Primary-Water Cooling System 6-1
6.1.1 References 6-1
6.1.2 Introduction 6-2
6.1.3 Description 6-2
6.1.4 General precautions 6-8
6.1.5 Operational procedures 6-9
6.1.6 Cooling system startup checks for Mode-1 operation 6-12
6.1.7 Cooling system startup checks for Mode-2 operation 6-15
6.1.8 Filling and draining the pool and primary water lines 6-17
6.1.9 Operation of skimmer and nitrogen-16 jets 6-21
6.1.10 Demineralizer units (primary and auxiliary) - description and procedures 6-22

Page

6.1.11 Filtering beds - description and procedures . . . 6-56
6.1.12 Routine checks 6-58
6.2 The Secondary-Water Cooling System 6-59
6.2.1 References 6-59
6.2.2 Introduction 6-59
6.2.3 Description 6-60
6.2.4 General precautions 6-61
6.2.5 Operational procedures 6-61
6.2.6 Chemical conditioning of the tower water 6-65
6.2.7 Chemical hazards 6-76
6.2.8 Filling and draining the tower basin and secondary system 6-80
6.2.9 De-icing the cooling towers 6-81
6.2.10 Routine checks 6-83
6.3 The Cooling Tower 6-83
6.3.1 Description of tower components 6-83
6.3.2 Preventive maintenance 6-88
7. WASTE DISPOSAL SYSTEM 7-1
7.1 Liquid-Waste Disposal 7-1
7.1.1 References 7-1
7.1.2 Introduction 7-1
7.1.3 Description 7-2
7.1.4 Operational procedures 7-4
7.2 Gaseous Waste Disposal 7-5
7.2.1 References 7-5
7.2.2 Introduction 7-5
7.2.3 Normal off-gas system (NOG) 7-5
7.2.4 The cell-ventilation system (CV) 7-11
7.3 Solid Waste Disposal 7-25
7.3.1 Introduction 7-25
7.3.2 Responsibilities 7-26

Page

8. UTILITIES 8-1
8.1 Potable Water 8-1
8.1.1 References 8-1
8.1.2 Introduction 8-1
8.1.3 Description 8-1
8.1.4 Operational procedures 8-3
8.2 Process Water 8-4
8.2.1 References 8-4
8.2.2 Introduction 8-4
8.2.3 Description 8-4
8.2.4 Operational procedures 8-5
8.3 Demineralized Water 8-6
8.3.1 References 8-6
8.3.2 Introduction 8-6
8.3.3 Description 8-6
8.3.4 Operational procedures 8-6
8.4 Compressed Air. 8-7
8.4.1 References 8-7
8.4.2 Introduction 8-7
8.4.3 Description 8-7
8.4.4 Operational procedures 8-9
8.5 Steam 8-10
8.5.1 References 8-10
8.5.2 Introduction 8-10
8.5.3 Description 8-10
8.5.4 Operational procedures 8-12
8.6 Electrical System 8-13
8.6.1 References 8-13
8.6.2 Normal electrical power 8-13
8.6.3 Emergency electrical power 8-15
8.7 Communication Systems 8-16
8.7.1 References 8-16
8.7.2 Introduction 8-16

Page

8.7.3 Description 8-16

8.8 Liquid Nitrogen 8-19

9. SAFETY PROCEDURES 9-1

9.1. General Safety Requirements 9-1

9.1.1 References 9-1

9.1.2 Introduction 9-1

9.1.3 Requirements for work around the reactor pool . . 9-1

9.1.4 Requirements for handling chemicals 9-2

9.1.5 Securing systems with locks and tags 9-3

9.1.6 Requirements concerning the use of mercury . . . 9-10

9.1.7 Location of safety equipment 9-10

9.1.8 Miscellaneous requirements 9-11

9.2 Radiation Safety and Control 9-15

9.2.1 References 9-15

9.2.2 Introduction 9-15

9.2.3 Responsibilities 9-16

9.2.4 Exposure limits 9-17

9.2.5 Zoning requirements 9-20

9.2.6 Requirements for shipping irradiated materials 9-24

9.2.7 Radiation surveys 9-25

9.2.8 Radiation and contamination monitors 9-28

9.2.9 Analysis of reactor primary water 9-28

9.3 Work Permits 9-30

9.3.1 Introduction 9-30

9.3.2 Radiation work permits 9-30

9.3.3 Hazards work permit 9-33

10 EMERGENCY PROCEDURES 10-1

10.1 Emergency Ventilation and Building Containment 10-1

10.1.1 References 10-1

10.1.2 Introduction 10-2

10.1.3 Description 10-2

10.1.4 Controls for building containment 10-2

10.1.5 Normal operations - procedures 10-5

Page

10.2 Emergency Electrical Power 10-7
10.2.1 References 10-7
10.2.2 Introduction 10-8
10.2.3 Description 10-9
10.2.4 Operational procedures 10-11
10.2.5 Reliability checks 10-12
10.3 Emergency Shielding for the Reactor Pool 10-17
10.3.1 Introduction 10-17
10.3.2 Operational procedures 10-17
10.4 Emergency Cooling 10-18
10.5 Emergency Services 10-18
10.5.1 Introduction 10-18
10.5.2 Fire Department 10-19
10.5.3 Guard Department 10-20
10.5.4 Industrial Safety and Applied Health Physics . . 10-20
10.5.5 Dispensary 10-21
10.5.6 Maintenance 10-21
10.5.7 Accidents 10-22
10.6 Evacuation Procedures 10-22
10.6.1 Emergency personnel 10-22
10.6.2 Responsibilities of emergency personnel 10-24
10.6.3 Laboratory emergency signals 10-26
10.6.4 Laboratory evacuation (emergency outside the reactor area) 10-26
10.6.5 Local area evacuation (emergency outside the section area) 10-28
10.6.6 Building evacuation - emergency in Building 3001 10-31
10.6.7 Building evacuation - emergency in Buildings 3004 and 3005 10-36
10.6.8 Building evacuation - emergency in Building 3010 10-37

Page

10.6.9 Building evacuation - emergency in Building 3042 10-42
10.6.10 Response to air attack warnings 10-48
10.6.11 Evacuation procedure drills 10-49
10.6.12 Maintenance policy for building evacuation equipment 10-49

11. AUXILIARY EQUIPMENT 11-1
11.1 Reactor-Bay Crane 11-1
11.1.1 Introduction 11-1
11.1.2 Description 11-1
11.1.3 Responsibility 11-1
11.1.4 Operational procedures 11-2
11.2 Scintillation Counter 11-3
11.2.1 Introduction 11-3
11.2.2 Precautions 11-4
11.2.3 Voltage adjustments 11-4
11.2.4 Calibration 11-5
11.2.5 Sample preparation 11-6
11.2.6 Counting 11-7
11.3 The Leeds & Northrup Meter 11-7
11.3.1 Introduction 11-7
11.3.2 Controls 11-7
11.3.3 Operational procedures 11-9
11.3.4 Pope-Model 1500 pH/Ion Meter 11-9
11.4 Underwater Periscope 11-10
11.4.1 Introduction 11-10
11.4.2 Description 11-10
11.4.3 Assembly procedures 11-15
11.4.4 Procedure for transferring the periscope to the pool 11-16
11.4.5 Focusing procedures 11-17
11.4.6 Procedures for disassembling the periscope . . . 11-18

Page

11.5 Mobile Catewalk Bridge 11-19
11.5.1 Introduction 11-19
11.5.2 Description 11-19
11.5.3 Mobile catwalk bridge operating instructions 11-20
11.6 BSR Acid Storage Tank 11-23
11.6.1 Introduction 11-23
11.6.2 Description 11-23
11.6.3 Procedure 11-23
12. RECORDS AND DATA ACCUMULATION 12-1
12.1 Introduction 12-1
12.2 Daily Report Form 12-1
12.2.1 BSR hourly readings 12-1
12.2.2 BSR power changes and accumulated power 12-3
12.2.3 BSR shift check sheets 12-3
12.2.4 BSR daily summary 12-3
12.2.5 BSR log book 12-10
12.3 Miscellaneous Report Forms 12-11
12.3.1 BSR weekly report 12-11
12.3.2 BSR quarterly report 12-11
12.3.3 BSR startup checklist 12-11
12.3.4 BSR shutdown checklist 12-20
13. SPECIAL PROCEDURES 13-1
13.1 Pertaining to BSR Complex 13-1
13.1.1 Authorization and documentation of changes to the system, operating manual, and/or operating instruction notebook 13-1
14. INSTRUCTION CHECKLIST FOR THE BSR 14-1
14.1 Introduction 14-1

Page

15. MAINTENANCE MANAGEMENT AT THE BSR. 15-1

15.1 Introduction 15-1

15.2 Mechanical and Electrical Maintenance 15-3

15.2.1 Scheduling 15-3

15.2.2 Procedures 15-5

15.2.3 Documentation 15-6

15.2.4 Control 15-7

15.2.5 Auditing 15-9

15.3 Electronic and Process Instrumentation 15-9

15.3.1 Category I - minimum control and safety instrumentation required for startup and continuity of operation 15-10

15.3.2 Category II - other instrumentation not falling into Category I 15-10

15.4 Inspection of Specialized Equipment 15-11

15.5 Operational Maintenance Activities 15-12

15.5.1 Operability tests 15-14

15.5.2 Spare parts stock 15-14

15.5.3 Auditing of maintenance by Operations 15-15

15.5.4 Auditing by independent committees 15-16

15.6 Records 15-16

EXAMPLES

		Page
3.1.	Facility Radiation and Contamination System Checkout Procedure	3-43
4.1.	BSR Replacement Loadings (UCN-2274)	4-28
4.2.	BSR Check Sheet for Inspection of Shim-Rod Drive, Shim Rod, Guide Tube, and Seat Switch Assemblies	4-48
4.3.	BSR Fuel Record Card (UCN-7453)	4-58
4.4.	BSR Core (UCN-8504)	4-59
4.5.	Transfer Memo (UCN-1909A)	4-61
4.6.	Monthly Inventory Work Sheet (UCN-2676)	4-62
4.7.	Consolidated Monthly Inventory (UCN-3683)	4-63
4.8.	ORNL Nuclear Materials Intra-Laboratory Transfer (UCN-2681)	4-65
4.9.	Fuel Burnup Sheet (UCN-14741)	4-68
5.1.	Experiment Information Form (UCN-4404)	5-36
5.2.	Experiment Status Change Request (UCN-2166)	5-43
5.3.	Request for Irradiation Form (UCN-12181)	5-45
5.4.	Sample Schedule Sheet (UCN-6894)	5-47
6.1.	Procedural Checklist for Regenerating the BSR Primary Demineralizer	6-25
6.2.	Procedure for Regenerating the Auxiliary Demineralizer	6-50
6.3.	BSR Cooling Tower Inspection (UCN-5595)	6-89
7.1.	BSR Containment System Quarterly Functional Checks	7-21
7.2.	Burial Authorization for Radioactive-Contaminated Solid Waste (UCN-2822)	7-27
9.1.	Radiation Hazard - Material Transfer Tag (UCN-2785)	9-26
9.2.	BSR Area Radiation Survey (UCN-9145)	9-27
9.3.	Radiation Work Permit (UCN-2779)	9-31
9.4.	Hazards Work Permit (UCN-3694A)	9-34

		Page
10.1	BSR Emergency Electrical Power Quarterly Test	10-14
12.1	BSR Hourly Readings (UCN-8152)	12-2
12.2	BSR Power Changes and Accumulated kWh (UCN-7973)	12-4
12.3	BSR Shift Check Sheet	12-5
12.4	BSR Shift Check Sheet	12-6
12.5	BSR Shift Check Sheet	12-8
12.6	BSR Daily Summary (UCN-7974)	12-9
12.7	BSR Weekly Report (UCN-7280)	12-12
12.8	BSR Startup Checklist (UCN-8909)	12-16
12.9	BSR Shutdown Checklist (UCN-8908)	12-21
13.1	Operating Instructions (UCN-455)	13-2
13.2	Mechanical Design Change Memo	13-4
13.3	Reactor Instrument and Controls Design Change Memo	13-5
14.1	Instruction Checklist for the Bulk Shielding Reactor	14-2
14.2	BSR Shift Check Sheet	14-28
14.3	BSR Shift Check Sheet	14-29
14.4	BSR Shift Check Sheet	14-31
14.5	BSR Area Radiation Survey	14-32
15.1	Plant & Equipment Work Request	15-13

FIGURES

Figure		Page
2.1.	Isometric drawing of the in-pool portion of the forced convection cooling system for Mode-2 operation	2-3
2.2.	Restricted isometric view of the BSR showing the flow path for natural-convection cooling during Mode-1 operation	2-4
2.3.	BSR remote annunciator panels	2-57
2.4.	Annunciator right panel (local)	2-69
2.5.	Annunciator left panel (local)	2-76
2.6.	Location of seven remote scram switches on 1st floor of BSF, Building 3010	2-81
2.7.	Annunciator center panel (local)	2-86
3.1.	Magnet control instrumentation	3-3
3.2.	BSR local control	3-22
3.3.	Indicator-light and/or switch panel on right side of console	3-24
3.4.	Indicator-light and/or switch panel on right side of console	3-24
3.5.	Indicator-light and/or switch panel on right side of console	3-25
3.6.	Indicator-light and/or switch panel on right side of console	3-25
3.7.	Indicator-light and/or switch panel on right side of console	3-26
3.8.	Indicator-light and/or switch panel on right side of console	3-26
3.9.	Indicator-light and/or switch panel on right side of console	3-27
3.10.	Indicator-light and/or switch panel on right side of console	3-27
3.11.	Scram reset	3-28

Page

3.12. Power range selector switch 3-29
3.13. BSR remote control console 3-31
4.1. Standard BSR fuel element 4-4
4.2. Special fuel element for control rod 4-6
4.3. Fuel storage rack 4-8
4.4. BSR control rod with shock absorber, shim-rod extension, and armature 4-12
4.5. BSR-PCA control drive mechanism 4-13
4.6. Shock absorber, shim-rod extension, and magnet armature (shown prior to assembly) 4-14
4.7. Electromagnet for BSR-PCA shim rod 4-15
4.8. No. 1 shim-rod calibration 4-18
4.9. No. 2 shim-rod calibration 4-19
4.10. No. 3 shim-rod calibration 4-20
4.11. No. 4 shim-rod calibration 4-21
4.12. No. 5 shim-rod calibration 4-22
4.13. No. 6 shim-rod calibration 4-23
4.14. Differential and integral worths of shim-rods 1 through 6 4-24
4.15. Integral worth of rods 1 through 4 4-25
4.16. Integral worth of rods 5 and 6 4-26
4.17. Top of fuel-handling tool 4-38
4.18. Bottom of fuel-handling tool 4-39
4.19. Isometric drawing of the BSR 4-54
4.20. BSR core configuration board 4-57
5.1. Thermal neutron irradiation facility 5-3
5.2. Thermal neutron irradiation facility 5-4
5.3. BSR D_2O off-gas system 5-9
5.4. The liquid helium cryostat 5-15
5.5. North face irradiation facility 5-20

		Page
5.6.	Modified CP-15 facility	5-24
5.7.	E-panel switches	5-29
6.1.	2 MW BSR cooling water system flow sheet	6-3
6.2.	Isometric drawing of the BSR	6-4
6.3.	Restricted isometric view of the BSR showing the flow path for natural-convection cooling during Mode-1 operation	6-5
6.4.	Reactor primary pump packing gland cooling water supply	6-10
6.5.	Schematic flow diagram of primary demineralizer	6-48
6.6.	Reactor inlet water temperature controller	6-63
6.7.	BSR secondary pH control probes	6-71
7.1.	Liquid wastes services	7-3
7.2.	Gaseous waste disposal system	7-7
7.3.	Flow diagrams of gaseous waste disposal systems in the stack area	7-8
7.4.	Building ventilation filters	7-19
8.1.	Potable, process, and demineralized water	8-2
8.2.	Compressed air services	8-8
8.3.	Steam services	8-11
8.4.	Electrical one-line diagram	8-14
9.1.	Location of seven remote scram switches on first floor of BSF, Building 3010	9-13
9.2.	Fire protection system	9-14
9.3.	Location of monitrons and continuous air monitors in BSF, Building 3010	9-15
10.1	Controls for building containment	10-3
10.2	Emergency power distribution	10-9
11.1	Underwater periscope	11-11
11.2	Objectives	11-12
11.3	Tools	11-13
11.4	BSR acid storage tank	11-27
15.1	Line of maintenance responsibility	15-2

TABLES

		Page
3.1.	Instrument channels, details	3-2
3.2.	Temperature instrumentation for miscellaneous items	3-15
3.3.	Pool water temperature instrumentation	3-16
3.4.	Fan speed control	3-18
4.1.	Selected reference dimensions for standard BSR fuel elements	4-5
5.1.	Distance from the bottom of the East D_2O tank sample tubes to the reactor horizontal centerline	5-5
5.2.	Neutron-flux and gamma data measured in certain BSR irradiation facilities at 2 MW	5-6
6.1.	Fan speed control	6-64
9.1.	Valves in the BSR area that should either be tagged or locked in their normal positions	9-5
9.2.	Maximum permissible dose (MPD) in rems	9-18
9.3.	Weekly maximum exposure limit recommendations	9-18
9.4.	Approval required for exposure to high dose rates	9-19
9.5.	Regulations for posting and establishing radiation zones	9-21
9.6.	Shipping requirements, radioactive materials	9-25
11.1	Procedure for transferring acid to the storage tank	11-24
15.1	List of maintenance records - BSR	15-17

ABSTRACT

The BSR is a pool-type reactor. It has the capabilities of continuous operation at a power level of 2 MW or at any desired lower power level. This manual presents descriptive and operational information. The reactor and its auxillary facilities are described from physical and operational viewpoints. Detailed operating procedures are included which are applicable from source-level startup to full-power operation. Also included are procedures relative to the safety of personnel and equipment in the areas of experiments, radiation and contamination control, emergency actions, and general safety.

This manual supercedes all previous operating manuals for the BSR.

1. INTRODUCTION

Reactors and their operation may be potentially more hazardous than many industrial enterprises. Generally, this is due to the ever-present possibility of sudden, large power increases in the reactor itself and the inability of human senses to detect the radiation resulting from such an excursion. The possibility of contamination of a large area, as well as local contamination, is an added hazard that might result from such an excursion.

To minimize the inherent hazards associated with operating a reactor, in addition to those common to any industrial plant, detailed procedures have been established to serve as guides in the various phases of reactor operations. These procedures are to be followed whenever applicable. In cases where the operation is more complex or where errors cannot be tolerated, the use of checklists will be incorporated in that particular procedure.

Because revision and additions are expected frequently, copies of the manual were printed in loose-leaf form. These copies, which are easily revised, are distributed throughout the Reactor Operations Section. One copy remains in the BSR control room for use by the shift personnel (a copy is also maintained in the ORR control room).

Procedure changes or additions must be formally written and approved by senior staff members as detailed in Section 13.1. A copy of each change or addition is then placed in each loose-leaf manual, thus ensuring that up-to-date procedures are always on hand.

This procedure manual shall be reviewed (and updated as necesary) once every two years as specified in the "Operations Division Procedures." The Assistant Reactor Supervisor shall be responsible for the review with help from appopriate staff members.

Each biennial review shall be documented by issuing a one-page revision to the manual to be inserted as page iv(a) immediately preceding the table of contents, page v. The documentation shall include a statement that the manual has been reviewed and updated, shall give the date of the review, and shall be signed by the Reactor Supervisor as well as by the staff members who normally sign procedure revisions.

The core of the ORNL Bulk Shielding Reactor (BSR) consists of an assembly of MTR-type fuel elements. The core is located in a pool of water 40 ft long, 20 ft wide, and 22 ft deep. The water serves as the reactor coolant, moderator, shield, and reflector. The support structure for the core is attached to a movable bridge; this bridge is supported on steel rails located along the east and west walls of the pool. An additional movable bridge, called the instrument bridge, is used for a working platform and to provide space for special equipment. This bridge is supported by the same poolside rails used to support the reactor bridge.

A forced-flow cooling system allows continuous operation at a power level of 2 MW. In addition to the normal reactor control instrumentation, a closed-circuit television monitoring system is provided, with remote controls located at the ORR.

2. REACTOR OPERATIONS

2.1. Startup

2.1.1. Responsibility

The most hazardous time of reactor operation is during a startup. To avoid a situation in which some prestartup checks are neglected or abnormal conditions are not noted because of dual supervision, only one supervisor will be in charge during a startup. The supervisor in charge will assure himself that all checks have been made and that the reactor and experiments are ready for operation. He must direct the startup from the control room, giving instructions to personnel at other stations, as needed, via the intercommunication and/or public-address system. The supervisor in charge when the startup checks are made must follow through with the startup until the desired power level is attained.

The minimum required personnel for a normal reactor startup is a supervisor and a reactor operator. Occasionally, an instrument mechanic and/or instrument engineer is needed for standby service. Other personnel unnecessarily present are superfluous and may indeed prove to be distracting to the operating crew.

During each reactor startup, it shall be the responsibility of the supervisor in charge to evaluate the number of personnel required for the operation and to excuse interested bystanders from the control room to the observation post outside the control room window. There will be special occasions when extra personnel (i.e., trainees, committees) will necessarily be present. During such times, those observing should be instructed to avoid confusing and/or interfering with the operation.

2.1.2. Personnel hazards during startup

Although every effort is made to ensure the safety of all reactor facilities, the possibility of human error or equipment failure is always present; therefore, the consequences of radiation and contamination incidents should be well understood by Reactor Operations personnel. Since reactor startups, in general, are potentially hazardous, each should be approached with the same degree of caution. Any changes to reactor components, process systems, experiments, or other equipment should be given special consideration; and, whenever applicable, well-trained Health Physics personnel should be used for monitoring and checking radiation levels during startups.

2.1.3. Mode of operation

1. Mode 1. The reactor core is cooled by natural convection of the 130,000 gallons of pool water. A flapper-type valve (see Figs. 2.1 and 2.2) on the plenum at the lower section of the reactor grid is open in this mode of operation; when this valve is open, the flow path is as shown in Fig. 2.2 (with the flapper valve fully open, interlocks prevent starting the primary pump). The maximum steady-state power level is 1000 kW nominal. (Reactor operation in this mode is restricted, administratively, to those occasions when the forced-flow cooling system is not used.)
2. Mode 2. The reactor core is cooled by the forced-flow cooling system. The flapper valve is closed in this mode of operation; the flow path is as shown in Fig. 2.1. The maximum steady-state power level is 2000 kW nominal.

ORNL DWG. 67-5973

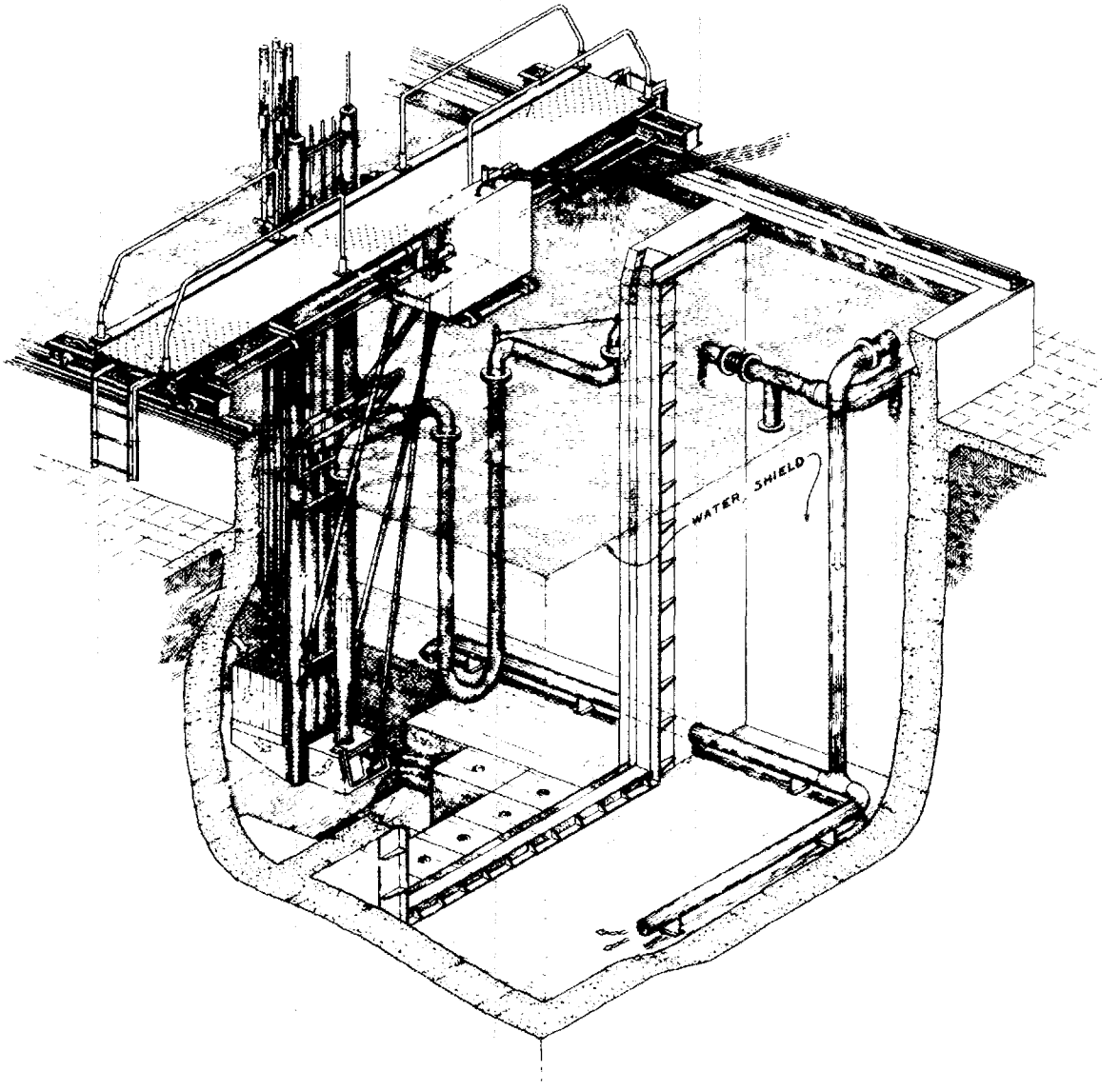

Fig. 2.1. Isometric drawing of the in-pool portion of the forced convection cooling system for Mode-2 operation.

ORNL DWG. 67-5975

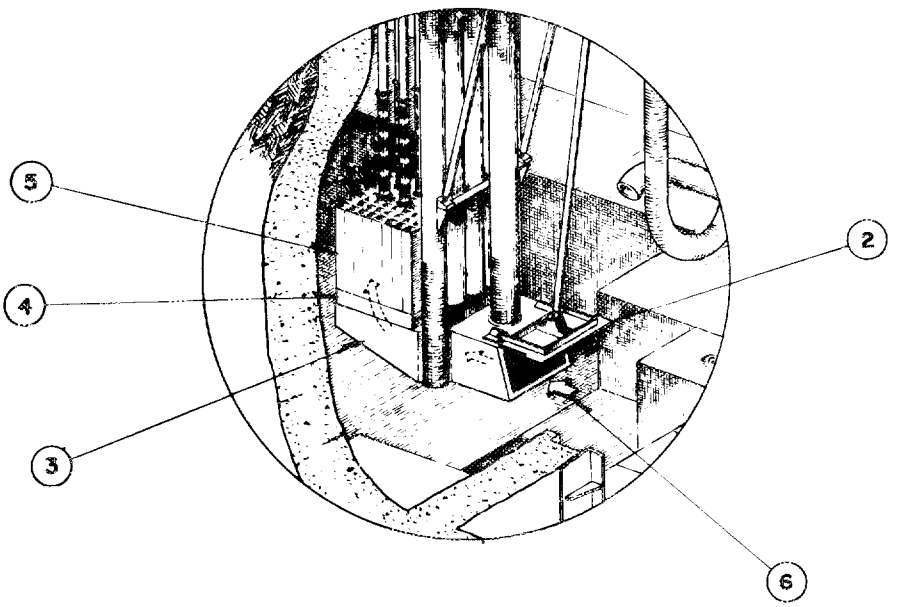

Fig. 2.2. Restricted isometric view of the BSR showing the flow path for natural-convection cooling during Mode-1 operation.

2.1.4. General requirements - personnel and instrumentation

1. Personnel. The supervisor in charge during a reactor startup should be assured of the proper operation of all auxiliary system instrumentation and nuclear instrumentation. He must initial each procedural item on the startup checklist as required. He must remain in the control room during the startup. After it is established that all monitoring channels are functioning properly and after the desired power level is attained, the supervisor may leave the control room.

   The operator on duty during the startup is responsible for assisting the supervisor in the performance of the startup checks. He will then perform the startup under direct supervision, manipulating the controls as necessary to attain the desired power level. If local operation is intended, the operator will remain in the control room until relieved.

   If remote operation is intended, the ORR console operator should be notified of the status of the reactor and the switch from local to remote operation should be accomplished according to the procedure specified in Section 2.2.4.2.

2. Instrumentation. Under normal conditions, the operation of the reactor is monitored by the following instrumentation connected to the reactor safety or protective circuits.

   a. Mode 1

      (1) Flapper-valve position indicator

(2) Three power-level safety channels

(3) One log-N channel (including period instrumentation)

(4) One fission chamber channel

(5) One servo channel

(6) Under normal conditions, the following additional instrumentation will be in operation:

(a) Three radiation monitors located in the containment volume

(b) Three continuous air monitors located in the containment volume

(c) One radiation monitor, located in the reactor room, which is capable of activating the building containment system when a selected radiation level, not to exceed 150 mr/h, occurs

b. Mode 2

(1) Flapper-valve position indicator

(2) Three power-level safety channels

(3) One log-N channel (including period instrumentation)

(4) One fission chamber channel

(5) One servo channel

(6) One ΔT channel

(7) One reactor primary-water flow channel

(8) One reactor ΔP channel

(9) Under normal conditions, the following additional instrumentation will be in operation:

(a) Three radiation monitors located in the containment volume

(b) Three continuous air monitors located in the containment volume

(c) One radiation monitor for reactor exit water

(d) One radiation monitor for decay-tank off-gas

(e) One radiation monitor, located in the reactor room, which is capable of activating the building containment system when a selected radiation level, not to exceed 150 mr/h, occurs.

2.1.5. Requirements and procedures for startup in Mode 1

1. Startup operation. Whether the reactor is subcritical or critical at zero power, at an intermediate level, or in the power range and it is desired to make the reactor critical or to increase the reactor power level, the minimum instrumentation shall be:

a. flapper-valve position indicator,

b. two level-safety channels,

c. one log-N period channel,

d. one neutron-level-detection channel (log-N or fission chamber) that is reliably detecting the neutron level in the reactor,

e. one radiation monitor located in the reactor room,

f. one continuous air monitor located in the reactor room,

g. one operating radiation-detection monitor which provides information on radioactivity in the

reactor cooling system, and

h. one instrument, located in the reactor room, which will actuate the building containment system upon detection of a selected radiation level not to exceed 150 mr/h.

It should be pointed out that the limitations are set forth as an absolute minimum. In all cases where practical, a maximum complement of instrumentation will be made available. The failure of a particular channel is not necessarily a crucial situation in itself if the minimum complement of instrumentation can be provided; however, repeated failures of a single channel or simultaneous failures of more than one channel would be cause for concern. Under such conditions, an evaluation should be made at the time. Operation of the reactor with minimum instrumentation requirements shall be preceded by authorization from the reactor supervisor or his designated representative. Should an occasion arise when the minimum instrumentation cannot be met, the reactor power must not be increased; and immediate action must be taken to obtain necessary repairs.

2. Preparation for startup in Mode 1

a. Check of the Reactor Area. The reactor area should be checked to ensure that this area is in a safe condition for reactor operation. (These checks should be made while completing Section A of the checklist.)

(1) Determine that the reactor loading and the reactor position in the pool is proper.

(2) Determine that all core pieces are in place and properly seated and that all experiment rigs are in their proper locations and secured.

(3) Ensure that the shim-rod drive units and the fission-chamber drive units are in their proper positions, that cable connections are installed on the proper shim-rod drives, and that these units are fastened to the hold-down arms.

(4) Determine that all core work has been completed and make a final inspection of the core for foreign objects and for any abnormalities.

(5) Determine that the reactor carriage, reactor bridge, and the instrument bridge are locked in position.

b. Check of Experiment Facilities. The experiment facilities should be checked to ensure that they are in a safe condition for reactor operation. (These checks should be made while completing Section B of the startup checklist.)

(1) Determine that all changes to experiments are completed.

(2) Determine that all experiment information sheets are current.

(3) Determine that Experiment Safety-Check Sheets

have been completed by instrument engineers for all applicable experiments.

(4) Determine that Special Instruction Sheets for all experiments are complete and current.

c. Startup of Water System. The water systems must be put into operation and checked for proper operation. (These checks should be made while completing Section C of the startup checklist.)

(1) Determine that the pool is filled to the proper level and that all pool-level alarms have been cleared.

(2) Determine that the flapper valve is in the fully open position (with the flapper valve fully open, interlocks prevent starting the primary pump).

(3) Determine that the jet-diffuser-system flow is, or has been, properly established if the reactor is to be operated above 100 kW.

(4) Determine that flow through the demineralizer is, or has been, properly established.

(5) Determine that the water purity is adequate.

(6) Determine that the skimmer system is in operation.

d. Instrumentation Checks. (These checks should be made while completing Section E of the startup checklist.)

(1) Determine that local operation has been selected.

(2) Determine that all utility services are in order as specified by the startup checklist.

(3) Determine that all recorders, amplifiers, etc., are turned on at least one-half hour prior to operation of the reactor.

(4) Determine that the ionization chambers are in their proper locations and at their proper elevations. (Check the log book for any movement during the preceding shutdown.)

(5) Determine that the fission-chamber channel is calibrated and operating properly.

   (a) Set the log count-rate meter on CALIBRATE and adjust until the log count-rate recorder indicates 60 counts/s. Return the log count-rate meter to USE.

   (b) Withdraw the fission chamber until the counting rate is observed to decrease. The count-rate period recorder should indicate a negative period. Then insert the fission chamber until the counting rate is observed to increase. The count-rate period recorder should indicate a positive period. Finally, withdraw the fission chamber to its withdraw limit.

(c) While comparing the counting rate of the channel to the posted calibration curve [for response to noise (alpha) only], vary the pulse height setting (PHS). Determine that the resulting response curve for the channel is essentially the same as that posted [i.e., that the noise (alpha) response has not shifted].

(d) While withdrawing one shim rod, insert or withdraw the fission chamber intermittently. Rod withdrawal should be inhibited as soon as the chamber is moved.

(e) While withdrawing one shim rod, vary the pulse height setting (PHS) to cause a period indication of <25 s. Rod withdrawal should stop.

(f) With one rod off seat, vary the PHS to cause a period indication of <7 s. A reverse should occur, inserting the rod.

(g) Set the PHS and the gain on the pulse amplifier at the posted startup value.

(h) Position the fission chamber to obtain a counting rate >20 but <40 counts/s.

(6) Determine that the log-N channel is adjusted properly.

(a) Determine that the log-N channel power-supply meters indicate that the positive voltage and negative voltage applied to the chamber are within ±10% of the posted values.

(b) Using the built-in "ground," "lo-calibrate," and "hi-calibrate" signals, calibrate the log-N amplifier with the log-N recorder using the "Gnd set," "calibrate," and "gain" potentiometers, respectively. Then return the amplifier switch to the "OPERATE" position.

(c) Determine that the chamber is connected to the log-N amplifier by depressing the negative voltage inhibit push button and observe an upscale reading on the log-N and log-N period recorders. Then turn the amplifier switch to the "GROUND" position.

(7) Determine that the servo channel is adjusted properly.

(a) Determine that the servo channel power-supply meters indicate that the positive voltage and negative voltage applied to the chamber are within ±10% of the posted values.

(b) Push the micromicroammeter "zero" button, set the "power range" selector switch* on 20 W, and zero the micromicroammeter.

(c) Set the power range switch on 20 kW and determine that the chamber is connected to the micromicroammeter by depressing the negative voltage inhibit push button and observing an upscale reading on the micromicroammeter. Return the range switch to its previous position.

(8) Check the control-rod magnet currents for gross deviations from a normal value of 0.5 A (should be 0.5 ± 0.1 A). (If the magnet current for any rod differs by more than ±0.1 A from the normal value, contact the reactor supervisor.)

(9) Calibrate the level-safety channels (quarterly).

(10) Perform the rod-drive and rod-response test following repositioning of, or any work on, the drive units (also performed quarterly).

---

*The micromicroammeter range setting defines the permissible reactor operating power range; therefore, the micromicroammeter range switch (or selector) is the "power range" switch (or selector).

(11) Perform the scram checks. (These checks involve raising all control rods about 1-in. and scramming them by the local manual button, remote manual scram switch, log-N amplifier period button, and each level-safety Jordan button, in turn. This section of the checklist is self-explanatory.) Reset all flux trip lights on the dual voltage comparators, and turn log-N to OPERATE.

(12) Perform the check of the magnet pulse test equipment.

(a) Raise all rods approximately 1-in.

(b) Depress, in turn, each "pulse test" push button on the three sigma bus converter modules and observe

(i) that there is a flash of each of two neon lamps on the sigma bus converter;

(ii) that the dual voltage comparator flux trip amber light comes on; and

(iii) that both shim rods associated with the magnet control under test remain withdrawn (no drops).

(13) Determine that the sigma bus monitor (meter) on each sigma bus converter module indicates in the green N_L band.

(14) Set the "power range" switch on the desired range. Then set the servo-demand thumbwheel for the desired fraction of that range.

(15) Determine that all air monitors and radiation monitors (monitrons) are operating properly.

(16) Determine that all instrument channels are working properly and the corresponding recorders are tracking.

(17) If the annunciator panels are not cleared, the reason for any alarm should be determined and evaluated.

e. Other checks (These checks should be made while completing Section F of the startup checklist.)

(1) Determine that the public-address system is operating properly.

(2) Review the schedule for operation, including power level changes and proposed run time.

(3) Announce the expected startup time over the public-address system if requested by experimenters.

(4) Determine that the core-loading chart is up-to-date and properly approved following any core changes.

(5) Determine that the containment system is in the condition required for reactor startup. (Refer to Sections 7.2.4 and 10.1 for the proper operating conditions of the containment system.)

(6) If the power level schedule indicates extended periods of high-power operation, the ventilating system for the pool area must be functioning properly.

3. Startup in Mode 1 via operator start*

a. Since all checks listed in Section 2.1.5(2) must have been satisfactorily completed, certain required conditions should exist; however, these conditions are restated below.

(1) Key switch S-1 in the ON position.

(2) Preferred-rod selector switch S-10 in the desired position; i.e., to select rod 1, 2, or 3.

(3) Raise-clutch mode switch S-3 in the RUN position.

(4) Individual "clutch actuate" switches S-12 through S-15 and S-22 through S-23 in the HOLD position.

(5) Remote scram switch S-11 in OPERATE and scrams reset by pushing the scram-reset button, PB-1. The local scram switch is a push button, PB-2.

(6) No reverse request exists.

---

*Operator start (manual control) may be used for special startups but is normally used only when the servo system is not functioning properly.

(7) Fission chamber positioned so that the output of the count-rate channel is >2 counts/s. (If it is desired to operate the fission chamber in the automatic mode, any repositioning will be accomplished automatically.)

(8) If the desired operating power level is <400 kW (20% N_F), omit step 9 below.

(9) If the desired operating power level is >400 kW (20% N_F), the "power range" switch must be on the 2-MW setting and the servo demand must be at its lower limit (5% N_F).

b. Move the "group-actuate" switch, S-4, to the WITHDRAW position and hold the switch in that position. If a 25-s period is detected by either the count-rate channel or the log-N channel, rod withdrawal is inhibited until the period becomes longer. (Until the log-N channel indicates a power level of 0.01% N_F and log-N confidence is obtained, additional conditions of the count-rate channel which inhibit rod withdrawal are: the count-rate meter not in OPERATE; the counting rate les than 2 counts/s or greater than 8000 counts/s; and the fission chamber in motion.)

c. During this stage, the proper "power range" switch setting must be selected (even though the servo

system is not on) or a reverse will be initiated. The switch should have been set for the desired operating range prior to the startup as required by the Startup Checklist. (The other alternative would require the operator to increase the range-switch setting as the power level increases; however, this distraction of the operator is undesirable when the reactor is under manual control.)

d. If the desired operating power level is >400 kW (20% N_F), "run" must be obtained. To obtain "run," the power level (as indicated by the log-N channel) must be >1.5% N_F and <10% N_F, the "power range" switch must be on the 2-MW setting, the log-N period must be >100 s, and the servo demand must be at its lower limit (5% N_F), even though the servo system is OFF. If these conditions exist, the run mode is automatically obtained.

e. When the desired power level is obtained, the positions of the shim rods should be adjusted so that rods 1 through 4 are evenly withdrawn. [Rods 5 and 6 should be evenly withdrawn to the last recorded position required (usually 23.00 in.) to make the heat power equal to the instrument power.] This operation is performed so that shim rods 5 and 6 and the neutron chambers are in approximately the same relationship; consequently, the shadowing effect from rods 5 and 6 will be about the same during power operation.

4. <u>Startup in Mode 1 via instrument start</u>

a. Since all checks listed in Section 2.1.5.2 must have been satisfactorily completed, certain

required conditions should exist; however, these conditions are restated below.

(1) Key switch S-1 in the ON position.

(2) Preferred-rod selector switch S-10 in the desired position, i.e., to select rod 1, 2, or 3.

(3) Raise-clutch mode switch S-3 in the RUN position.

(4) Individual "clutch actuate" switches S-12 through S-15 and S-22 through S-23 in the HOLD position.

(5) Remote scram switch S-11 in OPERATE and scrams reset by pushing the scram-reset button, PB-1. The local scram switch is a push button, PB-2.

(6) No reverse request exists.

(7) Fission chamber positioned so that the output of the count-rate channel is >20 counts/s but <40 counts/s; the fission chamber should be in the automatic mode, i.e., switch S-19 should be in the AUTO position.

(8) If the desired operating power level is <200 kW (10% N_F), omit step 9, below.

(9) If the desired operating power level is >200 kW (10% N_F), the "power range" switch must be on the 2-MW setting and the servo demand must be at its lower limit (5% N_F).

b. Turn the instrument-start switch to the ON position; this will initiate the startup sequence. The following events will occur as demanded by the status of the reactor system:

(1) The servo system will be activated.

(2) The rods will be withdrawn continuously. If a 25-s period is detected by either the count-rate channel or the log-N channel, rod withdrawal is inhibited until the period becomes longer. (Until the log-N channel indicates a power level of 0.01% N_F and log-N confidence is obtained, several additional conditions of the count-rate channel which inhibit rod withdrawal are: the count-rate meter not in OPERATE, the counting rate less than 2 counts/s or greater than 8000 counts/s, and the fission chamber in motion.)

c. When the servo system senses an "insert error," the instrument (controlled) startup will be terminated. The servo will maintain the reactor power level at the level demanded.

d. If the desired power level is >200 kW (10% N_F), "run" must be obtained. "Run" should be obtained as soon as the servo system stabilizes the reactor power at the 100-kW (5% N_F) level; i.e., the required conditions should naturally result from

servo system action. The servo demand may then be increased to the desired level by manipulating the demand setpoint.

e. When the desired power level is obtained, the positions of the shim rods should be adjusted so that rods 1 through 4 are evenly withdrawn. [Rods 5 and 6 should be evenly withdrawn to the last recorded position required (usually 23.00 in.) to make the heat power equal to the instrument power.] This operation is performed so that shim rods 5 and 6 and the neutron chambers are in approximately the same relationship; consequently, the shadowing effect from rods 5 and 6 will be about the same during power operation.

5. Startup in Mode 1 via operator start with servo

a. Since all checks listed in Section 2.1.5.2 must have been satisfactorily completed, certain required conditions should exist; however, these conditions are restated below.

(1) Key switch S-1 in the ON position.

(2) Preferred-rod selector switch S-10 in the desired position, i.e., to select rod 1, 2, or 3.

(3) Raise-clutch mode switch S-3 in the RUN position.

(4) Individual "clutch actuate" switches S-12

through S-15 and S-22 through S-23 in the HOLD position.

(5) Remote scram switch S-11 in OPERATE and scrams reset by pushing the scram-reset button, PB-1. The local scram switch is a push button, PB-2.

(6) No reverse request exists.

(7) Fission chamber positioned so that the output of the count-rate channel is >2 counts/s. (If it is desired to operate the fission chamber in the automatic mode, any repositioning will be accomplished automatically.)

(8) If the desired operating power level is not >200 kW (10% N_F), omit step 9, below.

(9) If the desired operating power level is >200 kW (10% N_F), the "power range" switch must be on the 2-MW setting and the servo demand must be at its lower limit (5% N_F).

b. Turn the servo switch, S-17, to the ON position and then return it to the HOLD position. The servo system will be energized unless the regulating rod is at either the upper or lower limit of the regulating-rod span.

c. Move the "group-actuate" switch, S-4, to the WITHDRAW position and hold the switch in that position. If a 25-s period is detected by either

the count-rate channel or the log-N channel, rod withdrawal is inhibited until the period becomes longer. (Until the log-N channel indicates a power level of 0.01% N_F and log-N confidence is obtained, several additional conditions of the count-rate channel which inhibit rod withdrawal are: the count-rate meter not in OPERATE; the counting rate less than 2 counts/s or greater than 8000 counts/s; and the fission chamber in motion.)

d. When the servo system senses an "insert error," the servo will maintain the reactor power level at the level demanded.

e. If the desired power level is >200 kW (10% N_F), "run" must be obtained. "Run" should be obtained as soon as the servo system stabilizes the reactor power at the 100-kW (5% N_F) level; i.e., the required conditions should naturally result from servo system action. The servo demand may then be increased to the desired level by manipulating the demand "enter setpoint" push button.

f. When the desired power level is obtained, the positions of the shim rods should be adjusted so that rods 1 through 4 are evenly withdrawn. [Rods 5 and 6 should be evenly withdrawn to the last recorded position required (usually 23.00 in.) to make the heat power equal to the instrument power.] This operation is performed so that shim rods 5 and 6 and the neutron chambers are in approximately the same relationship; consequently, the shadowing effect from rods 5 and 6 will be about the same during power operation.

2.1.6. Requirements and procedures for startup in Mode 2

1. Startup operation. Whether the reactor is subcritical or critical at zero power, at an intermediate level, or in the power range and it is desired to make the reactor critical or to increase the reactor power level, the minimum instrumentation shall be:
   a. flapper-valve position indicator,
   b. two level-safety channels,
   c. one log-N period channel,
   d. one neutron-level-detection channel (log-N or fission chamber) that is reliably detecting the neutron level in the reactor,
   e. one ΔT channel,
   f. one primary-coolant flow channel,
   g. one core ΔP channel,
   h. one radiation monitor located in the reactor room,
   i. one continuous air monitor located in the reactor room,
   j. one operating radiation-detection monitor associated with the reactor cooling system, and
   k. one instrument, located in the reactor room, which will actuate the building containment system upon detection of a selected radiation level not to exceed 150 mr/h.
2. Preparation for startup in Mode 2
   a. Check of the Reactor Area. The reactor area should be checked to ensure that this area is in a safe condition for reactor operation. (These

checks should be made while completing Section A of the startup checklist.)

(1) Determine that the reactor loading and the reactor position in the pool is proper.

(2) Determine that all core pieces are in place and properly seated and that all experiment rigs are in their proper locations and secured.

(3) Ensure that the shim-rod drive units and the fission-chamber drive units are in their proper positions, that cable connections are installed on the proper shim-rod drives, and that these units are fastened to the hold-down arms.

(4) Determine that all core work has been completed and make a final inspection of the core for foreign objects and for any abnormalities.

(5) Determine that the reactor carriage, reactor bridge, and the instrument bridge are locked in position.

b. Check of Experiment Facilities. The experiment facilities should be checked to ensure that they are in a safe condition for reactor operation. (These checks should be made while completing Section B of the startup checklist.)

(1) Determine that all changes to experiments are completed.

(2) Determine that all experiment information sheets are current.

(3) Determine that Experiment Safety-Check Sheets have been completed by instrument engineers for all applicable experiments.

(4) Determine that Special Instruction Sheets for all experiments are complete and current.

c. Startup of Water Systems. The water systems must be put into operation and checked for proper operation. (These checks should be made while completing Section D of the startup checklist.)

(1) Determine that the pool is filled to the proper level and that all pool-level alarms have been cleared.

(2) Determine that the primary cooling system has been filled and vented.

(3) Determine that the flapper valve is in the fully closed position.

(4) Determine that the primary-cooling-system flow is, or has been, properly established.

(5) Determine that flow through the demineralizer is, or has been, properly established.

(6) Determine that the water purity is adequate.

(7) Determine that the secondary cooling system is filled, treated, and ready for service.

(8) Determine that both the exit water and the decay-tank off-gas activity monitors are operating.

(9) Determine that the skimmer system is in operation.

d. Instrumentation Checks. (These checks should be made while completing Section E of the startup checklist.)

(1) Determine that local operation has been selected.

(2) Determine that all utility services are in order as specified by the startup checklist.

(3) Determine that all recorders, amplifiers, etc., are turned on at least one-half hour prior to operation of the reactor.

(4) Determine that the ionization chambers are in their proper locations and at their proper elevations. (Check the log book for any movement during the preceding shutdown.)

(5) Determine that the fission-chamber channel is calibrated and operating properly.

(a) Set the log count-rate meter on CALIBRATE and adjust until the log count-rate recorder indicates 60 counts/s. Return the log count-rate meter to USE.

(b) Withdraw the fission chamber until the counting rate is observed to decrease. The count-rate period recorder should indicate a negative period. Then insert the fission chamber until the counting rate is observed to increase. The count-rate period recorder should indicate a

positive period. Finally, withdraw the fission chamber to its withdraw limit.

(c) While comparing the counting rate of the channel to the posted calibration curve [for response to noise (alpha) only], vary the pulse height setting (PHS). Determine that the resulting response curve for the channel is essentially the same as that posted [i.e., that the noise (alpha) response has not shifted].

(d) While withdrawing one shim rod, insert or withdraw the fission chamber intermittently. Rod withdrawal should be inhibited as soon as the chamber is moved.

(e) While withdrawing one shim rod, vary the pulse height setting (PHS) to cause a period indication of <25 s. Rod withdrawal should stop.

(f) With one rod off seat, vary the PHS to cause a period indication of <7 s. A reverse should occur, inserting the rod.

(g) Set the PHS and the gain on the pulse amplifier at the posted startup value.

(h) Position the fission chamber to obtain a counting rate >20 but <40 counts/s.

(6) Determine that the log-N channel is adjusted properly.

(a) Determine that the log-N channel power-supply meters indicate that the positive voltage and negative voltage applied to the chamber are within ±10% of the posted values.

(b) Using the built-in "ground," "lo-calibrate," and "hi-calibrate" signals, calibrate the log-N amplifier with the log-N recorder using the "Gnd set," "calibrate," and "gain" potentiometers, respectively. Then return the amplifier switch to the OPERATE position.

(c) Determine that the chamber is connected to the log-N amplifier by depressing the negative voltage inhibit push button and observe an upscale reading on the log-N and log-N period recorders. Then turn the amplifier switch to the GROUND position.

(7) Determine that the servo channel is adjusted properly.

(a) Determine that the servo channel power-supply meters indicate that the positive voltage and negative voltage applied to the chamber are with ±10% of the posted values.

(b) Push the micromicroammeter "zero" button, set the "power range" selector switch on 20 W, and zero the micromicroammeter.

(c) Set the power range switch on 20 kW and determine that the chamber is connected to the micromicroammeter by depressing the negative voltage inhibit push button and observe an upscale reading on the micromicroammeter. Return the range switch to its previous position.

(8) Check the control-rod magnet currents for gross deviations from a normal value of 0.5 A (should be 0.5 ± 0.1 A). (If the magnet current for any rod differs by more than ±0.1 A from the normal value, contact the reactor supervisor.)

(9) Calibrate the level-safety channels (quarterly).

(10) Perform the rod-drive and rod-response test following repositioning of, or any work on, the drive units (also performed quarterly).

(11) Perform the scram checks. (These checks involve raising all control rods about 1-in. and scramming them by the local manual button, remote manual scram switch, log-N amplifier period button, and each level-safety Jordan button, in turn. This section of the checklist is self-explanatory.) Reset all flux trip lights on the dual voltage comparators, and turn log-N to OPERATE.

(12) Perform the check of the magnet pulse test equipment.

(a) Raise all rods approximately 1-in.

(b) Depress, in turn, each "pulse test" push button on the three sigma bus converter modules and observe

(i) that there is a flash of each of two neon lamps on the sigma bus converter;

(ii) that the dual voltage comparator flux trip amber light comes on; and

(iii) that both shim rods associated with the bin under test remain withdrawn (no drops).

(13) Determine that the sigma bus monitor (meter) on each sigma bus converter module indicates in the green N_L band.

(14) Set the "power range" switch on the desired range. Then set the servo-demand thumbwheel for the desired fraction of that range.

(15) Determine that all radiation monitors are operating properly.

(16) Determine that all instrument channels are working properly and the corresponding recorders are tracking.

(17) If the annunciator panels are not clear, the reason for any alarm should be determined and evaluated.

e. Other checks (These checks should be made while completing Section F of the startup checklist.)

(1) Determine that the public-address system is operating properly.

(2) Review the schedule for operation, including power level changes and proposed run time.

(3) Announce the expected startup time over the public-address system if requested by experimenters.

(4) Determine that the core-loading chart is up-to-date and properly approved following any core changes.

(5) Determine that the containment system is in the condition required for reactor startup. (Refer to Sections 7.2.4 and 10.1 for the proper operating conditions of the containment system.)

(6) If the power level schedule indicates extended periods of high-power operation, the ventilating system for the pool area must be functioning properly.

3. Startup in Mode 2 via operator start*

a. Since all checks listed in Section 2.1.6(2) must

---

*Operator start (manual control) may be used for special startups but is normally used only when the servo system is not functioning properly.

have been satisfactorily completed, certain required conditions should exist; however, these conditions are restated below.

(1) Key switch S-1 in the ON position.

(2) Preferred-rod selector switch S-10 in the desired position; i.e., to select rod 1, 2, or 3.

(3) Raise-clutch mode switch S-3 in the RUN position.

(4) Individual "clutch actuate" switches S-12 through S-15 and S-22 through S-23 in the HOLD position.

(5) Remote scram switch S-11 in OPERATE and scrams reset by pushing the scram-reset button, PB-1. The local scram switch is a push button, PB-2.

(6) No reverse request exists.

(7) Fission chamber positioned so that the output of the count-rate channel is >2 counts/s. (If it is desired to operate the fission chamber in the automatic mode, any repositioning will be accomplished automatically.)

(8) If the desired operating power level is <400 kW (20% N_F), omit step 9, below.

(9) If the desired operating power level is >400 kW (20% N_F), the "power range" switch must

be on the 2-MW setting and the servo demand must be at its lower limit (5% N_F).

b. Move the "group-actuate" switch, S-4, to the WITHDRAW position and hold the switch in that position. If a 25-s period is detected by either the count-rate channel or the log-N channel, rod withdrawal is inhibited until the period becomes longer. (Until the log-N channel indicates a power level of 0.01% N_F and log-N confidence is obtained, additional conditions of the count-rate channel which inhibit rod withdrawal are: the count-rate meter not in OPERATE; the counting rate less than 2 counts/s or greater than 8000 counts/s; and the fission chamber in motion.)

c. During this stage, the proper "power range" switch setting must be selected (even though the servo system is not on) or a reverse will be initiated. The switch should have been set for the desired operating range prior to the startup as required by the startup checklist. (The other alternative would require the operator to increase the range-switch setting as the power level increases; however, this distraction of the operator is undesirable when the reactor is under manual control.)

d. If the desired operating power level is >400 kW (20% N_F), "run" must be obtained. To obtain "run," the power level (as indicated by the log-N channel) must be >1.5% N_F and <10% N_F, the "power range" switch must be on the 2-MW setting, the log-N period must be >100 s, and the servo demand must be at its lower limit (5% N_F), even though the servo system is OFF. If these conditions exist, the run mode is automatically obtained.

e. When the desired power level is obtained, the positions of the shim rods should be adjusted so that rods 1 through 4 are evenly withdrawn. [Rods 5 and 6 should be evenly withdrawn to the last recorded position required (usually 23.00 in.) to make the heat power equal to the instrument power.] This operation is performed so that shim rods 5 and 6 and the neutron chambers are in approximately the same relationship; consequently, the shadowing effect from rods 5 and 6 will be about the same during power operation.

4. Startup in Mode 2 via instrument start

a. Since all checks listed in Section 2.1.6.2 must have been satisfactorily completed, certain required conditions should exist; however, these conditions are restated below.

(1) Key switch S-1 in the ON position.

(2) Preferred-rod selector switch S-10 in the desired position; i.e., to select rod 1, 2, or 3.

(3) Raise-clutch mode switch S-3 in the RUN position.

(4) Individual "clutch actuate" switches S-12

through S-15 and S-22 through S-23 in the HOLD position.

(5) Remote scram switch S-11 in OPERATE and scrams reset by pushing the scram-reset button, PB-1. The local scram switch is a push button, PB-2.

(6) No reverse request exists.

(7) Fission chamber positioned so that the output of the count-rate channel is >20 counts/s but <40 counts/s; the fission chamber should be in the automatic mode, i.e., switch S-19 should be in the AUTO position.

(8) If the desired operating power level is not >200 kW (10% N_F), omit step 9, below.

(9) If the desired operating power level is >200 kW (10% N_F), the "power range" switch must be on the 2-MW setting and the servo demand must be at its lower limit (5% N_F).

b. Turn the instrument-start switch to the ON position; this will initiate the startup sequence. The following events will occur as demanded by the status of the reactor system:

(1) The servo system will be activated.

(2) The rods will be withdrawn continuously. If a 25-s period is detected by either the count-rate channel or the log-N channel, rod withdrawal is inhibited until the period becomes

longer. (Until the log-N channel indicates a power level of 0.01% N_F and log-N confidence is obtained, several additional conditions of the count-rate channel which inhibit rod withdrawal are: the count-rate meter not in OPERATE; the counting rate less than 2 counts/s or greater than 8000 counts/s; and the fission chamber in motion.)

c. When the servo system senses an "insert error," the instrument (controlled) startup will be terminated. The servo will maintain the reactor power level at the level demanded.

d. If the desired power level is >200 kW (10% N_F), "run" must be obtained. "Run" should be obtained as soon as the servo system stabilizes the reactor power at the 100-kW (5% N_F) level; i.e., the required conditions should naturally result from servo system action. The servo demand may then be increased to the desired level by manipulating the demand setpoint.

e. When the desired power level is obtained, the positions of the shim rods should be adjusted so that rods 1 through 4 are evenly withdrawn. [Rods 5 and 6 should be evenly withdrawn to the last recorded position required (usually 23.00 in.) to make the heat power equal to the instrument power.] This operation is performed so that shim rods 5 and 6 and the neutron chambers are in approximately the same relationship; consequently, the shadowing effect from rods 5 and 6 will be about the same during power operation.

5. <u>Startup in Mode 2 via operator start with servo</u>

   a. Since all checks listed in Section 2.1.6(2) must have been satisfactorily completed, certain required conditions should exist; however, these conditions are restated below.

      (1) Key switch S-1 in the ON position.

      (2) Preferred-rod selector switch S-10 in the desired position; i.e., to select rod 1, 2, or 3.

      (3) Raise-clutch mode switch S-3 in the RUN position.

      (4) Individual "clutch actuate" switches S-12 through S-15 and S-22 through S-23 in the HOLD position.

      (5) Remote scram switch S-11 in OPERATE and scrams reset by pushing the scram-reset button, PB-1. The local scram switch is a push button, PB-2.

      (6) No reverse request exists.

      (7) Fission chamber positioned so that the output of the count-rate channel is >2 counts/s. (If it is desired to operate the fission chamber in the automatic mode, any repositioning will be accomplished automatically.)

      (8) If the desired operating power level is not >200 kW (10% N_F), omit step 9, below.

(9) If the desired operating power level is >200 kW (10% N_F), the "power range" switch must be on the 2-MW setting and the servo demand must be at its lower limit (5% N_F).

b. Turn the servo switch, S-17, to the ON position and then return it to the HOLD position. The servo system will be energized unless the regulating rod is at either the upper or lower limit of the regulating-rod span.

c. Move the "group-actuate" switch, S-4, to the WITHDRAW position and hold the switch in that position. If a 25-s period is detected by either the count-rate channel or the log-N channel, rod withdrawal is inhibited until the period becomes longer. (Until the log-N channel indicates a power level of 0.01% N_F and log-N confidence is obtained, additional conditions of the count-rate channel which inhibit withdrawal are: the count-rate meter not in OPERATE; the counting rate less than 2 counts/s or greater than 8000 counts/s; and the fission chamber in motion.)

d. When the servo system senses an "insert error," the servo will maintain the reactor power level at the level demanded.

e. If the desired power level is >200 kW (10% N_F), "run" must be obtained. "Run" should be obtained as soon as the servo system stabilizes the reactor power at the 100-kW (5% N_F) level; i.e., the

required conditions should naturally result from servo system action. The servo demand may then be increased to the desired level by manipulating the demand "enter setpoint" push button.

f. When the desired power level is obtained, the positions of the shim rods should be adjusted so that rods 1 through 4 are evenly withdrawn. [Rods 5 and 6 should be evenly withdrawn to the last recorded position required (usually 23.00 in.) to make the heat power equal to the instrument power.] This operation is performed so that shim rods 5 and 6 and the neutron chambers are in approximately the same relationship; consequently, the shadowing effect from rods 5 and 6 will be about the same during power operation.

2.1.7 Startup following a shutdown due to the dropping of one or more shim rods

If one or more rods are dropped as a result of either a mechanical failure or a failure in the magnet control system, the reactor will drop out of servo control and will be subcritical instantly. The following actions should be taken:

1. Inform the shift engineer of the event immediately.
2. Note any alarms (annunciators) actuated and check the dual-voltage comparators for "trip" or "latch" lights. Record all observations.
3. Since with this reactor there are usually no xenon problems necessitating an expeditious return to power, do not further withdraw the rods that have not dropped while the rod drives are retrieving the rods that have dropped.
4. After the rod's magnet and armature engage, check and record the magnet current. If the current is not normal, i.e., is not 0.5 ± 0.1 A, then the reactor supervisor or his designated alternate should be contacted. Variations in magnet

current indicate serious trouble in the magnet control system and most likely will require rather extensive study and/or repairs.

5. If the rod fails to make clutch or otherwise performs in an abnormal manner, and the condition cannot be corrected easily, complete the shutdown of the reactor and notify the reactor supervisor of the situation.
6. If the observations described above indicate only a momentary failure of the magnet control system (mechanical or instrumental), then the reactor may be returned to power as follows:
   a. Determine that the servo demand is at the 5% setting (it may be necessary to reposition the demand).
   b. Obtain servo.
   c. Raise the rod(s) which dropped to a position equivalent to "normal," i.e., 1 through 4 ganged and 5 and 6 ganged. This will ensure that the reactor is not operated at power with an abnormal rod configuration.
   d. Observe all the power and period recorder readouts as the power level is raised. After servo takes control at 100 kW and "run" has been obtained, raise the demand to the former power level. After the former power level has been reached, re-establish the previous rod positions. If any change is necessary due to an increase in xenon concentration, this change should be made by repositioning rods 1 through 4 evenly. (NOTE: A qualified supervisor must be present during all reactor startups.)

2.1.8 Return to full power following an electrical power outage

1. Loss of electrical power to the BSR complex occurs quite infrequently (four times per year, on the average),* and therefore is not considered to be a major source of trouble. The infrequency of such an event, however, serves to make a written procedure even more valuable to the personnel responsible for restarting the reactor following such an electrical power outage. The reader is reminded that while a power outage is in effect, the diesel generator located at the ORR (Building 3042) will supply power to the following:
   a. all the control circuits and pilot lights,
   b. all the process instrumentation,
   c. all the recorders,
   d. the rod-drive motors and position indicators,
   e. the fission-chamber drive motor and position indicator,
   f. the television monitoring system,
   g. the facility radiation and contamination alarm system,
   h. the annunciators,
   i. "reactor on" lights,
   j. receptacles on the bridge, in the control room vertical panels, and in control room panel H,
   k. building public-address system, and
   l. emergency lights in the control room and in the reactor bay.

---

*Outages lasting more than a few seconds are quite uncommon, averaging less than one per year.

2. After the TVA power is restored, the following actions should be taken:
   a. Clear all scram conditions as needed.
   b. If the power was off for any significant length of time (more than 30 min), allow a 5-min warm-up time on the safety system instrumentation.
   c. Insert the fission chamber as required.
   d. Recalibrate the log-N channel.
   e. Perform the Jordon button checks on the sigma amplifiers.
   f. Perform services to experimenters' equipment as requested.
   g. If the power failure affected the cooling system, re-establish the flow if applicable.
   h. Ensure that the building cell-ventilation system is in service.
   i. Obtain instrument start and return to power.
   j. Stop the diesel generator operation and return the control-selector switch to AUTOMATIC.
   k. Reset the heating and ventilating units as needed.
3. Reiterating, the supervisor in charge must be present for any withdrawal of rods.

2.1.9 Priorities in restarting the ORR and/or BSR

Frequently, the ORR and BSR will be operated simultaneously from the same control room. Generally, when operating the BSR from the remote console in the ORR control room, only one operator will be involved in control-room work, with one shift engineer directly responsible for the operations. (Specific

procedures pertaining to remote operation are provided in the ORR operating manual and the BSR operating manual Section 2.2.4.)

On occasion, a situation may arise in which both reactors simultaneously encounter an unscheduled shutdown; e.g., because of an electrical power outage. (Operating history indicates that this occurs about four times each year.) To provide for an orderly recovery from unscheduled shutdowns, it is necessary to list the priorities to be used in restarting the reactors.

When an unscheduled shutdown of both reactors does occur, the following priorities should be exercised in restarting the reactors. However, each facility should be checked to ensure that it is in an acceptable shutdown condition before any restart begins.

1. Priority number one - ORR. Since the ORR operates at the highest neutron flux, the problem of xenon poisoning is of prime importance. Consequently, following a shutdown, the ORR should be restarted as soon as possible, consistent with established operating procedures of the ORR operating manual and sound judgment, but never sacrificing safety to minimize reactor downtime. The BSR should remain in a secured condition until the ORR has been returned to power unless individual reactor supervision is available. In the event that the ORR has been poisoned with xenon and requires a refueling, the BSR should be restarted as soon as possible consistent with good operating philosophy and procedures. This should be performed prior to refueling the

ORR or concurrent with the refueling if an adequate number of qualified personnel is available.

2. Priority number two - BSR. The BSR should be restarted following the established operating procedures as detailed in Section 2.1 of the BSR operating manual as soon as the ORR has attained full-power operation and conditions are normal.

2.1.10 Priorities in making operational decisions

Section 2.1.9 outlines the standard priorities for deciding which reactor to start up first in case both are scrammed simultaneously by a loss of electrical power. Other circumstances might arise which could cause unusual operation at either of the reactors but still not shut either of them down. For instance, an automatic power setback might occur, a control system might suddenly require constant attention, or radiation alarms might sound from several sources. Unusual occurrences of this type also require that the operator and the supervisor make a decision about what to do, and sometimes the action to be taken must follow some priority order. Here again, the general priority would be: ORR first, and BSR second.

Furthermore, it should also be kept in mind that either or both of the reactors may be shut down by the operator on his own authority if he feels that too much is going on for him to handle his responsibility properly.

It is possible that special circumstances requiring new priorities might arise. For instance, an experiment at the

BSR might be so important to the Laboratory that during the term of the special experiment the BSR would be kept operating or started up after an electrical power outage in preference to the ORR. All likely circumstances usually cannot be anticipated; therefore, it is impossible to predict all of those with a low probability for occurrence.

In emergencies such as these when normal priorities cannot be used, it is expected that the supervisor on duty will use all of the information at hand in deciding what course to take instead of blindly following rules that have been set up for other situations.

2.2. Steady-State Operations

2.2.1. Requirements for continuous power operation

1. General Requirements. The other reactors for which the Operations Division is responsible are normally operated at their full-power rating. However, depending upon the requirements of the various experimenters, the power level and duration of operation between shutdowns at the BSR may vary considerably. When the reactor is operating, numerous checks are to be made and pertinent data recorded on a routine schedule. (Examples of the data sheets to be filled out by the console operator are given in Section 12.) Other miscellaneous duties associated with operating the reactor are to be performed by the roving operator. (Examples of the shift check sheets are also given in Section 12.)

If the power level is to be varied during operation of the reactor, a qualified supervisor and reactor operator must be present in the control room. If the shift supervisor plans on temporarily leaving the immediate area, his whereabouts should be made known to the operator to facilitate communication, if necessary.

2. Manning requirements

a. Security-Alarmed Area. The reactor bay is monitored by signals sent to the Emergency Control Center.

When no member of Operations personnel is in the area, the reactor bay doors must be locked and the security system monitor activated by placing the key-operated "secure-access" switch in the SECURE position and the red toggle switch in ON position. If anyone enters the reactor bay, the Emergency Control Center will receive an alarm (audio and visual) and investigate.

When a member of Operations personnel is in the area, the security system monitor may be deactivated by placing the key-operated switch in ACCESS and the red toggle switch in OFF. An amber access light at the Emergency Control Center will remain on.

To activate the Alarm Service:

1. Call 4-6646, the Communications Officer. Identify yourself and give your badge number. State that you are activating the alarm.

2. Wait until the alarm is in alarm condition, walk around in the area, and then ask the Communications Officer if he received an alarm. If an alarm was received, the alarm is in service.
3. State that you are leaving the area.

   To deactivate the Alarm Service:

   a. Call 4-6646, the Communications Officer. Identify yourself and give your badge number. State that you are going into the alarmed area.
   b. Lay the phone down, enter area, and deactivate the alarm.
   c. Ask the Communications Officer if he received an alarm. If an alarm was not received, call 4-7202, Security.

b. Reactor bay locked.* It is not necessary for Operations personnel to be present in the area when the reactor bay doors are locked and the Security Monitoring System is in SECURE. Personnel who have been issued the proper key can, of course, enter for routine or special checks or other jobs after notifying the Emergency Control Center.

---

*Except for very unusual circumstances, i.e., local operation with the reactor bay locked, the control room will be locked at all times when the reactor bay is locked.

If experiment or maintenance personnel must enter the reactor bay when it is locked, they are instructed by signs to request admittance from the ORR-BSR operations shift supervisor, who will notify the Emergency Control Center. When the experimenter (or others) has access to the locked reactor bay during "off shifts," he should contact the shift supervisor hourly and inform the latter of his status. If the experimenter or maintenence personnel must work over the pool (e.g., on the instrument bridge), they are instructed by signs to contact the shift supervisor; the latter should determine whether he should furnish supervision or assistance and make arrangements accordingly. At no time will any individual be allowed to work over the pool without the presence of another person in the reactor bay.

c. Reactor bay unlocked. During steady state operations and/or routine activities, the reactor bay may remain unlocked if a qualified reactor operator or senior reactor operator is present. A member of the operations supervisory staff (qualified as a senior reactor operator) will be present to coordinate certain activities as listed in other parts of the "BSR Operating Manual." It will sometimes be necessary for him to go to the pump house, to the cooling tower, or with maintenance personnel; however, he should attempt to keep such absences from

his primary station to an absolute minimum. (NOTE: The above requirements are in effect whether or not the reactor is in operation.)

On occasion, it will be desirable to operate the reactor from the local console. During these periods, the operator will remain at the local console and will not leave the control room until properly relieved by a qualified operator.

Except during the times when the reactor is being operated locally, the control room will be locked when a member of operations is not in the immediate vicinity of the control room. (Operations personnel who have been issued the proper key can, of course, enter briefly when necessary.)

3. Minimum safety and control instrumentation required during power operation in Mode 1:
    a. Flapper-valve position indicator.
    b. Two level-safety channels.
    c. One operating radiation-detection monitor which provides information on radioactivity in the reactor cooling system.
    d. One instrument, located in the reactor room, which is capable of actuating the building containment system when a selected radiation level, not to exceed 150 mr/h, occurs.

4. Minimum safety and control instrumentation required during power operation in Mode 2:

   a. Flapper-valve position indicator.
   b. Two level-safety channels.
   c. One ΔT channel.
   d. One core ΔP channel.
   e. One primary-coolant flow channel.
   f. One operating radiation-detection monitor associated with the reactor cooling system.
   g. One instrument, located in the reactor room, which is capable of activating the building containment system when a selected radiation level, not to exceed 150 mr/h, occurs.

2.2.2. Heat-power calculations

The primary standard for the power level of the reactor is the calculated heat power. These calculations are based on the heat gain in the primary-water system during Mode-2 operation and are computed as follows:

$$\text{Power (kW)} = \Delta T(^\circ F) \times \text{flow rate (gpm)} \times \frac{0.1448 \text{ kW}}{(1 \text{ gpm} \times 1^\circ F)}.$$

This heat power is calculated and recorded three times per shift and, as listed, is actually the accumulated energy for one hour of operation (see Example 12.2). To compute the total energy for the shift, assuming no variations in power level, the three calculated values should be averaged and the average multipled by eight.

If the power level is varied between the times calculations are made, the accumulated energy will have to be illustrated in the following example:

> From 2:40 to 3:10 p.m. the reactor power was varied; preceding and following this interim, the power level was 1500 kW (actually 1530 by heat balance preceding the shutdown and 1510 kW after startup).

Assume that:

the accumulated energy from 2:00 to 3:00 p.m. was 1068 kWh (based on instrument power);

the accumulated energy from 3:00 to 4:00 p.m. was 1300 kWh (based on instrument power);

since: corrected heat energy, kWh = accumulated energy based on instrument power x $\frac{\text{actual heat power}}{\text{instrument power}}$;

then, kWh for the seventh hour = 1068 x $\frac{1530^*}{1500}$ (energy accumulated between the hours of 2:00 and 3:00 p.m., column 7); and

kWh for the eighth hour = 1300 x $\frac{1510^{**}}{1500}$ (energy accumulated between the hours of 3:00 and 4:00 p.m., column 8).

---

*In this case, the actual heat power calculated preceding the shutdown should be used.

**In this case, the actual heat power obtained after returning to power (and after the reactor has reached equilibrium) should be used.

Also, to calculate the accumulated energy for the first six hours, the remaining two routinely calculated values should be averaged and the average multiplied by six.

To ensure comparability between the daily summaries of instrument and heat energies, it is advantageous, during periods of varied-power-level operation, to record the corrected heat energies in the hourly columns when applicable. This will facilitate summing the energy generated during the shift since simple averaging would not be applicable for periods of varied-power-level operation.

One of the primary uses for the data described in this section is in the computation of fuel consumption. At present, 100 kW (and above) is to be considered as an accountable power level. However, if the reactor is to be operated at a lower power level for an extended period of time, the power should be accounted for if it is expected that more than 100 kWh will be accumulated. (It should be noted that any period of time when the reactor is at a power level of 100 kW or greater is to be reported as "operating time;" this is consistent with the policy at the other reactors. In addition, if the reactor is at a lower power level but is providing a planned and useful irradiation of an experiment or a sample, the period involved is to be reported as "operating time."

During Mode-1 operation, there is no flow and ΔT; consequently, the power level and energy data are based solely on instrument values if accountability is applicable. To complete any data sheet which requires heat-power information, record the instrument power and "Mode 1."

2.2.3. Shim-rod positions

It is desirable to keep rods 1 through 4 evenly withdrawn. [Rods 5 and 6 should be evenly withdrawn to the position required (usually 23.00 in.) to make the heat power equal to the instrument power.] Twice each shift, rods 1 through 4 should be balanced at the local console by an operator. Rods 5 and 6 should not be repositioned unless the shift supervisor determines that repositioning is required to make the heat power equal the instrument power.

2.2.4. Remote control of the BSR - operating procedures

1. Introduction. The BSR remote-control instrumentation (see Section 3.4) allows the operator at this console to do the following:
   a. Initiate an evacuation signal, silence the evacuation horn, and initiate building containment (using the red, green, and black buttons, respectively, in the upper left corner).
   b. Observe if a rod is seated (using the two square indicator-light panels marked "1, 2, 3, 4, 5, and 6" in the upper right corner).
   c. Observe when an annunciator alarms. (Both audible and visual alarms are provided through the remote annunciator panels. In addition, console lights indicate whether the annunciator is located in the nuclear group or in the process group.) The BSR remote annunciator panels are located above ORR relay cabinet 'A' and consist of three banks of 12 annunciators each, plus a fourth bank of

four (experiment alarms). The arrangement of annunciators in the four banks is shown in Fig. 2.3.

d. Observe if there is an increase in the radiation level (using two meters near the upper left corner: the left meter indicates the output of the 5 R/h monitor; the right meter indicates the output of the high-bay monitron).

e. Observe the status of the reactor in regard to the key-switch position and to the remote-or-local control mode selection (using the "reactor on" and the BSR or ORR indicator lights).

f. Scram the reactor (using red-colored switch). This control is effective when in either local or remote operation.

g. Lower the demand (manual setback).

h. Insert and (within limits) withdraw the preferred rod.

i. Acknowledge and reset annunciator alarms.

j. Observe the power level as monitored by the No. 1 level-safety channel (using the left meter at the center of the console).

k. Operate the control-room television cameras.

l. Monitor the control room for abnormal sounds (using the surveillance sound system).

Right panel

Primary Inlet Hi temp	Reactor Core Hi ΔT	Decay Tank Hi/Lo level	Jet Off
Resistivity Lo	Tower Basin Hi Temp	Tower Basin Lo Temp	Sec Coolant Lo Flow
Sec Coolant pH Hi/Lo	PCA Hi Temp	Cell Vent Low Flow	Log Gamma Radiation High

Right center panel

20% N_F Not in Run	Servo Off	Count Rate Period <7 s	Log-N Period <7 s
Decay Tank Hi Rad	Recorder Power Off	Sigma Amp Line Voltage	Spare
Flapper	Low ΔP	Low Primary Flow	Pool Level Low

Left center panel

RS&C System	Monitron Hi Level	Shim Request	Pool Outlet Hi Radiation
Mid Range Lock Out	Setback	Reverse	Log-N Reverse
Slow Scram	Fast Scram	Safety Trouble	Two Safety Trouble

Left panel

Exp #1	Exp #2	Exp #3	Exp #4

Fig. 2.3. BSR remote annunciator panels.

2. Procedure for transferring to remote operation. After the BSR is started up and all the necessary checks are made, the reactor may be operated remotely from the remote console located in Building 3042. The procedure for transferring control of the reactor is as follows:

   a. Have the remote operator verify proper audio and video communication. (If neither control room television camera is operable, the reactor should not be operated remotely.)

   b. Turn the control-selector switch on the BSR control panel clockwise until the "remote" light comes on at the local console; the "ORR" light, located on the remote panel, should also come on.

   c. Simulate an alarm condition* for the remote operator to observe, acknowledge, and reset; verify that the remote operator can reposition the preferred rod.

   d. Inform the remote operator of any pertinent information; then tell him to assume the responsibility for operating the BSR.

   e. Request all individuals in the local BSR control room to leave; then lock all doors to the control

---

*It sometimes is convenient to stop the secondary flow monentarily to initiate an alarm. "E" panel switches can also be used, if setbacks and scrams are carefully avoided.

room and control room annex. (NOTE: If it is necessary for any Reactor Operations Section personnel to remain in the control room, they should receive permission from the supervisor in charge.)

3. Procedure for remote operation

   a. Routine operation at equilibrium conditions. As a minimum, routine surveys using the control room TV will be made on an hourly basis by scanning the instrument panels to observe for possible changes in the operation of the system. (The surveillance sound system will be used to listen for any abnormal sounds in the local control room.) Any indication of abnormal conditions will be investigated immediately by making detailed close-range readings; and, if further action is needed, supervision should be contacted immediately.

   b. Data collection. Once per hour the readout of the three level-safety channels, the ΔT recorder, and the flow recorder should be recorded. At least three times per shift, the positions of the shim rods, the inlet temperature, the outlet temperature, the exit-water radioactivity, and the log-N channel output should be recorded; in addition, a heat balance should be calculated.

   c. Power level adjustment. All startup and power-level adjustments will be made at the local console. The remote console has no provisions for

increasing the power level (demand increase); however, a spring-loaded toggle switch can be used from the remote console to lower the demand (setback switch).

d. Regulating-rod position adjustment. It will be necessary from time to time to reposition the preferred rod to maintain the regulating-rod limit within the desired range (10-90%) with respect to the limit switches. This is accomplished while viewing the regulating-rod position recorder at close range with the TV and then moving the preferred rod a small increment.* Following each movement of the preferred rod, a scan of the appropriate instruments should be made to ensure that the system is still in equilibrium. This procedure should be repeated until the desired reading on the regulating-rod position recorder is obtained.

e. Annunciator station. Should an annunciator be actuated, the operator should immediately look at the remote panel annunciator lights to determine the nature of the alarm. After acknowledging the

---

*The remote meter for the No. 1 safety channel should also be observed.

alarm, he should observe the appropriate local instrumentation with the TV to determine the extent of any changes in the parameters. If corrective action cannot be taken from the remote controls, the supervisor should be notified immediately. The supervisor will investigate and take corrective action. (If the shift supervisor cannot be located immediately, the operator has authority to scram the reactor if he decides it is advisable.)

f. Emergency actions

(1) TV failure. If a failure should occur in both of the control room TV systems, the reactor should be scrammed immediately. The shift supervisor should be informed of this action immediately so that further action can be taken. Operation of the BSR may be resumed with personnel at the local controls until the TV system has been repaired and declared reliable.

(2) Servo failure. If the "servo off" annunciator alarms, or if the reactor operator's observations lead him to believe that the servo system is improperly controlling the reactor, he should immediately scram the reactor and notify the shift supervisor.

(3) Evacuation alarms. If the building-evacuation-alarm system is actuated by the instruments, the following action should be taken:

(a) Scram the reactor.

(b) Check the following instruments to aid in evaluating conditions:

1) the two radiation-indicating meters on the remote console,

2) the local facility radiation and contamination alarm system at the local control room (should be scanned with the control-room television system), and

3) the miscellaneous radiation recorder at the local control room (should be scanned with the control-room television system).

(c) The shift supervisor will direct activities as prescribed by the emergency procedures for the Reactor Operations Section (Section 10.6).

2.3. Shutdowns

2.3.1. Shutting down the reactor

The reactor will usually be shut down at some time specified by an experimenter as a requirement for his particular test. The reactor

is usually shut down by scramming with the scram button on the local console following the termination of any particular run. The following action should be taken if the reactor is to remain down for any significant period of time (more than a few minutes):

1. Be sure that all six seat lights are on.
2. Lower the demand to the lower limit.
3. Place the range-selector switch on the lowest value practical, without having the servo indicator drive full scale.
4. Note the performance of the log-N instrumentation. The log-N amplifier mode switch should be set in the LOW CALIBRATE position.
5. De-energize the secondary system as follows:
   a. fans in OFF,
   b. pump in OFF,
   c. blow-down valves closed,
   d. acid-addition system OFF,
   e. chemical addition system OFF,
   f. bypass valve on riser to basin OPEN (depending on outside temperature), and
   g. air-conditioning pump operating.
6. Check the primary pump for proper operation. The primary flow should be stopped for shutdowns of long duration.
7. If the primary flow is stopped, close valve HCV-54 and open valve HCV-3 to continue demineralizer operation while the primary flow is off.
8. If primary flow is stopped, move the flapper valve to OPEN.
9. Insert the fission chamber to give about 20 counts/s and leave the chamber drive in the AUTOMATIC mode.

10. Place the key switch in OFF, remove the key, and place the key in the lock-box located in the control room.
11. Inform the ORR console operator of the status of the reactor and have him verify proper audio and video communication, if applicable.

2.3.2. Refueling shutdowns

Although the number of shutdowns required for refueling the BSR will be relatively few, there will be occasions when fuel burnup and possibly other decreases of excess reactivity will require fuel changes.

All work to be performed during such shutdowns should be governed by Section 4.

2.3.3. Unscheduled shutdowns

When an unscheduled shutdown occurs, the shift supervisor or his designated representative should report immediately to the local control room. If there are no unexplained abnormalities, the reactor should be restarted.

2.3.4. Radiation control measures during shutdowns

The radiation control measures during shutdown of the reactor vary according to the nature of the shutdown. If water is to be drained from any part of the primary-water system for possible removal of components or any other maintenance work, a Health Physicist should be requested to monitor the area to determine if a Radiation Work Permit (RWP) might be required and to be sure that no areas are contaminated by the primary water (see Section 6.1.7. for procedures and

requirements for draining the primary-water system and Section 9 for safety procedures).

If the water is to be drained from a part or all of the reactor pool, all radioactive materials must be removed or isolated prior to the draining. After the pool or the portion of the pool has been drained, entry to the pool is subject to "contamination zone" and "radiation zone" regulations. These regulations are as follows:

1. The pool and associated area must be established as a contamination zone.
2. A valid radiation work permit must be on hand.
3. Personnel entering the pool should have on two pairs of C-zone clothing and carry two pencil meters, one direct-reading pocket dosimeter, and a film badge.
4. Upon leaving the pool, each person shall be checked for contamination, and his radiation-exposure record shall be brought up-to-date by a reactor operator.
5. If an in-pool monitron is required, it should be checked occasionally during each shift for proper operation.

It if the responsibility of the shift supervisor to ensure that all regulations are followed.

2.3.5. Reporting shutdowns

Each shutdown should be reported in the log book regardless of the number of shutdowns that occur (see Section 2.2.2 for the definitions of "operating time" and of "shutdown time").

Following any unscheduled shutdown, a detailed description of the shutdown should be recorded in the current BSR log book by the shift supervisor in charge. Such reports will aid in the determination of the source of trouble and should clearly indicate (1) the cause of the shutdown, (2) what corrections were made to permit restarting the reactor, and (3) what further preventative steps should be taken.

The reactor supervisor or his designated representative should also be made aware of the shutdown via telephone or other communication as soon after the occurrence as conditions permit, or as conditions dictate, whichever applies. If maintenance work (mechanical, electrical, or instrument) is required during other than regular duty hours, then the reactor supervisor or his designated representative should be notified immediately.

2.4. Annunciator Procedures

2.4.1. Introduction

In general, annunciator alarms indicate abnormal conditions in the process or nuclear systems. Their purpose is to alert the operator to the abnormal condition so that appropriate action may be taken.

2.4.2. Description

1. System

   The BSR is equipped with both local and remote annunciator banks, the details of which are described in

the following sections and in Section 2.2.4. The remote annunciators are actuated by relays in local stations and are not in service when the reactor is being operated in "local." With the reactor in "remote," however, both local and remote annunciators function and both may be acknowledged and reset from either the local or remote console.

2. Individual station

An annunciator station consists of a signal can which is mounted behind two translucent panels called "station sections." One section is colored* and the other is white. All stations are connected to an audible alarm. When the monitored parameter exceeds a predetermined setpoint, both sections of the individual annunciator will be lighted and the horn will sound.

An alarm is acknowledged by actuating a toggle-type electrical switch. When the switch is pushed to the left, the white section of the alarmed annunciator is darkened and the horn is silenced. The colored section will remain lighted until the condition becomes normal; when the condition becomes normal, the colored section will darken and the white section will again be lighted. The annunciator may

---

*Local annunciators are red; remote annunciators are blue.

then be reset by pushing the switch to the right causing the white section to darken. (As noted above, when operating in the remote mode, two acknowledge-reset switches, one local and one remote, are effective in acknowledging and resetting both the local and remote annunciators.)

2.4.3. Operator response

In the event of any alarm, the operator is to:

1. locate the source by identifying the lighted annunciator or annunciators,
2. acknowledge the alarm,
3. make preliminary observations to help determine the reason for the alarm and to see if any additional abnormalities result,
4. notify the supervisor of the status unless instructed otherwise, and
5. make no attempt to withdraw rods to correct for automatic reductions in the power level unless the supervisor in charge is present.

2.4.4. Annunciators - parameters, setpoints, and suggested actions

In this section the suggested course of action to be taken following each of the various alarms is detailed. In addition, whenever the power level of the reactor is lowered automatically or manually, the condition requiring the action should be investigated, understood, and corrected before attempting to re-establish the initial reactor power level. The supervisor in charge must be present whenever the reactor is made critical or the power level is to be increased.

It should also be recognized that a failure in the annunciator can itself will also initiate an alarm. If this is suspected, remove the malfunctioning unit and replace it with a spare unit. Although malfunctioning instrumentation should always be suspected, the preliminary investigation of any annunciator alarm should be motivated by the assumption that the alarm was due to a real cause.

1. Nuclear annunciators, right local panel. One of three local annunciator groups is located on control-room panel C and appears as indicated in Fig. 2.4. Refer to Fig. 2.3 for remote annunciator locations.

C-1	C-2	C-3	C-4	C-5	C-6	C-7
Log-N	Two Safety	Safety	20% N_F	Exp.	Exp.	Exp.
Reverse	Troubles	Trouble	Not in Run	No. 1	No. 2	No. 3

C-8	C-9	C-10	C-11	C-12	C-13	C-14
Shim	Servo	Sigma Amp.	Recorder	Fut.	Fut.	Fut.
Request	Off	Line Monitor	Power Off	No. 4	No. 5	No. 6

Figure 2.4. Annunciator right panel (local).

a. Log-N Reverse (C-1). This annunciator alarms if the the power level, as indicated by the log-N recorder, is 50% higher than the power level indicated on the

power-range switch. The setpoints for the five recorder switches that actuate this alarm are at 30 W (0.0015% N_F), 300 W (0.015% N_F), 3 kW (0.15% N_F), 30 kW (1.5% N_F), and 300 kW (15% N_F). This alarm will not be initiated if a negative period of 100 s or faster occurs within 1.5 s. This alarm is most likely to occur during a startup via operator start (i.e., without use of the servo system) when the range-selector switch could inadvertently be set on the improper range. Primarily, however, the log-N reverse circuit is provided to limit the results of a failure of the servo system when the reactor is being oprated in one of the lower power ranges. Normally, an alarm on this annunciator will occur simultaneously with an alarm on the reverse annunciator and with an actual reverse. This reverse will continue intermittently until the log-N setpoint is no longer exceeded. (Each time reverse action produces a negative period of 100 s or faster, reverse will be temporarily inhibited.)

If this alarm occurs at any time when the reactor is supposed to be under servo control, the condition of the servo channel and its associated control circuits should be investigated before the reactor is subsequently operated under servo control.

b. Two Safety Troubles (C-2). This annunciator alarms if two level-safety channels are malfunctioning

simultaneously. Since this type of difficulty will initiate a reverse, no efforts to resume operating the reactor should be made. In fact, if the reverse is not initiated automatically, it should be performed manually.

The operator should observe the nature of the safety trouble, if possible, and report, to the supervisor in charge, which "abnormal" lights were lighted on the composite amplifiers. Instrumentation and Controls Division personnel should ensure that two properly functioning level-safety channels are available before starting up the reactor.

c. Safety Trouble (C-3). This annunciator alarms if there is any malfunction of a level-safety channel or of the period-safety channel.

The operator should observe which safety channel initiated the alarm and what effect it had on the reactor. If the remaining two safety channels are operating satisfactorily, the safety initiating the alarm may be disconnected from the sigma bus by the supervisor in charge. NOTE: The electrical power to the recorder should be turned off before disconnecting the wiring to the sigma bus. (The safety trouble annunciator will remain in this alarm condition. In addition, if the failure was that of a level-safety channel, failure of a second level-safety channel will cause a reactor shutdown via a reverse. However, if the

initial failure was that of the log-N channel, no attempt to restart the reactor should be made following any subsequent power reduction.)

d. 20% N_F - Not in Run (C-4). This annunciator alarms when the reactor power level is 400 kW or greater (as determined by the log-N recorder) and if the conditions for "run" have not been satisfied during a startup or if the power-level selector switch position was changed from the 2-MW setting after having attained "run" and after the power level was greater than 400 kW.

Since this condition would initiate a reverse, the power level will automatically be lowered to clear the abnormal condition. To prevent this condition from recurring, the conditions for obtaining "run" must be satisfied on the next attempt at increasing the power level. These conditions are as follows:

(1) Power-level selector switch is on 2 MW.

(2) Demand is at 5%.

(3) Positive period is greater than 100 s.

(4) The log-N recorder indicates >1.5% N_F and <10% N_F.

(5) Either the servo system must not detect a withdraw error or the reactor must not be under servo control. (Remember, a reverse results in the loss of servo control.)

e. Experiment No. 1 (C-5). See item g, below.

f. Experiment No. 2 (C-6). See item g, below.

g. Experiment No. 3 (C-7). This annunciator will alarm if the E-panel switch for the particular experiment is in the NORMAL position when one of the setpoints for the experiment is exceeded. In addition, this annunciator will be in an alarm condition if the E-panel switch is in the TEST or DISCONNECT position.

If the E-panel switch is in the NORMAL position, a setback, reverse, or scram may accompany this annunciator alarm. Check the experiment instrumentation readout, refer to the experiment information notebook for the status of the experiment, and contact the experimenter for instructions, if required. NOTE: The experiment control room must be manned if an alarm condition exists while the E-panel switch is in the NORMAL position.

h. Shim Request (C-8). This annunciator alarms whenever the regulating-rod upper-limit switch is actuated while the reactor is in servo. This alarm is bypassed if the reactor is not in servo. It is also bypassed if the reactor is in the instrument-start request mode or in the instrument-start mode and is also bypassed whenever the servo demand is being raised.

As fuel is consumed, the regulating rod (No. 4) will be withdrawn by the servo system. During normal

operation, if the regulating rod is not made to insert with respect to the limit switches occasionally, the regulating rod will actuate its upper-limit switch and automatic withdrawal of the regulating rod will be inhibited. As a result, the reactor will soon become subcritical and the power will sag. From the remote console, the regulating rod may be made to insert only by withdrawing the preferred rod; from the local console, this may be achieved by withdrawing any other control rod or by withdrawing the limit switches with respect to the regulating rod.

During normal operation, an operator should balance rods 1 through 4 from the local console at least twice per shift and reposition the limit switches with respect to the regulating rod. (If the regulating rod has been continuously inserting, it should be repositioned farther out with respect to the limit switches than the midscale position and vice versa. The portion of the span of the regulating rod recorder which should be used is 10-90%.)

i. Servo Off (C-9). This annunciator alarms if the reactor is being operated remotely and if the reactor is no longer under control of the servo system. The operator at the remote console should immediately scram the reactor. The BSR should not be operated remotely in manual control (see Section 2.2.4).

j. Sigma Amp Line Monitor (C-10). This annunciator alarms and a slow scram is initiated when the ac line voltage to the safety sigma amplifiers decreases to below 105 V for a duration of 5 s. The reactor will remain scrammed until the voltage has increased to 108 V and the monitor is manually reset.

k. Recorder Power Off (C-11). This annunciator alarms if electrical power is turned off to any one of the following recorders: No. 1, 2, or 3 safety level, log-N, log-N period, count rate, count-rate period, regulating-rod position, and servo.

The operator should try to determine which recorder initiated the alarm; at the same time, the supervisor should be notified. If one of the recorders had been turned off, it should be turned on. (NOTE: if the regulating-rod recorder has failed and cannot be turned on, the status of the reactor should be considered to be the same as if the servo system has failed.) It should be realized that a failure of a second recorder would not be annunciated, since the annunciator would already be in the alarm condition.

l. Future No. 4 (C-12). This annunciator will be used for a future experiment tie-in.

m. Future No. 5 (C-13). This annunciator will be used for a future experiment tie-in.

n. Future No. 6 (C-14). This annunciator will be used for a future experiment tie-in.

2. Nuclear annunciator, left panel. The second group of annunciators is located on control-room panel D and appears as indicated in Fig. 2.5. Refer to Fig. 2.3 for remote annunciator locations.

D-1	D-2	D-3	D-4	D-5	D-6	D-7
Flapper	Low	RS&C	Containment	Log-N Period	Setback	Slow
	ΔP	System	Radiation High	<7 s		Scram

D-8	D-9	D-10	D-11	D-12	D-13	D-14
Pool level	Low	Jet	Midrange	C.R. Period		Fast
Low	Flow	Off	Lockout	<7 s	Reverse	Scram

Fig. 2.5. Annunciator left panel (local).

a. Flapper (D-1). This annunciator alarms if the flapper valve is not fully open or fully closed.

The alarm occurs routinely when the flapper valve is repositioned to change from one mode of operation to the other. (This repositioning is performed only when the reactor is shutdown and only under the direction of supervision.) If the alarm cannot be cleared, return the flapper valve to an intermediate position, then return it to the desired

position; it may not have seated properly on the first attempt.

If the alarm occurs during normal operation, the reactor should scram. If the reactor does not scram while operating in Mode 2, observe the ΔP readout and the console indicator "flapper open" or "flapper closed" lights; the annunciator can may have malfunctioned. If the reactor did not scram while operating in Mode 1, observe the console indicator lights and then scram the reactor.

b. Low ΔP (D-2). This annunciator alarms when the differential pressure across the core decreases to the pressure drop across the core corresponding to a primary flow of $\leq$850 gpm while the flapper is closed.

Observe the flow-rate recorder and the core ΔP recorder to determine if a leak may have developed in the in-pool piping. (If this alarm condition cannot be cleared when establishing flow, check the status of the swivel joint. This joint, which is located at the east wall of the pool, may be loose. The flapper valve should be visually inspected to be sure that it is completely closed.)

c. RS&C System (D-3). This annunciator alarms if there is an alarm initiated by one of the radiation monitors (monitrons) or continuous air monitors (CAMs) in the facility radiation and contamination alarm system. The caution alarms occur at 7.5 mr/h (on

monitrons) and 1000 counts/min (on CAMs); the high level alarms occur at 23 mr/h (on monitrons) and 4000 counts/min (on CAMs); and the inoperative alarms occur upon failure of a unit or its electrical power supply.

The operator should observe the facility radiation and contamination alarm system control panel to see which unit initiated the alarm and any other pertinent information.

If two monitrons or two continuous air monitors initiate a high-level alarm simultaneously, the gas-operated evacuation horn will be automatically energized. If this occurs, the reactor should be scrammed and there should be an immediate evacuation of personnel from the building as instructed in Section 10.6.

d. Containment Radiation High (D-4). This annunciator alarms if the radiation level increases as indicated at the following monitoring units:

(1) 110 mr/h at the high-bay radiation monitor, or

(2) 10 mr/h at the exit-duct at the south end of Building 3010.

The operator should notify the supervisor in charge immediately. If the radiation levels are corroborated by more than one instrument, evacuation procedures should be initiated.

e. Log-N Period <7 s (D-5). This annunciator alarms if the reactor period, as indicated by the log-N period recorder, decreases to 7 s. (This alarm should be accompanied by a reverse and a subsequent loss of servo control.) The reactor supervisor should be notified.

If the count-rate channel corroborated a positive 7-s period, it would appear that there was an unexplained addition of positive reactivity to the core. However, if the log-N channel is unreliable and causes momentary upscale spikes on the recorder, do not proceed with any startup which may be in progress. Shut down the reactor and notify the reactor supervisor and Instrumentation and Controls Division personnel of the status.

f. Setback (D-6). This annunciator alarms when any of the following conditions occur:

(1) Any experiment setback setpoint is exceeded and the particular E-panel switch is in the NORMAL position.

(2) The ΔT increases to 17°F.

(3) Any of the level-safety channels increase to read $\geq$110%. NOTE: 110% corresponds to 1.1 MW when the flapper valve is open (due to an increase in the gain of the level-safety channels by a factor of 2) and 2.2 MW when the flapper valve is closed.

(4) "Run" mode has not been attained or has been lost

and the power-selector knob on the micromicrometer is on the 2-MW setting.

During a normal reactor startup, this annunciator will be in the alarm condition if the 2-MW power range is selected. When the power level reaches 100 kW (5% demand of 2000 kW), the servo system should take control. At this time, "run" should be obtained and the annunciator will clear. (Following a setback, the demand setting should not be raised until the supervisor has arrived and evaluated the condition.)

g. Slow Scram (D-7). This annunciator alarms and a slow scram is initiated if any one of the following conditions occurs:

(1) One of the manual scram switches is actuated. (One at the local console, one at the remote console, and seven throughout the building. See Fig. 2.6 for the location of the seven located throughout the building.)

(2) The flapper valve is neither fully open nor fully closed.

(3) An experiment scram setpoint is exceeded while the E-panel switch is in NORMAL.

(4) The flapper is closed and the flow rate decreases to 750 gpm or the core ΔP decreases to the pressure drop across the core corresponding to a primary flow of $\leq$750 gpm.

(5) The pool water level decreases 4 ft below the normal operating level.

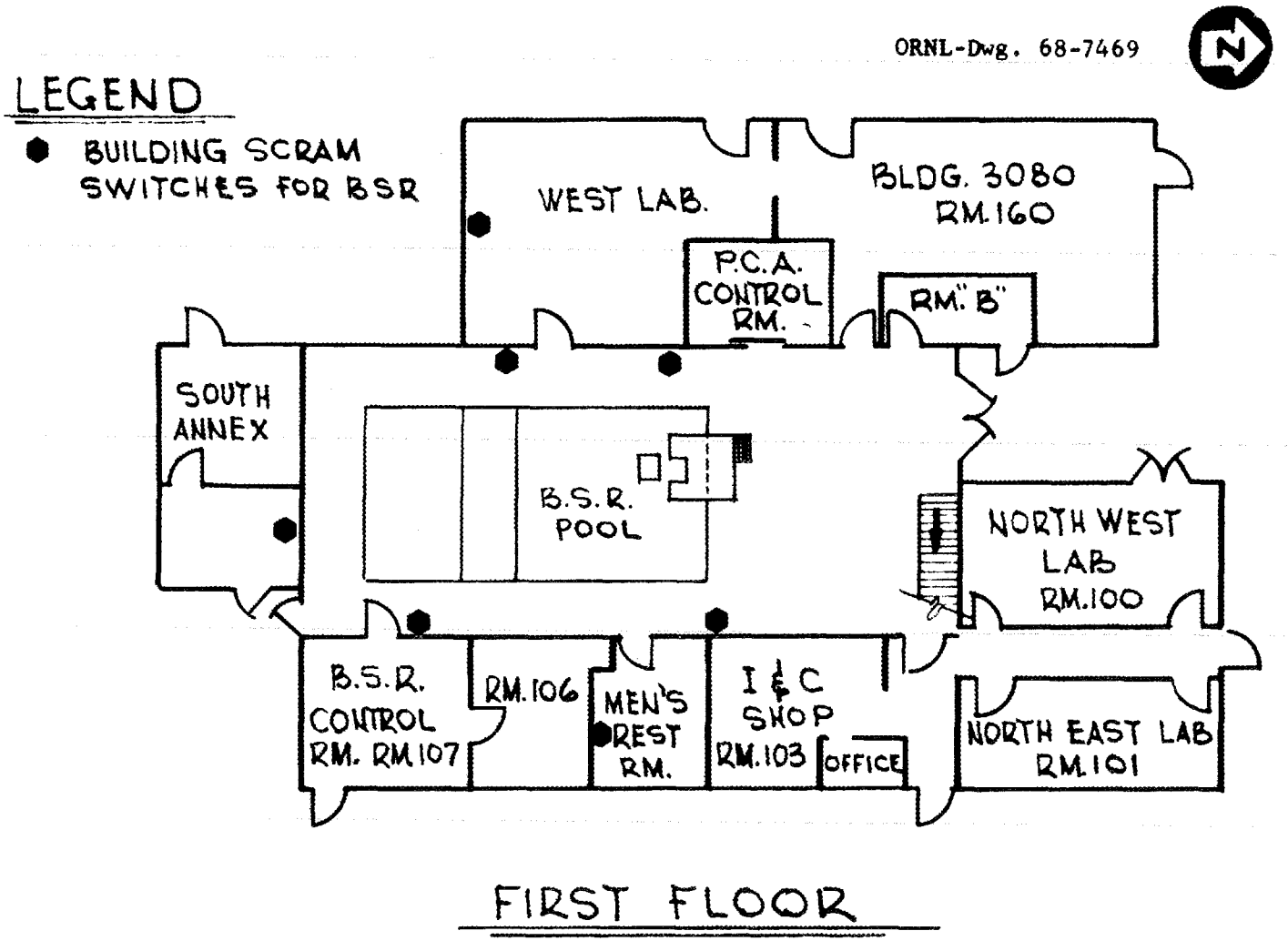

Fig. 2.6. Location of seven remote scram switches on 1st floor of BSF Building 3010.

(6) The ac line voltage to the safety sigma amplifiers decreases to below 105 V.

After the condition intiating the alarm is corrected, the reactor may be returned to the operating power level under the supervision of the shift supervisor.

h. Pool Level Low (D-8). This annunciator alarms when the pool water level is lowered 2 ft. (The normal operating level is at the 850-ft elevation.) The reactor will be scrammed if the water level decreases an additional 2 ft (to 4 ft below the normal level).

If the alarm occurs during reactor operation, the pool level should be checked visually. In addition, the flow rate, ΔP, decay-tank level, and field area should be checked. If a leak has developed, the reactor should be shut down. Any time an alarm occurs, the operating crew should follow applicable radiation precautions.

i. Low Flow (D-9). This annunciator alarms when the primary flow rate is 850 gpm or less while the flapper valve is closed (the alarm is not actuated if the valve is open).

If the ΔP and ΔT instrument readouts have not changed from their initial equilibrium values, a malfunction of the flow-metering instrumentation may be expected. If the flow has actually decreased during normal operation, the possible causes might be:

(1) failure of the primary pump,

(2) an obstruction atop the core,

(3) a rupture in the primary water line, or

(4) failure of HCV-3 (a hand-controlled, air-operated valve on the exit water line).

If the flow rate continues to decrease, the reactor will be scrammed automatically at 750 gpm. Under any circumstances, it would not be advisable to continue operating the reactor in Mode 2 with this annunciator in the alarm condition.

j. Jet Off (D-10). This annunciator alarms when the ^{16}N dispersion jets are not in service while the flapper valve is open. If this annunciator alarms during normal operation, the most likely cause would be due to shutdown of the skimmer pump which supplies water to the jets. This pump should be restarted if operation above 100 kW is to continue.

k. Midrange Lockout (D-11). This annunciator alarms during reactor startup when the counting rate, as indicated on the count-rate recorder, becomes greater than 8000 counts/s before log-N confidence has been attained at 0.01% N_F on the log-N recorder. This alarm is normal during startups and will clear when the above conditions are satisfied.

l. Count-rate Period <7 s (D-12). This annunciator will alarm when the reactor period, as indicated by the count-rate-period recorder readout, decreases to 7 s.

If the power level is less than 20% N_F (400 kW), this alarm will be accompanied by a reverse and a subsequent loss of servo control.

The reactor supervisor should be notified of the situation if the log-N channel corroborated a positive 7-s period. It would appear that there was an unexplained addition of positive reactivity to the core. If the count-rate channel is determined to be unreliable, do not proceed with a startup unless log-N confidence has been obtained.

m. Reverse (D-13). This annunciator alarms if any of the following conditions develop:

(1) The power level, as indicated on the log-N recorder is 50% higher than the power-level-range setting on the micromicrometer and if a negative period of 100 s or faster does not occur within 1.5 s. The log-N recorder setpoints are at 30 W (0.0015% N_F), 300 W (0.015% N_F), 3 kW (0.15% N_F), 30 kW (1.5% N_F), and 300 kW (15% N_F).

(2) An experiment reverse setpoint is exceeded while the E-panel switch is in NORMAL and if a negative period of 100 s or faster does not occur within 4 s.

(3) Two level-safety channels are simultaneously inoperable.

(4) The reactor period, as indicated on the log-N period recorder, decreases to 7 s.

(5) The reactor period, as indicated on the count-rate-period recorder, decreases to 7 s while the reactor power level is below 20% N_F (400 kW) or while the fission chamber is not being inserted.

(6) Any of the level-safety channels increase to read $\geq$120%. NOTE: 120% corresponds to 1.2 MW when the flapper valve is open (due to an increase in the gain of the level-safety channels by a factor of 2) and 2.4 MW when the flapper valve is closed.

(7) If the power level, as indicated on the log-N recorder, is >20% N_F with the power range switch on the 2-MW setting and if "run" has not been obtained.

Whenever a reverse is initiated, the cause should be determined, understood, and corrected before attempting to start up the reactor.

n. Fast Scram (D-14). This annunciator alarms if a fast scram signal is initiated by any of the three level-safety channels (when the channels read 145) or by the log-N channel (when the reactor is on a positive 1-s period). The sigma amplifiers should be observed to note any "abnormal" lights. If there was only a malfunction (spike) in one of the safety channels and not a real increase in power, the shift supervisor may

elect to turn the affected safety recorder off and disconnect that channel from the sigma bus. (NOTE: Failure of a second level-safety channel will initiate a reverse.)

3. Process annunciators. This third group of annunciators is located on control-room panel G and appears as indicated in Fig. 2.7. Refer to Fig. 2.3 for remote annunciator locations.

G-1	G-2	G-3	G-4	G-5	G-6	G-7
Sec Coolant pH Hi	Tower Basin Lo Temp	Tower Basin Hi Temp	Log Gamma Radiation High	Decay Tank Hi/Lo Level	Decay Tank Hi Radiation	PCA Room Hi Temp

G-8	G-9	G-10	G-11	G-12	G-13	G-14
Resistivity Lo	XXX	Secondary Coolant Lo Flow	Primary Inlet Hi Temp	Pool Outlet Hi Radiation	Reactor Core Hi ΔT	Cell Vent Low Flow

Fig. 2.7. Annunciator center panel (local).

a. Secondary Coolant pH Hi-Lo (G-1). This annunciator alarms if the pH of the secondary water, as indicated on the recorder, is not within the prescribed range. This pH range will normally be 7.0 to 7.5 but may be

varied from time to time for special tests. (The pH probe is located in BSR pump house just north of the primary pump.)

If this annunciator alarms, it would indicate that adjustment of the pH control system is necessary. (This condition should be verified using the bench instrument.) If adjustments are found to be necessary, the acid-addition system should be checked; also, check the acid supply (by visual inspection of the supply tank).

b. Tower Basin Lo Temp (G-2). This annunciator alarms when the temperature of the water in the tower basin decreases to 65°F. This alarm may occur frequently during the winter months if the reactor is not operated continuously.

c. Tower Basin Hi Temp (G-3). This annunciator alarms if the temperature of the water in the tower basin increases to 89°F. This alarm may be initiated if the reactor is operating and the fans fail to operate as designed. In this event, the condition of the local electrical breakers and control switches should be checked. If resetting the control breakers and switches fails to correct the condition, notify the shift electrician. In all probability, the condition can be corrected before it would be necessary to cool the basin water by other means (for example, by replacing the process water).

d. Log Gamma Radiation High (G-4). This annunciator alarms if the radiation level increases to 5 R/h at the log gamma radiation monitor outside the control room (east wall).

e. Decay Tank Hi/Lo Level (G-5). This annunciator alarms if the water level in the decay tank increases to 160 in. or decreases to 80 in. This alarm will exist before the primary flow is established. (To lower the water level in the tank, lower the flow rate entering the decay tank by closing valve HCV-3. To raise the water level in the tank, increase the flow rate to the tank by opening valve HCV-3; HCV-3 is the hand-controlled air-operated valve on the exit line from the pool.)

   If this alarm occurs during reactor operation, check the status of the primary pumps, piping and associated equipment and observe the level-indicating gauge, the flow-rate indicator, the ΔP indicator, and the pool water level to help ascertain the cause of the alarm. If the alarm cannot be cleared by manipulating the valves as indicated above, inform the reactor supervisor of the condition. If a leak has developed in the primary-water system, the reactor should be shut down.

f. Decay Tank Hi Radiation (G-6). This annunciator alarms if the radiation level in the off-gas line

from the decay tank increases to the set point.* If this alarm occurs during normal operation, observe the readouts of the other radiation monitoring units for corroborating evidence that the condition was real and for the possible cause. If the condition is determined to be real, check to be sure that the valve to the off-gas system is open. (Remember: at least one radiation-monitoring unit for the primary-water system must be reliable to allow operation of the reactor.)

g. PCA Room Hi Temp (G-7). This annunciator alarms when the temperature in the PCA control room has increased to 90°F. If the PCA control room air conditioner cannot be restarted, the following PCA circuits should be shut off: L-1 (in the upper or "normal" power panel) and L-18 and L-22 (in the lower or "clean" power panel). NOTE: L-2, -4, -6, and -8 in the upper or "normal" power panel should always be shut off when the reactor is not attended.

h. Resistivity Lo (G-8). This annunciator alarms when the resistivity of the demineralized water decreases to about 300,000 ohm-cm. The sensing element is located in the exit line from the anion column.

---

*Variable set point, adjusted to approximately 2 times normal level.

If this alarm occurs during normal operation, verify the condition using the bench instrument. If low resistivity is confirmed, remove the demineralizer from service. (The demineralizer ion exchange columns should be regenerated as described in Section 6.1.9.)

i. Annunciator (G-9). This annunciator is presently not in use.

j. Secondary Coolant Lo Flow (G-10). This annunciator alarms when the flow rate of the secondary water system decreases to 300 gpm. The metering orifice is located on the exit line of the heat exchanger.

If this alarm occurs during normal operation, check the status of the secondary pump, the secondary-flow control valve, and the water valve in the tower-basin riser.

k. Primary Inlet Hi Temp (G-11). This annunciator alarms when the temperature of the water leaving the primary side of the heat exchanger increases to about 105°F. The sensing element is located at the heat exchanger.

If this alarm occurs during normal operation, check the following:

(1) the multipoint-recorder readouts (to verify an increase in temperature),

(2) the primary flow rate, and

(3) the condition of the secondary cooling system.

l. Pool Outlet Hi Radiation (G-12). This annunciator alarms when the radiation level of the water leaving the pool increases to a preset alarm point. The sensing element is located near the exit water line in the valve pit.

If this alarm occurs during normal operation, observe the readout of the other radiation-monitoring units for corroborative evidence and try to determine the cause. If the condition is determined to be real, the reactor should be shut down. (Remember, at least one radiation-monitoring unit for the primary-water system must be reliable to allow operation of the reactor.)

m. Reactor Core Hi ΔT (G-13). This annunciator alarms when the differential water temperature across the reactor core increases to 17°F. (For a description of the core ΔT monitoring system, see Section 3.2.2.1.)

When this alarm occurs, a setback is also initiated. The supervisor in charge should be notified immediately.

If this alarm occurs during normal operation, suspect a decrease in flow rate or a leak in the pool piping.

n. Cell Vent Low Flow (G-14). This annunciator alarms when the cell-ventilation flow decreases to 3025 cfm.

3. INSTRUMENTATION AND CONTROLS

3.1. Reactor Controls and Safety Systems

3.1.1. Introduction

The BSR controls consist, essentially, of fairly standard ORNL circuitry and instrumentation and the related hardware. These components serve to help the operator effect orderly operation of the reactor throughout startup, steady-state, and shutdown phases. The safety system, by contrast, serves to protect against the results of errors or malfunctions by monitoring the reactor period and power level separately and by providing scram signals should unsafe conditions be approached.

3.1.2. Nuclear-monitoring channels

The BSR nuclear instrumentation is comprised of standard ORNL instrument channels as described briefly in Table 3.1.

The electronics chassis used throughout the nuclear instrument channels are standard ORNL vacuum-tube types except for the magnet control instruments which are solid state devices mounted in NIM bins (Fig. 3.1).

3.1.3. The safety system

As the name implies, the safety system is intended to safeguard the reactor rather than to provide instrumentation primarily for operating the reactor; the safety system is in the "fast" scram instrumentation. (If the current to the electromagnets supporting the six rods is stopped or decreased sufficiently, the rods are dropped into the core. This is the quickest way that the reactor may be shut down - by scramming.)

Table 3.1. Instrument channels, details

Type Channel	No. of Channels	Range Covered	Type Chamber	Function
Count rate	1	Source level to N_F	Fission chamber	Start-up channel provides period interlocks for control circuit
Log-N	1	Log-N confidence to 300 N_L	Compensated ionization chamber	Intermediate channel provides period scram signal for safety system, and period interlocks for control circuit
Servo	1	Approximately 1 W (design) to 2 MW	Compensated ionization chamber	Automatic control of reactor power through limited movement of the regulating rod (selected shim rod)
Safety	3	1% N_F to N_F	Uncompensated ionization chamber	High-level scram channel (fast scram) recorder switches provide interlocks in the setback and reverse circuits

ORNL-PHOTO 0171-71

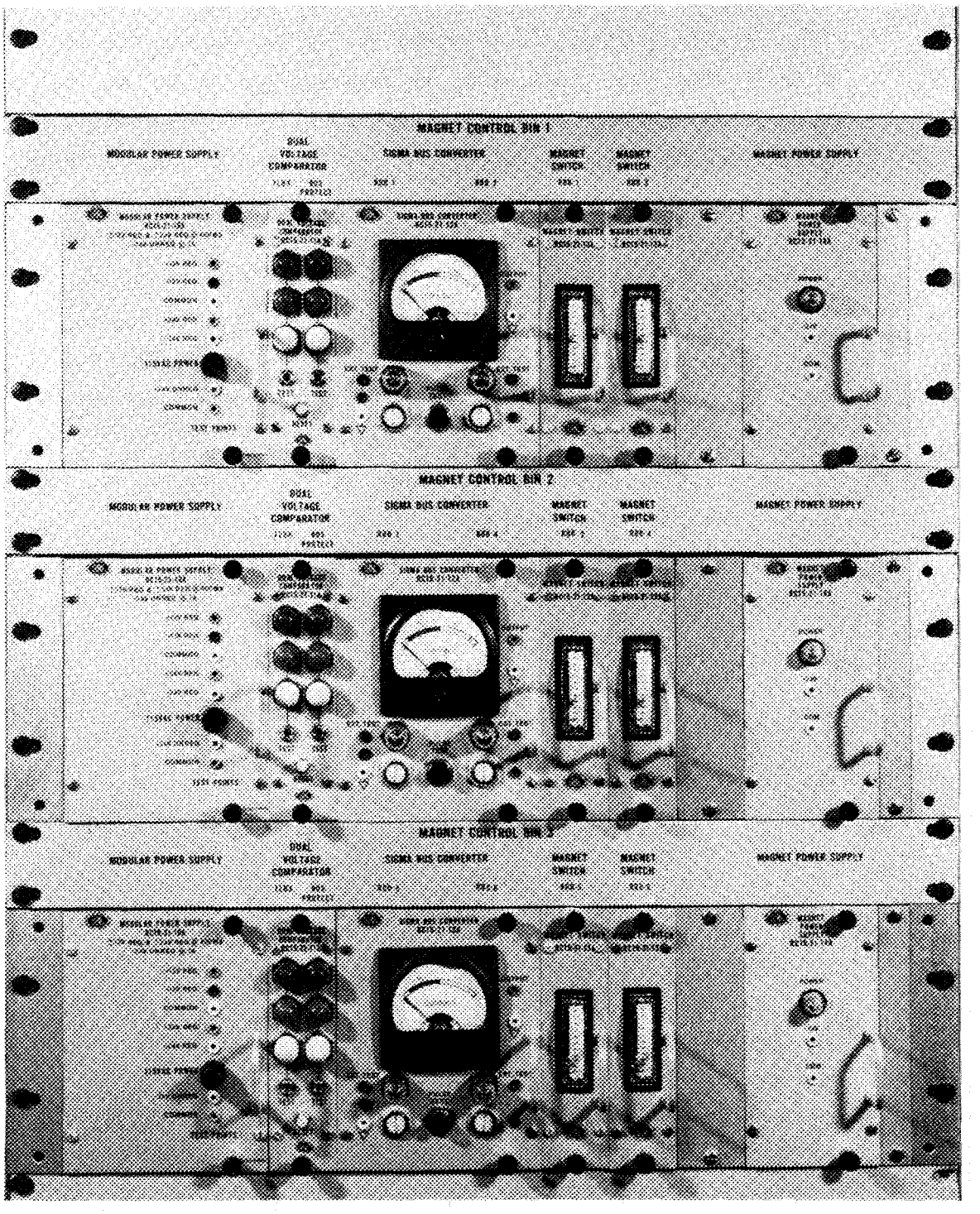

Fig. 3.1. Magnet control instrumentation.

The "fast" scram is so named because the signal from the safety-level channels and the period-safety channel is transmitted electronically to the magnet controls and is not subjected to time delays of electrical switches or relays (approximately 10 ms are required for "fast" scrams and approximately five times this value is required for "slow" scrams). Fast scrams are effected independently by each individual safety-level channel at a power level between 120 and 145% N_F or by the period-safety portion of the log-N channel if the reactor power level is increasing on a period of one second or less.

3.1.4. The control (or protective) system

Output signals from the nuclear-instrument channels also function within the control system which, as the name implies, serves to help control the reactor.

The functions and interactions of the control-system circuits cannot be described completely in narrative form. Therefore, to obtain a detailed understanding of the control system the following reference drawings should be studied:

No.	Title
RC 15-1-4A	Elementary Diagram - Sheet 1 of 5
RC 15-1-4B	Elementary Diagram - Sheet 2 of 5
RC 15-1-4C	Elementary Diagram - Sheet 3
RC 15-1-4D	Elementary Diagram - Sheet 4
RC 15-1-4E	Elementary Diagram - Rods 5 & 6 - Sheet 5

However, to provide a quick reference, some of the important features of the control system of the BSR are presented in the following paragraphs.

Instrument start. Initially, the following conditions must exist: key switch ON, no "reverse" condition, all rods "clutched," reactor not in "run," no servo "insert error," no "log-N >setpoint" condition, count-rate meter in OPERATE, and fission-chamber drive in AUTOMATIC. When the "instrument start" switch is momentarily switched to the ON position, an instrument-start request is obtained. This will initiate insertion of the fission chamber to obtain a counting rate of 20 counts/s and will place the reactor under servo control; the regulating rod will then be withdrawn to its upper limit since the reactor power is below the servo-demand setpoint. This establishes the "instrument start" condition. All shim-safety rods will begin withdrawing at full speed until a 25-s positive period is detected by the counting channel (or log-N channel), at which time withdrawal will be inhibited.

Since the early 25-s periods are usually transient (caused by a change in subcritical multiplication during rod movement), they will usually increase to greater than 25 s and rod withdrawal will resume. The process is repeated with ever-decreasing withdraw and ever-increasing withdraw-inhibit intervals until a stable positive period of about 25 s is established. The power rise will usually continue until a power level corresponding to 8000 count/s on the count-rate meter is achieved. At that level two events occur. One, the fission chamber will begin to withdraw until it detects a counting rate of less than 100 counts/s; two, the control system is placed in the "midrange lockout" condition which prevents rod withdrawal in the INSTRUMENT START mode. None of these changes alter the control-rod positions; so the reactor power level will continue to increase on a 25-s period until, at 0.01% N_F, log-N confidence is obtained, the

"midrange lockout" is cleared, the period becomes longer than 25 s (as determined by both the count rate and the log-N period channel), and all rods will withdraw again as required to re-establish a 25-s period. Finally, INSTRUMENT START is terminated when the servo senses an insert error or when RUN is obtained. (INSTRUMENT START is also terminated instantly if a reverse occurs or if a rod drops.)

Automatic positioning of the fission chamber. Automatic fission chamber positioning is an essential part of the INSTRUMENT START mode. In its automatic mode, the control system repositions the fission chamber as needed to keep the count-rate channel within its operating range. If INSTRUMENT START is requested, the chamber will be inserted (if a positive 25-s period is not detected) when automatic positioning is selected until at least 20 counts/s are detected. If a counting rate of 8000 counts/s is detected and if automatic positioning is selected, the chamber is withdrawn until less than 100 counts/s are detected. Insertion of the chamber may be manually initiated, even if the automatic mode is selected, provided that a positive period <25 s does not exist; manual withdrawal is blocked when the reactor is in the INSTRUMENT START mode until log-N confidence is obtained. Following a reactor shutdown, the chamber will be inserted by the automatic positioning circuit to maintain a counting rate of at least 2 counts/s.

Raise-clutch mode. The RAISE-CLUTCH mode permits the shim-safety rod drives to be withdrawn for maintenance purposes without withdrawing the shim-safety poison rods. When the master "raise-clutch" mode switch is put in the RAISE-MODE position, a slow scram is initiated. When individual rod-drive "raise-mode" switches are placed in the RAISE position, the drives will withdraw without moving the poison

rods. If any poison rod is lifted from its seat, withdrawal of that rod drive is immediately stopped.

Servo control. With the SERVO-ON condition, a restricted portion of the No. 4 rod is controlled by the servo system and is withdrawn and inserted as needed to reach and maintain the desired reactor power level. The SERVO-ON condition should be obtained whenever the INSTRUMENT-START-REQUEST condition is obtained. This system must be on and must withdraw the regulating rod to its upper limit before the INSTRUMENT START mode can be established. It cannot thereafter be turned off without first going out of INSTRUMENT START.

When the servo system is stated to be on, it is implied that the programmable controller is allowed to control a portion of the No. 4 rod as restricted by the regulating rod limit switches - to be worth less than 0.5% $\Delta k/k$ - and as restricted by the control system. Normally, the servo amplifier is always on or operating; but, when the control system is in MANUAL, the programmable controller is not allowed to control the reactor. The servo could fail in such a way that after withdrawing the regulating rod and placing the reactor on a positive period the power level could continue to increase beyond the servo-demand setpoint. If the operator does not discover this and take corrective action, this action will be performed by the control system with a reverse. The servo is turned off by the reverse and can be turned back on only by the operator.

The conditions necessary to obtain servo control are as follows: "key" switch ON, no reverse, all rods clutched, and the regulating rod above the lower limit and below the upper limit. If these conditions exist, servo control may be initiated by temporarily turning the

"servo" switch to the ON position or by the instrument-start-request circuit.

Run. During a reactor startup, if RUN has not been obtained, the reactor power will be reversed when a level of 400 kW (20% N_F), as determined by the log-N channel, is reached. To obtain RUN, the following conditions must be satisfied: power-range selector on the 2-MW range; servo demand at 5% (the combination of these first two conditions results in a servo-demand setpoint of 5% N_F or 100 kW); positive period greater than 100 s; the log-N recorder readout >1.5% N_F and <10% N_F; and either the reactor must be in MANUAL or a WITHDRAW ERROR must no longer exist. If the conditions are satisfied, RUN is obtained automatically, and the power level may be raised above 100 kW.

If the reactor is to be maintained in the RUN mode, two of the above conditions must continue to exist. First, the power range selector must remain on the 2-MW range. Second, the power level as determined by the log-N recorder must be maintained >0.5% N_F.

Key Switch. The key switch is an aid to administration and is used to prevent unauthorized manipulation of rod drives. When the switch is off, the reactor is scrammed and withdraw-circuit control power is disconnected. However, rod insertion circuits are not turned off. The switch can be turned on only when the key is in its lock, and, further, the key cannot be removed until the switch is turned off. (The key is maintained in a locked key box when the switch is in the OFF position.)

Setback. This circuit is devised so that the actuation of instrument switches will result in lowering the demand setting (setpoint) of the automatic control system. This action continues

until the cause is removed or until certain low-power interlocks are actuated. Under these (setback) conditions, the control system will attempt to maintain the nuclear power equal to the setpoint. Manual setback can also be effected by turning the "demand" switch to the LOWER position (the remote "demand" switch is activated when REMOTE operation is selected; see Section 2.4.4 for additional information).

Reverse. Completion of the reverse circuit results in simultaneous insertion of all the shim-control rods through rod-drive-motor action. Automatic control of the reactor is discontinued when the reverse occurs (see Section 2.4.4 for further comments regarding the reverse circuit).

Slow Scram. In this action, electrical circuits, employing relays and other electrical or mechanical devices, cause a loss of current to the electromagnets supporting the shim-control rods. Time response of the system is approximately 250 ms. The complete insertion of all the shim-control rods should occur instantaneously (see Section 2.4.4 for additional information).

Fast Scram. This circuit with a time response of <10 ms employs electronic devices to vary the sigma bus voltage directly as the nuclear power increases or as the rate of power rise increases. Sigma bus voltage is, in turn, converted to a lower voltage which is fed to bi-stable switches which switch off the shim-rod magnet current at the scram level or when the rate of power increase is too great. Thus, the shim-control rods are dropped immediately when unsafe conditions occur.

3.2. Process Instrumentation

3.2.1. Introduction

The process instrumentation monitors the status of the reactor primary water system, secondary water system, building ventilation system, and off-gas system. Some of the output signals from this instrumentation function in the reactor control system; these signals are associated with the reactor primary water system (low flow rate, low differential pressure across the core, high differential pressure across the core, low water level in the pool, and flapper valve in improper position). The remaining output signals operate annunciators, recorders, or indicators.

3.2.2. Primary-water-system instrumentation

Flow-rate instrumentation. The rate of flow of the primary water to the decay tank is monitored just upstream of the decay tank by FE-10 which is a 1/8-in.-thick orifice plate with a 6.1086-in.-diam bore. The primary flow transmitter, FT-10, transmits an electrical signal to an ECI* recorder, FR-10, and associated instrumentation in the reactor control room. When the reactor is operating in Mode 2 (i.e., with the flapper valve closed), the associated instrumentation will initiate an alarm if the flow rate decreases to 850 gpm or less and will initiate a scram if the flow rate decreases to

---

*Foxboro Electronic Control Instrumentation

750 gpm or less. In addition, a pneumatic flow transmitter, FT-10A transmits flow information to an indicating gauge, FI-10A, at the pump house.

Differential-pressure instrumentation. The differential pressure across the core is monitored by a system which detects the differences between the static head in the pool at the elevation of the plenum and the static head in the plenum itself. (The difference which represents the dynamic head loss across the core is transmitted from PdT-22 to an ECI recorder, PdR-22, and associated instrumentation in the control room.) When the reactor is operating in Mode 1 (with flapper valve open), the sensitivity of the No. 3 safety channel is increased by a factor of 2. When the reactor is operating in Mode 2 (with the flapper valve closed), the associated instrumentation will initiate an alarm if the core ΔP decreases to a core ΔP corresponding to a primary flow of $\leq$850 gpm and a scram if the indicated flow decreases to $\leq$750 gpm.

Flapper-valve-position switches. The position of the flapper valve is monitored by switches which are installed at the top of the flapper-valve actuator arm. If the valve is fully open, this condition is sensed by LS-17 and LS-18 and is transmitted to the control room. With the flapper valve fully open, interlocks prevent starting the primary pump and increases the sensitivity of the Nos. 1 and 2 safety channels by a factor of 2. If the valve is fully closed, this condition is sensed by LS-19 and LS-20 and is transmitted to the control room. (In addition to the other functions of these switches, they will initiate a slow scram if the flapper valve is not fully open or fully closed.)

Differential-temperature instrumentation. The differential temperature across the core during Mode 2 operation (flapper closed and forced cooling flow) is monitored by a matched set of resistance-bulb thermometers: one, TdE-17A, in the exit water line and one, TdE-17B, in an insulated line which extends from a manifold located just above the top of the core to the exit water line. (The manifold and the insulated line are sized so that the transit time of the water is essentially the same as that for the water going to the exit temperature-sensor bulb via the core.) The output of the thermometers is transmitted to TdM-17 which generates the differential temperature signal; this signal is in turn transmitted to an ECI recorder, TdR-17, and associated instrumentation in the control room. This instrumentation will initiate an alarm and a setback if the differential temperature increases to 17°F. (This setback is not bypassed electrically in Mode 1; however, the sensors are bypassed by the route of the cooling flow.)

Pool-outlet radiation instrumentation. Two ORNL model Q-3006 beta-gamma monitors, along with their associated GM probes, are used to monitor the radiation levels near the pool exit water line in the valve pit at the southeast corner of the pool. One of the probes is located approximately 2 ft above the pipe and is therefore above the lead shielding which covers the line. The second probe is approximately 1 ft below the line but is located in a slotted lead shield which reduces the effects of scatter. This lower probe, however, "sees" radiation coming directly from the exit line.

The monitor connected to the lower probe indicates a radiation level of approximately 600 mr/h when the reactor is operating at a power level of 2 MW, while the upper monitor indicates approximately 60 mr/h. Since each monitor covers a range of 0-1000 mr/h, meaningful readout from the radiation instrumentation is ensured to radiation levels corresponding to a reactor power level a factor of 16 above normal.

Either monitor will initiate an alarm at approximately 1.5 times its 2-MW output.

Decay-tank-level instrumentation. The water level in the decay tank is monitored by a bubble-type level sensor and the output signal is transmitted to an indicating gauge, LI-4A, and to pressure switches in the control room. An alarm will be initiated (by LS-4A) if the water level increases to 160-in. H_2O or (by LS-4B) if the water level decreases to 80 in. H_2O. (With the primary flow system shutdown, the normal water-level indication will be >300 in. H_2O.)

Reactor inlet-temperature instrumentation. The reactor inlet-temperature sensor, TE-16-1, a 1/16-in.-diam stainless steel sheathed Chromel-Alumel thermocouple, is supported in a 1/4-in.-OD aluminum tube which extends from the pool surface to just above the top of the core. The lower end of the support tube is inclined at a 45° angle with respect to the horizontal; also, in the lower end four rows of 1/8-in.-diam holes were drilled to allow the water to contact the sheath of the thermocouple. This sensor transmits temperature information to the miscellaneous temperature recorder (TR-16) as point TR-16-1.

Reactor outlet-temperature instrumentation. The reactor outlet-temperature sensor, TE-16-2, a 1/16-in.-diam stainless steel sheathed Chromel-Alumel thermocouple, is supported in a 1/4-in.-OD aluminum tube which extends from the pool surface to the top portion of the reactor outlet water line just downstream from the reactor outlet plenum. This sensor transmits temperature information to the miscellaneous temperature recorder (TR-16) as point TR-16-2.

Pool inlet-temperature instrumentation. The pool-inlet temperature is monitored at the exit of the heat exchanger by a Chromel-Alumel thermocouple, TE-13. This thermocouple is connected to an ECI recorder, TR-13, and to an ECI controller, TE-13, via a temperature transmitter, TT-13, and to associated instrumentation. The associated instrumentation indicates an alarm if the pool inlet temperature increases to 105°F. The recorder-controller, by repositioning the secondary-cooling-flow throttle valve, TCV-13, maintains the pool-inlet temperature at the desired temperatures (see Section 3.2.3 for details of this control system).

Heat-exchanger inlet temperature and heat-exchanger outlet temperature instrumentation. The heat-exchanger primary-inlet and the heat-exchanger primary-outlet temperatures are monitored by Chromel-Alumel thermocouples TE-16-5 and TE-16-6, respectively. These sensors transmit temperature information to the miscellaneous temperature recorder (TR-16) as points TR-16-5 and TR-16-6, respectively.

Miscellaneous temperature instrumentation. Three points on the miscellaneous temperature recorder (TR-16) are used to indicate the temperature of miscellaneous items as shown in Table 3.2.

Table 3.2. Temperature instrumentation for miscellaneous items

Item	Thermocouple	Recorder point
Normal off-gas line	TE 16-4A	TR 16-4
Normal off-gas surge tank	TE 16-3A	TR 16-3
Degasser tank	TE 16-10A	TR 16-10

Pool-water-temperature instrumentation. Six thermocouples are installed on the south side of the dam jamb on the east side of the reactor pool as shown in Table 3.3.

Table 3.3. Pool water temperature instrumentation

Elevation above pool floor (ft)	Thermocouple	Recorder point
1	TE 16-4	None
4	TE 16-3	None
7	TE 16-12	TR 16-12
10	TE 16-11	TR 16-11
13	TE 16-10	None
16	TE 16-9	TR 16-9

Primary-cooling-pump-inhibit circuit. Valve HCV-54, which is located at the discharge of the primary side of the heat exchanger, is used as a throttling valve when establishing primary water flow. A switch, HS-54, which is installed on the housing of this valve functions in the primary-cooling-pump start circuit; the pump cannot be started unless HCV-54 is fully closed.

3.2.3. Secondary-water-system instrumentation

Flow-rate instrumentation. The rate of flow of the secondary water to the cooling tower is monitored just downstream from the heat exchanger by FE-11, which is a 1/8-in.-thick orifice plate with a 6.3343-in.-diam bore. The secondary flow transmitter, FT-11, transmits a pneumatic signal to flow-indicator FI-11 at the pump house and to FR-11, TR-15 (a two pin, Foxboro pneumatic control recorder) located in the control room. An associated pressure switch, FS-11A, will sound an annunciator if the flow decreases to <300 gpm. The flow rate is controlled by the position of the throttling valve, TCV-13; the position of this valve is adjusted by the pool-inlet-temperature controller, TC-13.

In addition, the secondary flow rate is the parameter which is used to control operation of the cooling tower fans. The sequence of operation of this system is indicated in Table 3.4.

Table 3.4. Fan speed control

Switch*	Change of flow rate	Fan speed
FS-11F	Increase to 1200 gpm	South in low
FS-11D	Increase to 1250 gpm	North in low
FS-11E	Increase to 1400 gpm	South in high
FS-11C	Increase to 1450 gpm	North in high
FS-11C	Decrease to 1250 gpm	North in low
FS-11E	Decrease to 1200 gpm	South in low
FS-11D	Decrease to 1050 gpm	North off
FS-11F	Decrease to 1000 gpm	South off

*These are differential-type pressure switches with an adjustable low-pressure setpoint and with an adjustable span which is used to determine the high-pressure setpoint.

If only one fan is selected for use or if only one fan is available for use, the above switch setpoints and fan action will apply for that fan. (The fan selector switch at the pump house has three positions: BOTH, SOUTH, or NORTH.)

Tower basin temperature. The temperature of the basin water is monitored by a gas-filled bulb, TE-15. This 1/2-in.-OD and 16-ft-long unit is housed in a 16-ft-long, 1-in. (schedule 10) stainless steel pipe which is penetrated by four rows of 1/4-in.-diam holes. The pipe extends from the top of the southeast corner of the basin sump to the bottom of the northeast corner of the sump. The temperature transmitter, TT-15, which is adjacent to the top of the pipe, transmits a pneumatic signal to temperature indicator TI-15 located in the pump house and to FR-11, TR-15 (a two-pen recorder) located in the control room. Two associated pressure switches, TS-15A and TS-15B, sound annunciators if the temperature increases to 89°F or if the temperature decreases to 60°F, respectively.

pH instrumentation. The pH probe (ApHE-14) is located at the BSR pump house. Water is supplied to the probe from the discharge of the air-conditioning pump; after passing over the probe, the water is sent to the storm drain. The probe transmits an electrical signal to the pH amplifier-indicator (ApHT) which in turn transmits an electrical signal to the recorder-controller (ApHR-14, ApHC-14) in the control room. The controller transmits a variable current signal to the motor controller, ApHCO-14, located at the pump house. The motor controller transmits a proportional voltage signal to the motor of the minipump, which feeds acid to the cooling tower basin. An adjustable alarm contact on the recorder (ApH R-14) will sound an annunciator if the pH is not within the prescribed range, 7.0 to 7.5.

Tower-fan-speed indicators. Indicator lights in the control room display the speed of either or both cooling tower fans as follows: SI-15A is illuminated if the north fan is in high-speed operation; SI-15B is illuminated if the south fan is in high-speed operation; SI-15C is illuminated if the north fan is in low-speed operation; and SI-15D is illuminated if the south fan is in low-speed operation.

Heat-exchanger inlet temperature and heat-exchanger outlet temperature instrumentation. The heat-exchanger secondary-inlet and the heat-exchanger secondary-outlet temperatures are monitored by Chromel-Alumel thermocouples TE-16-7 and TE-16-8, respectively. These sensors transmit temperature information to the miscellaneous temperature recorder (TR-16) as points TR-16-7 and TR-16-8, respectively.

3.2.4. Building-ventilation system

The building ventilation system is equipped with a radiation monitor located in the exit duct. The only automatic control action associated with this instrumentation is that the building is placed in the containment mode if the duct monitor senses a radiation level of 10 mr/h or higher. (Refer to Sections 7.2.4 and 10.1 for details of the building-ventilation system; this system is more commonly referred to as the cell-ventilation system.)

3.2.5. Normal off-gas system

The instrumentation indicating the status of the normal off-gas system at the BSR consists of a differential pressure transmitter (connected to the off-gas surge tank) which transmits a pneumatic signal to a vacuum gauge mounted in the vertical control room panel (see Section 7.2.3 for details of the normal off-gas system).

3.3. The Local Console

Figure 3.2 illustrates the local BSR control room. All the controls and indicating instruments are labeled to facilitate complete comprehension of the operating procedures.

3.3.1. Left-hand side of console

The left-hand side of the console has the following switches and readouts (excluding the recorders and annunciators):

1. Above the synchro position indicators for control rods 1, 2, 3, and 4, the following information is displayed by lighted indicators:
   a. "LL" when the rod drive is at its lower limit of travel.
   b. "S" when the rod is fully inserted into the core, i.e., at seat.
   c. "C" when the magnet and armature are not engaged, i.e., not clutched.
   d. "UL" when the rod drive is at its upper limit of travel.
2. Below each synchro position indicator, a toggle-type electrical switch is located. When in the UP position, individual rod withdrawal is requested. When in the DOWN position, individual rod insertion is requested.
3. Below the "insert and withdraw" switch for the No. 1 control rod, the red building-evacuation button and the green horn-silence button are located. (The functions of these switches are described in Section 3.5.)

ORNL-PHOTO 0840-71

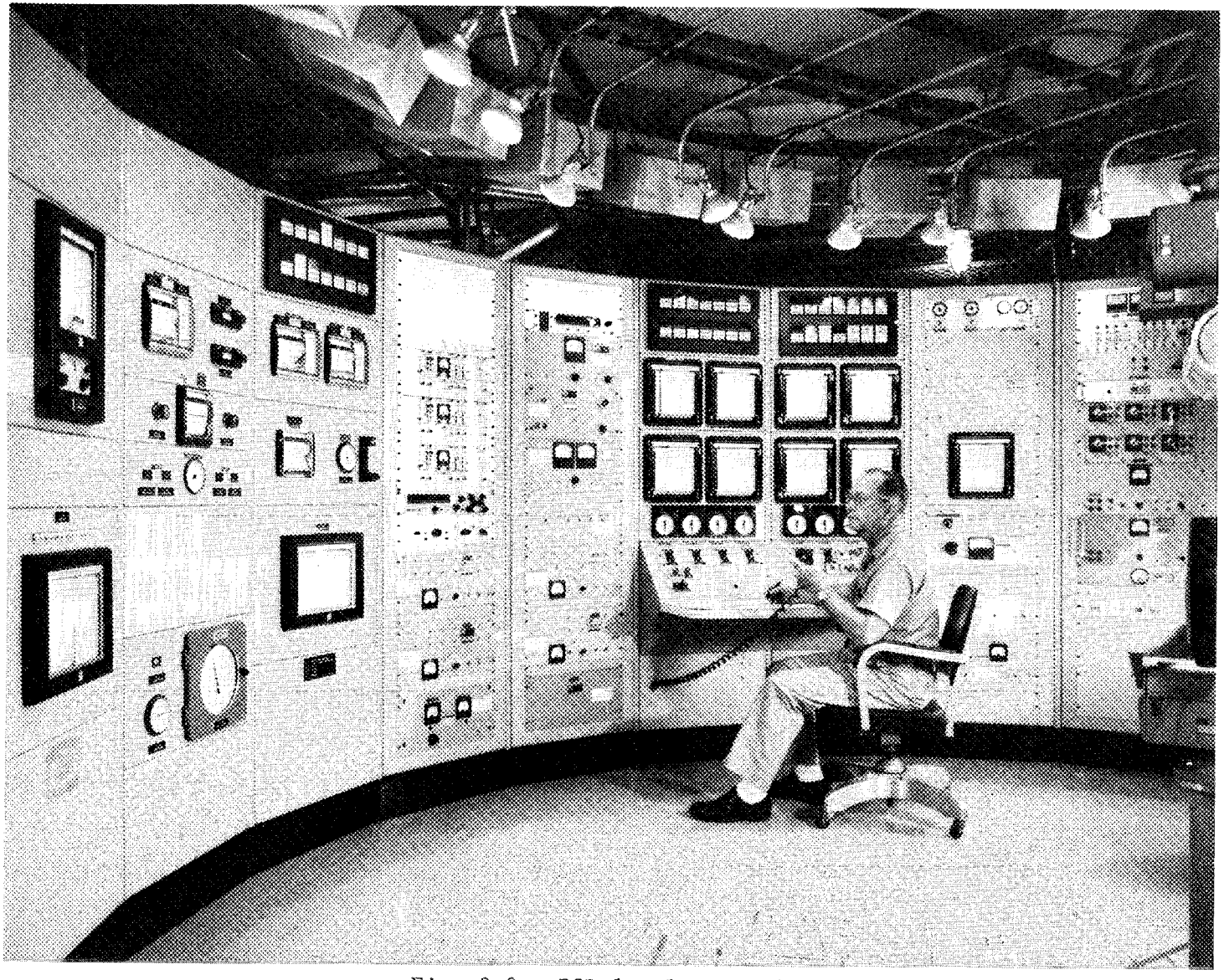

Fig. 3.2. BSR local control.

4. Below the building-evacuation button, the annunciator "acknowledge reset" switch, a toggle-type electrical switch, is located (see Section 2.4.2 for a description of the functions of this switch).
5. Under the metal door, seven toggle-type electrical switches are located. The switch on the right is the master "raise-clutch" switch. The six switches on the left are the individual "rod-drive" and "raise-clutch" switches. (The function of these switches is described in Section 3.1.4.) Normally, the six "rod-drive" switches are in the CENTER position and the master "raise-clutch" switch is in the RUN position.

3.3.2. Right-hand side of console

The right-hand side of the console has the following switches and readouts (excluding the recorders and annunciators):

1. Synchro position indicators; "LL," "S," "C," and "UL" indicators; and "insert and withdraw" switches for control rods 5 and 6.
2. A selsyn indicator showing the position of the fission chamber (0 to 50 in. of travel) and "LL" and "UL" indicators. The manual control for the fission-chamber-positioning mechanism is a toggle-type electrical switch located below the selsyn indicator. When the switch is in the UP position, fission-chamber withdrawal is requested; when the switch is in the DOWN position, fission-chamber insertion is requested.

3. The control for the demand (local vernier) is a toggle-type electrical switch located below the slow scram reset. When the switch is in the UP position, raising of the demand is requested; when it is in the DOWN position, lowering of the demand is requested.
4. There are nine indicator-light and/or switch panels on the right-hand side of the console. They appear as shown below and their functions are as indicated.
   a. The switch in the center of the panel allows one to select rod 1, 2, or 3 as the preferred rod (see Fig. 3.3).

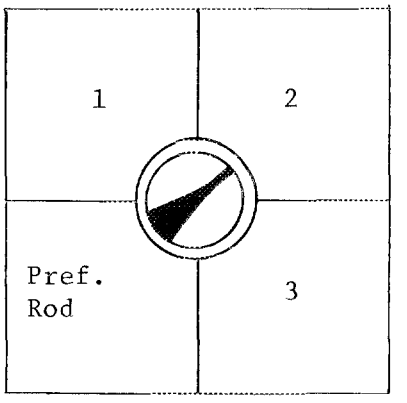

Fig. 3.3.

   b. The switch in the center of the panel allows one to select manual or automatic control of the fission-chamber drive (see Fig. 3.4).

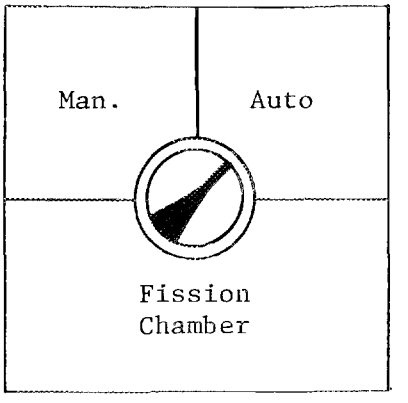

Fig. 3.4.

c. If the top section brightens, the conditions required to withdraw rods are satisfied. If the lower left section brightens, the regulating rod is at its lower limit (1% of travel). If the lower right section brightens, the regulating rod is at its upper limit (99% of travel) (see Fig. 3.5).

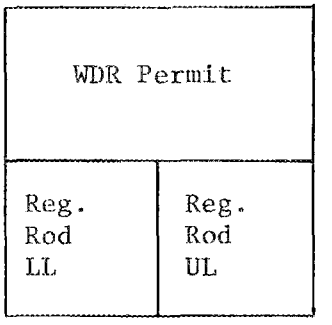

Fig. 3.5.

d. The switch in the center of the panel is the "group-actuate" switch. When the switch is held in the clockwise position, group withdraw of all rods is requested. When the switch is placed in the counterclockwise position, group insertion of all rods is requested. HOLD is the neutral position (see Fig. 3.6).

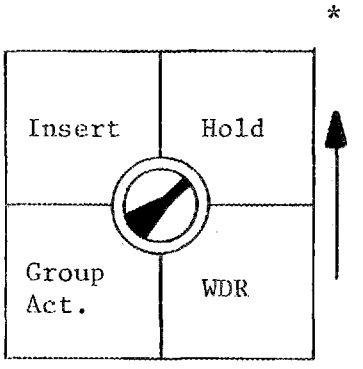

Fig. 3.6.

*The arrows indicate the direction of spring action.

e. The switch in the center of the panel is the "servo-selector" switch. When the switch is turned clockwise, servo is obtained (assuming other conditions listed in Section 3.1.4 are satisfied), and the ON section will brighten. Unless the reactor is in INSTRUMENT START when the switch is turned counter-clockwise, servo is no longer requested and the OFF section brightens. HOLD is the neutral position (see Fig. 3.7).

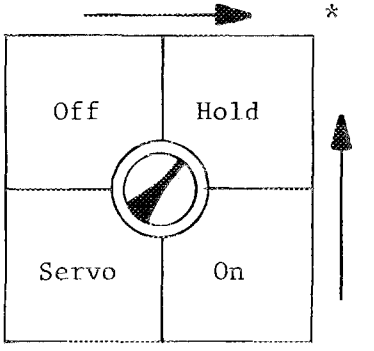

Fig. 3.7.

f. The switch in the center of the panel is the "instrument-start" selector switch. When the switch is turned clockwise, instrument-start request is obtained (assuming other conditions listed in Section 3.1.4 are satisfied). Once INSTRUMENT START is obtained, the ON section will brighten. When the switch is turned counterclockwise, instrument-start is no longer requested and the OFF section brightens. HOLD is the neutral position (see Fig. 3.8).

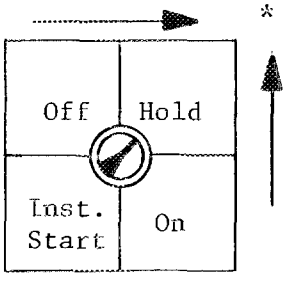

Fig. 3.8.

*The arrows indicate the direction of spring action.

g. The top section of this panel brightens when RUN is obtained; the bottom section brightens when the conditions for RUN are not satisfied (see Fig. 3.9).

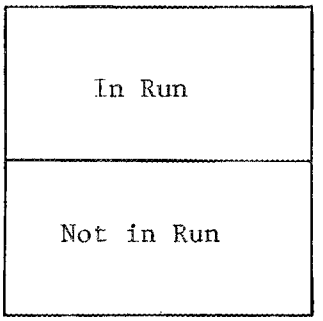

Fig. 3.9.

h. The top section of this panel brightens when the key switch is in the ON position. The lower left section of this panel brightens when the flapper-valve is fully closed (see Fig. 3.10).

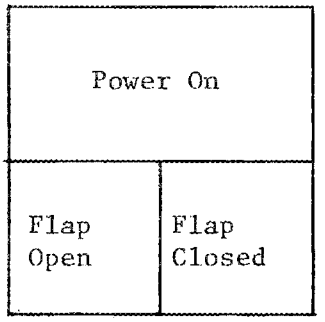

Fig. 3.10.

i. The upper left section of this panel brightens if the reactor is scrammed by the "make-up" scram circuit. The upper right section of this panel brightens if the reactor is scrammed by the "drop-out" scram circuit.
The lower section is always brightened and simply identifies the switch in the center of the panel. This switch must be depressed to reset the slow scram circuits (see Fig. 3.11).

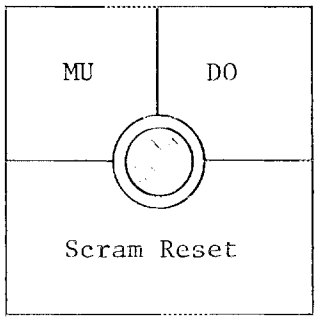

Fig. 3.11.

6. There are two other switches on the right-hand side of the console.
   a. Key switch. Only with the key switch in the ON position is electrical power supplied to the reactor startup control circuits. In the OFF position, the electrical power to the startup control circuits is off; the electrical power to the magnet bin Nos. 1, 2, and 3 magnet switches is turned off, and the remote mode allows only annunciator usage.
   b. Scram button. Depressing the large, red-colored button on the console will initiate a slow scram.

7. The following switches are located on panel B:

   a. The "power-range" selector dial. Seven positions are indicated (2 W*, 20 W, 200 W, 2 kW, 20 kW, 200 kW, and 2 MW); see Fig. 3.12.

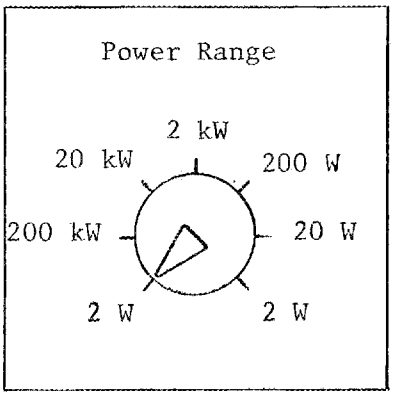

Fig. 3.12.

   b. The local/remote control switch is located above the "power-range" selector dial. When this switch is turned clockwise, remote operation is selected. When this switch is turned counter-clockwise, local operation is selected. This switch is spring actuated to return to the neutral (or HOLD) position.

---

*Although this position is indicated, it is not available for use.

3.4. The Remote Console

The instrumentation allowing remote control of the BSR is located on the right of the ORR console (see Fig. 3.13).

3.4.1. Left-hand side of panel

1. Three emergency-control buttons are located in the upper left-hand corner of the panel.
   a. The red-colored button will actuate the gas-operated evacuation horn at the BSR.
   b. The green-colored button will silence the horn as long as the button is depressed.
   c. The black-colored button will place the BSR building in containment.

   NOTE: These switches are effective at all times.*

---

*Except for those switches indicated here, all remote-console switches are only effective when remote operation is selected.

ORNL-PHOTO 4270-82

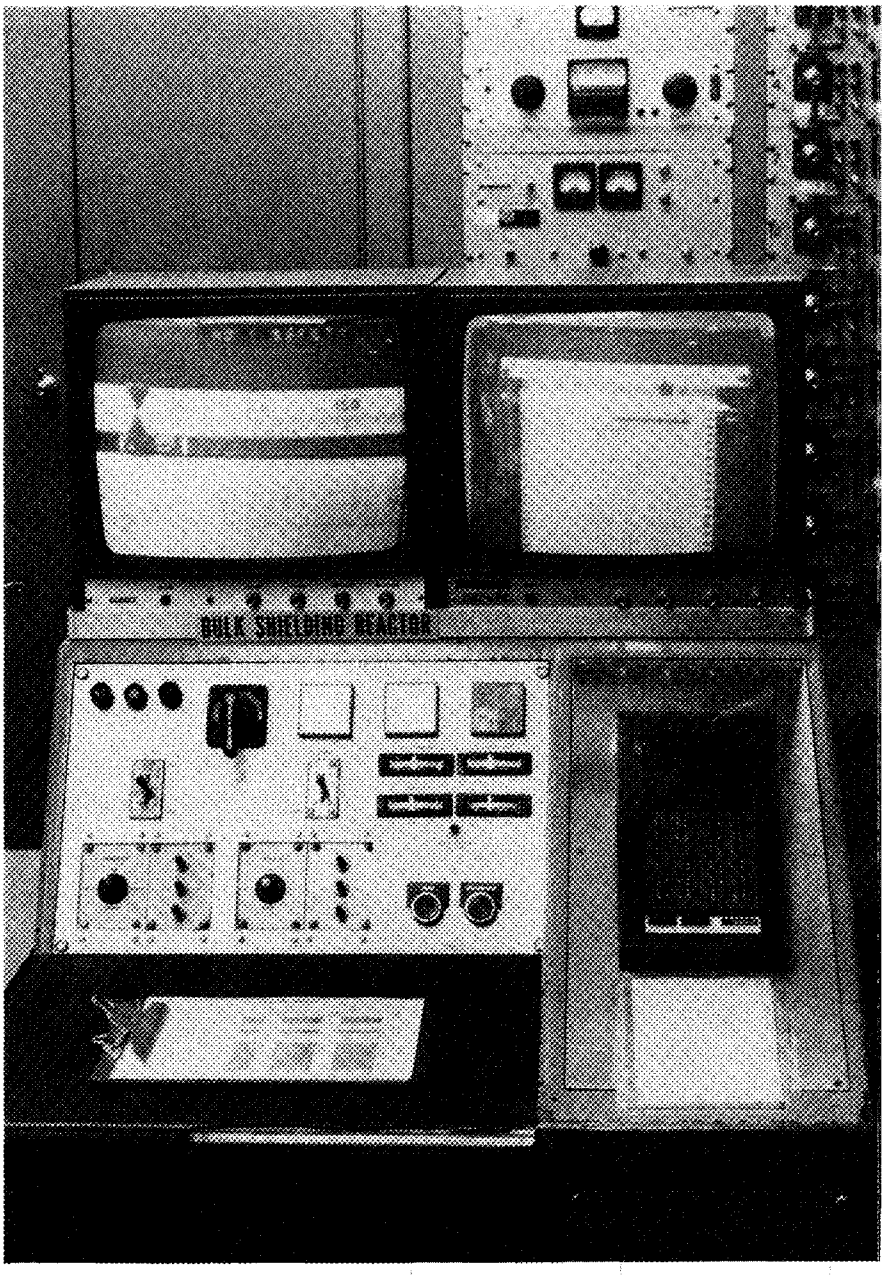

Fig. 3.13. BSR remote control console.

3.4.2. Upper right-hand side of panel

1. Two indicator-light panels are located in the upper right-hand corner. If the section labeled 1, 2, 3, 4, 5, or 6 brightens, the respective rod is seated in the core. If the "pro" section brightens (on the bottom section of the right-hand annunciator), a process-system annunciator for the BSR is in the ALARM condition and has not been acknowledged. If the "nuc" section brightens, a nuclear-system annunciator in panel C or D at the BSR is in the ALARM condition and has not been acknowledged.
2. Four meters are located directly below the two indicator-light panels listed above.
   a. The top right-hand meter indicates the radiation level as determined by the "high bay log gamma monitor" (located west of the BSR local control room); the meter scale reads from 0.1 to 10^5 R/h.
   b. The top left-hand meter indicates the radiation level as determined by the "high-bay monitor" (located west of and above the BSR local control room). The meter scale reads from 0 to 125 mr/h.
   c. The lower left-hand meter (0- to 200-scale) indicates the reactor power level as shown by the No. 1 safety recorder.
   d. The lower right-hand meter position is not in use.
3. To the left of the two indicator-light panels listed above, a third indicator-light panel and a scram switch are located.

a. If the top section of the indicator-light panel, "reactor on" is brightened, no scram condition exists. If the "BSR" section is brightened, local control is selected; if the "ORR" section is brightened, remote control has been selected.

b. Turning the scram switch in either direction off the center position will scram the reactor. NOTE: This switch is effective at all times, i.e., in both local and remote modes.

4. To the left of these four meters, two toggle-type electrical switches are located.

   a. The right-hand switch is the lower demand adjustment switch.

   b. The left-hand switch allows manipulation of the preferred rod. In the UP position, rod withdrawal is requested; in the DOWN position, rod insertion is requested. (Preferred-rod withdrawal will not occur unless the reactor is under servo control and unless the regulating rod is above its midrange limit switch. Preferred-rod insertion is allowed until the seat switch or the lower limit switch for that rod is actuated even if the reactor is not in servo control.) This switch should be used to maintain the regulating-rod position between 10 to 90% of its range as indicated on the local regulating-rod recorder.

5. In the lower right-hand corner of the panel, the annunciator acknowledge and reset push buttons (push button-type electrical switches) are located. When the reactor is in remote operation, the functions of these switches are the same as that of the local BSR annunciator "acknowledge-reset" switches (see Section 2.4.2 for functions of these switches).
6. To the left of the acknowledge and reset push buttons are the controls for the high-bay and control-room television cameras. The controls are labeled sufficiently well to allow one to manipulate this monitoring system.
   a. When improved quality of the picture is desired, zoom the lens in fully; i.e., until the objects viewed are as large as possible. (To zoom the lens in, move the zoom switch to the far position; to zoom the lens out, move the zoom switch to the near position.) Adjust the lens focus for the sharpest picture of the desired object. Focus for that object will then remain while the lens is zoomed in or out. If focusing on an object at a different distance is desired, zoom the lens in fully and adjust the lens focus again.
   b. Operations Division personnel should not attempt to adjust any television-system controls except the following console controls: focus, iris, and

zoom; and receiver controls H hold (horizontal hold), V hold (vertical hold), and brightness. Adjustment of all other controls should be made by Instrumentation and Controls Division personnel. Abnormal conditions which Operations Division personnel may attempt to correct and the procedures to be followed are as follows:

(1) If the picture "rolls" vertically, the "V hold" control should be adjusted.

(2) If the picture seems to move across the tube or if the picture becomes a series of slanted lines, the "H hold" control should be adjusted.

(3) If neither of the adjustments listed above restores the picture, make no further adjustments and notify Instrumentation and Controls Division personnel.

(4) If the picture tube goes blank, adjust the "brightness" control until the picture tube is illuminated. If no picture is present, make no further adjustments and notify Instrumentation and Controls Division personnel. (NOTE: Once the picture disappears, it cannot be restored by the normal console controls; i.e., focus, iris, zoom, pan, and tilt. No attempt should be made to adjust these controls since this will probably

result in ruining the motors operated by these controls.)

c. During periods when the reactor is shutdown or is being operated locally, the iris should be kept sufficiently closed so that only a very faint, but legible, picture is displayed. (This will prolong the camera-tube life and will help prevent image burn.) At no time should the camera be left focused on any bright object for long periods of time. (This would result in the image being permanently impressed upon the face of the camera tube.)

d. During periods when the reactor is being operated remotely and when the vertical control panel is not being scanned, the camera should be zoomed out so that most of the nuclear-instrumentation recorders can be observed. (Of these recorders, the regulating-rod recorder is the least significant to watch constantly.) If, when the camera is zoomed in on an object, it is desired to view an object not immediately adjacent, zoom out until the second object is in view or until the maximum area is in view. Then move the camera to bring the second object to the center of the picture tube; finally, zoom in on the second object.

NOTE: If, during remote operation, only one of the two television channels is available and if that channel fails, the operator should immediately scram the reactor.

3.5. Radiation and Contamination Monitors

3.5.1. The facility radiation and contamination alarm system (FRCAS)[1]

The facility radiation and contamination alarm system, installed in the reactor facility, continuously and automatically monitors gamma radiation (by three gamma monitrons) and air contamination (by three beta-gamma monitors).

These instruments and other components in the network provide Health Physics monitoring information and sound local alarms when abnormal conditions occur, and indicate abnormal conditions on a central panel board in the control room. These local alarms also sound the local "RS&C System" annunciator; this is used to bring the situation to the attention of the remote-desk operator.

Operating personnel are first given warning when a "caution level" is detected by a radiation monitron or an air monitor. A second warning is given when a "high level" is detected.

The building evacuation and containment systems operate automatically when two or more radiation monitrons in the coincidence circuit detect a high level of radiation or when two or more air monitors detect a high level of air contamination.

Radiation, contamination, and instrument-failure signals from the local continuous air monitors and monitrons are collected and processed at the radiation warning panel in the

---

[1]J. A. Russell, Jr., and D. J. Knowles, Description of Facility Radiation and Contamination Alarm Systems Installed in the Bulk Shielding Facility, Building 3010, ORNL-TM-1874, (August 22, 1967).

control room. It is intended that the reactor operator monitor the radiation warning panel and report promptly to local representatives of the Industrial Safety and Applied Health Physics Division any abnormal condition that appears. The Health Physics personnel are responsible for determining the extent of any radiation or contamination hazard, according to their procedures, and for establishing suitable safeguards. They are also responsible for maintaining the system and for all operations on, and routine surveillance of, the local continuous air monitors and monitrons.

In monitoring the radiation warning panel, the reactor operator is concerned with the following features:

Indicator modules. Alarm lights, normally glowing dimly, become bright to signal their respective alarm conditions: white light for instrument failure; yellow light for intermediate level (7.5 mr/h for the radiation monitron and 1000 counts/min for the air monitors); and red light for high level (23 mr/h for the radiation monitron and 4000 counts/min for the air monitors). A reset button on each module dims the alarm lights; they remain dimmed after release of the push button provided the alarm condition no longer exists.

Buzzer modules. Any alarm condition signaled by an indicator module is called to the operator's attention by an audible alarm. The audible alarm is acknowledged and silenced by the push button on the buzzer module. (The "RS&C" annunciator at the BSR control room will also alarm and must also be acknowledged and silenced.)

Evacuation-alarm modules. One evacuation-alarm module is actuated by any two-of-three radiation-monitron high-radiation signals and the other by any two air-monitor high-radiation signals. A red light glows brightly on the module which is in the alarm condition.

Evacuation system

1. Horn. The evacuation-alarm module in ALARM turns on the evacuation horn which continues to sound for 3 or 4 min until its compressed-gas reservoir is exhausted. After depletion, the reservoir must be replaced and the solenoid trip valves manually reset while the green "silence" button is being depressed to keep the nitrogen cylinder from becoming depleted.
2. Beacons. The evacuation-alarm module in ALARM turns on the flashing beacons. They remain in operation until the alarm condition is cleared, i.e., until sufficient indicator modules have been reset so that neither of the two evacuation-alarm modules remains in the alarm condition.
3. Manual control for evacuation alarm. The three red evacuation alarm push buttons (located on the local console, on the remote console, and on a separate module of the radiation panel) actuate the evacuation horn and beacons; the beacons stop when the Manual Evacuation Module Unit located on the local console (FRCAS panel) is reset.

System monitor and test features

1. Power supply. The "power supply" light (green) glows brightly when the power supply is normal.

2. Horn trouble. The red light for the horn normally glows dimly; the light glows brightly when the supply pressure to the horn is abnormal.
3. Local instrument (i.e., radiation monitor or air monitor) removal. All three lights on the associated indicator module glow brightly when the local instrument is disconnected. If the instrument is a part of the evacuation system, its removal is equivalent to a high-radiation alarm.
4. Normal-disable test switch. When in the DISABLE position, the key-operated switch prevents the evacution horns and beacons from operating when an evacuation-alarm module is in the ALARM condition. However, in the DISABLE position, the switch signals an evacuation-alarm condition to the Emergency Control Center; the center (4-6646) should, therefore, be notified before the switch is operated.

3.5.2. Miscellaneous radiation monitors

In addition to the facility radiation and contamination alarm system, there are three radiation monitors of primary concern. These are the high-bay radiation monitron (alarms at 110 mr/h), the cell-ventilation-duct monitor (alarms at 10 mr/h), and the high-bay log gamma monitor (alarms at 5 R/h). The instrumentation for these three units should be checked occasionally, in addition to those checks required on the checklist, to be sure the "power on" lights are on. (The first two of these three instruments will place the building in containment when their alarm points are reached.)

3.5.3. Procedure for checking the systems by Operations personnel

1. Once a week the 12 to 8 shift will make a performance test on the evacuation horns and the radiation monitors as follows:
   a. Notify the Emergency Control Center (4-6646) that the evacuation horns at the BSR will be tested.
   b. Station an operator at the local controls for the horn and instruct him to close the valves on all nitrogen tanks connected to the horn.
   c. Announce over the public-address system that there will be a test of the building evacuation horns.
   d. Depress one of the evacuation-horn buttons, i.e., check in rotation either the one on the console, the one on the FRCAS panel, or the one on the remote console as determined by consulting the log-book record. When the button is pushed, the horn will sound a short blast, the building beacon lights should start flashing, and the horn trouble lights should brighten. Log the test results in the log book (special section in back).
   e. Reset the FRCAS panel; have the operator reset the horn solenoid valve manually and open the nitrogen tank valves.
   f. Announce over the public-address system that the test is over.
   g. Notify the Emergency Control Center that the test is over.

h. Check to be sure that the nitrogen gas supply is not depleted. (If depleted, the red-colored "horn" light will brighten on the FRCAS panel.)

2. Also, once a week on the 12 to 8 shift, request a Health Physicist to supply a radioactive source to assist in checking the alarm levels for each radiation monitoring unit. This check should be performed as follows:

   a. Announce over the public-address system that there will be a test of the building radiation monitors.

   b. As the CAUTION and HIGH LEVEL alarms are initiated, announce over the public-address system which unit was actuated and the alarm level. Reset the indicator module for each unit before testing the next unit.

   c. Log any abnormalities.

   d. Announce over the public-address system that the test is completed.

   In addition to the checkouts described above, there is a routine performance check made on radiation monitors by a Health Physicist once each month.

3. On a bi-monthly basis, personnel from the Instrumentation and Controls Division routinely check various components of the FRCAS. The checkout procedure is shown in Example 3.1.

Facility Radiation and Contamination System Checkout Procedure

Test	Purpose and Procedure	Correct Operation
1. Preliminary	Prepare to test system	
a. Disable evacuation portion of system	1. Contact Emergency Control Center and notify dispatcher of coming alarm	
	2. Obtain clearance from the operator and have test announced on public-address system	
	3. Turn key switch to "Disable" and close valves on N_2 tanks for whistles	Disconnects evacuation whistles and beacon lights. Gives evacuation alarm signal at Emergency Control Center
b. Check panel lamps	Examine all panel lamps	All lamps are dim
2. Facility Beta-Gamma Contamination System	Test all monitors individually (see checkout sheets for locations)	
a. "Inoperative" alarm	1. Unplug instrument	Buzzer sounds and white lamp glows brightly. Buzzer can be reset, but lamp cannot be reset
	2. Plug in instrument	After 1-min delay, white lamp will reset
b. "Caution" alarm	1. Increase gamma count rate with source to caution-alarm level	Buzzer sounds and yellow lamp glows brightly. Buzzer can be reset, but lamp cannot be reset

Example 3.1.

Facility Radiation and Contamination System Checkout Procedure

Test	Purpose and Procedure	Correct Operation
c. "High-Level" alarm	1. Increase count rate with source to high-level alarm	Buzzer sounds and yellow and red lamps glow brightly. Buzzer can be reset, but neither lamp can be reset
	2. Remove source; reset instruments	
3. Facility Radiation System	Test all monitrons individually (see checkout sheets for locations)	
a. "Inoperative" alarm	1. Unplug instrument	Buzzer sounds and white lamp glows brightly. Buzzer can be reset, but lamp cannot be reset
	2. Plug in instrument	After 1-min delay, white lamp will reset
b. "Caution" alarm	1. Increase radiation level with source to 7.5 mr/h	Buzzer sounds and yellow lamp glows brightly. Buzzer can be reset, but lamp cannot be reset
	2. Remove source until radiation level is less than 7.5 mr/h	Yellow lamp can be reset
c. "High Level" alarm	1. Increase radiation level with source to 23 mr/h	Buzzer sounds and red and yellow lamps glow brightly. Buzzer can be reset, but neither lamp can be reset
	2. Remove source until radiation level is less than 7.5 mr/h	Red and yellow lamps can be reset

Example 3.1. (continued)

Facility Radiation and Contamination System Checkout Procedure

Test	Purpose and Procedure	Correct Operation
d. Return system to normal	Turn key switch to "Normal"	Permits beacon lights and Emergency Control Center indicators to operate on alarm condition. Emergency Control Center alarms will reset
4. Evacuation System	Check all features of evacuation system for correct operations	A coincidence of two high-level alarms from Facility Contamination System or Facility Radiation System should operate the evacuation horn, magenta lights outside building should flash, and Building 2500 should receive correct alarm light. Key-switch lockout of horn and lights, and gas tank pressure switch should also be tested
a. Check for control output from coincidence alarm	1. Turn key switch to "Disable" after contacting Emergency Control Center	Check Emergency Control Center. A radiation and contamination alarm should be noted there
	2. Check evacuation modules for radiation and contamination alarm systems	A coincidence of two high-level alarms from Facility Contamination System or Facility Radiation System should operate the appropriate "Evacuation" module. Red lamps on appropriate module should be bright
	a. Increase radiation at one air monitor to high-alarm level	Red and yellow lamps on this module and buzzer sounds. Red lamp on evacuation module becomes bright. Reset buzzer

Example 3.1. (continued)

Facility Radiation and Contamination System Checkout Procedure

Test	Purpose and Procedure	Correct Operation
	b. Increase radiation of second air monitor in same system to high-alarm level	Red and yellow lamps become bright on second module and buzzer sounds. Red lamp on evacuation module becomes bright. Reset buzzer
	c. Remove radiation sources	Alarm lamps and buzzer may be reset. Evacuation alarm should reset automatically when either alarm is cleared
	d. Different pairs of instruments should be used each time this test is made	
	e. Repeat procedure with pairs of monitrons in the Facility Radiation System	Same results as above except Radiation Evacuation module is tested
b. Check evacuation alarm equipment	1. Close valve on all horn N_2 supply tanks (if not previously done in Part 1)	
	2. Plug in horn trouble test box at horn control box	
	3. Move key switch from "Disable" to "Normal"	Alarm lights at Emergency Control Center clear
	4. Set two coincidence "High-Level" alarms on the Facility Contamination System	Buzzer, channel alarms, and coincidence alarm noted on central panel. Horns sound a short blast, alarm should indicate at Emergency

Example 3.1. (continued)

Facility Radiation and Contamination System Checkout Procedure

Test	Purpose and Procedure	Correct Operation
		Control Center, and flashing lights outside building should start. Horn trouble lights at central panel become bright. Low-line pressure and low-tank pressure lights show on test box
	5. Reduce radiation levels to normal and reset alarm modules	All modules clear, Emergency Control Center alarms clear, and flashing beacons stop
	6. Reset horn solenoid valves manually; open tank valves until low-pressure alarms on test box clear	Gas cylinder pressure gauges should show >1000 psi on tank side of regulator and between 80 and 100 psi on horn side. Neither high-pressure nor low-pressure alarms should show on test box. Horn trouble light becomes dim. All alarms in all locations should be clear
	7. Test high-pressure alarm by raising pressure regulator setting in horn box to more than 110 psi	Horn trouble light should be on. High-pressure alarm is indicated by test box
	8. Close tank valves. Set two coincidence alarms on Facility Radiation System	Buzzer, channel alarms, and coincidence alarm noted on central panel. Horns sound a short blast, alarm should indicate at Emergency Control Center, and flashing lights outside building should start

Example 3.1. (continued)

Facility Radiation and Contamination System Checkout Procedure

Test	Purpose and Procedure	Correct Operation
		Horn trouble lights at central panel become bright. Low pressure alarm lights on test box are lighted
	9. Repeat Step 5	
	10. Repeat Step 6	
	11. Close valves on tanks and push manual evacuation button	Same as Step 4, except no buzzer, no channel alarms, and only a radiation (red) light appears at the central panel and at the Emergency Control Center
	12. Reset manual evacuation button and repeat Step 6	End of test
c. Conclude test	Return all controls and instruments to normal condition	Checklist 1. Key switch is in "normal" position 2. No alarm lights on control panel of Emergency Control Center 3. One gas tank at horn should have valves open, one should have valves closed. Regulator should be adjusted to 100 psi 4. Notify Emergency Control Center and building personnel of end of test period

Example 3.1. (continued)

FACILITY RADIATION AND CONTAMINATION ALARM SYSTEM CHECK SHEET

MONTHLY ☐ BLDG: _____
QUARTERLY ☐ CHECKED BY: _____
ANNUAL ☐ DATE: _____

MONITOR	LOCATION	INOP.	RADIATION		EVACUATE		CONTAIN.			REMARKS
CONTAMINATION										
CAM 1	Pool East Center									
CAM 2	Pool Southwest									
CAM 3	Pool Northwest									
Coincidence module checked using station _____ with all other modules.										
GAMMA RADIATION										
M 1	Pool East									
M 2	Pool Northwest									
M 3	Pool Southwest									
Coincidence Module checked using station _____ with all other modules.										
M 4	Pump House									

*Manual evacuation checked: Local ☐
Remote ☐

BEACON*	LOCATION			HORN	LOCATION	ALARM LIGHTS*			GAUGE PRESS.	
1	Bldg. Corner SW			1	Bay Area					
2	Bldg. Corner NW									
3	Bldg. Corner NE									
4	Bldg. Corner SE									
5	Bldg. Corner SSE									

ALARMS AT BLDG. 2500 - KEY SWITCH DISABLED: Radiation _____
Contamination _____ Buzzer _____.

*Quarterly and annual checks only. Horn and containment to be operated once by each coincidence module.

Example 3.1. (continued)

3.6. Nuclear and Process Instrumentation Checkout Procedures

The performance checks made on the nuclear and process instrumentation are outlined in the ORNL Reactor Controls Department maintenance schedules, maintenance procedures, and maintenance check sheets, published as BSR instrumentation checkout procedures. The completed check sheets are filed in the BSR control room.

4. REACTOR COMPONENTS AND REACTIVITY CONTROL

4.1. Introduction

There are four principal areas of concern regarding the handling of fuel and other reactor components at the BSR. The first is the necessity of maintaining the reactor itself within specified limits of excess reactivity. The second involves maintaining a place of storage outside the reactor that is safe by both criticality and radiation standards. Third, fuel movements must be scheduled and performed to minimize personnel radiation exposure, as well as to retain criticality safety. Fourth, records must be maintained to indicate the location, amount, and condition of all fissionable material within the BSR area.

The fuel elements described in Section 4 are the original BSF standard fuel element and BSF control rod element. In recent years, MTR-type fuel assemblies from shutdown reactors in the USA have been adapted for use in the BSR lattice. Some of these elements have 200 g of ^{235}U distributed equally among 19 fuel plates. New MTR-type fuel assemblies have been constructed using 220 g of ^{235}U distributed equally among 18 fuel plates. Also, new control rod elements have been constructed using 110 g ^{235}U distributed equally among 9 fuel plates.

4.2. General Precautions

1. All procedures involving the moving of fuel, experiments, or the reactor must be understood before attempting any of these tasks.
2. Care must be taken not to subvert criticality safety by suspending experiments containing fissionable material near fuel storage racks; as a general rule, at least 12-in. of separation should be maintained.
3. The reactor must never be repositioned while it is being operated.
4. It should always be assumed that all materials stored in the BSR pool are highly radioactive unless proven otherwise.
5. The lids on the fuel racks should be closed after fuel transfers are completed.
6. Any trouble or difficulty with reactor components or any unplanned deviation from accepted procedure should be reported to the reactor supervisor or his designated representative as soon as it is possible and details of such events should be carefully recorded in the BSR log book.

4.3. Fuel Units

4.3.1. References

M 20310 EJ 002, BSF Standard Fuel Element - Assembly

M 20310 EJ 003, BSF Standard Fuel Element - Detail Sheet 1

M 20310 EJ 004, BSF Standard Fuel Element - Detail Sheet 2

M 20310 EJ 005, BSF Control Rod Fuel Element - Assembly

M 20310 EJ 006, BSF Control Rod Fuel Element - Detail Sheet 1

M 20310 EJ 007, BSF Control Rod Fuel Element - Detail Sheet 2

M 20310 EJ 008, BSF Control Rod Fuel Element - Guide

4.3.2. Description

Regular fuel elements. The fuel elements used at the BSR are 18-plate, MTR-type assemblies equipped with a cylindrical end box at the bottom section and a handling bar at the top section. Each new fuel element (standard) has approximately 190 g of ^{235}U distributed equally among the 18 fuel plates (see Fig. 4.1). Selected reference dimensions for BSR fuel elements are given in Table 4.1.

Control-rod fuel elements. There are special fuel elements for the five shim rods and the one shim-regulating rod. These elements (see Fig. 4.2) are sometimes called "half" fuel elements because the central nine fuel plates are omitted from the assembly. Instead of the fuel plates, a shim-rod-guide channel is located in the central portion of the element. As might be readily inferred, the shim-rod-guide channel serves as a housing and guide for the shim safety or shim regulating rod. At the upper end of the assembled element is a flange to which the lower section of the magnet guide tube is bolted, as

ORNL DWG. 65-3145AR

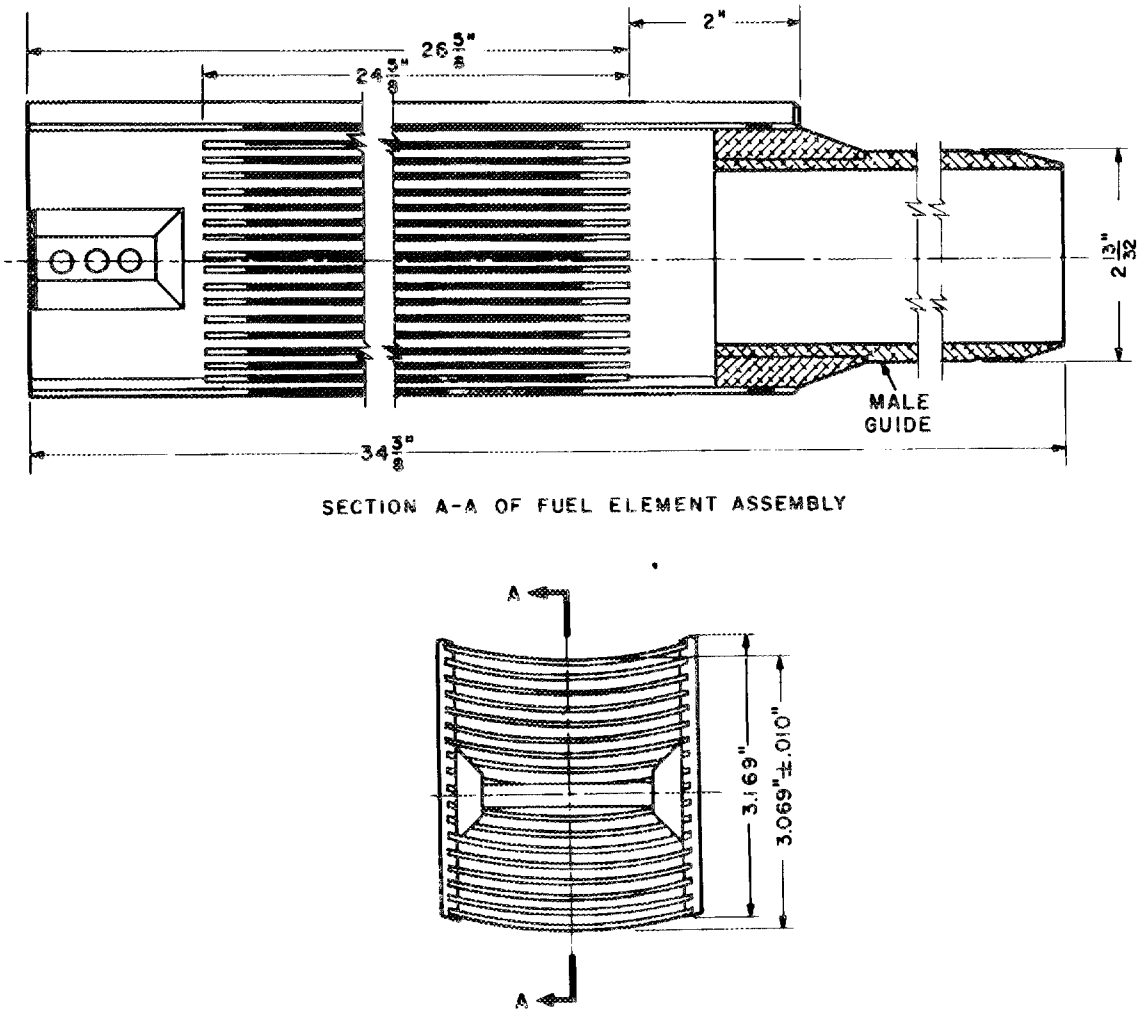

Fig. 4.1. Standard BSR fuel element.

Table 4.1. Selected reference dimensions for standard BSR fuel elements

Unit	Nominal dimension (in.)
Element Assembly	
Length	34 3/8
Width (through side plates)	2.996
Width (through outside fuel plates)	3.069
Plate spacing	0.117
Inside Fuel Plates	
Thickness (overall)	0.060
Length (overall)	24 5/8
Clad thickness	0.020
Core (alloy) thickness	0.020
Core (alloy) length	23 5/8
Width (before bending)	2.845
Outside Fuel Plates	
Thickness (overall)	0.060
Length (overall)	28 5/8
Clad thickness	0.020
Core (alloy) thickness	0.020
Core (alloy) length	23 5/8
Width (before bending)	2.845

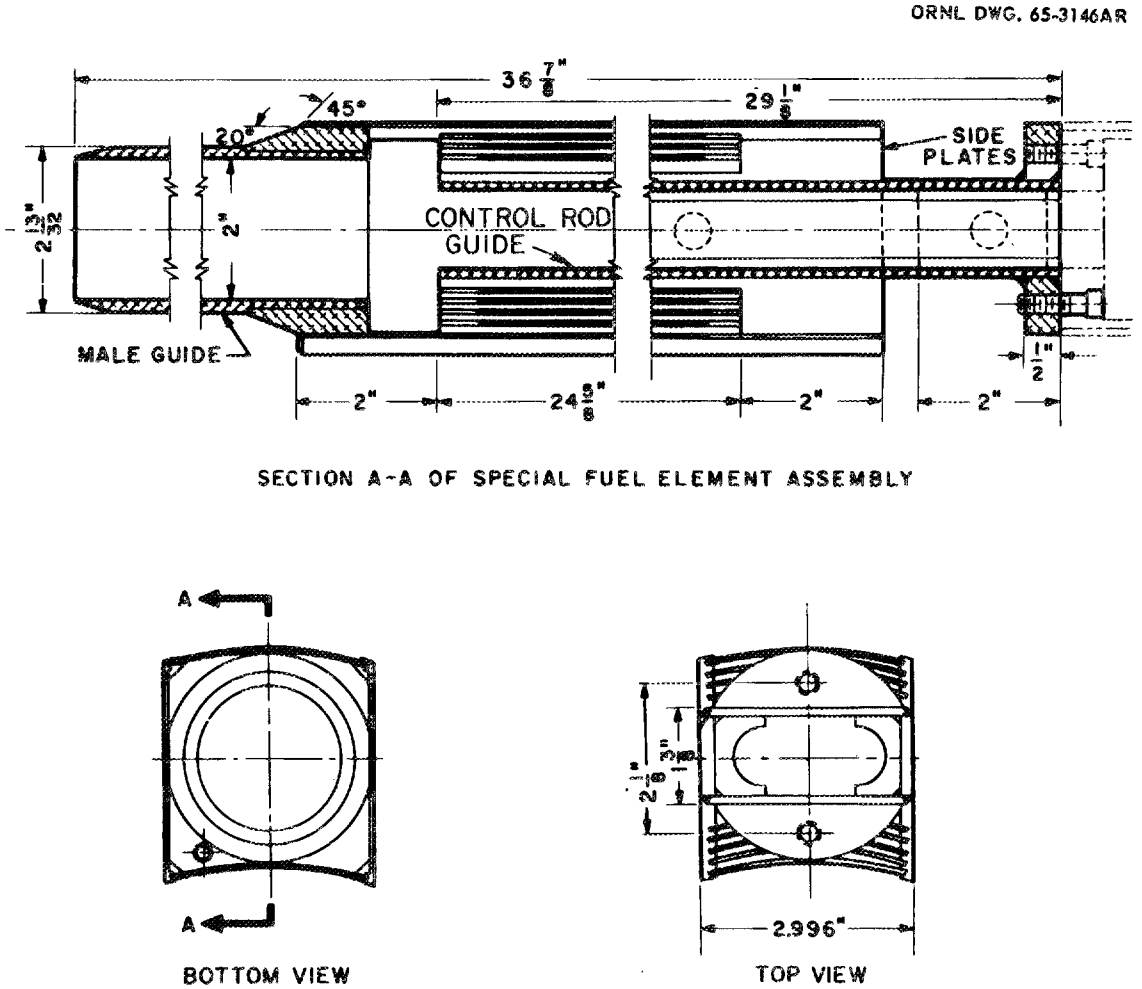

Fig. 4.2. Special fuel element for control rod.

shown in Fig. 4.2. Also shown are semi-circular inserts which fasten to the flat sides of the element and which serve to control shim rod vibration caused by turbulent water flow. Each new element contains approximately 95 g of ^{235}U and is 36 7/8 in. in length.

4.3.3. Fuel storage - general requirements

Fuel storage is defined as the temporary retention of fissionable material outside of the reactor core. The material will normally be in the form of standard and "half" fuel units; however, fissionable material belonging to research groups may also be stored.

The methods of preventing and/or handling criticality hazards outside of the reactor core must be approved by the ORNL Criticality Review Committee. The design of fuel-unit storage racks and transfer casks is approved, in writing, by the chairman of that committee. Design of storage racks for BSR fuel is based on data obtained from critical-mass experiments. Approved underwater storage facilities at the BSR consist of:

1. two 30-place aluminum storage racks (see Fig. 4.3), for irradiated fuel elements, which sit on the floor of the north pool and are equipped with safety lids that may be locked in the closed position; and
2. a work platform, designed to accommodate underwater assembly or disassembly of shim-rod components, which is equipped with two approved storage spaces used primarily to hold the shim-rod elements during maintenance work.

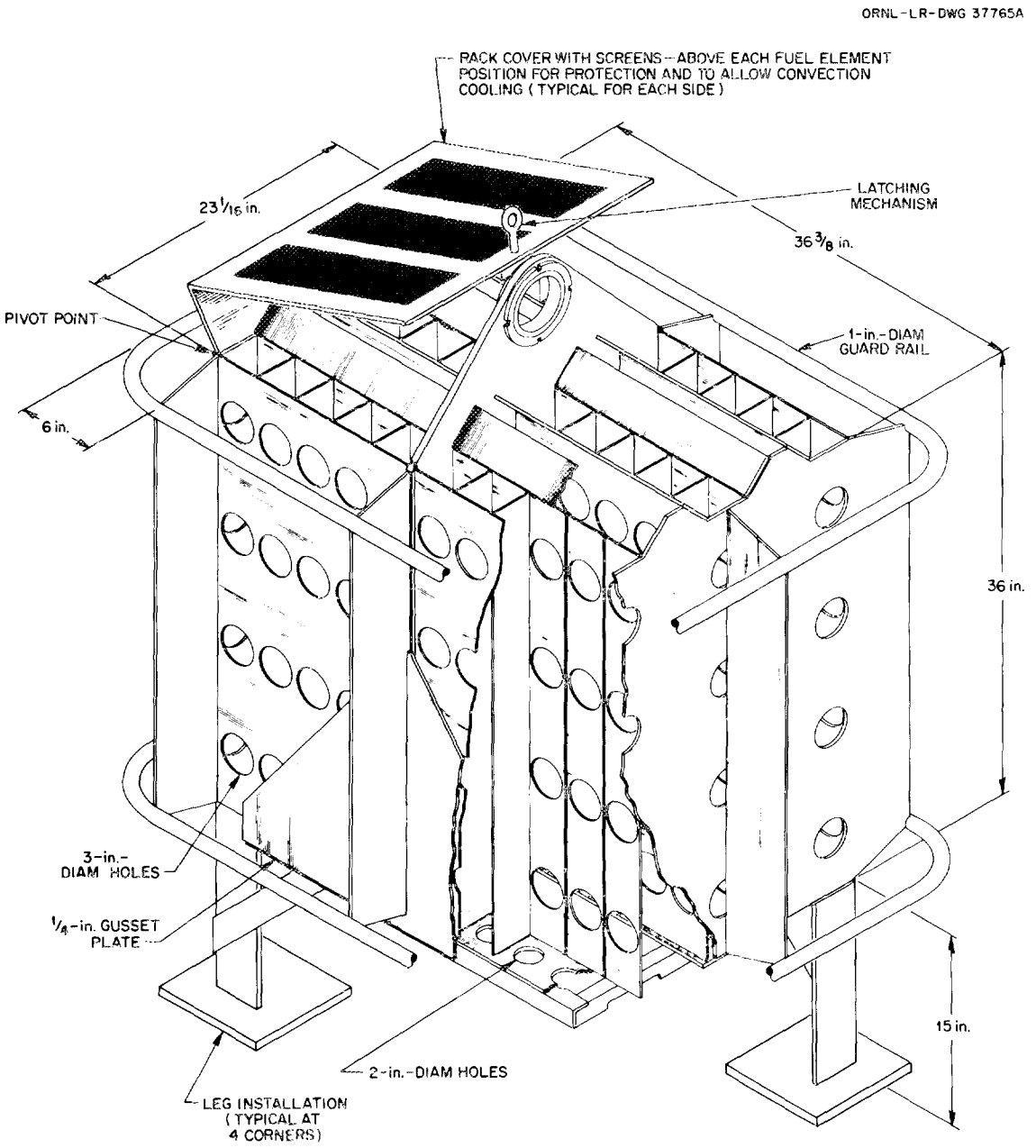

Fig. 4.3. Fuel storage rack.

Fuel elements presenting no radiation hazard (new, unirradiated elements and some used elements) are stored in the vault in the basement of Building 3042. Storage of heavy water or ordinary water in this area is forbidden.

Storage of fissionable material belonging to research groups is more flexible. Experiments are normally suspended in the pool from the bridge or from the side of the pool. Care must be taken not to subvert criticality safety by suspending experiments containing fissionable material near standard storage racks; as a general rule, at least 12 in. of separation should be maintained. (Special problems associated with a particular experiment are brought to the attention of the BSR operating staff by the Technical Section, Operations Division.)

4.3.4. Shipping fuel elements from the BSR pool

Procedures and equipment for shipping irradiated fuel elements from the BSR pool must be approved by the Criticality Review Committee. Ordinarily, these elements are removed one at a time in an LITR fuel carrier.

The carrier, supported from the crane, is lowered into the water to a depth of approximately 10 ft. The carrier lid is removed (normally with a rope); and the element, after being identified, is transferred into the carrier. After the lid is replaced and as the carrier is raised out of the water, a Health Physicist must be present to monitor the radiation level. He will record all pertinent information on the standard radiation tag and tie this tag to the carrier. A plastic bag is to be placed around the bottom section of the carrier (see Section 9.2.6 for details on shipping irradiated materials).

4.4. Control Rods and Drives

4.4.1. References

RC 15-3-3A, Shim Regulating Rod

RC 15-3-3B, Shim-Safety Rod Drive - Assembly

RC 15-3-3C, Shim-Safety Rod Drive Detail - Sheet 1

RC 15-3-3D, Shim-Safety Rod Drive Detail - Sheet 2

RC 15-3-3E, Shim-Safety Rod Drive Detail - Sheet 3

RC 15-3-3F, Shim-Safety Rod Drive Detail - Sheet 4

RC 15-3-3G, Shim-Safety Rod Drive Detail - Sheet 5

RC 15-3-4A, Magnet Coil - Assembly and Details

RC 15-3-4B, Shim and Regulating Rod Guide Tube Access - Detail Sheet 1

RC 15-3-4C, Lift Tube and Drive Accessories - Details

RC 15-3-4D, Magnet Coil - Details

RC 15-3-4E, Universal Joint for Magnets - Assembly and Details

RC 15-3-4F, Shim and Regulating Rod Guide Tube and Accessories Detail Sheet 2

RC 15-3-4G, Shim Rod and Guide Tube Assembly

RC 15-3-6A, Dual Synchro Mount - Details

RC 15-3-6B, Dual Synchro Mount - Assembly and Details

M 11240 PF 001, Spare Parts for BSR Boron-Stainless Steel Shim Rod - Details

M 20310 PF 002, Universal Joint for Magnet Keeper - Assembly and Details

4.4.2. Description

The BSR normally contains six control rods, each of which contains a boron-stainless steel "neutron-poison" section. The rods are oval in cross-section (see Fig. 4.4). They have a 24-in. vertical stroke within the control-rod fuel elements. These elements are flanged to guide tubes that extend several feet above the reactor bridge and are fastened to the bridge structure by the hold-down arms (see Fig. 4.19). The guide tubes serve a dual purpose in that they both guide the rod drive and hold the special fuel element in place during control-rod withdrawal. An in-line drive unit (consisting of an electric motor, position transmitters, limit switches, etc.) is attached to the top of each guide tube. (Details of the rod-drive mechanism are shown in Fig. 4.5.) The motors drive lead screws which are mechanically attached to the lift tubes located within the guide tubes. The lower end of each guide tube contains a shock-absorber cup (partially shown), a bottom stop (or seat) for the top of the rod, and mechanical portions of the seat switch assembly. The top of each shim rod is equipped with a shim-rod extension, a magnet armature, and a piston-and-spring assembly to provide shock-absorber action (see Figs. 4.4 and 4.6). The lower end of each shim-rod-drive lift tube is equipped with an electromagnet (see Fig. 4.7) which, during reactor operation, is mated to the magnet armature (attached to the top of the shim-rod extension).

ORNL-PHOTO 0842-71

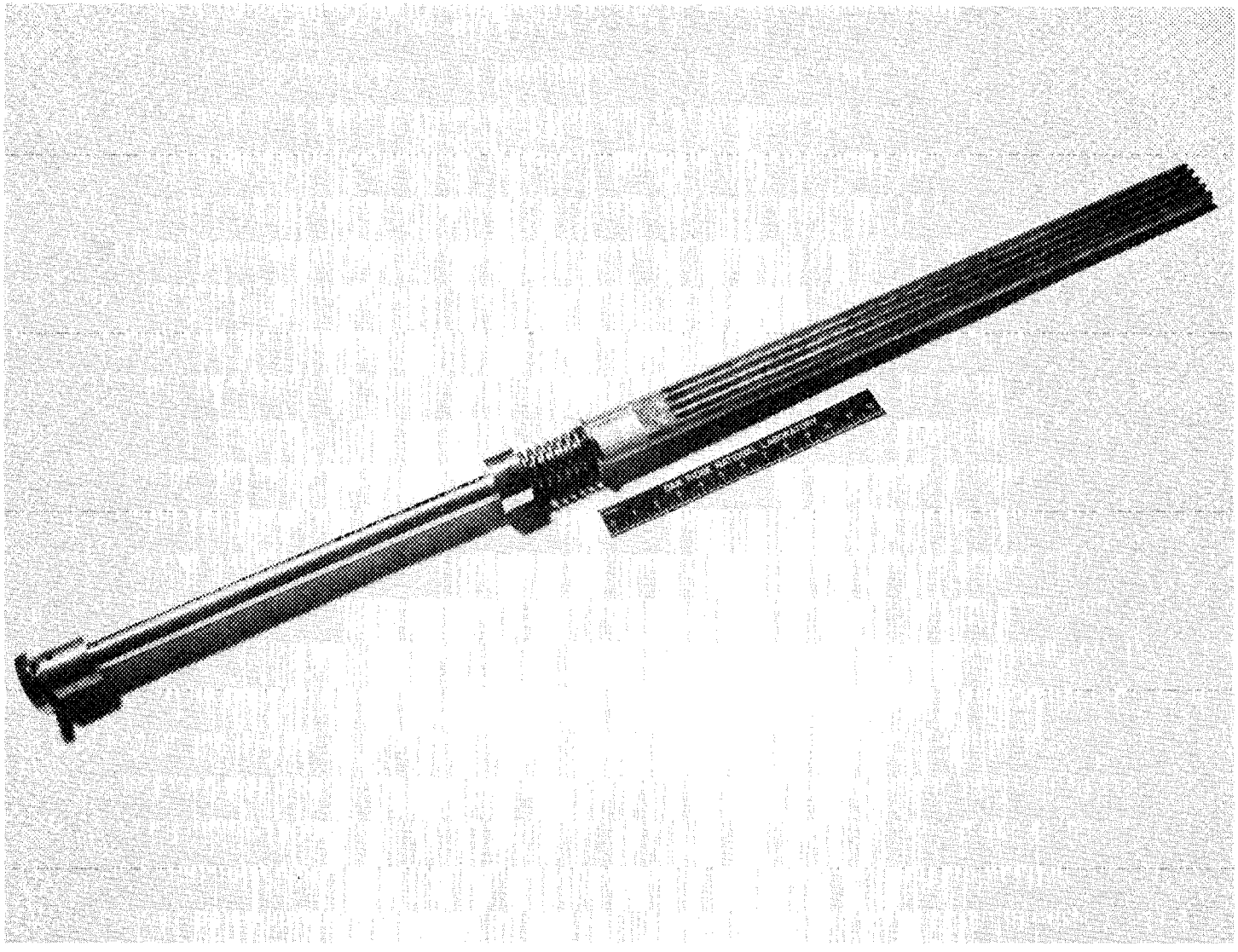

Fig. 4.4. BSR control rod with shock absorber, shim-rod extension, and armature.

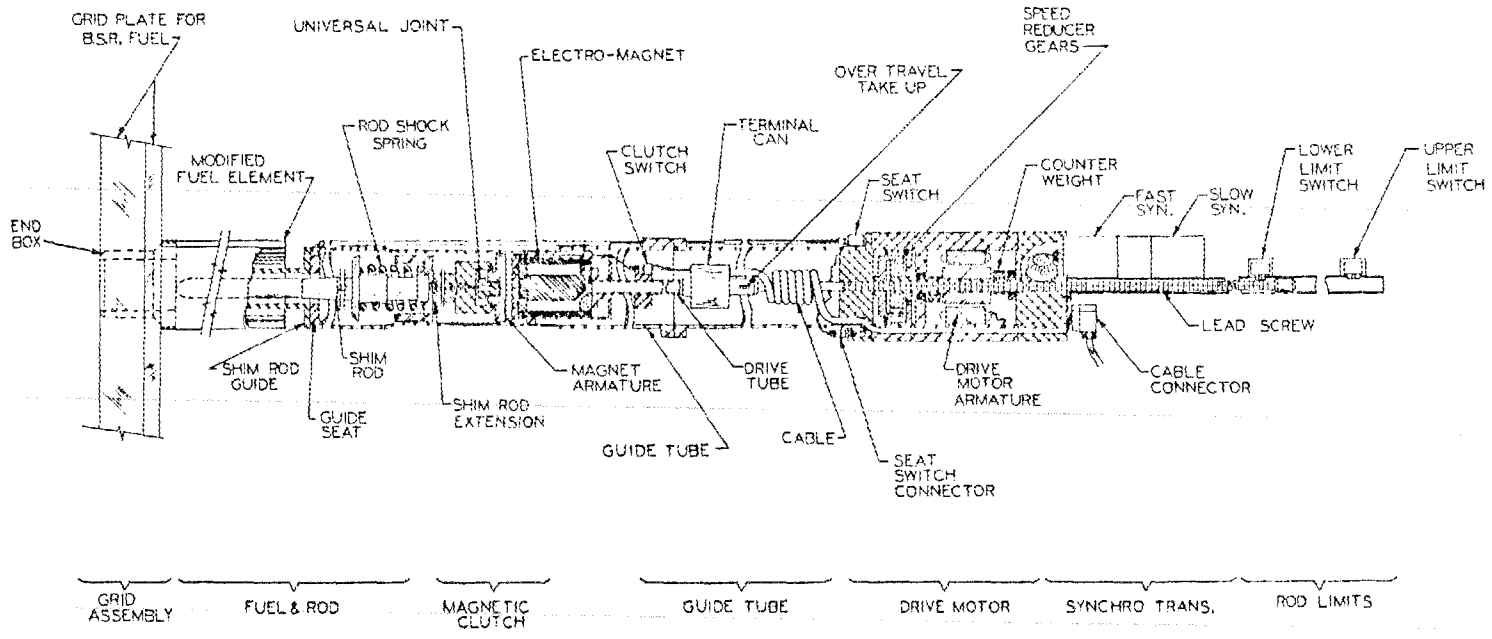

C-SK-JWS-830217-01

Fig. 4.5. BSR-PCA control drive mechanism.

ORNL-PHOTO 0843-71

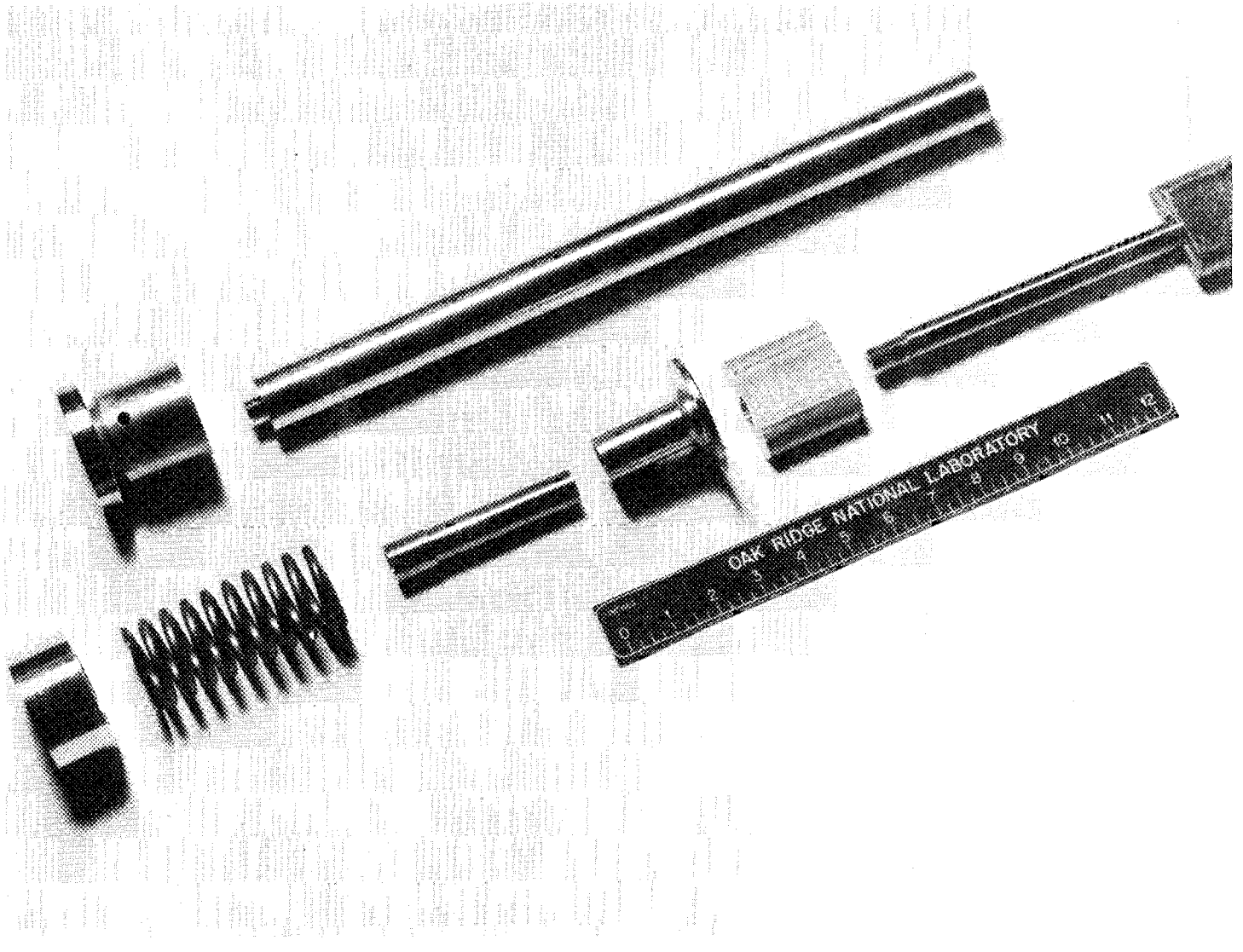

Fig. 4.6. Shock absorber, shim-rod extension, and magnet armature (shown prior to assembly).

ORNL-PHOTO 0008-71

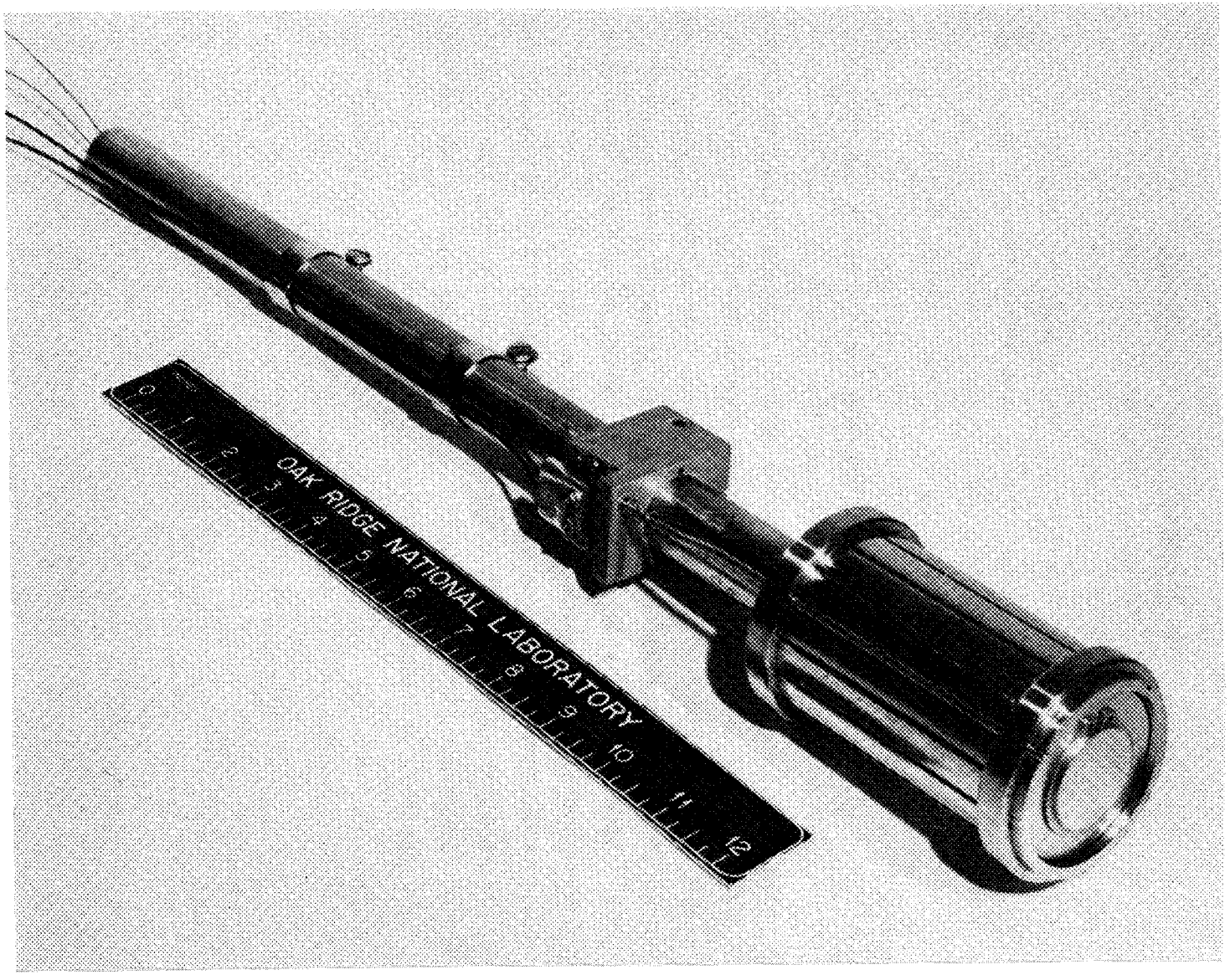

Fig. 4.7. Electromagnet for BSR-PCA shim rod.

The integral reactivity worth of each rod in a typical loading is as follows:

Rod No.	% $\Delta k/k$
1	1.840
2	1.849
3	2.759
4	2.958
5	0.946
6	1.015

The regulating rod in the BSR consists of a restricted amount of the stroke of the No. 4 shim rod; the servo system is allowed to control the rod within this restricted amount of stroke. All of the BSR shim-control rods have a motor-driven withdrawal speed of about 0.1 in./s. Since the regulating rod has a maximum differential worth of slightly more than 0.2% $\Delta k/k$ per in., the maximum rate at which it can add reactivity to the core is about 0.02% $\Delta k/k$ per s. The total stroke of the regulating rod is always limited to $\leq$0.5% $\Delta k/k$; this limit prevents failure of the servo system from causing the reactor to be made prompt critical. (For detailed information on rod worths, see Section 4.5.2.)

4.5. Core Loadings

4.5.1. Introduction

Decisions to reload the BSR core and any changes intended in the configuration of the core will originate with the reactor supervisor. This section covers those special procedures that are required when such changes are to be made.

4.5.2. Reactivity worth of the control rods

When preparing reactor loadings, the effect on rod worths is always evaluated. In addition to the limits on maximum excess reactivity and maximum worth of the core (with respect to rod worth), a minimum shutdown margin is also included in the evaluation. The minimum shutdown margin (50% of the worth of the control rods) is always greater than the worth of the experiment with the greatest reactivity effect.

Typical reactivity worths of the rods, as determined by the period measurement technique, are shown in Figs. 4.8 through 4.16; from these values, reactivity worths of experiments have been determined.[2]

4.5.3. Refueling Procedures

In order to retain sufficient excess reactivity to permit the desirable flexibility in meeting operating schedules, it will on occasion be necessary to make changes in the fuel content of the core by replacing low-weight fuel elements with

---

[2]W. H. Tabor, Bulk Shielding Facility Quarterly Report - January, February, and March of 1967 (May 23, 1967).

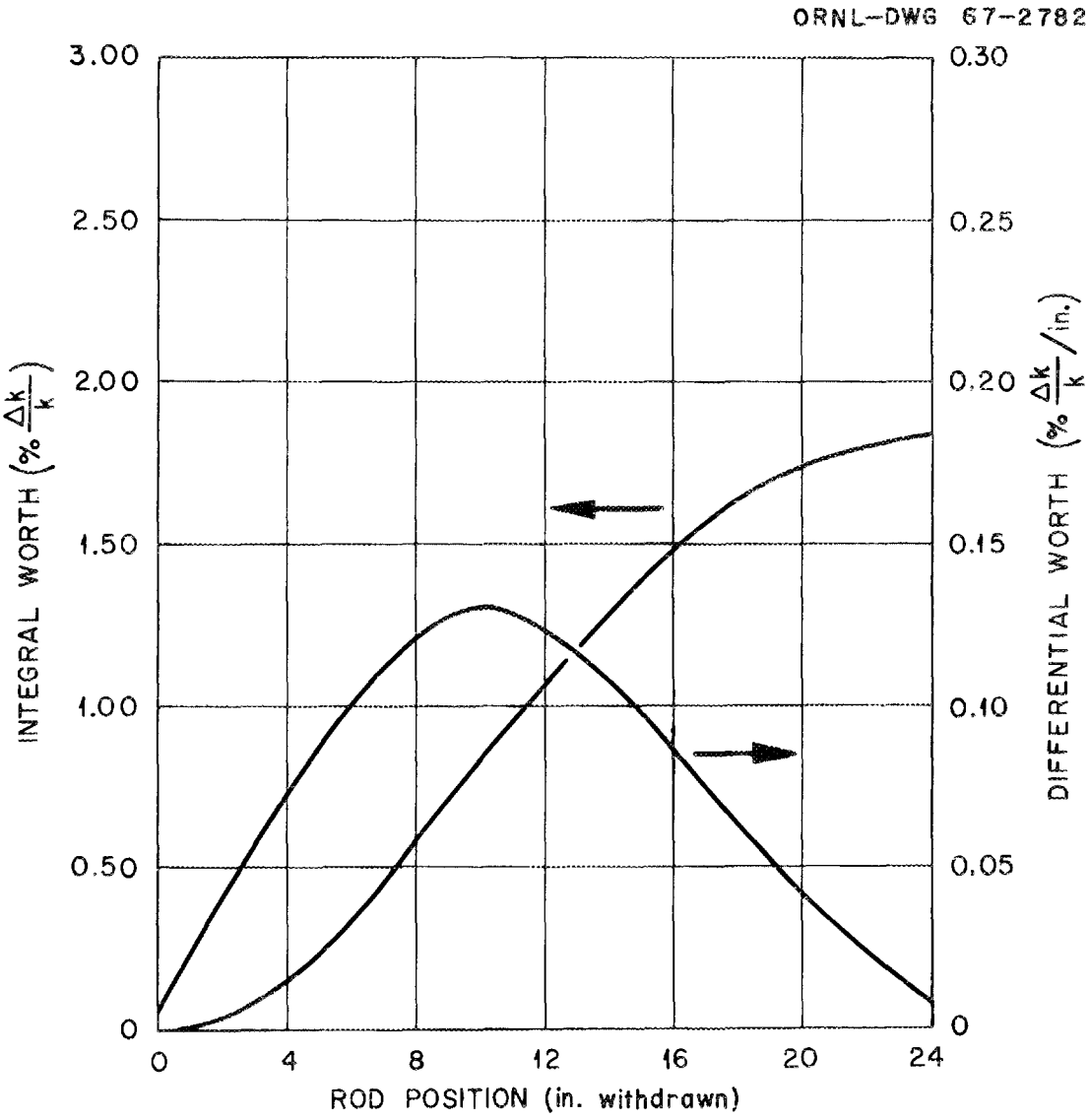

Fig. 4.8. No. 1 shim-rod calibration.

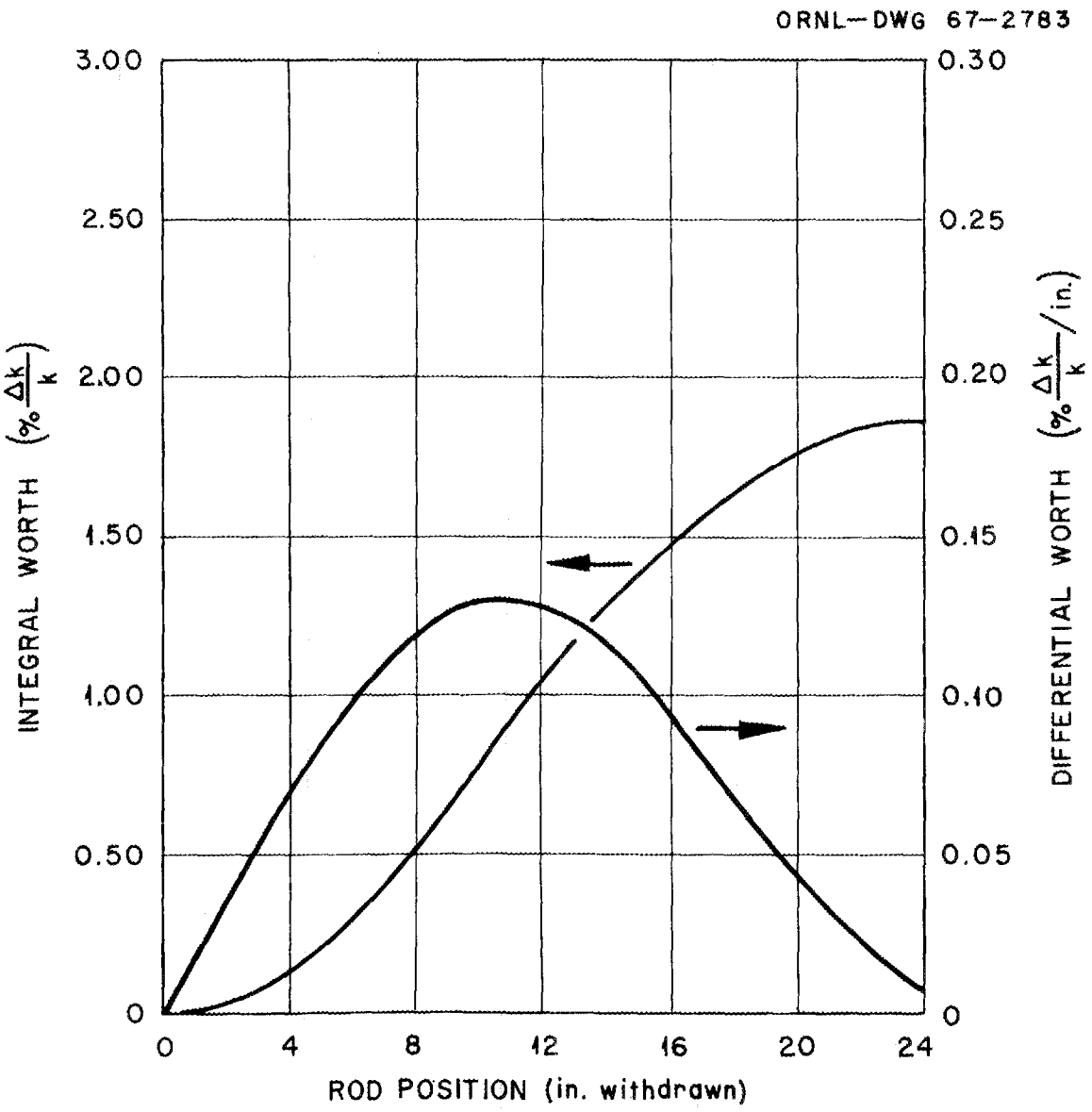

Fig. 4.9. No. 2 shim-rod calibration.

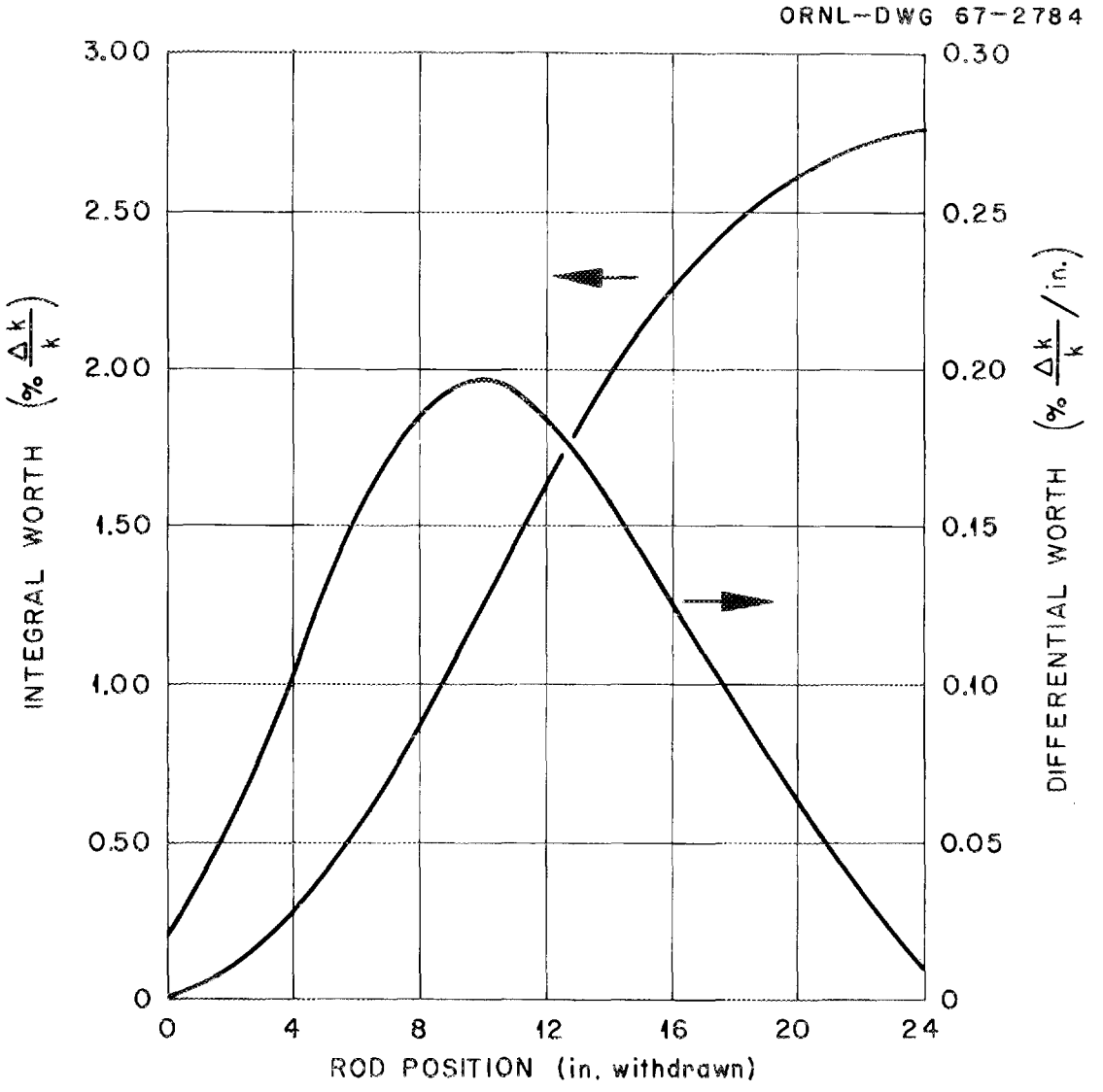

Fig. 4.10. No. 3 shim-rod calibration.

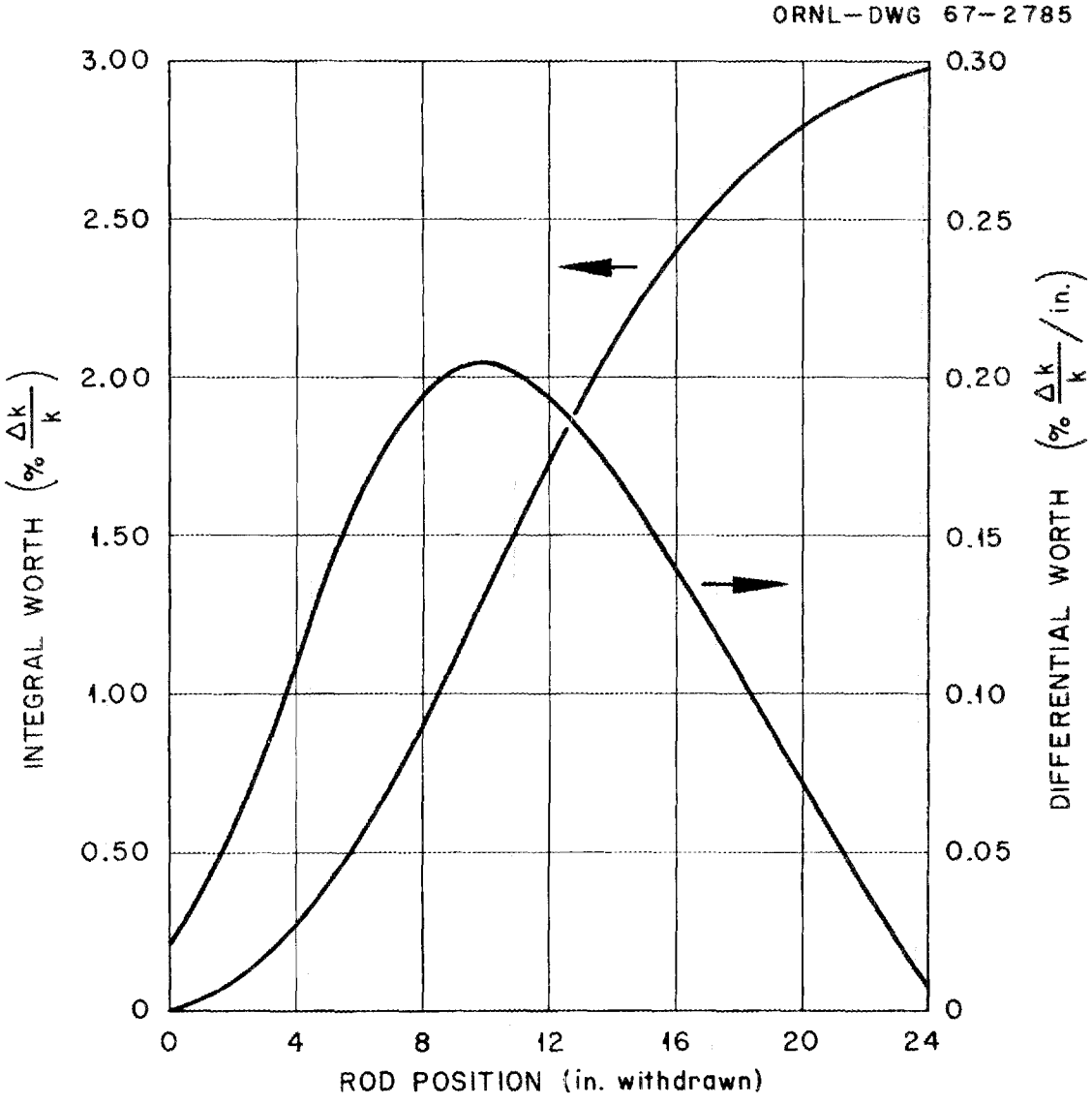

Fig. 4.11. No. 4 shim-rod calibration.

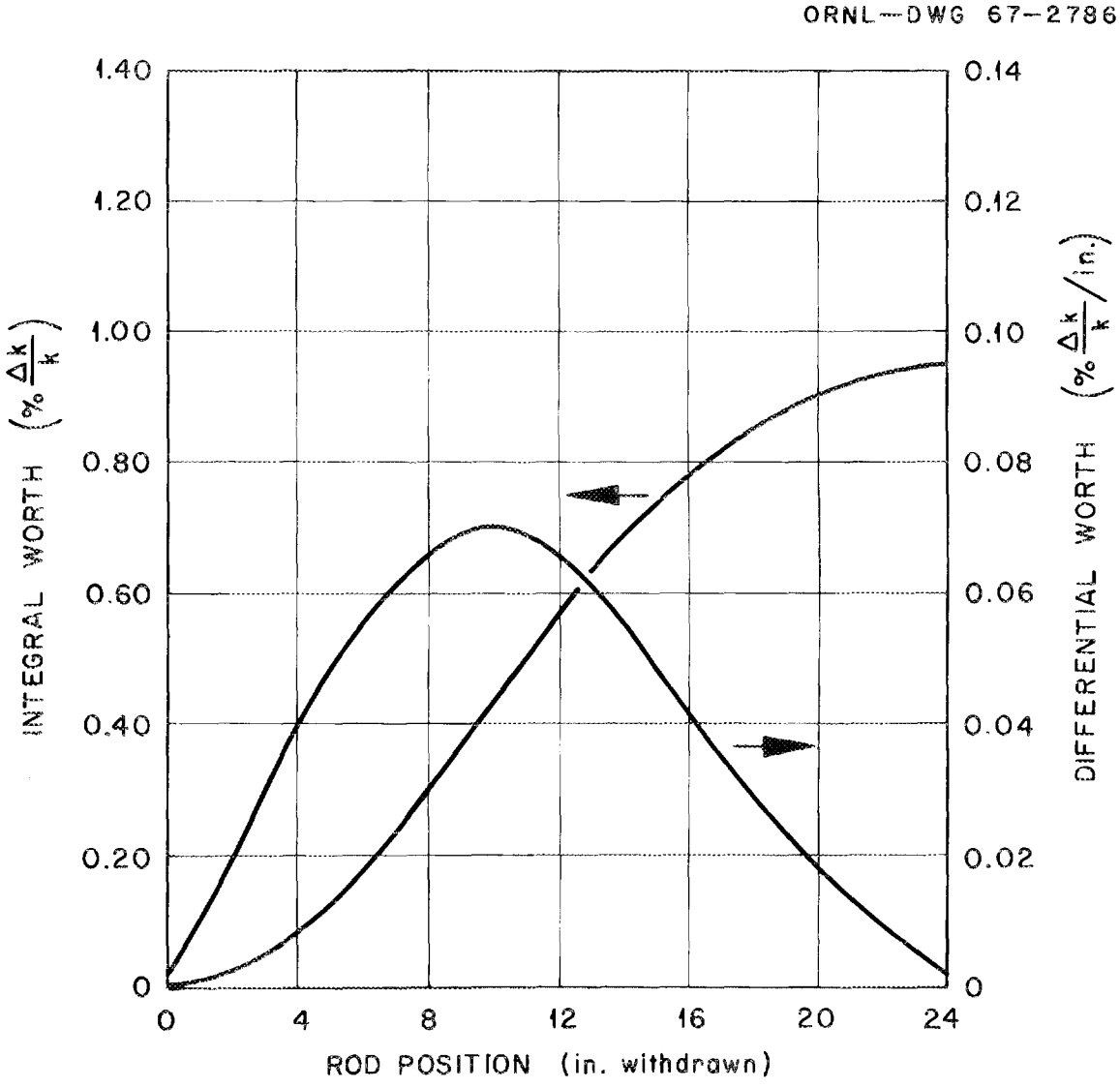

Fig. 4.12. No. 5 shim-rod calibration.

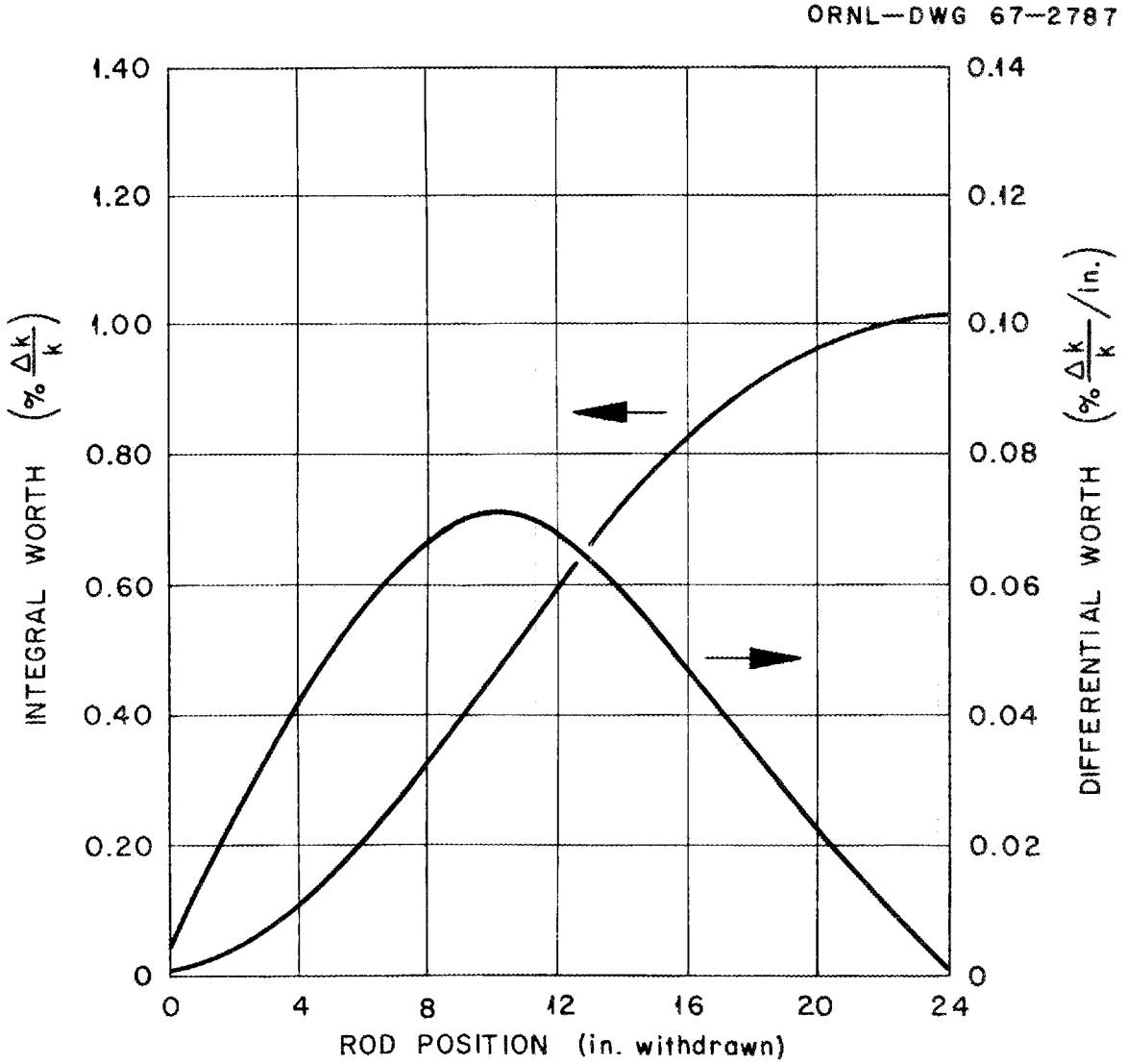

Fig. 4.13. No 6 shim-rod calibration.

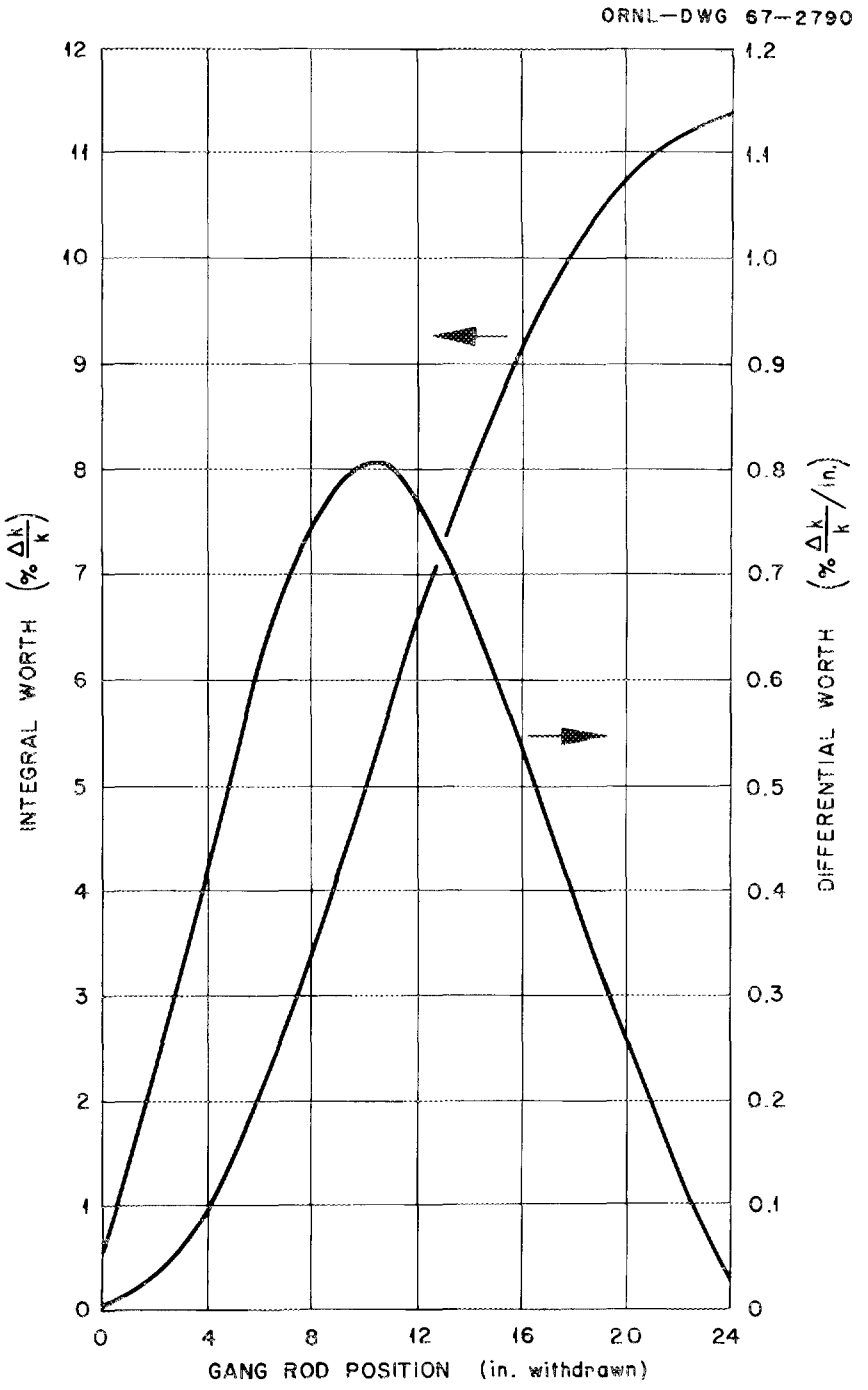

Fig. 4.14. Differential and integral worths of shim-rods 1 through 6.

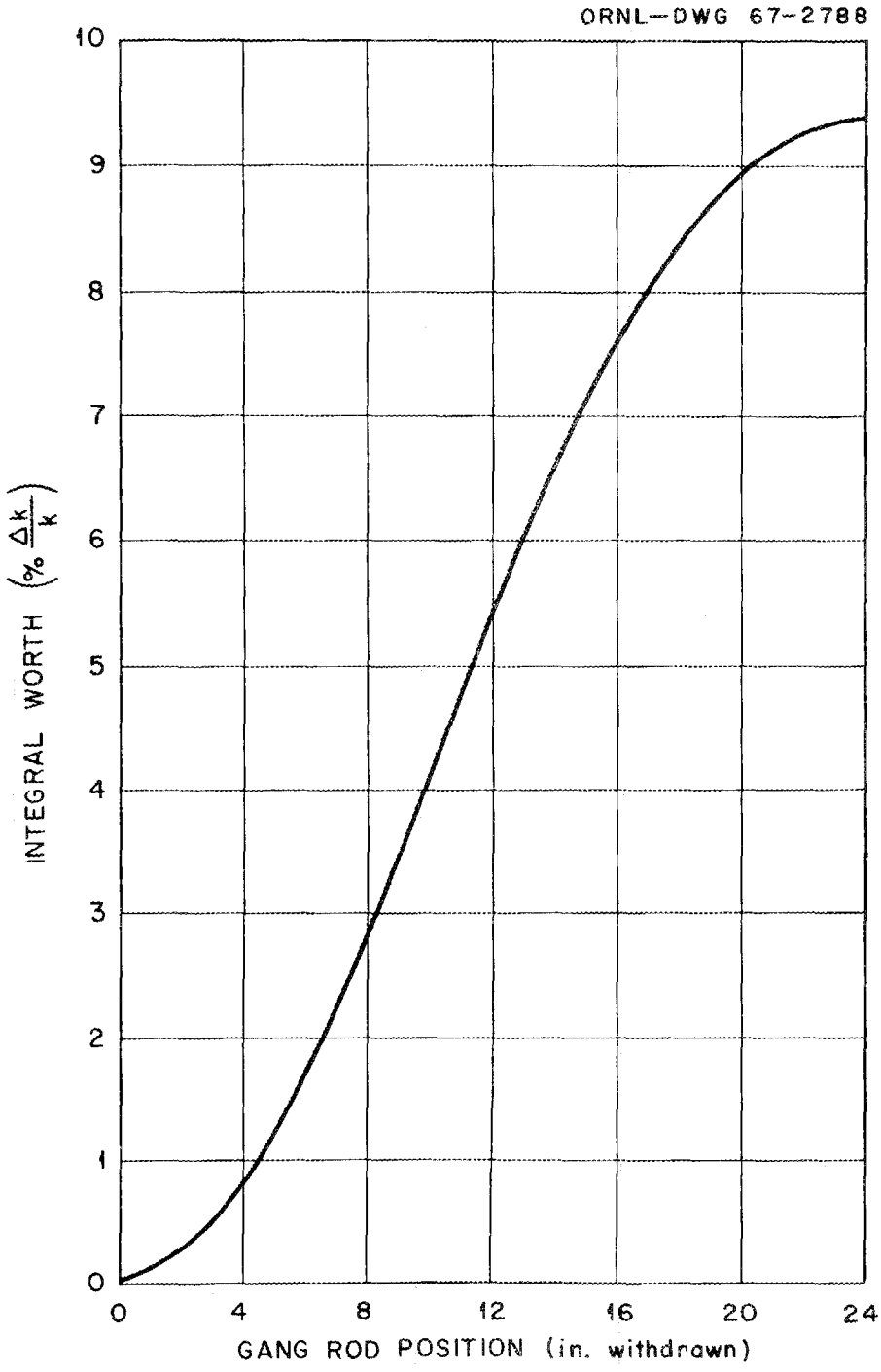

Fig. 4.15. Integral worth of rods 1 through 4.

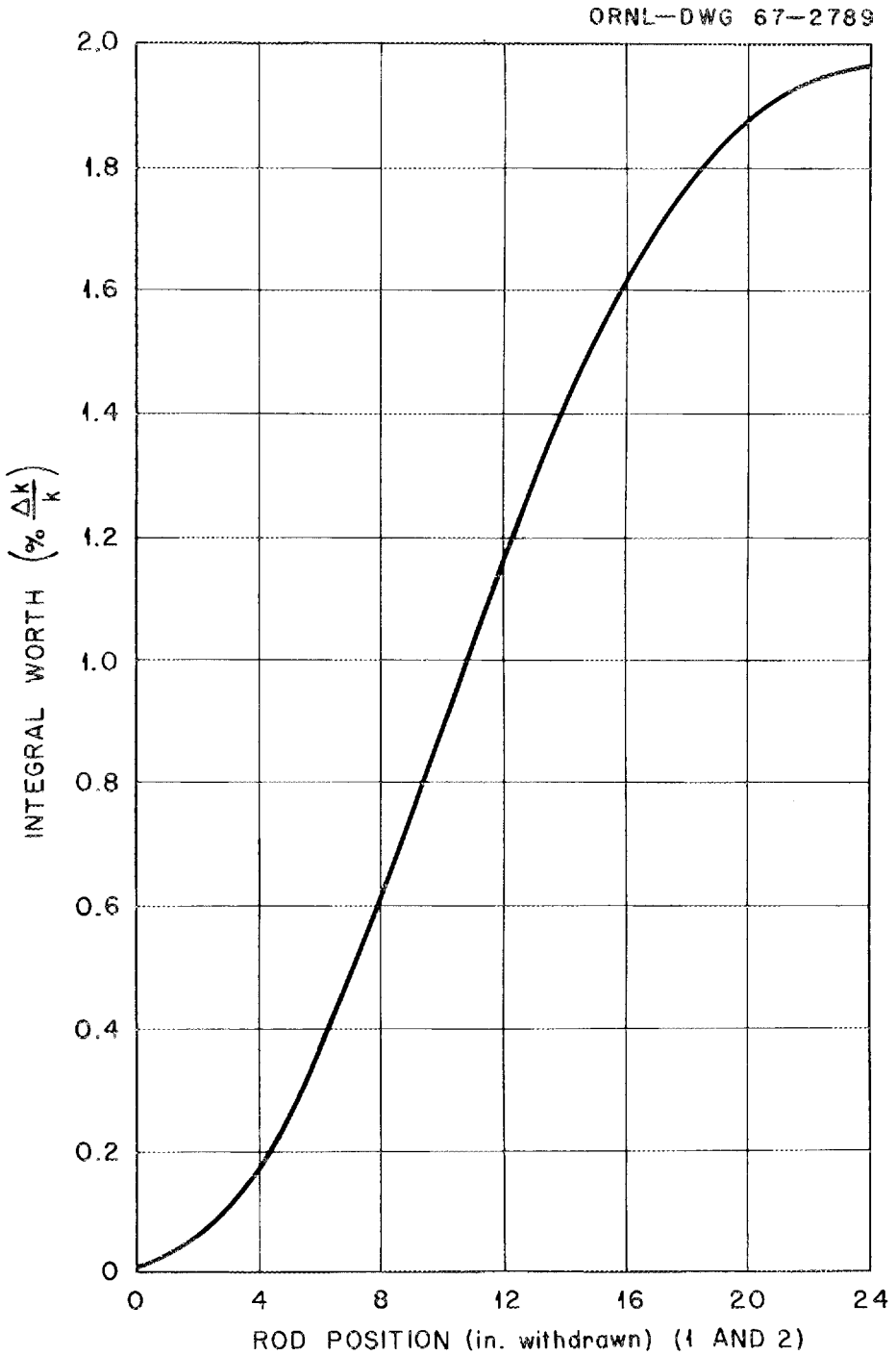

Fig. 4.16. Integral worth of rods 5 and 6.

elements containing more fuel. The criterion exercised in preparing for and obtaining satisfactory loadings for continuity of operation is that the maximum excess reactivity in the core does not exceed 50% of the shutdown capability of the shim-control rods.

When a core is to be reloaded extensively or a reactor configuration assembled, records of previous reactor configurations and cores should be reviewed to establish (if possible) a reference or standard of comparison for the proposed reactor configuration. The proposed core loading will be prepared by an engineer of the Operations Division and submitted to the reactor supervisor on a special form (Example 4.1) or specially prepared instructions for small core changes, such as the addition of two new fuel elements, for his approval. Additional information pertinent to the activities will be supplied. The completed proposal must be signed by the BSR supervisor and proper approvals must be obtained as outlined in the following sections. The following information should be included in the loading proposal for a change in core configuration.

1. Fuel-element and shim-rod-element numbers, locations, and weights.
2. Shim-rod positions and shim-rod numbers.
3. Fission-chamber lattice position.
4. Experiment locations (and types, where important).
5. Location, type, and quantity of all other materials or components in or near the core.
6. The order in which fuel elements (and other components) should be loaded.

REPLACEMENT LOADING

PURPOSE: ☐ SCHEDULED RELOADING ☐ UNSCHEDULED RELOADING

ENDING CYCLE

BEGINNING CYCLE

PREPARED BY

CHECKED BY

DATE:	ELEMENTS REMOVED		CHANGE IN WEIGHT U^{235}	ELEMENTS INSERTED		
CORE POSITION	OR NUMBER	WEIGHT U^{235}		OR NUMBER	WEIGHT U^{235}	LOCATION
NEW ELEMENTS	SUBTOTAL					
	SHIM RODS					
	OTHER UNITS					
	TOTAL					

UCN-2274
(3 2-67)

Example 4.1.

7. Points during assembly at which critical runs should be made.

If the core to be loaded is significantly different from all other previously assembled configurations, then the procedure described in Section 4.5.4, below, should be followed.

The movement of the fuel elements within the core region is performed under the supervision of a qualified BSR supervisor. Each fuel element is identified immediately before insertion or after removal from the core and/or during its relocation within the core. Specific instructions are given by the supervisor for each fuel movement and he ensures that movements comply with the written schedule. A Transfer Memo, Example 4.5, is completed by the supervisor and transmitted to the section accountability representative. This information becomes a part of the permanent records.

4.5.4. Approach-to-critical procedure

This procedure is provided for those special occasions when significant changes are made in the core configuration, i.e., when a new or quite different core configuration is to be assembled. Loadings requiring the use of the approach-to-critical technique will be designated by the reactor supervisor and approved detailed instructions of the activities will be provided.

Unless specifically directed by an approved procedure, the loading should proceed from the inner region to the outer edges (any unloading should be performed by working inward from the outer edges). With this method, no unoccupied position or "hole" will be created during the fuel handling. In

addition, all requirements for handling fuel (listed in Section 4.6.1) shall be fully satisfied.

1. Movement of fuel into the core

   a. Personnel requirements

      The approach-to-critical procedure requires the presence of at least three qualified individuals including, but not limited to: (1) a supervisor, usually the reactor supervisor or his designated representative; (2) a loading supervisor (usually the day shift supervisor or the shift supervisor); and (3) a fuel handler (usually an operator).

   b. Duties of personnel

      (1) Supervisor - The supervisor will select the fuel unit to be placed in the core (his choice must not violate the applicable detailed procedure governing the particular loading in progress). He will inform the loading supervisor as to the unit identification number and the receiving core position. (Fuel transfer memos, Example 4.5, should be used whenever fuel elements are moved from one location to another.) The supervisor will verify that the control rods are fully inserted. During the movement of the fuel unit, the supervisor will personally monitor the nuclear instrumentation and determine if the unit may remain in the core or must be removed. He will inform

the loading supervisor of his decision. During subsequent control-rod movement, he must be present in the control room and must monitor the nuclear instrumentation to determine that the assembled loading is not overly reactive.

(2) Loading Supervisor - The loading supervisor, after receiving instructions from the supervisor, will determine the source (for example, storage-rack position) of the unit. He will instruct the fuel handler to remove the unit from its storage location; he will personally verify that the identification number on the unit is that of the desired unit. When the unit is about to be moved into the vicinity of the core region, he will signal the supervisor that he is ready to load. When the unit is over the desired grid position so that only vertical movement (and minor horizontal movement) is required, he will verify this and signal the supervisor that the unit is entering the core. In addition to being alert to instructions from the supervisor to remove the unit, he will ensure that the fuel handler does not unlatch the handling tool and he will verify that the unit is seated properly. When instructed by the supervisor, the loading

supervisor will have the fuel handler unlatch, remove, and store the handling tool. The loading supervisor will then clear the bridges of any personnel and report to the control room for further instructions.

(3) Fuel Handler - The fuel handler will make the required fuel moves under the direct supervision of the loading supervisor and will assist in the location and identification of the various fuel elements. He will take no action on his own initiative, however, since he will usually be preoccupied with the physical labor involved and, therefore, may not be fully abreast of the changes in progress.

c. Requirements

(1) Prior to any loading or test involving a series of fuel additions, the BSR startup checks shall be completed unless the test follows a previous one for which these checks were completed and following which the key switch and all instrumentation has remained on. (A qualified reactor supervisor of the Operations Division staff must be present in the immediate vicinity of the control room or in the adjacent office at all times when the control switch is in the ON position and the reactor is down.)

(2) The minimum instrumentation required during movement of fuel into the core is identical to that required for startup of the reactor in Mode 1 (listed in Section 2.1.5). However, an additional fission-chamber channel will be required during any criticality test which immediately follows replacement of the log-N chamber; i.e., any test which precedes operation at power levels sufficient to allow the proper operation of the log-N channel to be determined. This additional fission channel shall provide information but not control action.

(3) Prior to each fuel addition, the control rods will be fully inserted. (In most situations fuel units which are part of control-rod assemblies will be inserted into the core region before any other fuel unit is so inserted. If it becomes necessary to relocate a control-rod assembly in an already assembled array or partially assembled array, sufficient fuel units will be removed from the vicinity of the subject control-rod assembly so that it can be demonstrated that the reactor is subcritical with all the control rods fully withdrawn.)

(4) Following any fuel addition, the effect of the fuel addition will be determined by

withdrawing the control rods. If the assembly is subcritical with the control rods withdrawn to the limit, then a prediction of the critical mass will be made from a plot of reciprocal count rate versus fuel weight (mass of ^{235}U). If, due to some difficulty (for example, instrument malfunction), it is not possible or prudent to withdraw the control rods and determine the condition of the reactor, only two alternatives are allowed.

(a) Remove the last fuel added (returning to a core loading for which the condition was previously determined) and complete the shutdown checklist.

(b) Have the difficulty corrected and any involved system checked out. (If this alternative is selected, a qualified supervisor must remain in the control room or in the office* until the effect of the fuel addition is determined.)

2. Movement of fuel out of the core. It may be necessary during some tests to remove a fuel unit to adjust the core reactivity. [This would normally be followed by insertion of a unit containing more (or less) fuel.]

*Immediately adjacent to the control room.

Therefore, fuel movement of this type (from the core) will be performed by individuals approved to occupy the positions indicated earlier. The procedure to be followed will be essentially that outlined in previous sections in which the duties of the individuals were defined. Written instructions from the supervisor, using the standard transfer memo form (Example 4.5) are first required. The loading supervisor and the fuel handler will then remove the fuel unit to the required storage location. The reactor supervisor or his alternate is not required to be present in the control room during this type of move; however, when the control switch will be in the ON position, the control room must be attended by a qualified member of supervision.

4.6. Core Work - Specific Procedures

4.6.1. Requirements for fuel handling

Fuel handling at the BSR may be defined as the transfer of an identified fuel unit from a specified location and placing it in another specified location without subverting criticality safety and with minimum radiation exposure to personnel. Certainly, no fuel element is ever to be moved to or from the core with the reactor operating. No fuel unit should be moved unless specified by a written order from the reactor supervisor or his designated alternate.

Fuel handling is accomplished by the operating crew under the direct supervision of the supervisor, and each fuel unit

moved must be identified. The supervisor must personally verify the core or storage-rack position receiving each previously identified unit. This procedure will require the supervisor's presence; however, identification of fuel units may be made by an operator, provided the proper identity number is unknown to him beforehand. A minimum of two persons shall be participating in the movement of fuel elements; one of which must be of supervisory rank.

The supervisor's responsibility, as outlined above, may be delegated to no one except another qualified supervisor. A supervisor trainee in final stages of training may be delegated this responsibility if he is an acting supervisor (i.e., with the incumbent serving in caretaker status). At the completion of fuel relocation, a transfer memorandum is prepared by the person who supervised the transfer.

The information on the transfer memorandum should also be recorded in the current BSR log book. The following precautions must be followed during fuel transfer.

1. Vertical movement of fuel units (except when in a shipping carrier) must be performed manually.
2. Health Physics coverage is required when removing a fuel unit shipping carrier from the pool. A crew member or supervisor may monitor the radiation level during fuel transfers within the pool.
3. Fuel units must be handled with tools specifically designed for this work. Hooks without guards which prevent the hook from hitting the fuel plates will not be used except during transfer of depleted fuel elements to the shipping carrier.

4.6.2. Procedure for transferring fuel elements

1. Removal of a standard fuel element from the core

   a. With one of the two tools provided (see Figs. 4.17 and 4.18), engage the handling bar of the fuel element with the tool in the unlatched position. (A knob near the top of the tool will, when raised, unlock the latch mechanism.) When the fuel element has been secured (check visually and physically by rotating the tool), raise the element from the grid plate seat.

   b. Remove the element from the core and identify it. Record all data as requested on the standard fuel transfer sheet.

   c. Transfer the element to its designated position in the storage rack and disengage the tool by raising the actuating knob and then lifting the entire tool from the element.

2. Insertion of a standard fuel element into the core

   a. Engage the handling bar of the fuel element, as described above, and remove the element from the storage rack.

   b. Identify the element to verify the numbers listed in the loading schedule.

   c. Insert the element into the designated core position and visually check to determine proper seating of the end box into the grid plate. (The convex side of the fuel plates faces toward the control room.) If, during the insertion of an

ORNL-PHOTO 92235

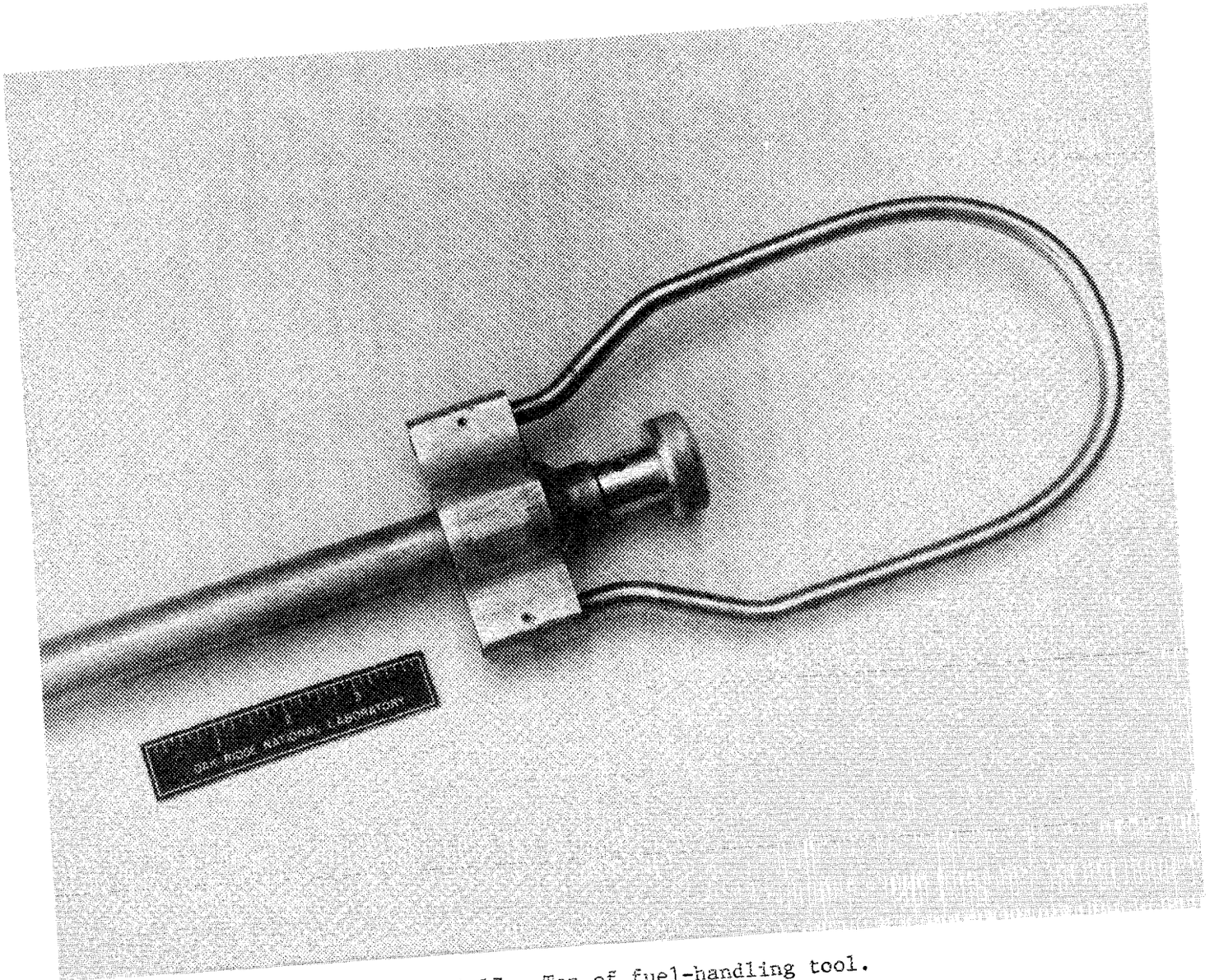

Fig. 4.17. Top of fuel-handling tool.

ORNL-PHOTO 92234

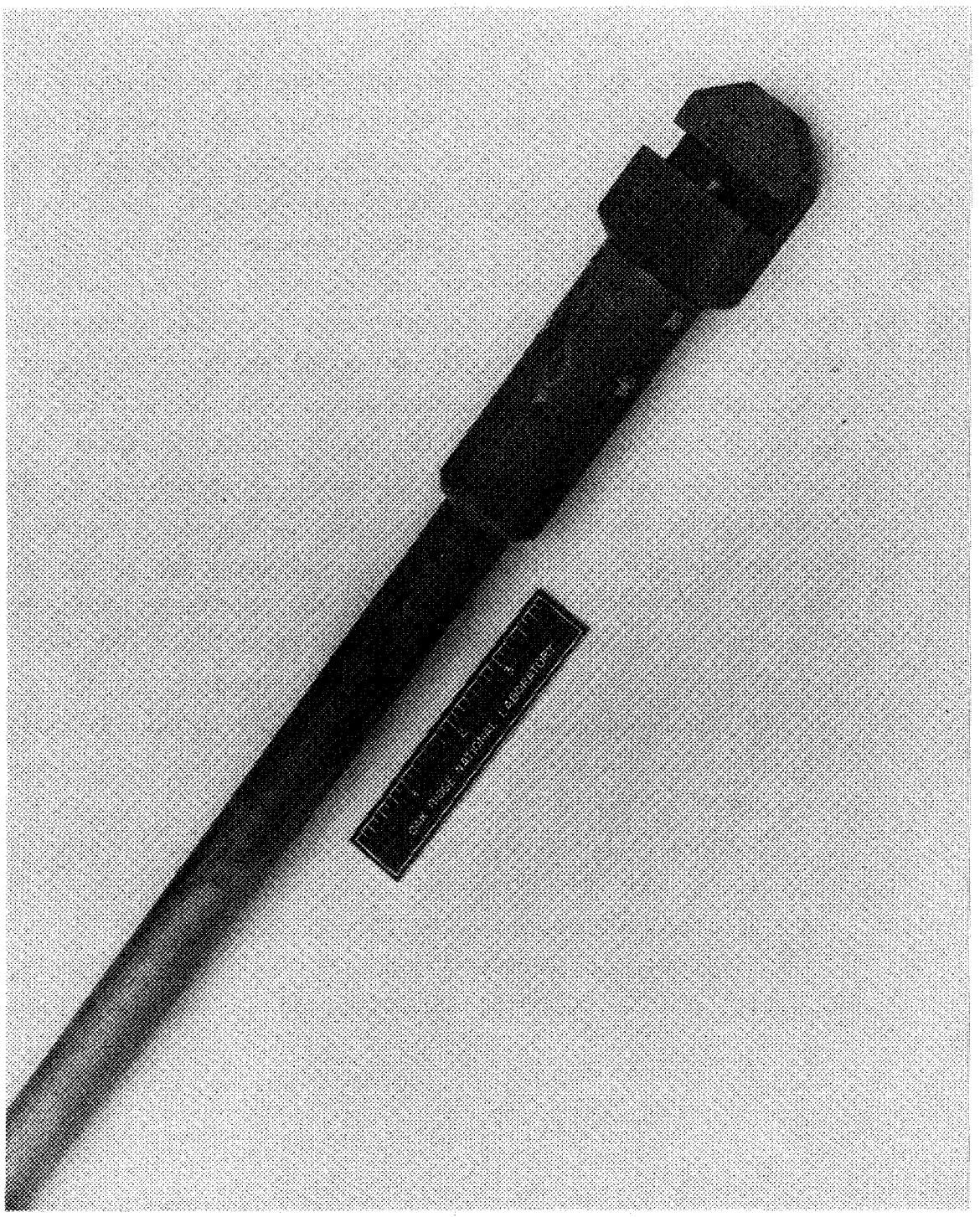

Fig. 4.18. Bottom of fuel-handling tool.

element, abnormal deviations of the counting rate are indicated by the instrumentation, the element should be immediately removed from the core. An evaluation should be made to determine the cause of the deviation noted.

d. Disengage the tool and remove it from the element. Upon completion of the fuel transfer, all fuel tools should be locked to the reactor bridge.

4.6.3. Procedure for transferring a shim-rod assembly

The shim-rod assembly includes the shim-rod drive unit, guide tube, shim-rod, and shim-rod fuel element. Normally, the transfer of a shim-rod assembly will be required only for maintenance or operations such as: replacement of the seat switch mechanical linkage; replacement of the shim-rod fuel element; temporary removal of the poison rod for physical checks or repairs; or transfer to a new core location. Due to the design of the BSR shim-rod assemblies, the same procedure must be followed before any of these objectives can be achieved. The appropriate section of the BSR Check Sheet for Inspection of Shim-Rod Drive, Shim-Rod, Guide Tube, and Seat Switch Assemblies (Example 4.2) will be completed.

The term "shim-rod assembly" is intended to describe all parts from the drive motor and limit-switch subassembly to the shim-rod fuel element.

The term "shim-rod drive unit" is intended to describe all parts of the "drive assembly" except for the guide tube, the control-rod element, and the control rod itself.

The appropriate part of "Procedure for Working a Shim-Rod Assembly" will be completed and filed with the shutdown folder.

1. Removal and transfer of a shim-rod assembly

   a. Sufficient fuel units must be removed from the vicinity of the subject shim-rod assembly so that it can be demonstrated that the reactor is subcritical with all control rods fully withdrawn. (If the subject control rod cannot itself be withdrawn, the results of withdrawal of the other five control rods should be used as a guide to further action. The BSR supervisor should be informed of this situation.)

   b. Using the raise mode, withdraw the rod-drive unit to the withdraw limit, i.e., with the reactor in the scram condition.

   c. Disconnect the signal-and-motor-lead connector.

   d. Attach a lifting jig to the assembly just below the drive motor. This should be attached so as not to damage the seat-switch lead. (NOTE: This procedure describes the removal of the drive assembly as a unit. However, in the majority of cases it is desirable initially to remove and store the drive motor and attached magnet before removing the guide tubes and the attached fuel element which contains the neutron-poison rod. In this case, complete procedures 4.6.4 and 4.6.5.)

   e. Position the overhead-crane hook over the top of

the drive assembly at a height suitable for attaching the cable being used.

f. Detach the drive assembly from its hold-down arm. (During this step, the drive assembly and any other drive assemblies fastened to the hold-down arm must be held in place manually.)

g. Station a man at the overhead crane breaker box. (This step is required during all times when the crane hook is to be raised or lowered with potentially highly radioactive components attached to the hook.)

h. Manually lift the shim-rod assembly until it is free of, and on top of, the grid plate.

i. Place the loose end of the lifting cable over the crane hook.

j. Raise the crane hook until the choker is no longer slack.

k. Move the assembly with the crane and with manual guidance to the desired location which is usually to another core position.

l. Install the shim-rod-assembly in the desired location with manual guidance.

m. Remove the lifting jig and secure the shim-rod-assembly into position.

4.6.4. Procedure for working a shim-rod-drive unit

Normally, removal of the shim-rod-drive unit will not be required except for replacement or re-adjustment of the clutch switch, cleaning the magnet face, or replacement of the magnet subassembly.

1. Removal of a drive unit

   a. Since the poison unit will not be removed, no change in core loading will be required.

   b. Using the raise mode, withdraw the rod-drive unit to the withdraw limit, i.e., with the reactor in the scram condition.

   c. Disconnect the signal-and-motor-lead connector.

   d. Disconnect the upper seat-switch-lead connector.

   e. Remove the screws which attach the drive unit to the upper guide tube.

   f. Manually lift the drive unit until the motor housing and the upper junction box are free of the upper guide tube. Install the lifting jig for the drive assembly.

   g. Station a man at the overhead crane breaker box. (This step is required during all times when the crane hook is to be raised or lowered with potentially highly radioactive components attached to the hook.)

   h. Position the crane hook directly above the drive to be removed, and place the lifting-jig cable loop on the hook.

   i. Raise the crane hook until the choker is no longer slack.

   j. Manually guide the drive unit (while at the same time raising it with the crane) until it is free of the upper guide tube. (Using rags, wipe the water from the unit as it is raised).

k. Slowly move the unit to the location desired. Surveillance by Health Physics personnel is required for this step.

l. Perform work on the drive unit as required.

2. Insertion of a drive unit. This procedure is, in all general details, the reverse of the procedure for removal of a shim-rod-drive unit.

4.6.5. Procedure for working a shim-rod assembly

1. Removal of a shim-rod assembly

a. Sufficient fuel units must be removed from the vicinity of the subject shim-rod assembly so that it can be demonstrated that the reactor is subcritical with all control rods fully withdrawn. (If the subject control rod cannot itself be withdrawn, the results of withdrawal of the other five control rods should be used as a guide to further action. The BSR supervisor should be informed of this situation.)

b. Using the raise mode, withdraw the rod-drive unit to the withdraw limit, i.e., with the reactor in the scram condition.

c. Disconnect the signal-and-motor-lead connector and the seat-switch lead wires.

d. Remove the shim-rod-drive unit as outlined in Procedure 4.6.4.

e. Attach a choker assembly (bolt and choker) to the upper guide tube utilizing two of the screw holes.

f. Position the overhead-crane hook over the top of

the drive asembly at a height suitable for attaching the cable being used.

g. Detach the drive assembly from its hold-down arm. (During this step, the drive assembly and any other drive assemblies fastened to the hold-down arm must be held in place manually.)

h. Station a man at the overhead crane breaker box. (This step is required during all times when the crane hook is to be raised or lowered with potentially highly radioactive components attached to the hook.)

i. Manually lift the shim-rod assembly until it is free of, and on top of, the grid plate.

j. Place the loose end of the lifting cable over the crane hook.

k. Raise the crane hook until the choker is no longer slack.

l. Move the assembly with the crane and with manual guidance to the vicinity of the special storage rack on the east wall of the pool.

m. Disconnect the bracket (mark location of bracket before disconnecting) for the seat-switch-actuator rod and disconnect the cable-rod assembly from the upper portion of the guide tube. Roll the cable into a neat coil for ease of handling as the assembly is raised in the next step.

n. With Health Physics surveillance, place the assembly into the special storage position in the work platform.

o. Unscrew the flange-retaining screws, and remove the upper guide tube to storage.

p. With the special magnet and power supply, remove the poison rod from the control-rod element and the lower guide tube. Attach the poison rod to the poison-rod tool. [If the control-rod-drive assembly was removed for physical checks of the poison rod, these checks can be accomplished without proceeding further with this specific procedure (complete appropriate section of Section 4.6.5); otherwise, continue to the next step for the replacement of a seat switch mechanical linkage and/or replacement of a shim-rod fuel element.]

q. Install a large hose clamp near the top of the lower guide tube to secure the seat-switch mechanical linkage.

r. Working down through the lower guide tube, unscrew the control-rod-element retaining screws. The lower guide tube may then be removed from the control-rod element. (Now, the remaining two possible objectives, replacement of the seat switch mechanical linkage or replacement of the control-rod fuel element, may be accomplished.)

2. Assembly and insertion of a drive assembly. This procedure is, in all general details, the reverse of the procedure for removal and disassembly of a control-rod drive assembly.

4.6.6. Inspection of shim-rod drive, shim rod, guide tube, and seat switch assemblies

Shim-rod drive assemblies and component parts will be routinely inspected periodically as outlined in Example 4.2 in the "BSR Operating Manual." The same inspection procedure is to be used following any maintenance or changes on the assemblies. Upon completion of an inspection, the inspection forms will be filed in the "Shim Rod Maintenance and Inspection Notebook" located at the BSR.

BSR CHECK SHEET FOR INSPECTION OF SHIM-ROD DRIVE, SHIM ROD, GUIDE TUBE, AND SEAT SWITCH ASSEMBLIES

Date: _____

Core Position: CP _____, No. _____ Shim rod,

shim-rod fuel element No. _____

I. Shim-Rod Drive Assembly

Initials

_____ A. Motor number _____

_____ B. Motor operation _____

_____ C. Clutch switch cleaned and inspected

Remarks _____

_____

_____

_____ D. Clutch switch adjustment _____-in.

Remarks _____

_____

_____

_____ E. Clutch switch lead wires inspected

Remarks _____

_____

_____

_____ F. Magnet number _____

_____ G. Magnet cleaned and inpsected

Remarks _____

_____

Example 4.2.

II. Shim-Rod Assembly

Initials

_____ A. Shim-rod assigned number BS-_____

_____ B. Visual inspection (flat and edge sides)

NOTE: Identify each side

Numbered flat side BS-_____ TOP

Remarks _____

_____

_____

_____

_____

_____

_____

_____

Non-numbered flat side TOP

Remarks _____

_____

_____

_____

_____

_____

_____

Example 4.2. (continued).

Initials

_____ C. Straight edge inspection (edge sides)

_____

Numbered flat side up BS-_____ TOP

_____

_____ D. Straight edge inspection (flat sides)

_____

EDGE side up Numbered side TOP

_____

_____ E. Dimension check (flat and edge sides)

Flat Side

Location	0.875 (in.)	Oversized Gauge (in.)	Gauge Size (in.)	Feeler Gauge (in.)	Size of Shim-rod (in.)
Bottom		+	=	-	=
Middle		+	=	-	=
Top		+	=	-	=

Remarks _____

_____

_____

_____

_____

Example 4.2. (continued).

Edge Side

Location	2.250 (in.)	Oversized Gauge (in.)	Gauge Size (in.)	Feeler Gauge (in.)	Size of Shim-rod (in.)
Bottom	+	=	-	=	
Middle	+	=	-	=	
Top	+	=	-	=	

Remarks _____

_____

_____

_____

_____

_____ F. Armature cleaned and inspected

Remarks _____

_____

III. Guide Tube and Seat Switch Assembly

_____ A. Seat switch assembly inspection

1. Seat switch spring _____-in. compressed

2. Seat switch gap _____-in.

Remarks _____

_____

_____

_____ B. Guide tube brushed and flushed

Remarks _____

_____

Example 4.2. (continued).

_____ IV. Installation in Core Completed

Date Completed _____

BSR Supervisor _____

I&C Engineer _____

Maintenance
Personnel _____

_____

_____

_____

Operators _____

_____

Example 4.2. (continued).

4.7. Moving the Reactor Assembly

4.7.1. Requirements

Prior to the movement of the reactor to a new location (i.e., a position adjacent to, or in the proximity of, any materials, other than light water, of which the exact magnitude of the reactivity effect is unknown), a procedure will be prepared for removing a sufficient number of fuel elements, experiments, and/or other components and materials and for reloading these in an approach-to-criticality procedure (if required). These procedures require the approval of the reactor supervisor or his designated representative and, in some cases, approval of the Technical Section. The reactor may be repositioned to a previously used configuration under the direction of a qualified supervisor. NOTE: The reactor must be in a shutdown state prior to any repositioning (see Fig. 4.19 for details of the reactor bridge).

4.7.2. Operational procedures

1. Check the following:
   a. Proximity of the reactor to other fueled materials.
   b. The condition of all experiments, in particular any connections between the reactor and experiments other than those which are designed to be moved as a consequence of movement of the reactor.
   c. The mechanical "stops" on the bridge for possible damage.
2. If the reactor is being moved to a position different from any previously occupied, then the count-rate

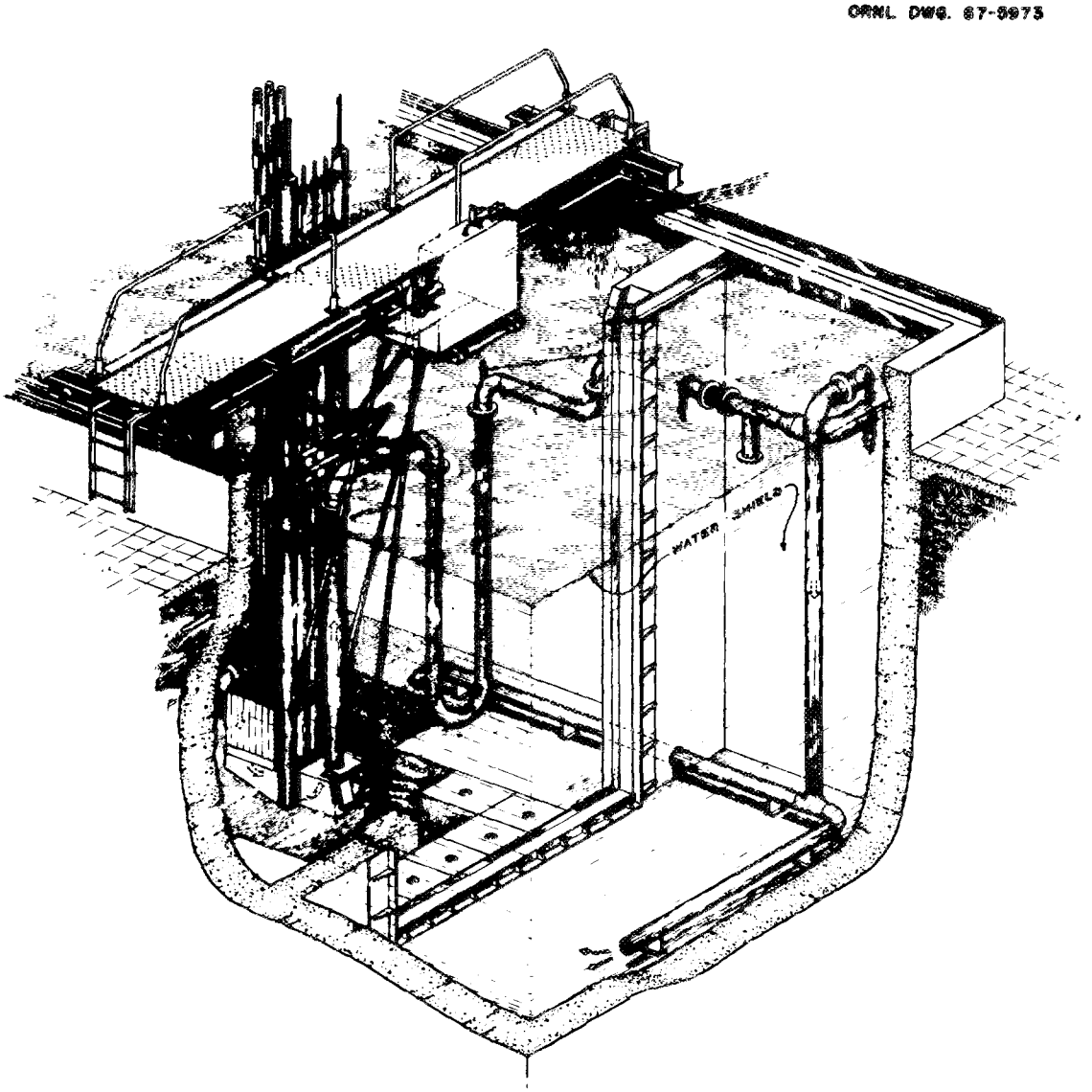

Fig. 4.19. Isometric drawing of the BSR.

instrumentation should be watched throughout the operation. This may be accomplished by observation from the local panel, by use of the TV monitors at the remote panel, or by audible means if available. The person assigned to the job of observing the count-rate instrumentation would, of course, notify the personnel moving the reactor of any observed change in counting rate.

3. Loosen all the bolts on the swivel flange for the exit water line. (This step is not necessary if the required movement is only in the east-west direction and is less than 3-ft.)
4. Loosen the two securing bolts on each side of the bridge (use the T-handle tool located on the bridge).
5. Unlock and remove the lock on the bridge-gear controls (located at the west end of the bridge) and lock on the carriage-gear controls (located at the east side of the carriage).
6. To move the reactor in the north-south direction, rotate the handle on the west side of the bridge as needed.
7. To move the reactor in the east-west direction, place the wheel-handle tool on the gear pin at the east side of the carriage and rotate the handle as needed.
8. As the reactor is repositioned, the flexible piping should be moved as needed to avoid damage to the piping.
9. After the reactor has been repositioned, attach the locks and secure the gear controls.
10. Tighten the securing bolts on both sides of the bridge.
11. Tighten the bolts on the swivel flange.

4.8. Fuel Accountability

4.8.1. Introduction

The records that are maintained on fuel units (fuel elements or control-rod elements) are as follows:

1. Fuel-accountability ledger books are maintained with individual fuel-unit ledger sheets filed in sections according to unit location, i.e., core, vault, or pool. These sheets contain the past and current inventory of total uranium, ^{235}U, and ^{236}U. Each section of the ledger has a master control sheet showing the total inventory of uranium and ^{235}U in that location.
2. A fuel-inventory card file is also maintained. A card for each fuel unit shows the past and current ^{235}U inventory and is filed in sections according to location, i.e., pool or core (Example 4.3). These two sections are divided into subsections according to the ^{235}U inventory; e.g., all units containing 140 g of ^{235}U would comprise one subsection.
3. Tags bearing individual unit-identity numbers are kept on location-indication boards which graphically display the core, pool storage racks, etc. (see Fig. 4.20).
4. A notebook is also maintained in the control room containing all core configurations used in the past. (The standard form is shown in Example 4.4.) The most recent form is to be checked for possible changes and for conformity with the identification tags on the board at poolside prior to starting up the reactor.

ORNL-PHOTO 93846

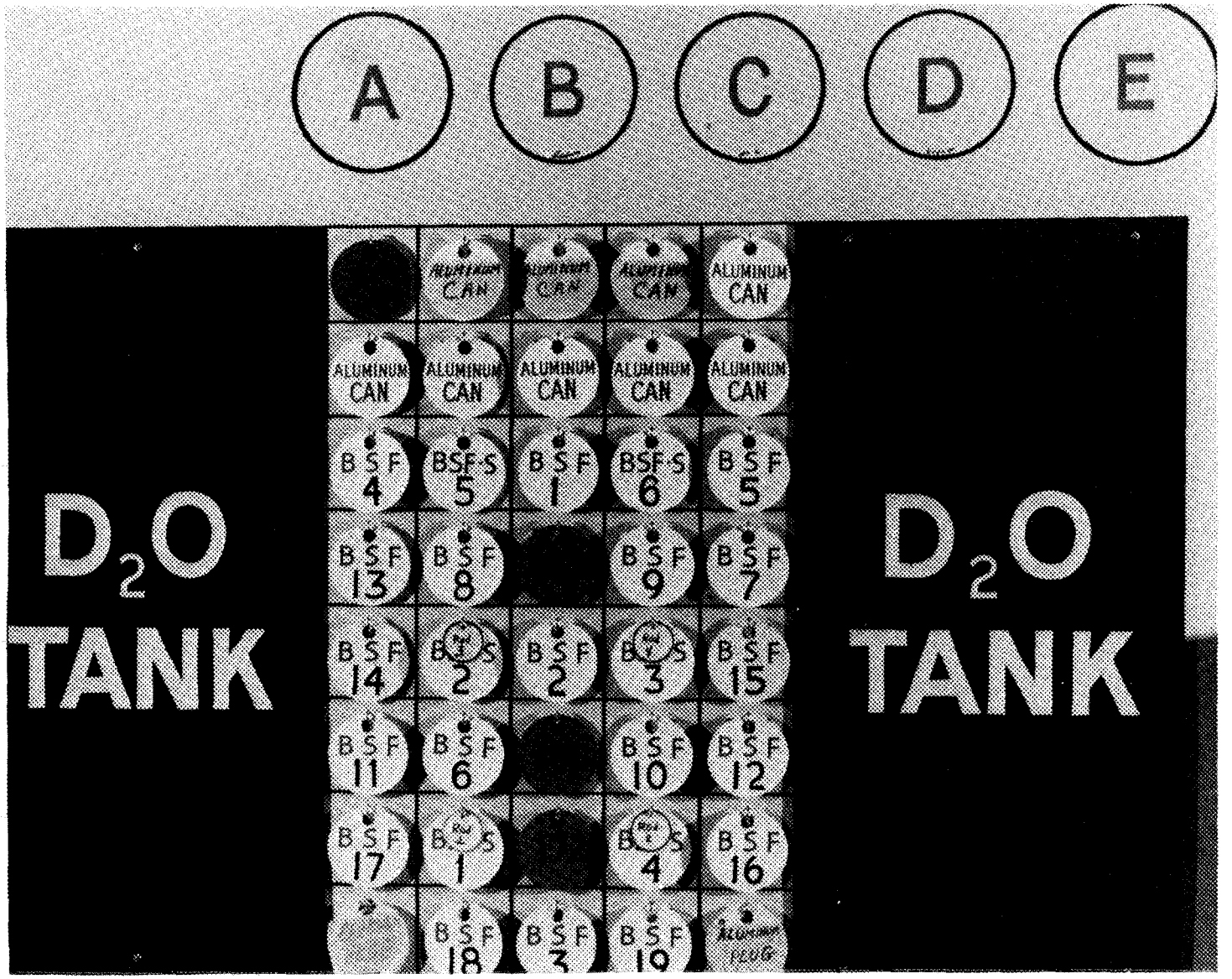

Fig. 4.20. BSR core configuration board.

FUEL RECORD

UCN-7453
(3 4-66)

ELEMENT NO

DATE	^{235}U	DATE	^{235}U	REMARKS

Example 4.3.

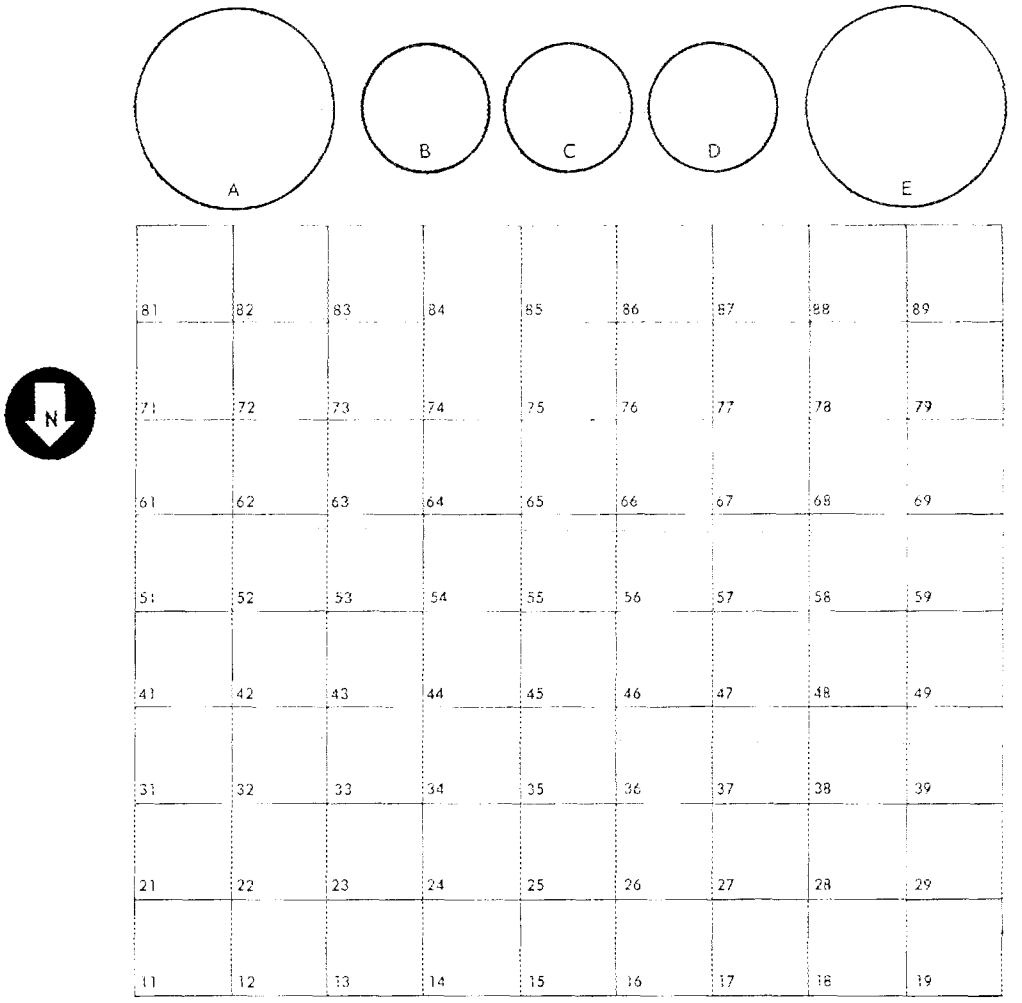

BSR CORE

LOADING NO.

DATE

EXCESS REACTIVITY

OPERATING MASS

ROD POSITIONS AT CRITICAL
(With Operating Mass)

ROD NO.	IN. WITHDRAWN
1	
2	
3	
4	
5	
6	

REMARKS.

UCN-8594
(3 7-78)

Example 4.4.

5. Fuel transfer memos, Example 4.5, are used whenever fuel elements are moved from one location to another in the reactor pool.

4.8.2. Responsibility and procedure for maintaining records

Accountability records are maintained by the BSR sub-balance area representative under the supervision of the balance area representative for code 20, the balance area for the Reactor Operations Section, Operations Division (the ORNL Accountability Office is code 1).

Accountability records are maintained in the following manner:

1. At the end of each month, the current inventories of uranium and ^{235}U are compiled and reported to the balance area representative, who, in turn, forwards this information to the ORNL Accountability Office [forms UCN-2676 (Example 4.6) and UCN-3683 (Example 4.7)] in triplicate.
2. For transfers between balance areas or sub-balance areas, form UCN-2681 (Example 4.8), in triplicate, is used. (An exception to this procedure is that this form is required for transfers from the ORR vault to the BSR pool or core, even though all three locations are in the same sub-balance area.)
3. For transfers within the BSR sub-balance area, form UCN-1909A (Example 4.5) is used. The form is filled out by the shift engineer in charge of the actual transfer and is sent to the sub-balance area representative. Information required for each unit transfer is:

TRANSFER MEMO

FROM | DATE

TO | SHIFT

SOURCE	TYPE UNITS	NO. UNITS	RECEIVER	REMARKS

UCN-19094
(3 10-82)

Example 4.5.

MONTHLY INVENTORY WORK SHEET FOR _____ a

MATERIAL BALANCE AREA REPRESENTATIVE b	MATERIAL BALANCE AREA CODE d	CONTROL AREA f
INVENTORIED BY c	DATE INVENTORIED e	REPORTING UNITS g

ITEM NO. BATCH NO. h	CHEM. OR PHY FORM i	TAMPER SEAL NO. j	CONT. NO. k	GROSS WT. l	NET WT. m	SS NET WT. n	ISOTOPE WT. o	ASSAY p	MEAS. METHOD CODE q	SPECIFIC LOCATION OF MATERIAL r	REMARKS s

DISTRIBUTION:
WHITE - Accountability Office
CANARY - MBA Representative
BLUE - Originator

MEASUREMENT METHOD CODES:
A - Piece or container count; B - Weighed value;
C - Supported by analytical measurements; D - Check Security Seal; E - NDA Equipment; F - Other _____

SIGNED

UCN-2676
(3 3 79)

Example 4.6.

CONSOLIDATED MONTHLY INVENTORY

FOR MATERIAL BALANCE AREA ..... AS OF .....

MATERIAL	INVENTORY PER MBA			INVENTORY CONTROL (PER ACCT. OFFICE)		INVENTORY DIFFERENCES (+) PLUS (-) NEGATIVE	
	METHOD B Book P Phys	SS NET	ISOTOPE	SS NET	ISOTOPE	SS NET	ISOTOPE
DEPLETED URANIUM							
ENRICHED URANIUM							
$<$20% U-235							
$\geq$ 20% U-235							
PLUTONIUM-242							
AMERICIUM - 241							
AMERICIUM - 243							
CURIUM							
BERKELIUM							
CALIFORNIUM							
PLUTONIUM							
LITHIUM-6							
URANIUM-233							
NORMAL URANIUM							
NEPTUNIUM-237							
PLUTONIUM-238							
DEUTERIUM-GAS							
D_2O HEAVY WATER							
TRITIUM							
THORIUM							

EXPLANATION OF DIFFERENCES (PER ACCTG. OFFICE)

DISTRIBUTION:
WHITE - ACCOUNTABILITY OFFICE
CANARY - MBA REPRESENTATIVE

UCN-3683
(3 3-79)

Example 4.7.

EXPLANATION OF DIFFERENCES: _____
(PER MBA)

_____

_____

_____

_____

_____

1. Are all containers properly labeled as to: (a) Material type? YES ☐ NO ☐ (b) Drum, box, bottle, or container number? YES ☐ NO ☐

   (c) Gross, tare, and net weights? YES ☐ NO ☐ (d) SS net weight and % U^{233} or U^{235}? YES ☐ NO ☐ (e) Analytical data expressed in g/g or mg/ml? YES ☐ NO ☐

   (f) Date analyzed and analytical date report number? YES ☐ NO ☐

   If any of the above are NO, explain why _____

2. Are laboratory reports and weighing data on file to support measurement data reflected in the inventory method on reverse side and also in item 1 above? YES ☐ NO ☐

3. Can items in inventory be traced through the records to this material balance report? YES ☐ NO ☐. If NO, why? _____

4. Does each individual possessing SS materials have an itemized listing of all materials in his possession? YES ☐ NO ☐. If NO, why? _____

5. Describe exact method of inventory if measurements other than analysis, weight, or volume measurements were used. Explain why more precise methods were not used: _____

6. On irradiated materials which may not be amenable to measurements, are up to date records of material quantities, container or bin number and storage facility layouts available? YES ☐ NO ☐. If NO, why?

   _____

   When will these materials be measured? _____

INVENTORIED BY _____
(Signature Required)

INVENTORY ATTESTED:

_____
(Signature of Supervisor Required)

Example 4.7. (continued).

ORNL NUCLEAR MATERIALS INTRA-LABORATORY TRANSFER

DATE 1	TRANSACTION TYPE 2	TRANSACTION NO. MC- 5808

	MBA 3	CONTROL AREA 4	MBA REPR. SIGNATURE 5	NM MGMT. AUTHORIZED 6	PURPOSE OF TRANSFER-TRANSACTION 7
FROM					
TO				NM MGMT. REVIEWED	

LINE	ITEM NUMBER 8		PROJECT NO. 9	M/T 10	C/P 11	OWNER CODE 12	PIECE NO. 13	COUNTRY OF ORIGIN 14	GROSS WT. (lbs.) 15	MAT'L NET WT. 16	ELEMENT WEIGHT 17	WT. % ISOTOPE 18	ISOTOPE WEIGHT 19
	FROM	TO											
1													
2													
3													
4													
5													

LINE	LIMITS OF ERROR 20		WPAS NO. 21	DATE EXP. TO RETURN 22	I/C 23	S/C 24	MEASUREMENT 25		ANALY. REPORT NO. 26	ASSAY REPORT NO. 27	TAMPER SEAL NO. 28	CONT. NO. 29
	ELEMENT	ISOTOPE					DATE	METH.				
1												
2												
3												
4												
5												

LINE	PERTINENT COMMENTS 30
1	
2	
3	
4	
5	

DISTRIBUTION: White - Accountability Office
Canary - Receiver
Blue - Shipper

UCN-2681
(3 3-79)

Example 4.8.

a. Source - former location of unit.

b. Unit number - fuel-element, shim-rod, or fission-chamber identity number.

c. Receiver - new location.

d. Remarks - additional information as may be requested such as condition of element, radiation level external to shipping casks, etc.

4.8.3. Procedure for calculating consumption of uranium

Normally, ^{235}U consumption by neutron absorption is not considered for small items, e.g., fission chambers, foils, etc. In fuel elements and control elements, the consumption of ^{235}U by neutron absorption is calculated due both to fission (burnup) and neutron capture (^{236}U formation).

Following any partial or complete reloading of the reactor, the number of kWh accumulated during the preceding period of reactor operations is obtained from the BSR log book. With this information, the number of grams of ^{235}U consumed may be computed as follows:

$$\text{Grams } ^{235}U \text{ fissioned} = (\text{kWh}/24) \times 1.07 \text{ g } ^{235}U/1000 \text{ kWh-day}$$

Since the consumption of ^{238}U and ^{236}U is negligible in BSR fuel elements, the consumption of ^{235}U due to fission is equal to total loss of uranium.

Next, the fraction of the total uranium consumption (burnup) is calculated for the individual element. This fraction is called the burnup factor (BF) and is defined as:

$$BF = \frac{\text{Average flux in fuel unit}}{\text{Average flux in core}} \times \frac{^{235}U \text{ in fuel unit}}{^{235}U \text{ in core}}$$

Following this, the burnup factors are multiplied by the previously calculated burnup to determine the burnup per element during the previous operating period. The current burnup is then subtracted from the uranium content of the element at the start of the operating period to obtain the current uranium content. A new total burnup is computed by adding the current burnup to the previous total burnups.

To calculate the current production of ^{236}U, the current burnup is used in the following formula:

$$\text{Grams } ^{236}U \text{ produced} = (0.183 \text{ g } ^{236}U/\text{g burnup}) \times \text{grams burnup}$$

The number thus obtained plus the current burnup is subtracted from the ^{235}U content of the element at the start of the operating period to obtain the current ^{235}U content. To obtain the new total ^{236}U production, the new total burnup is used in the above equation.

To calculate the burnup of the individual fuel elements by hand is time consuming; therefore, the Laboratory's Computing Center is utilized for calculating the burnup. The necessary information is entered on form UCN-14741 (Example 4.9). The printout sheet from the computing center is usally returned within the same day to the sub-balance area representative.

The current burnup, new total burnup, uranium content, ^{235}U content, and ^{236}U production are recorded in the ledger book.

It should be noted that numerous checks must be made by the sub-balance area representative to prevent cumulative-type errors.

FUEL BURNUP SHEET

REACTOR: ORR = 1, BSR = 2

CYCLE	NO. OF ELE.	MEGAWATT HOURS	LAB.	DIS. CARDS	NEW	HISTORY	DATE IN	DATE OUT	DAY IN	DAY OUT	REACTOR

POS.	ELEMENT	FLUX	TOTAL U	U-235	BCF	CONDITION
1 2	3 4 5 6 7 8 9 10	11 12 13 14 15	16 17 18 19 20 21 22	23 24 25 26 27 28 29	30 31 32 33 34	35 36 37 38 39 40 41 42 43 44 45 46

UCN-14741
(3 6-82)

Example 4.9.

5. EXPERIMENTS

5.1. Introduction

Although the BSR was originally built to study radiation shielding, its high degree of accessibility makes it ideal for performance of a wide variety of experiments. The experiment facilities currently in use are described briefly in the following sections. The shift supervisors and operators should become familiar with the services required by each experiment.

An experiment is defined as an irradiation for the production of data. A target or sample, by contrast, is a quantity of an element or compound usually very carefully prepared, which will be irradiated to produce a transmutation.

5.2. Experiment Facilities

5.2.1. Thermal-neutron-irradiation facility (East D_2O tank)

1. References

   a. Drawings:

   SSD-D-1562-4A, NTD/BSR Irradiation Facility Assembly

   b. Reports:

   C. E. Klabunde and B. C. Kelley, "Irradiation Facilities in the Oak Ridge National Laboratory Bulk Shielding Reactor", International Symposium on Developments in Irradiation Capsule Technology, Held at Pleasonton, California, May 3-5, 1966, TID-4500 (CONF-660511), paper 8.7 (March 1967)

   W. H. Tabor, "A D_2O Tank as an Irradiation Facility at the BSR," Conference on Reactor Operations Experience, Oct. 1-3, 1969, Reactor Operations Division American Nuclear Society Transactions.

2. Purpose. The purpose of this facility is to provide readily available space for irradiating material in a well-thermalized neutron flux.

3. Brief description. Figure 5.1 shows the facility as installed on the east side of the BSR. Figure 5.2 and Table 5.1 illustrate the important dimensions of the facility. Typical neutron flux data are given in Table 5.2. The facility has sample tubes with diameters of 3, 4, and 6 in. Two sample tubes are

ORNL-PHOTO 0559-82

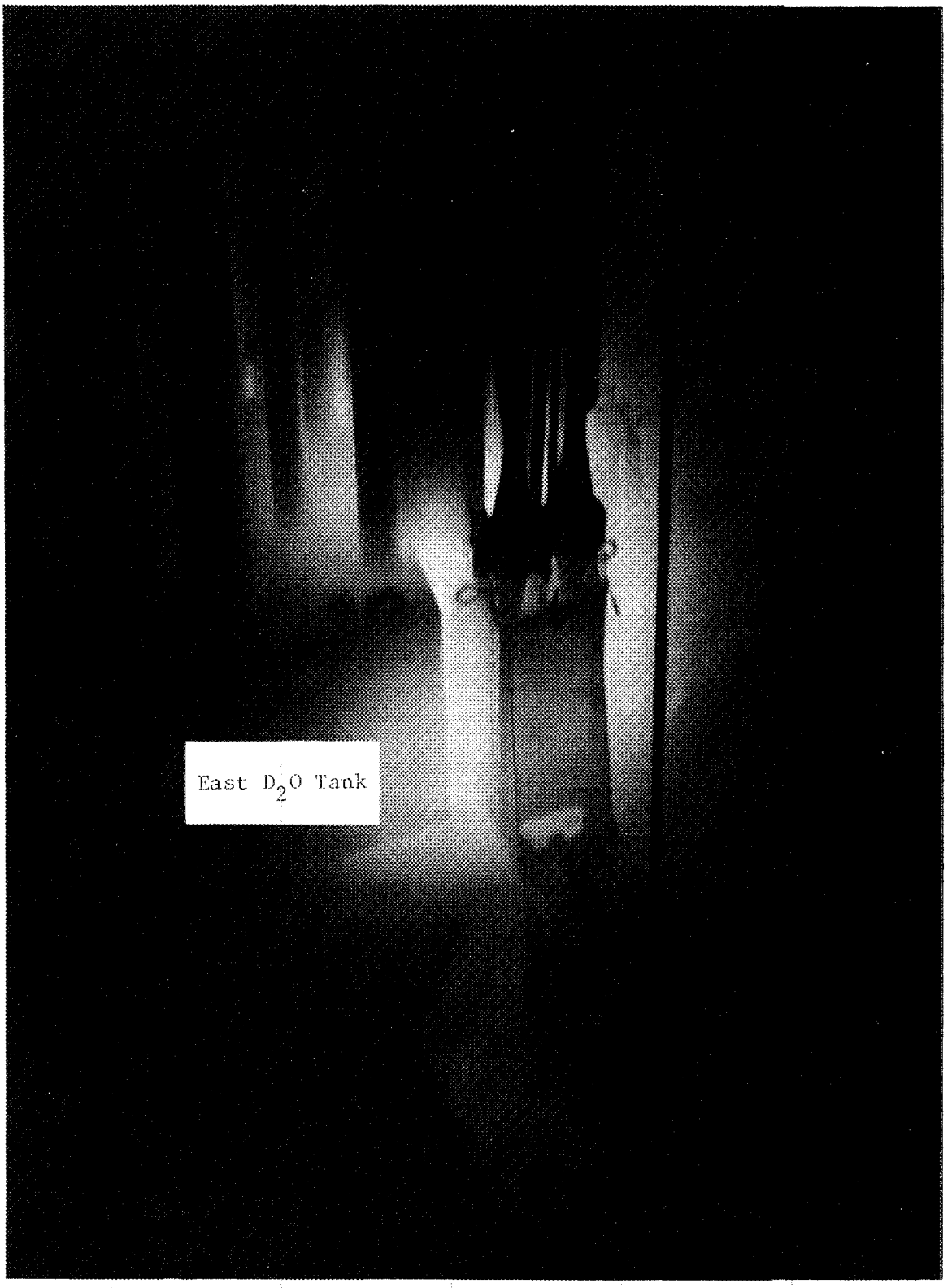

Fig. 5.1. Thermal neutron irradiation facility.

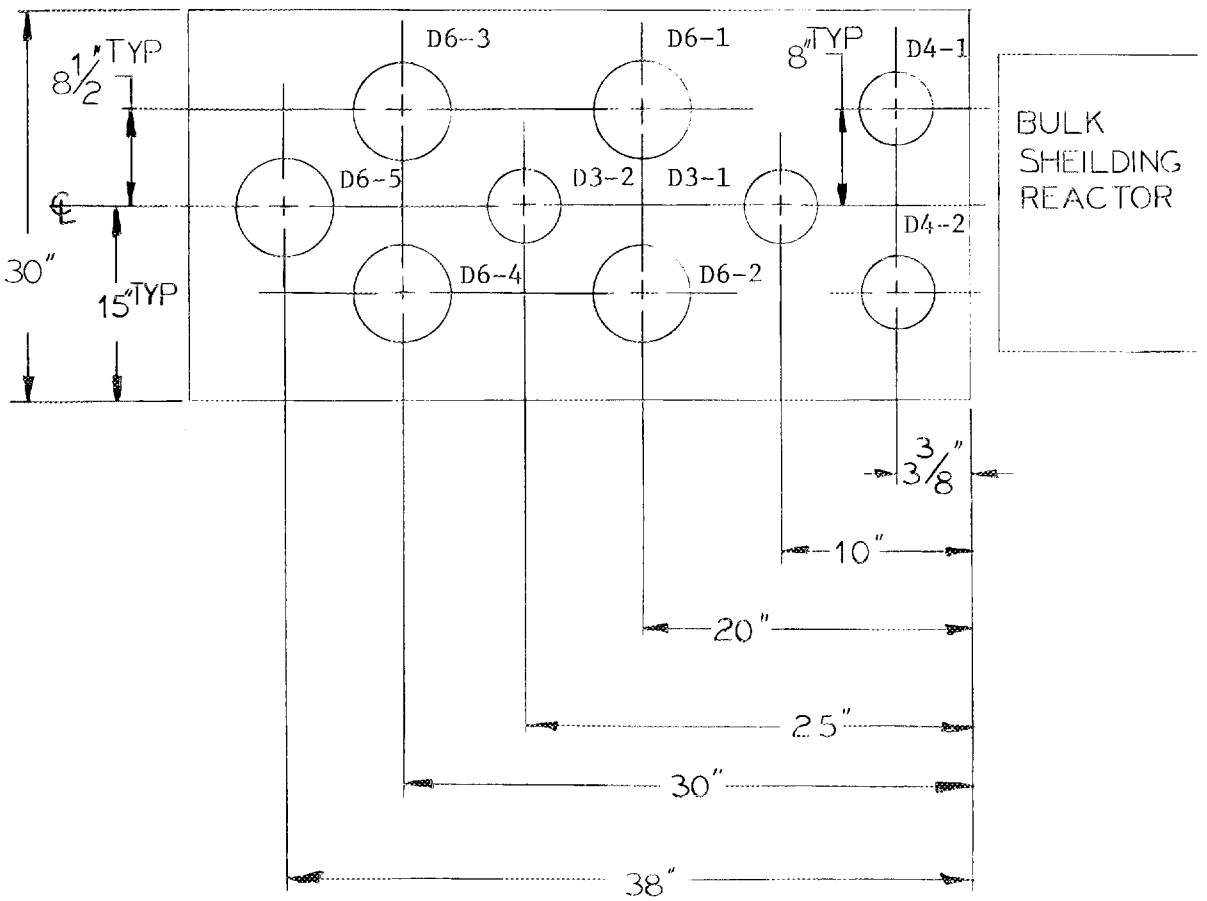

Fig. 5.2. Thermal neutron irradiation facility.

Table 5.1. Distance from the bottom of the East D_2O tank sample tubes to the reactor horizontal centerline.

Tube number	Distance (in.)
D4-1	11
D4-2	11
D3-1	11
D3-2	31
D6-1	31
D6-2	31
D6-3	31
D6-4	31
D6-5	31

Table 5.2. Neutron-flux and gamma data measured in certain BSR irradiation facilities at 2 MW

Facility or sample tube position	Fast neutron flux*	Thermal neutron flux	Gamma heat (watts/g)
Liquid helium cryostat	2×10^{11} (S)	1.5×10^{12}	0.099
Core-position-15 tube	1.7×10^{12} (N)	1.3×10^{13}	0.2
Thermal Neutron Irradiation Facility (D_2O Tank)			
D4-1, D4-2	1.3×10^{12}	8.9×10^{12}	
D3-1	1.2×10^{11}	9.9×10^{12}	
D3-2	2.3×10^{9}	1×10^{12}	
D6-1, D6-2	1×10^{9}	8.1×10^{11}	

*Fast neutron detectors - (S) = Sulfur and (N) = Nickel

dry tubes D3-1 and D3-2, and the remaining tubes are wet tubes because the top of each tube is open to the pool. The upper portions of the dry sample tubes are offset from the bottom portions of the tubes to eliminate direct radiation beams from the reactor. Tubes D4-1, D4-2, and D3-1 extend down only to the top of the grid plate and the remaining tubes extend approximately 20-in. below the top of the grid plate and the bottom of the facility.

The walls of the facility tank are constructed of 1/2-in. thick 6061-T6 aluminum. The facility tank is 30-in. wide, 45-in. long, and 32-in. high. The tank is positioned by two footpieces on its west end which fit into a bracket fastened to the east edge of the reactor grid plate; the tank is supported by two steel cables which are fastened to a rolling support mechanism which is, in turn, supported by the reactor bridge. The support mechanism is attached to the reactor carriage, and movement of the latter will cause an equal movement of the former; thus, the tank is repositioned with the reactor.

The west wall of the tank is about 1/4-in. east of the nearest edges of the reactor fuel elements. Reactivity measurements indicate that complete removal of the tank would cause a change in reactivity of $-0.75\%\ \Delta k/k$.

4. Routine checks. A 1/2-in. aluminum tube extends from the top of the tank between sample tubes D6-1 and D6-2 to above the pool water surface. A plastic tube attached to this 1/2-in. tube enters the top and extends to the bottom of a heavy-walled polyethylene bottle which contains D_2O. This polyethylene bottle, which provides an expansion volume for the tank is located just east of the east working platform. As depicted in Fig. 5.3, an off-gas hood containing a drierite-filled bottle is connected to the top of the polyethylene bottle.

   Once per shift, the level in the bottle will be visually checked to determine that it is neither too low nor too high. Once per week the condition of the drierite is checked.

5. Instrumentation. Although instrumented samples may at times be installed in this facility, no instrumentation is associated with the facility itself.

6. Installation and removal procedures. This facility is intended to be a permanently installed feature of the reactor. Installation or removal of this facility constitutes a major operation and causes a significant change in reactivity; therefore, a special procedure would have to be written. This procedure would require review and approval as described in Section 4.5.

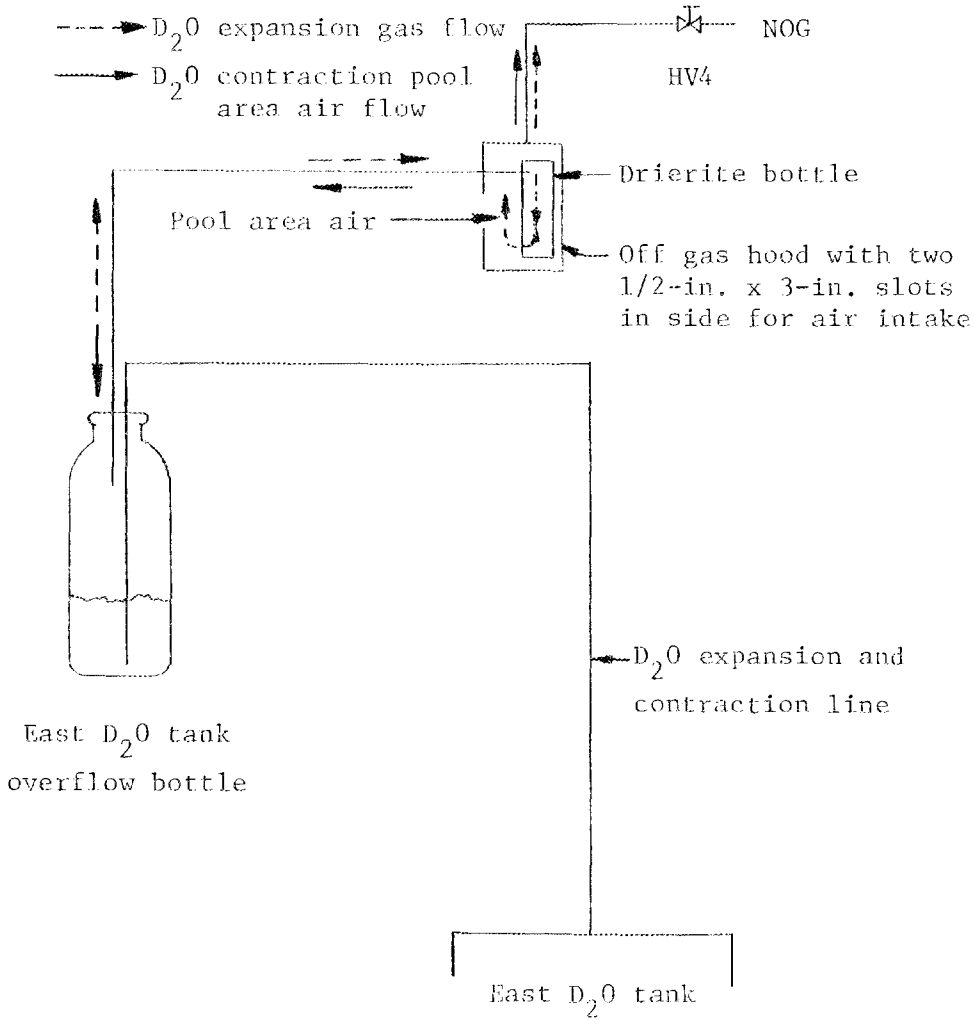

Fig. 5.3. BSR D_2O off-gas system.

5.2.2. West D_2O Tank

1. References

   a. Drawings:

      M 20310 EJ 009, Low Temperature Experiment - D_2O Box

      M 20310 EJ 010, Low Temperature Experiment - D_2O Detail Sheet 1

      M 20310 EJ 011, Low Temperature Experiment - D_2O Detail Sheet 2

      M 20310 EJ 012, Low Temperature Experiment - D_2O Detail Sheet 3

      M 20310 EJ 013, Low Temperature Experiment - D_2O Detail Sheet 4

   b. Reports:

      C. E. Klabunde and B. C. Kelley, "Irradiation Facilities in the Oak Ridge National Laboratory Bulk Shielding Reactor", International Symposium on Developments in Irradiation Capsule Technology, Held at Pleasonton, California, May 3-5, 1966, TID-4500 (CONF-660511), paper 8.7 (March 1967)

2. Purpose. The purpose of this facility is to provide a thermalized neutron current at the west face of this tank. The tank was originally designed and installed for use in conjunction with the liquid-helium cryostat [Low-Temperature Irradiation Facility (LTIF).]

3. Brief description. The tank was originally installed on the reactor grid plate; the facility covered the 32 westernmost grid positions. The tank is 25-in. wide and 11 15/16-in. deep. The height of the tank varies from 20 1/4-in. at the southeast corner to 28 1/4-in. at the northwest corner. Five of the six aluminum walls of the tank are 3/8-in. thick; the west wall is 5/16-in. thick. Therefore, the tank interposes a 11 3/8-in. slab of D_2O between the reactor core and any associated experiment located adjacent to the west wall of the tank.

The base plate is equipped with two footpieces which are almost identical to fuel element end boxes; when used on the grid plate, these foot pieces position the base plate in the reactor grid plate. In addition, the base plate contains holes which line up with the dowel pin associated with each reactor grid-plate position. Between the base plate and the tank is a slide-plate with sliding ways and a screw adjustment. This arrangement allows the tank position to be adjusted in the east-west direction using a special tool. This adjustment allowed the water gap (between the tank and the edges of the concave sides of the adjacent fuel elements) to be changed over a range from essentially zero to 1.135-in. Changing the water gap changes the cadmium ratio of the neutron current which emerges from the west wall of the tank. Reactivity measurements indicate that,

with the tank initially closest to the core, complete removal would cause a change of -1.85% $\Delta k/k$; with the tank initially at midposition, complete removal would cause a change of -0.96% $\Delta k/k$; and, with the tank initially at the farthest position, complete removal would result in a change of -0.47% $\Delta k/k$. Movement of this tank relative to the reactor core was not permitted during reactor operation.

Presently, the tank is mounted on a stand, thereby giving the capability of using the tank between the core (which is located at the west grid position) and the liquid helium cryostat or placing the tank in pool storage which is just northwest of the liquid helium cryostat.

4. Routine checks. A 1/2-in. schedule-40, aluminum pipe extends from the southeast corner of the top of the tank to above the pool water surface. A plastic tube attached to this 1/2-in. pipe enters the top and extends to the bottom of a heavy-walled polyethylene bottle which contains D_2O. This polyethylene bottle, which provides an expansion volume for the tank, is located just west of the LTIF working platform in an aluminum holder attached to the west pool wall. This facility is checked on an as-needed basis, depending on the use of the LTIF.

5. Instrumentation. No instrumentation is associated with this facility.

6. Installation and removal procedures. This facility was intended to be a permanently installed feature of the reactor. Installation or removal of the facility

constitutes a major operation and causes a significant change in reactivity; therefore, a special procedure would have to be written each time that tank is installed or removed. This procedure would require review and approval as described in Section 4.5.

5.2.3. Liquid-helium cryostat

1. References

a. Drawings:

Q-2853-1, Low Temperature Irradiation Facility Joule-Thomson Valve Safety - Front and Rear of Panelboard and Location

Q-2853-2, Low Temperature Irradiation Facility Joule-Thomson Valve Safety - Panel Layout, Cutout and Detail

P-2853-3, Low Temperature Irradiation Facility Joule-Thomson Valve Safety - Electrical Schematic and Wiring Diagrams

b. Reports:

C. E. Klabunde and B. C. Kelley, "Irradiation Facilities in the Oak Ridge National Laboratory Bulk Shielding Reactor", International Symposium on Developments in Irradiation Capsule Technology, Held at Pleasonton, California, May 3-5, 1966, TID-4500 (CONF-660511), paper 8.7 (March 1967)

2. Purpose. The purpose of this facility is to provide the capability for irradiating materials in a well-thermalized neutron flux at liquid helium temperature.

(Liquid helium temperatures are necessary to immobilize crystal lattice imperfections [damage] induced in pure metals by reactor irradiation. Reactor fluxes induce damage in metals not only by fast neutron collisions, but also by recoils from the [β, γ] reaction upon capture of thermal neutrons. Since the latter mechanism produces a relatively simple damage configuration, it can be a valuable basic research tool if properly isolated from fast-neutron damage.)

3. Description. The in-pool portion of this facility is located in the southwest corner of the reactor pool. Figure 5.4 depicts this facility with the reactor positioned against it as viewed from the south. The sample chamber is a 1-in.-diam, 8-in.-long section at the bottom of an 18-ft. tube. The chamber walls are cooled by the liquid helium circulating in a closed-cycle refrigeration system. The sample chamber and associated refrigerant-transfer lines and vacuum jacketing are housed in a 6-in.-diam pipe which is surrounded by a heavy-water-filled tank at the elevation of the reactor core. Fast and thermal neutron fluxes are given in Table 5.2. (For a description of the out-of-pool portion of this facility, see the referenced report.)

Reactivity measurements indicate that moving the reactor so that the west D_2O tank is against this facility has no measurable effect. The reactivity effect of this facility is of importance when the west D_2O tank has been removed from the core and the

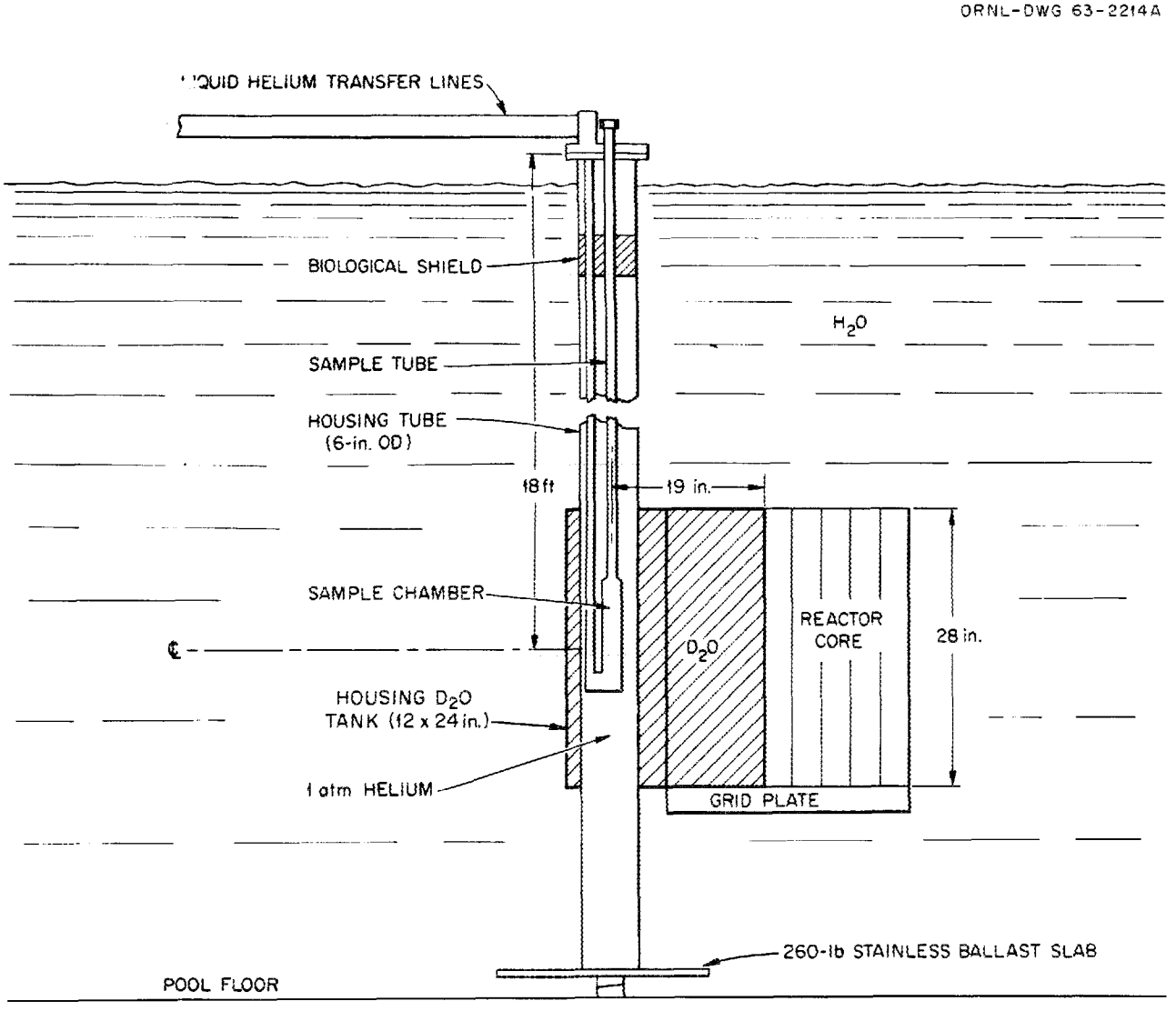

Fig. 5.4. The liquid helium cryostat.

core shifted west four grid positions. In this configuration, the movement of the core against this facility causes a reactivity change of +1.45% $\Delta k/k$.

4. Routine checks. Reactor Operations Section personnel have not been requested to make routine checks of this facility except for the shift walk-through checks.

5. Instrumentation. Although the liquid-helium cryostat facility has elaborate instrumentation (primarily temperature-monitoring instrumentation), only two instrumentation systems are of concern to the Reactor Operations Section personnel. These systems are the boron thermopile, which is inserted in one of the tank-access tubes and which monitors the neutron flux (thermal range), and the Joule-Thomson (J.T.) valve temperature monitor, which uses carbon-resistance thermometers to measure the temperature of the liquid helium just upstream from the Joule-Thomson flow-control valve. (This valve controls the flow of liquid helium through the coils surrounding the walls of the sample chamber.)

   The boron thermopile is of concern since it is an accurate indicator of neutron flux leakage to the facility. This parameter is an indicator of reactor power level and, in particular, determines the length of an irradiation at a desired exposure rate.

   The J.T. valve temperature is of primary concern since this parameter is used to initiate action by

the reactor control (or protection) system. If the E-panel switch (switch No. 1) is in the NORMAL position, the J.T. temperature-monitoring instrumentation will initiate an alarm if the temperature increases to 3.9°K (-269.25°C) and will initiate a setback if the temperature increases to 4.5°K (-268.65°C). In this case, the E-panel switch tie-in is provided for the protection of experiment data; therefore, the switch for this experiment is usually placed in the NORMAL position during reactor operation only at the request of the experimenter.

This situation is unusual when compared with experiments installed in other reactors operated by the Reactor Operations Section. More unusual, however, is the fact that, if the reactor is not being operated for some other experiment and even if the reactor is not positioned against the liquid helium cryostat, the E-panel switch may be left in the NORMAL position. This situation may occur during the post-irradiation period when continued low-temperature exposure of the sample is required. Normally, during this period, the Laboratory Patrol, which is a function of the Laboratory Facilities Section of the Operations Division, checks the experiment laboratory every four hours and monitors certain alarms from the laboratory. These alarms may be relayed to the Waste Monitoring Control Center, Building 3105, by operation of a switch in the experiment laboratory.

Installation and removal procedures. The in-pool portion of the LTIF is rather permanently installed in the southwest corner of the reactor pool. Samples to be irradiated are installed and removed (using standard procedures for handling radioactive materials) from this facility while the reactor is either shutdown, or while the reactor is located away from the cryostat.

The procedure for installing the facility adjacent to the reactor, therefore, involves decreasing the relative distance between the reactor and the facility. Positioning the reactor against the facility primarily involves following instructions given in Section 4.7. After the final north-south repositioning of the reactor bridge, the reactor carriage is moved west until the reactor core is in contact with the facility. The west D_2O tank presently mounted on a stand may become part of the facility by positioning the tank to the east side of the Cryostat Housing D_2O Tank. The reactor carriage is then permitted to seek its final position and may move eastward slightly.

The removal procedure requires only that the reactor carriage be moved until the facility and the reactor core are separated by a minimum of 3-ft (see Section 4.7.).

Since the reactor carriage must be moved to change the relative position of the reactor and the facility, such changes are prohibited when the reactor is operating even though no reactivity effects result.

5.2.4. North-face facility

1. References

   a. Drawings: Figure 5.5

   b. Reports: None

2. Purpose. The purpose of this facility is to provide readily available space for irradiating relatively large cpasules on the north face of the reactor. In addition, this facility maintains the capsules at a constant and reproducible position.

3. Brief description. This facility is a 3 1/2-in.-OD aluminum tube with 0.0625-in.-thick walls. The tube, when installed, extends from the elevation of the reactor grid plate to above the pool water surface (see Fig. 5.5). At the bottom of this tube is a base plate with footpieces which fit into the holes in the bracket attached to the north side of the reactor grid plate. Three rows of 1/2-in.-diam holes (on 6-in. centers along the entire length of this

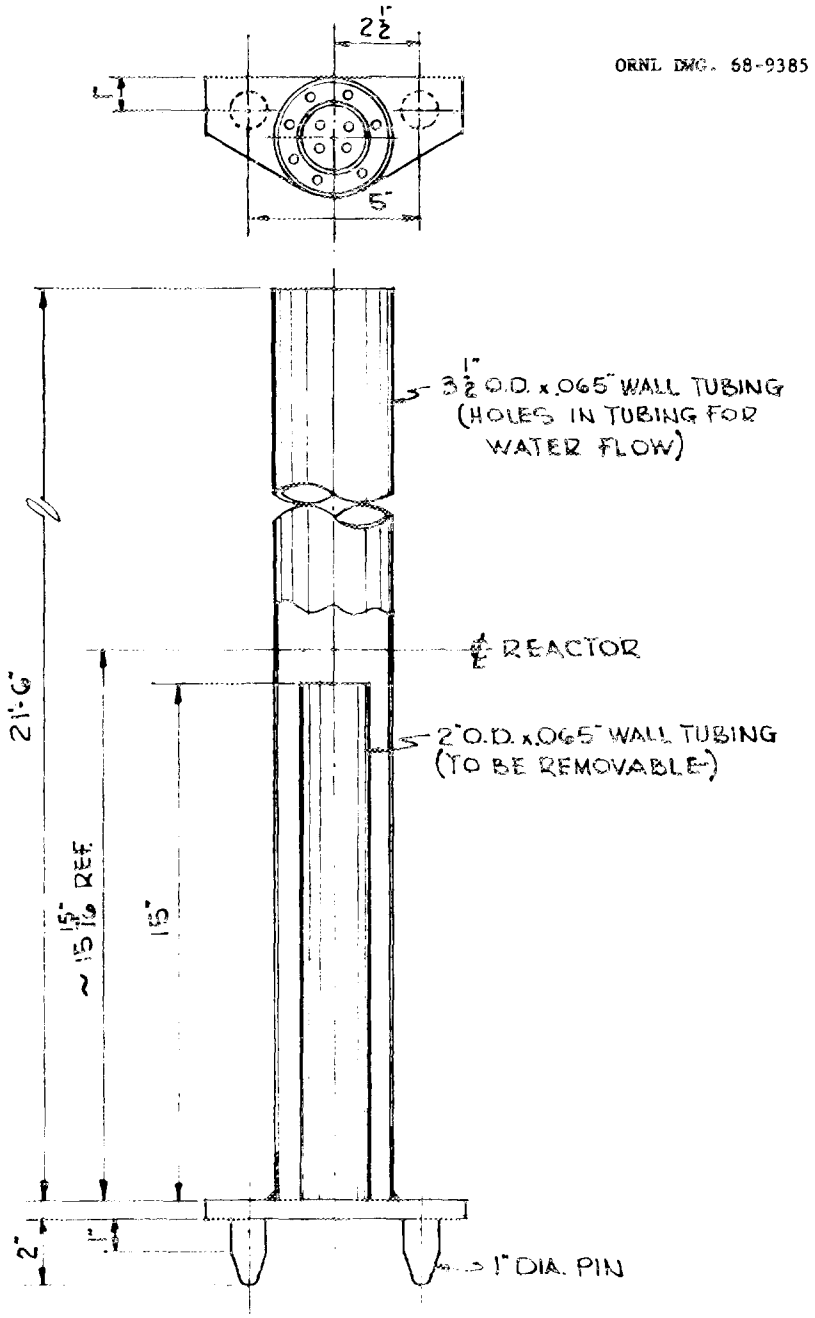

Fig. 5.5. North face irradiation facility.

tube) allow cooling by natural convection of the pool water. When installed at the north face of the reactor, an arm attached to the top of the tube is clamped to one of the hold-down arms.

The removal procedure for the facility is essentially the reverse of the installation procedure.

5.2.5. Core-position-15 facility

1. References

   a. Drawings: None

   b. Reports: None

2. Purpose. Core position 15 normally contains only a grid-plate plug. A simple irradiation facility was constructed which could be installed in this core position. When installed, this facility does not prevent installation or use of any of the more commonly used facilities; therefore, it is convenient for irradiation of low priority samples requiring relatively long exposure time.

3. Brief description. This facility is a 3-in.-OD aluminum tube with 0.0625-in.-thick walls. The tube, when installed, extends from the elevation of the reactor grid plate to above the pool water surface. A spare grid-plate plug is welded to the bottom of the tube and serves as a footpiece; four rows of 1/2-in.-diam holes (on 7-in. centers along the entire 21-ft length of the tube) allow cooling by natural convection of the pool water. (The length given is from the top of the tube to the top of the footpiece.)

When installed in the reactor, a bracket attached to the top of the tube is clamped to one of the rod-drive support arms.

Measurements indicate that the reactivity effect of the tube alone is negligible. Samples installed in the tube, however, might have an appreciable reactivity effect and generally will require that a measurement be made.

4. Routine checks. Routine checks of this facility are not required except for the shift walk-through checks during periods when this facility is installed against the reactor.
5. Instrumentation. No instrumentation is associated with this facility.
6. Installation and removal procedures. Before installation of this facility, the grid-plate plug must be removed from CP-15 and stored on the pool floor. The facility should then be lifted by hand from its pool-side storage position by an operator standing on the instrument bridge. The instrument bridge should be moved south until the facility footpiece can be inserted into CP-15. The arm at the top of the tube can then be clamped to the support arm.

   The removal procedure for this facility is essentially the reverse of the installation procedure.

5.2.6. Modified CP-15 facility

1. References

   a. Drawings:

      SSD D 1513 E

   b. Reports:

      Letter from R. R. Coltman to R. C. Weir, dated November 4, 1969, Subject - "The Modified CP-15 facility."

2. Purpose. The modified CP-15 facility provides an in-core location for radiation damage studies at near ambient temperatures with some cooling provided by heat exchange with the pool water. The modified facility, as shown in Fig. 5.6, is equipped with an enclosed blower to circulate the coolant gas (usually helium) thus increasing the heat removal capacity as compared with a thermal convection cooling cycle. Samples must be non-fissile and non-contaminating.

3. Brief description. The modified CP-15 facility is essentially a hollow aluminum core insert fitted with an access tube which extends above the surface of the pool water. The access tube terminates at the top in a rather large cylindrical chamber which serves as a junction box for thermocouple and electrical leads and as a container for a small blower used to recirculate the coolant gases. A smaller central tube extends from the very top of the assembly to near the bottom. The central tube serves as sample holder and as the inlet gas line when forced cooling is required. Tests indicate that the installation of this facility (replacing water) causes a loss of reactivity of 0.18% $\Delta k/k$.

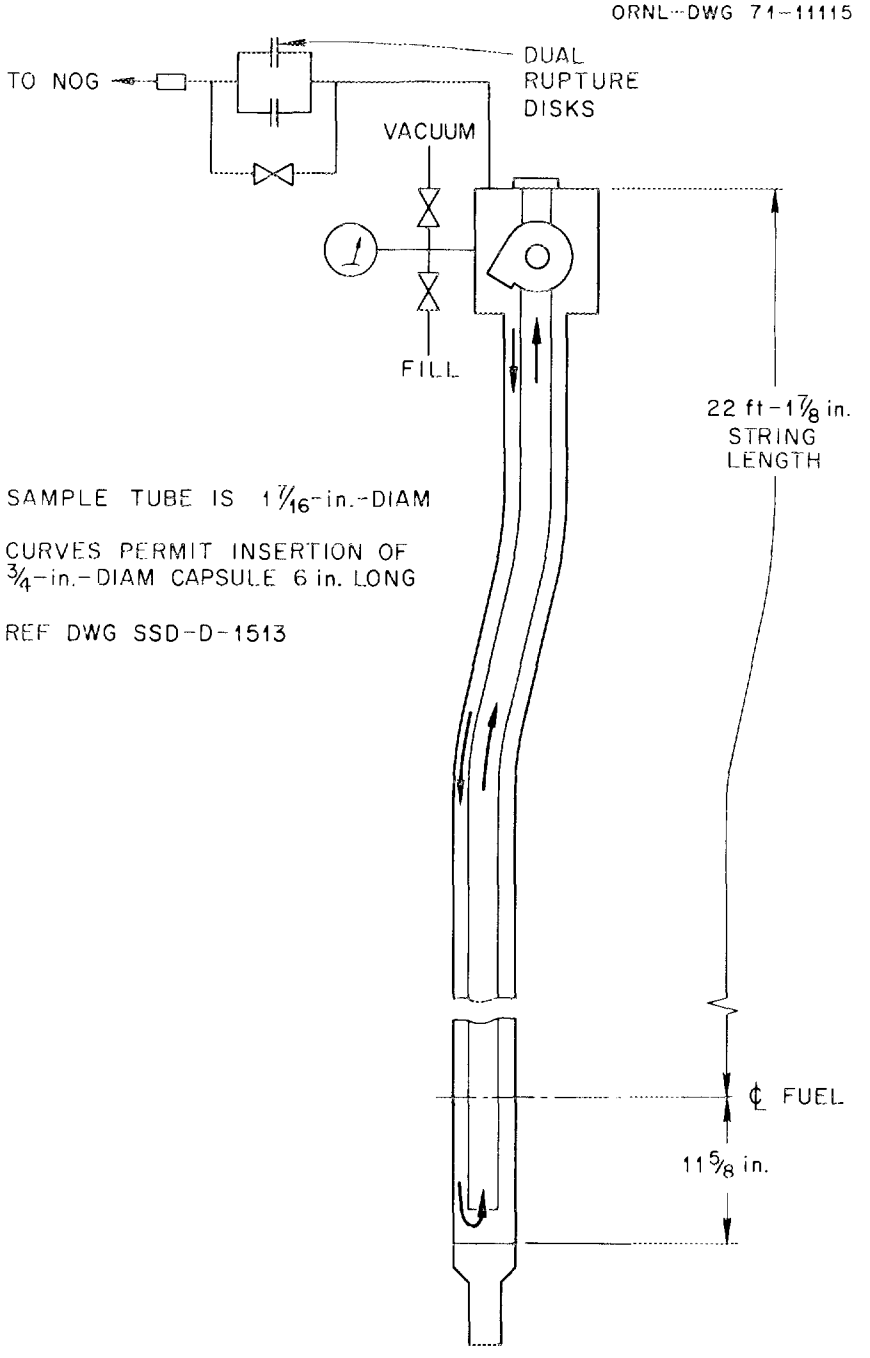

Fig. 5.6. Modified CP-15 facility.

Fig. 5.6. Modified CP-15 facility.

4. Routine checks. The pressure of coolant should be checked once each shift, and any changes from the posted normal should be reported to the experimenter and to the reactor supervisor.
5. Instrumentation. The chamber at the top of the facility is equipped with a pressure gauge which indicates the pressure of the coolant gas. A thermocouple connector was also built into the chamber to permit temperature measurements when the experimenter requires them.
6. Installation and removal procedures. Prior to installation of the facility, the experimenter will have placed the sample to be irradiated in the facility and will have established the proper gas mixture inside the assembly. The modified CP-15 facility may be installed or removed only when the reactor is shutdown. The facility usually can be installed manually, i.e., the crane or other mechanical lifting device is not needed. After the core insert is seated in the grid, the top of the facility is secured by clamping it to the CP-15 support bracket which, in turn, is supported from the upper reactor structure. It is usually easier to raise the experiment above the core and then lower it into the lattice from a position directly above CP-15. It is possible, however, and sometimes easier, to install the facility from the north side of the reactor, with only minor vertical movement after centering it above position CP-15.

After the facility is installed in the reactor, it will usually be necessary to:

a. energize the recirculating blower and determine that it is running, and

b. determine that the exit line from the pressure rupture discs is connected to the NOG and that the NOG valve is open.

Experiment removal is accomplished by reversing the installation procedure. The facility is replaced by a grid-plate aluminum plug

5.2.7. Miscellaneous facilities

Because the north face of the reactor is readily accessible, capsules containing materials to be irradiated can be placed adjacent to this face of the core. If their effect on the reactivity of the reactor is immeasurably low, such samples may be suspended from the reactor bridge by metal wire. If their reactivity effect can be measured, some method of preventing such samples from moving must be provided.

A mobile catwalk bridge is available (refer to Section 11.5 for details).

The instrument bridge may also be used to accommodate various experiment installations. This bridge may be moved north or south by a gear arrangement similar to that provided on the reactor bridge. (A qualified supervisor must be present during movement of the instrument bridge.)

5.3. Experiment Instrumentation

The instruments used by experimenters, particularly those related to the reactor control circuits, are carefully chosen for reliability and performance. As noted in Section 1, "Introduction," the safety of the reactor and its personnel is as dependent upon the experiment instrumentation as it is upon the reactor instrumentation. For this reason, all experiment variables which are considered safety problems are dually monitored and doubly tracked. For example, in the case of a temperature variable (measured with thermocouples) having safety implications, two thermocouples would be supplied with a recorder for each thermocouple; and each recorder would have one circuit to initiate an alarm, one circuit for setback, one circuit for reverse, and two circuits to scram the reactor.

Since the BSR is usually operated for only one experiment at a time, experimenters are allowed the option of providing instrumentation that initiates reactor power reductions to protect experiment data, i.e., where no safety implications are present. When data protection is the only objective, the experimenter must decide for himself the degree of redundancy and the method of power reduction required.

5.4. Experiment-to-Reactor Switches (The E-Panel)*

To prevent extensive wiring changes each time an experiment is inserted into, or removed from, the reactor flux, special three-position switches, or E-switches, are used to effect the reactor "tie-in." These switches are located on vertical panel A (see Fig. 5.7) in the control room and are key-operated. Their use is limited to the reactor supervisor or, during shutdown, to instrument engineers directly in contact with the supervisor. Each E-panel consists of a complex of wiring and relays which enables signals from the experiment instrumentation to be converted to a specific action, i.e., alarm, setback, and/or scram.

5.4.1. Modes of E-Switches

The three switch positions are somewhat self-explanatory. The NORMAL position is to be used when the experiment is in the reactor. In this mode, the experiment is connected to the annunciator panel and, if applicable, to the reactor control circuits. An indicator light at the E-panel should be illuminated indicating that power has been supplied to the E-panel. The switch is not to be turned from this mode while the experiment is in the reactor unless special instructions are issued.

---

*J. T. DeLorenzo, Guide for the Design of Safety Instrumentation for Experiments in the LITR and ORR, ORNL-TM-77 (December 11, 1961).

ORNL-PHOTO 92236

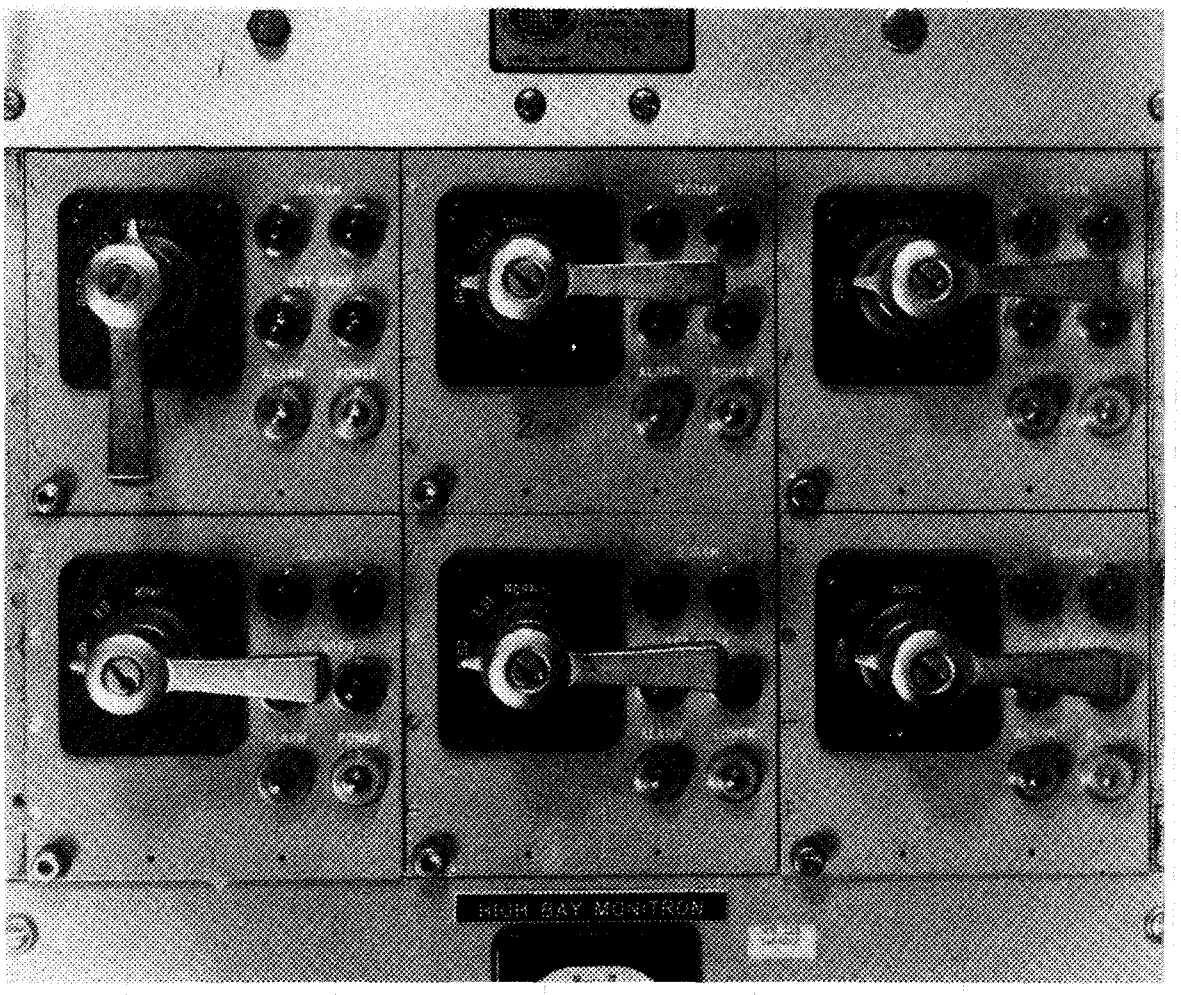

Fig. 5.7. E-panel switches.

The TEST mode on the E-panel allows the experimenter to simulate any desired condition (scram, setback, etc.) without affecting the reactor. During tests, the feedback of information from the control room is the same as if the experiment were connected to the reactor, except that the experimenter's "tie-in" annunciator will be in the alarm condition. In the TEST position, the control room annunciator station for the experiment will also remain in the alarm condition. In addition, the "power" indicator light at the E-panel will be illuminated.

The DISCONNECT position completely severs the experiment power from the E-panel. In this position, the "power" indicator light will not be illuminated. The "tie-in" annunciator at the experiment control room and the experiment annunciator station at the reactor control room will both be in the alarm condition.

5.4.2. Experiment alarm

Contacts in recorders or other devices at the experiment panel or apparatus serve to actuate local annunciators. Auxililary contacts within the local annunciators open in the event of an alarm and, in the E-panel, de-energize a relay (K1 series) to actuate the experiment annunciator in the control room. Annunciators other than those associated with scrams, reverses, or setbacks may be made to cause only local alarms if the experiment is manned. (This may be accomplished by bypassing the auxiliary contacts for those annunciators.)

5.4.3. Experiment setback or reverse

The signal for a setback comes from contacts (two per instrument, one normally open and one normally closed) within

the experiment instrumentation. The normally closed contacts open the circuit to de-energize a relay (K2 series) in the E-panel which, in turn, de-energizes relay K118 if the E-panel is in the NORMAL mode. This results in a setback. The normally open contacts, similarly, cause a setback by energizing a relay (K3 series) in the E-panel which, in turn, energizes relay K119 if the E-panel is in NORMAL. A reverse will occur if the reactor instrumentation does not detect a negative period <100 s (as displayed by the log-N period recorder) within 4 s after either E-panel relay (K2 or K3 series) is actuated.

5.4.4. Experiment scram

A scram is initiated by contacts (two per instrument, one normally open and one normally closed) within the experiment's recorders or other devices. The normally-closed contacts open the circuit to de-energize a relay (K4 series) in the E-panel which, in turn, de-energizes relay K1 if the E-panel is in NORMAL. This results in a slow scram. The normally-open contacts, similarly, cause a slow scram by energizing a relay (K5 series) in the E-panel which, in turn, energizes relay K2 if the E-panel is in NORMAL.

NOTE: Since power to each of the E-panels is supplied from each of the experiment control room instrument power supplies, loss of this power supply in an experiment will automatically initiate a reverse and a "drop-out" scram. The scram will normally obscure the fact that the reverse was also initiated; however, if the scram circuit should fail, the reverse action would provide the desired reactor shutdown. This feature is included for all experiments even though normal experiment safety action is restricted to an annunciator alarm.

5.5. General Rules for Review and Approval Procedure for Experiments

5.5.1. Introduction

In order to discuss the review and approval procedure for experiments, it is necessary to distinguish between repeat experiments, near-repeat experiments, and new experiments. These are defined as follows:

1. Repeat experiments are those which are identical in all respects to an experiment which was previously reviewed and approved and was subsequently irradiated and then removed from the reactor successfully. For an experiment to be judged as identical to a previous experiment, the following criteria must be unchanged from the previous irradiation:
   a. Materials and internal construction, i.e., chemical composition, physical form, and weight.
   b. Containment features, i.e., type, size, and material.
   c. Irradiation facility.
   d. Irradiation time.
   e. Reactor power level.
2. Near-repeat experiments are those which are essentially, but not exactly, identical in all respects to an experiment which was previously reviewed and approved and which was subsequently irradiated and removed from the reactor successfully. Review of near-repeat experiments is similar to review of new

experiments; however, in certain specified circumstances the reactor supervisor may approve the experiment. When approval of the Experiment Coordinator is required, this approval may be given verbally to the BSR supervisor.

3. New experiments are those which, in the opinion of the Experiment Coordinator are significantly different from any previous experiment. Written approval of the Experiment Coordinator is required. (Design and installation of a new experiment facility must be approved in the same manner as a new experiment.) When review of a new experiment is made, the experimenter will be requested to provide detailed information; and, depending upon the complexity of the experiment, the ORNL Reactor Experiment Review Committee may be asked to review it. In such cases, the experimenter will be informed so that appropriate documentation of the proposed experiment can be prepared.

Thus, each in-reactor experiment is subjected to comprehensive reviews and hazards evaluations by the ORNL Reactor Experiment Review Committee and/or by the Operations Division. In this way, an experiment is approved for operation within safety limits applicable only to the specific experiment. Appropriate limits are placed upon any materials, systems, or components that may (for any credible reason) affect the reactor reactivity or reactor physical components in such a manner or to such a degree that unsafe conditions could result.

5.5.2. General criteria

1. With respect to reactivity effects, experiments are considered and approved as follows:

a. An experiment is approved more or less routinely if the maximum change in reactivity that can be caused by the experiment is conservatively less than the total amount of reactivity controlled by the servo system (less than 0.5% $\Delta k/k$).

b. Experiments having reactivity worths greater than that in item a, above, are considered in more detail, particularly if failure or malfunction of the experiments may cause changes in these values. Considerations are with respect to total worth, rates of change, and to particular situations that may be associated with these changes. Experiments are approved only if it is found incredible that they could cause unacceptable hazards. Review by the ORNL Reactor Experiment Review Committee is required.

c. No experiment will be approved which can cause a rapid change in the reactor reactivity >1.6% $\Delta k/k$.

2. With respect to energy release, experiments are considered and approved as follows:

a. Any explosive material or mixture of materials, such as hydrogen and oxygen, to be placed in or near the reactor will be limited to the equivalent of 1 g of TNT (1.1 kcal).

b. The energy release which might result from the reaction of any of the so-called reactive materials, such as Na, Li, or K, with the reactor coolant or the experiment coolant by any credible mechanism shall be limited to 100 kcal unless a monitored, double barrier exists between the material and the coolant. Experiments of this type in which the potential energy release is greater than 500 kcal will not be installed without prior approval by the DOE.

5.6. Review, Approval, and Irradiation of Repeat Experiments

5.6.1. Review and approval of repeat experiments

Requests for review of repeat experiments, as defined in Section 5.5.1, are initially presented to the BSR day shift supervisor. The BSR day shift supervisor compares the information presented in a completed "Experiment Information" sheet (Example 5.1) with the experiment information sheet for referenced (i.e., previously approved) experiments. If the criteria presented in Section 5.5.1 are not completely satisfied, the request for review must be referred to the BSR supervisor; however, if the criteria presented in Section 5.5.1 are completely satisfied, the BSR day shift supervisor may approve the experiment (by signing the "Experiment Information" sheet), install the experiment, and perform the irradiation. (If the day shift supervisor has any doubt as to the details of the experiment or as to the interpretation of the criteria, he should refer the experimenter to the BSR supervisor.) Once daily, the BSR day supervisor should inform the BSR supervisor of all experiments for which review has been requested, for which approval has been granted by the day shift supervisor, or which have been irradiated. In return, the BSR supervisor should inform the BSR day shift supervisor of the status of all experiments for which review by the BSR supervisor or the Experiment Coordinator has been requested.

EXPERIMENT INFORMATION

DATE	APPROVED BY	DATE	CHECKED BY

APPROVAL LETTER ON FILE ☐ Yes ☐ No

EXPERIMENT CLASSIFICATION ☐ Repeat ☐ Near Repeat ☐ New

REMARKS:

EXPERIMENT LOCATION	REACTOR	DATE INSERTED	FACILITY

EXPECTED DURATION OF EXPERIMENT

BRIEF DESCRIPTION OF EXPERIMENT

WHOM TO NOTIFY IN CASE OF TROUBLE

NAME	BUSINESS PHONE	HOME PHONE

SPECIAL STARTUP INSTRUCTIONS

WHAT TO DO IN THE EVENT OF AN ACCIDENTAL SHUTDOWN

WHAT SERVICES (GAS, STEAM, GASKS, ETC.) ARE REQUIRED FOR THIS EXPERIMENT

WHAT TO DO IN THE EVENT OF POWER FAILURE

NOTIFY EXPERIMENTER BEFORE SCHEDULED SHUTDOWN?

UCN-4404 (3) 6-76

Example 5.1.

SPECIAL CHECK OR READINGS TO BE MADE

POSSIBLE TROUBLES

SIGNAL RESPONSE	CAUSED BY	WHAT TO DO
ALARM ONLY		
ALARM AND SETBACK		
ALARM AND SCRAM		
ANY OTHER INSTRUCTIONS		

Example 5.1. (continued).

5.6.2. Irradiation of repeat experiments

During irradiation in a reactor irradiation facility and before removal of the experiment hardware from a "reactor-flux" position, the experiment information sheet and all supplementary information will be kept in a loose-leaf notebook labeled "BSR Experiment," which is kept on the desk in the day shift supervisor's office adjacent to the control room. Following irradiation in a reactor irradiation facility (either after removal of the facility to a storage location or after removal of the experiment hardware from a "reactor-flux" position) the experiment information sheet and all supplemental information will be kept at the BSR day shift supervisor's desk until the experiment hardware is claimed (i.e., shipped) by the experimenter. After the experiment hardware has been claimed, the experiment information sheet and all supplementary informaton will be placed in the experiment information notebook file.

5.6.3. Reporting experiment activities and/or trouble

Any activity related to the operation of an experiment, other than that considered routine in nature, should be carefully recorded in the appropriate portion of the daily log and should be brought to the attention of the reactor supervisor as promptly as the situation dictates. Experiment trouble of sufficient severity to cause a change in the normal operating conditions at either the experiment or the reactor should be reported to the reactor supervisor as soon as possible.

5.7. Review, Approval, and Irradiation of Near-Repeat Experiments

5.7.1. Review and approval of near-repeat experiments

Requests for review of near-repeat experiments, as defined in Section 5.5.1, should be presented initially to the BSR supervisor. (If they are presented initially to the BSR day shift supervisor, they should be forwarded to the BSR supervisor.) The BSR supervisor should compare the information presented in a completed experiment information sheet (complete except for the sections designating the "reactor" and the "facility") with the experiment information sheet for referenced (i.e., previously approved) experiments. The BSR supervisor should then determine the availability of a desired reactor facility and (using the criteria presented in Section 5.5.1) should carefully evaluate the effect of the differences between the proposed experiment and the previously approved experiment. He must determine that the differences do not result in exceeding previously established safety limits. While making this determination, he should consider factors such as, but not limited to, the following:

1. Compatibility of materials with one another and with various environments.
2. Behavior and durability of materials during, and subsequent to, irradiation.
3. Temperature effects on materials.
4. Heat-production and heat-dissipation mechanisms in the irradiation facilities.

5. Handling of radioactive materials.
6. Corrosion.
7. Use and limitation of the waste disposal systems for radioactive liquids, gases, and solids.
8. Reactor power level and irradiation time.

If, after his review, the BSR supervisor determines that previously established safety limits will be exceeded or might be exceeded, he should request review by the Experiment Coordinator; subsequent approval by the Experiment Coordinator may be given verbally to the BSR supervisor. However, if, after his review, the BSR supervisor determines that no previously established safety limit will be exceeded, he should verbally notify the Experiment Coordinator that he finds that the proposed experiment does not exceed previously established safety limits (as established by the previously approved experiment). Upon request he will provide the Experiment Coordinator with information as to the difference between the proposed and the previous experiment. If, in the opinion of the Experiment Coordinator, no further review is required, the BSR supervisor will approve the experiment.

When approval is granted, the BSR supervisor should sign the experiment information sheet after filling in the "reactor" and "facility" blanks; the BSR day shift supervisor should be informed verbally.

If review by the Experiment Coordinator is required and if the review cannot be accomplished quickly (either because previously established safety limits might be exceeded, because more information is required, because another BSR

facility is more suitable for the experiment, or because a facility in another reactor is more suitable), the Experiment Coordinator should inform the BSR supervisor and the experimenter. If the Experiment Coordinator determines that the experiment deviates from the definition of repeat experiments sufficiently to constitute a new experiment, as defined in Section 5.5.1, the procedure outlined in Section 5.8 applies.

5.7.2. Irradiation of near-repeat experiments

This procedure is identical in all respects to that presented in Section 5.6.2.

5.8. Review, Approval, and Irradiation of New Experiments*

5.8.1. Review and approval of new experiments*

The procedures for handling of new research experiments from the time of initial contact by the research personnel with Operations personnel until the termination of the experiment operation are detailed in ORNL/TM-8308 (Oak Ridge National Laboratory Research Reactor Experimenters' Guide). Refer to this guide for the appropriate procedures.

---

*This procedure also applies to new irradiation facilities.

5.9. Changes in Operating Experiments

From time to time, either due to malfunctioning instrumentation or for various other reasons, an experimenter may wish to change the status of his experiment. Usually, these changes consist of altering a monitored parameter's alarm setpoint or disconnecting the experiment from the safety circuit (E-panel). Before any actual changes are made, the experimenter must submit to the reactor supervisor an "Experiment Status Change Request" form (Example 5.2) indicating the changes to be made. Both Operations (the reactor supervisor) and the Experimenter must approve the change as indicated on the request. Approval of the Experiment Coordinator may also be requested by the reactor supervisor.

Following the acquisition of approval signatures, the request is forwarded to the proper group (P&E, I&C, Operations) so that the change can be effected. In turn and upon completion of the work, the form is forwarded to the supervisor in charge.

When the supervisor in charge at the BSR receives the form, indicating that the change is completed, he should check to see that it has been signed and filled out properly. He will then place the form in the proper section of the experiment notebook located in the BSR control room office.

EXPERIMENT STATUS CHANGE REQUEST

DATE

REQUESTER

EXPERIMENT IDENTIFICATION

CHANGE(S) REQUESTED

REASON FOR CHANGE

PRECAUTIONS TO BE TAKEN

CHANGE(S) APPROVED BY

OPERATIONS

EXPERIMENTER

OTHER

CHANGE(S) COMPLETED BY

NAME

DIVISION

DATE

UCN-2166
(3 2-67)

Example 5.2.

5.10. Irradiation of Targets or Samples

Introduction. The irradiation of targets or samples for activation analysis, flux measurement, or radioisotope production is a rather important function at the BSR. Such samples, however, are generally rather small and of little influence especially when irradiated in facilities somewhat separated from the reactor core, as are the various tubes in the D_2O tank, for example. Consequently, samples and irradiation targets, for review purposes, are handled differently than are the more complicated experiments or irradiation facilities.

Guidelines for approval, handling, and irradiation of such samples or irradiation targets are presented in the following procedures.

5.10.1. Sample scheduling and records

The person presenting a sample for irradiation (requester) must furnish a completed "Request for Sample Irradiation" sheet (Example 5.3). Operations Division approval signature may be that of the day shift supervisor if the sample is identical with one previously irradiated; if there are any deviations, the BSR reactor supervisor must sign the sheet; new samples must be approved by the Experiment Coordinator. A notebook of filed "Request for Sample Irradiation" sheets will be maintained.

Upon receiving a sample to be irradiated for activation analysis, flux measurements, or radioisotope production the BSR day shift supervisor will prepare a "Sample Schedule

REQUEST FOR IRRADIATION-BSR FACILITY

CERTIFICATION OF SAMPLE (BY REQUESTER)

THE REQUESTER, BY HIS SIGNATURE BELOW, INDICATES THAT HE IS CERTIFYING THAT THE TARGET FORM AND CONTENT IS AS STATED BELOW.

REQUESTER'S SIGNATURE	DATE

REQUEST FOR IRRADIATION (BY REQUESTER)

SAMPLE DESCRIPTION: (SPECIFY ISOTOPIC CONTENT, CHEMICAL AND PHYSICAL FORM, QUANTITY.)

METHOD OF ENCAPSULATION

TO BE IRRADIATED FOR HOURS, DAYS, MINUTES	IN LOCATION	AT POWER LEVEL

TIME IRRADIATION TO BEGIN	DATE	TIME IRRADIATION TO END	DATE

DISPOSITION FOLLOWING IRRADIATION

OTHER PERTINENT DATA

APPROVAL FOR IRRADIATION (BY OPERATIONS)

☐ REPEAT OF SAMPLE PREVIOUSLY APPROVED	SIGNED	DATE

☐ NEAR - REPEAT SAMPLE APPROVAL BY REACTOR SUPERVISOR OR ☐ TECH. ASSISTANCE DEPT.

SIGNED	DATE

☐ NEW SAMPLE APPROVED BY TECH. ASSISTANCE DEPT.

SIGNED	DATE

ADDITIONAL SAMPLES IDENTICAL TO THIS SAMPLE ARE HEREBY APPROVED FOR IRRADIATION.

SIGNED	DATE

REACTOR OPR. NUMBER ASSIGNED TO SAMPLE

UCN-12191
(3 9-76)

Example 5.3.

Sheet" (Example 5.4). This form, filled out in duplicate, will contain the following information:

1. date the sample was submitted;
2. requester's name, division, and charge number;
3. material and amount to be irradiated;
4. irradiation facility;
5. power level;
6. sample number and classification; and
7. approval signatures.

The sample numbers are coded as indicated in the following example: 82-7-6 - the first set of digits, 82, indicate the year (1982); the next digit, 7, indicates the month (July); and the last digit, 6, indicates that the sample is the sixth received during that month. These numbers are to be placed on the sample.

A "sample notebook" is also maintained by the BSR day shift supervisor. This book contains the same information as the sample schedule sheet and is filed on the day shift supervisor's desk.

Due to the nature of the BSR sample irradiation, each sample will be approved for irradiation on an individual basis (Example 5.3), thereby eliminating the necessity for a blanket approval file.

It should be noted that some of the experiments described in the preceding sections, and for which "Experiment Information" sheets have been prepared, will also require preparation of the "Sample Schedule Sheets." This procedure is followed, as will be noted later, so that personnel at the

SAMPLE SCHEDULE SHEET

BSR

DATE	SAMPLE NO.
MATERIAL AND WEIGHT	
APPROVED BY	SAMPLE CLASSIFICATION ☐ REPEAT ☐ NEAR REPEAT ☐ NEW
CUSTOMER	DIVISION
CHARGE CODE	POWER LEVEL
D_2O TANK TUBE NO.	OTHERS

	SCHEDULED		ACTUAL		
	DATE	TIME	DATE	TIME	BY
IN					
OUT					

POSITION (BOTTOM TO TOP)

DISPOTITION	PICKUP BY	DATE	TIME
SCHEDULED			
ACTUAL			

REMARKS:

UCN-8894 (3 6-76)

Example 5.4.

remote control desk may be kept abreast of the irradiation schedule for relatively simple experiments. However, since many samples are categorically routine, they will require only the "Sample Schedule Sheet."

"Schedule Racks" in which the "Sample Schedule Sheets" are placed are located in the control room annex and are labeled as follows:

1. Samples to be inserted.
2. Samples being irradiated.
3. Samples pulled up for decay.
4. Samples in storage.

For irradiations which will be completed within a few hours (usually on the same shift) after the sample is scheduled, both copies of the "Sample Schedule Sheet" may be kept in the appropriate rack at the BSR. For irradiations which continue into or throughout succeeding shifts, the original copy of the "Sample Schedule Sheet" will be transferred to the ORR control room and placed in racks which are also labeled with the four above categories. The BSR day shift supervisor or his substitute is responsible for the transfer of sample schedule sheets to the ORR control room.

When the irradiation is completed and the experimenter claims the sample, the carbon copy of the "Sample Schedule Sheet" is given to the experimenter; and the original copy is filed in the BSR day shift supervisor's desk.

5.10.2. Sample handling

1. Storage prior to irradiation. The samples, properly identified, will be placed in the storage rack located under the clipboards by the person who schedules the sample. If radioactive, the sample will be placed in an appropriate shield.
2. Preparation for irradiation. Prior to the time for the irradiation to begin, the sample should be prepared by the attachment of string or wire for support in the facility as follows:
   a. In the East D_2O Tank
      (1) For irradiations up to 1 hr, small nylon (approximately 1/16-in.-diam) string is used.
      (2) For irradiations up to 6 hr, large nylon (approximately 1/8-in.-diam) string is used.
      (3) For irradiations of greater than 6 hr, aluminum wire should be used in the flux region.
   b. In other facilities, such as the north-face tube and CP-15 or CP-11, aluminum wire will generally be used to support the sample.
3. Irradiation. The sample will be lowered into the irradiation facility designated at the scheduled time using the following guidelines:
   a. East D_2O Tank
      (1) Lower the sample to the bottom of the tube.
      (2) Raise the sample the required distance to bring the sample to the core centerline (see Table 5.1).

(3) Record the actual "time in" on both copies of the "Sample Schedule Sheet" and initial the entry.

(4) Samples can be inserted into or removed from all sample tubes of the East D_2O Tank during reactor operation.

b. Other facilities

(1) Lower the sample to the position designated on the "Sample Schedule Sheet" or in other special instructions.

(2) Follow any special precautions relative to radiation hazards which might be encountered.

(3) Record the actual "time in" on both copies of the "Sample Schedule Sheet" and initial the entry.

4. Postirradiation handling. At the end of the irradiation period, pull the sample from the flux and:

a. East D_2O Tank

(1) Allow sufficient decay time to permit removal to storage or to a shield.

(2) Allow to decay in accordance with instructions on the "Sample Schedule Sheet."

(3) Record the actual "time out" on both copies of the "Sample Schedule Sheet" and initial the entry.

b. Other Facilities

(1) Follow special instructions on the "Sample Schedule Sheet."

(2) Record the actual "time out" on both copies of the "Sample Schedule Sheet" and initial the entry.

5. Shipping samples

a. Follow approved procedures for shipping radioactive materials. Refer to No. 28 of the ORNL Health Physics Manual and No. 4.1 of the ORNL Health Physics Procedure Manual.

b. Health Physics coverage should be provided to ensure radiation control.

6. REACTOR COOLING SYSTEMS

6.1. The Primary-Water Cooling System

6.1.1. References

Drawings:

P 20310 EC 001, Cooling Water System - Flow Sheet

P 20310 EC 010, Cooling Water Plan - Sheet 1

P 20310 EC 011, Cooling Water - Section

P 20310 EC 012, Cooling Water - Section and Details

P 20310 EC 013, Decay Tank Modification

P 20310 EC 020, Underground Reactor Water, Air Off-Gas - Plan

P 20310 EC 021, Profile of 8-in. Underground Reactor Water Lines to and from Heat-Exchanger Pump House

P 20310 EC 031, Heat-Exchanger Piping - Plan

P 20310 EC 032, Heat-Exchanger Piping - Sections Sheet 1

P 20310 EC 033, Heat-Exchanger Piping - Sections Sheet 2

E 20310 YC 043-D, American Water Softener-Assembly-Resin Columns

E 20310 YC 044-B, American Water Softener-Assembly-Regenerate System

P 11246 PF 001, Degasser Tank - Installation Plan and Section

S 11274 PF 001, Relocation of dp Cells - Plan Elevation and Details

6.1.2. Introduction

The major components of the primary cooling system are:

1. The centrifugal pump, which is rated at 1230-gpm flow with a discharge pressure of approximately 35 psig.
2. A shell- and tube-heat exchanger rated at 2 MW.
3. The reactor pool, itself, which holds approximately 130,000 gal of water.
4. The reactor core and lower manifold.
5. A decay tank, which also serves as a receiving tank.
6. The piping necessary to interconnect these components.

In addition, the primary system is equipped with surge and gas-removal tanks, vent systems, and a cleanup system, which includes a two-column demineralizer. The reactor cooling systems are shown schematically in Fig. 6.1.

6.1.3. Description

The reactor grid plate is supported on a structure, referred to as the water manifold and reactor-grid support, which is shown as item 3 in Figs. 6.2 and 6.3. The entire south end of this manifold consists of a flapper-type valve which, when opened, allows the reactor to be cooled by natural convection of the pool water; the flow path for natural-convection cooling is shown in Fig. 6.3. Operation of the reactor in this mode (Mode 1) is permitted at power levels of 1000 kW or less. Reactor operation in Mode 1 is restricted, administratively, to those occasions when the forced cooling system is not available for use.

By contrast, power levels up to 2000 kW are permitted when the reactor is operated in Mode 2 (forced flow with the flapper-type valve closed).

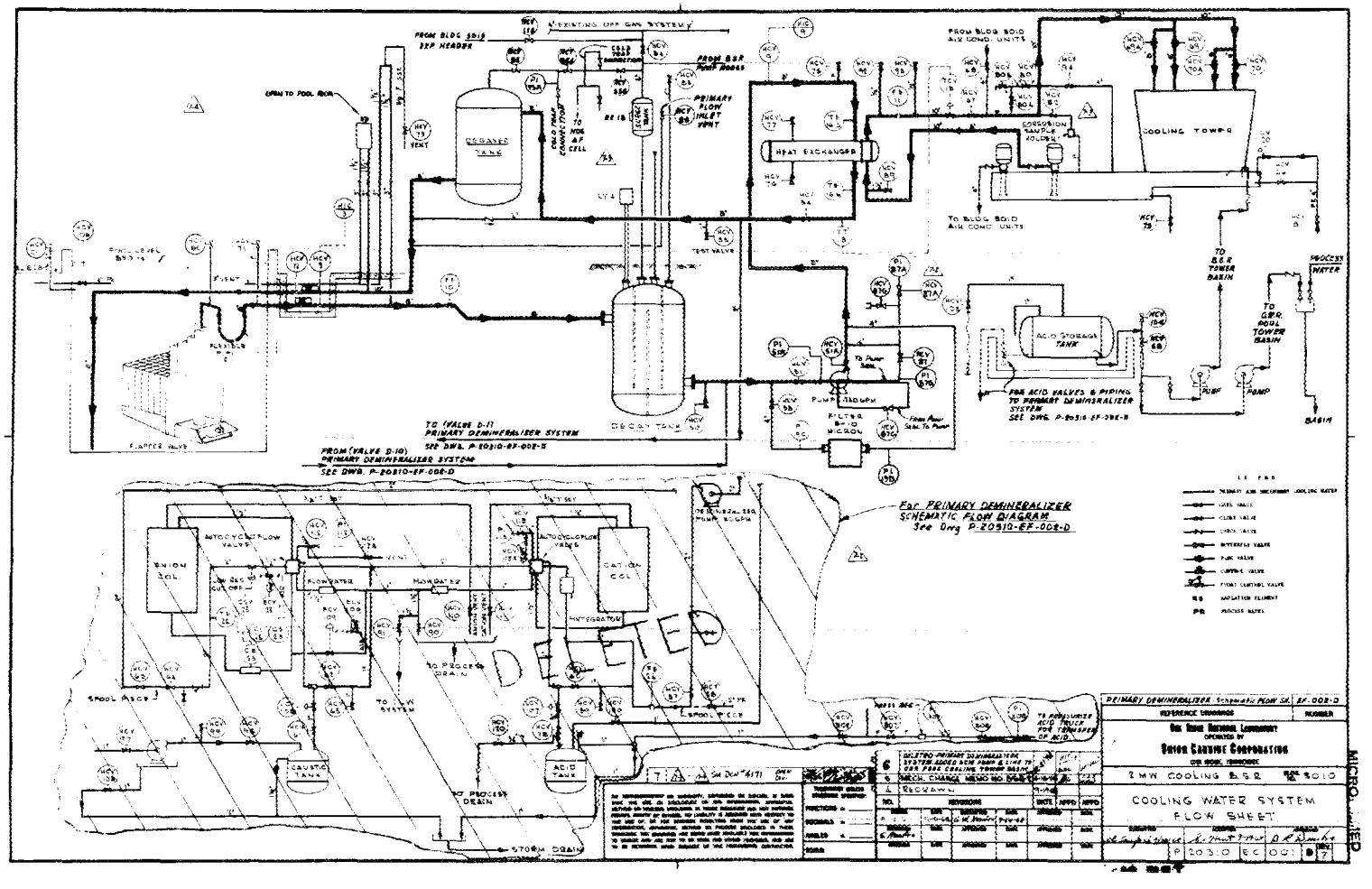

Fig. 6.1. 2 MW BSR cooling water system flow sheet.

ORNL DWG. 67-5973

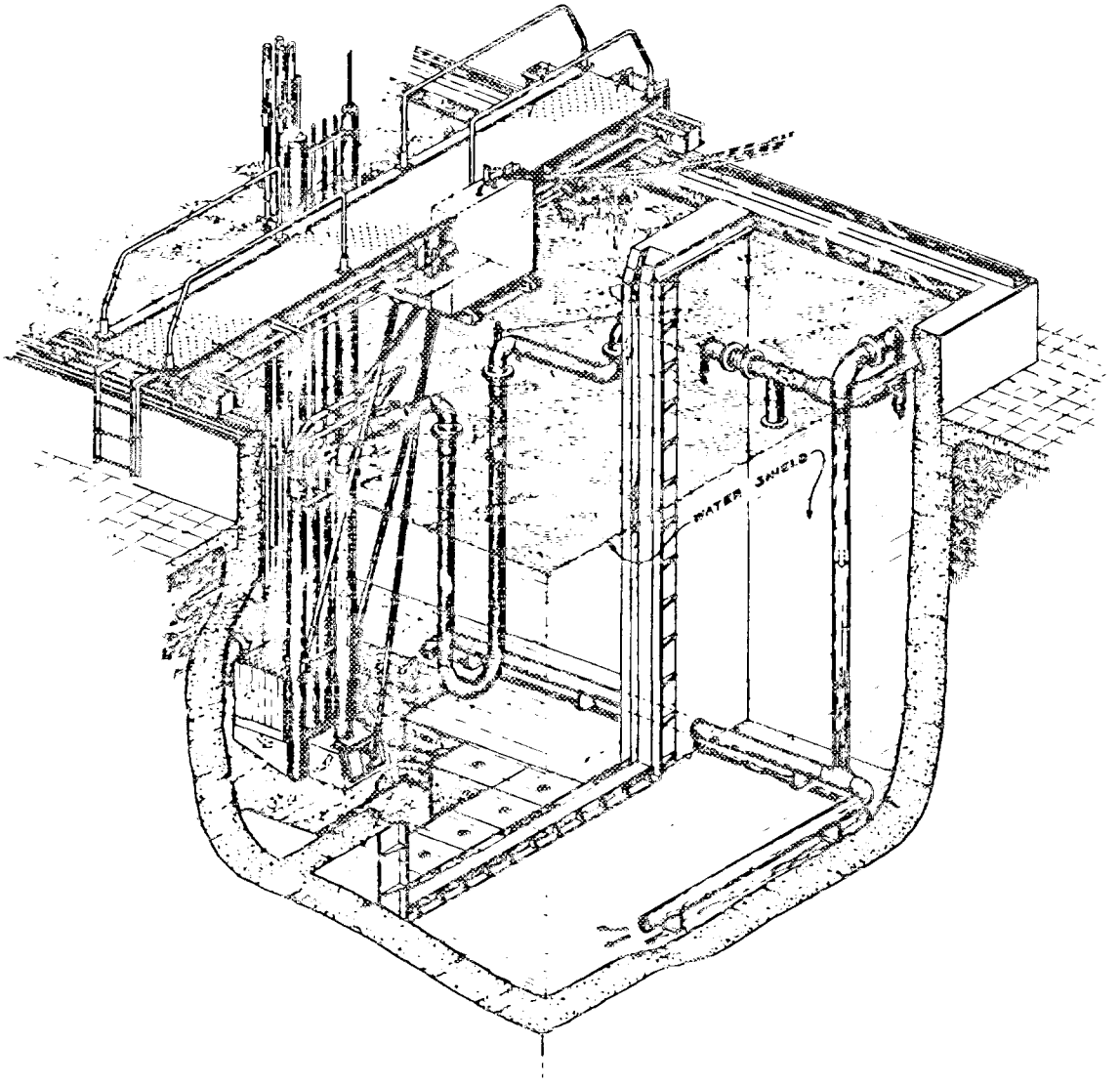

Fig. 6.2. Isometric drawing of the BSR.

ORNL DWG. 67-5975

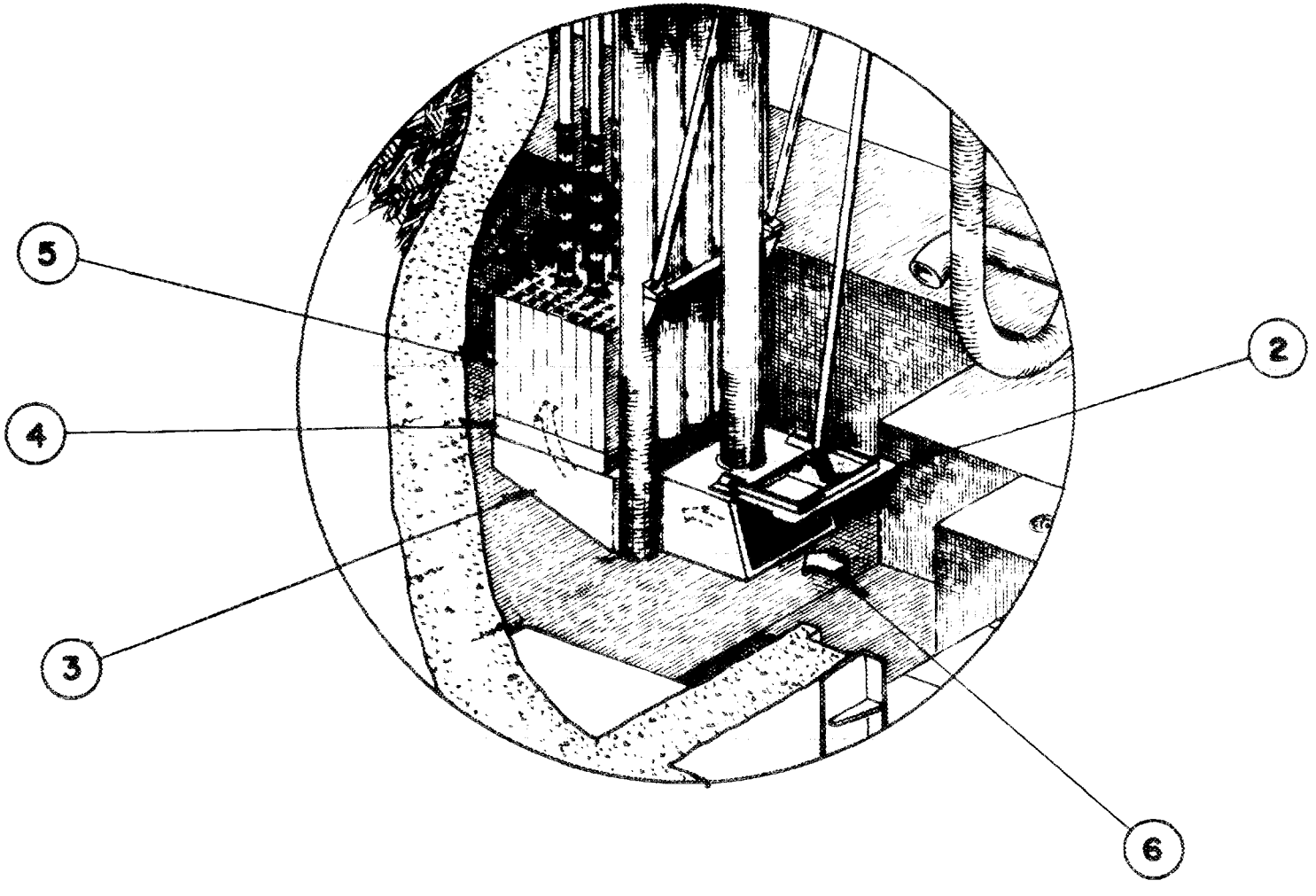

Fig. 6.3. Restricted isometric view of the BSR showing the flow path for natural-convection cooling during Mode 1 operation.

Forced convection is established by pumping water from the decay tank to the pool, thus creating a differential static head between the pool water level and the level in the decay tank. This differential head causes water to flow downward through the reactor core, through the manifold, and then through both movable and fixed piping to the decay tank. The movable piping consists of: the 8-in.-diam (schedule 40 pipe) riser; the 8-in.-diam inverted U-section; the flexible stainless steel pipe;[1] and the shaft swivel arm which is located just north of the east dam jamb. (On both ends of the flexible stainless steel pipe and on the end of the shaft swivel arm which terminates just north of the east dam jamb are swivel joints.[2,3] These joints and the flexible stainless steel bellows allow the reactor to be positioned at any location within a 12-ft-long by 25-ft-wide area.) The swivel arm

---

[1]The flexible pipe is corrugated stainless steel, 8-in.-diam with 0.020-in.-thick walls.

[2]Swivel action at the ends of the bellows is permitted simply by use of moderately loose-fitting straight threads on the stainless bellows cuffs and the mating aluminum fittings. About 2-in. of threads are used to minimize leakage and the loose fit permits free rotation. A maximum rotation of 1 1/2 turns of the flexible pipe is permitted.

[3]The swivel arm is attached to the fixed piping by use of a lap-joint flange having machined Teflon gaskets between the metal surfaces. This permits easy rotation of the swivel arm with only a slight loosening of the flange bolts.

is attached at one end to the fixed piping which is described below.

From the north side of the east pool jamb to the southeast corner of the pool wall, the fixed exit piping is 8-in.-diam aluminum pipe (except for a short 8-in. stainless steel expansion joint). From the southeast corner of the pool wall, past radioactivity monitor RIM-5, through the hand-controlled, air-positioned exit valve (HCV-3) to just outside the southeast wall of the building, the piping is 12-in, schedule 40 stainless steel pipe. From the southeast wall of the building to the decay tank, the exit water flows through 8-in schedule 10 stainless steel pipe. The reactor flow orifice plate is located in this portion of the line. (The orifice plate is 1/8-in. thick and has a 6.1086-in. bore.) The water is discharged into the bottom of the east side of the decay tank. After passing around the transverse baffle, the water is withdrawn from the bottom of the west end of the decay tank by the primary circulating pump. From the discharge of the pump, the water is forced through the shell side of the heat exchanger via HCV-54 to the degasser tank. The water is introduced to the degasser tank and swirls clockwise until it is removed and allowed to return to the pool. (The air volume above the water level in the degasser tank is connected to the normal off-gas system. In addition, the air volume above the water level in the decay tank is connected to the normal off-gas system via the off-gas surge tank. The radioactivity of the gas introduced to the normal off-gas system is monitored at the surge tank by RIM-18.)

The bypass demineralizer is supplied approximately 26 gpm from the discharge of the shell side of the heat exchanger; the demineralizer, which consists of a cation bed and an anion bed, returns its effluent just upstream from the primary circulating pump. (When the primary pump is shut down and HCV-54 is closed, the demineralier circulates water backward through the system. The inlet water is supplied by the 2-in. bypass line around the degasser tank and the demineralized water is returned to the pool via the normal pool water exit line.)

6.1.4. General precautions

1. Before establishing forced cooling flow, ensure that the main inlet and exit line valves (HCV-3 and HCV-72), located in the valve pit, are open and that HCV-54* is closed. (It is possible to overflow the pool and to shock the degasser tank if forced cooling flow is improperly established.)
2. Avoid large or sudden changes in the decay tank water level. (Improper valving could result in such changes.)
3. Before establishing forced cooling flow, ensure that proper communication is established between personnel in the control room and personnel in the pump house or in other similar areas.

---

*HCV-54 is located under the heat exchanger in the primary exit line.

4. Do not attempt to start the primary pump motor when operating in Mode 1 (with the flapper valve fully open, interlocks prevent starting the pump.)
5. Ensure that any changes in the status of the cooling system are understood before any reactor startup.
6. If there is any doubt concerning the condition of the primary system or related equipment, then the reactor supervisor or his designated alternate should be consulted prior to continuing or beginning operation.

6.1.5. Operational procedures

1. To establish flow in the primary system

   a. Determine that conditions in the primary loop are in compliance with Section 6.1.4, part 4, "General Precautions."

   b. Determine that the primary pump packing gland cooling water supply has been established (see Fig. 6.4). (NOTE: Without the cooling water flow, the packing gland will overheat within minutes.) The cooling water supply is established as follows:

      (1) Close valve G-2.

      (2) Open G-1 and G-3.

      (3) After the primary flow has been established, adjust G-3 to give approximately 40 psi water pressure along with adjustments to the packing gland to give approximately 60 drops per minute leak rate at the packing gland. (NOTE: Adjustments on the packing gland should be made only by the maintenance group.)

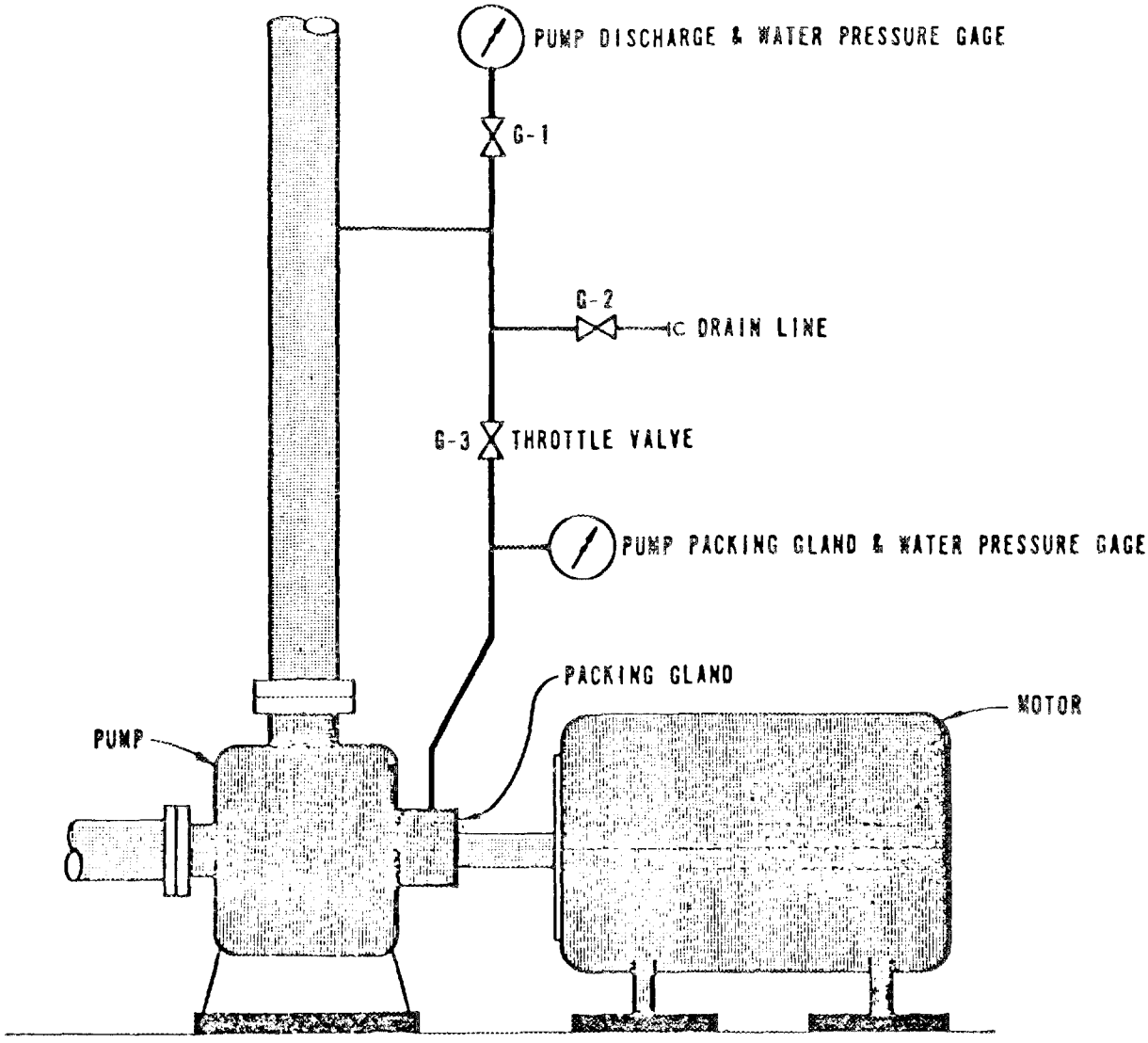

Fig. 6.4. Reactor primary pump packing gland cooling water supply.

The pump packing gland leak rate should be checked daily when the pump is in service. An excessive leak rate will result in excessive water loss from the pool water system. If an adjustment on packing gland leak rate is necessary on an off shift, the adjustment may be accomplished by the throttle valve (G-3). (NOTE: During the startup of the pump against closed HCV-54, the pump discharge pressure reaches approximately 70 psi; therefore, after each startup of the pump, the leak rate should be checked since the pump startup high pressure may cause a higher leak rate. Normally, the only maintenance necessary to the packing gland is an occasional adjustment by the maintenance group when the leak rate becomes excessive.)

c. Energize the circulating pump using the controls on the control room panel. (The electrical switchgear at the pump house normally remains energized; if the pump does not start, check the local controls.)

d. Slowly open valve HCV-54 until a flow rate of approximately 1220 gpm is indicated by the recorder in the control room. Also observe the decay-tank-level indicator. The water level in the decay tank should remain above 160-in.

e. Slowly close valve HCV-3 (HCV-3 is remotely operated from HIC-3 on the control room panel) until

a flow rate of about 1200 gpm is indicated by the recorder in the control room. Also observe the decay-tank-level indicator; it should stabilize at about 150-in.

(NOTE: The core ΔP should be about 6.0 in. H_2O with the shim rods withdrawn and with a flow rate of approximately 1200 gpm; if it is appreciably lower than this, check the flapper valve and check the swivel joint located in the northeast side of the dam jamb. If the ΔP is much too high, check the core for obstructions.)

2. To stop flow in the primary system

   a. Turn the pump control knob on the control room panel to the OFF position. (NOTE: Flow from the pump to the pool will be stopped very soon after the pump is turned off; however, flow from the pool to the decay tank will continue until the decay tank and its associated vent lines are filled to the pool level.)

   b. Open the flapper valve.

   c. Close valve HCV-54 (pump exit).

   d. Open valve HCV-3 (reactor exit) to the fully open position.

6.1.6. Cooling system startup checks for Mode-1 operation

Mode 1 is categorically the "low-power-range" of operation. Reactor power level in this mode of operation is restricted to 1 MW or less; in this mode, the flapper valve is open and the core is cooled by natural convection. (NOTE: This mode is administratively restricted to those times when

reactor operation is required while the forced cooling system is not operable.)

Section C of the "BSR Start-Up Checklist" shall be completed prior to operating the reactor in this mode. The following items shall be checked or accomplished before operating the reactor in Mode 1; these items are not necessarily listed in the order in which they appear in Section C of the BSR startup checklist.

1. Pool filled to proper level and all pool-level alarms cleared. The pool water is maintained at a level between 4 and 7 in. from the top of the pool parapet. If the water is raised above the 4-in. level, it will overflow to the storm drain through the 1 1/2-in. overflow pipes located at each corner of the pool. If the water level is lowered below 8 in. from the parapet, the skimmer cannot be used (see Section 6.1.8 for procedural details on filling and draining the pool).
2. Flapper valve in fully open position. To open the flapper valve, unlock the yellow-handled lever on the reactor bridge and rotate the lever 180° (until the handle points east and the guide pin on the gear mechanism falls into position); visually inspect the flapper valve and check the annunciator and indicator lights in the control room (with the flapper valve fully open, interlocks prevent starting the primary pump).

3. Demineralizer in service. The primary demineralizer unit located at the pump house and described in Section 6.1.10 of this manual is normally in service continuously; however, when this unit is unavailable for use during extended periods of time, the auxiliary unit should be placed in service.

   The auxiliary unit, located on the west side of Building 3010, is normally in standby. If it is to be placed in service, refer to Section 6.1.10, part 2.

4. Water purity adequate. The normal resistivity of the water entering the primary demineralizer is approximately 1,000,000 ohm-cm; the normal resistivity of the water leaving it is 2,000,000 ohm-cm. (The corresponding values for the auxiliary demineralizer are 700,000 and 1,000,000, respectively.) The pH of the reactor cooling water should be between 5.5 and 6.5. The last two figures are nominal limits which may be exceeded for short periods of time without requiring a reactor shutdown. If the resistivity of the water leaving the demineralizer is not higher than that of the water entering, the demineralizer should be removed from service.

5. Skimmer system in operation. The skimmer system serves to remove floating debris from the water. Operation is desirable, but not mandatory. The system is described in Section 6.1.9 of this manual.

6. Jets on for operation above 100 kW. The water jets are used to help minimize direct radiation from the surface of the pool due to ^{16}N activity. Procedures for their operation are included in Section 6.1.9.

6.1.7. Cooling system startup checks for Mode-2 operation

Mode 2 is categorically the "forced convection" mode of operation; the flapper valve is closed and the core is cooled by the forced-flow system. In this mode, the reactor may be operated at power levels up to 2 MW.

Section D of the BSR startup checklist shall be completed prior to operating the reactor in this mode. The following items shall be checked or accomplished before operating the reactor in Mode 2; these items are not necessarily listed in the order in which they appear in Section D of the BSR startup checklist.

1. Pool filled to proper level. Same as indicated in Section 6.1.6.
2. All pool level alarms cleared. Same as indicated in Section 6.1.6.
3. Primary cooling system filled and vented. Under normal operating conditions, it is not necessary to fill or vent all portions of the primary system. Normally, the system remains filled with water and venting may be accomplished, before starting the primary pump, by momentarily opening vent valves HCV-75 and HCV-76 (both located in the heat-exchanger room). However, if any portion of the system had been drained for any reason, then that portion would have to be refilled with pool water as detailed in Section 6.1.8.

It should be realized that some bubbles of air would, in all probability, be discharged to the pool even after venting is accomplished if the system had recently been filled. However, excessive bubbling should call for an investigation of possible leaks. The primary pump has been the source of such difficulties in the past and should be checked for excessive noise and to ensure that there is sufficient water flow to the seals.

4. Flapper valve in fully closed position. To close the flapper valve, unlock the yellow-handled lever on the reactor bridge and rotate the lever 180° (until the handle points west and the guide pin on the gear mechanism falls into position); visually inspect the flapper valve and check the annunciator and console indicator lights in the control room.
5. Primary cooling system flow established. Forced convection is required (administrative requirement) for 2-MW operation. The primary flow should be stable at a rate of approximately 1200 gpm. The decay tank level should be about 150 in. and the core ΔP about 6.0 in. of H_2O. A detailed procedure for establishing flow in the primary system is presented in Section 6.1.5.
6. Demineralizer in service. This is the same as in Section 6.1.6.

7. Bypass filter in service. It is not required that the bypass filter be in service; however, its status should be noted prior to each startup.
8. Secondary cooling system filled, treated, and ready for service. If the temperature of the water returning to the pool increases to about 105°F (measured at the exit line of the heat exchanger), the secondary water system should be placed in service. For details of this procedure, refer to Section 6.2.5.
9. Both the exit-water and decay-tank off-gas-activity monitors. Check to see that the radiation levels increase as the power level is raised to 2 MW (indicated on the multipoint recorder chart). At 2 MW, normal radiation levels are 80 mr/h at the shielded exit water line and approximately 5 mr/h at the normal off-gas surge tank.
10. Skimmer system in operation. This is the same as in Section 6.1.6.

6.1.8. Filling and draining the pool and primary water lines

Under normal operating conditions, water will have to be added to the pool periodically to compensate for losses due to evaporation and possible leakage.

1. To add water to the pool
   a. Open the demineralized-water-supply valve in Building 3004. (This valve normally remains open.)
   b. Open valve C-1 located on the west wall of Building 3010.

c. Close valve C-1 when the proper water level is attained. (Also close the demineralized-water-supply valve in Building 3004 if required by special conditions.)

2. To drain the pool

a. Determine the level to which the water will be lowered; if significant enough to create a radiation hazard, relocate the radioactive material accordingly. Notify all experiment personnel, expecially the liquid-helium-cryostat personnel. Check the radioactivity present in the water to determine that it is sufficiently low to permit draining.

b. Before the water level of the pool is lowered, the ground water level should be checked by using the ground water wells. The ground water wells are vertical 8-in. aluminum pipes extending to the top of the parapet that have covers and are located in the pool. The wells are located at the east pool wall directly outside the BSR Control Room office, at the west pool wall directly outside the entrance to Building 3080, and at the northwest corner of the pool. Deep well pumps should be used to maintain the ground water level below the pool floor level.

c. Close valves HCV-3 and HCV-72 located in the valve pit if the pool is to be drained below the 825-ft., 10-in. elevation.

d. Portable pumps should be used to pump the pool water to any convenient storm drain or sump.

3. To fill the decay tank

   a. Close valve HCV-50 at the pump (if this valve had been used to drain the line).

   b. Close vent valve HCV-73 on the syphon-break line (if this valve is open).

   c. Slowly open valve HCV-3 in the valve pit while observing the decay-tank-level indicator in the control room.

   d. When the decay tank is filled to about 150 in., close vent valve HCV-83; and, if it is not already opened, open off-gas valve HCV-84 about 4 turns.

4. To drain the decay tank

   a. Close valve HCV-3 in the valve pit.

   b. Close valve HCV-51, -53, and -65 at the inlet to the circulating pump.

   c. Close valve HCV-84 to the off-gas system (located at the southeast corner of Building 3010).

   d. Open valve HCV-50 at the pump. (A fire hose must be connected to the discharge of this valve to route the water to the storm drain.)

   e. Open valve HCV-83 (vent line on top of tank).

   f. Open valve HCV-73 (vent line on syphon-break line).

      (NOTE: Due to the elevation of the drain valve, this procedure will lower the water level in the decay tank to about 60 in., as indicated on the gauge. To empty the tank completely, the

water will have to be pumped out. If only limited draining is necessary, the primary pump and HCV-9 can be used to lower the water level in the decay tank.)

5. To fill the primary (shell) side of the heat exchanger
   a. Be sure all drain- and vent-line valves are closed.
   b. Open valve HCV-54 at the heat exchanger.
   c. Open valve HCV-72 in the valve pit (east walkway).
   d. Open vent valve HCV-77.
6. To drain the primary (shell) side of the heat exchanger
   a. Close valves HCV-72 and HCV-54.
   b. Open drain-line valve HCV-76 underneath the heat exchanger. (A hose must be connected to the discharge of this valve to route the water to the storm drain.)
   c. Open vent-line valve HCV-77 on top of the heat exchanger.
7. To fill the inlet and exit lines and the circulating pump
   a. Fill the lines to the pump inlet and pump exit valves, as described in the above procedures.
   b. Close drain-line valves.
   c. Open valves HCV-3 and HCV-72.
8. To drain the inlet and exit lines and the circulating pump
   a. Close valves HCV-51 and HCV-87.
   b. Open the drain-line valve located on the bottom of the pump.

6.1.9. Operation of skimmer and nitrogen-16 jets

A water skimming device, located in the southeast corner of the pool, is used to help keep debris from the surface of the water. Water is drawn from the skimmer bucket by an electrically driven pump and pumped through a filtering unit, located on the west side of the pool, before being returned to the pool. To place the skimmer in service:

1. Position the skimmer bucket slightly below the surface of the water.
2. Open valve A-1 at the inlet to the pump.
3. Close valves A-2, A-4, A-6, A-7, and A-9.
4. Open valves A-5, A-8, A-13, and A-15.
5. Energize the pump motor ("filter pump" controls on the south wall of the reactor bay).

(NOTE: If sufficient air enters the pump suction line, the pump will be shut off by the pump-discharge pressure switch, which is set at 10 psi. If this occurs, open the vent valve on top of the pump after the pump stops rotating and bleed the air from the pump. Restart the pump temporarily and then allow the pump to stop rotating. Open the vent valve again. Continue this sequence until the pump continues to operate.)

To help minimize the direct radiation from the surface of the pool due to ^{16}N activity, jets of water are directed across and above the reactor core to delay the surfacing of irradiated water. To place the jets in service:

1. Place the skimmer in operation (the pump is common to both systems).

2. Open valve A-14 and close valve A-15 (located on the west wall of the reactor bay).

To remove the jets from service, open valve A-15 and close valve A-14.

6.1.10 Demineralizer units (primary and auxiliary) - description and procedures

In a reactor cooling system, the radioactivity level, the rate of corrosion, and the rate of deposit formation must be clearly controlled. At the BSR, these objectives are met by demineralizing the cooling water.

All of the components in the reactor cooling loop are made of aluminum or stainless steel. That portion of these materials which dissolves in the water, dissolved gases, and fission products which diffuse through the fuel cladding constitute most of the impurities found in the primary loop. A slight amount of demineralized water is added to the system periodically to supplement that lost through evaporation. It is essential that the primary water have as few impurities as possible since it passes through the high-neutron-flux core region where impurities become highly activated, so some cooling water is continually bypassed through one of the demineralizers to remove trace impurities.

Three checks are available for judging the purity of the water in the reactor system. The first is the radioactivity level measured in disintegrations per minute per milliliter. The second is pH, a measure of the acidity or basicity of the water. The third is the electrical resistance or resistivity of the water. All three parameters are measured once per week.

In general practice, the water resistivity and the water activity checks have been the best guides to the effectiveness of a unit and to the need for regeneration of the demineralizers.

There are two demineralizer units servicing the primary water system. One unit, located in the pump house, is referred to as the primary demineralizer. A second unit, located on the west side of Building 3010, is referred to as the auxiliary demineralizer. The auxiliary demineralizer is normally not in service. The primary demineralizer is, by contrast, normally in service continuously.

With primary flow, part of the water from the heat exchanger, enroute to the pool, is pumped through the demineralizer and then returned to the inlet line of the primary pump. Without primary water flow and with the primary-pump exit valve, HCV-54, closed, water taken directly from the pool in the reverse-of-normal cooling flow is pumped through the demineralizer; then it is returned to the inlet line of the primary pump. From the inlet of the primary pump, the demineralized water flows through the decay tank (in reverse-of-normal flow) to the pool.

1. <u>The primary demineralizer</u>. There are two flow paths for the water passing through the primary demineralizer. The path followed depends upon the status of the primary cooling system, i.e., flow or no flow.
   a. Description. The unit is a dual-bed demineralizer with a rated flow of 30 gpm. The cation unit consists of a polyvinyl chloride (PVC) lined tank (30 in. in dia. and 72 in. high), containing 14 ft^3 of IR-200 resin. The resin bed is 34 in. high.

The cation-regenerant tank (24-in.-dia. and 31 3/4 in. high) has a volume of 1.96 gal per in. of depth. A drain line at the bottom of the tank, containing valve D-45 and line plug, facilitates periodic flushing and cleaning.

The anion unit consists of a PVC-lined tank (30-in.-dia. and 96 in. high) containing 23 ft^3 of IRA-400 resin. The resin bed is 56 in. high.

The anion-regenerant tank (36-in.-dia. and 39 in. high) has a volume of 4.41 gal per in. of depth. A drain line at the bottom of the tank, containing valve D-46 and line plug, facilitates periodic flushing and cleaning.

b. Procedures. The unit is to be removed from service and regenerated if the resistivity of the effluent is lower than that of the primary water or if the pH is not within the limits of 5.5 and 6.5 (NOTE: 22.5 gal of sulfuric acid is used to regenerate the cation resin; 21.7 gal of 50% sodium hydroxide will be required for each regeneration of the anion resin.)

The following example (Example 6.1) includes procedures for removing the demineralizer from service, regenerating the unit, and placing it back in service.

Procedural checklist for regenerating the BSR primary demineralizer

Objective	Procedure	Remarks
1. Outline the procedure.	Initial each step in the procedure and record the data where indicated. Use margins to comment on needed equipment repairs or other items needing attention. Refer to the schematic diagram (Figure 6.5) for valve location and demineralizer flows. Throughout the procedure, encircle listed valve numbers to indicate that the required manipulation (open or close) has been done.	This procedure also serves as a checklist. It is provided to ensure that all valves in the demineralizer system are placed in the proper mode so that regenerant solutions are routed correctly into the reactor cooling system. The procedural checklist will be issued to the operator performing the regeneration. (NOTE: Whenever the demineralizer is regenerated, a checklist must be filled out. Upon completion of the regeneration, the checklist must be returned to the supervisor in charge.)
2. Allow for radioactive decay of the resin bed.	If the BSR is operating or operation is planned before starting a regeneration, remove the demineralizer from service the day prior to the regeneration.	This step will reduce the radiation exposure to the operating personnel during the regeneration.
3. Remove the demineralizer from service.	De-energize the demineralizer pump motor.	The controls are located in a breaker box at the lower left area of the breaker panel on the west wall of the pump house.

Example 6.1.

Example 6.1. (continued)

Objective	Procedure	Remarks
3. (continued)	Turn the air-operated effluent valve switch (D-8) to CLOSE.	The switch is located on the demineralizer panel. The standby light will be energized.
	Close the following valves: D-1, D-2, D-3, D-4, D-5, D-6, D-7, D-9, and D-10.	
	THIS STEP WAS COMPLETED BY:	
	_____ on _____	
4. Prepare for regeneration.	Remove the inlet and exit spool pieces; they are identified by red tape on the flanges. Install the 18-in. spool piece between the inlet line to the demineralizer and valve HCV-58 in the process water line.	This step ensures that the regenerant fluids will not be added inadvertently to the reactor system and provides a source of process water for the regeneration.
	Have the Health Physicist survey the cell and prepare a Radiation Work Permit as needed.	
	Obtain the integrator reading: _____.	Record the integrator reading in the BSR log book for the end of run.

Example 6.1. (continued)

Objective	Procedure	Remarks
4. (continued)	Call the Tank Farm operator and obtain permission to send approximately 2000 gal of liquid waste to the Intermediate-Level Waste (ILW) System (WC-19).	
	Turn the Beckman demineralizer conductivity instrument OFF.	This instrument is located in the BSR control room.
	THIS STEP WAS COMPLETED BY: _____ on _____	
5. Transfer acid from the acid storage tank to the acid regenerant tank.	Check the sight glass on the regenerant tank to ensure that the tank is empty.	
	Open, in sequence, the following valves: HCV-101, HCV-100, and HCV-302; acid will begin flowing into the acid regenerant tank. Observe the level increase in the acid regenerant tank (as indicated by the sight glass). When the acid level is at the 6-in. mark, close valves HCV-302 and HCV-100; then alternately open and close these valves to bring the level to 8-in.	HCV-302 and HCV-100 should be closed at the 6-in. level mark to prevent exceeding the 8-in. level mark due to an additional rise of the acid level after the closing of HCV-302 and HCV-100.

Example 6.1. (continued)

Objective	Procedure	Remarks
5. (continued)		Open and close HCV-100 and HCV-302 as needed in increments until the acid level is at the 8-in. mark. With the liquid at the 8-in. mark on the sight glass, the acid regenerant tank will contain 22.5 gal of H_2SO_4.
	When the acid level reaches the 8-in. mark, close the following valves: HCV-302, HCV-100, and HCV-101. THIS STEP WAS COMPLETED BY: _____ on _____	
6. Prepare the caustic regenerant solution.	Position the bottom tip of the Probatrol level probe exactly 5 in. below the surface level of the caustic. (NOTE: Fill the caustic regenerant tank following step 19, if necessary.) THIS STEP WAS COMPLETED BY: _____ on _____	The Probatrol (a liquid level sensing device) can be adjusted vertically from 1 in. above the bottom of the caustic regenerant tank to 6 in. below the top of the tank.

Example 6.1. (continued)

Objective	Procedure	Remarks
7. Backwash the cation resin.	Open the following valves: D-13, D-12, D-11, and D-3. Open valve HCV-58 (process water supply) and establish a 25-gpm backwash flow.	A 50% expansion of the resin bed is necessary for an efficient backwash; therefore, a 25-gpm backwash flow is necessary.
	Time: _____	Enter the time that the backwash is started for calculation of the amount of waste sent to the ILW system (WC-19).
	Open valve D-14 (cation column vent). After all the air has been bled from the column, close valve D-14.	This step ensures that the column is filled with water.
	Readjust valve HCV-58 if needed to maintain the 25-gpm backwash flow.	

Example 6.1. (continued)

Objective	Procedure	Remarks
7. (continued)	Terminate the cation resin backwash after a backwash flow of 25 gpm for 15 minutes by closing the following valves: D-13, D-12, D-11, D-3, and HCV-58. (NOTE: The underlined valve may be left open if acid injection is to be the next step.)	Closing the valves in this order will leave the column filled with water and subsequently minimize "channeling" when the regenerant flow is established.
	Time: _____	Enter the time that the backwash is stopped for calculation of the amount of waste sent to the ILW system (WC-19).
	_____ gal to WC-19 for the cation backwash.	
	THIS STEP WAS COMPLETED BY:	
	_____ on _____	
8. Inject acid into the cation column.	Open, in sequence, the following valves: D-16, D-17, D-13, and D-15. Open HCV-58 and establish a 7.5-gpm flow through the jet eductor.	
	Time: _____	Enter the time that the acid injection flow was started for calculation of the amount of waste sent to the ILW system (WC-19).

Example 6.1. (continued)

Objective	Procedure	Remarks
8. (continued)	Check that valve D-18 (located on the check valve rinse line) is closed.	This valve must be closed to allow pickup of the acid by the jet eductor.
	Remove lock from valves D-19 and D-20.	
	Open valve D-19.	
	Open valve D-20 in increments until the acid level drop, as indicated in the sight glass, is 1/2 in. per minute. The acid injection will be completed approximately 10 min after the acid level leaves the sight glass. At the end of the acid injection, the jet eductor housing will be cool to the touch.	The specific gravity of the required 5% solution should be between 1.028 and 1.045. The specific gravity can be checked by securing a sample of the solution via valve D-21 at the process waste drain.
	When the acid injection is completed. close the following valves: D-19 and D-20.	The next step (slow rinse) will be a continuation of the acid injection process water flow.
	Time: _____	Enter the time which is the termination of acid injection and the start of slow rinse for calculation of the amount of waste sent to the ILW system (WC-19).
	_____ gal to WC-19 for the acid injection.	
	THIS STEP WAS COMPLETED BY:	
	_____ on _____	

Example 6.1. (continued)

Objective	Procedure	Remarks
9. Slow rinse the cation resin.	Slow rinse the cation resin for 30 min at a flow of 7.5 gpm. Terminate the cation resin slow rinse by closing valves D-15 and D-16. Time: _____ _____ gal to WC-19 for the cation slow rinse. THIS STEP WAS COMPLETED BY: _____ on _____	This is a continuation of the acid injection water flow. Enter the time which will be the end of the cation slow rinse for calculation of the amount of waste sent to the ILW system (WC-19).
10. Flush the acid line between the jet eductor and the check valve at the acid regenerant tank.	Open valves D-18 and D-19. Open valve D-20 only enough to establish a small flow through the flush line to the floor drain. When the check valve housing is cool to the touch, close the following valves: D-17, D-18, D-19, D-20, D-13, and HCV-58 (NOTE: The underlined valves may be left open if the cation fast rinse is to be the next step.)	This step will remove the acid trapped between the check valve and the jet. (NOTE: If excessive water pressure is applied above the check valve and the check does not seat properly, water may enter the acid regenerant tank which can be noted by the excessive heat created by the water mixing with the small amount of acid remaining in the tank along with indication of liquid level in the tank.)

Example 6.1. (continued)

Objective	Procedure	Remarks
	Lock D-19 and D-20 in the CLOSED position. THIS STEP WAS COMPLETED BY: _____ on _____	
11. Fast rinse the cation resin.	Open the following valves: D-3, D-4, D-15, and D-13. Open HCV-58 and establish a 25-gpm flow. Open D-14 (cation vent line). After air has been bled from the column, close D-14.	Fast rinse the cation resin for 42 min at 25 gpm.
	Time: _____	Enter the time that the fast rinse flow was started for calculation of the amount of waste sent to the ILW system (WC-19).
	When the counts of the cation fast rinse effluent is <1000 counts min^{-1} ml^{-1} (usually approximately 10 min after fast rinse is started), switch from the ILW to the process waste system by closing valve D-13 and opening D-22.	This prevents sending an excessive amount of waste to the ILW system (WC-19).

Example 6.1. (continued)

Objective	Procedure	Remarks
11. (continued)	Time: _____ _____ gal to WC-19 for the cation fast rinse.	Enter the time which will be the end of the cation fast rinse to the ILW system and the start of the fast rinse to the process drain.
	Terminate the cation resin fast rinse by closing the following valves: D-22, D-15, D-4, D-3, and HCV-58. (NOTE: The underlined valves may be left open if the anion resin backwash is to be the next step.)	
	Time: _____ _____ gal to the process drain for the cation fast rinse.	Enter the time that the cation fast rinse was stopped for calculation of the amount of waste sent to the process drain.
	THIS STEP WAS COMPLETED BY: _____ on _____	
12. Backwash the anion resin.	Open the following valves: D-3, D-4, D-5, D-23, D-24, and D-13. Open HCV-58 and establish a 15-gpm backwash flow.	A 50% expansion of the resin bed is necessary for an efficient backwash; therefore, a 15-gpm backwash flow is necessary.

Example 6.1. (continued)

Objective	Procedure	Remarks
12. (continued)	Time: _____	Enter the time that the backwash is started for calculation of the amount of waste sent to the ILW system (WC-19).
	Open valve D-25 (anion column vent). After all the air has been bled from the column, close valve D-25.	This step ensures that the column is filled with water.
	Readjust valve HCV-58 if needed to maintain the 15-gpm backwash flow.	
	Terminate the anion resin backwash after a backwash flow of 15 gpm for 15 min by closing the following valves: D-13, D-24, D-23, D-5, D-4, D-3, and HCV-58 (NOTE: The underlined valves may be left open if the caustic injection is to be the next step.)	Closing the valves in this order will leave the column filled with water and subsequently minimize "channeling" when the regenerant flow is established.
	Time: _____	Enter the time that the backwash flow was stopped for calculation of the amount of waste sent to the ILW system (WC-19).
	_____ gal to WC-19 for the anion backwash.	
	THIS STEP WAS COMPLETED BY:	
	_____ on _____	

Example 6.1. (continued)

Objective	Procedure	Remarks
13. Inject caustic into the anion column.	Open, in sequence, the following valves: D-3, D-4, D-26, D-27, D-28 D-29, and D-13. Open HCV-58 and establish a 7.5-gpm flow through the jet eductor.	
	Time: _____	Enter the time that the caustic injection flow was started for calculation of the amount of waste sent to the ILW system (WC-19).
	Turn the air-operated caustic suction valve switch to AUTO position. The valve (D-30) should open. An alternate move is to turn the caustic suction valve switch to OPEN position.	The switch is located on the demineralizer panel. In the AUTO position, the air-operated valve should close when the caustic level drops below the Probatrol. If the OPEN position if used, the air-operated valve will not close when the caustic level drops below the Probatrol.

Example 6.1. (continued)

Objective	Procedure	Remarks
13. (continued)	Unlock and open valve D-31 until the caustic level drop in the caustic regenerant tank is approximately 1 in. per minute (equivalent to a 5% NaOH solution). Go to the next step when 5 in. of the caustic has been injected.	Valve D-31 is located on the caustic line from the caustic regenerant tank to the eductor. The caustic tank will contain approximately 150 gal of caustic when filled to within 6 in. of the tank top. Since only 5 in. of the caustic is used for a regeneration, the caustic injection must be observed to prevent excessive use of the caustic. Refer to step 6.
	When the caustic injection is completed, close valve D-31 and lock in the CLOSED position. Turn the air-operated suction valve (D-30) switch to CLOSE position.	The next step (slow rinse) will be a continuation of the caustic injection water flow.
	Time: _____ _____ gal to WC-19 for the caustic injection. THIS STEP WS COMPLETED BY: _____ on _____	Enter the time which is the termination of the caustic injection and the start of slow rinse for calculation of the amount of waste sent to the ILW system (WC-19).

Example 6.1. (continued)

Objective	Procedure	Remarks
14. Slow rinse the anion resin.	Slow rinse the anion resin for 30 min at a flow of 7.5 gpm.	This is a continuation of the caustic injection water flow.
	Terminate the anion resin slow rinse by closing the following valves: D-13, D-29, D-28, D-27, D-26, D-4, D-3, and HCV-58. (NOTE: The underlined valves may be left open if fast rinse for the anion resin is to be the next step.)	
	Time: _____	Enter the time that the slow rinse was stopped for calculation of the amount of waste sent to the ILW system (WC-19).
	_____ gal to WC-19 for the anion slow rinse.	
	THIS STEP WAS COMPLETED BY: _____ on _____	
15. Fast rinse the anion resin.	Open, in sequence, the following valves: D-3, D-4, D-5, D-6, D-29, and D-13. Open HCV-58 and establish a 25-gpm flow. Open D-25 (anion vent line). After air has been bled from the column, close D-25.	
	Time: _____	Enter the time which will be the end of the anion fast rinse to the ILW system and the start of the fast rinse to the process waste drain.

Example 6.1. (continued)

Objective	Procedure	Remarks
15. (continued)	Turn the Beckman demineralizer conductivity instrument ON.	This instrument is located in the BSR control room
	When the counts of the anion fast rinse effluent are <1000 counts min^{-1} ml^{-1} (usually approximately 10 min after the fast rinse is started), switch from the ILW to the process waste drain system as follows: close D-13 and open D-22.	This prevents sending an excessive amount of waste to the ILW system (WC-19).
	Time: _____	Enter the time which will be the end of the anion fast rinse to the ILW system and the start of the fast rinse to process waste drain.
	_____ gal to WC-19 for the anion fast rinse.	
	Terminate the anion resin fast rinse by closing the following valves: D-22, D-29, D-6, D-5, D-4, D-3, and HCV-58. (NOTE: The underlined valves may be left open if the pool water through rinse is to be the next step.)	Fast rinse the anion resin until the pH is <8.5 and the resistivity is >300,000 ohm/cm (usually approximately 50 min). The demineralizer through rinse can then be switched to pool water rinse.
		Excessive process water rinse will tend to start depletion of the unit unnecessarily.
	Time: _____	Enter the time that the fast rinse was stopped for calculation of the amount of waste sent to the process waste drain.
	_____ gal to the process drain for the anion fast rinse.	
	THIS STEP WAS COMPLETED BY	
	_____ on _____	

Example 6.1. (continued)

Objective	Procedure	Remarks
16. Through rinse the demineralizer with pool water.	Install the inlet-exit spool piece for in-service operation.	
	Open the following valves: D-1, D-2, D-3, D-4, D-5, D-6, D-29, and D-22.	Close observation will have to be made of the pool water level during the rinse. Add demineralized water from Bldg. 3004 to the pool as necessary.
	Start the demineralizer pump and adjust the through rinse to 25 gpm by D-29.	
	Time: _____	Enter the time that the through rinse was started for calculation of the amount of waste sent to the process waste drain which will also be the amount of water added to the pool from Bldg. 3004.
	Open valve D-14 (cation column vent). After air has been bled from the column, close D-14.	
	Open valve D-25 (anion column vent). After air has been bled from the column, close D-25.	

Example 6.1. (continued)

Objective	Procedure	Remarks
16. (continued)	Terminate the pool water through rinse for the demineralizer as follows: Turn the demineralizer pump off. Close the following valves: D-22, D-29, D-6, D-5, D-4, D-3, D-2, and D-1. (NOTE: The underlined valves may be left open if the demineralizer is to be placed in service as the next step.)	Through rinse the demineralizer unit until the pH is <6.5 and the resistivity is >800,000 ohm/cm.
	Time: _____	Enter the time that the through rinse is stopped for calculation of the amount of water sent to the process drain. This will also be the amount of water added to the pool as makeup water for the through rinse.
	_____ gal to the process drain for the pool water through rinse.	
	THIS STEP WAS COMPLETED BY: _____ on _____	
17. Place the demineralizer in service.	Recheck the valves at the acid regenerant tank. The following valves should be CLOSED: D-18, D-19, and D-20 (closed and locked); D-17, HCV-302, HCV-100, and HCV-101 (located at the acid storage tank).	
	Recheck the valves at the caustic regenerant tank. The following valves should be CLOSED. D-31 (closed and locked), D-30 (caustic suction valve switch turned to CLOSE), D-27, HV-98, and HV-99.	

Example 6.1. (continued)

Objective	Procedure	Remarks
17. (continued)	Recheck the valves in the demineralizer cell. The following valves should be CLOSED: D-16, D-12, D-11, D-26, D-15, D-28, D-24, D-23, D-29, D-32, D-21, D-25, D-14, D-22, and D-13.	
	Take the integrator reading: _____	Record the integrator reading in the BSR log book for the start of the run.
	Open, in sequence, the following valves: D-1, D-2, D-3, D-4, D-5, D-6, D-7, D-8 (turn the effluent valve switch to AUTO), and D-9. Start the demineralizer pump and slowly open D-10 and establish approximately 25 gpm flow if the pool primary pump is in service or approximately 20 gpm if the pool primary pump is shut down.	The air-operated effluent valve switch is located on the demineralizer panel. In the AUTO mode, the valve will close when the conductivity of the output water drops to 300,000 ohm/cm (0.3 on the conductivity instrument located in the control room) along with an alarm in the control room and pump house. The automatic closure of the effluent valve is bypassed if the switch is turned to the OPEN position. Valve D-10 is located on the exit line at the spool piece (primary pump side). The demineralizer flow should be adjusted so that a flow from the exit sampling line can be obtained at the sink. This will prevent negative pressure on the anion column.

Example 6.1. (continued)

Objective	Procedure	Remarks
17. (continued)	Vent air from the cation and anion columns as necessary.	This step ensures that the columns are filled with water.
	Take the exit water pH _____ and resistivity _____ readings.	Log the results in the BSR log book.
	THIS STEP WAS COMPLETED BY: _____ on _____	
18. Compute the amount of water sent to the waste system during the regeneration.		Log the total number of gal sent to the waste systems in the BSR log book.

	ILW (WC-19) (gal)	Process Drain (gal)
Cation backwash	_____	_____
Cation acid injection	_____	_____
Cation slow rinse	_____	_____
Cation fast rinse	_____	_____
Anion backwash	_____	_____
Anion caustic injection	_____	_____
Anion slow rinse	_____	_____
Pool water through rinse	_____	_____
Total	_____	_____

THIS STEP WAS COMPLETED BY:

_____ on _____

Example 6.1. (continued)

	Objective	Procedure	Remarks
19.	Flush and clean the acid regenerant tank.	Check the sight glass on the regenerant tank to ensure that the tank is empty. Check that valves D-17, D-18, D-19, D-20, D-39, D-45, HCV-100, and HCV-302 are closed.	This step ensures that the regenerant tank is isolated from all systems.
		Establish a flow of process water to the floor drain with the hose connected to valve HCV-114C.	This ensures that only very dilute acid enters the drain.
		Remove the plug from the regenerant tank drain line and connect the hose (provided). Place the end of the hose in the floor drain and open drain valve D-45.	The small amount of acid below the dip leg in the tank will drain out.
		Remove the flange from the top of the tank and flush the tank with process water.	Inspect inside of the tank <u>before</u> adding water to ensure that the tank contains <u>no</u> acid.
		Close the drain valve D-45 and fill the tank with process water. Open the drain valve D-45 to drain all water from the tank. Check that the water flow through the sight glass is satisfactory.	This step will completely rinse the tank.

Example 6.1. (continued)

	Objective	Procedure	Remarks
19.	(continued)	Close valve D-45, remove the drain hose, replace the drain plug and replace the flange on the tank top. THIS STEP WAS COMPLETED BY: _____ on _____	The tank is now in proper condition for use in the next regeneration, Step 5.
20.	Flush and clean the caustic regenerant tank.	When the caustic tank is empty, it should be cleaned before refilling. Check that valves D-27, D-30, D-31, D-40, D-46, HV-98, and HV-99 are closed. Remove the plug from the regenerant tank drain line and connect the hose (provided). Place the end of the hose in the floor drain and open the drain valve D-46. Flush and rinse the tank with process water with the hose connected to valve HCV-114C.	This step ensures that the regenerant tank is isolated from all systems.

Example 6.1. (continued)

	Objective	Procedure	Remarks
20.	(continued)	Close the drain valve D-46 and fill the tank with process water. Open the drain valve D-46 to drain all water from the tank.	This step will completely rinse the tank.
		Close valve D-46, remove the drain hose, and replace the drain plug.	The tank is now ready to be refilled with caustic, Step 21.
		THIS STEP WAS COMPLETED BY:	
		_____ on _____	
21.	Fill the caustic regenerant tank.	Connect the hose (provided) from the outlet connection on the caustic truck tank to the connection at HV-97.	HV-97 is located outside the BSR pump house (southeast corner).
		Open HV-97 and the truck's dump line valve.	
		Open HV-103.	This normally opened valve is located on the caustic transfer pump drain pan line to the storm drain.
		Open HV-99.	HV-99 is located at the caustic tank on the caustic line rinse connection.

Example 6.1. (continued)

Objective	Procedure	Remarks
21. (continued)	Open HV-98.	HV-98 is located at the caustic tank on the caustic fill line.
	Energize the caustic transfer pump.	The caustic transfer pump switch is located on the wall at the caustic tank.
	Observe the level of the liquid in the caustic regenerant tank; when the level is 1 in. below the overflow line, de-energize the caustic pump.	
	Close HV-98, HV-97, and the truck dump line. Reconnect the truck end of the unloading hose to the storm drain line.	
	Open HV-97.	
	Connect the water hose from the process water line to the line at HV-99.	
	Open HV-99 and HV-114C (process water supply).	This step will rinse the caustic transfer pump and lines with process water.
	Rinse the pump and caustic line for 10 min then close HV-99 and HV-114C.	
	THIS STEP WAS COMPLETED BY: _____ on _____	

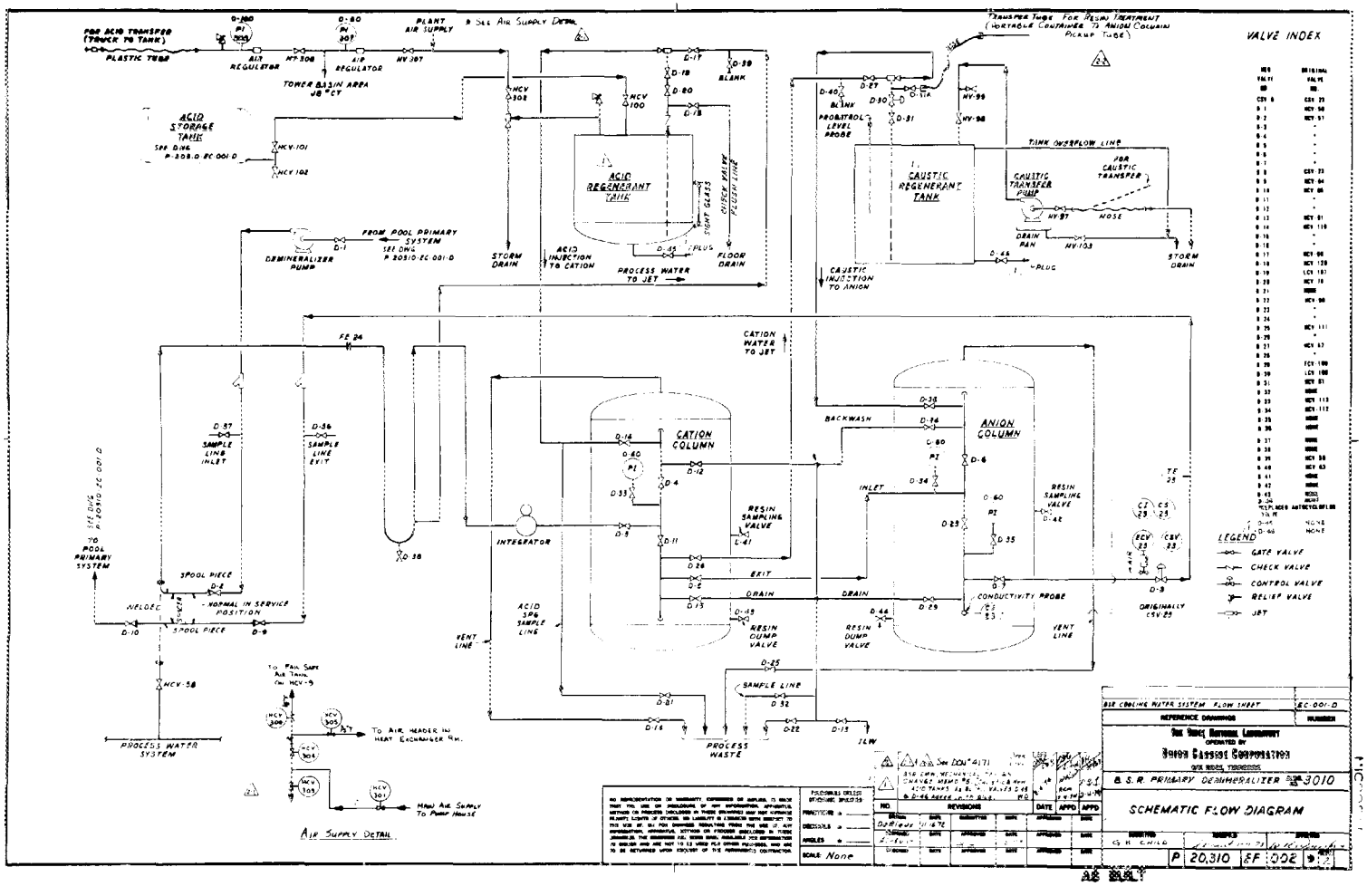

Fig. 6.5. Schematic flow diagram of primary demineralizer.

2. The auxiliary demineralizer

a. Description. The auxiliary demineralizer is an Elgin Ultra Deionizer consisting of a mixed-bed column (18-in.-dia. and 72 in. high), a regenerant tank (18-in. dia. and 18 in. high), a Micro-Klean filter, and auxiliary piping for regenerating. The column has a maximum operating pressure of 100 psig and a maximum flow rate of 18 gpm. The column contains 4.5 ft^3 of Amberlite IRA-400 resin and 3.0 ft^3 of Amberlite IR-120 cation resin.

Water to the demineralizer leaves the pool through a 1-in. line on the west wall of the pool and passes through valve B-1 prior to entry into the pump. The Tri-Clover pump forces the water through the mixed-bed column and the filter and returns it to the pool.

b. Procedure of Regenerating the Resins. The unit is to be removed from service and regenerated if the resistivity of the effluent is not more than that of the pool water or if the pH is not within the limits of 5.5 and 6.5.

The following example (Example 6.2) includes procedures for removing the demineralizer from service, regenerating the unit, and placing it back is service.

Example 6.2. Procedure for regenerating the auxiliary demineralizer

Objectives	Procedures	Remarks
1. Remove the demineralizer from service.	De-energize the pump. Close valves B-1, B-2, B-3, and B-7.* Close valves 1 and 3 in the demineralizer room.	The electrical switch is located in the reactor bay, over the demineralizer pump.
2. Remove the spool pieces.	Remove the inlet and exit spool pieces.	The spool pieces are painted red for identification. The spool piece on the inlet line is located on the suction side of the pump. The spool piece on the exit line is in the demineralizer room. This step ensures that regenerant fluids cannot be inadvertently added to the reactor water system.
3. Backwash the resin to remove foreign matter and prepare the resin for a more efficient regeneration.	Open valves C-4, C-5, and C-6. Open valve 5. Slowly adjust backwash supply valve 2 until the backwash flow-rate is about 7 gpm. Continue the backwash for at least 10 min, then close all valves.	These valves are the process-water supply valves. Be careful not to wash any coarse-grain resin from the columns.

*Normally these valves are closed since this unit is in standby.

Example 6.2. (continued)

Objectives	Procedures	Remarks
4. Prepare the caustic regenerant.	Add 8 in. of water to the regenerant tank via valve 12. While stirring the water in the regenerant tank, slowly add 3.5 gal of 50% NaOH and continue stirring until the caustic is thoroughly mixed.	CAUTION: Remember that the caustic is a hazardous chemical if handled improperly. Wear rubber gloves, shoe covers, face shield, and a rubber apron while preparing the regenerant solution
5. Regenerate the anion resin.	Open valves 4 and 7. Adjust the regenerant flow-rate to 1.8 gpm by throttling with valve 11.	
	Open valve 6 and allow the regenerant to be drawn into the resin column at a rate of 0.5 in./min.	If the regenerant is not being drawn into the column or if the water backs up in the regenerant tank, increase the flow-rate by opening valve 11 until the regenerant is being drawn at a rate of 0.5 in./min.
	As soon as the regenerant is all drawn in, open valve 12, and add 3 in. of water to the regenerant tank.	If the regenerant is being drawn too fast, throttle it with valve 6.
6. Rinse with demineralized water.	Change from process water to demineralized water for the rinsing step by opening valve C-3 and closing valves C-4 and C-5 and all valves at the demineralizer.	

Example 6.2. (continued)

Objectives	Procedures	Remarks
6. (continued)	Move the right-hand switch of the "Quality Indicator" from its normal SERVICE position to the RINSE position.	
	Open valve 4. Adjust the rinse flow-rate to about 7 gpm by manipulating valve 1. Rinse the column for 50 min. The pH should then be between 8 and 8.5.	
7. Prepare the acid regenerant solution.	Add 10 in. of water to the regenerant tank via valve 12, then close the valve. While stirring the water, Carefully add 2 1/2 nine-pound bottles of sulphuric acid and continue stirring until thoroughly mixed. Close valve 7.	CAUTION: Remember that the acid is a dangerous chemical if handled improperly. Wear rubber gloves, shoe covers, face shield, and a rubber apron while preparing the regenerant solution.
8. Regenerate the cation resin.	Open valve 8. Using valve 11, regulate the flow-rate to 1.8 gpm as indicated on the rotometer.	If the regenerant is not being drawn into the column or if the water backs up in the tank, increase the flow-rate by opening valve 11 until 0.5 in./min is attained.
	Open valve 6 to allow the regenerant to be drawn into the column at a rate of 0.5 in./min.	

Example 6.2. (continued)

Objectives	Procedures	Remarks
8. (continued)	When the regenerant is 1/2 in. from the bottom of the tank, add 3 in. of water by opening valve 12.	If the regenerant addition rate is too great, regulate it with valve 6.
	Close Valve 12.	
	After the regenerant is all drawn in, close all valves.	
9. Rinse with demineralized water.	Open valve 4. Adjust the rinse flow-rate to about 7 gpm by manipulating valve 1.	
	Rinse until the pH is 3.8 to 4.	Normally this step requires about 2 h.
10. Mix the resins.	Change the switch on the "Quality Indicator" from the RINSE to the SERVICE position.	The "Quality Indicator" is located on the west wall of the pool area.
	Open valve 9 to allow water to drain from the column (for about 10 min or until the water at the drain stops flowing).	
	Close valve 4.	
	Open valve 5.	

Example 6.2. (continued)

Objectives	Procedures	Remarks
10. (continued)	Adjust valve 2 until the flow indicator shows a water-mixing rate of 5 gpm.	
	Open valve 10.	
	Adjust valve 13 until the air rate on the flow indicator shows an air-mixing flow-rate of 2.5 ft^3/min.	
	When water appears at the drain, close valves 13, 10, 5, and 2 (in the order listed).	
	Open valve 1 to allow the unit to refill with water.	
	When the water starts flowing steadily at the drain, close valve 9.	
	Open valve 4.	
	Rinse until the resistivity of the demineralizer effluent is greater than the resistivity of the pool primary water.	Normally, this step requires about 2 h.

Example 6.2. (continued)

	Objectives	Procedures	Remarks
11.	Place the unit in service.	Close valve 4 and replace the spool pieces. Close valves C-3 and C-6. Open valves B-1, B-2, and B-7. Open valves 1 and 3. Energize the pump.	NOTE: The flow-rate should be about 18 gpm.

6.1.11. Filtering beds - description and procedures

There are three filter beds servicing the primary water system. Two of the beds, located on the west side of the reactor bay, are referred to as the skimmer filters. The third bed, located in the pump house, is referred to as the primary filter bed.

1. Skimmer filter beds

   a. Description. The two skimmer filter beds are installed in series. The first, A Dollinger Staynew liquid filter, used W-12 wool-felt filters with bronze backup wire as a filter media. (The use of filters in this housing has been discontinued.) The second, a Ful-flow filter, uses 78 Cuno Micro-Klean filter cartridges as a filter media. The filters should be changed when the pressure drop is 20 psig through the unit.

   b. Procedure for replacing the Dollinger Staynew liquid and Ful-flow filter media

      (1) The skimmer pump should be de-energized and the filter columns isolated for two days before replacing the filters, to allow for decay of radioactive material in the filters. Isolate the filters by closing valves A-8 and A-13.

      (2) Open valves A-11 and A-12. This will release the pressure on both filters.

(3) Attach a hose to valve A-14 and run the free end of the hose to a process drain. Open valve A-14 to drain the filter columns.

(4) Remove Dollinger Staynew liquid filter access cover and remove the nut which secures the insert assembly. Install the lifting bar on top of the insert assembly and, using the crane, carefully lift the insert assembly from the tank. The insert assembly should be covered with a plastic bag as the assembly is being removed from the tank (to contain any contamination that may be present). The entire operation should be performed in a "contamination zone" and a Health Physics representative should be present during initial removal of the assembly. Remove the four tie rods from the upper and lower radial-pin insert assemblies and dispose of the filter media and gaskets. Wash the radial-pin inserts and install new filter media slip-on inserts and gaskets. To reassemble the unit, use the same procedure in reverse order.

5. Remove the Ful-flow filter access cover and dispose of the spent filter cartridges. As in the operation described above, this work will be performed in a contamination zone with a Health Physics representative present during the removal of the first cartridge.

Install 78 new Cuno Micro-Klean filter cartridges. To reassemble the unit, use the same procedure in reverse order.

2. Description of the primary filter bed

a. Description. The primary filter bed is a Purolator Products type PAGR-200V (modified). This unit is 18-in.-OD and 24 7/8-in. high. The bed uses eight 4-in.-OD and 12-in. high Micronic five-micron cartridges as the filter media. When the filters are clean, the pressure drop across the filter bed is 3 psi with a flow rate of 200 gpm.

b. Procedure for replacing the Purolator filter media. Close valves HCV-52 and HCV-53 to isolate the bed. Depressurize the bed by opening the vent valve on the top. (If it is necessary to to drain the bed, the pipe plug on the bottom must be removed.) Remove the top head and dispose of the spent filter cartridges. This work will be performed in a contamination zone with a Health Physics reprosentative present during the removal of the first cartridge.

6.1.12. Routine checks

In order to maintain proper surveillance over the various components throughout the reactor complex, the roving operator is to inspect the area and perform all the checks listed on the checklist for the particular shift. These checks are to be performed at the beginning of each shift; the area is

to be inspected again during the middle of each shift for proper operating conditions (see Section 12 for the specific items to be checked by each shift). The individual items related to the primary water system which are on the shift checklist are self-explanatory.

6.2. The Secondary-Water Cooling System

6.2.1. References

Drawings:

P 20310 EC 001, Cooling Water System - Flow Sheet

P 20310 EC 023, Plan of Secondary Underground Lines from Heat Exchanger to and from Cooling Tower

P 20310 EC 027, Pump Sump and Cooling Tower Piping - Plan

P 20310 EC 028, Pump Sump and Cooling Tower Piping - Section

P 20310 EC 031, Heat Exchanger Piping - Plan

P 20310 EC 032, Heat Exchanger Piping - Sections Sheet 1

P 20310 EC 033, Heat Exchanger Piping - Sections Sheet 2

S 20310 EA 014, Cooling Tower Basin - Plan, Sections, and Details

S 20310 PF 003, Cooling Tower Acid Storage Tank - Acid Storage Tank, Location, Plan and Sections, Safety Shower Pad, and Piping Details

P 20310 PF 004, Cooling Tower Acid Storage Tank - Piping Plan, Sections and Details

6.2.2. Introduction

The secondary water system consists basically of an induced-draft cooling tower, a pump, the tube side of a stainless steel heat exchanger, and the piping necessary to convey

the water. The secondary loop is equipped with an automatic temperature-control system. Auxiliary systems serve to treat the process water with various chemicals to prevent corrosion, scaling, and accumulation of microorganisms.

6.2.3. Description

Water, from the approximately 40,000-gal-capacity cooling-tower basin, is pumped through metal strainers, through the tube side of the stainless steel heat exchanger, through an automatically controlled valve, and through the cooling tower. The flow rate of the secondary water is varied by the action of the automatically controlled valve. Action of this valve and variation of the cooling tower fan speed are used to control and maintain the temperature of the primary water at 95°F (leaving the heat exchanger). The process water lost due to evaporation and due to tower blowdown is automatically replaced at the tower basin.

The rated capacity of the cooling tower is 5 MW. A portion of the 3-MW-excess capacity is used to provide cooling water for air-conditioning units Nos. 5, 6, and 7 in the laboratories and offices on the first and second floors east of the reactor bay. A separate pump (with a full-flow rating of 220 gpm) is used to provide secondary cooling water to these units. This pump necessarily operates all during the year since these air-conditioning units provide heating during the cooler months. It is sometimes desirable, during freezing weather, to bypass the tower when only the air-conditioning pump is operating. Water from the air-conditioning units is then routed through HCV-94 directly to the tower basin. Use

of this flow path prevents the accumulation of ice on the tower under such conditions. (NOTE: For detailed description of the cooling tower, see Section 6.3., "The Cooling Tower.")

6.2.4. General precautions

1. Be sure that the sump is filled and that automatic-water-supply valve LV-20 is operable and valve HCV-81 is opened before operating the system.
2. Maintain the chemical-concentration parameters within specified limits.
3. Follow the instructions in the section concerning hazards involved in handling the chemicals used for treating the secondary water.
4. Avoid permitting excessive accumulation of ice on the tower during the winter months.
5. If there is any doubt concerning the condition of the secondary system or related equipment, the reactor supervisor or his designated alternate should be consulted prior to continuing or beginning operation.

6.2.5. Operational procedures

Normally, when Mode-2 operation is selected, the duration of operation at significant power levels will require placing the secondary cooling system in service. The procedure for accomplishing this is as follows:

1. Ensure that the system is filled, vented, and ready for service.
2. Place the fans in AUTOMATIC; the controls are located on the west wall of the pump house. Select the fans to operated; normally, both fans will be selected.

3. Observe the temperature increase indicated by the recorder readout in the control room.
4. When the temperature of the primary water leaving the heat exchanger reaches about 105°F, place the control-selector lever of the recorder-controller in MANUAL (see Fig. 6.6).
5. Move the demand setpoint to request 13 to 14 psi of air pressure on the secondary throttle valve; this will cause the control valve to be partially open. (The black-colored air-pressure indicator should move to align itself with the demand knob.)
6. When the valve is about 80% closed (black indicator at about 13 or 14 psi), energize the secondary pump motor using the panel control knob. This action should minimize surges in the water flow. The panel pump-motor indicator light should be ON and the secondary flow recorder should indicate flow.
7. Continue to adjust the demand setpoint knob until the temperature stabilizes at approximately 95°F.
8. Place the control-selector lever in SEAL. This fixes the air pressure at the valve operator at the previously demanded pressure.
9. Place the control-selector lever in AUTOMATIC. (NOTE: Due to the time delays in the instrumentation associated with the temperature-control system, it is not particularly desirable to place the control-selector lever in AUTOMATIC and energize the pump indiscriminately. The result, in all probability, could be

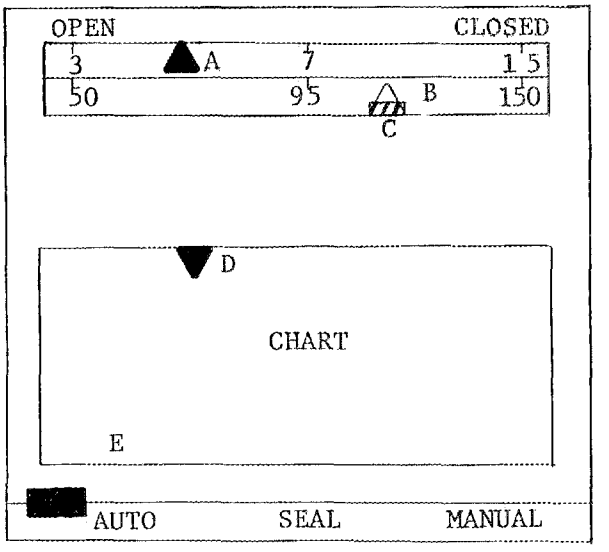

Fig. 6.6. Reactor inlet water temperature controller.

A - This black pointer indicates the output air pressure of the pneumatic transmitter. As the air pressure increases, the secondary valve closes.

B - The "demand-setpoint" pointer indicates the preferred temperature of the water returning to the pool when the control-selector lever is in the AUTO position and indicates the desired valve-operator pressure when the control selector lever is in the MANUAL position.

C - The demand-setpoint knob is used to set the demand-setpoint pointer.

D - This pointer indicates the actual temperature of the water leaving the primary side of the heat exchanger.

E - Control-selector lever.

excessive oscillations in temperature and surges in the water flow. The above procedure is intended to minimize these effects.)

The secondary flow rate will increase and decrease to compensate for any increases or decreases of tower basin temperature; this is necessary to continue removing heat from the heat exchanger at a constant rate.

The secondary flow rate is the parameter which is used to control operation of the cooling tower fans. The sequence of operation of this system is indicated in Table 6.1.

Table 6.1. Fan speed control

Switch*	Change of Flow rate	Fan speed
FS-11F	Increase to 1200 gpm	South in low
FS-11D	Increase to 1250 gpm	North in low
FS-11E	Increase to 1390 gpm	South in high
FS-11C	Increase to 1410 gpm	North in high
FS-11C	Decrease to 1250 gpm	North in low
FS-11E	Decrease to 1200 gpm	South in low
FS-11D	Decrease to 1040 gpm	North, off
FS-11F	Decrease to 1000 gpm	South, off

*These are differential-type pressure switches with an adjustable low-pressure setpoint and with an adjustable span used to determine the high-pressure setpoint.

The rate of flow of the secondary water to the cooling tower is monitored just downstream from the heat exchanger by FE-11, which is a 1/8-in.-thick orifice plate with a 6.3343-in.-diam bore. The secondary-flow transmitter, FT-11, transmits a pneumatic signal to flow-indicator FI-11 at the pump house and to FR-11, TR-15 (a two-pen recorder) located in the control room. An associated pressure switch, FS-11A, will sound an annunciator if the flow decreases to <300 gpm. The flow rate is controlled by the position of the throttle valve, TCV-13; the position of this valve is adjusted by the pool-inlet-temperature controller (TC-13).

6.2.6. Chemical conditioning of the tower water

1. Objectives. To help maintain an efficient secondary cooling system, it is necessary to treat the process water used in the system with various chemicals. The main objectives of the treatment are as follows:
   a. to control scale formation and corrosion,
   b. to control microbiological growth, and
   c. to control the pH of the secondary water.

The reasons for attempting to control scale formation and corrosion are rather obvious. Both cause a loss of heat-transfer capability; scaling can seriously affect flow rates, and corrosion, if unchecked, will eventually result in a leaky, possibly unsafe and unusable system.

The reasons for attempting to control microbiological growths are to minimize heat-transfer losses and deterioration of the wood. The wetted wooden portions of the cooling tower are redwood, which resists deterioration; however, it is still subject to attack by chemical agents and fungi.

Chemical attack on tower lumber is a form of deterioration in which oxidizing agents, such as chlorine and alkalies, attack lignin and remove materials, naturally present, which are toxic to wood-destroying organisms; this can cause very serious damage. Chemical treatment is designed to minimize this deterioration although it cannot be eliminated completely.

Evidence of chemical attack (delignification) can probably be found during the earliest stages of development in the most heavily wetted and washed portions of the tower wood.

Fungus attack may be described as the decomposition of wood by microorganisms. These microorganisms utilize wood as food. They are ever present in decaying wood in the forest, and their spores are easily blown by the wind into the cooling tower.

Fungus attack can be classed as white rot, brown rot, and soft rot. White rot decomposes all components of the wood lignin and cellulose. Look for a spongy, stringy condition of the wood and pockets of white or yellow fibrous material. Brown rot decomposes the cellulose, leaving the lignin more or less unaffected. The wood is reduced to a brown mass which powders easily in the fingers. Both white and brown rots usually leave the surface intact and it is necessary to probe beneath the surface of the wood to detect their presence. These fungi are usually found in the nonflooded zones of the tower.

Soft rot usually takes place in the flooded zones. Attack starts on the surface and progresses inward. It is identified by loosening of surface fibers, eroded surface, and

loss of strength. Surface checks across the grain are frequently visible after the wood has dried.

Routine inspection of the tower components should reveal any soft rot, for, as noted above, external evidence occurs. In the case of white rot and brown rot; however, inspection procedures described below are necessary for detection.

Samples of fill and drift eliminator both should be broken and the interior examined for a darkening in color. The manner in which the wood breaks should be noted - infected woods tend to break straight across the grain with little or no splintering.

Although damage to wooden components by microorganisms is fairly obvious, damage to metal components is not; however, certain organisms of the sulfate-reducing type generate corrosive hydrogen sulfide which causes severe pitting attack. In addition, slime can accelerate corrosion by depositing on metal surfaces and preventing protective film formation. Biological fouling on metal surfaces will also create differential oxygen concentration cells and result in serious pitting of the surface. Other sources of difficulty are the iron-depositing categories of bacteria. Those bacteria have the capacity to absorb and to accumulate iron and/or manganese when they are present in environments which contain these elements. Later, these organisms deposit iron and manganese salts around their cells.

An attempt is made to control the pH of the secondary water in order to protect the metal portion of the system. The solids in the process water fed to the basin are concentrated because of the high evaporation rate. This tends to

raise the pH primarily due to the increased concentration of calcium carbonate ($CaCO_2$). A high pH is deleterious to the wood in the tower, so sulphuric acid is fed into the water to maintain the acidity at a level at which the chemicals used to control the corrosion and biological growth are most effective. However, this acid addition must be very carefully controlled since an excessive amount of acid would be very harmful to the metallic components of the system.

2. Treatment of scale formation and corrosion. A phosphate solution is used to maintain a protective film on metal components to inhibit scale formation, corrosion, and fouling of the components in the secondary system (refer to Section 6.2.7 for handling procedures). The addition necessary to maintain the desired concentration will be made by a pump, pumping from a 55-gal drum to the basin.

   a. After the tower basin is filled following routine basin cleaning, add 4 gal of the phosphate solution which should place the concentration at approximately 100 ppm. Circulate the basin water, using the pool secondary pump, for 24 h, maintaining the concentration of 100 ppm. NOTE: The basin is usually cleaned in the spring and fall when the outside temperature is above freezing. If the reactor is not operating, the pool primary pump should be shut down (see Section 6.1.5, item 2, "To Stop Flow in the Primary System") during the secondary water circulation to prevent lowering the pool water temperature.

b. Analyze for phosphate content twice a shift when the secondary is in operation, and make required adjustments to the pump to maintain the desired phosphate level.

3. Treatment for microbiological growth. The control of microbiological growth is accomplished by periodic addition of a biocide which will minimize the deterioration of the redwood in the cooling tower. The periodic addition of the biocide is accomplished as follows:

   a. After the tower basin is filled following routine basin cleaning, add 4.5 gal of liquid biocide to the basin and observe the secondary flow (instructions are given in Section 6.2.6, item 2b). Keep the blowdown valve closed for at least 4-5 h.

   b. Repeat the treatment each week.

4. Total-solids control. A total-solids concentration of several times that of the system makeup water is selected as an optimum for the system depending upon the total treatment program. Normally, this will result in an operating range of 900-1000 micromhos, as determined by use of the Nalcometer. The exact control point, however, will be determined by measuring the total-solids content of the makeup water (this number should then be multiplied by the selected concentration factor obtained from operating instructions). The procedure for controlling total-solids content is as follows:

a. Sample the system water and determine the total-solids content.

b. If the total solids is >1000 micromhos, start the blowdown flow. If the total solids is <900 micromhos, stop the blowdown flow. NOTE: Establish the blowdown as follows: close HCV-80b (sample line), open HCV-80a, and open HCV-80 enough to obtain the desired blowdown flow. During freezing temperatures when the blowdown is not in service, valve HCV-80 should be closed and HCV-80a and HCV-80b should be open, thereby freeing trapped water in the line that would otherwise freeze and possibly burst the pipe.

c. When the secondary is operating, the total-solids content of the tower water will be determined at least once per shift and the blowdown rate adjusted accordingly.

5. pH control. The pH probe, ApHE-14, is located in the BSR pumphouse. Water is supplied to the probe from valve HCV-89 and HCV-P1 (refer to Fig. 6.7 "BSR Secondary pH Control Probes"); after passing over the probe, the water goes to the storm drain. The probe transmits an electrical signal to the pH amplifier-indicator (ApHT), which in turn transmits an electrical signal to the recorder-controller (ApH R-14, ApH C-14) in the control room. The controller transmits a variable current signal to the motor controller, ApH CO-14, located at the pump house. The motor

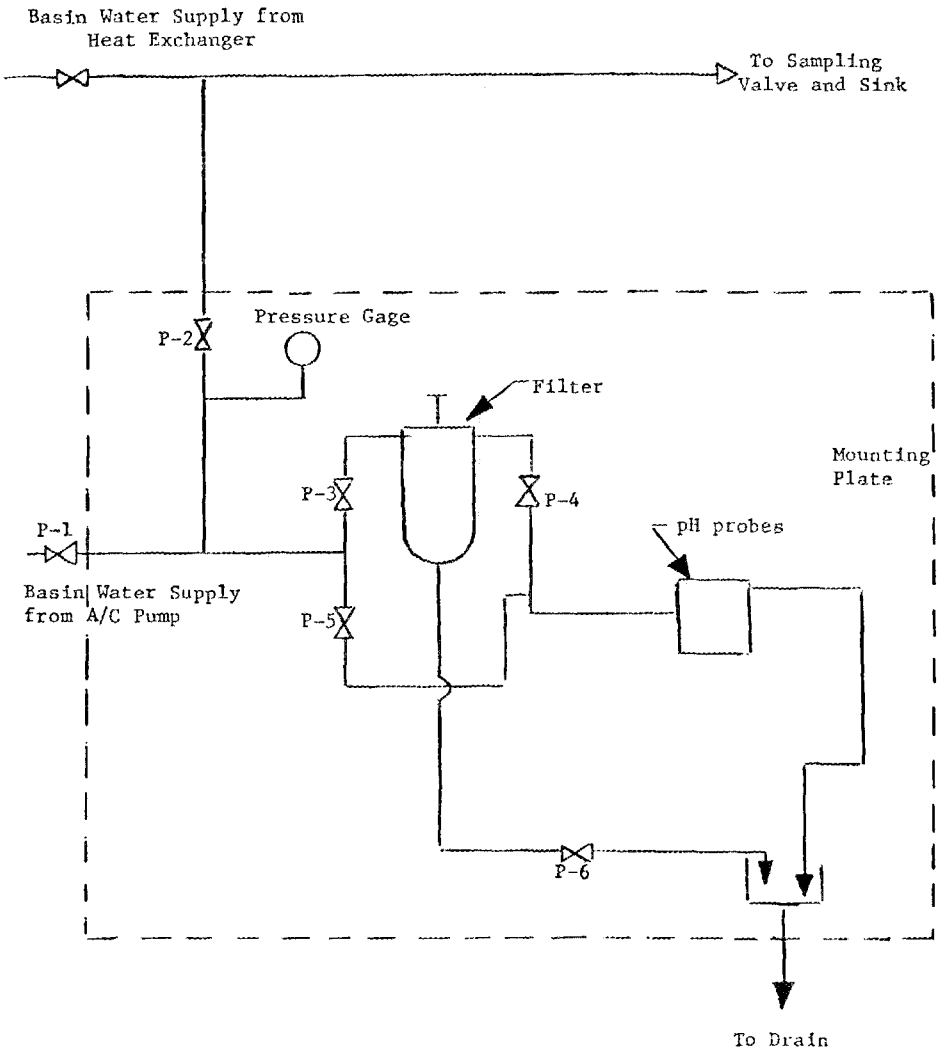

Fig. 6.7. BSR secondary pH control probes.

controller transmits a proportional dc-voltage signal to the motor of the minipump which feeds sulphuric acid from the storage tank to the cooling tower basin (refer to Section 11.6, "BSR Acid Storage Tank"). An adjustable alarm contact on the recorder, ApH R-14, will sound an annunciator if the pH increases to ≥ 7.5 or decreases to ≤ 7.0.

6. pH probes. The proper operation of the pH probes depends on the flow of water supplied to the probes (see Fig. 6.7). The flow is established by the following method.
   a. Open valves HCV-89, P-1, P-2, P-3, and P-4.
   b. Adjust valve P-4 to obtain desired water flow to the probes.
   c. Valves P-5 and P-6 closed.
   d. The filter can be bypassed by opening P-5.
   e. Once per week (see Example 12.4, "BSR Routine Check Sheet 8-4 Shift" in this manual), flush the filter unit as follows:
      (1) Open valve P-6 and rotate the filter one complete turn. After the filter housing has been flushed, close P-6.
7. Procedures for operating chemical testing instruments
   a. Portable pH Meter (see Section 11.3 in this manual). Determination of the pH is made on a number of water samples. In all cases, reasonable precautions should be taken to get a representative sample; i.e., clean sample containers should

be used and they should be rinsed with the sample. The sample lines should be thoroughly purged and an adequate sample should be obtained. After the measurements are completed, rinse the electrodes with process water and leave them immersed in the process water.

WARNING: Never leave the electrodes immersed in phosphate solution.

b. Phosphate Analysis. The secondary water systems are treated with a phosphate solution to retard corrosion. The water must be analyzed for its phosphate content so that the proper level can be maintained. A Phosphate Test Kit is used for this analysis, and the proper procedure is as follows:

(1) Fill sample tube to the 25 ml scribe mark with water to be tested.

(2) Add 25 drops of sodium thiosulfate and swirl to mix. The solution should now be a violet color.

(3) Add one dipper xylenol orange indicator and swirl to mix. The solution should now be a violet color.

(4) Add one drop hydrochloric acid and swirl to mix. Check pH using phydrion paper. Continue dropwise addition of hydrochloric acid and pH check until the proper pH (2.0-3.0) is reached. The proper pH adjustment at this

point is essential. After proper pH is obtained, the solution should be a yellow color. See note 2 for proper use of pH paper.

(5) Add 10 drops of Interference Suppressor. Mix. Avoid contact with skin or eyes.

(6) Add thorium nitrate dropwise, mixing constantly. Count the number of drops needed to change the color from yellow to the first permanent violet color which persists for 30 s. Always hold the dropper bottle in a vertical position. If held at another angle, the drop size may vary.

(7) Repeat the procedure on a sample of makeup water without treatment to determine the blank.

   (a) If a titration is in excess of 15 drops, the sample must be diluted to get a titration value of less than 15 drops.

Results

(A-B) x F = Dearborn treatment

A = Drops thorium nitrate used in sample

B = Drops thorium nitrate used in blank

F = Factor - The Dearborn representative will furnish this value.

FACTOR 18

Notes

1. Chlorine causes the indicator to fade, but unless extremely high residuals are present, the thiosulfate addition will eliminate this problem. Most ions normally present in industrial water do not interfere at the pH at which the test is performed. Ferric iron above 5 ppm and phosphate interfere. The use of a blank allows for evaluation of interferences.
2. Tear off a 4-in. strip of pH paper. Dip only the tip of the strip into the sample and compare to the color chart. Tear off the spent tip of the paper and use a fresh end for each comparison. Do not drop paper into sample. The paper is not instantaneously reversible. More important, the dye will leak out and contribute troublesome color background during the chelation end point. The optimum pH for the chelation titration is 2.5.

Apparatus and Reagents

1 - Sample tube . . . . . Code 1972
1 - Sodium Thiosulfate, 0.1 m, 2-oz dropper bottle . Code 550
1 - pHydrion paper pH 0.0-11.0, Dual Pack,
with dispenser . . . . . Code 582
1 - Xylenol Orange Indicator, vial with scoop . . . Code 562
1 - Thorium Nitrate, 0.002 M, 2-oz. dropper bottle . Code 900
1 - Hydrochloric Acid, 1 M, 2-oz. dropper bottle . . Code 595
1 - Interface Suppressor, 2-oz. dropper bottle . . . Code 899

c. Total-solids analysis with a nalcometer. For the proper operation of the cooling tower system, it is necessary to control the total solids dissolved in the secondary water. The total-solids analysis is routinely performed with the nalcometer as follows:

(1) Fill the nalcometer with basin water.

(2) Turn the selector switch to the proper range and push the power button inward; record the reading. (NOTE: The full scale reading on the meter is 5. The selector switch positions are 10, 100, and 1000. The pointer reading is multiplied by the selector switch position to obtain the total-solids content in ppm.)

(3) When completed, pour the tested basin water from the cup of the nalcometer, rinse the cup with process water, and leave empty.

6.2.7. Chemical hazards

As described in this section, a biocide, a phosphate solution, and sulfuric acid are presently used to treat the secondary water system for various reasons. These chemicals are potentially hazardous and must be handled properly. Brief descriptions of the purpose, the toxicology, and the disaster hazard for each chemical along with recommended safe operating practices, are given below.

1. Biocide

a. Purpose. The use of a biocide in the treatment of cooling tower water controls slime and microbiological activity and actually kills microorganisms. It also has nonoxidizing characteristics

for the prevention of wood rot in the cooling towers. One biocide, Micro 321, is a liquid preparation which contains the following active ingredients:

(1) Alkyl Dimethyl Benzyl Ammonium Chloride - 12.5%

(2) Bis (Tri-n-Butyltin oxide) - 2.25%

(3) Inert ingredients - 85.25%

b. Harmful effects. Causes eye damage and skin irritation. May be absorbed through the skin. Harmful or fatal if swallowed.

c. First Aid. In case of skin contact, wash with plenty of soap and water. For eyes, flush with water for 15 min and get prompt medical attention. If swallowed drink promptly a large quantity of milk, egg whites, gelatin solution, or if these are not available, drink large quantities of water. Avoid alcohol. Get medical attention immediately.

2. Phosphate

a. Purpose. This blend of organic sequestrants and anti-foulants is used to control mineral and organic fouling. It contains corrosion inhibitors which provide protection to all system metals. One phosphate, ENDCOR 4630, contains the following ingredients:

(1) HEDP - Hydroxyethylidene diphosphonic acid

(2) EDTMPA - Ethylenediaminetetramethylene diphosphonic acid

(3) PMA - Polymethacrylate

(4) MBT - Mercaptobenzothiazole

(5) Na_3PO_4 - Trisodium phosphate

b. Warning. Alkaline solution not to be taken internally. Use gloves and protective clothing when handling. If solution gets on skin, wash with plenty of water. If eyes are affected, flush with water and get medical attention.

3. Sulfuric acid

a. Purpose. The solids in the process water fed to the basin are being concentrated because of the high evaporation rate. This tends to raise the pH, primarily due to the increased concentration of calcium carbonate. A high pH is undesirable for two reasons: (1) it is deleterious to the wood in the tower, and (2) it is not conducive to good control of corrosion and biological growth. The pH of the water, therefore, is controlled in the range of 7.0 to 7.5 by the addition of sulfuric acid.

b. Toxicology. In concentrated form, sulfuric acid acts as a powerful caustic to the skin, destroying the epidermis and penetrating to the underlying tissue. This causes great pain, and, if much of the skin is involved, it is accompanied by shock, collapse, and symptoms similar to those seen in severe burns. The fumes cause coughing and irritation of the mucuous membranes of the eyes and upper respiratory tract.

c. Disaster hazard. Dangerous; when heated it emits highly toxic fumes.

d. Countermeasures. In all cases of contact in any form, immediately give prolonged applications of running water to wash the material from the body. If the eyes are involved, they should be irrigated immediately with copious quantities of water for at least 15 min. If swallowed, do not induce vomiting. If the patient is conscious, have him wash out his mouth with water and drink as much water as possible (milk is preferable but not as readily available).

4. Safe operation practices

a. Transporting. When loading, transporting, or unloading toxic or corrosive materials, handle the containers carefully to avoid possible damage and subsequent leakage. Protective clothing should also be worn. If a leaking container is discovered, report it immediately to the shift supervisor. Normally, flushing the spilled chemical with water will be the corrective action.

b. Storage. The metal drums containing the biocide, Micro 321, should be stored where the temperature is above 24°F(-4°C). The phosphate, ENDCOR 4630, should be stored where the temperature is above 2°F.

5. Routine handling

a. Whenever it is necessary to handle acid at the pool secondary tower, or to transfer acid from the truck to the storage tank at the secondary tower, protective equipment must be used. This

includes wearing rubber gloves, a rubber apron, and a face shield. The same protective equipment must also be used in handling the Micro 321 at the tower.

b. Whenever it is necessary to handle ENDCOR 4630 at the tower, the following protective equipment must be used: gloves, rubber apron, and face shield.

c. Whenever these chemicals come in contact with the skin, wash the affected areas immediately. Showers are available at both towers. If the eyes are involved, wash immediately with the water hoses available at each tower for at least 15 min. If assistance is required, communication is readily available, and at least two individuals on each shift have completed a course in first aid training. All injuries are to be reported to Medical as soon as possible (4-7431).

d. Personal hygiene is also of primary importance; after handling these chemicals, one should always wash his hands before eating, smoking, or drinking. Reiterating, these chemicals are not dangerous when handled properly. As with most anything, they are hazardous when elementary safety practices are ignored.

6.2.8. Filling and draining the tower basin and secondary system

1. Filling the tower basin and secondary system. To fill the tower with process water, open valve HCV-66 located on the west side of the tower; ensure that

HCV-81 is open. Use the long T-handle tool provided. After the basin is filled, close valve HCV-66. Normal makeup water is supplied automatically through valve LV-20, provided that HCV-81 is open. (NOTE: Be sure that drain valves HCV-79 and HCV-80 are closed before filling the system.)

To fill the secondary system piping and heat-exchanger tubes, energize the secondary pump motor and open valve TCV-13. (NOTE: TCV-13 is operated from the control room.) The secondary system will vent through the cooling tower whenever secondary flow is established.

2. Draining the tower basin and secondary system. To drain the sump, open valve HCV-79 after ensuring that HCV-66 and HCV-81 are closed. Also ensure that TCV-13 is closed. (NOTE: TCV-13 is operated from the control room.)

To drain the secondary system piping and heat-exchanger tubes, connect a hose from the discharge side of HCV-89 to the floor drain. Ensure that the secondary pump motor is de-energized and tagged. Close TCV-13 and open HCV-89. (HCV-89 is a 1 1/2-in. gate valve connected to the inlet line on the secondary side of the heat exchanger.) Open vent valve HCV-90 or HCV-91.

6.2.9. De-icing the cooling towers

During freezing weather, ice may accumulate on the tower fill and on the distribution pans to the extent that the structure may be unable to support the weight. To ensure that break-

age does not occur, there should be frequent checks of the area when the temperature drops below freezing, and the tower should be de-iced as often as necessary.

To de-ice the tower, operate the fans in REVERSE. The procedure is as follows:

1. Turn the fan mode switches to MANUAL. (The two mode switches are mounted in the aluminum box located on the west wall of the pump house; normally, both switches would be in the AUTOMATIC position.)
2. Depress both "off" buttons for the cooling tower fans; these buttons are located in the panel west of the cooling tower.
3. After the fans have stopped, turn both of the "forward-reverse" switches to the REVERSE position. (NOTE: These switches are located in the panel west of the cooling tower. There is a 3-min delay before the fans will start in the reverse mode.)
4. After the ice has melted, depress the "stop" button; these buttons are located in the panel west of the cooling tower.
5. After the fans have stopped, turn the "forward-reverse" switches to the FORWARD position.
6. Place the switches mentioned in item 1 in the AUTOMATIC position.

   NOTE: The fans should not be left in the REVERSE mode mode for extended periods of time due to potential damage that could occur to the coupling components. Normally the tower can be de-iced in 1 to 2 h with both fans in the REVERSE mode. In extremely cold weather, de-icing is required about once every 24 h.

6.2.10. Routine checks

In order to maintain proper surveillance over the various components throughout the reactor complex, the roving operator is to inspect the area and perform all checks listed on the checklist for that particular shift; the area is to be inspected again during the middle of the shift for proper operating conditions (see Section 12 for the specific items to be checked by each shift). The individual items related to the primary water systems are self-explanatory.

6.3. The Cooling Tower

6.3.1. Description of tower components

To aid in the proper inspection of the cooling tower, the various components, their purposes, and the method of operation will be briefly discussed. These items should be familiar to everyone inspecting the secondary system.

Before discussing each component, the relationship of the components to each other should be established. For each fan, power is supplied by the motor to the Flexidyne coupling which is, in turn, connected to the jack shaft. The jack shaft drives the speed reducer via the drive shaft. The fan hub assembly (to which the fan blades are connected) is turned by the speed reducer.

1. Speed Reducer. The speed reducer is the heart of the tower. It receives power from the high-speed motor, reduces the speed, and increases the torque to drive the fan blades. It is subject to extreme service wear and warrants careful attention and maintenance.

The power-input shaft is held in place within the pinion cage by a set of roller bearings. The output shaft, or fan shaft, is perpendicular to the input shaft and is also held in place by roller bearings. Spiral bevel gears within the reducer change the direction and reduce the speed of rotation.

Wear develops first in the shaft bearings, both pinion and axle, resulting in loose shafts. Wear can also develop between the gears, resulting in excessive backlash.

As a preliminary check on the condition of the speed reducer:

a. Try to move the pinion shaft up and down or sideways (movement indicates pinion-bearing wear).
b. Try to move a fan blade up and down (excessive movement indicates fan-shaft-bearing wear).
c. Hold the fan still and rock the drive shaft back and forth (a check for indicating backlash).

If excessive movement is noted at any point, have the drive shaft disconnected and see if the pinion shaft can be moved in and out of the pinion cage. The pinion shaft bearings are set to slightly preload the roller bearings; therefore, any movement of the pinion shaft indicates wear of the roller bearings. If movement is detected, the bearings should be removed for inspection and replaced if damaged or severely worn.

The bearings on the fan shaft can be checked for wear by moving a fan blade up and down and observing the movement of the fan shaft with reference to the top of the speed-reducer casting. Relative movement of this shaft should be slight. Any excessive movement indicates that the speed reducer should be opened and the shaft bearings inspected.

Excessive gear wear can be determined by the degree of backlash or movement of one of the shafts with the other shaft locked. Too much backlash indicates wear of the gear teeth and bearings. These should be inspected and replaced if necessary.

The speed reducer must operate as a unit. Excessive wear or vibration at any one point may impose loads on other parts which lead to their failure. Therefore, the entire unit should be inspected frequently and kept well adjusted.

Due to the severe atmospheric conditions encountered at the top of a cooling tower, it is easy for moisture to contaminate the gear-reducer lubricant. Any time this oil becomes contaminated it must be drained, the case flushed out, and the lubricant properly replaced. Two types of contamination may be present - sludge and water condensation.

To check for condensation, heat a metal plate to between 300 and 350°F and place a few drops of gear-reducer oil on it. If the oil boils and foams, it indicates the presence of water. If it merely spreads out and smokes, there is no water present.

If either sludge or moisture are found in the lubricant, it must be drained, the case must be flushed out with flushing oil, and the case refilled with clean oil.

2. Drive shafts. The drive shaft connects the jack shaft to the speed reducer in the center of the fan cylinder. At the ends of the drive shaft four bonded rubber bushings are used to provide a flexible connection to the jack shaft and to the gear reducer. However, the drive shaft is still the major source of vibration in the mechanical equipment. Excessive vibration, whether detected during routine daily checks or during special inspections, is cause for shutting the fan down to permit checks of the alignment and balance of the drive shaft.

   Inspection of the complete drive shaft should be made every six months. Look for checking or cracking of rubber bushings, looseness of bolts, and misalignment of any parts in the flexible shafts.

   In the event that the drive-shaft guards are removed for maintenance, they must be reinstalled before the tower is put back into service. Failure of the drive shaft, unprotected by the drive-shaft guards, can result in excessive damage to the fan and speed reducer.

3. Flexidyne coupling. The Flexidyne coupling is basically a fluid-drive-type device in which metal shot is used as the "flow charge." (At the BSR, stainless steel shot is used.) When the motor is not energized

and the coupling is not rotating, the shot rests in the bottom half of the doughnut-shaped hole (toroid) formed by the drive housing and the housing cover. When the motor is energized, the motor end of the coupling rotates but the driven end does not. Rotation of the motor end distributes the shot outward around the inner surface of the toroid. (This distribution is caused by centrifugal force and by the agitator action of the rotor.) As the shot begins to build up on this surface, the rotor of the driven end, which is also located in the toroid, begins to be more firmly "locked" to the inner surface of the drive housing and of the housing cover due to friction. When all of the shots are redistributed, the driven end is soldily coupled to the motor end. The Flexidyne coupling thus reduces significantly the starting torque on the motor.

4. Fan motor. The fan motor is a 440-V, 3-phase, 60-Hz induction motor. The power output is 7.5 hp for low-speed fan operation and is 30 hp for high-speed fan operation.
5. Fan assembly. The fan assembly consists of an aluminum hub turned by the fan shaft, with the nine blades attached in radial sockets. (The diameter of the assembly is 144 in.) Normally, the fan does not require much maintenance, but any unusual noise or vibration is cause for shutting the unit down for inspection. The entire assembly should be checked

carefully every two months to determine that all parts are in good condition and that all assembly bolts are tight. The blades should also be inspected for cracks at the blade attachment and at points where fatigue might be concentrated.

The cooling tower fans were factory balanced. If it is necessary to replace or repair any part of the fan assembly, the balance must be checked when the fan is first put back into operation. An unbalanced fan assembly will result in vibration and abnormal loads being imposed on the other units of the fan drive.

6. Tower hardware. All metal parts in the cooling tower are subject to severe corrosive conditions. Special attention should be given to surface protection. Structural bolts must be kept tight and in good condition. In the event of failure through corrosion or other causes, bolts, nuts, and other hardware must be replaced as required.

6.3.2. Preventive maintenance

The cooling tower and secondary circulation system were designed to operate continuously, 24 h a day. However, dependable operation demands that there be a systematic schedule of inspection, lubrication, maintenance, and ultimate replacement of all the components. To facilitate this systematic check, an inspection form is completed every two months during the regular end-of-cycle shutdown. (This inspection form is Example 6.3.)

COOLING TOWER INSPECTION

OWNER	DATE INSPECTED
PLANT	INSPECTED BY
LOCATION	TOWER MANUFACTURER
INSTALLED 19 / MODEL NO.	WATER TREATMENT USED

CONDITION: 1-GOOD; 2-REPAIR; 3-REPLACE	1	2	3	CONDITION: 1-GOOD; 2-REPAIR; 3-REPLACE	1	2	3
END WALL CASING				WATER DISTRIBUTION			
LOUVERS				UNIFORM			
STAIRWAY				NOT UNIFORM			
HANDRAILS				STRUCTURAL MEMBERS			
WALKWAYS				COLLECTING BASIN			
DISTRIBUTION SYSTEM				CONCRETE			
STEEL PIPE				SUMP			
CAST-IRON PIPE				SCREENS			
FLOW VALVE				OVERFLOW			
DISTRIBUTION BASIN				FAN			
NEEDS CLEANING				BLADES			
FAN DECK FLOOR				TIP CLEARANCE			
FAN DECK FLOOR SUPPORTS				BLADE PITCH			
FAN CYLINDERS				VIBRATION / NO VIBRATION			
WOOD				GEAREDUCER			
STEEL				QUIET / NOISY			
FAN BEAMS AND CONNECTING FRAMING				OIL LEVEL			
MOTOR AND GEAREDUCER MOUNTS				OIL VENT			
DOORS				BACK LASH			
PARTITIONS				PINION SHAFT PLAY			
ELIMINATORS				FAN SHAFT END PLAY			
FILL				DRIVE SHAFT			
				MOTOR			
				BLOWDOWN LINES			

GENERAL COMMENTS AND REPAIR

UCN-5595
(3 3-64)

Example 6.3.

1. Routine checks. The following checks should be made at the indicated frequency.
   a. Check once each shift when the tower is in operation for:
      (1) unusual noise or vibration of the mechanical equipment,
      (2) indication of the motor overheating or bearing trouble,
      (3) proper water level in the tower basin,
      (4) proper water distribution and break-up in the tower-fill area,
      (5) operation of the circulating pumps,
      (6) suction screens, for clogging, and
      (7) indication of oil leakage from the motors, pumps, and gear reducers.
   b. Every two months, inspect the tower with special emphasis on the following checks. (WARNING: Be sure that the main switch is locked out before entering the fan cylinder.)
      (1) Check the speed-reducer lubricant for evidence of sludge or condensation.
      (2) Check the drive-shaft alignment-and-coupling condition.
      (3) Check the condition of the fan blades and hub. Be sure the attaching bolts and cap screws are in good condition.
      (4) Check and tighten, as required, the bolts holding the mechanical equipment and the tower framing.

(5) Clean the water-distribution system as required.

c. Every six months:

(1) Drain, flush, and refill the speed reducer with oil.

(2) Check the condition of the tower structural members, end-wall casing, louvers, stairway, distribution system, and fill and drift eliminators. Replace or repair any damaged members. Tighten the structural-member bolting if necessary. Test the structural wood for indication of a fungus attack by probing or testing with a hammer for soft spots. Infected members should be replaced.

(3) Inspect the condition of the Flexidyne-coupling shot.

(4) Check the axial and the radial alignment of all drive-train components.

7. WASTE DISPOSAL SYSTEM

7.1. Liquid-Waste Disposal

7.1.1. References

Drawings:

P 20310 EA 011 D, Sanitary Sewer Relocation Plan, Profile, and Detail

P 20310 EA 010 D, ILW* and Process Waste Lines Plan, Profiles, and Details

P 20310 EC 034 D, Heat Exchanger Building Hot and Process Drains and Heating Piping Plan, Sections and Details

P 20310 EC 031 D, Rev. 2, Heat-Exchanger Piping Plan

7.1.2. Introduction

All of the liquid waste from the BSR is, after suitable treatment and/or decontamination when needed, eventually discharged to the Clinch River via one of the small streams flowing through the ORNL area. Laboratory procedures, described in detail elsewhere[1], ensure that the concentration of radioactive material in the river remains well below the maximum permissible level.

---

*Intermediate-level waste.

[1] J. F. Manneschmidt and E. J. Witkowski, The Disposal of Radioactive Liquid and Gaseous Waste at ORNL, ORNL-TM-282 (August 17, 1962).

7.1.3. Description

Aqueous wastes may be divided into four categories accord- to the type of treatment given the waste:

1. Storm sewage. This is untreated nonradioactive waste collected from storm and roof drains or from drains in the areas not subject to contamination. This waste is discharged directly to White Oak Creek.
2. Sanitary sewage. This includes waste from showers, sinks, and toilet facilities. It is processed by the ORNL sewage treatment plant, the effluent of which is discharged to White Oak Creek.
3. Process waste. This originates from various processes which normally produce nonradioactive or only slightly radioactive waste. This disposal system for this type of waste water is designed to handle an activity concentration of <10 μc/gal (approximately 5600 dis min^{-1} ml^{-1}). The waste is treated in the ORNL radioactive-waste-disposal system and released to White Oak Creek. (Figure 7.1 is a flow diagram of that portion of the waste system that serves the BSR and reactor area.)
4. Intermediate-level waste (ILW). This originates as demineralizer regeneration fluids and other deliberate discharges of radioactive liquids. In general, it includes discharges which have, or are likely to have, activity concentrations in excess of 10 μc/gal. This waste is concentrated by a factor of approximately 25 in the ORNL waste evaporator before being disposed of by hydrofracture methods or storage. (Figure 7.1 is a flow diagram of that portion of the ILW system that serves the BSR and reactor area.)

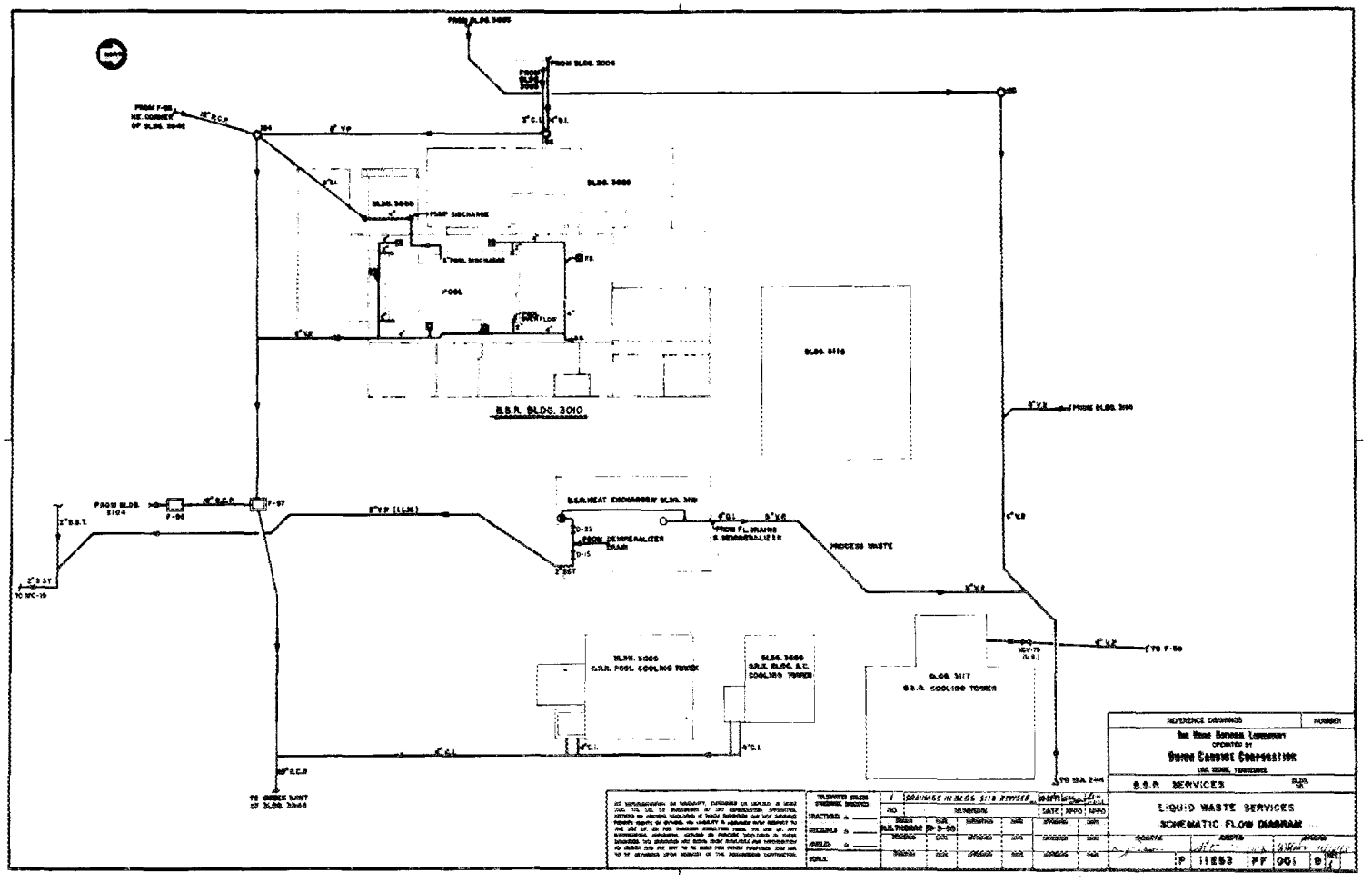

Fig. 7.1. Liquid waste services.

7.1.4. Operational procedures

In general, the reactor operating crew should be familiar with the purpose of each liquid waste system and know to which system the wastes from the various processes should be routed. Specific valving procedures and sampling techniques relative to liquid waste disposal are detailed elsewhere in these procedures and need not be repeated here. Rather, the following general procedure for handling wastes is offered.

1. The radioactivity level and type of contaminant should be determined or known from previous samples or experience.
2. The chemical operator or other personnel responsible for the disposition of liquid wastes should be consulted regarding the quantity and quality of the liquid waste to be disposed of.
3. The valving steps and other operations relative to liquid wastes should be carefully carried out, and any deviations from normal should receive immediate attention.
4. The volume of liquid routed to the process drain and/or the ILW should be logged (separate entries for each system) in the current BSR logbook.

7.2. Gaseous Waste Disposal

7.2.1. References

Drawings:

P 20310 EC 020 D, Rev. 2, Underground Reactor Water, Air, and Off-Gas Plan

P 20310 EC 022 D, Rev. 2, Profile of 2-in. and 3-in. Off-Gas Lines

P 20310 EC 026 D, Rev. 1, Decay Tank Off-Gas Loop

7.2.2. Introduction

Waste gases from the BSR or from the experiments conducted at the BSR, for the most part, will be either radioactive or subject to becoming radioactive. It is necessary, therefore, to route such gases into appropriate disposal systems for clean-up and eventual discharge to the ORNL stack (3039). As is usually the practice, these disposal systems are operated at pressures below atmospheric and are equipped with electrically powered blowers and back-up steam-operated blowers which discharge into the stack. Most of such systems serve several buildings and are used by personnel from several divisions.

7.2.3. Normal off-gas system (NOG)

Functional Description

The NOG is designed to handle routine releases of high-concentration radioactive gases emanating primarily from process equipment or experiments. It is not intended that piping for this system become pressurized. The NOG is exhausted by positive-displacement blowers which form a seal when shut down; consequently, it is undesirable to vent high-pressure

and/or high-volume-flow radioactive gas sources into it since a positive pressure within the system would cause a backflow into the several buildings which use it. At other ORNL reactors, where systems are expected to become pressurized, separate pressurizable off-gas systems are used (see Figs. 7.2 and 7.3, schematics of the off-gas systems servicing the BSR).

In addition to the BSR, the normal off-gas system services the ORR and various laboratories and hot cells; and, as can be seen in Fig. 7.3, it also services the 4500 Building area. The 3-in.-diam line from the BSR ties into the 8-in.-diam stainless steel underground duct from the ORR (near the southeast corner of Building 3042). The 8-in. line from the ORR connects into Building 3126 (normal off-gas filter system), and on to the common off-gas system in the 3039 stack area. The gas decontamination equipment for the system consists of a continuously operating, recirculating scrubber which uses 1% NaOH solution for iodine removal and a particle-filtering system consisting of a roughing prefilter, an absolute filter, and, downstream from the scrubber, a washable stainless steel particle filter.

Normally, suction is supplied for the system by electrically driven, positive-displacement blowers. In the event of an electrical power outage or malfunction of the electrically operated blowers, an auxiliary steam-turbine-powered blower is started automatically to provide continuity of operation.

At the BSR, process equipment serviced by the NOG includes the decay tank, the demineralizer units, the degasser tank, and certain pool piping. In this application, the NOG collects

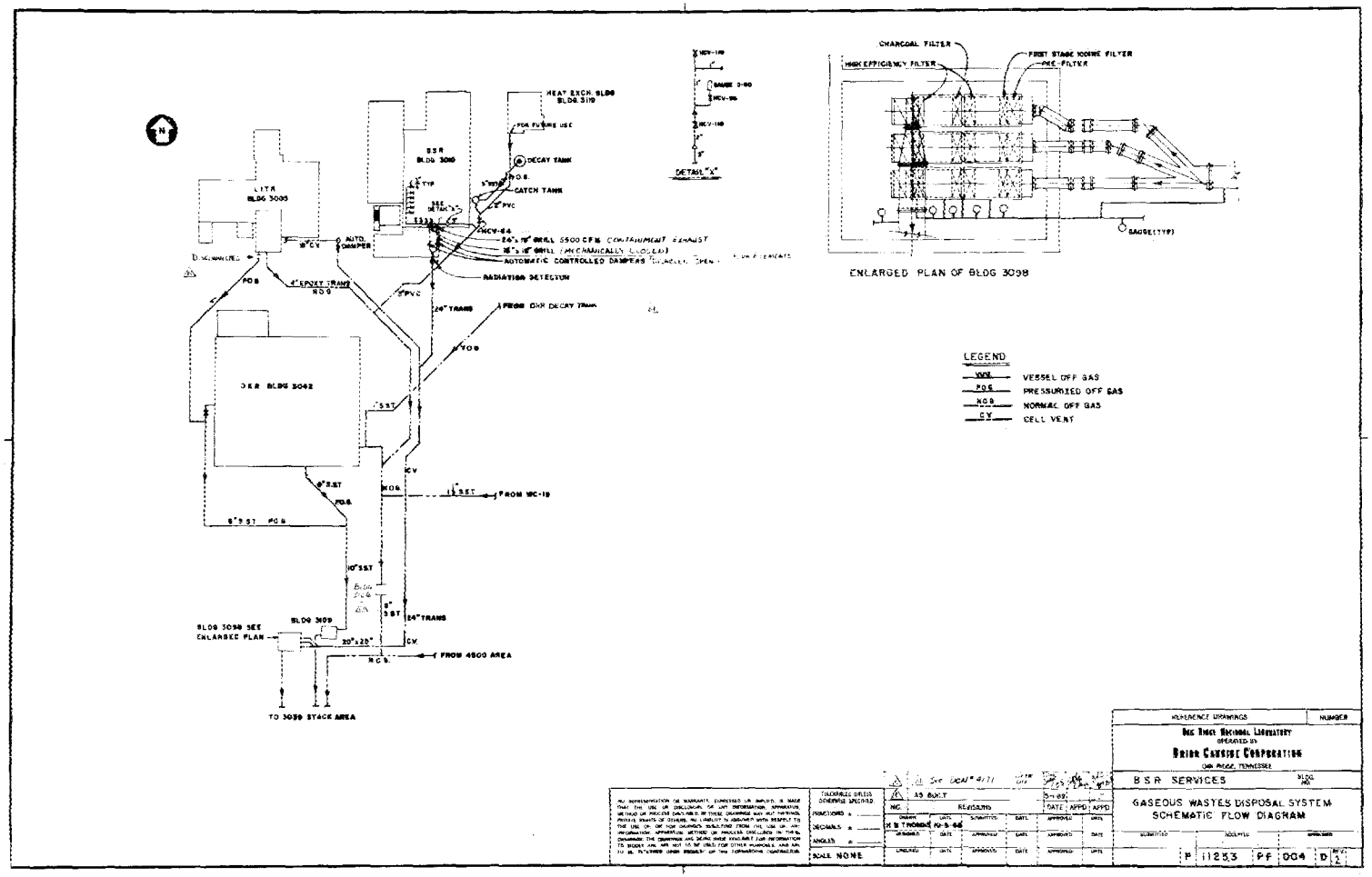

Fig. 7.2. Gaseous waste disposal system.

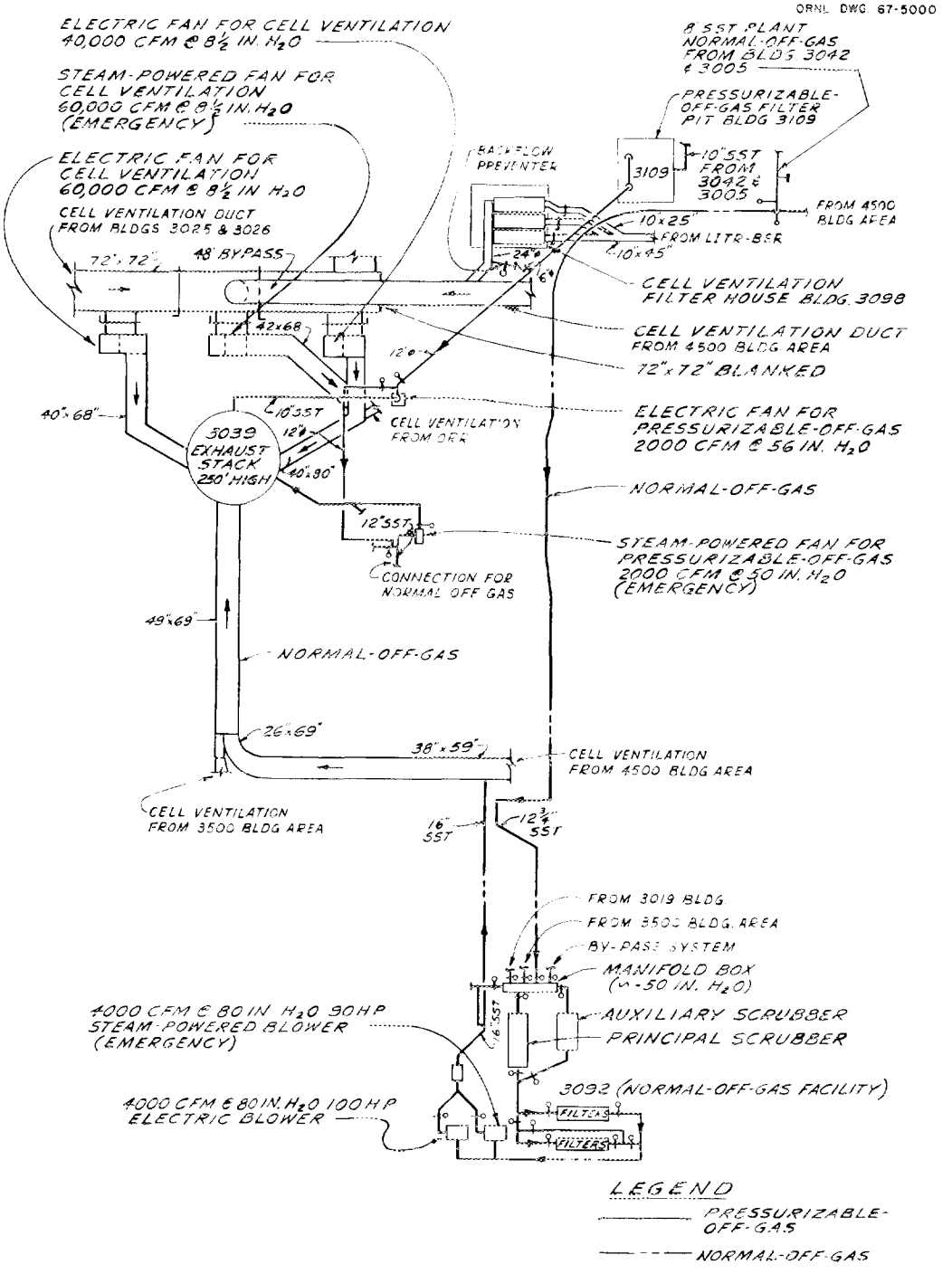

Fig. 7.3. Flow diagrams of gaseous waste disposal systems in the stack area.

any gases which are released from the reactor cooling water or which may be vented during filling, draining, or regenerating of demineralizers.

NOG service is also provided for the experimenters (and occasional use by Operations) by way of a 1-in. pipe header which is located overhead along the south and west sides of Building 3010. This header is equipped with 3/4-in. access ports at approximately 4-ft. intervals as indicated in Fig. 7.2 and is used primarily as the discharge point for low-flow experiment cooling gases and as a vent for low-volume experiment systems.

Operational responsibility

The Reactor Operations Section is responsible for the operation and maintenance of that part of the NOG system located in the reactor complex and extending to the junction with the NOG header from Building 4500. This portion of the system is shown in Fig. 7.2.

That portion of the system located in the stack area and consisting mainly of the NOG header, the scrubbers, the blowers, and the stack itself, is operated and maintained by the Laboratory Facilities Section of the Operations Division.

Instrumentation

Local. Instrumentation for the NOG is quite simple, as there is no annunciation or control action in the event of a loss in negative pressure. The instrumentation consists of: (1) a gauge in the control room (normally showing the negative pressure to be minus approximately 28 in. of H_2O) and (2) a compound gauge mounted near the junction of the experiment

header and the 3-in.-diam line located at the southeast corner of the pool. The control room gauge receives its signal from a differential pressure transmitter as described in Section 3.2 of this manual.

Stack area. Instrumentation for the NOG (Laboratory Facilities Section) is located in the Building 3105 control room and includes monitors of the blower status, flow, pressure, pressure drop across the filters and scrubber, and the radiation level of the effluent gas.

Operational procedures

Normal operation. In general, the NOG system at the BSR remains in service without interruption. Under these conditions, no special operating procedures are necessary; however, the following rules apply.

1. Experiment connections to the system must be approved by the reactor supervisor or his desginated representative. Approval of the Experiment Coordinator may also be requested if thought necessary.
2. The system should not be opened to atmosphere sufficiently to cause a loss of vacuum in the header which serves the ORR as this might result in an ORR shutdown.

Removing the system from service. It will, upon occasion, be necessary to remove the local system from service for repairs and alterations, or the system will also be removed from service should the ORR NOG be shut down. The following steps apply.

1. Shut down and tag out the BSR and the BSR primary cooling system.

2. Determine that there is no experiment from which gas is flowing into the experiment header. Valve out and tag out any experiment connected to the system. (Obtain approval of the experimenter.)
3. Close valve HCV-84 (process off-gas) and valve HCV-118 (experiment off-gas) and tag out.

   NOTE: If local repairs and/or alterations are being made, it may be necessary to remove only one part of the system from service.

Returning the local system to service

1. Determine that all local NOG lines are intact and leak tight.
2. Open valves HCV-84 and HCV-118.
3. Observe the gauges in the system to determine that the system returns to its normal vacuum.
4. Remove (with proper approval) any tags remaining on valves, start switches, and similar equipment.
5. Restore the reactor and the cooling system to normal operation if needed.

7.2.4. The cell-ventilation system (CV)*

Functional description

The cell-ventilation system is designed to remove air from the reactor building, filter it, then discharge it to the atmosphere via a 250-ft.-high stack. The primary purpose of this

*The cell-ventilation system is also referred to as the building-ventilation system.

system is to minimize the spread of airborne radioactivity in the event an accidental release of such material occurs in the reactor building.

During normal operation, outside air enters the BSR building via seven air-conditioning units, two gravity-operated dampers, and normal building in-leakage. Air is removed from the building via the cell-ventilation system, the rest room exhaust fans, and, upon occasion, the roof exhaust fans.

The BSR cell-ventilation system itself, as shown in Fig. 7.2 consists simply of two ducts connecting the BSR building with a 24-in.-diam duct which leads to a filter system near the 3039 stack area. The smaller of the two ducts was originally used for normal flow, but its use was discontinued after the flow from the LITR was reduced to an insignificant amount.

Air passing through the filter system, in turn, discharges into the cell-ventilation duct from the 4500 area (laboratory system). It should be noted that the BSR duct is joined by an 18-in. duct from the LITR just south of the BSF building (Building 3010). During normal operation, the flow rate through the BSR system (all through the east duct) is about 4500 cfm. The air pressure within the building is consequently maintained slightly below atmospheric pressure (normally, at a negative pressure of about 0.03 in. H_2O). The flow rate is essentially constant and is sensed by two Pitot-Venturi tubes located in the east duct.

A small flow of air (approximately 150 cfm) enters the system from the LITR (tank ventilation and drying system).

This air is introduced to the LITR tank in an effort to prevent the collection of condensate in that system. This air flow from the LITR may not be changed without special permission from the reactor supervisor.

When containment is effected, either manually or automatically, all air-conditioning equipment and exhaust fans will be de-energized. In addition, the louvers for the air-conditioning units and exhaust fans will close along with the gravity-operated dampers. As a result, all the air leaving the building will be via the cell-ventilation system. Tests indicate that there is little change in flow in the system; consequently, the building pressure decreases to about -0.05 in. H_2O.

Before being discharged to the atmosphere through the 250-ft-high 3039 stack, the air exhausted from the BSR is filtered to remove airborne particles and radioiodine should they be present. The filter system (located in Building 3098) consists of three parallel filter banks in which particle and iodine filters are arranged in series. The filters are housed in sealed metal housings. Each filter bank consists of (in the direction of flow) a prefilter, an iodine filter, an absolute particle filter, a second iodine filter, and a second absolute particle filter. Following is a description of each type of filter:

1. Prefilters. These consist of two filter elements each in metal frames whose overall dimensions are 24 x 24 x 14 in. deep. Each filter element has a capacity of 2000 scfm with an initial pressure drop of 0.41 in. of H_2O and an efficiency of 90% (NBS spot test) when

loaded with approximately 700 g of NBS Cottrell Precipitate (no linters). The fiberglass filter media is held between layers of scrim cloth and inserted into a rigid asbestos frame. The filter enclosure is galvanized steel with 1/4-in. closed-pore, soft neoprene, dovetail gaskets on both flange faces. The filter units are designated as Mine Safety Appliance Company, Dustfore B-2000, or an approved equal.

2. First-stage iodine filters. The iodine filtering medium is flexible, knitted metallic mesh made of 32-gauge, silver-plated copper wire flattened to size, 18 x 2 mils. The knitted mesh forms a 2-in.-thick filter which is supported by a rigid frame 2 ft wide by 4 ft tall constructed of type 347 stainless steel.
3. Absolute Filters. Each of the two absolute particle filters consists of two filter units which measure 24 x 24 x 17 1/2 in. deep and have a capacity of 1000 cfm. These absolute filters are the standard, pleated, fiberglass type with aluminum separators (available from ORNL stores under stock No. 07-644-0512). These filters remove 99.95% of particles 0.3 microns in diameter or larger.
4. Charcoal Iodine Filters. Each assembly consists of two units in parallel having dimensions of 24 x 24 x 11 1/2 in. and an initial flow rating of 1000 cfm, with a pressure drop of 1.0 in. of H_2O. Each filter element is a pleated, perforated steel enclosure containing high-purity, coconut-shell charcoal treated

with iodine (or an approved equivalent) to contain a minimum of 50 mg of elemental iodine per gram of charcoal in a uniform bed thickness of 1 in. $\pm$ 1/8 in. - 0. The charcoal is thoroughly compacted to prevent further settling during use. The filter flanges are seated in the support frames on 1/2-in.-thick, closed-cell, soft neoprene, dovetail gaskets.

The suction fans for the BSR cell-ventilation system are the same ones used for other Laboratory cell-ventilation systems and are located in the 3039 stack area (see Fig. 7.3 in which the fans are labeled "electric fan for cell ventilation" or "steam fan for cell ventilation"). Operation of the fans is the responsibility of the Laboratory Facilities Section, which is also in the Operations Division. Normally, the two electrically driven blowers are in operation with the steam-driven fan in standby for emergency use. The turbine is kept hot by a small, continuous flow of steam so that the emergency system can be in full operation 30 s after the signal to start. The emergency system is started automatically when flow stops in the discharge duct of either fan or when the negative pressure in the suction duct of the system is lost. Two parallel, steam supply lines are provided for the emergency turbine - one is opened by an automatic air-operated valve, the other by an automatic steam-operated valve. After the steam fan is started, automatic dampers that close when the ΔP is in the proper direction isolate the electrically powered fans; and other automatic dampers open to put the steam-powered fan on the line.

During emergency conditions such as electrical power outages, electrical power is supplied to the Building 4500 area cell vent fan, Buildings 3025 and 3026 cell vent fan, Isotope area cell vent fan, Building 3500 cell vent fan, and other items such as stack area radiation monitors by a battery-started diesel-driven generator located in Building 3125.

Requirements

It is required that the cell-ventilation system be in service and operating properly if the reactor is to be started up or operated. The supervisor in charge, with the help of Operations personnel as required, is responsible for determining that this requirement is met. He shall accomplish this requirement by knowing at all times the condition of the system and its various components. Information relative to the condition of the system is found on the various check sheets described in the "Functional Checks" section of this procedure.

Operational Responsibility

The Reactor Operations Section is responsible for that part of the system which relates strictly to the BSR and/or LITR, including the filtering equipment. The Laboratory Facilities Section is responsible for all components downstream of the filter pit exit dampers.

Each department is expected to maintain an operating procedure, test procedure, maintenance program, and spare parts inventory for its respective area of responsibility.

Instrumentation

Local. As is indicated in the description of the system, instrumentation is provided to place the 3010 Building in containment automatically upon increase of the radiation level in the building or in the duct leaving the building. In addition, activation of the coincidence circuit of the Facility Radiation and Contamination Alarm System will also place the building in the containment mode.

This radiation detection device for the building itself is a MON-113, beta-gamma monitor, the chamber for which is located above the door to the control room annex (designated as the high bay monitron). The electronics for this instrument are located on vertical panel A.

A Q-3006 radiation monitor located on vertical panel A is used for monitoring the duct. The probe for this instrument (ORNL Dwg. Q-3006-8) is located in the exit duct (vertical run) at the south side of the Building 3010 annex.

Electrical contacts within these instruments are wired into the containment circuit as shown on drawing E-10310-ED-007-D. This drawing also shows the electrical tie-in of the Facility Radiation and Contamination Alarm System.

Flow in the cell vent system is sensed by two Taylor Instrument Company Model 88579 Pitot-Venturi tubes which are located in the east duct about 10 ft from the south side of Building 3010. Flow transmitters, located on the south wall of the annex to Building 3010, transmit a pneumatic signal to a flow recorder located on vertical panel I in the BSR control room. The output signals from the transmitters are also piped to flow switches which in turn actuate a low-flow annunciator (3025 cfm).

Filter area. Each of the three filter banks is equipped with four differential pressure gauges which provide an indication of the pressure drop across each filter in the system. The location and range of these gauges is shown in Fig. 7.4. In addition, there are two differential pressure gauges which compare the pressure in the inlet and exit header ducts to that of the atmosphere.

Stack Area. The instrumentation in the stack area is under the management of the Laboratory Facilities Section and, therefore, will not be described in detail here. It, however, does include monitors for pressure, flow, pressure drop, and radiation.

Operational procedures

Normal operation. As might be inferred from the description of the system, very little effort on the part of the operator is required during normal operation. In fact, it is only necessary that sufficient checks be made to determine that the system is functioning properly. This requirement is satisfied through completion of weekly, monthly, quarterly, semiannual, and yearly checks of the various parts of the system as described in the "Functional Checks" section of this procedure.

Emergency operation (containment mode). The procedure for operation of the system in the containment mode is given in Section 10, Emergency Procedures.

Removing the system from service. In the event filter banks are to be switched, serviced, or tested, the only manipulation of valving required is to close the inlet and exit

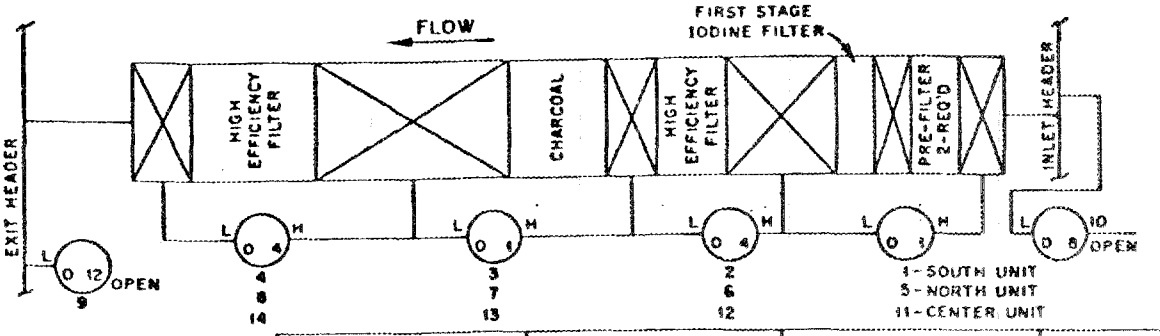

				SOUTH					CENTER					NORTH					AIR FLOW (CFM)	
DATE	9	10	ΔP = 9-10	1	2	3	4	TOTAL	11	12	13	14	TOTAL	5	6	7	8	TOTAL	RED PIN	GREEN PIN

GAGE NO.	LOCATION	RANGE-INCHES WATER
1, 11, AND 5	PREFILTER & FIRST STAGE IODINE	0 – 1
2, 12, AND 6	FIRST ABSOLUTE He-1	0 – 4
3, 13, AND 7	CHARCOAL	0 – 1
4, 14, AND 8	SECOND ABSOLUTE He-2	0 – 4
9	EXIT HEADER	0 – 12
10	INLET HEADER	0 – 8

DATA SHEET
B.S.R. BLDG. VENT. FILTER PIT

Fig. 7.4. Building ventilation filters.

valves at the filter (Building 3098). Reiterating, there must be a minimum of one filter bank in service for the BSR if the reactor is to be administratively permitted to operate.

Functional checks. The pressure drops across the filters in service are to be checked routinely as specified on the BSR Routine Checklist (8-4 Shift), see Example 12.4, and recorded on data sheets as shown in Fig. 7.4. The pressure-drop check is to be done once each week as a minimum but may be done more frequently.

A complete functional check of the system is to be made quarterly, following the procedure given in Example 7.1. This check will normally be made during the time that the BSR is shut down for quarterly instrument checks.

To ensure filter reliability, each filter bank is subjected to efficiency tests every six months and must meet the minimum Laboratory removal efficiency requirement of 99.95% for particles greater than 0.3 micron and 99.9% for elemental iodine (particle filters and charcoal filters, respectively). For the dioctyl phthalate (DOP) test of the particle filters, the filter bank must be valved out of service. For the elemental iodine test of the charcoal filters, the filter bank being tested must remain in service.

The radiation monitors in the Facility Radiation and Contamination Alarm System are also subjected to a functional check both by the reactor operating crew (on the 12-8 shift) and by Instrumentation and Controls Division personnel. (Any abnormalities should be reported to the Instrumentation and Controls Division.)

Date_____

Shift_____

BSR CONTAINMENT SYSTEM
QUARTERLY FUNCTIONAL CHECKS

In addition to the routine checks, a complete functional check is performed during each quarterly shutdown for instrument checks. Satisfactory results must be obtained before reactor operation can be resumed.

Initial of Supervisor
In Charge of Test

1. Placing the building in containment.

_____ a. Notify the operator at the remote console and place the "local-remote switch" in the REMOTE position. The containment electrometer alarms will be received at his control room in addition to being received at the BSR control room.

_____ b. Announce via the public-address system that the radiation monitors and containment system will be tested.

_____ c. Using a radioactive source ($\geq$100 mr/h at 6 in.), increase the background at the cell-ventilation duct probe until the setpoint (10 mr/h) is reached. The meter at the vent duct module should be observed during this test, and the actual reading when containment is effected recorded. Actual reading _____.

_____ d. Instantly, complete building containment should be effected.

_____ (1) Building containment alarm light at containment junction box should burn.

_____ (2) Alarm light at vent duct module, vertical panel 2, should burn.

Example 7.1.

_____ e. Wait approximately five minutes and then record the negative pressure inside the BSR building.

(1) First level, north door _____
(2) First level, south door _____

The building pressure readings during the test should be approximately -0.04 in. of water or better. If this vacuum is not obtained, survey the building for excessive leaks. Repair the leaks and repeat the test until the expected conditions are met.

_____ f. While the building is in containment, make the following checks at the cell-ventilation filter house, or in the control room.

(1) Record the duct header pressures.

(a) Exit duct pressure _____

(b) Inlet duct pressure _____

(c) Difference _____

(2) Record the pressure drops across the cell-ventilation filter pit components.

	North Bank	South Bank	Center Bank
(a) Prefilter (in. H_2O)	____	____	____
(b) Absolute No. 1 (in. H_2O)	____	____	____
(c) Charcoal filter (in. H_2O)	____	____	____
(d) Absolute No. 2 (in. H_2O)	____	____	____
(e) Total ΔP (in. H_2O) - sum of a, b, c, and d	____	____	____

Example 7.1. (continued).

(3) Record the flow (cfm) as indicated on the Control Room recorder.

(a) Red pen _____

(b) Green pen _____

_____ g. While the building is in containment, check the four test ports (use smoke generator) in the walls of the 3010 building to determine that air flows into the building when each cover is open.

(1) North wall _____

(2) South wall _____

(3) East wall _____

(4) West wall _____

NOTE: If inleakage is not detected, notify the BSR supervisor immediately.

_____ h. Determine that the cell-ventilation duct module returns to normal.

_____ i. Return the building to normal status by pushing the "reset" button at the containment junction box.

_____ j. Using a source (as in 1.c. above) obtain containment from action of the building high bay radiation monitor. The chamber is located overhead approximately 20 ft above the door to the control room annex. Observe the meter on vertical board 1 and record the reading when containment is obtained. Set point should be 110 mr/h. Actual reading _____.

_____ (1) Containment alarm light should light at the containment juction box.

_____ k. Push the "reset" button at the containment junction box and determine that the circuits return to normal.

Example 7.1. (continued).

_____ l. Determine that containment can be effected from the Facility Radiation and Contamination Alarm System (coincidence circuit).

_____ (1) Close the valves between the nitrogen tanks and the evacuation horn (local horn station).

_____ (2) Announce over the public-address system that the evacuation horns will be tested.

_____ (3) Notify the emergency Control Center (4-6646) that the evacuation horns will be tested.

_____ (4) Using two sources, simultaneously increase the radiation levels at two building monitrons (first and third quarters) or two building constant air monitors (second and fourth quarters) until the high-level alarm points are reached.

_____ (5) A short blast of the evacuation horn should occur, and containment should be effected.

_____ (6) Return the Facility Radiation and Containment Alarm System to normal status.

_____ m. Push the "reset" button at the containment junction box and determine that the circuits return to normal.

_____ n. Obtain containment manually by pushing the black button on the remote console (labeled "BSR Containment").

_____ o. Reset the containment circuit by pushing the "reset" button on the containment junction box.

_____ p. Obtain containment manually by turning the "test-normal" switch located on the containment juction box to TEST.

_____ q. Reset the containment circuit by turning the "test-normal" switch located on the containment junction box to NORMAL.

_____ r. Determine that all heating and cooling units return to normal operation (approximately 2-min delay before start).

Example 7.1. (continued).

7.3. Solid Waste Disposal

7.3.1. Introduction

Standard ORNL practice is followed in the disposal of solid waste. All nonradioactive, solid waste is disposed of in the Laboratory's sanitary land-fill area.

Low-level radioactive waste is placed in yellow-painted cans which have been lined with plastic bags. Low-level radioactive waste is separated into two categories; compactible and noncompactible. The yellow-painted cans are identified as to the category of waste to be stored in them. Non-compactible waste consists of liquids, materials soaked with liquids, and metal, wood or other hard material with any one-dimension greater than 6 in. Compactible waste is all other waste. No radioactive glassware is allowed in the yellow-painted cans, glassware should be disposed of in a special dumpster located between wings 1 and 2 of Building 4500N. All material disposed of in the yellow-painted cans must be able to be contained inside the plastic bags that line the yellow-painted cans. The filled plastic bags are transferred to special yellow-painted dumpsters routinely by the operating crew. These dumpsters are transferred to the burial ground for special disposal handling. (It should be noted that wastes producing radiation of less than 3 mr/h at the surface may be temporarily stored at the work site in yellow-painted cans.)

For highly radioactive, solid waste, special handling procedures are practiced. Sometimes it is necessary to disassemble or cut up components under water or in hot cells,

then remove the smaller pieces in lead casks to the burial ground. In some cases, trucks with shielded cabs must be used.

In the case of filters removed from the off-gas systems, special shields are provided. The filters can be drawn into these shields which are then removed by truck. In all cases, radioactive materials in transit must contain a tag filled out by a Health Physicist (indicating radiation level and destination); final disposal is accomplished by burial using existing ORNL equipment and facilties.[2]

7.3.2. Responsibilities

The supervisor in charge should assume the following responsibilities concerning disposal of solid radioactive waste:

1. Ensure that ORNL shipping requirements will be met concerning radioactive materials (see Section 9.2.6).
2. Ensure that each container (dumpster, carrier, etc.) is surveyed, inspected, and tagged by Health Physics personnel before it is picked up.
3. When handling nonroutine, solid, radioactive wastes (those resulting in radiation levels, at the exterior surfaces of the yellow cans, of 200 mr/h or greater and of 400 mr/h or greater at the exterior surface of the yellow dumpsters), materials must meet radiation-zone requirements during storage; and, when shipped, form UCN-2822 (Example 7.2) must be filled out.

---

[2] F. N. Browder, Radioactive Waste Management at ORNL, ORNL-2601.

REQUEST FOR STORAGE OR DISPOSAL OF RADIOACTIVE SOLID WASTE OR SPECIAL MATERIALS

REQUESTER: EXECUTES THIS SECTION BEFORE ARRANGING MATERIAL TRANSFER

DATE	ORIGIN OF WASTE (BLDG. IF ORNL)	REQUESTER'S SIGNATURE	BADGE NUMBER	PHONE NO.	OFFICE AND BLDG. NO.	ACCT. NO.

TOTAL VOLUME (CU. FT.)	COMBUSTIBLE VOL. (CU. FT.)	WEIGHT (LBS)	ACCOUNTABILITY (MM NUMBER)	TOTAL CURIES IN WASTE (BEST ESTIMATE)

WASTE CLASSIFICATION (CHECK ONE)

1. ☐ TRU OR ^{233}U (> 10 μCi/Kg)
   ☐ TRU OR ^{233}U (10 μCi/Kg or less)
2. ☐ URANIUM/THORIUM
3. ☐ FISSION PRODUCT
4. ☐ INDUCED ACTIVITY
5. ☐ TRITIUM
6. ☐ BETA-GAMMA TRU OR ^{233}U (> 10 μCi/Kg)
   ☐ BETA-GAMMA TRU OR ^{233}U (10 μCi/Kg or less)
7. ☐ ALPHA
8. ☐ OTHER: _____

TYPE OF WASTE (CHECK ONE)

1. ☐ BIOLOGICAL (BW)
2. ☐ CONTAMINATED EQUIPMENT (CE)
3. ☐ DECONTAMINATION DEBRIS (DD)
4. ☐ DRY SOLIDS (DS)
5. ☐ SOLIDIFIED SLUDGE (SS)
6. ☐ NOT CLASSIFIED (NC)

CONTAINER(S) IDENTIFICATION (INDICATE NUMBER OF EACH)

1. ☐ 55 GAL SS DRUM
2. ☐ 30 GAL SS DRUM
3. ☐ 4½" WALL CONCRETE CASK
4. ☐ 6 IN. WALL CONCRETE CASK
5. ☐ 12 IN. WALL CONCRETE CASK
6. ☐ 55 GAL BI DRUM
7. ☐ 30 GAL BI DRUM
8. ☐ WOOD OR ☐ METAL BOX
9. ☐ OTHER
10. ☐ GI CAN
11. ☐ PLASTIC
12. ☐ DUMPSTER
13. ☐ NONE
14. ☐ SHIELDED CARRIER

CARRIER DATA:

WALL THICKNESS _____ IN.; SHIELDING MATERIAL _____ CAVITY DIMENSIONS: _____ X _____ X _____ X HIGH

PRINCIPAL ISOTOPE(S) (BEST ESTIMATE)

1. QUANTITY _____ ☐ GRAM(S) ☐ CURIE(S); IDENTITY _____
2. QUANTITY _____ ☐ GRAM(S) ☐ CURIE(S); IDENTITY _____
3. QUANTITY _____ ☐ GRAM(S) ☐ CURIE(S); IDENTITY _____
4. QUANTITY _____ ☐ GRAM(S) ☐ CURIE(S); IDENTITY _____

REQUESTER'S COMMENTS FOR THOSE HANDLING WASTE IN FIELD:

HEALTH PHYSICIST: EXECUTES THIS SECTION BEFORE MATERIAL TRANSFER

RADIATION DATA:

BETA-GAMMA: FOR PACKAGE _____ mrem/hr. @ _____ IN. OR FOR SHIELDED CARRIER _____ mrem/hr. @ _____ IN.

SURFACE CONT. _____ dpm (β+γ); _____ dpm (α); NEUTRON READING _____ mrem/hr.

HP SURVEYOR'S COMMENTS FOR THOSE HANDLING WASTE IN FIELD:

	HP'S SIGNATURE	PHONE NO.

STORAGE AREA FOREMAN: COMPLETES AND SENDS COPY TO ORIGINATOR AFTER HANDLING WASTE

ACTION TAKEN: (CHECK ONE)

WASTE WAS: ☐ STORED, ☐ BURIED, ☐ COMPACTED, ☐ OTHER _____ LOCATION: SWSA NO. DATE:

FACILITY: ☐ BUILDING ☐ WELL ☐ RAVINE (Check One) ☐ TRENCH ☐ ON GROUND ☐ OTHER

WASTE DESCRIPTION: FACILITY NUMBER: SWSA ATN

LOCATION WITHIN FACILITY

FFO FFT COMP. NO LAYER FILE RANK

FISSILE WASTE DATA:

WELL FULL: ☐ YES ☐ NO

CRITICALITY COMMITTEE APPROVAL FOR: GRAMS

BALE NO.

COMMENTS FROM SWSA FOREMAN REGARDING WASTE AND/OR OPERATION:

FOREMAN'S SIGNATURE

DISTRIBUTION: WHITE - STORAGE AREA FOREMAN RETAINS
BLUE - COMPLETED AND RETURNED TO ORIGINATOR
CANARY - RETAINED BY ORIGINATOR

UCN-2822
(3 8-77)

Example 7.2.

8. UTILITIES

8.1. Potable Water

8.1.1. References

Drawings:

E-46902	Schematic of ORNL Potable and Process Water Distribution System
P 20310 EC 018 D, Rev. 3,	Outside Steam, Air, Process Water and Sprinkler Lines - Plans
P 20310 EC 019 D, Rev. 1,	Outside Steam, Air, Process Water and Sprinkler Lines - Profiles, Sections, and Details

8.1.2. Introduction

The BSR potable water supply is obtained through either of two 24-in.-diam water mains. The normal water main is fed from the ORNL (potable) water reservoir located just north of the Laboratory area at an elevation of 1000 ft. The alternate water main is fed from a 3-million-gal (potable) water reservoir located on Haw Ridge at an elevation of 1035 ft. Both mains are connected in such a manner that water is supplied from either or both sources on demand.

The potable water supply at the BSR is used to service drinking fountains, the fire sprinkler system, rest room plumbing, and the emergency showers. (Figure 8.1 is a schematic diagram of the system.)

8.1.3. Description

One of the main potable-water headers servicing the reactor area is located on the west side of the BSR building. From

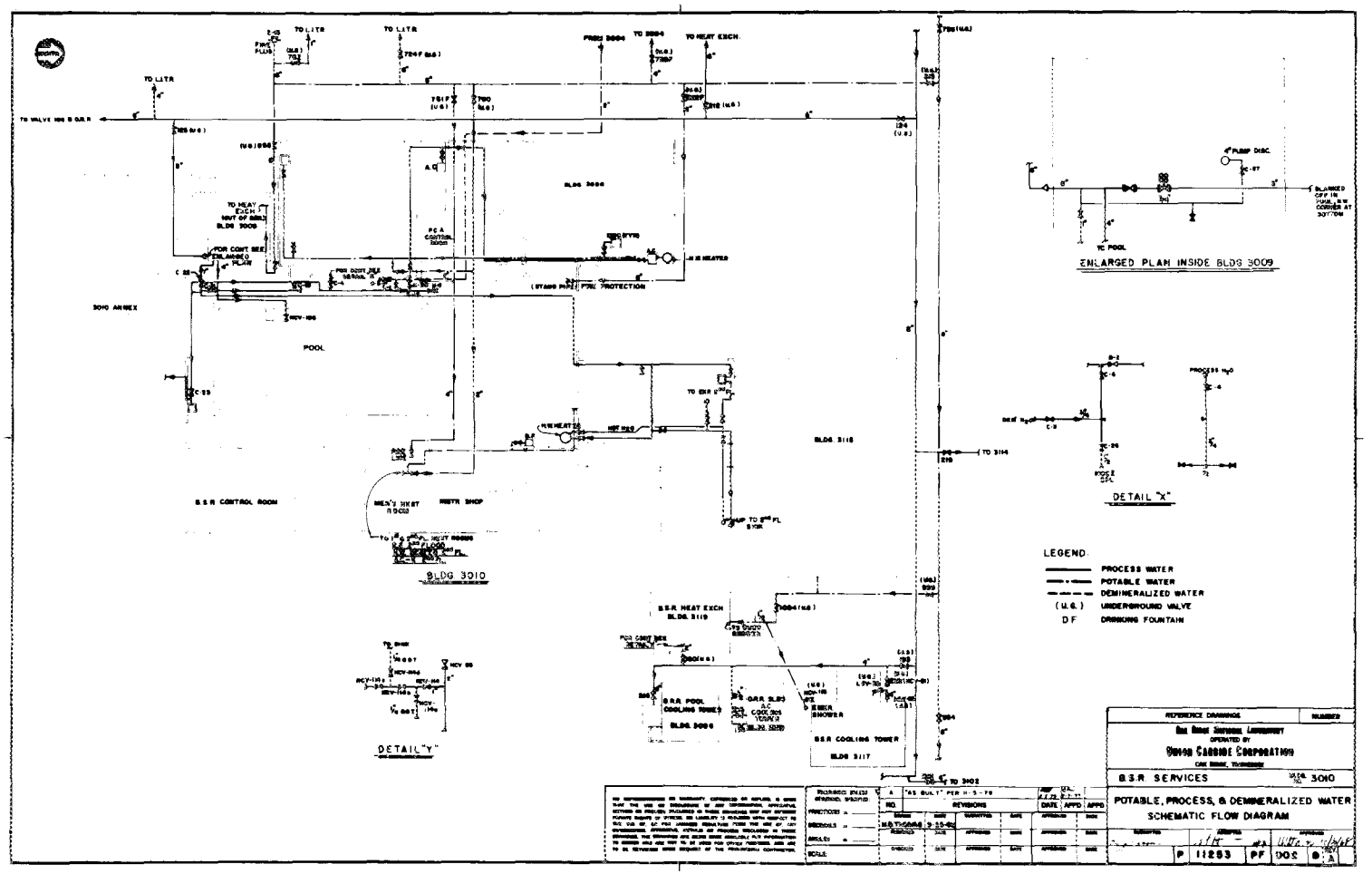

Fig. 8.1. Potable, process, and demineralized water.

this header, four lines enter the building; two lines service the fire sprinkler system (control valves labeled with an F), one supplies the plumbing in the rest rooms, and the remaining line supplies miscellaneous equipment.

8.1.4. Operation procedures

The supervisor in charge of the BSR should be notified if any section of the potable water system is to be isolated for maintenance purposes or is to be returned to service following maintenance, alterations, or additions. The supervisor will direct operational activities in accordance with Laboratory procedures concerning the use and testing of potable water and will work with the Utilities Department in arranging for the manipulation of valves outside the confines of the building.

8.2. Process Water

8.2.1. References

Drawings:

E-46902	Schematic of ORNL Potable and Process Water Distribution System
P 20310 EC 018 D, Rev. 3,	Outside Steam, Air, Process Water and Sprinkler Lines - Plans
P 20310 EC 019 D, Rev. 1,	Outside Steam, Air, Process Water and Sprinkler Lines - Profiles, Sections, and Details

8.2.2. Introduction

The process water supply at the BSR is used to provide emergency shielding for the reactor pool, to provide service to air-conditioning units, to supply makeup water for the tower basin, and to regenerate the demineralizer units located in the heat-exchanger building. Process water lines are also connected to the hot water heater located in the northeast corner of the reactor bay and to two sinks. (This is not a standard practice; hence, water from these sources should not be used for drinking purposes.) See Fig. 8.1 for details of the flow schemes.

8.2.3. Description

The main header (6 in. in diam) is located on the west side of the BSR building. From this header, a line enters the underground vault (through valve 125 located on the hillside west of the building). The piping in the vault includes a hand-operated valve and a motorized valve in series in an

8-in.-diam pipe. These valves have no function since the piping downstream from the valves is no longer in use; and they, consequently remain closed. Preceding the hand-operated valve (in the 8-in.-diam line), a 6-in.-diam line branches to the pool; this is the source of the process water for emergency shielding.

A 6-in.-diam branch header, located north of the reactor facility, supplies process water to the cooling tower basin and to the heat-exchanger building.

It should be noted that process water lines are still connected to such obsolete items as the heat exchanger located on the west side of the reactor building. However, the probability that these items will be used is quite low; and, should they be used, special procedures will be required.

8.2.4. Operational procedures

Operational procedures for those parts of the process water system used for filling and draining the tower, regeneration of the demineralizer, and emergency shielding for the pool are presented in detail elsewhere in this procedure. If any section of the system is to be isolated for maintenance purposes, it should be brought to the attention of the supervisor in charge of the BSR who will provide detailed instructions in compliance with Laboratory procedures and rules.

8.3. Demineralized Water

8.3.1. References

Report:

Operating Manual for the Low-Intensity Test Reactor, Section 8.2., Building 3004 Demineralizer.

8.3.2. Introduction

Demineralized water is added to the BSR pool routinely to compensate for losses caused by evaporation. In the event of an emergency requiring the addition of water to the pool for shielding purposes, demineralized water should be used unless the supply is too limited for this purpose. If the supply of demineralized water is insufficient, process water should be used (see Fig. 8.1 for details of the flow schemes).

8.3.3. Description

The source of demineralized water is the demineralized water plant and storage tank located in Building 3004. A 3-in.-diam line from the supply manifold, located on the west wall of Building 3004, enters the west wall of the BSR building. At the location of the west parapet, two main valves control the flow of demineralized water to the BSR pool (see Fig. 8.1 for valve numbers).

8.3.4. Operational procedures

The procedure for adding demineralized water to the pool (routine addition) is detailed in Section 6.1.8 of this manual, with emergency procedures covered in Section 10.3.2. Otherwise, it is important that the operating crew should remain aware of the status of the demineralized water (quality and level in the storage tank) and the emergency procedure covering a loss of water (shielding) from the reactor pool.

8.4. Compressed Air

8.4.1. References

Drawings:

P 20310 EC 024 D, Rev. 1,	Steam, Air, and Condensing Water - Plan and Sections
P 20310 EC 025 D, Rev. 1,	Steam, Air, and Condensing Water - Plan and Sections, Sheet 2
P 20310 EC 031 D, Rev. 2,	Heat Exchanger Piping Plan
P 20310 EC 033 D, Rev. 2,	Heat Exchanger Piping Sections
P 20310 ED 020 D, Rev. 2,	Underground Reactor Water, Air, Off-Gas Plan
H 20310 EG 008 D	Pneumatic Control System Piping, Sheet 1
RC 15-1-3, Rev. 13,	Instrument Flow Diagram

8.4.2. Introduction

Compressed air at the BSR is used primarily for pneumatic instrumentation such as recorders, air-operated valves, air-operated louvers, and air-operated pistons on the demineralizer units (see Fig. 8.2 for the distribution of the air services at the BSR complex).

8.4.3. Description

Two 1-in.-diam air lines enter the west side of the BSR building via the vault. One 1-in.-diam line is routed to the west side of the pool area; from this line, 1/2-in.- and 1/4-in.-diam tributary lines supply air-conditioning louvers and the pneumatic controls for the spectrometer crane (this instrument is obsolete; see Section 11.5, Auxiliary Equipment). These lines continue to the east side of the building and

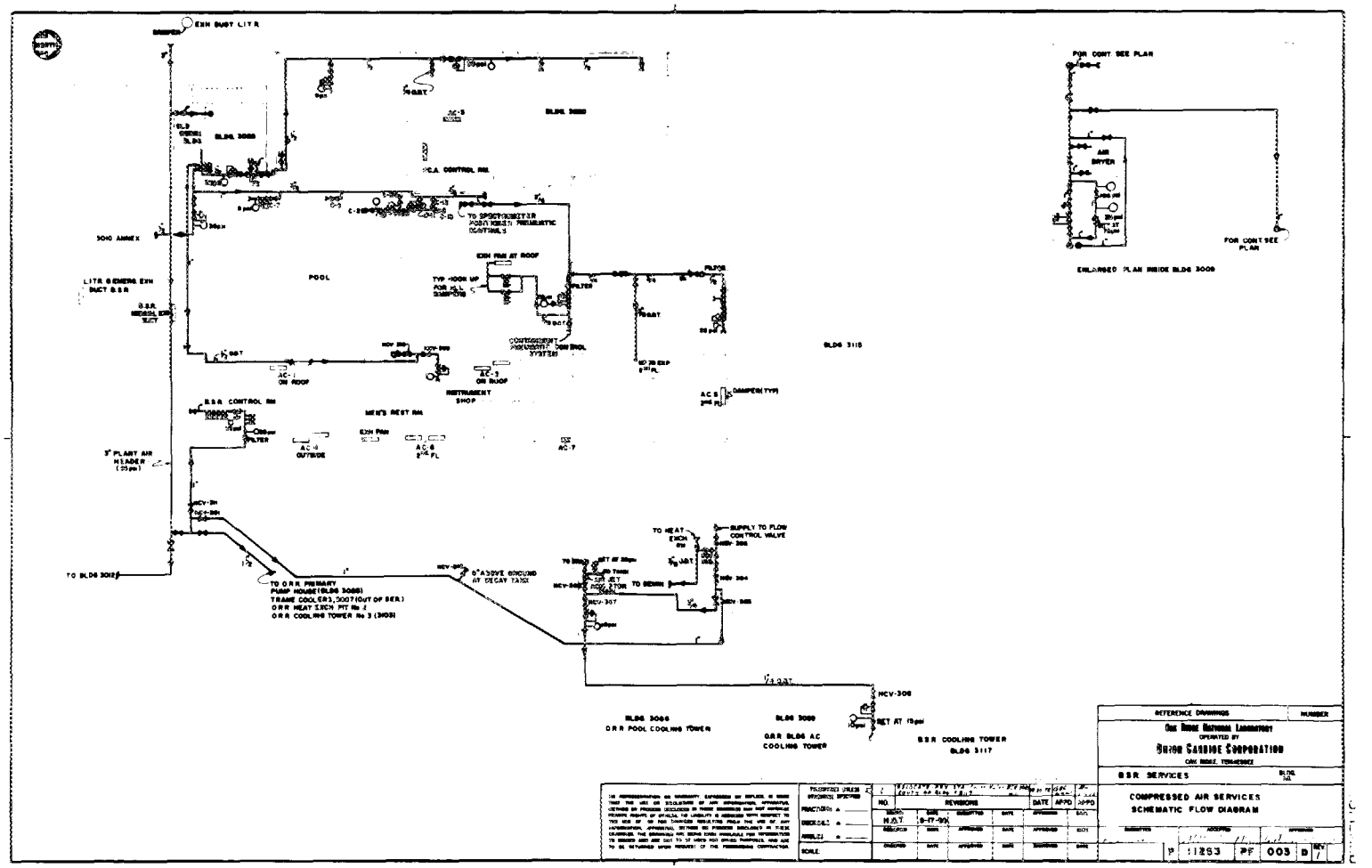

Fig. 8.2. Compressed air services.

supply the cell-ventilation louvers. Another branch from this 1-in. line supplies the experiment annex located on the south side of the BSR building.

The second 1-in.-diam line (also from the vault) is located on the south and east sides of the BSR building; at present, there is no major use of this air-supply line.

A 3-in.-diam header is located on the south side of the BSR building. From this main supply line, a 1-in.-diam line is routed to the ORR pump house. It is from this 1-in.-diam line that a branch line is taken to supply air for the pneumatic instrumentation and air-operated equipment at the BSR control room, decay tank, and pump house.

8.4.4. Operational procedures

1. Valving operations related to specific parts of the reactor complex or to the various experiments are outlined in other sections of this manual.
2. When part or all of the system is to be removed from service, the supervision in charge of the BSR will notify personnel as required and provide detailed instructions. Air lines which supply pneumatic instrumentation require special attention and should not be removed from service without approval of the BSR supervisor.

8.5. Steam

8.5.1. References

Drawings:

P 20310 EC 018 D, Rev. 3, Outside Steam, Air, Process Water, and Sprinkler Lines - Plans

P 20310 EC 019 D, Rev. 1, Outside Steam, Air, Process Water, and Sprinkler Lines - Profiles, Sections, and Details

P 20310 EC 034 D Heat Exchanger Building, Hot and Process Drains and Heating Piping Plan Sections, and Details

8.5.2. Introduction

Steam at the BSR is used for three purposes: as a source of building heat (heaters located throughout the building and at the pump house), to prevent freezing of water in piping at the cooling towers, and to jet water from the sump in Building 3009. The steam is at a pressure of 125 psig and is supplied by the ORNL steam plant (see Fig. 8.3 for details of the flow scheme).

8.5.3. Description

One of the steam-supply lines is routed to Building 3009 before entering the reactor building; this line services the air-conditioning heater units.

A second steam-supply line is located north of the cooling tower. From this main line, a branch is routed to the BSR cooling tower and the pump house.

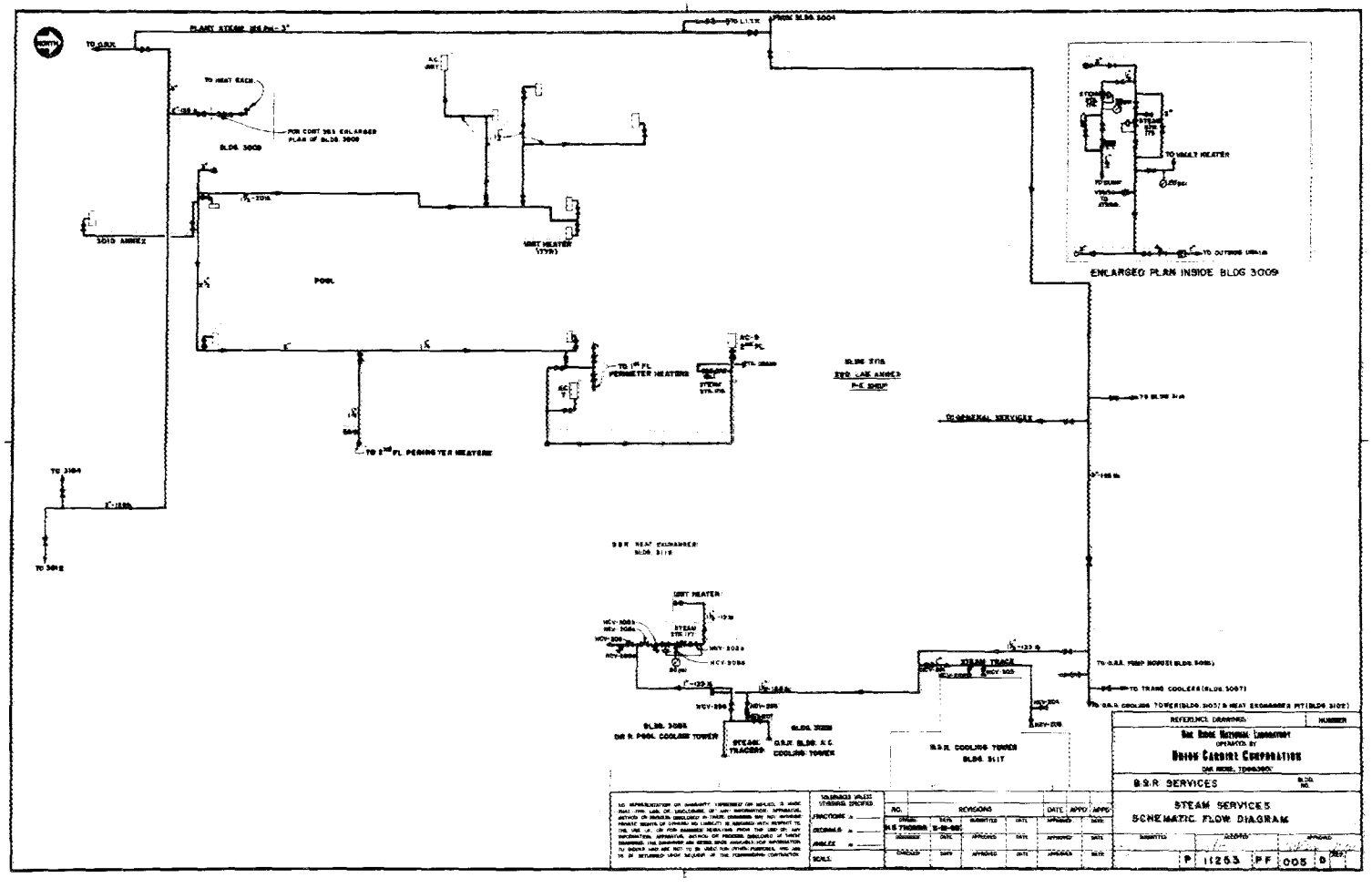

Fig. 8.3. Steam services.

8.5.4. Operational procedures

Normally, the only operational requirements associated with the steam supply is to be sure that there are no freezing problems during the winter. To avoid freezing at the secondary-water risers to the tower, valves HCV-202, HCV-203, HCV-204, and HCV-205 should be opened when the outside temperature drops to freezing. Unless there are abnormal heating trends during the day, these valves are normally left open during the winter months. Valve HCV-201, the main-supply-line valve to the tower, remains open.

Although used infrequently, the automatic steam jet in Building 3009 should be checked routinely. (This check consists mainly of observing that the water level in the sump is below the floor level and that the float-operated valve has no obstructions.)

The steam supply valves to the heater located in the pump house remain open.

In the event certain sections of the steam supply lines are to be isolated for maintenance purposes, refer to the schematic diagrams to see which areas are affected before closing valves and be sure this action has been approved by the supervisor in charge of the BSR.

8.6. Electrical System

8.6.1. References

Drawings:

RC 15-1-5, Rev. 10, Power Distribution Single Line Diagram

RC 15-1-21A, Rev. 7, Electrical Schematic Pumps Tower Fans, etc., Sheet 1

8.6.2. Normal electrical power

During normal operation, the BSR is supplied with electrical power from substation 3000. (The Tennessee Valley Authority supplies 161-kV, 3-phase, 60-cycle power to primary substation 0901 where the voltage is stepped down to 13.8 kV; this is substation 3000's supply.) The output of substation 3000 is 2.4 kV with a capacity of 10,000 kVA.

The power distribution from substation 3000 to the BSR complex is via three main transformers which reduce the voltage from 2400 V to 480 V and 120 V. Two of these transformers are for "clean power" distribution panels in the BSR and PCA control rooms. (Clean power, as used here, refers to power supplies which should be left available for sensitive electronic equipment; these supplies are not to be used for electric motors, etc., which may cause voltage disturbances in the lines.)

One 2400/480/277-V, 3-phase transformer supplies power to the remainder of the reactor complex, Building No. 3080, and the Solid State annex. From this source, electrical power is supplied to the reactor control circuits (for details of the electrical plan, see Fig. 8.4).

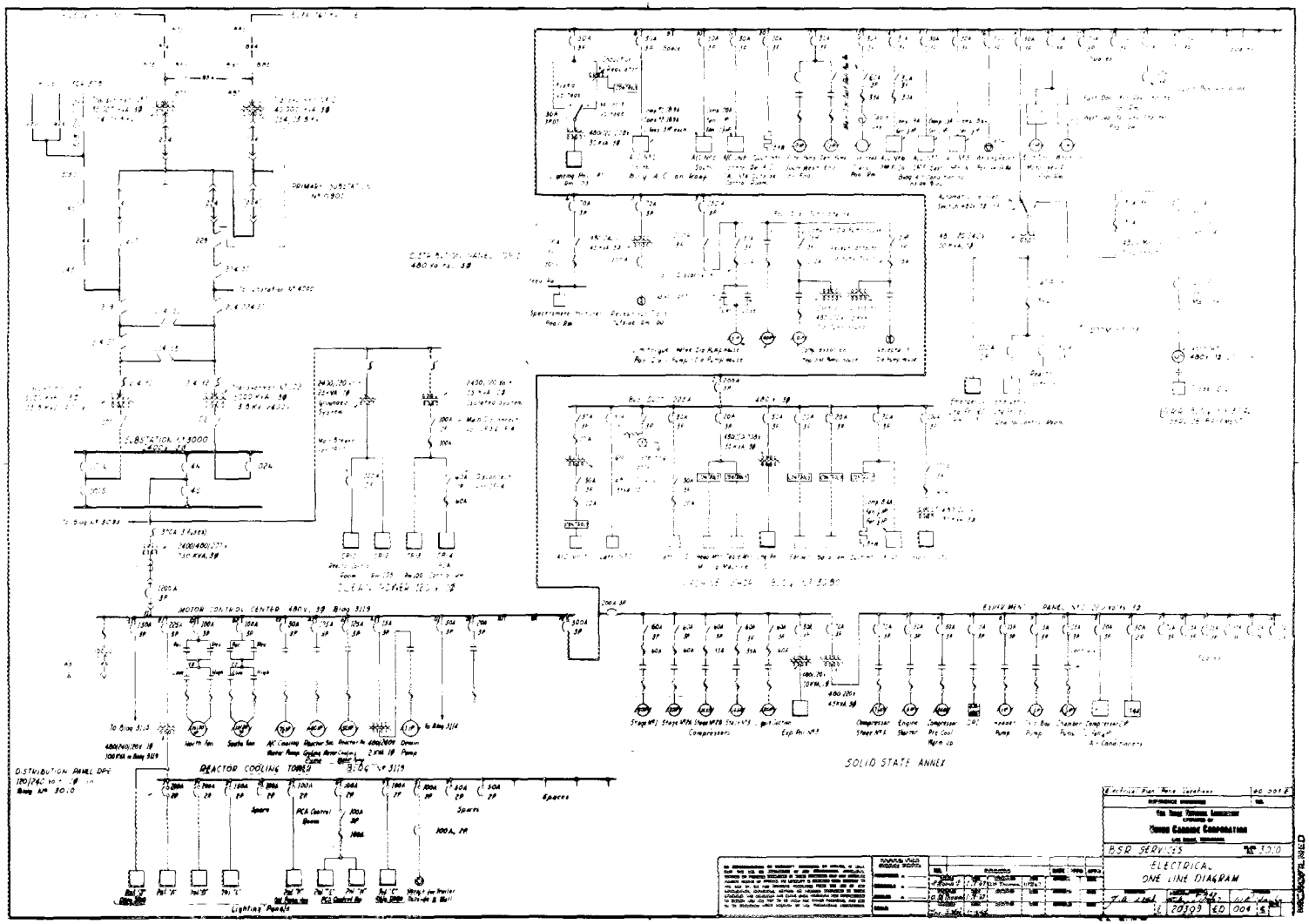

Fig. 8.4. Electrical one-line diagram.

8.6.3. Emergency electrical power

Although the core, after 2-MW operation, requires no forced cooling and presents negligible xenon build-up problems, emergency electrical power is supplied to certain items by a diesel-driven generator in the event there is an interruption in the electrical power supplied by the TVA. If the voltage drops below 70% of normal for 2 s, an automatic transfer switch will transfer the load to the emergency diesel generator (located in Building 3042); and, after approximately 7 to 10 s, the load will be assumed by the diesel generator. (For further details on this subject, refer to Section 10.2.)

It should be noted that there are enough reactor components on the emergency power system to allow operation of the reactor in Mode 1 (no forced cooling required; maximum power level of 1 MW); however, this is administratively prohibited.

8.7. Communication Systems

8.7.1. References

Drawings:

E 10282 D 005 D, Rev. 1,	Facility Radiation and Contamination Alarm System, Sheet 1
E 10282 D 006	Facility Radiation and Contamination Alarm System, Sheet 2
RC 15-10-30	Intercom Elementary Diagram

8.7.2. Introduction

Serving the BSR complex, there are ten alarm and communication systems. These are:

1. the Laboratory-wide public-address system,
2. the reactor-area public-address system,
3. the BSR public-address system,
4. the dial (Bell System) phones,
5. the sound-powered phones,
6. the intercom system,
7. the evacuation alarms,
8. the area fire-alarm system,
9. the closed-circuit television-monitoring system, and
10. the two-way radio system.

8.7.3. Description

1. The Laboratory-wide public-address system. Both local and Laboratory-wide instructions are given over the local public-address system. Announcements over this system are relatively infrequent. The source of such announcements would normally be the Laboratory Shift Supervisor at the ORNL Emergency Center (see Section 10 for Emergency Procedures).

2. The reactor-area public-address system. Microphones for this system are located in two ORR offices occupied by secretaries. Incoming calls to personnel via the dial phones are received by the secretaries, and they use the public-address system to summon personnel to the phone. Another microphone in the maintenance foreman's office in Building 3005 is used to page craftsmen in the field. This system services the ORR-BSR complex.
3. The BSR public-address system. Microphones for this system are located in the BSR control room, the PCA control room, and the ORR control room. These are generally used for announcing reactor startup and shutdown information or paging operating personnel within the BSR complex.
4. The dial (Bell System) telephones. Standard telephones are located in the offices and control-room annex; these are equipped with a three-line rotary system on 4-6997, 8 and 9 and one communication line (the communication line serves the ORR-BSR complex).
5. The sound-powered phones. The sound-powered phone system consists of 2 two-conductor cables (circuit A and circuit B), plug-in jacks, and head-set phones. The system is provided for communication in high-noise areas or in infrequently used areas.

6. The intercom system. "Teletalk" intercom sets are located in the BSR control room, the experiment room on the west side of the pool, the pump house, the ORR control room, and various offices in the ORR building. The master control sets are operated by selecting the particular stations with which communication is desired (lever in the up position) then depressing the "talk-listen" lever while talking and releasing the lever while listening. The auxiliary sets (as in the pump house) have only two buttons atop a small speaker box; the buttons are used to summon the master control sets. A second, less elaborate intercom system connects the pool area and the upstairs office occupied by operating personnel. This system is used primarily to summon operating personnel if the control-room annex is temporarily unoccupied.
7. The evacuation alarms. The building evacuation alarms may be initiated manually from the BSR or the ORR control room. It may be initiated automatically by the facility radiation and contamination alarm system. These are continuous blasts from air-operated horns. For a Laboratory-wide evacuation, the signal will be a 30-s warbling, siren-like wail over the Laboratory-wide public-adress system followed by verbal instructions.
8. The area fire alarm system. The area fire-alarm system has one box, No. 215, located west of the truck doors outside the building. When actuated by a switch

in the BSR sprinkler system, a coded signal is transmitted over the ORNL fire-alarm system indicating the source of the alarm; coded alarms are also given by repeater bells throughout the Laboratory. At the source of the alarm, a fire-alarm horn sounds.

9. The closed-circuit television-monitoring system. With the exception of reactor startups and shutdowns, the BSR is operated remotely from the ORR control room. Since the remote console was designed to have only a few instrument readouts, remote operation of the reactor is made possible by two closed-circuit television cameras in the BSR control room and two monitors in the ORR control room. For details of this system, refer to Section 3.4.

10. The two-way radio system. The ORR-BSR complex is equipped with three two-way radios which provide communication for mobile units or for areas where no other communication is available.

8.8. Liquid Nitrogen

Primarily for the convenience of the experimenters, a liquid-nitrogen supply line is located on the west wall of the reactor bay; the source of the nitrogen is a supply tank located outside the BSR building (north end). Normally, only the experiments use the liquid nitrogen (for the cryostat on the bridge); consequently, no operational procedures are applicable.

9. SAFETY PROCEDURES

9.1. General Safety Requirements

9.1.1. References

Reports:

ORNL Safety Manual

Radiation Safety and Control Manual

9.1.2. Introduction

The reference material cited covers the safety regulations for much of the routine activities engaged in at the BSR. Some of the work performed at the reactor facility is unique, however; and special emphasis must be placed on the safety aspects of these activities.

9.1.3. Requirements for work around the reactor pool

1. The supervisor in charge of the BSR operation must be informed when anyone (Reactor Operations personnel, experimenters, or others) will be engaged in work over or around the reactor pool.
2. All pocket meters, badges, etc., should be taped to the individual's clothing to prevent their falling into the pool.
3. Walking along the top of the pool parapet is prohibited.
4. If the job is such that someone must lean over the bridge or stand on the parapet, the presence of a second individual is required. In addition, two people must be present when the following work is performed:
   a. Handling fuel elements or shim rods.
   b. Handling experiments.
   c. Handling special samples that have been irradiated.

5. When removing materials from the pool, the presence of a Health Physicist may be desirable. In addition, contamination and/or radiation zones must be established if such zones are required (see Section 9.2 for specific requirements).
6. Transparent materials (such as Tygon hose) should not be used on equipment over or in the pool. (Colored Tygon hose is available.)
7. Wrenches and other small tools should be secured to the individual or working bridge via a string, chain, or other means.
8. If a bosun's chair is suspended from the crane to allow someone to perform maintenance over the pool, the crane operator will give full and undivided attention to the operation of the crane during the entire time the person is in the chair. An observer must also be present.

9.1.4. Requirements for handling chemicals

Routine work at the reactor facility requires the use of several potentially hazardous chemicals (such as HNO_3, H_2SO_4, and NaOH, and the commercial mixtures used to treat the cooling tower water). The following safety precautions should be observed when handling these materials.

1. A face shield, rubber gloves, and a rubber apron must be worn when transferring acid or caustic and when checking the specific gravity or level of battery acid (see Section 6.2 for hazards of chemicals used in treating the cooling water for the secondary system).
2. Two men must be present when filling acid or caustic storage tanks (see Section 11.6, BSR Acid Storage Tank, in this manual).

9.1.5. Securing systems with locks and tags

Components of certain systems are required to remain in a particular mode of operation at the BSR complex. Inadvertent or incorrect operation of such components (valves and electrical switches) could have an adverse effect on the reactor and subsequently present a possible radiation hazard to personnel in the BSR area. Locks and tags are used to ensure that inadvertent and unauthorized manipulations are not made. Personnel of the Reactor Operations Section keep the various systems under surveillance and ensure that appropriate control is maintained by securing the systems by one of the following methods:

1. Locked valves and equipment. Any member of Reactor Operations Section supervision shall be responsible for securing any system with a Best padlock (3-A series) if it is deemed sufficiently important that misuse of the controls will jeopardize the safety of the reactor. In addition, each locked valve will be tagged with a "Do Not Operate" tag bearing a statement of the reason for locking the valve, the date, and the signature of the person who locked the valve or equipment. Any member of Reactor Operations supervision shall have the authority to unlock the lock, provided: (a) he has the approval of the person who locked the lock and signed the tag and/or (b) he has completed a thorough investigation which indicates that unlocking the lock and performing the operation in question is safe.

2. Tagged valves and equipment. Any member of Reactor Operations Section supervision shall be responsible for affixing a signed and dated "Do Not Operate" tag

to a component of a system when, in his judgment, this is necessary to protect equipment. Such action would generally be taken when the normal status of a system has been temporarily changed to accomplish a specific purpose. Any member of supervision shall have the authority to remove a tag provided: (a) he has the approval of the person who authorized the installation of the tag and/or (b) he has completed a thorough investigation which indicates that the tag is no longer necessary.

For a list of the valves in the two categories described above, refer to Table 9.1.

Actions which alter the status of a system shall be recorded in the BSR daily log book.

ORNL Safety Manual may be referred to for Safety Standards regarding the use of locks during maintenance as following: (1) Use of locks and lockout tags, (2) Use of Safety Work Permits, and (3) Use of "Do Not Operate" tags and other safety related tags.

Table 9.1. Valves in the BSR area that should either be tagged or locked in their normal position

Valve No.	Normal position		Tagged	Locked	Purpose of valve
	Opened	Closed			
C-1		x	x		Demineralized water makeup to pool
C-8	1	1	x		Process water supply to the liquid nitrogen cryostat facility
C-14	x		x		Process water supply to valves C-8 and C-20
C-20	x		x		Process water supply to air-conditioning unit in Building 3080
C-22	x		x		Process water supply to liquid helium facilities
C-23	x		x		Process water supply to liquid helium facilities
HCV-82	x		x		Secondary cooling water to corrosion sample holder
HCV-106		x	x		Emergency process water supply to the pool
HCV-201	x		x		Steam to cooling pump (secondary and air-conditioning units)
HCV-301	x		x		Air supply to Building 3119 (BSR pump house)
HCV-302		x	x		Air supply to jet for transferring acid to regenerant tank

[1]Variable - depending on experimenter.

Table 9.1. (continued)

Valve No.	Normal position Opened	Normal position Closed	Tagged	Locked	Purpose of valve
HCV-311	x		x		Air supply to BSR control-room instruments
CHV-85		x	x		Exit primary water line vent on the reactor bridge
HCV-71	x		x		Exit primary water line vent (east pool side)
HCV-73		x	x		Syphon break vent on primary water system (east wall bay area)
HCV-72	x		x		Inlet primary water to pool (east walkway valve pit)
HCV-86		x	x		Vent on inlet primary water line (outside east of control room)
HCV-50		x	x		Water test valve on line to primary water pump (pump house)
HCV-51	x		x		Inlet primary water to primary water pump (pump house)
HCV-52		x	x		Inlet primary flow to bypass filter column (pump house)
HCV-53		x	x		Exit primary flow from bypass filter column (pump house)

Table 9.1. (continued)

Valve No.	Normal position Opened	Normal position Closed	Tagged	Locked	Purpose of valve
HCV-54		Variable	x		Exit primary flow from heat exchanger (pump house)
HCV-55		x	x		Water test valve on discharge side of heat exchanger
HCV-75		x	x		High-point vent to heat exchanger for primary flow
HCV-95	x		x		Normal off-gas from degasser tank
HCV-95a	x		x		Normal off-gas from degasser tank
HCV-95b	x		x		Normal off-gas from degasser tank
HCV-84	x		x		Off-gas line (outside east of control room)
HCV-83	x		x		Air sweep line on top of the decay tank
HCV-89		x	x		Water test valve on secondary cooling line (under heat exchanger)
HCV-92		x	x		Vent on orifice inlet to secondary cooling (above heat exchanger)
HCV-93		x	x		Vent on orifice exit to secondary cooling (above heat exchanger)

Table 9.1. (continued)

Valve No.	Normal position Opened	Normal position Closed	Tagged	Locked	Purpose of valve
HCV-80	x		x		Secondary cooling water, header for sample, blowdown lines
HCV-80a	1	1	x		Secondary cooling blow-down valve
HCV-80b		x	x		Secondary cooling water sampling valve
HCV-82	x		x		Secondary cooling water to corrosion sample holder
HCV-56	x		x		Inlet primary water to demineralizer pump (pump house)
HCV-57	x		x		Exit primary water from demineralizer pump
HCV-60		x	x		Water supply to jet acid from regenerant tank to cation column
HCV-78		x	x	x	Regenerant valve for acid to cation column
HCV-64	x		x		Exit primary flow from demineralizer
HCV-65	x		x		Exit primary flow from demineralizer

[1]Depends on total solids.

Table 9.1. (continued)

Valve No.	Normal position Opened	Normal position Closed	Tagged	Locked	Purpose of valve
HCV-62		x	x		Water supply to jet caustic into anion column of demineralizer
HCV-61		x	x	x	Regenerant valve for caustic to anion column
HCV-76		x	x		Heat-exchanger drain for primary water
HCV-77		x	x		Vent on top of heat exchanger for primary flow

9.1.6. Requirements concerning the use of mercury

The use of mercury around the reactor complex should be avoided due to its severe corrosive action on aluminum. The use of mercury around the pool is definitely prohibited in order to avoid the most remote possibility of contact with the aluminum cladding of the fuel elements.

Exceptions to the "mercury-prohibited" rule have been permitted only under regulated conditions. Requests for deviations (made to the reactor supervisor) are reviewed by the reactor supervisor and/or members of the Technical Section. If the request is granted, a procedure for handling the mercury is developed. This rule is also applicable to mercury-operated switching devices.

In the case of mercury batteries for the personal radiation monitor carried by each of the operating personnel, existing policies on discarding used batteries must be practiced. (A used battery must be sealed in masking tape and placed in a yellow dumpster.)

9.1.7. Location of safety equipment

Safety and/or emergency equipment intended to promote safe operating practices during normal operating conditions as well as to aid the operating crew in the event of an emergency has been placed at various locations throughout the reactor complex. This equipment includes remote scram switches, fire-alarm boxes, fire-fighting equipment, safety showers,* and radiation monitors. All the operating personnel are responsible for becoming

---

*There are only two safety showers in the BSR complex; one is located in the pump house and one is on the south side of the cooling tower.

familiar with these items and their locations (see Figs. 9.1, 9.2, and 9.3 for the location of the above-mentioned items).

9.1.8. Miscellaneous requirements

1. During the day shift (8:00 to 4:30, Monday through Friday), a qualified supervisor must be in the reactor building if the reactor is operating and/or the doors to the reactor bay are unlocked. With the exception of a reactor startup, shutdown, or maintenance, the control-room doors should always remain locked. When unlocked, the local control room must be attended by qualified operating personnel. A qualified operator must be at the local console during a startup and must remain there until the responsibility for operation has been transferred to the operator at the remote controls. During off shifts, the reactor bay doors must remain locked and the building Security System placed in "SECURE" if the bay area is unattended by Operations personnel.
2. All personnel working in the proximity of the reactor must carry two dosimeters and an ORNL security badge. All personnel in the Reactor Operations Section should also carry their PRMs (personal radiation monitor).
3. In general, two persons will be present when work is performed in confined or out-of-the-way places (such as at sumps, tower basins, tower fans, etc.).
4. Whenever an individual intends to work alone in the area after normal working hours, he should notify the shift supervisor (4-6997) when he arrives and when he leaves.

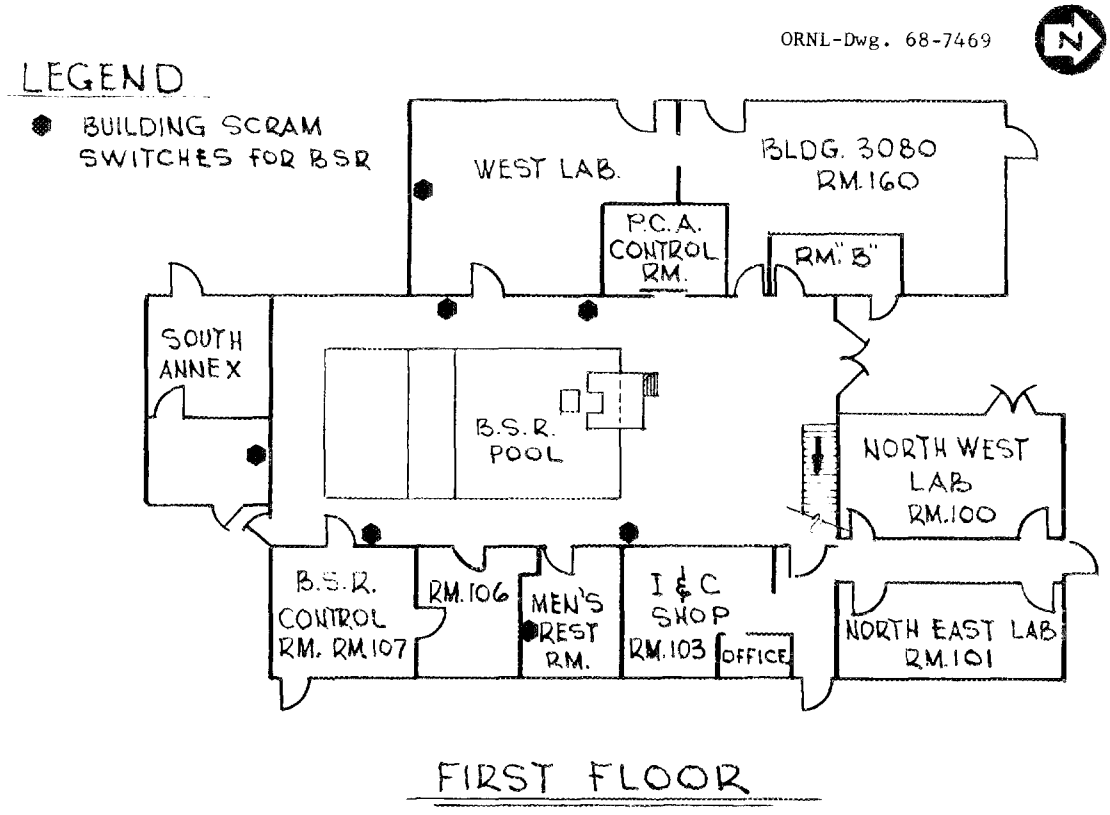

Fig. 9.1. Location of seven remote scram switches on 1st floor of BSF, Building 3010.

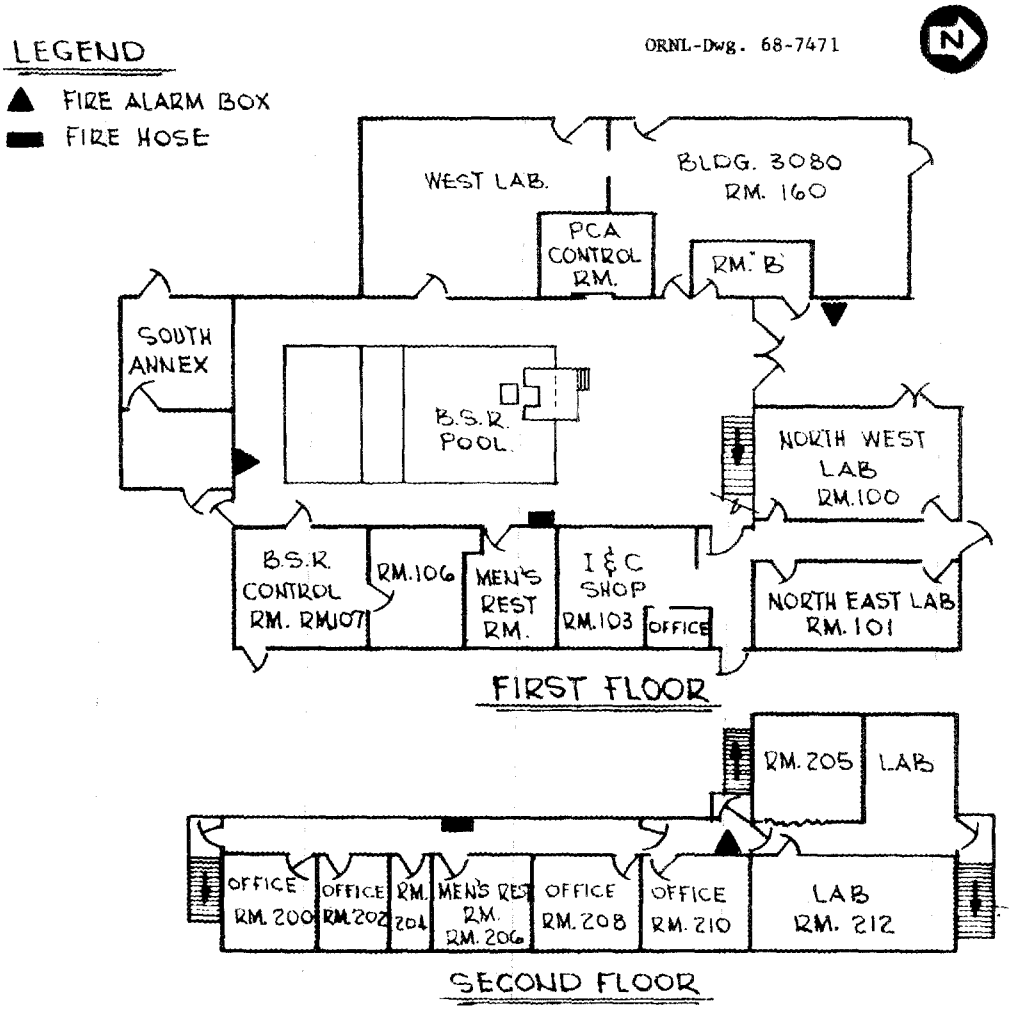

Fig. 9.2. Fire protection system.

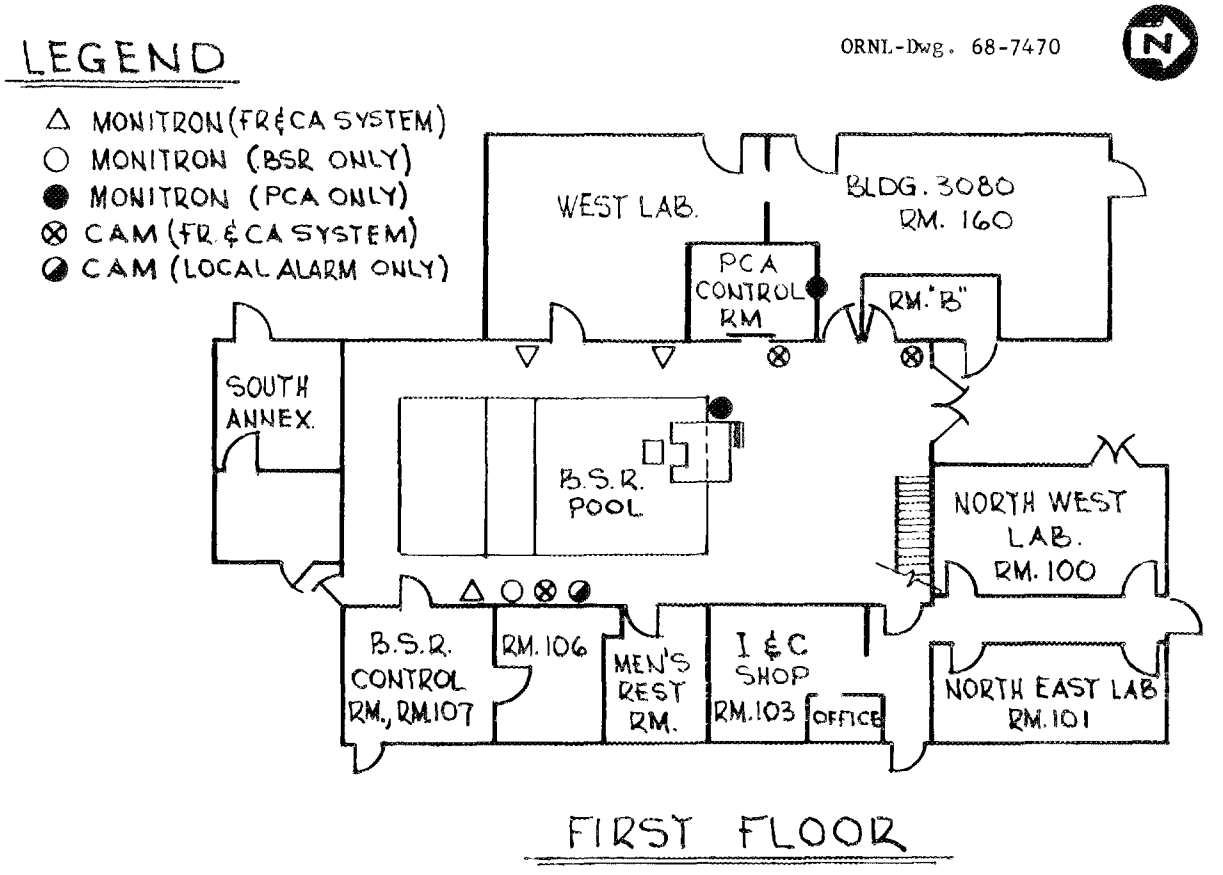

Fig. 9.3. Location of monitrons and continuous air monitors in BSF, Building 3010.

5. All personnel responsible for operations of the reactors in the section are required to attend an annual fire-prevention lecture. Members of the emergency squads are required to complete periodic first aid training courses.
6. All the regulations of Safety Procedure 3.1, in the Safety Manual, will be obeyed upon entering a confined space (as defined by Safety Procedure 3.1).

9.2. Radiation Safety and Control

9.2.1. References

Reports:

Procedures and Practices for Radiation Protection

Reactor Operator Study Handbook

Reactor Operations Fiasco File

9.2.2. Introduction

It is the policy of the Operations Division, Reactor Operations Section, to:

1. Carry out all operations with the lowest reasonable personnel exposure to radiation and contamination. In no case shall internal and external exposures exceed the recommendations of the Federal Research Council and the National Committee on Radiation Protection.
2. Perform all work in such a manner that losses resulting from contamination are minimized. Such losses may include research, development, and production time;

facility and/or equipment abandonment; and the cost of cleaning up contamination.

3. Maintain environmental contamination at a level as low as is consistent with sound operating practice. In no case shall the atmospheric and water contamination exceed the maximum permissible concentration values for the neighborhood of an atomic energy installation.[1]

9.2.3. Responsibilities

According to Laboratory policy, the primary responsibility for radiation safety rests on division supervision and Industrial Safety and Applied Health Physics Division functions are essentially advisory; however, Health Physics personnel are alert to radiation hazards and do report them. Only the division concerned is assumed to be familiar enough with its own operations to evaluate the hazards involved; however, Health Physics personnel's advice on radiation and contamination control is sought when deemed necessary. It is, therefore, the responsibility of supervision to:

1. See that all areas are surveyed for radiation as required.
2. Establish appropriate boundaries and portals for zoned areas.
3. Assist Health Physics in the posting of zone signs with up-to-date instructions.

---

[1] Radiation Safety and Control Training Manual, ORNL, p. iii.

4. Provide suitable clothing-change stations for personnel working in contamination zones, with provision for storage of personal effects if needed.
5. Provide a supply of required contamination zone clothing and equipment.
6. Establish eating places as required and in accordance with Industrial Safety and Applied Health Physics specifications.

Industrial Safety and Applied Health Physics provides personnel monitoring, building and area surveys, exposure and survey records, consultation, and other services as required.

9.2.4. Exposure limits

The permissible occupational dose for an individual is that dose, accumulated over a long period of time or resulting from a single exposure, which carries a negligible probability of severe somatic or genetic injuries.

1. Maximum permissible dose - normal conditions. The values indicated in the following tables are maximum values, and only in exceptional cases should the accumulated RBE (relative biological effectiveness) dose be permitted to exceed 10% of the values given.

Table 9.2. Maximum permissible dose (MPD) in rems

Organ	MPD in any 13-week period (rems/13 weeks)	MPD per year	MPD age proration total (N = present age)
Total body, head and trunk, lens of eyes, gonads, or blood-forming organs	3	12	5(N-18)
Skin of whole body, thyroid	8	30	30(N-18)
Hands and forearms, feet and ankles	20	75	75(N-18)
Bone	30/4n*	30/n*	(30/n)(N-18)*
Other single organs	4	15	15(N-18)

*This n is referred to as the "relative damage factor." It is one for radium isotopes and for gamma radiation; otherwise, it is set equal to five for all radionuclides in bone.

Table 9.3. Weekly maximum exposure limit recommendations

Organ	Weekly maximum recommended limit* (external) in mrems
Total body, head and truck, lens of eyes, gonads or blood-forming organs	100**
Skin of the whole body	600
Hands and forearms, feet and ankles	1,500

*Laboratory-wide standards.

**The Reactor Operations Section limits are 50 mrem/week on whole-body doses to fully ensure compliance with Laboratory standards, with the other limits correspondingly cut in half.

Table 9.4. Approval required for exposure to high dose rates

Dose rate range (rem/h)	Special approvals required		
	Area Division Director	Industrial Safety and Applied Health Physics Division Director	Deputy Laboratory Director
5-20	x		
20-50	x	x	
Over 50	x	x	x

In addition, when planned doses exceed the weekly limits, the following approvals are required:

Authorized Dose Accumulation	Special Approvals Required
>60 mrem per single day to nonoperating personnel and/or >300 mrem per single week to operating personnel	Division Director in charge of individual
>1 rem per single exposure	Division Director in charge of individual and Deputy Laboratory Director

2. Maximum permissible dose - emergency conditions. The emergency conditions which justify the maximum permissible dose a person may receive are:
   a. when another person's life may be saved;
   b. when large-scale releases of radioactive material (dust, gas, or liquid) that may endanger other people's lives or health may be averted; and
   c. when considerable damage to a facility may be averted.

It is obvious that, if sufficient time exists, the Health Physicist should be consulted and an acceptable technique for a planned dose should be followed.

The Laboratory's acceptable emergency dose to persons regularly sustaining measureable exposures is 10 rem. For all others it is 25 rem.

9.2.5. Zoning requirements

1. Radiation zone. A radiation zone is an area in which control measures are established to prevent or minimize external radiation exposure (see Table 9.5).

Table 9.5. Regulations for posting and establishing radiation zones

Dose-rate range	Immediate action	Follow-up action
2.5 mrem/h to 5.75 mrem/h	Post low-level tag if the accumulated daily dose to personnel may be 20 mrem	Periodic review
6 mrem/h to 1 rem/h	Post warning signs or tags	Rope off the area if the accumulated weekly dose may be 1 rem
1 rem/h to 3 rem/h	Post warning signs or tags, rope off area	Erect a barricade which provides absolute exclusion of personnel if the accumulated weekly dose in the area may be 12 rem; lock or block the entrance
>3 rem/h	Post a guard until a temporary barricade has been erected; lock and/or block entries	

2. Contamination zone. A contamination zone is an area in which control measures are established to prevent or minimize internal radiation exposure and the spread of the radioactive contaminant.

A contamination zone should be established when one or more of the following values is exceeded.

Type of Radiation	Air Contamination (c/cc)	Direct reading Surface Contamination	Transferrable Surface contamination (dpm per 100 cm^2)
Alpha*	2×10^{-12}	300 d/m/100 cm^2	30
Beta-Gamma	3×10^{-10}	0.25 mrad/h	1000

*The alpha surface-contamination levels are maximum values and are derived primarily to serve as a guide when the contamination involves a small area such as a single room or cell. When the contamination is extensive and involves radionuclides such as plutonium or some other long-lived emitter of comparable toxicity, the alpha levels permitted should average no more than 1/10 of the above values.

3. Regulated zone. A regulated zone is an area in which operations are restricted in order to control contamination. This zone may contain radiation zones, contamination zones, or both, ranging in size from a small spot to a large area.

4. General entry requirements

   a. Radiation Zones. Operating personnel, when entering a radiation zone, should always carry their film badges, pocket pencil meters, and personal radiation monitors. In addition, radiation surveys, monitoring instruments, and direct-reading dosimeters may be required.

   b. Contamination Zones. In addition to film badges, pocket pencil meters, and personal radiation monitors, operating personnel should wear "C" clothing (coveralls or lab coats), gloves, and shoe covers when entering contamination zones. Other items which may be necessary are: cap; assault mask, for air contamination; survey instruments; paper towels or smear papers; direct-reading dosimeters; and a continuous air monitor.

      In situations in which gross contamination is known or may be expected, two pairs of coveralls should be worn; the outer pair should be removed immediately upon leaving the "C" zone to prevent spreading the contamination. In all cases, persons and equipment leaving a "C" zone must be monitored at the exit of the zone for

contamination to prevent the spread of radioactive materials into places where people normally take no protective precautions.

c. Regulated Zone. Persons entering the regulated zone from a contamination zone must be monitored for contamination.

9.2.6. Requirements for shipping irradiated materials

It is the responsibility of the supervisor in charge to ensure that all containers holding irradiated materials are within radiation and contamination tolerances before allowing them to be transferred from the building. The containers must be surveyed by an Industrial Safety and Applied Health Physics surveyor; he must also affix a tag designating the contents, the level of radiation, and the level of contamination (see Example 9.2). Shielding and cleaning requirements should be such that the radiation levels listed in the following table (Table 9.6) are not exceeded.

Table 9.6. Shipping requirements for radioactive materials

Nature of shipment	Direct reading radiation level	Transferable contamination (dpm per 100 cm^2)	
		Alpha	Beta-Gamma
Containers for shipment within the plant area	1 r/h at 1 ft.	30	1000
Containers for shipment outside the plant area (by commercial carrier)	200 mr/h at contact	30	500*

*The tolerance allowed on the spent fuel carriers is 1000 dpm per 100 cm^2; these containers are shipped on special consignment.

9.2.7. Radiation surveys

Since it is conceivable that radiation levels may change from time to time or increase slightly without reaching the preset points of the radiation alarm system, the reactor complex is surveyed weekly on a routine basis and records of background radiation levels are maintained. The specific areas surveyed are listed on a special form (Example 9.2). It is the responsibility of the supervisor in charge to evaluate these data on a comparative basis with previously obtained data and investigate any unexplained, significant changes. (Completed forms are filed in the BSR control room office.)

UCN-2785
(3 10-61)

RADIATION
HAZARD

RADIATION SURVEY READINGS

EXTERNAL DOSE RATE

Beta _____ mrem/hr at _____
_____ mrem/hr at _____
Gamma _____ mrem/hr at _____
_____ mrem/hr at _____
Neutron _____ mrem/hr at _____

TOTAL DOSE RATE _____ MREM/HR at _____
_____ MREM/HR at _____

SURFACE CONTAMINATION

ALPHA (MAX) PROBE _____ d/m/100 cm²
SMEAR _____ d/m/100 cm²

BETA-GAMMA (MAX) PROBE _____ mrad/hr
SMEAR _____ d/m/100 cm²

Surveyed by _____ Date _____

MATERIAL TRANSFER—SEE OTHER SIDE

RADIATION
HAZARD

DESCRIPTION OF CONTENTS

☐ COMPACT SOLID ☐ LIQUID ☐ GAS ☐ FINE POWDER

CHEMICAL FORM

RADIOISOTOPE CONTENT (μc, mc, c) IF KNOWN

_____ _____ _____
_____ _____ TOTAL _____

SHIPPER LOCATION

RECEIVER LOCATION

RECEIVER NOTIFIED OF SHIPMENT ☐ YES ☐ NO

PRECAUTIONS AND INSTRUCTIONS
FOR HANDLING, OPENING, STORAGE, OR DISPOSAL

SEE OTHER SIDE

MATERIAL TRANSFER

Example 9.1.

BSR AREA RADIATION SURVEY

PERFORMED BY _____ REASON _____

DATE _____ TIME _____

NOTE: A survey meter (G-M counter) which will read a maximum of 20 mr/hr shall be used for this survey with a cutie pie used when the radiation level is greater than 20 mr/hr.

LOCATION			PRE-SET POINT RAD. READ. (mr/hr)	MAXIMUM BACKGROUND READING (mr/hr)
1. Control Room	Control Console			
2. Reactor Bay	Walkways	East		
		West		
		North		
		South		
	Over Reactor (at bridge)			
	Skimmer System Filter Columns			
3. Pump House	Primary Pump Inlet			
	Demineralizer - North of Shield Wall			
	Demineralizer - Cation			
	Demineralizer - Anion			
	Heat Exchanger			
	Filter Column			
4. Outside Area	Decay Tank			
	Degasser Tank			
	NOG Catch Tank			
	Manhole for Primary Flow Orifice			
5. Lab Area	South Lab and Equipment Room			
	West Lab - North Section			
	West Lab - South Section			
6. Shops	Instrument Shop			
7. Second Floor	Hallway			

UCN-3145
(3 4-69)

Example 9.2.

9.2.8. Radiation and contamination monitors

To help maintain a high degree of operating safety in regard to radiation hazards, there is a number of radiation alarm units throughout the reactor complex. These units are:

1. The monitrons and continuous air monitors of the facility radiation and contamination alarm system (monitrons initiate a low-level alarm at 7.5 mr/h and a high-level alarm at 23 mr/h; the continuous air monitors initiate a low-level alarm at 1000 counts/min and a high-level alarm at 4000 counts/min).
2. The high-bay monitron, which alarms at 110 mr/h.
3. The cell-ventilation duct monitor, which alarms at 10 mr/h.
4. The log gamma radiation monitor west of the control room, which alarms at 5 r/h.

For a detailed description of these systems, refer to Section 3.5.

9.2.9. Analysis of reactor primary water

A knowledge of the nature of the radioactivity in the reactor primary water is of importance for quality control; and, in the event there were a contamination problem or an abnormal increase in the amount of specific radioactive nuclides in the water, this knowledge would be beneficial in evaluation procedures.

A daily check of the gross β-γ activity of the reactor water is made by Operations personnel. The results of this check, reported as dis min^{-1} ml^{-1}, are recorded and used as a guide to indicate changes in the radioactive content of the water. In addition, yearly samples are submitted for ionic

and radioactive analyses. The sample schedule is staggered; i.e., at a specified date a 1-gal sample of reactor primary water is submitted to the General Analysis Laboratory for a standard qualitative and quantitative analysis; six months later, a 1-gal sample is submitted to the Radiochemical Analysis Laboratory for an analysis of the radioactive nuclides. (These samples should be accompanied by a "Request for Control Analysis" form, UCN-1910.)

As with the daily checks, the supervisor in charge is responsible for scanning the data received (and logged) for any abnormal trends.

Typical analytical reports (filed in the BSR control room office) reveal the following information:

1. From the General Analysis Laboratory - F^-, 0.76 ppm; NO_3^-, <1 ppm; SO_4^{--}, <0.2 ppm; Cl, <0.5 ppm; Cu, <0.03 ppm; Ni, <0.03 ppm; Fe, <0.02 ppm; Cr, <0.02 ppm; Si, <1.7 ppm; Al, <0.02 ppm; U, <0.01 ppm; Ca, <0.02 ppm; Mg <0.005 ppm; and Na, <0.11 ppm.
2. From the Radiochemical Analysis Laboratory (in dis min^{-1} ml^{-1} - ^{24}Na, 3.2×10^3; ^{133}I, 5.9; ^{131}I, <0.2; ^{103}Ru, <0.2; ^{106}Ru, <0.2; ^{137}Cs, <0.06; ^{90}Sr, <3; ^{89}Sr, <0.3; ^{239}Np <3; ^{143}Ce, <0.3; ^{141}Ce, <0.2; and ^{140}Bs, <2.2.

9.3. Work Permits

9.3.1. Introduction

Oak Ridge National Laboratory policies require that the necessary safety precautions be exercised in connection with work performed at the Laboratory and, in certain instances, that a work permit be completed prior to the performance of the work. It is the responsibility of the Reactor Operations supervisor in charge to be aware of the need for such permits and to maintain the records as indicated on the forms.

9.3.2. Radiation work permits

The "Radiation Work Permit" (Example 9.3) is used in situations where personnel may be exposed to radiation or contamination in excess of certain limits. Operating personnel assigned to a particular process may not need a radiation work permit for routine work where there are posted regulations. The radiation work permit is required as follows:

1. For nonoperating personnel.
2. Where specified by other procedures or special situations.
3. When an individual may receive greater than 20 mrems, whole body dose.
4. When radiation fields exceed 5 rems/h.
5. When air contamination exceeds the maximum permissible concentration.

The radiation work permit specifies the precautions and monitoring required and provides a record of the necessary approvals and doses accumulated in doing the work. This form

RADIATION WORK PERMIT (RWP)	DATE AND TIME FROM AM PM TO AM PM	EXTENDED BY TO AM PM	WORK PERMIT NO. R- Nº 47730

LOCATION & JOB DESCRIPTION

RADIATION SURVEY DATA (To be filled in by Health Physics)

LOC. CODE	SPECIFIC LOCATION AND DISTANCE FROM SOURCE	TYPE OF RADIATION	mrem/hr.	WORKING TIME FOR _____ mrem	CONTAMINATION TYPE	CONTAMINATION MEASUREMENT	RADIATION SURVEY BY	RADIATION SURVEY DATE AND TIME
A								
B								
C								
D								

INSTRUCTIONS*

HEALTH PHYSICS MONITORING REQUIRED: ☐ START OF JOB ☐ INTERMITTENT ☐ CONTINUOUS ☐ END OF JOB

CONTACT HP FOR SURVEY BEFORE STARTING WORK IN A NEW LOCATION		PROVIDE ASSISTANCE FOR REMOVAL OF PROTECTIVE CLOTHING	
TAPE COVERALLS TO GLOVES AND FOOTWEAR		MONITOR BREATHING ZONE	
CHECK TOOLS AT END OF JOB		NASAL SMEAR REQUIRED	
CHECK PERSONNEL AT END OF JOB		BIOASSAY SAMPLE REQUIRED	
TIMEKEEPING REQUIRED		DO NOT WORK ALONE - STANDBY OBSERVER REQUIRED	

REMARKS

PROTECTIVE EQUIPMENT AND MONITORING INSTRUMENTS

CAP		COVERALLS (1 PR.)			SHOE COVERS		POCKET METERS
CANVAS HOOD		COVERALLS (2 PR.)			C-ZONE SHOES		DOSIMETER
SAFETY GLASSES		GLOVES	CANVAS		RUBBERS		FILM RING
EYE SHIELD		GLOVES	LEATHER		RUBBER BOOTS		DOSE-RATE ALARM
HALF MASK		GLOVES	SURGEON'S		PLASTIC BOOTEES		DOSE ALARM
ASSAULT MASK		GLOVES	PLASTIC		LAB COAT		CUTIE PIE
CHEMOX MASK		GLOVES	RUBBERIZED CANVAS		SPECIAL FILM METER		GMS METER
AIR-LINE HOOD		GLOVES	HOUSEHOLD RUBBER				
AIR-LINE SUIT							

REGULAR APPROVALS	SPECIAL APPROVALS
HEALTH PHYSICS CERTIFICATION	DIVISION DIRECTOR
SUPERVISION	H.P. DIVISION DIRECTOR
SUPERVISION	DEPUTY LAB DIRECTOR

UCN-2779 (3 7-61) *Only items checked (✓) apply. (OVER)

Example 9.3.

1. Health Physics shall be present for line breaks or removal of shielding.
2. Notify Health Physics of any deviations from instructions and changes in working conditions.
3. Personnel survey is required when leaving contamination zones.
4. Return work permit to Health Physicist upon completion of job or expiration of permit.

TIMEKEEPING BY _____

DEPT. _____

PERSONNEL AND EXTERNAL EXPOSURE CONTROLS						PLANNED EXPOSURE (mrem)	TIME RECORD							ESTIMATED EXPOSURE (mrem)
NAME	DEPT.	P.R. NO.	LOCATION CODE	DOSE RATE USED	WORKING TIME		BEGIN	END	BEGIN	END	BEGIN	END	TOTAL TIME	

1. **Radiation Work Permit is required* when:**
   (a) expected dose is > 20 mrem to the body or 300 mrem to extremities for an individual during a single work assignment;
   (b) dose rate > 5 rem/hr (total body);
   (c) airborne radioactivity is > $(MPC)_a$ for a 40-hr week;
   (d) specified by divisional operating rules and procedures or by posted regulations.
2. **Supplementary Time Sheet**
   To be used if extra space is needed for the timing of individuals into and out of an area, etc.
3. **Special Approvals**
   (a) Dose Rate rem/hr (total body)
   > 5 Division Director in charge of work area — Oral or written; noted and initialed on the permit by the person obtaining the approvals.
   > 20 Above and Health Physics Division Director.
   > 50 Above and Laboratory Deputy Director.
   (b) Dose (total body)
   > 60 mrem/day for nonoperating personnel, or > 300 mrem/wk for operating personnel — Division Director in charge of individual
   > 1 rem — Above and Laboratory Deputy Director
4. **Copies**
   (a) The RWP must be posted or available at work site.
   (b) Health Physics maintains a copy for record and reference purposes.
   (c) A copy must be distributed to appropriate line supervision.

*Posted regulations may be used in lieu of an RWP for *operating personnel* under specified conditions. (See Regulation 3, Procedure No. 26, ORNL Health Physics Manual.)

Example 9.3. (continued).

is completed only by a qualified Industrial Safety and Applied Health Physics surveyor after a survey is made. The permit must be signed by the Health Physics surveyor making the survey, by the craft foreman in charge of the job, and by a member of Reactor Operations supervision (usually the shift supervisor). Radiation work permits expire at the end of eight hours but may be extended for an additional eight hours by the Health Physicist.

9.3.3. Hazards work permit

A "Hazards Work Permit" (Example 9.4) is required when service personnel are exposed to environmental hazards arising out of work in an area, on equipment, or with materials which they do not have complete knowledge of and over which they do not exercise complete control. Permits are required for, but not limited to, the following situations:

1. Any welding or burning operation.
2. Any operation in which ignition of flammable gases or liquids is possible.
3. Any activity in which release of toxic, corrosive, or highly reactive chemicals is possible.
4. Work to be performed in the presence of mechanical or physical hazards such as moving machinery, dangerous heights, high pressures, etc.
5. Any change in the status of equipment, facilities, or system that would create additional hazards or eliminate any safeguards against hazards.

Hazards Work Permit forms must be completed by the craft foreman and signed by that foreman and by a member of Reactor Operations Section supervision.

HAZARDS WORK PERMIT

ISSUED TO: FOREMAN OR REPRESENTATIVE | BADGE NUMBER | DEPARTMENT | PHONE NUMBER

FROM | SHIFT | DATE | TIME | TO | SHIFT | DATE | TIME | WORK ORDER NO.

LOCATION OF WORK | BUILDING NUMBER | FLOOR | ROOM NUMBER

DESCRIPTION OF WORK

PRECAUTIONS TO BE TAKEN IN PREPARATION FOR WORK

GENERAL PREPARATION	YES	NOT APP'D	FIRE PREVENTION	YES	NOT APP'D
VALVES CLOSED AND TAGGED VALVE NUMBERS			TEST FOR FLAMMABLE VAPORS		
EQUIPMENT DRAINED AND CLEANED			IGNITION SOURCES REMOVED		
PIPELINES BLANKED			WELDING AND BURNING REQUIRED		
MOVING MACHINERY GUARDED			INSTRUCTIONS ON REVERSE SIDE COMPLIED WITH		
AREA ROPED OFF			WELDER'S NAME		
SPECIFY VESSELS VENTED			FIRE WATCHER'S NAME		
OTHER			OBSERVERS		

HEALTH			ELECTRICAL		
TEST FOR TOXIC MATERIAL			NON-ELECTRICAL PERSONNEL EXPOSED TO		
SPECIAL VENTILATION REQUIRED			ELECTRICAL HAZARDS*		
PROTECTIVE EQUIPMENT REQUIRED			CIRCUITS DEENERGIZED, TAGGED, LOCKED OUT		
☐ RESPIRATOR ☐ GLOVES ☐ EYE PROTECTION			SPECIFY		
☐ GAS MASK ☐ CLOTHING					

OTHER PRECAUTIONS

I have personally inspected the work site and certify that the area is cleared for work and that conditions are safe for the work indicated.

SUPERVISOR REQUESTING WORK	PHONE NUMBER	ELECTRICAL DEPARTMENT FOREMAN*	PHONE NUMBER

PERMIT TERMINATION

WORK COMPLETED	PERMIT TERMINATED		WELDING AND BURNING	
	DATE	TIME	TIME STARTED	TIME FINISHED
SUPERVISOR REQUESTING WORK		MAINTENANCE FOREMAN		

COMPLIANCE WITH C-5 (ON REVERSE SIDE)
CHECKED BY:

Distribution: Original given to Maintenance Foreman for display at work site. Duplicate retained by issuing supervisor. Upon termination of the permit, duplicate is completed and maintained for division file. The original is completed by the Maintenance Foreman and forwarded to the Safety Department (to the Fire Department when welding and burning has been performed).

* Approval of Electrical Department Foreman is required when personnel other than electricians will be exposed to electrical hazards.

UCN-9226
(3 11-61)

(SEE REVERSE SIDE FOR INSTRUCTIONS)

Example 9.4.

A. **A Hazards Work Permit** is required where service personnel are exposed to environmental hazards arising out of work in an area, or on equipment, or with materials of which they do not have complete knowledge, and over which they do not exercise complete control. Situations requiring permits, but not limited to these are:

1. Any welding or burning operation.

2. Where ignition of flammable gases and liquids is possible.

3. Where release of toxic, corrosive or highly reactive chemicals is possible.

4. Work to be performed in the presence of mechanical or physical hazards such as: moving machinery, dangerous heights, high pressures, etc.

5. Any change in status of equipment, facilities or system which would create additional hazards or eliminate any safeguards against hazards.

B. **Workers Authorized by Permit** shall ensure that equipment being used is in good condition and that the manufacturer's instructions for maintenance are followed.

C. **Necessary Precautions Against Fire** (Responsibility of Supervisor Requesting Work) when Welding and Burning is being performed.

1. Before welding, make sure sprinklers are in service. Call the Fire Department if in doubt.

2. Before starting, sweep floors clean, wet down wooden floors, or cover them with sheet metal metal or equivalent. In outside work, don't let sparks enter doors or windows.

3. Move combustible material 35 ft. away; cover what can't be moved with asbestos curtains or sheet metal, carefully and completely.

4. Arranges for an employee or employees, equipped with hose, extinguishers, or fire pails to watch sparks and see that they do not start fire. Where fire hazard is slight, the authorizer may assign the task to the observer.

5. After completion, watch scene of work a half hour for smoldering fires, and inspect adjoining rooms and floors above and below. (To be made by authorizer or his designated representative.)

6. Don't use the equipment near flammable liquids or on closed tanks which have held flammable liquids until properly purged and tested, so that formation of an explosive atmosphere inside is impossible. The Safety and/or Fire Department will advise in this matter. If work is to be done on pipes, ducts, etc., any combustible insulation or inside deposits shall be removed.

Example 9.4. (continued).

10. EMERGENCY PROCEDURES

10.1. Emergency Ventilation and Building Containment

10.1.1. References

Reports:

F. T. Binford and T. H. J. Burnett, A Method for the Disposal of Volatile Fission Products from an Accident in the ORR, ORNL-2086 (August 2, 1956).

Drawings:

E 20310 ED 007 D, Rev. 6, Electrical Schematic Containment, Heating and Ventilating, Sheet No. 1

E 20310 ED 008 D, Rev, 1, Electrical Schematic Containment, Heating and Ventilating, Sheet No. 2

H 20462 EG 001 D, Rev. 2, Exhaust System for Containment Plan, Section and General Notes

H 20310 EG 005 D, Exhaust System for Containment and Connection at Building - Plan and Details

H 20310 EG 006 D, Exhaust System for Containment - Details and Alteration to Exhaust Duct at Building 3005

H 20310 EG 007 E, Containment Pneumatic Control System - Schematic

H 20310 EG 008 D, Pneumatic Control System - Piping Sheet No. 1

H 20310 EG 023 D, Pneumatic Control System - Piping Sheet No. 2

A 20309 EB 005 D, Rev. 1, Containment Area - Plans and Sections

10.1.2. Introduction

To safeguard personnel and the property surrounding a reactor complex against radioactive contamination resulting from an incident occurring within the reactor building, the practice at ORNL has been to place a reactor building in containment when a potentially hazardous condition arises. (Containment is that condition when all air exhausted from the building leaves via a ventilation system which contains appropriate filter media and all air entering the building is through leakage paths. In addition, all air-conditioning units, auxiliary ventilation systems, and exhauster units are shut down and all related louvers and dampers are closed.) This method of containment is used at the 2-MW BSR (see Section 7.2 for details on filtering specifications and requirements).

10.1.3. Description

Refer to Section 7.2.3 for a detailed description of the system.

10.1.4. Controls for building containment

The building can be placed in containment either manually or automatically as indicated below:

1. Manual operation is effected by:
   a. Turning the "test-normal" switch (located on the west wall of the control room) to TEST (see Fig. 10.1).
   b. Depressing the black-colored button on the ORR console (remote operation of BSR).

ORNL PHOTO 3793-82

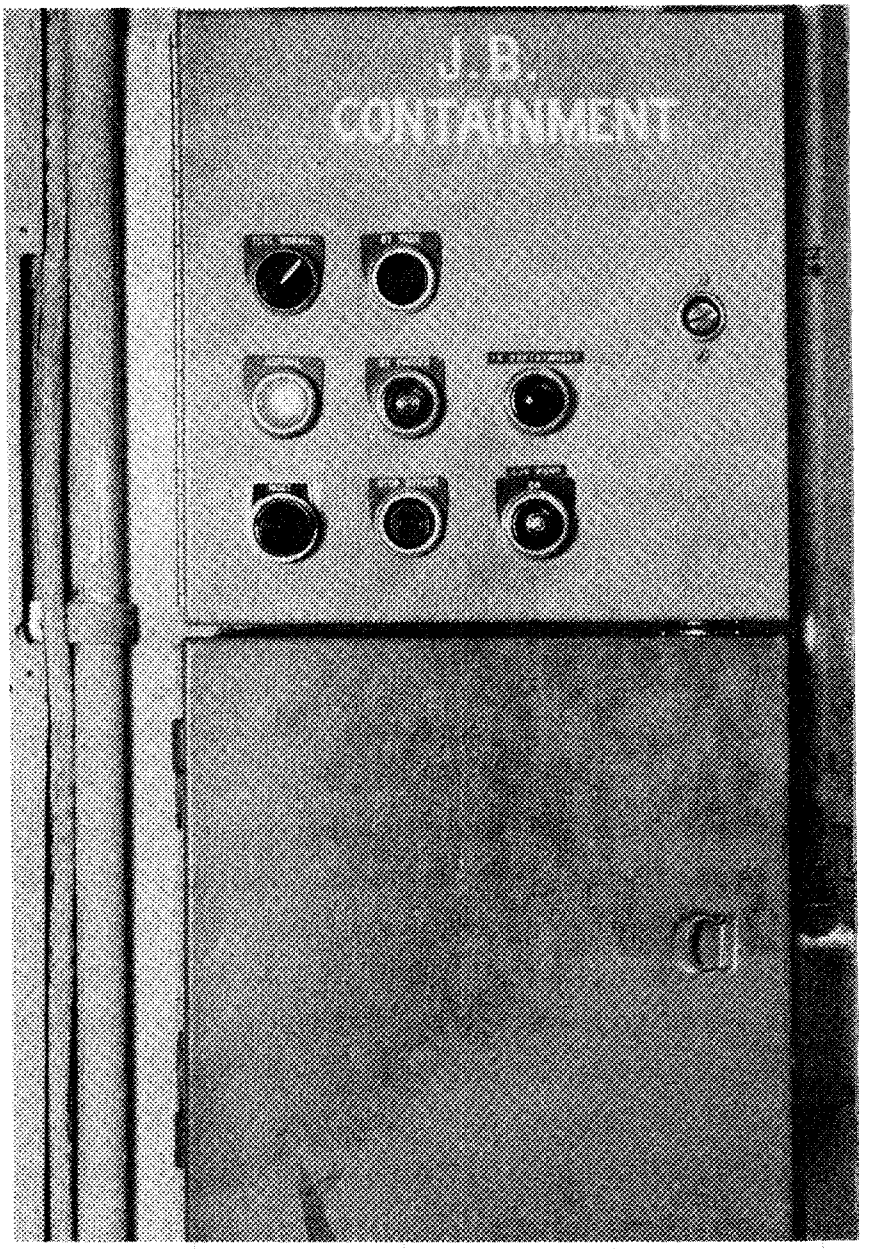

Fig. 10.1. Controls for building containment.

2. Automatic containment occurs ("test-normal" switch in NORMAL) when any one of the following conditions develops:
   a. Two monitrons in the coincidence circuit of the facility radiation and containment alarm system simultaneously indicate an increase in the radiation level to 23 mr/h or when two continuous air monitors in the coincidence circuit indicate an increase in air activity to 4000 counts/min.
   b. The high-bay radiation monitor indicates an increase in the radiation level to 110 mr/h.
   c. The radiation monitor located in the duct (outside of building) indicates an increase in radiation level to 10 mr/h.

The "test-normal" switch should remain in NORMAL during normal operation. Since it is conceivable that situations could develop making containment desirable with the air-conditioning units that service the offices remaining in service, there are certain by-pass features incorporated in the design of this system. For example, if it is anticipated that the scheduled handling of a radioactive source will initiate containment, it would be desirable not only to "disable" the building evacuation features of the radiation monitoring system (see Section 3.5.1, Example 3.1), but also to allow the air-conditioning units in the office to remain in service. The latter may be accomplished by depressing the "by-pass" button on the control box. (It should be noted that depressing the "by-pass" button before containment is

attained will result in immediate by-pass action; if it is depressed after containment is attained, there will be a 3-min delay before the air-conditioning units are re-energized.)

In order to return the building to normal status, the "reset" button may be depressed and all Building 3010 air-conditioning units and exhauster units will be restarted after a 3-min delay. The louvers for the exhauster units will also be reopened.

10.1.5. Normal operations - procedures

As part of the requirements for operating the reactor, the containment system must be functioning as designed. To acknowledge this requirement on the reactor start-up check-list, do the following:

1. Observe the control box, located on the west wall of the control room, for the conditions listed below:
   a. The "test-normal" switch should be in the NORMAL position.
   b. The "normal" light below the "test-normal" switch should be ON; the two lights to the right should be OFF.
2. Observe the readout for the cell-ventilation flow meter. The flow should be approximately 4500 cfm.
3. Check the continuous air monitor readouts in the pool area. Contamination levels should be normal.
4. Observe the monitors; the "power on" lights should be ON.

5. Observe the facility radiation and contamination alarm system panel in the control room for any abnormal conditions (radiation levels higher than they should be, nitrogen pressure low for the gas-operated horns, inoperative lights, key switch not in NORMAL, etc.).
6. Observe the electrometer for the high-bay radiation monitor; the "power on" lights should be ON.
7. Observe the electrometer for the radiation monitor in the cell-ventilation duct; the "power on" light should be ON.

If the building is placed in containment, either manually or automatically, the "normal" lights on the control box (located on the west wall of the control room) will go out and the "in containment" light will come on. The building air-conditioning units in the building will be shut down, and the flow rate through the cell-ventilation system will remain approximately 4500 cfm.

Since there is no audio alarm calling attention to the fact that the building was placed in containment, a malfunctioning instrument may have initiated the action. If this is the case, the electrometers should be checked for possible abnormalities, such as gauge indicators spiking upscale intermittently. The area should also be checked for possible abnormalities.

If no adverse conditions exist, take the building out of containment and reset the instrumentation by depressing the "reset" button on the control box. This will automatically energize the air-conditioning units after a 3-min delay.

If a hazardous condition has developed, the radiation and contamination alarm system instrumentation will, in all probability, be the first to initiate the containment. In this case, there would be audio alarms from the individual radiation monitors, the control room annunciators, and the evacuation horns. The action to be taken is as follows:

1. Scram the reactors.
2. Evacuate personnel from the building (refer to the evacuation procedures applicable to this reactor complex, Section 10.6).
3. With the assistance of Health Physicists, evaluate the nature and seriousness of the incident if and when practical.
4. Notify the reactor supervisor and Reactor Operations Section Head of the status as soon as possible.

When the conditions are again favorable to allow re-entry into the building (radiation levels normal, no areas contaminated above tolerance), take the building out of containment by depressing the "reset" button.

10.2. Emergency Electrical Power

10.2.1. References

Drawings:

RC 15-1-15, Rev. 10, Power Distribution Single Line Diagram

I 20310 QE 006 D-C, Rev. 1, Schematic Diagram

E 20393 ED 043 D, 480-Volt, 3 Ø Emergency Service for 3010 Building

E 20311 ED 001 D, Rev. 3, Electrical One Line Diagram - Bulk Shielding Facility

NOTE: IT IS READILY APPARENT THAT IT IS IMPORTANT THAT THE DIESEL GENERATOR BE AVAILABLE AND OPERABLE AT ALL TIMES; HOWEVER, IT IS NOT REQUIRED FOR SHUTDOWN COOLING. BATTERY-OPERATED EMERGENCY LIGHTS ARE PROVIDED AND OTHER BATTERY-POWERED EQUIPMENT WILL BE UTILIZED DURING PRE-PLANNED DIESEL OUTAGES. PORTABLE GASOLINE DRIVEN GENERATORS ARE ALSO AVAILABLE AT ORNL AND WILL BE UTILIZED AS NEEDED.

10.2.2. Introduction

In the event there is an interruption of TVA electrical power to the BSR, emergency electrical power from the ORR diesel-generator unit will be supplied to most of the components in the reactor's instrumentation and control systems and to a number of auxiliary systems. Actually, the reactor could be operated at a power level of 1 MW with all required components operating on electrical power supplied by the diesel generator; however, it is doubtful that the reactor will ever be operated in this fashion (see Fig. 10.2 for emergency power distribution).

10.2.3. Description

Emergency electrical power is supplied to the BSR by a 350-kW, 410-V, 3-phase, 60-cycle diesel generator which also supplies emergency electrical power to the ORR. The diesel will start immediately when the line voltage drops to approximately 70% of normal; however, a time delay of 7 to 10 s is

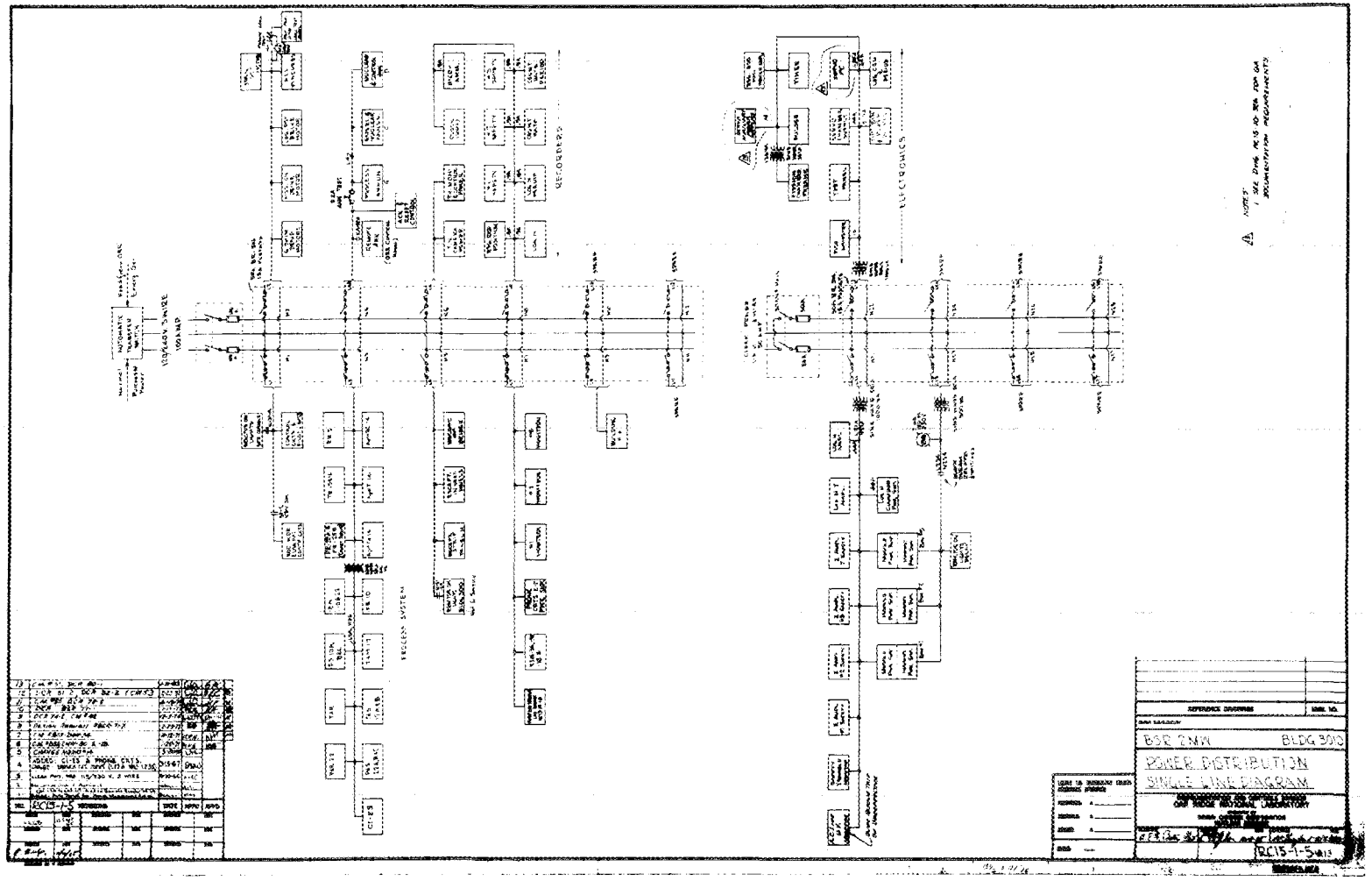

Fig. 10.2. Emergency power distribution.

experienced before the generator carries the full load. The diesel engine is started by 32-V dc motors. When normal TVA power is returned to approximately 90% of normal, the automatic transfer switch automatically returns power to the TVA supply (after about 30 s).

The emergency generator supplies electrical power (120/240 V, 100 A) to the following:

1. All the control circuits and pilot lights.
2. All the nuclear instrumentation.
3. All the process instrumentation.
4. The television monitoring system.
5. The public-address system.
6. The facility radiation and contamination alarm system.
7. The communications system.
8. The electrical receptacles on the bridge and in the vertical panels in the control room and the strip in panel H (also in the control room).

The annunciation of the diesel is located in the ORR control room; this consists of seven lights (mounted below the "emergency services" sign) and an audio alarm (the acknowledge button is at the rear of the panel). These lights, listed below, will brighten under the following circumstances:

1. Generator running. There has been either an interruption in TVA power to one of the above-mentioned facilities and the diesel has begun to operate automatically or the diesel has been started manually using the local controls.

2. Low oil pressure or high water temperature. The diesel oil pressure is low or the water temperature is greater than 208°F.
3. Malfunction of battery charger or charger-to-battery breaker open.
4. Building 3042. TVA power interruption or low voltage to the ORR building.
5. Building 3010. TVA power interruption or low voltage to the BSR building.
6. PWR. Not is use.
7. Building 3003. TVA power interruption or low voltage.

The local controls for the diesel generator are located on the north wall of the diesel room. The controls are secured inside a locked Plexiglas box.

10.2.4. Operational procedures

If TVA power is interrupted to the BSR while the reactor is operating, the operating crew should check to see that the reactor has been shut down, that the seat lights are on, and that no abnormal condition is indicated by the control room instrumentation.

After the TVA power is restored, the following actions should be taken:

1. Check the experiment notebook for any special startup instructions.
2. Return the reactor to the desired operating level in accordance with the requirements specified in Section 2.1.8, "Return to Full Power Following an Electrical Power Outage."

3. When operating conditions have returned to normal, return the diesel generator to standby status as follows:
   a. Place the local control switch in the EMERGENCY STOP position.
   b. As soon as the engine has stopped, return the switch to the AUTOMATIC position so the diesel generator will be ready for the next emergency.
   c. Lock the local control panel.
4. Reset the building containment.
5. Start the skimmer pump.
6. Start the demineralizer pump.

(Reiterating, the required complement of startup instruments do operate on emergency electrical power; hence, the reactor could be operated at a power level of 1 MW. However, unless there are some special circumstances requiring operation of this nature, the reactor should remain shut down until TVA power is available.)

10.2.5. Reliability checks

The diesel-driven generator is tested weekly by personnel of the Plant and Equipment Division to ensure starting reliability, and checks are made on critical components of the system, e.g., cooling system, oil system, ignition system, etc. The test consists of switching the toggle switch, located at the automatic transfer switch box at the ORR, from NORMAL to the TEST position. This action starts the diesel-driven generator. The toggle switch is then returned to the NORMAL position. After the diesel-generator has operated for 1 hr,

the test is terminated by turning the switch on the control panel located on the north wall of the diesel-generator room from AUTOMATIC to EMERGENCY STOP. After the diesel has stopped, the switch must be returned to the AUTOMATIC position.

In addition to the weekly "start" runs, a longer performance run is made during each of the ORR end-of-cycle shutdowns. The purpose is to determine the reliability under emergency load conditions and to check the system for any malfunctioning components.

Routine shift checks are made to ensure that the system is ready for an emergency. These checks consist of checking that the transfer box mode-switch is in NORMAL, that the control mode is in AUTOMATIC, and that the fuel valve on the top of the diesel engine is in its proper aspect.

Periodically, usually once per quarter, the BSR is to be put under emergency electrical load conditions as outlined in Example 10.1.

Example 10.1.

Date _____

Shift _____

BSR Emergency Electrical Power Quarterly Test

Initials

_____ 1. Reactor not operating.

_____ 2. Notify the Guard Department that the test is to be performed. Turn the FRCAS to "disable." Close the valve on the evacuation horn gas cylinder.

_____ 3. Notify the active experimenters that the test is to be performed.

_____ 4. Notify the ORR that the BSR test is to be performed: control desk operator, day supervisor, and shift supervisor.

_____ 5. Announce over the BSR PA system that the test is to be performed which affects circuits in the control and pool rooms (the building will go into containment when the emergency transfer switch is turned off under Item 6 along with alarms from the FRCAS).

_____ 6. Turn circuit No. 18 (emergency tranfer switch) in electrical panel DP-1 to "off." After a time delay of approximately 7 to 10 s, the diesel generator should furnish electrical power to circuits as listed under Item 7. Enter the time that the switch was turned to "off" _____.

_____ 7. Check that emergency electrical power is supplied to the following:

_____ a. Control circuits and pilot lights.

_____ b. Nuclear instrumentation.

_____ c. Process instrumentation.

_____ d. Television monitoring system.

_____ e. Public-address system.

_____ f. FRCAS.

_____ g. Communication system.

_____ h. Electrical receptacles on the bridge, in the vertical panels in the control room, and the strip on panel H in the control room.

_____ 8. After the test has been completed (approximately 5 to 10 min on the emergency generator) terminate the test as follows:

_____ a. Turn circuit No. 18 (emergency transfer switch) in electrical panel DP-1 to "on." This will return the BSR to TVA power. Enter the time that the switch was turned to "on" _____.

_____ b. Stop the diesel operation by turning the "automatic-emergency stop switch" to the emergency stop position. After the diesel stops, return the switch in the automatic position.

_____ c. Notify the ORR shift supervisor that the test is completed.

_____ d. Notify the Guard Department that the test is completed. Turn the FRCAS to the normal condition. Valve in the horn gas-supply cylinder.

_____ e. Take the building out of containment by pushing the reset button.

_____ f. Check that TVA electrical power is returned to all the systems listed under Item 7.

_____ 9. Remarks (comments on test):

Supervisor _____

10.3. Emergency Shielding for the Reactor Pool

10.3.1. Introduction

Loss of water from the reactor pool by way of a leak in the pool wall or in the piping could result in dangerously high radiation levels in the bay area. Consequently, provisions have been made for manually adding either demineralized water or process water, or both, thereby maintaining the pool water at a level sufficient to provide emergency shielding.

10.3.2. Operational procedures

If adverse conditions due to loss of water are imminent, the following steps should be taken:

1. Shut down the reactor if it is operating.
2. Add water from the 9000-gal demineralized water storage tank in Building 3004. This is accomplished by opening valve C-1 located on the west side wall adjacent to the pool.
3. Immediately initiate efforts toward ascertaining the cause of the leak.
4. If the demineralized water supply is not adequate to compensate for the losses, allow process water to enter the pool. This is accomplished by opening the valve labeled "process water valve" (this is also located at the west-side parapet, over the pool).

The demineralized water is, of course, preferable if the leak is not substantial; however, if the loss in pool water continues, process water should be used to minimize any potential radiation hazard.

10.4. Emergency Cooling

No forced cooling is required to remove the afterheat in the core following 2-MW operation. In the event the cooling system fails while the reactor is being operated, the reactor would be scrammed automatically. (The flapper valve may be opened following a reactor shutdown to improve natural convection cooling; however, this is not a necessity.)

10.5. Emergency Services

10.5.1. Introduction

When an emergency occurs, the person discovering the emergency is responsible for taking immediate action to protect personnel and property and bringing the emergency under control. This applies to fire, radiation, explosions, personal injury, or any other emergency and should be accomplished by one or more of the following methods:

1. Control the emergency single-handedly, if possible.
2. Telephone 911 (Emergency Control Center) for help.
3. Actuate the nearest fire-alarm box.
4. Call the local emergency supervisor.
5. Call a local emergency squad member or anyone near.
6. Sound the building evacuation alarm, if necessary.
7. Meet and orient the emergency units.

When a call is received by the Emergency Control Center at 911, the dispatcher immediately notifies the Laboratory Shift Supervisor and dispatches the emergency service units needed (fire, guard, etc.).

10.5.2. Fire Department

The Fire Department contains two sections - a fire-fighting section and a building-inspection section. The fire-fighting group is available at all times; the building-inspection group is available on the regular 8:00-4:30 shift.

The inspection group makes periodic inspections of Building 3010 and reports fire hazards to the building supervisor. Reactor Operations personnel can aid in fire prevention by reporting fire hazards to either the shift supervisor or the Fire Department Inspection Group.

A fire may be reported to the Fire Department by telephone (call 911) or by actuating the nearest fire-alarm box. If the telephone is used, the caller should state his name and badge number as well as his location and the type of fire. In either case, the person should remain in the area and direct Fire Department personnel to the fire.

Immediately after a fire extinguisher is used, a call should be made to the fire captain on duty, reporting the use of the fire extinguisher and the nature of the emergency. This will ensure that the fire extinguisher will be refilled and placed back in service for future emergencies.

Personnel of the Fire Department are equipped and trained to administer first aid.

Rules for fire fighting are:

1. Put out a small fire if you are sure you can, then call the Fire Department by phone.
2. Report all other fires to the Fire Department at once and sound the necessary alarm.
3. Direct the Fire Department to the scene.

10.5.3. Guard Department

The Guard Department Headquarters is located in Building 2500. The main function of this department is plant security; however, many other services are performed by the department personnel. Plant employees can aid the guards in the performance of their duties by properly wearing the picture film badge and observing plant rules. The badge should be worn on the left side in the shirt-pocket area.

The Guard Department works in conjunction with the Fire Department on fire alarms. Both departments have identical alarm code systems. Upon receiving a fire alarm by phone or fire-alarm box, the Fire Department dispatcher will accompany the fire trucks to the emergency and the Guard Department dispatcher will operate the alarm code system until the fire dispatcher's return. Designated guards on all shifts are trained as auxiliary firemen. These men also have been trained in first aid.

The plant ambulance is operated by guards. In an incident in which ambulance service is needed, a phone call should be made to the Emergency Control Center, phone 911. The ambulance driver will stop at the dispensary, and a nurse and/or doctor will accompany the driver to the emergency.

10.5.4. Industrial Safety and Applied Health Physics

The Industrial Safety and Applied Health Physics Division has offices and personnel in Buildings 3001 and 3042 on the day shift, Monday through Friday. On the 4 to 12 and 12 to 8 shifts, holidays, and weekends, the Industrial Safety and Applied Health Physics office is located near the west plant

portal, Building 2016. At least two Health Physicists are on duty during each shift. If the Health Physicist cannot be located in his office, he can be paged by calling the Guard Department dispatcher (4-6646).

All calls to the Guard and/or Fire Department include an almost simultaneous summons of the Health Physicist, who must monitor the area for any radiation or contamination hazards.

10.5.5. Dispensary

The Health Division's main dispensary is located in Building 4500, Wing 5. The division is staffed with doctors and nurses. There is a nurse on duty from 7:00 AM to 6:00 PM and a doctor on duty from 8:00 AM to 4:30 PM Monday through Friday. A doctor is on call 24 h a day.

Services of the dispensary can be received at any time; however, an appointment must be made to obtain a doctor's services, except in case of an emergency. In case of an injury, regardless of how slight, the employee must report to the Health Division for treatment.

10.5.6. Maintenance

For emergency maintenance, arrangements may be made for immediate repairs by each reactor supervisor. For emergency maintenance during hours other than the normal 8:00 to 4:30 week days, the Laboratory Shift Supervisor will be notified of the situation, and he will make the necessary arrangements for calling in the proper personnel.

NOTE: If either the air-horn or public-address building evacuation system fails, it must be repaired promptly; because failure of the second before repairs are made to the one already out of service requires that the building be evacuated until repairs can be made.

10.5.7. Accidents

Any injured employee requiring assistance and dispatched to Medical in other than the ambulance is to be escorted. It is the reponsibility of the escort to see that the dispensary medical staff is immediately made aware of the injured employee's presence and to provide Medical with pertinent information about the accident, such as the involvement of chemicals, radiation, etc. It is the responsibility of building supervision to ensure that an individual is delegated the responsibility for meeting emergency assistance units responding to requests for assistance. The Laboratory Shift Supervisor acting as the Laboratory Emergency Director is in charge of all emergency efforts.

10.6. Evacuation Procedures

10.6.1. Emergency personnel

1. Building 3001

a. Local emergency supervisor	ORR Supervisor
b. Warden	Operations Shift Supervisor
c. Searchers	Reactor Operators

2. Building 3004 and 3005

a. Local emergency supervisor	ORR Supervisor
b. Warden	Operations Shift Supervisor
c. Searchers	Reactor Operators

3. Building 3010

a. Local emergency supervisor	BSR Supervisor
b. Warden	Operations Shift Supervisor
c. Searchers	Reactor Operators

4. Building 3042

a. Local emergency supervisor	ORR Supervisor
b. Warden	Operations Shift Supervisor
c. Searchers	Reactor Operators

In the absence of the designated individual listed above, the duties described in this section will devolve to the next individual in the line organization. In the event this individual is the Operations Shift Supervisor, he will discharge the duties of this position (in addition to those of warden) until relieved by higher authority.

10.6.2. Responsibilities of emergency personnel[1]

An emergency squad consists of a local emergency supervisor, wardens, searchers, and other squad members. The responsibilities of each are outlined below:

1. The local emergency supervisor
   a. Organizes and trains the local emergency squad and plans for its use in handling the various types of anticipated emergencies always ensuring that the local plans are consistent with the overall Laboratory plans.
   b. In the event of a local emergency, directs his squad and ensures that:
      (1) Personnel have been evacuated from the affected area.
      (2) The Emergency Control Center has been notified.
      (3) Emergency service units are met, briefed on the situation, and directed to the scene.
      (4) Equipment and processes are shut down as necessary for safety.
      (5) The Laboratory emergency director is kept advised of the status of the emergency and of any needed assistance.
      (6) Additional manpower is secured if needed.

[1] ORNL Emergency Manual, 1961.

c. In the event of a Laboratory-wide emergency, complying with the instructions of the Laboratory Director, which may include:

(1) Evacuation of personnel.

(2) Shutting down of process and building equipment.

(3) Assembling his local emergency squad and dispatching it as directed.

2. The wardens

a. Sound the local evacuation alarm.

b. Direct employees from the emergency area to the local assembly point.

c. Prevent re-entry.

d. Check the safety of the assembly point and move it if necessary.

e. Account for all employees in their area after an evacuation.

f. Have employees monitored for radioactivity, if the need is indicated, before dismissing them.

g. Direct employees to other assembly points as instructed over the public-address system.

3. The searchers

a. Search all areas of the building to make sure all employees have evacuated.

b. Assist the wardens.

4. Other squad members

a. Notify or summon assistance from the proper emergency service unit.

b. Meet and orient the emergency service unit when it arrives.

c. Make the necessary operational changes.

d. Combat the emergency as required.

10.6.3. Laboratory emergency signals

1. General alert signal. On a general alert, the signal will come from the fire-alarm system. This will be in the form of Box 14 sounded four times followed by the fire alarm box nearest the location affected. (This signal is sounded for second alarm fires as well as general alert conditions.)

2. Laboratory evacuation signal. On a Laboratory evacuation, the signal will be a 30-s warbling siren-like wail over the Laboratory-wide Bell Telephone public-address system, followed by verbal instructions.

3. Other signals. Other emergency signals are transmitted via the fire-alarm system; however, only two of these might involve Reactor Operations Section personnel. Box 11 sounded four times signifies an "all clear" condition. Box 12 sounded one time signifies that a "box test" is being conducted.

10.6.4. Laboratory evacuation (emergency outside the reactor area)

If an emergency requiring a plant-wide evacuation occurs outside the Reactor Operations Section area, personnel will be notified as indicated in Section 10.6.3, above. The following action will be taken:

1. Operations personnel (either the warden or local emergency supervisor) will:
   a. Cause the reactor(s) to be scrammed (if it is operating).
   b. Determine that the situation is reported to all building occupants over the public-address system.
   c. Initiate a building evacuation.
   d. Select deputy searchers, if required, from the Reactor Operations Section personnel in the area assembly point (on Reactor Drive between Buildings 3001 and 3042).
   e. Dismiss all other section personnel and direct them to evacuate the Laboratory.
   f. After assessing the situation, the building may be séarched for people who have not exited.
2. <u>Operations personnel (general)</u>
   a. Leave the building via the most convenient exit. (If a section member is in, or adjacent to, a reactor control room at the time the evacuation is initiated, he should take the emergency package with him when he leaves the building.)
   b. Assemble at the section area assembly point (on Reactor Drive between Buildings 3001 and 3042 for possible selection as a deputy searcher).
   c. Comply with instructions from local emergency personnel.

3. Other personnel in a Reactor Operations Section building:
   a. Leave the building immediately via the most convenient exit.
   b. Proceed to the nearest exit from the Laboratory unless otherwise directed via the Laboratory-wide public-address system.

10.6.5. Local area evacuation (emergency outside the section area)

If an emergency requiring a local area evacuation occurs outside the Reactor Operations Section area, the local emergency supervisor (or warden) will be notified by the Laboratory emergency director or by other responsibile departments. (This notification may be received initially by the reactor control desk operator who will immediately contact the responsible local emergency supervisor or warden.)

1. Operations personnel (either the warden or local emergency supervisor, for each building) will:
   a. Cause the reactor(s) to be scrammed (if it is operating).
   b. Determine that the situation is reported to all building occupants over the public-address system.
   c. Initiate a building evacuation.
   d. Assemble his local emergency squad and all building occupants at the local assembly point. Determine that the assembly point is in a safe area. Move to a secondary assembly point, if necessary.

e. Appoint a squad member as temporary warden. Go to the section area assembly point (on Reactor Drive between Buildings 3001 and 3042) and select deputy searchers, if required, from the Reactor Operations Section personnel who have assembled there.

f. Dismiss all section personnel not selected and direct them to evacuate the area and wait for further instructions via the Laboratory-wide public-address system.

g. After assessing the situation, the building may be searched for people who have not exited.

h. Wait for further instructions from the Laboratory emergency director via the Laboratory-wide public-address system.

2. Operations personnel (general)

a. Leave the building via the most convenient exit. (If a department member is in, or adjacent to, a reactor control room at the time the evacuation is initiated, he should take the emergency package with him when he leaves the building.

b. Assemble at the local assembly point for possible selection as a deputy searcher.

c. Those individuals not selected should report to to the section assembly point for possible service at the other reactors.

d. Comply with instructions from local emergency personnel.

e. Wait for further instructions from the Laboratory emergency director via the Laboratory-wide public-address system.

3. Other personnel in a section building

a. Leave the building immediately via the most convenient exit.

b. Assemble at the local assembly point.

c. Comply with instructions from local emergency personnel.

d. Wait for further instructions from the Laboratory emergency director via the Laboratory-wide public-address system.

Since conditions associated with an emergency outside the reactor buildings may vary considerably, the instructions one would be advised to follow may vary accordingly. It is conceivable that under certain circumstances the instructions in this section, pertaining to building evacuation, perhaps would not be the wisest to follow. An example of this would be an occurrence of an incident in another part of the Laboratory in which airborne activity released into the atmosphere would present a potential health hazard to personnel inside the reactor buildings (by virtue of the negative pressure inside of the buildings) but would present a greater hazard if the personnel were to leave the buildings.

In a case such as this, the local emergency supervisor (or warden) would have received information of the incident from the Laboratory emergency director. At this time, the local emergency supervisor (or warden) for each building should perform the following in the order listed.

1. Cause the reactor(s) to be scrammed (if it is operating).
2. Announce over the building public-address system: "Attention! All personnel remain inside the building until further notice. The outside air has become slightly contaminated as result of an incident in another area. Personnel in the immediate area who are outside the containment volume are advised to enter."
3. Monitor the building continuous air monitors frequently.

When the condition of the outside air is no longer considered to represent a hazard (as determined by the Laboratory emergency director), the information should be announced over the building's public-address system and normal operations should be resumed as soon as possible.

10.6.6. Building evacuation - emergency in Building 3001

The ORNL Graphite Reactor (OGR) Building now has two distinct areas: (1) in-plant area - that portion of the building which is not accessible to the public; and (2) visitors area - that portion which is allocated for public access during specified hours and is separated from the controlled plant area by a security fence, gates, and doors. The evacuation procedure for each area follows.

1. In-plant area. Contamination and radiation detection instruments are provided to monitor this area and their outputs are received by a central station located on the first level of this building. If the background increases above pre-selected setpoints, a local alarm will sound at the detecting instrument and a buzzer will sound at the central panel. Since the signal of this central panel is telemetered to the ORR control room, the operator in the ORR control room is informed by an audible and visual signal. He will immediately notify his supervisor who will evaluate the conditions. The need for an evacuation could be the result of an emergency in Buildings 3005, 3010, 3042, or within 3001. The supervisor will make the evaluation and, if a building evacuation is necessary, he will inform the building occupants with an announcement on the ORR-BSR-complex public-address system.

   The local emergency supervisor, or anyone directed by him, follows these general rules.

   a. The situation or conditions will be announced over the public-address system. This announcement will help to make it possible for others to assist in combating the emergency.

   b. The Emergency Control Center, phone 911, should be notified of the cause and magnitude of the emergency.

c. Re-entry of the building by searchers or other personnel (for radiation surveys, etc.) will be directed by the local emergency supervisor if safe and/or necessary; such re-entry will, whenever possible, follow the Health Physics procedures and recommendations.

The local emergency supervisor will combat the emergency until relieved by higher authority.

2. Visitor area. The same instrumentation as used in the "in-plant area" as described above for detecting abnormal conditions monitors this area also. The local emergency supervisor has the responsibility for this area and the special emergency procedure should be followed.

A portion of the ORNL Graphite Reactor (OGR), now a National Historic Landmark, has been opened to the public and connected to a special visitors' parking lot on the north side of the Laboratory by a fenced walkway. This allows the general public to visit the OGR during certain hours without passes or advance notice. The OGR is near the ORR and the Pilot Plant as well as other process buildings of the Laboratory. The following procedure will be used for evacuating OGR visitors if any emergency elsewhere in the Laboratory should make this desirable.

1. Responsibility. The operating crew at the ORR will be responsible for evacuating the visitors from the area. The two general categories of occurrences that might require evacuation of the OGR are:

a. a major incident at the ORR; and

b. a major incident elsewhere in the Laboratory which would require evacuation of the area including the Graphite Reactor.

In the first type of incident, the shift supervisor will make the decision to evacuate the OGR. If an evacuation is necessary due to an incident in another part of the Laboratory, the decision will be made at the Emergency Control Center and the shift supervisor will recieve instructions accordingly. When the decision to evacuate the people from the visitors' access area is made, a decision must also be made as to which route to take - north via the pathway by which the visitors entered or south through the Laboratory.

2. Procedure. Since an evacuation could occur on a holiday or weekend, the crew on duty at the ORR area might consist of three people: the shift supervisor and two reactor operators.

   a. Evacuation Southward. If it is necessary for the visitors to go south through the Laboratory, two men will enter Building 3001 through the east door and pass through the emergency door on the right into the public area. This door is equipped with a panic bar on the public-area side and with a switch to initiate an alarm at Guard Headquarters when the door is opened. Also, the Guard Department has placed an official seal on the door so that visual inspection will reveal

whether it has been opened. One of the two men will go northward along the fenced walkway to the parking lot, directing any visitors along the pathway to return to the north parking lot. He will close the gate and do whatever is necessary for the safety of the group, including having checks made by an Industrial Safety and Applied Health Physics surveyor if this seems desirable. The other man will direct all visitors in the building through the emergency exit as rapidly as possible. He will accompany the group to one of the Laboratory gates where he will determine whether a Health Physics survey should be made. He will attempt to obtain transportation to the north parking lot where the visitors' cars will be parked and do whatever is possible for their safety and comfort. The Emergency Control Center should be notified of the completion of the evacuation and asked for further instructions. If any problem should arise requiring additional assistance, the Emergency Control Center should be called immediately.

b. Evacuation Northward. If the decision is to evacuate northward, one man (usually a reactor operator) will enter the visitor area by the route noted above and evacuate all visitors from the building as quickly as possible via the access pathway. As the visitors leave, the operator

should follow them, giving any assistance that is needed. When this group leaves the north gate, the operator will close the gate and do whatever is necessary for the safety of the group. If radiation and contamination conditions are suspected, the visiors should be instructed to remain at the gate until a Health Physics surveyor can be called to check for possible contamination. The Emergency Control Center should be notified of the completion of the evacuation and asked for further instructions. If any problem should arise requiring additional assistance, the Emergency Control Center should be called immediately.

10.6.7. Building evacuation - emergency in Buildings 3004 and 3005

Emergency evacuations of Buildings 3004 and 3005 are initiated by personnel in the ORR (Building 3042) or BSR (Building 3010) by using the public-address system in the ORR and/or BSR.

Since the LITR has been decommissioned and the fuel and experiments have been removed, the possibility of a radioactive release is reduced essentially to nil. The general area is monitored by selectively-placed radiation detecting instruments which are equipped with a local alarm only. Routine patrol checks through the area are made by each shift. An abnormal condition requiring an evacuation would be detected during these checks.

1. Upon receipt of information regarding an emergency condition which warrants an evacuation, the local emergency supervisor or his alternate will, if time permits, announce the condition over the public-address system.
2. The local emergency supervisor or his alternate will notify the Emergency Control Center (phone 911) of the emergency condition (if this has not been done previously). In case of fire, he will actuate the nearest fire-alarm box.
3. The local emergency supervisor or his alternate will continue to combat the emergency.
4. If the local emergency supervisor deems it necessary, he will initiate the evacuation plan for Buildings 3001, 3010, and 3042.
5. For a more serious emergency, the local emergency supervisor or his alternate will recommend to the Emergency Control Center that the entire Laboratory be evacuated. If such be the case, further instructions will be announced over the plant-wide public-address system.

Conditions in other buildings in the ORR-BSR complex could be a cause for emergency evacuation of these buildings. Applicable procedures for situations of this nature are provided elsewhere in this section.

10.6.8. Building evacuation - emergency in Building 3010

Emergency evacuations of Building 3010, for the purpose of this procedure, are divided into two classes. Class one evacuations are any evacuations automatically started by instrumentation. Class two evacuations are evacuations initiated manually.

It may be necessary, for either class of evacuation, to direct the initial actions from the ORR Control Room (remote BSR console). The local emergency supervisor or the warden shall, regardless of his location, follow the same guidelines in directing the evacuation and in any event should be guided by radiation levels as measured by the high bay radiation monitor (alarm at 110 mr/h) and the log-gamma monitor (alarm at 5 r/h). These instruments are indicated in both the local and remote control rooms, and the sensors are located on the wall outside the BSR control room door.

It should be emphasized that immediate evacuation of the local control room may not be at all necessary, since radiation and/or contamination may be limited to the high bay area of Building 3010. The local emergency supervisor or the warden, when in the local control room, should be guided in their actions by the control room constant air monitor, as well as the building radiation monitor and the log-gamma monitor described above.

The suggested course of action for the local emergency supervisor (or warden) is given below. The reader should understand that it is not possible to provide a procedure that will apply in full for every condition which could arise. Rather, sound guidelines based on experience are provided. The proper execution of emergency procedures under actual conditions rests with well-trained and experienced personnel.

1. Class one evacuation, instrument initiated. An instrument-initiated (automatic) evacuation may be caused by: high air-activity indications at two continuous air monitors in the air contamination coincidence circuit, or high radiation indications at two

of the monitrons in the monitron coincidence circuit. Building containment is also automatically effected under these conditions.[1]

If the evacuation signal is initiated automatically, a sudden increase in the air activity or radiation background within the building would be suspected since a gradual increase would usually have been detected by various low-level monitors and would have prompted a manually initiated evacuation. The following steps are suggested.

[NOTE: It is assumed that all personnel will evacuate the Building 3010 high bay area (containment shell) upon actuation of the evacuation signal. The local emergency supervisor may elect to evacuate to the control room if his position within the high bay is favorable.]

a. Shut down the BSR and PCA (if either is operating).

b. If time permits, the situation or conditions should be announced over the public-address system while depressing the silence button for the evacuation horn. This announcement will help to make it possible for others to assist in combating the emergency.

---

[1] J. A. Russell, Jr., and D. J. Knowles, Description of Facility Radiation and Contamination Alarm Systems Installed in the Bulk Shielding Facility, Building 3010, ORNL-TM-1874 (August 22, 1967).

c. The Emergency Control Center, phone 911, should be notified of the magnitude and cause of the emergency.

d. Re-entry of the containment shell by searchers or other personnel (for radiation surveys, etc.) will be directed by the local emergency supervisor if safe and/or necessary; and such re-entry will, whenever possible, follow the Health Physics procedures and recommendations.

The local emergency supervisor will combat the emergency until relieved by higher authority.

2. Class two evacuations, manually initiated. An emergency condition, other than a suddenly occurring radiation or air-contamination incident, will usually develop at a rate which will permit some pre-evacuation planning, however limited. This type of emergency would include a pending or potential high-radiation or air-contamination level, a fire, or a release of undesirable gas into the building atmosphere.

The local emergency supervisor (or, in his absence, the control-room operator) will generally be forewarned of increasing radiation or air-contamination levels through the radiation and contamination alarm system. The control-room operator will notify the shift supervisor of radiation and/or contamination alarms as they occur.

Automatic early warning regarding fire, gas leaks, or other emergency conditions is not probable; however, such emergency conditions may not require the haste usually associated with an automatically announced radiation or air-contamination incident. It should

be recognized that it is not the intent of this procedure to minimize the hazards associated with fire. Rather, the point to be made is that the fire danger to equipment and materials is much greater than the fire danger to personnel.

a. Upon receipt of information regarding an emergency condition which warrants an evacuation, the local emergency supervisor or his alternate will, if time permits, announce the condition over the public-address system.

b. The local emergency supervisor or his alternate will then actuate the evacuation horn, interrupting the signal after 10 s to announce the condition again and give pertinent directions to evacuating personnel. (Actuation of the evacuation signal places the building in containment.) (NOTE: Steps a and b can be accomplished from the ORR control room as well as from the BSR.)

c. The local emergency supervisor (or the warden) will initiate action to shut down the BSR should he deem such action necessary or helpful toward combating the emergency. (PCA shutdown will be required in any case.)

d. The local emergency supervisor or his alternate will notify the Emergency Control Center (phone 911) of the emergency condition (if this has not been done previously). In case of fire he will actuate the nearest fire-alarm box.

e. The local emergency supervisor or his alternate will continue to combat the emergency.

3. All evacuation, extended conditions

   a. If the local emergency supervisor deems it necessary, he will initiate the evacuation plan for Buildings 3001, 3004, 3005, and 3042.

   b. For a more serious emergency, the local emergency supervisor or his alternate will recommend to the Emergency Control Center that the entire Laboratory be evacuated. If such be the case, then further instructions will be announced over the plant-wide public-address system.

10.6.9. Building evacuation - emergency in Building 3042

Emergency evacuations of Building 3042, for the purpose of this procedure, are divided into two classes. Class one, instrument-initiated evacuation, includes any evacuation automatically started by instrumentation. Class two, manually initiated evacuation, includes evacuation initiated manually from the control room or from the emergency box outside the northwest personnel door.

The suggested course of action for the local emergency supervisor or, in his absence, the control desk operator is given below. The reader should understand that it is not possible to provide a procedure which will apply in full for every condition which could arise. Rather, sound guidelines based on past experience are provided. The proper execution of emergency procedures under actual conditions rests with well-trained and experienced personnel.

1. Class one evacuation, instrument initiated. An instrument-initiated (automatic) evacuation may be caused by: high air-activity indications at two continuous air monitors in the air contamination coincidence circuit, or high radiation indications at two

of the monitrons in the monitron coincidence circuit. Building containment is also automatically effected under these conditions (see Operating Manual for the Oak Ridge Research Reactor, TM-506, Section 9.2, Facility Radiation and Contamination Alarm System, Building 3042). If the evacuation signal is initiated automatically, a sudden increase in the air activity or radiation background within the building would be suspected since a gradual increase would usually have been detected by various low-level monitors and would have prompted a manually initiated evacuation. The following steps are suggested. (NOTE: It is assumed that all personnel will evacuate the Building 3042 containment shell upon actuation of the evacuation signal. The local emergency supervisor may elect to evacuate to the control room if his position within the high bay is favorable.)

a. If the evacuation signal is accompanied by an alarm from the control room high-level radiation monitor (>5 r/h), then the control room operator (warden) should scram the ORR (and any other reactor being operated from this control room) and evacuate the control room, taking the emergency equipment package with him if possible.

b. If the radiation level in the control room is less than 5 r/h, then the local emergency supervisor or, in his absence, the control room operator (warden) should survey the instrumentation to determine:

(1) Radiation and air-contamination levels in the control room (from the control room radiation monitor and continuous air monitor).

(2) The cause of the evacuation signal, i.e., high-level signals from two monitrons or two continuous air monitors or both (from the radiation and contamination alarm system panel).

(3) The condition (radioactivity) of the reactor and pool systems as reflected by the reactor and pool water activity recorders and the ^{16}N recorders.

c. Emergency action to be taken after the above listed information is gathered must be decided upon by the local emergency supervisor or his alternate; however, decisions must be made quickly and, therefore, the following guidelines are offered.

(1) If it is suspected that the operating reactor is contributing to the condition, then the ORR should be shut down.

(2) If time permits, the situation or conditions should be announced over the public-address system while depressing the silence button for the evacuation horns. This announcement will help to make it possible for others to assist in combating the emergency.

(3) The Emergency Control Center, phone 911, should be notified of the magnitude and cause of the emergency.

(4) If radiation or air-contamination levels in the control room are sufficiently high, or are increasing rapidly, the ORR and any other reactor being operated from this control room should be scrammed and the control room evacuated.

(5) If, however, radiation and air-contamination levels in the control room are not excessively high, the local emergency supervisor can use the control room as a base from which to direct action toward correcting the emergency situation.

(6) Re-entry of the containment shell by searchers or other personnel (for radiation surveys, etc.) will be directed by the local emergency supervisor if safe and/or necessary; and such re-entry will, whenever possible, follow Health Physics procedures and recommendations.

d. The local emergency supervisor will combat the emergency until relieved by higher authority.

2. Class two evacuation, manually initiated. An emergency condition, other than a suddenly occurring radiation or air-contamination incident, will usually develop at a rate which will permit some pre-evacuation planning, however limited. This type of emergency would include a pending or potential high-radiation or air-contamination level, a fire, or a release of undesirable gas into the building atmosphere.

The local emergency supervisor (or, in his absence, the control-room operator) will generally be forewarned of increasing radiation or air-contamination levels through the radiation and contamination alarm system. The control-room operator will notify the shift engineer of radiation and/or contamination alarms as they occur.

Automatic early warning regarding fire, gas leaks, or other emergency conditions is not probable; however, such emergency conditions may not require the haste usually associated with an automatically announced radiation or air-contamination incident. It should be recognized that it is not the intent of this procedure to minimize the hazards associated with fire. Rather, the point to be made is that the fire danger to equipment and materials is much greater than the fire danger to personnel.

a. Upon receipt of information regarding an emergency condition which warrants an evacuation, the local emergency supervisor or his alternate will, if time permits, announce the condition over the public-address system.

b. The local emergency supervisor or his alternate will then actuate the evacuation horn, interrupting the signal after 10 s to announce the condition again and give pertinent directions to evacuating personnel. (Actuation of the evacuation signal places the building in containment.)

(NOTE: Steps a and b can be accomplished from the emergency microphone box outside the northwest personnel door.)

c. The local emergency supervisor, or, in his absence, the control desk operator (warden) will shut down the ORR (and any other reactor being operated from this control room) should he deem such action necessary or helpful toward combating the emergency. However, if the situation permits, local operation at the other reactor should be initiated.

d. The local emergency supervisor or his alternate will notify the Emergency Control Center (phone 911) of the emergency condition (if this has not been done previously). In case of fire he will actuate the nearest fire-alarm box.

e. The local emergency supervisor or his alternate will continue to combat the emergency, operating from the control room as long as conditions permit.

3. All evacuation, extended conditions

a. If the local emergency supervisor deems it necessary, he will initiate the evacuation plan for Buildings 3001, 3004, 3005, and 3042.

b. For a more serious emergency, the local emergency supervisor or his alternate will recommend to the Emergency Control Center that the entire Laboratory be evacuated. If such be the case, then further instructions will be announced over the plant-wide public-address system.

10.6.10. Response to air attack warnings

If the Laboratory receives information concerning an air attack of any type, a 30-s, continuous, siren-type sound will be broadcast from the plant-wide public-address system. The Laboratory emergency director will then broadcast on the public-address system any instructions that are necessary for the protection of Laboratory employees.

The directions given will depend upon the situation and will give the individual the option of evacuating the ORNL area or taking cover. In either event, operations at the reactors will cease. The following steps should be taken by each control-desk operator, assuming that each reactor is operating.

1. Cause the reactor(s) to be scrammed.
2. Sound the evacuation horns. The buildings will automatically be placed in the containment mode.
3. Shut down all pumps of the following types:
   a. Reactor secondary water pumps.
   b. Reactor primary water pumps. (Do not shut off any battery-driven motors).
   c. Pool secondary water pumps.
   d. Pool primary water pumps.
4. Shut off all cooling-tower fans.
5. Silence the evacuation horn and make an announcement on the building public-address system concerning the situation.
6. Leave the building or take cover, as is decided at the time.

If employees are instructed to leave the buildings, they should take with them portable, radiation-detection instruments for use in any emergency which may ensue. If the reactor is down at the time of the warning, the work should cease immediately; and the employees should take the indicated steps to preserve their safety.

10.6.11. Evacuation procedure drills

Each crew, while on the 12 to 8 shift, will test one of the emergency procedures. The procedures will be chosen for drill on a rotating basis so that all local emergency personnel remain well trained in their duties.

Laboratory-wide evacuations will be sheduled often enough to keep the remainder of the people acquainted with the procedures.

10.6.12. Maintenance policy for building evacuation equipment

Emergency building evacuation procedures are so important that they have been developed for practically every operating area at ORNL. It has been recognized by the Laboratory that there must always be available some method of quickly informing people in an operating area when a hazard exists so that they can leave.

In work around the reactors at ORNL, it has been found that the public-address system can be used just as effectively as the standard air horns to advise people to evacuate the building. For this reason, the public-address systems for the buildings in the ORR-BSR complex have been connected to the emergency power system in each building. The ORR public-address system has been equipped with dual amplifiers, either of which can drive all of the speakers for the building complex.

Procedures have been set up to test the air-horn evacuation systems in each building; however, the public-address systems are used so frequently for paging that further testing is unnecessary. If either the air-horn or the public-address building-evacuation system fails, it must be repaired promptly; because, if the remaining system should fail before repairs are made, the building must be evacuated until repairs can be completed. This evacuation should be done by Operations personnel who would, by direct conversation, tell each person in the building that he must leave the area.

11. AUXILIARY EQUIPMENT

11.1. Reactor-Bay Crane

11.1.1. Introduction

An overhead crane is provided in the bay area for the moving of heavy objects, such as carriers and various equipment.

11.1.2. Description

The tracks of the bridge run in the north-south direction and are supported by the building structural members. The hoist has a load limit of 15,000 lbs. The travel speed for the crane is as follows:

Direction	Slow travel	Fast travel
Forward	8 in./s	2 ft/s
Reverse	1 ft/s	2 ft/s
Left or right	4 in./s	1 ft 2 in./s
Raise or lower	3 in./s	4 in./s

11.1.3. Responsibility

Each supervisor in charge at the BSR is responsible for the proper use of the crane. He should be assured that only competent personnel operate the crane and that the operational precautions listed below are followed. A safety check of the crane by the Plant and Equipment Division in accordance with Safety Code ASAB 30.2 will be performed on an annual basis.

11.1.4. Operational precautions

1. Only qualified personnel are permitted to operate the crane.
2. Any operation of the crane in or over the pool must be by Operations personnel or by qualified "crane operators." If by a crane operator, the operation must be under the surveillance of Operations personnel.
3. A loaded crane should never be moved over the BSR or PCA. Whenever it is desirable to transfer a "load" via the crane, it should be routed around the pool rather than over it - except by special permission of the BSR supervisor.
4. When approaching the "stops," cease all movement about 12 in. from the "stops" then continue the movement with an inching motion.
5. Always visually inspect the cable and cable drum to ensure proper tracking of the cable.
6. Never overload the crane. The load limit is 15,000 lbs on the overhead crane.
7. Before any carrier is lowered into the pool, the lifting device must be approved by the BSR supervisor.
8. All lifts should be made vertically, if possible, to ensure proper tracking of the cable on the cable drum.

9. Prior to using the crane for lifting fuel and/or fuel racks, a "checkout" should be made on the overhead crane controls to ensure proper operation. The check is as follows:
   a. Press the "stop" button.
   b. Attempt to raise and lower the crane hook. If the system is in order, no action of the crane should result.
   c. If the system is in order, press the "start" button and proceed.
   d. If the system is not in order, discontinue its use and report the condition to the BSR supervisor.
10. Always post a man at the crane switch box located on the east wall next to the northeast corner of the pool when the crane hook is to be raised or lowered with potentially highly radioactive components attached to the hook.

11.2. Scintillation Counter

11.2.1. Introduction

The scintillation counter is an instrument used to count the number of nuclear disintegrations occurring in a sample of some material. In the particular case of concern here, it is a one milliliter sample of water taken from the reactor primary water system, the reactor secondary system, the reactor demineralizer system, or various sumps. These samples are counted for 1 min and the data are logged in the back section

of the BSR daily log. Operations supervision is responsible for inspecting these routine entries for the purpose of detecting any possible deviations or trends from the normal. (This instrument is located in the basement of the ORR and services the ORR-BSR complex.)

11.2.2. Precautions

The following precautions should be taken:

1. Wipe the outside of the test tube containing the sample with a tissue and avoid spilling any of the sample in the counting well; any contamination will result in erroneous data.
2. Maintain an accurate record of the background counts and the calibration factor. (A clipboard is located at the counter for these data.)
3. Should the background increase appreciably (more than +7% from the average of previous five measurements), it is most likely that the well has become contaminated. If so, it should be decontaminated immediately. (In most cases, wiping with a piece of damp cheesecloth is sufficient for decontamination of the well.)

11.2.3. Voltage adjustments

Under normal circumstances the power to the equipment will remain on. This is to ensure stabilization of the high-voltage supply. Usually, the equipment will not require adjustments, except for perhaps a monthly high-voltage check to ensure that operation is within the plateau region of the counter.

This plateau region will be determined on a monthly basis. The method of plateau determination will be to take a series of 1-min counts at various high-voltage settings. A curve of counts/min versus voltage can then be plotted and the plateau will be the flat part of the curve. The high voltage should be set midway on the plateau. To turn the power on:

1. Turn the high-voltage power supply to H.V.; and
2. Increase the high-voltage control slowly, starting at position A, until the desired level is obtained.
3. The desired operating voltage will be determined in the manner described above.

11.2.4. Calibration

As is the case for all types of counting equipment, this unit must be calibrated to give an absolute measurement. This is accomplished by using the cesium source, with a calibration supplied by the Analytical Chemistry Group, as a standard.

To determine the calibration factor:

1. Insert the cesium standard into the counter well.
2. Replace the lead plug shield which reduces background radiation.
3. Reset the timer; reset the total-count register.
4. Take a 1-min count by using the counter "off" switch.
5. Record the data.
6. Remove the cesium standard; replace the lead plug.
7. Reset the timer; reset the total-count register.
8. Take a 1-min count for general background.
9. Record the data.

10. The total count obtained in Step No. 9 is due to background and should be subtracted from the number obtained in Step No. 5 to give the net counts due to the cesium standard.
11. The current value of the standard is obtained from a chart of the value of the standard as a function of time. Use the date closest to the current date to find the current value of the standard.
12. After the current value has been determined, it should be divided by the net count obtained in Step 10. This will give the calibration factor to be used.

11.2.5. Sample preparation

In preparing the water samples for counting, observe the following procedures:

1. Using the scintillation sample tube; place 1 ml of water in the tube.
2. Place a cork stopper in the tube.
3. Label each tube to ensure proper identification of samples.
4. Dry each sample tube with clean facial tissue before placing it in the counter well.
5. Maintain the following sample decay time on the various water systems prior to counting.
   a. ORR and BSR water sample - 20 min.
   b. The OGR Canal and samples from the process and intermediate-level-waste systems require no specific delay or decay time prior to being counted.

11.2.6. Counting

The counting procedure is as follows:

1. Determine the calibration factor.
2. Insert the sample into the well of the counter.
3. Reset the timer; reset the total-count register.
4. Turn the counter on and count for 1 min.
5. Subtract the background count, which is posted on the scaler.
6. Multiply the count obtained in Step 5 by the calibration factor posted on the scaler to give the counts min^{-1} ml^{-1}.
7. Record the results in their respective places - clipboard, log-book, etc.

11.3. The Leeds & Northrup Meter

11.3.1. Introduction

The acidity of the reactor secondary water systems is monitored once each shift by obtaining samples and determining their pH with the analyzer located in the pump house.

11.3.2. Controls

1. Temperature °C compensator

The temperature °C compensator is a manual adjustment control which changes the electrical span of the instrument to correspond with the expected pH electrode signal at a specific temperature.

The control consists of a shunted single-turn potentiometer having a 50-division dial uniformly calibrated from 0 to 100°C. Its setting has an effect only on the 0 to 14 pH range and only when the TEMP COMP terminals at the rear of the meter are connected for MANUAL operation by means of the supplied jumper. Under these conditions, its setting compensates for the effect of temperature on the electrode system resulting from changes in temperature of the sample solution. It does not correct for the effect of temperature on the pH of the solution.

2. Standardize control

The standardize control is a knob which operates a dual potentiometer. The combined setting of these two potentiometers determines the magnitude and the polarity of a bias voltage obtained from a regulated power supply and applies this voltage in series with the input circuit. For the pH range this control is used to make the meter indicate the known pH of a reference buffered solution by compensating for variations in electrode zero potentials (asymmetry of electrode systems).

3. Span switch

This four-position switch establishes the various circuits required for making measurements over the ranges indicated by the SPAN switch.

4. Push to read switch

This pushbutton switch is a four-pole, single-section switch with push-push action. It has two

positions: a measure position which is latched or depressed position; and a stand-by position which is in released or up position.

11.3.3. Operational procedures

To determine the sample pH, using the Leeds & Northrup pH Analyzer, proceed as follows:

1. Make sure "push to read" switch is in stand-by (released) position.
2. Set "span" switch to 14 pH.
3. Measure buffered solution temperature and adjust "temperature °C" compensator to measured temperature.
4. Determine pH from "temperature versus pH" table on buffered solution bottle.
5. Immerse electrodes in buffered solution.
6. Depress "push to read" switch to measure position and adjust "standardize" control until pH determined in Step 4 is indicated on the 0 to 14 scale.
7. Rinse electrodes and thermometer in sample solution and immerse them in sample solution.
8. Measure sample solution temperature and adjust "temperature °C" compensator to measured temperature.
9. Depress "push to read" switch to measure position and read pH on 0 to 14 scale.
10. Discard sample solution and rinse and immerse the electrodes in process water.

11.3.4. Pope-Model 1500 pH/Ion Meter

Instructions for the operation of this meter are posted at the sample station.

11.4. Underwater Periscope

11.4.1. Introduction

The underwater periscope is an optical instrument used for the remote viewing of submerged objects. At the reactor facilities, the periscope has become a useful tool for the detailed inspection of highly radioactive items that must remain shielded by water.

11.4.2. Description

The periscope kit consists of several items which are pictured in Figs. 11.1, 11.2, and 11.3 and are described as follows:

1. A viewing section. This section permits the viewer to focus the instrument. An eye hook is mounted on the top side of this piece to allow the periscope to be suspended from an overhead crane.
2. A 15-ft tubular section. This section is the "middle piece" of the periscope - to the top connection, the viewing section attached. Located at the top section is a valve to allow pressurization of the periscope. (The valve is similar to that on an automobile tire.)
3. Four 4-ft extension tubes. Each extension tube used in the assembly extends the minimum permissible distance between the viewing level and object level approximately 55 in. (The minimum distances that can be obtained, allowing for focus, are 15 ft; 19 ft, 8 in; 24 ft, 5 in; 29 ft, 1 in; and 33 ft, 9 in.

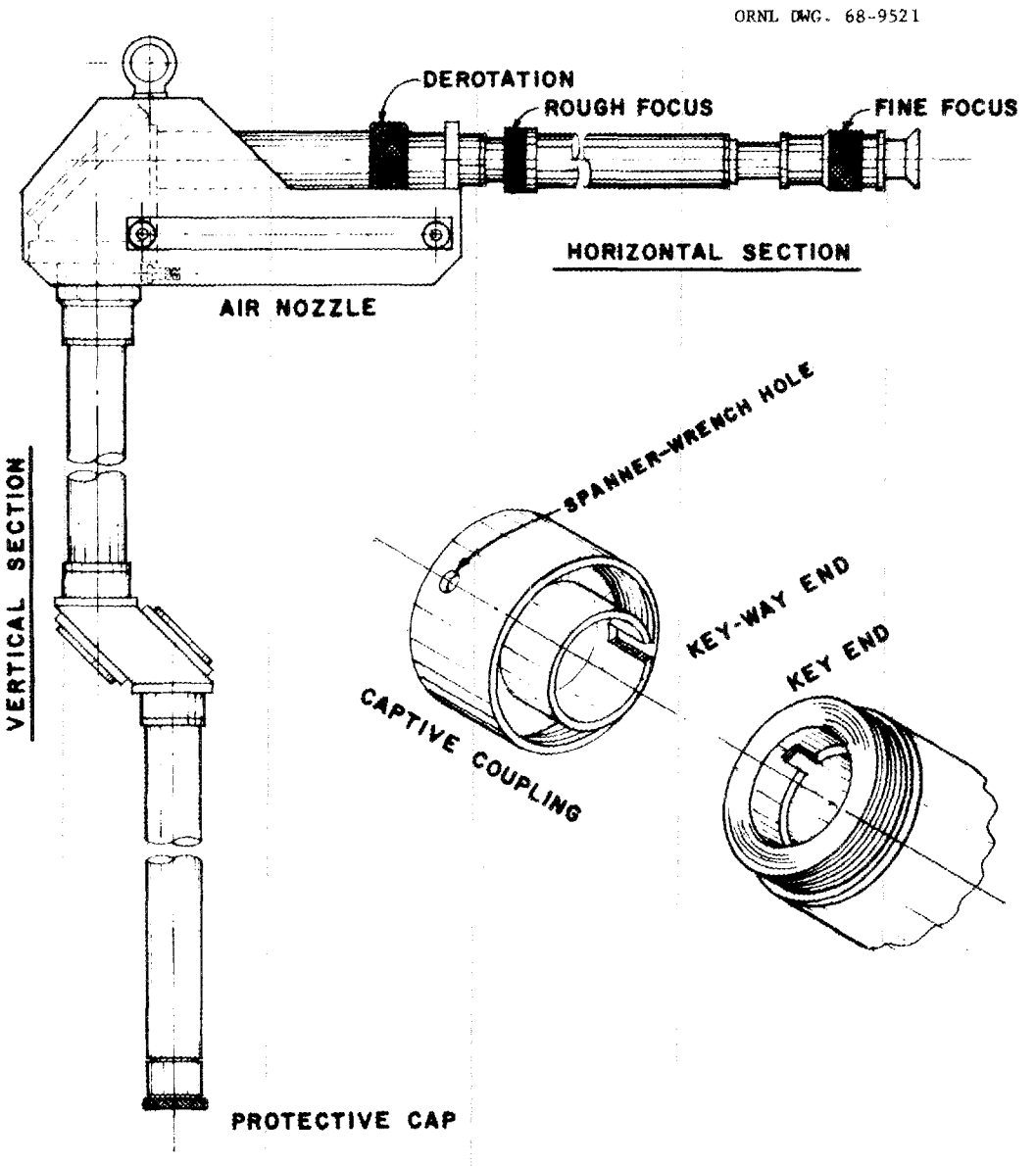

Fig. 11.1. Underwater periscope.

ORNL DWG. 68-9522

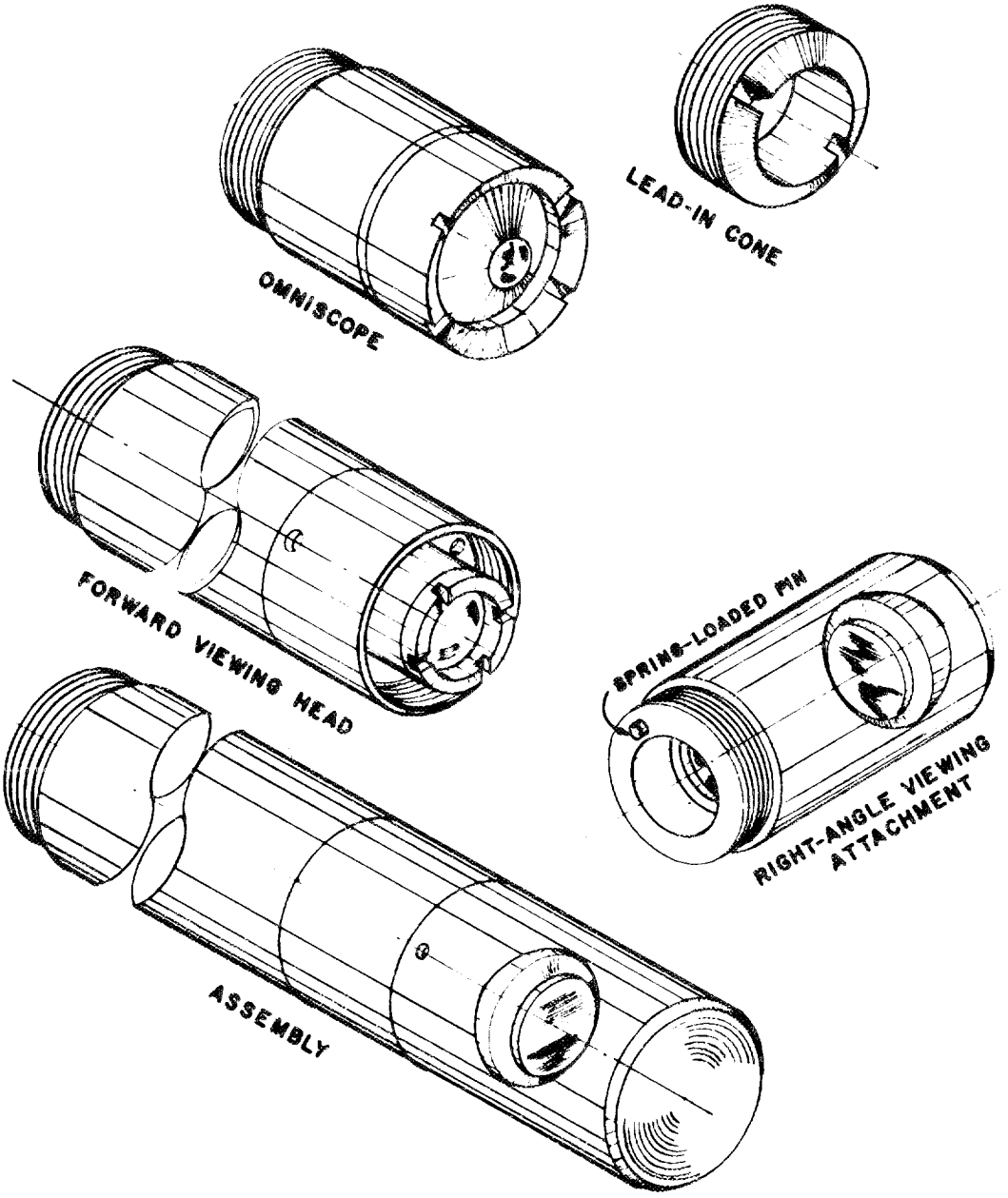

Fig. 11.2. Objectives.

ORNL DWG. 68-9523

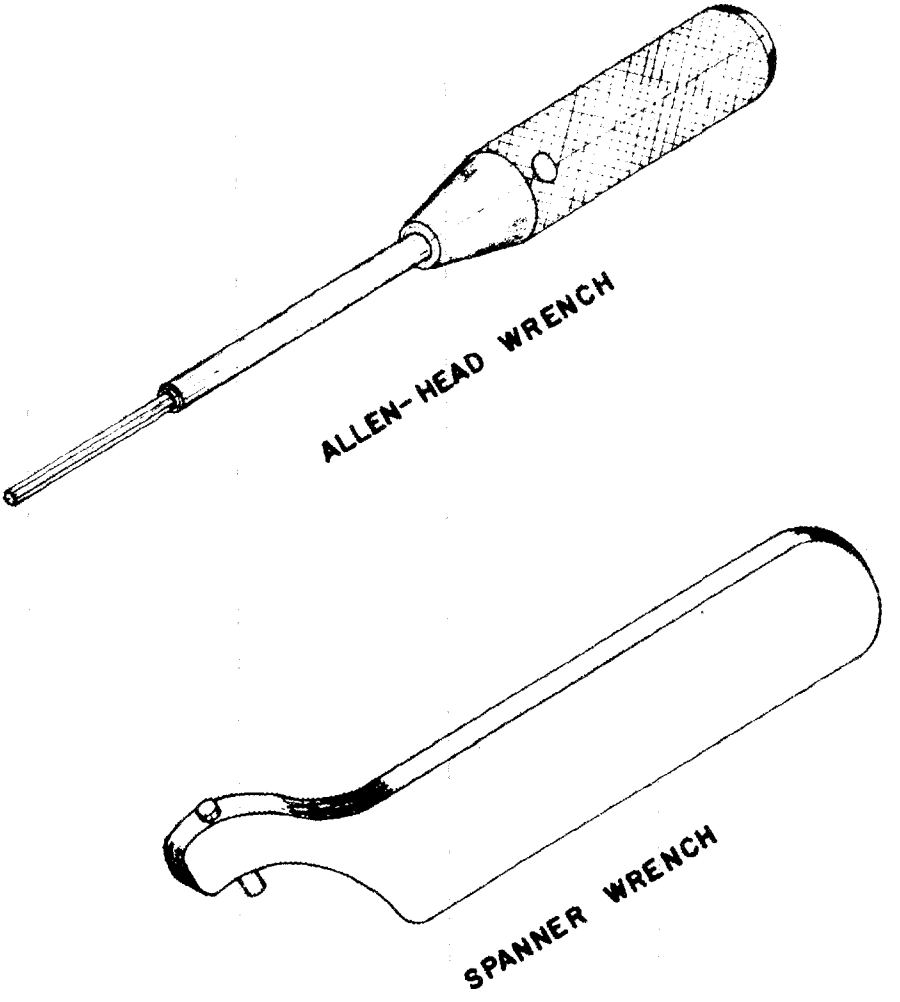

Fig. 11.3. Tools.

4. Three viewing heads. These attachments are as follows:
   a. An omniscope. This piece is used for wide-angle (140°) viewing; the optics do not magnify the object. (NOTE: Subtract 6 in. from the distance listed in item 3 when using this head since the 6-in. captive coupling is not used for wide-angle viewing.)
   b. A forward viewing, 4X objective. This piece will allow the viewer to observe the top side of the object (the field of vision is straight down when the periscope is suspended in the vertical position); the optics will magnify the object by four times. (NOTE: The 6-in. captive coupling precedes this piece in the assembly.)
   c. A right-angle, 4X objective. This piece will allow the viewer to observe the sides of an object (the field of vision is at a right angle to the periscope when the periscope is suspended in a vertical position); the optics will magnify the object four times. (NOTE: The 6-in. captive coupling precedes this piece in the assembly.)
5. A 6-in. captive coupling. This piece is attached to the 15-ft tubular section directly when either of the two magnifying heads is used.
6. An Allen-head wrench. This is to used to attach the viewing piece to the 15-ft tubular section.

7. A spanner wrench. This is used to secure the various tubular pieces to each other (viewing heads, extension tubes, etc.).
8. An attachment to allow pressurization of the 15-ft tubular section. This attachment is similar to those used at a service station to pressurize an automobile tire.

All these pieces are stored in two instrument boxes.

11.4.3. Assembly procedures

1. Prepare a working area. This should consist mainly of placing a 20-ft section of blotting paper on a cleared area of the floor where the instrument is to be assembled.
2. Remove the viewing piece and the 15-ft tubular piece to the working area. (PRECAUTION: Two individuals should remove the 15-ft section to facilitate a safe transfer. Do not allow this section to "sag" in the middle.)
3. Remove the 3 Allen-head screws securing the black-colored caps on the viewing piece and on the 15-ft tubular piece.
4. Attach the viewing piece to the tubular piece using the 5 Allen-head screws provided. (Align the pressurizing valve facing the eyepiece.)
5. Attach the 6-in. captive coupling section to the bottom end of the 15-ft section. (PRECAUTION: Carefully match the keys in the keyways when connecting the

viewing heads, extension, tubes, etc., to the periscope. Use the spanner wrench to provide the proper torque for a tight seal around the rubber O-rings.)

6. Attach either of the two magnifying viewing heads to the 6-in. captive coupling. (NOTE: If the wide-angle viewing head is to be used, the captive coupling is omitted from the assembly. If a 4-ft extension is needed, it should be attached directly to the 15-ft section, preceding the 6-in. captive coupling.)
7. Pressurize the periscope with dry nitrogen. To prevent water from leaking into the periscope and subsequently distorting the optical characteristics, the periscope should be pressurized to a value slightly in excess of the maximum hydrostatic head to be expected. In general, pressurize to an additional 1 psig fo each 2 ft the viewing head will be submerged. (PRECAUTION: The pressure should be increased slowly, in increments; and the final pressure should be rechecked after about 10 min.)

11.4.4. Procedure for transferring the periscope to the pool

1. Secure a rope through the eye hook on the viewing section and prepare a loop to attach to the small crane. Allow about 3 ft of rope to separate the crane from the periscope so that the crane does not present any obstacle problems to the viewer.
2. Raise the crane very slowly to take the slack out of the rope. When the viewing section of the periscope is raised slightly off the floor and until the

periscope is suspended completely from the rope, two individuals should support the 15-ft tubular section in such a manner as to prevent any possible sagging or bowing of the center section.

3. Transfer the periscope to the pool. Do not allow unnecessary "swinging around" of the viewing head while the periscope is hanging from the crane. As the viewing head is being submerged, be certain that it does not strike any other objects in the pool.

11.4.5. Focusing procedures

1. Rotate the knurled eyepiece barrel until the eyepiece is roughly in the middle of its fine-focusing travel.
2. Loosen the knurled locking ring outside the off-set bridge structure. Slide the eyepiece tube back and forth until the image comes into approximate focus and then tighten the locking ring.
3. The image may be reversed or tilted, depending on the number of extensions used and on the orientation of the right-angle viewing attachment. The orientation of the image can be changed by rotating the knurled ring located inside the off-set bridge structure (ring farthest from eyepiece).

NOTE: A camera adapter for a 4X5 graphic camera is furnished with the periscope if photographs are desired (see "Operating Instructions for Underwater Periscope Model No. 5000," Lerma Engineering Corporation, Northampton, Massachusetts).

11.4.6. Procedures for disassembling the periscope

1. Remove the periscope from the pool water with the same degree of care as outlined previously. With clean rags, wipe the periscope dry as it is being raised from the water.
2. Transfer the periscope to the blotting paper. Two individuals are again needed to support the tubular section as it is laid down. Remove the rope from the crane.
3. Wipe the periscope with clean wet rags and have the Health Physicist check the assembly for contamination. Decontaminate the assembly if it is necessary. The transferable surface contamination limits are: 30 d min^{-1} cm^{-2} for alpha and 1000 d min^{-1} cm^{-2} for beta-gamma emitters. However, when the contamination involves radionuclides such as plutonium or some other long-lived emitter of comparable toxicity, the alpha levels permitted should average no more than 1/100 the given value.
4. To depressurize the periscope, depress the center pin in the valve (similar to method used to deflate an automobile tire).
5. To disassemble the periscope, follow the assembly procedures in reverse.
6. Store the disassembled pieces in the two instrument boxes. (PRECAUTION: Two individuals are required to transfer the 15-ft section.)

11.5. Mobile Catwalk Bridge

11.5.1. Introduction

The mobile catwalk bridge was formerly the spectrometer crane bridge. The spectrometer crane was installed in 1958 for special tests conducted by experimenters in the Neutron Physics Division when operation of the reactor was their responsibility. Since the spectrometer crane was no longer of any use, the crane was removed and the bridge converted to a mobile catwalk bridge for use primarily to handle Solid State Division experiments.

11.5.2. Description

The bridge moves on tracks running in the north-south direction, as does the overhead bridge crane. The rails for the catwalk bridge are at a lower elevation than the rails for the overhead crane.

The power supply to the mobile catwalk bridge is located on the west wall near the exit door; this 440-V panel box remains off and locked out when the bridge is not in use. The controls for the catwalk bridge are located on the west end of the bridge and are as follows: "A," safety switch; "B," key switch (the key for the controls will be kept in the BSR control room locked key box when the bridge is not being used); "C," high-low speed selector; "D," signal bell; and "E," throttle-direction control.

11.5.3. Mobile catwalk bridge operating instructions*

Initials

I. Preparation for bridge use

A. Before ascending to the bridge:

_____ 1. Obtain the "control switch" key from the BSR control room key box.

_____ 2. Check to see that the push button pendant of the 7 1/2-ton crane is hoisted as high as possible.

_____ 3. Check to see if any load is suspended from the 7 1/2-ton crane or if the crane hook will interfere with clear passage.

_____ 4. Check to see that no tall devices such as ladders, pool experiments, tools, or equipment will interfere with clear passage.

_____ 5. Check to see that no maintenance work is taking place on the bridges or feedrail system.

_____ 6. Unlock and turn on switch labeled "positioner" located at left of door to Room No. 160.

B. Ascend to bridge via stairs at NE corner of pool room

_____ 1. Observe if any ladders or other objects are leaning on or are supported by the bridge in its "parked" condition.

_____ 2. Check feedrail trough, feed rail, and tracks to see that they are clear.

---

*Operations controlled exclusively by Reactor Operations Personnel.

_____ 3. Close local safety switch "A" to turn on bridge control power.

_____ 4. Unlock key switch "B."

NOTE: This is a "dead man" type interlock switch which must be held continuously in the CCW direction before and during movement of the bridge. Release, even momentary, will stop the bridge motor immediately. To re-start, the throttle must first be returned to neutral, the key switch turned CCW, and held; then the throttle may be set for desired speed and direction. There is a very brief time delay in that sequence.

_____ 5. Select "slow" or "fast" travel rate by selector switch "C."

_____ 6. Sound the signal bell to alert personnel that the bridge is to be used by depressing red button "D."

II. Moving the bridge

_____ A. Grasp the brass handle of the key switch "B," turn CCW to the limit and hold there.

_____ B. Push the throttle switch "E" forward (or in the direction travel is desired; i.e., forward or reverse).

NOTE: The speed is increased by moving the lever farther from the neutral position. During bridge movement, use care that the push button pendant of the 7/12-ton crane has clearance over the catwalk bridge and that the movement of the bridge is satisfactory. An observer must be in the pool room (floor area) to check operation

of the movement and observe clearance at the PCA, the instrument bridge, and the BSR bridge as the catwalk bridge moves over the respective items.

C. Sound the signal bell occasionally to alert personnel that the bridge is moving by depressing red button "D."

D. Upon nearing the desired stopping point, the throttle should be pulled back toward the neutral position.

E. To stop the bridge movement, place the throttle in the neutral position or release the key switch.

NOTE: If the key switch is released while the throttle is not at neutral, it will be necessary to return the throttle to neutral, then engage the key switch before a re-start can be made.

F. To reverse directions, push the throttle switch "E" to the reverse position while maintaining key switch "B" engagement.

G. When returning to the "park" position (north end of pool room), watch out for:

1. The push button pendant on the 7 1/2-ton crane.
2. The bannister railing on the NE stairs. The observer will signal the bridge operator when the bridge is approaching the stops attached to the bridge rails.

III. Securing the bridge in the "park" position

A. Lock the key switch "B" and remove the key.

B. Open the local safety switch "A."

C. Descend the bridge to the stairs at the NE corner of the pool room.

_____ D. Open and lock out the power supply switch labeled "positioner" located at left of door to Room No. 160.

_____ E. Return the key to the BSR control room key box.

11.6. BSR Acid Storage Tank

11.6.1 Introduction

Sulfuric acid is used to control the pH of the BSR and ORR pool secondary water systems and to regenerate the BSR demineralizer cation column. The sulfuric acid that is used for this is taken from a storage tank located at the southeast corner of the tower basin.

11.6.2. Description

The storage tank is stainless steel and has a volume of 850 gal. The liquid level in the tank is determined by dp cells with a readout on a Foxboro indicator. The indicator reads in percent of the volume in the tank that is filled and reads from 0 to 100% as depicted in Figure 11.4.

The sulfuric acid tank is filled from a portable acid tank and the normal volume ordered is 450 gal. To minimize the risk of over-flowing the tank, acid is not ordered until the liquid level in the tank has decreased to 25%.

11.6.3. Procedure

Protective clothing (shoe covers, face shield, rubber apron, and rubber gloves) must be worn. Also see Section 6.2.7, Procedures for handling hazardous chemicals.

To transfer the acid to the storage tank and to clean the portable acid tank, the following procedure must be followed.

Table 11.1. Procedure for transferring acid to the storage tank

Objective	Procedure	Remarks
1. Prepare to transfer H_2SO_4 from the acid transport tank to the storage tank	Install the stainless steel flex tubing to valve 105 and attach the other end of the stainless steel flex tubing, from valve 105, to the portable tank unloading valve Open valves HCV-303, HCV-307, and HCV-308. Check air pressure on pressure indicator adjacent to valve HCV-308. Adjust the air pressure to 10 psi Close valve HCV-308 and connect the plastic tubing from valve HCV-308 to the valve on the acid transport tank	Valves HCV-303 and HCV-307 are normally open and are located on the main air supply line in in the BSR pump house. Valve HCV-308 is located at the east end of the acid storage tank. NOTE: The pressure check must be made before connecting the air line to the acid transport tank
2. Transfer acid from the transport tank to the storage tank	Open valve 105 and the transport tank unloading valve Open valve HCV-308 and the air valve on the acid transport tank Observe the liquid level readout from the dp cell to see that the liquid level is increasing. When the air pressure on the transport tank drops from 10 to 3 psig, the acid transport tank will normally be empty. A visual check of the tank should be made to confirm this	Valve 105 is located on the acid storage tank fill line

Table 11.1. (continued)

Objective	Procedure	Remarks
3. Disconnect the acid transport tank from the storage tank	Close valve HCV-308, the air valve on the transport tank, the dump valve on the transport tank, and valve 105 Disconnect the plastic tubing from the air valve on the acid transport tank. Disconnect the stainless steel flex tubing from the portable acid tank. CAUTION: Some residual acid will remain in the flex tubing in the drain at the east end of the storage tank pad. Rinse the storage tank pad with process water Open valve 105 to permit the residual acid below valve 105 to drain from the flex tubing Disconnect the stainless steel flex tubing from valve 105, rinse acid from tubing, and store tubing over the acid tank	Close the valves in this order
4. Rinse the transport tank	a. Transfer the acid transport tank and truck to Building 3004 b. Check valve V-6053 to see that it is fully closed. This valve is located on the drain line from the bottom the tank (1.5-in. line)	

Table 11.1. (continued)

Objective	Procedure	Remarks
4. (continued)	c. Remove the 2-in. pipe cap and open the valve on the fill line to provide access into the tank. Using a dip-stick-type measuring device, determine if the transport acid tank contains only approximately 1.5 to 2 in. of acid d. Start a flow of water under the truck of at least 10 gpm e. Remove the pipe cap on the line down-stream from valve V-6053 and under the floor of the truck. Caution must be exercised while removing the pipe cap. If valve V-6053 should leak, the pipe between the valve and pipe cap will be filled with acid. Install special tubing and route the transport tank drain to the storm drain f. Open valve V-6053 until all the residual acid has been drained from the tank. Then rinse the tank thoroughly with process water. Use the tank fill line for tank access After sufficient rinse, stop the process water and permit the tank to drain. Then close valve V-6053, replace the pipe cap at valve V-6053 and on the fill line, close the fill line valve. (NOTE: Be sure to put on protective clothing before beginning this operation.)	

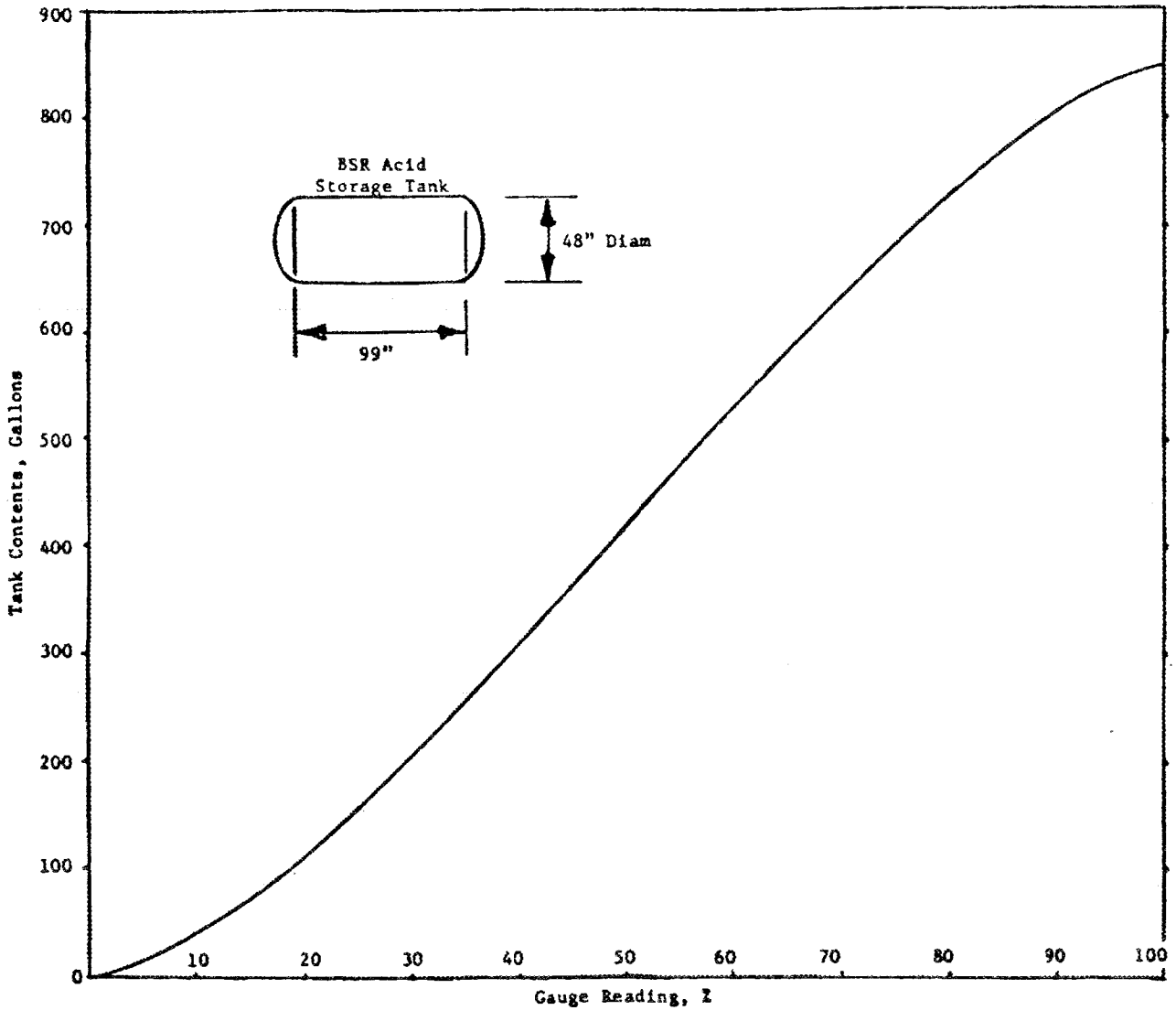

Fig. 11.4. BSR acid storage tank.

12. RECORDS AND DATA ACCUMULATION

12.1. Introduction

The proper acquisition and accumulation of operating data on an hourly, daily, or weekly basis is of the utmost importance and cannot be overemphasized. These data are not only needed to prepare reports, they are necessary to evaluate the continuing operating status of the various systems throughout the reactor complex.

The operator is responsible for obtaining and recording most of the data required and reporting any deviations from normal. The supervisor is responsible for carefully studying all the routine data (hourly readings, water systems data, log-book entries, etc.) for the purpose of detecting any possible trends away from normal values.

12.2. Daily Report Forms

On the following pages are examples of the various forms of data sheets used at the BSR. The items on each sheet are self-explanatory; consequently, detailed descriptions of each item will not be given.

12.2.1. BSR hourly readings (Example 12.1)

Three times during each shift the operator at the console will obtain and record the required data. Any deviation from normal values should be called to the attention of the shift supervisor. If the reactor is being operated remotely, the data sheets will be transferred to the ORR control room. These completed sheets are filed in the BSR control room office.

BSR HOURLY READINGS

DATE

SHIFT

Check One: ☐ Local Operation ☐ Remote Operation

DAY NO.

SUPERVISOR

Time		1:00 AM 9:00 AM 5:00 PM			4:00 AM 12:00 N 8:00 PM			7:00 AM 3:00 PM 11:00 PM
Temperature Reactor Water In, °F (Pt. 1)								
Temperature Reactor Water Out, °F (Pt. 2)								
ΔT, °F (TdR-17)								
Reactor Water Flow, gpm (FR-10)								
ΔT x Flow x 0.1448 = kw								
No. 1 Safety								
No. 2 Safety								
No. 3 Safety								
Reactor Exit Water Radioactivity, mr hr								
No. 1 Shim Rod, Inches Out								
No. 2 Shim Rod, Inches Out								
No. 3 Shim Rod, Inches Out								
No. 4 Shim Rod, (Reg. Rod), Inches Out								
No. 5 Shim Rod, Inches Out								
No. 6 Shim Rod, Inches Out								
Log N								

UCN-8152
(3 11-71)

REVIEWED AND APPROVED BY ENGINEER

Example 12.1.

12.2.2. BSR power changes and accumulated power (Example 12.2)

This form is used to maintain a record of the reactor power level on an hourly basis and a record of the accumulated energy for a 24-h period. If there are changes in power level due to unscheduled shutdowns or termination of short-duration runs, they are recorded after each power change regardless of the time.

12.2.3. BSR shift check sheets (Examples 12.3, 12.4, and 12.5)

To ensure a high degree of operating safety and performance, a number of checks on the various reactor systems and components has been selected to be made on a routine basis.

Each shift on duty will have a "roving" operator inspect the reactor complex for each of the items listed on the check sheet applicable for that particular shift. When each item is completed, it is checked on the sheet. Any abnormalities should be reported to the shift engineer. These check sheets, prepared for the midnight (12 to 8) shift (Example 12.3), the day (8 to 4) shift (Example 12.4), and the evening (4 to 12) shift (Example 12.5), are filed in the BSR control room office.

12.2.4. BSR daily summary (Example 12.6)

Toward the conclusion of each evening shift, an operator will begin to prepare the daily summary (Example 12.6). This form, normally completed by the 12 to 8 shift, contains the hours operated, the accumulated energy for the day, and information on the demineralizer units. These sheets are filed in the BSR control room office.

BSR POWER CHANGES AND ACCUMULATED KWH

DATE
DAY NO.

12-8 SHIFT SUPERVISOR				8-4 SHIFT SUPERVISOR				4-12 SHIFT SUPERVISOR			
TIME	POWER LEVEL	INCREMENTAL kwh	ACCUMULATED kwh	TIME	POWER LEVEL	INCREMENTAL kwh	ACCUMULATED kwh	TIME	POWER LEVEL	INCREMENTAL kwh	ACCUMULATED kwh

UCN-7973
(3 7-67)

Example 12.2.

BSR ROUTINE CHECK SHEET

12 - 8 SHIFT

STARTING DATE | SHIFT

CHECKED BY (Initials)							
	SAT.	SUN.	MON.	TUE.	WED.	THUR.	FRI.
All doors leading to pool area and control room are locked							
Check special instruction clipboard							
Pool water level is adequate. Record level on clipboard, SE corner of pool							
Skimmer operating properly							
CAM's and Monitrons operating properly							
CAM's and Monitrons checked with source							
Cutie pies and survey meters in proper locations							
Evacuation horn tested							
N_2 supply and pressure for evacuation horn checked							
Hand cranks on reactor, reactor bridge, and instrument bridge chained and locked							
Check level of D_2O in overflow bottles to east and west D_2O tanks							
Off-gas hood port holes for D_2O overflow bottles are unobstructed							
Overhead and spectrometer crane switches locked in off position when not in use							
Fuel-handling tools (PCA and BSR) locked in place when not in use							
Experiment panels checked and services completed							
Evacuation package checked							
All yellow hot cans emptied							
High-current, low-voltage magnet test if reactor is operating							
Area inspection including core, pumps, fans, motors (Log abnormalities)							
Secondary pH, chromate, and total solids checked and logged if secondary is operating							
Check tower fans for vibration and oil level when secondary is operating							
Demineralizer integrator reading 12:01 a.m.							
Turn all steam tracing, pH probe hutment heater, and primary flow cell hutment heater on when outside temperature drops to ~ 35° F							

REVIEWED AND APPROVED BY ENGINEER

UCN-8100B
(3 4-72)

Example 12.3.

BSR ROUTINE CHECK SHEET

8 - 4 SHIFT

STARTING DATE _____ SHIFT _____

CHECKED BY (Initials)							
	FRI.	SAT.	SUN.	MON.	TUE.	WED.	THU.
All doors leading to pool area and control room are locked							
Check special instruction clipboard							
Pool water level is adequate. Record level on clipboard at southeast corner of pool							
Skimmer operating properly							
CAM's and Monitrons operating properly							
Cutie pie and survey meters in proper location							
Record pool room negative pressure – southeast							
Record pool room negative pressure – northwest							
Pool room roof fan "on" or "off"							
Hand cranks on reactor, reactor bridge, and instrument bridge chained and locked							
Check level in overflow bottles on east D_2O tank							
Off-gas hood port holes for D_2O overflow bottle are unobstructed							
Overflow bottle off-gas hood Drierite checked							
KWH Meter Reading							
Pressurize DP cell housing							
Overhead crane and mobile catwalk bridge switches locked in off position when not in use							
Fuel handling tools (PCA and BSR) locked in place when not in use							
Experiments checked and services completed							
Area inspection including core, pumps, fans, motors (log abnormalities)							
Control room portable emergency light checked							
Control room emergency lights "bright"							
Pool room emergency light "dim"							
High-current, low-voltage magnet test if reactor is operating							
Modular power supply voltage monitors checked if reactor is operating							
BSR Radiation Survey (To be taken when reactor is operating)							

UCN-8100
(3 5-81)

(Continued on back of page)

Example 12.4.

BSR ROUTINE CHECK SHEET

8 - 4 SHIFT

	FRI.	SAT.	SUN.	MON.	TUE.	WED.	THU.
Supplies inventoried and orders placed for items needed							
Check sump pump in old vault for proper operation							
Check tower fans for vibration and oil level if secondary is operating							
Secondary pH, phosphate concentration, and total solids checked and logged when secondary is operating							
Secondary pH probe filter turned one complete turn and flushed							
Secondary water counts taken and logged when operating							
Tower treatment (Dearborn 321) added							
pH and resistance on demineralizer inlet and exit (daily)							
Water counts on demineralizer inlet and exit if reactor is operating							
Safety Showers Checked: 1. Secondary cooling tower 2. BSR pump house							
Cell ventilation pressure drop readings							
Turn all steam tracing, pH probe hutment heater, and primary flow Δp cell hutment heater on if outside temperature drops to ~ 35° F							

REVIEWED AND APPROVED BY ENGINEER

Example 12.4. (continued).

BSR ROUTINE CHECK SHEET

4 - 12 SHIFT

STARTING DATE

SHIFT

CHECKED BY (Initials)							
	WED.	THUR.	FRI.	SAT.	SUN.	MON.	TUE.
All doors leading to pool area and control room locked							
Check special instruction clipboard							
Pool water level is adequate. Record level on clipboard at southeast corner of pool							
Skimmer operating properly							
CAM's and Monitron's operating properly							
Cutie-pies and survey meters in proper locations							
Hand cranks on reactor, reactor bridge, and instrument bridge chained and locked							
Check level in overflow bottles on east D_2O tank							
Off-gas hood port holes for D_2O overflow bottle are unobstructed							
Overhead crane and mobile catwalk bridge switches locked in off position when not in use							
Fuel-handling tools (PCA and BSR) locked in place when not in use							
Experiment panels checked and services completed							
Area inspections including core, pumps, fans, motors (Log abnormalities)							
Secondary pH, phosphate concentration, and total solids checked and logged if secondary is operating							
Check tower fans for vibration and oil level if secondary is operating							
Turn all steam tracing, pH probe hutment heater, and primary flow cell hutment heater on if outside temperature drops to 35° F							

REVIEWED AND APPROVED BY ENGINEER

UCN-8100A
(3 5-81)

Example 12.5.

BSR DAILY SUMMARY

DAY NO.	DATE	ENGINEER

I POWER

SHIFT	HOURS OPERATED	HOURS DOWN	kwh INSTRUMENT	kwh HEAT	ACCUMULATED (INSTRUMENT) POWER, kwh
12-8					PREVIOUS TOTAL
8-4					DAY'S TOTAL
4-12					CURRENT TOTAL
TOTAL					

II DEMINERALIZER

	pH	RESISTIVITY	COUNTS $min^{-1} \cdot ml^{-1}$	REMARKS
INLET				
EXIT				
DAY'S THROUGHPUT (gal)				

III COMMENTS

UCN-7974
(3 3-71)

Example 12.6.

12.2.5. BSR log book

At the end of each shift, the supervisor in charge of operating the reactor should write the log using the following format:

1. Operations. List the total time the reactor was operated during the shift.
2. Shutdown. List the number of shutdowns occurring during the shift and the duration of each. A reduction in power level below 100 kW should be considered a shutdown.
3. Troubles. This item is self-explanatory; it should not include trivia. Any abnormalities concerning the instrument readouts should be described in detail.
4. Checks. If all the routine checks required for the particular shift have been made, it should be noted. Also, any checks which were not made should be listed, so that the oncoming shift can complete them when possible.
5. Maintenance. List all work performed at the reactor complex by individuals in the maintenance groups.
6. Research. List any service performed for any of the individuals in the research group. Also list the pertinent activities of the experimenters.
7. Samples. List all pertinent information on materials irradiated at the BSR (identification, duration in flux, present location, etc.).
8. Miscellaneous. List all items worthy of attention. In the back of the BSR log book, record the pertinent information on the building evacuation test, the

startup rod position, the running total of accumulated kilowatt hours, the secondary water system, the primary water system (demineralizer), and the amount of liquid waste sent to the waste system (ILW or process).

12.3. Miscellaneous Report Forms

12.3.1. BSR weekly report (Example 12.7)

This report is a summation of the operating data obtained during the week. It includes information on maintenance performed at the reactor complex, troubles, modifications, etc. This report is prepared by the supervisor assigned to the BSR and is distributed through the Reactor Operations Section.

12.3.2. BSR quarterly report

This report, prepared by the reactor supervisor, is a compilation of operating data, and experiences covering a period of three months. It normally includes an analysis of reactor shutdowns, reactor controls, information on experiments, and special studies performed.

12.3.3. BSR startup checklist (Example 12.8)

Prior to a reactor startup, it is imperative that all systems are functioning as designed and that all instrumentation and administrative requirements for startup of the reactor are met. this is the responsibility of the supervisor in charge of the startup. To ensure a proper checkout of the various systems, a startup checklist is provided. The supervisor must initial each item as the designated requirements are satisfied.

BSR WEEKLY REPORT

WEEK ENDING

A. OPERATING DATA

KWH AT END OF WEEK	KWH AT BEGINNING OF WEEK	TOTAL KWH DURING WEEK

DATE	DAY NO.	ACCUMULATED ENERGY (kwh)	HOURS OPERATED	HOURS DOWN
TOTAL				

B. PREDICTED SHIM ROD POSITION AT CRITICAL

DATE	SHIFT	REACTOR DOWN (hrs.)	PREDICTED ROD POSITION (in.)	ACTUAL ROD POSITION (in.)	
				AT 100 kw	AT 2 Mw

UCN-7260
(3 6-71) PAGE 1

Example 12.7.

C. USAGE OF REACTOR

FACILITY	DATE IN	DATE OUT	TIME (hr)	POWER LEVEL	PURPOSE	SPONSOR

UCN-7260
(3 8-66) PAGE 2

Example 12.7. (continued).

D. ANALYSIS OF SHUTDOWNS

DATE		SCHEDULED (hrs.)	UNSCHEDULED (hrs.)	REACTOR OPERATIONS (hrs.)	EXPERIMENTERS (hrs.)	DOWNTIME THIS WEEK (hrs.)	DESCRIPTION OF SHUTDOWN
BEGIN	END						
TOTAL							

Remarks:

UCN-7260
3 6-71 PAGE 3

Example 12.7. (continued).

E. REACTOR COOLING WATER

BYPASS FILTERS	SKIMMER	
DATE OF LAST CHANGE	EVAPORATION	
MAKE UP WATER ADDED TO POOL (GALLONS)	OTHERS	

PRIMARY DEMINERALIZER

RUN NO.	INITIATION DATE	TERMINATION DATE	pH		RESISTIVITY (ohm - cm)		COUNTS	
			IN	OUT	IN	OUT	IN	OUT

Total Gallons Through This Run

F. SECONDARY SYSTEM

pH AVERAGE	BETA, GAMMA ACTIVITY c/m/ml AVERAGE	PHOSPHATE ppm AVERAGE	CONDUCTIVITY ppm AVERAGE MICROMHOS

G. MISCELLANEOUS INFORMATION (MAINTENANCE AND CHANGES: INSTRUMENTATION AND CONTROLS, PROCESS SYSTEM, BSR SERVICES, ETC.)

UCN-7260
(3 12-79) PAGE 4

Example 12.7. (continued).

BSR START-UP CHECK LIST

NOTE: The supervisor making the start-up checks should initial each blank after completion of the item. (In addition the individual starting the checks should remain on duty until the reactor is made critical and stabilized at the desired power level; otherwise, the checks should be repeated by the next individual in charge.) Items marked with an asterisk should be completed following an electrical power outage.

SUPERVISOR							
DATE							
CORE NO.							
A. REACTOR AREA							
1. Proper loading and reactor position							
2. All core pieces in place and properly seated							
3. All experiment rigs in proper location and secured							
4. Proper source location							
5. Shim-rod drive units and fission-chamber-drive units in proper position and fastened to hold-down arms							
6. Cable connections installed to proper shim-rod drives							
7. All work in core completed and final inspection made							
8. Reactor carriage and bridge locked in position							
9. Instrument bridge locked in position							
B. EXPERIMENT FACILITIES							
1. All changes to experiments completed							
2. Experiment information sheets current							
3. Experiment safety-check sheets completed by instrument engineers (for all applicable experiments)							
*4. Special instruction sheets completed							
C. WATER SYSTEMS – MODE 1 (Convection Cooling)[a]							
1. Pool filled to proper level							
2. All pool-level alarms cleared							
3. Flapper valve in fully open position							
4. Jets on for operation at > 100 kw							
5. Demineralizer in service							
6. Water purity adequate							
7. Skimmer system in operation							
D. WATER SYSTEMS – MODE 2 (Forced Cooling)[a]							
1. Pool filled to proper level							
2. All pool-level alarms cleared							
3. Primary cooling system filled and vented							
4. Flapper valve in fully closed position							
*5. Primary cooling system flow established							

[a] *Either Section C or Section D must be completed.*

UCM-8909 (3 8-81)

Example 12.8.

BSR START-UP CHECK LIST (Cont'd)

	DATE						
D. WATER SYSTEMS – MODE 2 (Forced Cooling)[a] (Cont'd)							
*6. Demineralizer in Service							
7. Pool inlet temperature controller in automatic and setpoint established							
8. Secondary cooling system filled, treated, tower riser bypass valve closed and system ready for service							
9. Both the exit water and the decay-tank off-gas activity monitors operating							
*10. Skimmer system in operation							
E. INSTRUMENTATION CHECKS							
1. Local operation selected							
2. All utility services in order:							
a. Power circuits L-1 through L-9, located in 'Normal-Emergency' panel							
b. Power circuits L-21 through L-23, located in 'clean' panel							
c. Air supply							
3. All recorders, amplifiers, etc., turned on at least 1/2 hour prior to operation of the reactor							
4. Ionization chamber positions (check log book for any movement during shutdown)							
5. Log Count-Rate Channel							
a. Calibration and period response							
* (1) Calibrate CRM to 60 counts/sec on recorder and set on 'Use'							
(2) Check that as fission chamber is inserted counts increase and vice versa							
(3) Check period recorder for proper response when moving fission chamber							
(4) Check fission chamber noise calibration curve							
b. Interlock Checks							
(1) While withdrawing one shim rod, insert or withdraw the fission chamber intermittenly. Rod withdrawal should stop when chamber is in motion							

[a] *Either Section C or Section D must be completed.*

UCN-8809 (3 5-81) PAGE 2

Example 12.8. (continued).

BSR START-UP CHECK LIST (Cont'd)

	DATE						
E. INSTRUMENTATION CHECKS (Cont'd)							
5. b. (2) While withdrawing one shim rod, adjust the PHS setting to give a positive period of <25 sec. Rod withdrawal should stop.							
(3) With one rod off seat, adjust PHS to give 7 sec. period. A reverse should occur.							
c. Return to Startup Mode							
(1) Set PHS and gain at the posted startup value							
(2) Position fission chamber so that count rate >20 cps and < 40 cps							
6. Log--N Channel							
* a. Calibrate log--N amplifier with recorder and set on ' Operate '							
b. Chamber voltage: + _____ , − _____ , ±10%							
c. With the log--N amplifier on ' operate ', depress the negative voltage inhibit pushbutton on the log—N chamber supply and observe that an upscale reading occurs on the log—N recorder along with a positive period indication on the log—N period recorder. Turn to ' Ground ' setting.							
7. Servo Channel							
* a. Zero micromicroammeter							
b. Chamber voltage: + _____ , − _____ , ±10%							
c. With the range selector on 20 kW, depress the negative voltage inhibit pushbutton on the servo chamber power supply and observe that an upscale reading occurs on the micromicroammeter							
* 8. Magnet currents checked for gross errors (should be 0.5 A ±0.1A)							
9. Scram Checks							
a. Raise rods ~1 in. and scram by local manual button and reset slow scram. Repeat for remote scram switch.							
* b. With the log--N amplifier on "Ground" setting raise rods ~ 1 in. and scram by pushing the 1 sec button on the log--N amplifier. Set the log—N amplifier on 'operate'.							
* c. Raise rods ~1 in. and scram by No. 1 Jordon button.							
* d. Same for No. 2 Jordon button							
* e. Same for No. 3 Jordon button.							
* f. Reset all flux trips at voltage comparators.							
10. Check of Magnet Pulse Test Equipment							
a. Raise all rods 1 in. Depress ' pulse-test ' push-button on the sigma bus converter modele in each magnet control bin in turn and observe:							

UCN-8909 (3 6-82) PAGE 3

Example 12.8. (continued).

BSR START-UP CHECK LIST (Cont'd)

	DATE						
E. INSTRUMENTATION CHECKS (Cont'd)							
10. a. (1) A flash of each of two neon lamps on the sigma bus converter							
(2) The dual voltage comparator flux trip amber lamp is ON							
(3) That both shim rods associated with the bin under test are not dropped							
b. Reset all circuits on voltage comparators (all amber lights OFF, all green lamps ON)							
11. Observe that sigma bus monitor meter on each sigma bus converter module is in the green N_L band							
12. Set micromicroammeter range switch on desired range							
13. Servo demand at N_L for 2-Mw range or desired percent of range for $<$ 2 Mw selection							
*14. All air monitors and Monitrons normal							
15. Calibrate log gamma amplifier and set on 'operate'							
16. All instrument channels working properly and corresponding recorders tracking							
17. Annunciator panels clear (if not, reason for any alarm must be known)							
F. OTHER CHECKS							
*1. PA system operating properly							
2. Next power level schedule reviewed and understood							
3. Prestartup warning issued over PA system if requested by experimenters							
4. Core loading chart up to date and properly approved							
*5. Containment system operational							
G. STARTUP DATA							
1. Predicted critical shim rod position[b]							
2. Time at 100 kW[b]							
3. Shim rod position at 100 kW[b]							
4. Time at 2000 kW[b]							
5. Shim rod position at 2000 kW[b]							
H. STARTUP PERSONNEL							
1. Startup supervisor (initials)							
2. Startup operator (initials)							
3. Startup observers (initials)							

[b]*Shim rods 1-4 balanced with 5-6 at 23.0 in.*

UCN-8909 (3 5-81) PAGE 4

Example 12.8. (continued).

In addition, the supervisor in charge of the startup, upon completion of the startup, should fill in the information (personnel performing the startup) required on the reactor startup record sheet. This sheet is on the BSR panel below the key cabinet.

12.3.4. BSR reactor shutdown checklist (Example 12.9)

To ensure that all systems are properly shut down or placed in a standby status following the shutdown of the reactor, a checklist is provided. This form must be completed by the supervisor in charge of the shutdown.

BSR SHUTDOWN CHECK LIST

NOTE: The individual completing this check list should initial each item as it is completed.

	SUPERVISOR									
	DATE									
	CORE NO.									
1. Shim rod checks										
a. All rods in seat position and seat lights 'ON'										
b. All rod drives checked for proper operation (rundown)										
c. All rods "clutched" (clutch light out)										
d. Raise rod drives ∿ 6 in. for extended shutdowns										
2. Servo demand at N_L and range switch as low as possible with servo recorder on scale										
3. Log-N instrumentation shows normal decrease in neutron level. Place Log-N channel on low calibrate										
4. Reactor secondary loop:										
a. Fans in 'OFF'										
b. Pump in 'OFF'										
c. Blow-down valves closed										
d. Phosphate pump off										
e. Acid-addition system off										
f. Tower bypass valve open if outside temperature is less than, or expected to be less than, 35° F										
5. Reactor primary loop:										
a. If primary flow is to be stopped:										
(1) Adjust skimmer (lower)										
(2) Turn pump off										
(3) Open HCV-3 fully										
(4) Close valve HV-54										
(5) Open flapper valve										
(6) Check demineralizer flow										

UCN-8908
(3 5-81)

Page 1 of 2

Example 12.9.

BSR SHUTDOWN CHECK LIST (Cont'd)

b. If primary flow is to continue:									
(1) Check decay tank level									
(2) Check demineralizer flow									
6. Fission chamber inserted to give 20 counts/sec and set in 'automatic'									
7. Key switch in 'OFF' and Key remove Key locked in Key box									
8. If regulating rod drive is to be left fully withdrawn, then turn 'off' the reg rod recorder									
9. Bal. 1 → 4 Rod position at shutdown									
10. Roof Fan: ON or OFF									

UCN 9908
(3 5-81)

Page 2 of 2

Example 12.9. (continued)

13. SPECIAL PROCEDURES

13.1. Pertaining to BSR Complex

13.1.1. Authorization and documentation of changes to the system, operating manual, and/or operating instruction notebook

1. Routine changes. During the course of normal operation, it is necessary to make checks, tests, adjustments, and changes to equipment and/or systems to ensure smooth and reliable operation. This work is performed according to established procedures and may be done by verbal agreement between Reactor Operations personnel and the individual performing the work.
2. Special operating instructions. Temporary changes of procedures and/or deviations from the standard operating procedures are filed in a special "Operating Instructions Book" in the ORR control room. Instructions in this category are authorized by using form UCN-455 (Example 13.1).
3. Operating manual revisions. Revisions to the operating manual are made as required by authorization of senior members of the Reactor Operations Section and the Technical Section. All revisions are formally transmitted to personnel directly associated with the operation of the reactor, to the RORC at ORNL, and to DOE-ORO.

UNION CARBIDE CORPORATION
NUCLEAR DIVISION

OPERATING INSTRUCTIONS

DEPT. AND/OR DIV.	BLDG. OR AREA	DATE

SHIFT RECOGNITION *(Please Initial)*

A					
B					
C					
D					

Supervisor

UCN-455
(12-2-65)

Example 13.1.

4. Instrument and controls and mechanical changes (change memoranda). Important mechanical and instrumentation and controls design changes are documented by issuing change memoranda. A formalized system is used in processing the change memoranda to ensure that the proposed changes are reviewed and approved by the designated senior staff members. A permanent record of all change memoranda is kept in the Operations Division office. Copies of all change memoranda shall be sent to the Reactor Operations Review Committee and to the DOE-ORO.

   Mechanical design change memoranda. Mechanical design changes are documented by mechanical design change memoranda (Example 13.2) which may be prepared by anyone knowledgeable of a proposed change; such memoranda are identified by number and title. Each memo states the reason for the change, briefly describes the change, and lists the new drawings and procedures and the revised drawings and procedures required. Spaces are provided for the appropriate approval signatures. Space also is provided for acknowledging completion of the drawings, procedures, and field work.

   Instrumentation and Controls design change memoranda. Instrumentation and Controls design changes are documented by Instrumentation and Controls change memoranda (Example 13.3). An I&C change memo is prepared by an I&C engineer knowledgeable of the proposed change. Instrumentation and Controls change memoranda

OPERATIONS DIVISION
MECHANICAL DESIGN CHANGE MEMO

1 FACILITY | CHANGE NO.

2 CHANGE MEMO PREPARED BY | DATE

3 TITLE OF CHANGE

4 REASON FOR CHANGE

5 BRIEF DESCRIPTION OF CHANGE (ATTACH ADDITIONAL DETAIL IF NECESSARY)

6 DRAWINGS REQUIRING CHANGE | 8 PROCEDURES REQUIRING CHANGE

7 NEW DRAWINGS REQUIRED | 9 NEW PROCEDURES REQUIRED

This modification does ☐ does not ☐ involve a change in the technical specifications. If a change is involved, explain:

11 APPROVAL SIGNATURES		12 NEW DRAWINGS AND DRAWING CHANGES COMPLETED	
FACILITY SUPERVISOR	DATE	ACKNOWLEDGED BY	DATE
DEPARTMENT HEAD	DATE	13 NEW PROCEDURES AND PROCEDURE CHANGES COMPLETED	
		ACKNOWLEDGED BY	DATE
OTHER	DATE		
		14 FIELD CHANGE COMPLETED	
OPERATIONS DIVISION DIR	DATE	(ACKNOWLEDGED BY)	DATE
		(ACKNOWLEDGED BY) OPERATIONS DIVISION	DATE
15 ORNL Safety Committee Review Required ☐ Yes ☐ No		ORNL Safety Committee Review By	Date
16 DOE Review Required ☐ Yes ☐ No		DOE Review By	Date

UCN-9798
(3 7-81)

Example 13.2.

OPERATIONS DIVISION
INSTRUMENTATION AND CONTROLS DESIGN CHANGE MEMO

CHANGE MEMO NO.

1. FACILITY — DESIGN REQUEST NO.

2. CHANGE MEMO PREPARED BY — DATE

3. TITLE OF CHANGE

4. REASON FOR CHANGE

5. GENERAL DESCRIPTION OF CHANGE

6. DRAWINGS REQUIRING CHANGE — 8. PROCEDURES REQUIRING NO CHANGE

7. NEW DRAWINGS REQUIRED — 9. NEW PROCEDURES REQUIRED

10.
This modification does ___ does not ___ involve a change in the technical specifications. If a change is involved, explain:

11. APPROVAL SIGNATURES		12. NEW DRAWINGS AND DRAWING CHANGES COMPLETED	
I&C REPRESENTATIVE	DATE	(ACKNOWLEDGED BY)	DATE
I & C DEPARTMENT HEAD	DATE	13. NEW PROCEDURES AND PROCEDURE CHANGES COMPLETED	
		(ACKNOWLEDGED BY)	DATE
OTHER	DATE	14. FIELD CHANGE COMPLETED	
OPERATIONS DIVISION DIR.	DATE	(ACKNOWLEDGED BY)	DATE
		(ACKNOWLEDGED BY) OPERATIONS DIVISION	DATE
15. ORNL Safety Committee Review Required ☐ Yes ☐ No		ORNL Safety Committee Review By	DATE
16. DOE Review Required ☐ Yes ☐ No		DOE Review By	DATE

UCN-9797
(3 7-81)

Example 13.3.

are identified by number and title. Each change memo states the reason for the change, briefly describes the change, and lists the new drawings and procedures and the revised drawings and procedures required. Space is provided for the appropriate approval signatures. Space also is provided for acknowledging completion of the drawings, procedures, and field work.

14. INSTRUCTION CHECKLIST FOR THE BSR

14.1. Introduction

The Instruction Checklist (Example 14.1) is used as a guide for training reactor operating personnel, principally to ensure that all areas of the complex are covered. The checklist is also useful for periodic review of the facility. The principal sources of information to be used along with the checklist are the "BSR Operating Manual," "Drawing File," "Operating Safety Limits for the ORNL Bulk Shielding Reactor," and "Description and Safety Analysis of the 2-MW Bulk Shielding Reactor."

INSTRUCTION CHECKLIST
FOR THE BULK SHIELDING REACTOR

Contents

A. General Information on the Various Components in the BSR Complex
B. Reactor Components
C. Experiments
D. Record Keeping
E. Radiation Control
F. Emergency Action
G. Building Containment
H. Process Instrumentation
I. Secondary System
J. Questions

Example 14.1. Instruction Checklist for the Bulk Shielding Reactor

INSTRUCTION CHECKLIST FOR BSR

Date _____

Name _____

	Has Been Taught	Has Done or Made Use of
A. General Information on the Various Components in the BSR Complex		
1. Pool		
a. Dimensions and configuration	_____	_____
b. Lining		
(1) Type	_____	_____
(2) Temperature limitations	_____	_____
(3) Radiation limitations	_____	_____
(4) Chemical limitations	_____	_____
c. Water-level control		
(1) Water make-up	_____	_____
(2) Determining water loss due to leakage	_____	_____
(3) How level is monitored	_____	_____
(4) Emergency shielding for reactor pool	_____	_____
d. Water purity		
(1) Limits on various parameters		
a. pH	_____	_____
b. Resistivity	_____	_____
c. Activity		
1. Normally, when not operating	_____	_____
2. During 1-MW operation	_____	_____
3. During 2-MW operation	_____	_____
(2) Sampling points	_____	_____

Example 14.1 (continued).

	Has Been Taught	Has Done or Made Use of
e. Lowest permissible water depth	_____	_____
f. Rules about proximity of reactors physical restrictions (PCA and BSR)	_____	_____
g. Fuel storage		
(1) Underwater racks	_____	_____
(2) Be	_____	_____
(3) Vault	_____	_____
h. Emptying and filling the pool	_____	_____
i. Miscellaneous		
(1) Dam	_____	_____
(2) Fuel-handling and other tools used in the pool	_____	_____
(3) Disposition of off-shifts	_____	_____
(4) Overhead crane	_____	_____
2. Water System		
a. Schematic flow system	_____	_____
*b. Heat exchanger (2 MW)		
(1) Capacity	_____	_____
(2) Flow diagram	_____	_____
(3) Normal temperature of inlet and exit water	_____	_____
(4) Construction materials	_____	_____
*c. Demineralizer (30 gpm)		
(1) Description	_____	_____
(2) Water flow	_____	_____
(3) Regeneration	_____	_____
(4) Checks	_____	_____
(5) Resins	_____	_____
(6) Alarm on low resistance	_____	_____

*Units from old system are also available for use.

Example 14.1. (continued).

	Has Been Taught	Has Done or Made Use of
*d. Filter (200 gpm)		
(1) Pumping rate	_____	_____
(2) Flow	_____	_____
(3) Type of media	_____	_____
(4) Reason for filtering	_____	_____
(5) Skimmer	_____	_____
*e. Vacuum cleaning pump		
(1) Flow rate	_____	_____
(2) Filtering unit	_____	_____
(3) Flow diagram	_____	_____
(4) Radioactivity encountered	_____	_____
*f. ^{16}N jets		
(1) Function	_____	_____
(2) Location	_____	_____
(3) Placing in service	_____	_____
(4) When required	_____	_____
g. Flapper valve		
(1) Describe the component	_____	_____
(2) Position indicators (a) position switches (b) orifice monitoring	_____	_____
(3) Mode 1 operation	_____	_____
(4) Mode 2 operation	_____	_____
(5) Checks to ensure proper mode and position	_____	_____
h. Decay tank		
(1) Dimensions	_____	_____
(2) Baffles - purpose	_____	_____
(3) Level indicators	_____	_____
(4) Water level during 2-MW operation	_____	_____
(5) Water level during no-flow conditions	_____	_____
(6) Surge tank	_____	_____

*Units from old system are also available for use.

Example 14.1. (continued).

	Has Been Taught	Has Done or Made Use of
i. Primary cooling system		
(1) Primary pump	_____	_____
(a) Horse power	_____	_____
(b) Flow capacity (design)	_____	_____
(c) Packing gland water supply	_____	_____
(2) Orifice (main primary flow)	_____	_____
(a) Location	_____	_____
(3) Valve pit		
(a) Valve control	_____	_____
(4) Syphon - break line	_____	_____
(5) Flex hose	_____	_____
(a) Material	_____	_____
(b) Purpose	_____	_____
(c) Precautions - general	_____	_____
(d) Precautions during movement of reactor	_____	_____
(e) Satisfactory condition for flow	_____	_____
(6) Degasser tank	_____	_____
j. Secondary cooling system		
(1) Flow range during operation	_____	_____
(2) How controlled	_____	_____
(3) Pump	_____	_____
(4) Basin - level - control	_____	_____
(5) Water treatment - pH, T.S., blowdown, makeup, daily and weekly	_____	_____
(6) Fans, speeds	_____	_____
(7) Tower, capacity	_____	_____
(8) How to place in operation	_____	_____
(9) A/C pump	_____	_____

Example 14.1. (continued).

	Has Been Taught	Has Done or Made Use of
3. Bridges - Reactor, Experiment or Instrument and Mobile Catwalk		
a. Location - rules governing	_____	_____
b. Limitations on materials, equipment, etc., that are normally permitted (or not permitted) on the bridge	_____	_____
c. Repositioning the reactor bridge	_____	_____
(1) How the bridge is moved	_____	_____
(2) Reasons for moving the bridge	_____	_____
(3) Safety aspects	_____	_____
(a) Nuclear	_____	_____
(b) Non-nuclear	_____	_____
(c) Reactor power while moving	_____	_____
(d) Flex line	_____	_____
(4) Rules regarding moving	_____	_____
(a) Personnel authorized to move the bridge	_____	_____
(b) Checks to be made	_____	_____
e. Location of power cut-off switches	_____	_____
f. Physical dimensions of bridge	_____	_____
g. Weight limitations	_____	_____
4. Utilities		
a. Electrical power distribution		
(1) Normal - Clean power	_____	_____
- Normal power	_____	_____
(2) Emergency - diesel	_____	_____

Example 14.1. (continued).

	Has Been Taught	Has Done or Made Use of
b. Water supply		
(1) Potable	_____	_____
(2) Process	_____	_____
(3) Demineralized	_____	_____
c. Waste systems		
(1) Liquid		
(a) Creek	_____	_____
(b) Low level	_____	_____
(c) ILW	_____	_____
(2) Gaseous		
(a) Normal off-gas	_____	_____
(b) Pressurizable off-gas	_____	_____
d. Heating and ventilation		
(1) heaters		
(a) Pool room	_____	_____
(b) Control rooms	_____	_____
(3) Ventilating		
(a) Pool room	_____	_____
(b) Control rooms	_____	_____
B. Reactor Components		
1. Fuel Element Grid		
a. Number of positions	_____	_____
b. Size of positions	_____	_____
c. Orientation; how maintained	_____	_____
d. Distance from the floor in each pool section	_____	_____
e. Method of attachment to the bridge	_____	_____
f. Distance from the bridge	_____	_____
g. Distance under water	_____	_____

Example 14.1. (continued).

	Has Been Taught	Has Done or Made Use of
h. Over-all size	_____	_____
i. Clearance between fuel element end box and grid position	_____	_____
j. Removal from the pool	_____	_____
k. Construction material	_____	_____
l. Method of construction	_____	_____
m. Method of supporting in the grid	_____	_____
2. Fuel Elements		
a. Standard assembly		
(1) Total amount of ^{235}U in new elements	_____	_____
(2) Number of plates		
(a) Standard element	_____	_____
(b) Half-fuel element	_____	_____
(3) Weight of ^{235}U per plate	_____	_____
(4) Dimensions of composite element		
(a) Length	_____	_____
(b) Cross section	_____	_____
(c) Cooling water gap	_____	_____
(5) Dimensions of fuel plate		
(a) Length, over-all	_____	_____
(b) Length of U-Al alloy section	_____	_____
(c) Cross section (cladding, fuel thickness and construction)	_____	_____
(6) Standard loading (including orientation of element in grid)	_____	_____
(7) Average burnup rate of ^{235}U	_____	_____

Example 14.1. (continued).

	Has Been Taught	Has Done or Made Use of
b. Special fuel element for shim rods		
(1) Dimensions of composite element		
(a) Length	_____	_____
(b) Cross section	_____	_____
(c) Cooling water gap	_____	_____
(2) Dimensions of fuel plate	_____	_____
(3) Clearance	_____	_____
(4) Construction material	_____	_____
(5) ^{235}U Content	_____	_____
3. Shim Rods and the Regulating Rod		
a. General or standard location - minimum number (safety limits)	_____	_____
b. Dimensions	_____	_____
c. Extension to shim rod	_____	_____
d. Materials		
(1) Shim rods	_____	_____
(2) Regulating rod	_____	_____
e. Reactivity worth		
(1) Minimum and maximum $\Delta k/k$ per in.	_____	_____
(2) Minimum and maximum $\Delta k/k$ per in.	_____	_____
f. Guide bearings		
(1) Position	_____	_____
(2) Materials	_____	_____

Example 14.1. (continued).

	Has Been Taught	Has Done or Made Use of
g. Armature		
(1) Location	_____	_____
(2) Dimensions	_____	_____
(3) Construction materials	_____	_____
(4) Seat switch design change (1969-1970)	_____	_____
h. Shock absorber		
(1) Theory of operation	_____	_____
(2) Location	_____	_____
(3) Materials	_____	_____
i. Drive system		
(1) Gear system	_____	_____
(2) Drive motors	_____	_____
(3) Speed	_____	_____
(4) Position indicator	_____	_____
4. High-Current, Low-Voltage Magnet		
a. Overall size and configuration	_____	_____
b. Parts		
(1) Housing and core	_____	_____
(2) Magnet coil and leads	_____	_____
(a) Potting material for coil	_____	_____
(b) Insulation for leads	_____	_____
(3) Retainer washer	_____	_____
(4) Split ring	_____	_____
(5) Clutch switch and leads	_____	_____
(6) Plating material, purpose, thickness	_____	_____

Example 14.1. (continued).

	Has Been Taught	Has Done or Made Use of
c. Theory of operation		
(1) Voltage levels expected	_____	_____
(2) Normal current	_____	_____
(3) Effect of water	_____	_____
(4) Corrosion control	_____	_____
(5) Flyback voltage control	_____	_____
5. Solid State Electronics		
a. Sigma bus converter		
(1) Input voltage range	_____	_____
(2) Output voltage range		
(a) Negative voltage	_____	_____
(b) Positive voltage	_____	_____
(3) Pulse test components		
(a) Pushbutton	_____	_____
(b) Indicator lights	_____	_____
(c) Pulse duration	_____	_____
(d) Purpose of test	_____	_____
b. Dual voltage comparator		
(1) Scram comparator	_____	_____
(2) "Bus protect" comparator	_____	_____
(3) Latch lights	_____	_____
(4) Trip lights	_____	_____
(5) Normal lights	_____	_____
c. Magnet switch		
(1) Purpose	_____	_____
(2) Switching capabilities		
(a) Amperage limits	_____	_____
(b) Voltage limits	_____	_____

Example 14.1. (continued).

	Has Been Taught	Has Done or Made Use of
d. Magnet power supply		
(1) Voltage range	_____	_____
(2) Amperage range	_____	_____
(3) Normal output for BSR	_____	_____
(4) AC power from slow scram bus	_____	_____
e. Modular power supply		
(1) Regulated voltages	_____	_____
(2) Power for comparator	_____	_____
(3) Future capabilities	_____	_____
6. Nuclear Instrumentation		
a. Count-rate channel		
(1) Fission chamber		
(a) Type	_____	_____
(b) Dimensions	_____	_____
(c) Drive system	_____	_____
(d) ^{235}U content	_____	_____
(e) Normal location	_____	_____
(f) Reactivity effect upon moving	_____	_____
(g) Length of life	_____	_____
(h) Frequency of replacement	_____	_____
(i) PHS curve for chamber	_____	_____
(aa) Frequency for checking the curve	_____	_____
(bb) Importance of check	_____	_____
(2) Pre-amplifier	_____	_____
(3) Pulse amplifier	_____	_____

Example 14.1. (continued).

	Has Been Taught	Has Done or Made Use of
(4) Scaler		
(5) Count-rate meter		
(6) Count-rate recorder		
(7) Count-rate period recorder		
b. Log-N Channel		
(1) Log-N Chamber		
(a) Type and frequency of compensation		
(b) Negative voltage inhibit		
(c) Dimensions		
(d) Drive system		
(e) Normal location		
(f) Length of life		
(g) Frequency of replacement		
(2) Log-N Amplifier		
(3) Fast period amplifier		
(4) Period sigma amplifier		
(5) Log-N recorder		
(6) Log-N period recorder		
c. Safety Channels		
(1) Safety chambers		
(a) Type		
(b) Dimensions		
(c) Drive system		
(d) Normal location		
(e) Frequency of replacement		
(2) Sigma amplifiers		

Example 14.1. (continued).

	Has Been Taught	Has Done or Made Use of
(3) Safety recorders	_____	_____
(4) Mode 1 operation	_____	_____
(5) Mode 2 operation	_____	_____
d. Trouble monitor	_____	_____
e. Servo Channel		
(1) Servo Chamber		
(a) Type	_____	_____
(b) Dimensions	_____	_____
(c) Drive system	_____	_____
(d) Normal location	_____	_____
(e) Frequency of compensation	_____	_____
(f) Negative voltage inhibit	_____	_____
(2) Micromicrommeter (Panel B)	_____	_____
(3) Servo recorder (Panel C)		
(a) 50% switch	_____	_____
(4) Programmable controller	_____	_____
(a) Signal conditioner amplifier	_____	_____
(b) Programmer controller and calculator	_____	_____
(c) ΔT isolation amplifier	_____	_____
(d) Flow isolation amplifier	_____	_____
(e) Heat power recorder (Panel G)	_____	_____
(f) Servo control panel (Panel B)		
(aa) Demand (Mode 1 and Mode 2 operation)	_____	_____
(bb) Setpoint	_____	_____
(cc) Flux	_____	_____

Example 14.1. (continued).

	Has Been Taught	Has Done or Made Use of
(dd) Withdraw, insert light	_____	_____
(ee) Enter setpoint	_____	_____
(ff) Stop demand	_____	_____
(gg) Battery low light	_____	_____
(g) Heat power panel (Panel B)		
(aa) Heat power (MW)	_____	_____
(bb) Flux calibration, gain = 1.00	_____	_____
(cc) Flux calibration	_____	_____
(5) Local toggle switch, vernier (local console)	_____	_____
(6) Remote toggle switch, setback (remote console)	_____	_____
(7) Control rod	_____	_____
(8) Servo limit switches	_____	_____
7. Neutron Sources		
a. Types	_____	_____
b. Hazards	_____	_____
c. Precautions	_____	_____
d. Responsibility	_____	_____
C. Experiments		
1. Connection to Reactor Safety Circuits	_____	_____
2. Reactivity Worth		
a. Total allowed (operating safety limits)	_____	_____
b. Method for determining worth	_____	_____
3. Responsibility For:		
a. Approval for operating experiments	_____	_____
b. Operating the experiments	_____	_____
4. Determining Experiment Failures	_____	_____

Example 14.1. (continued).

	Has Been Taught	Has Done or Made Use of
D. Record Keeping		
1. Core loading		
a. Responsibility	_____	_____
b. Burnup calculations	_____	_____
c. Flux mapping	_____	_____
d. Past core configurations	_____	_____
e. Techniques for establishing new configuation and/or loadings	_____	_____
2. Operating Data		
a. Daily operation	_____	_____
b. Log book	_____	_____
c. 12 to 8 shift checks (Example 14.2)	_____	_____
d. 8 to 4 shift checks (Example 14.3)	_____	_____
e. 4 to 12 shift checks (Example 14.4)	_____	_____
f. Area radiation survey (Example 14.5)	_____	_____
3. Reactor control changes		
a. Responsibility for issuance	_____	_____
b. Maintaining file	_____	_____
E. Radiation Control		
1. Radioactivity released to building atmosphere		
a. Sources	_____	_____
b. Normal level when reactor is operating at 1 MW and 2 MW	_____	_____
c. At other power levels	_____	_____
2. Radiation and contamination monitoring		
a. Monitrons		
(1) Location	_____	_____
(2) Number	_____	_____
(3) Remote readout	_____	_____
(4) Annunciator tie-in	_____	_____
(5) Alarm point	_____	_____

Example 14.1. (continued).

	Has Been Taught	Has Done or Made Use of
b. Continuous air monitors		
(1) Location	_____	_____
(2) Number	_____	_____
(3) Remote readout	_____	_____
(4) Annunciator tie-in	_____	_____
(5) Alarm point	_____	_____
c. Pool outlet radiation monitor		
(1) Location	_____	_____
d. Off-gas radiation monitor		
(1) Location	_____	_____
e. Building ventilation duct	_____	_____
f. Log gamma radiation monitor	_____	_____
3. Lab facility radiation and contamination warning system	_____	_____
F. Emergency Actions		
1. Excessive radiation and/or contamination	_____	_____
2. Fire alarms	_____	_____
3. Building Evacuations	_____	_____
4. Building occupants (other than operations personnel)	_____	_____
G. Building containment		
1. Automatic closures in building	_____	_____
2. Inter-connecting duct, filters, and stack area	_____	_____
3. Normal flow conditions and CFM	_____	_____

Example 14.1. (continued).

	Has Been Taught	Has Done or Made Use of
4. Containment flow conditions and CFM	_____	_____
5. Cell vent low flow	_____	_____
6. Checks for "in-flow" currents	_____	_____
7. What conditions require building containment	_____	_____
8. How is this established		
a. Automatically	_____	_____
b. Manually	_____	_____
H. Process Instrumentation (ORNL Dwg. RC 15-1-3)		
1. Primary Instrumentation		
a. Temperature measurements		
(1) Core inlet: TE 16-1	_____	_____
(2) Core inlet: TE 16-2	_____	_____
(3) Pool temperature, near primary outlet: TE 16-3	_____	_____
(4) Pool temperature, near primary outlet: TE 16-4	_____	_____
(5) Differential temperature across core: Mode 2 operation	_____	_____
(a) How and where monitored (TdE-17A)	_____	_____
(b) How and where displayed (TdE-17B)	_____	_____
(c) Control and safety action	_____	_____
(d) Significance of	_____	_____
(6) Pool temperatures		
(a) Where and how monitored (TE 16-9; TE 16-10; TE 16-11; TE 16-12)	_____	_____

Example 14.1. (continued).

	Has Been Taught	Has Done or Made Use of
(b) Where and how displayed	_____	_____
(c) Significance of	_____	_____
(7) Inlet to heat exchanger: (TE 16-5)	_____	_____
(8) Outlet from heat exchanger: (TE 16-6)	_____	_____
(9) Where displayed	_____	_____
(10) Significance of	_____	_____
2. Flow indication and pressures		
a. Differential pressure across core		
(1) Pds/22A - closed for normal ΔP; open on low ΔP	_____	_____
(2) Pds/22B - closed for normal ΔP; open on low ΔP	_____	_____
(3) PdA/22 - alarm for abnormal (low) ΔP	_____	_____
(4) PdR/22 - readout for ΔP	_____	_____
b. Flow element (FE-10)		
(1) FT/10 - flow transmitter	_____	_____
(2) FS/10A - open for low flow	_____	_____
(3) FS/10B - closed for low flow	_____	_____
(4) FA/10 - alarm for low flow	_____	_____
(5) FR/10 - readout for flow	_____	_____
c. Pressure indication		
(1) PI-19A: upstream side of control valve on inlet line	_____	_____
(2) PI-19B: discharge side of circulating pump	_____	_____

Example 14.1. (continued).

	Has Been Taught	Has Done or Made Use of
3. Level indication		
a. Pool		
(1) LS/1B - low level for alarm (2 ft)	_____	_____
(2) LS/1C - low level for alarm (4 ft)	_____	_____
(3) LS/1D - low level for alarm (4 ft)	_____	_____
(4) LS/1A - low level for alarm (2 ft)	_____	_____
b. Decay tank		
(1) LT-4 - level transmitter for readout	_____	_____
(2) LS-4A - high level switch for alarm	_____	_____
(3) LS-4B - low level switch for alarm	_____	_____
(4) LI-4A	_____	_____
(5) LI-4B	_____	_____
4. Radiation instrumentation		
a. RE-5 - detector on outlet line from pool		
(1) RS-5 switch on monitor	_____	_____
(2) RS-5 - signal to alarm monitor	_____	_____
b. RE-18 - detector on off-gas line from decay tank		
(1) RS-18 - switch in monitor	_____	_____
(2) RA-18 - signal to alarm annunciator	_____	_____
5. Flapper valve		
a. A scram results if valve is not fully opened or fully closed		
(1) ZS-2A - position switch monitoring	_____	_____
(2) ZS-2B - fully open; produces scram when not fully open	_____	_____

Example 14.1. (continued).

	Has Been Taught	Has Done or Made Use of
(3) ZS-2C - position switch monitoring	_____	_____
(4) ZS-2D - fully closed; produces scram when not fully closed	_____	_____
(5) ZA-2A - alarms when not fully open	_____	_____
(6) ZA-2B - alarms when not fully closed	_____	_____
6. Filter by-pass		
a. Pressure indicator		
(1) PI-19C - outlet side of filter	_____	_____
(2) PI-19D - inlet side of filter	_____	_____
b. Flow indicator		
(1) FE-19 - flow element	_____	_____
(2) FI-19 - flow indicator (waste meter)	_____	_____
I. Secondary System		
1. Temperature measurements		
a. Inlet to heat exchanger TE-16-7	_____	_____
b. Outlet from heat exchanger TE-16-8	_____	_____
c. Temperature control system:		
(1) Primary to secondary - temperature of primary is input to valve control (TCV-13); TS-13, TT-13, TA-13, TR-13, TC-13	_____	_____
(2) TT-15 - temperature of tower basin which is input for fan controls	_____	_____

Example 14.1. (continued).

	Has Been Taught	Has Done or Made Use of
2. Pressure indication		
a. PI-21 - inlet pressure to heat exchanger which is also discharge pressure of secondary pump	_____	_____
b. PI-13 - on 100 psi air supply to (TCV-13) control valve on secondary line exit of heat exchanger	_____	_____
c. PI-15 - on 100 psi air supply to TT-15 from tower basin temperature	_____	_____
3. Flow indication		
a. FE-11 - flow indication on exit to heat exchanger	_____	_____
(1) FT-11 - flow transmitter	_____	_____
(2) FI-11 - flow indicator	_____	_____
J. Questions		
1. What information is given by the shim-rod-condition (and/or -position) lights?	_____	_____
2. What is the function of the No. 4 shim-rod switch in the following reactor conditions:		
a. in manual?	_____	_____
b. in servo?	_____	_____
3. When can the servo on-off switch not be used; i.e., when will its use produce no action?	_____	_____
4. What are the functions of the preferred shim rod?	_____	_____
5. Over what range (watts and decades) do the following instruments work?		
a. The servo system	_____	_____
b. The counting-rate channel	_____	_____
c. The log-N channel	_____	_____
d. The level-safety channels	_____	_____

Example 14.1. (continued).

	Has Been Taught	Has Done or Made Use of
6. What type source is routinely used at the BSR?	_____	_____
7. Under what conditions does a midrange lockout exist?	_____	_____
8. What conditions are required to obtain servo?	_____	_____
9. What conditions are required to obtain instrument start?	_____	_____
10. What conditions are required to obtain run?	_____	_____
11. In what recorders are switches having the following setpoints and what are the functions of these switches?		
a. Negative 100 s period	_____	_____
b. Positive 100 s period	_____	_____
c. Positive 25 s period	_____	_____
d. Positive 7 s period	_____	_____
12. What happens if a positive period of 1 s is obtained? What instrument causes this action?	_____	_____
13. What is the function of the micromicro-ammeter? How does this differ from the function of the micromicroammeter at the ORR?	_____	_____
14. Fission-chamber (or counting-rate) channel:		
a. Why does this channel have to be "on scale" to obtain start?	_____	_____
b. What is the minimum counting rate required for startup?	_____	_____
c. Why is it necesary to have a counting-rate channel?	_____	_____

Example 14.1. (continued).

	Has Been Taught	Has Done or Made Use of
15. What is the relationship between the scaler and the CRM? How can one be checked against the other?	_____	_____
16. Magnet control bin		
a. What is the purpose of the sigma bus converter?	_____	_____
b. What is the normal N_L readout of the sigma bus meter?	_____	_____
c. What is the significance of a N_L readout of the sigma bus meter that is too low? Too high?	_____	_____
d. What does the dual voltage comparator compare?	_____	_____
e. List five ways that the magnet switch current is reduced to zero.	_____	_____
f. Compare the function of the magnet control bin to that of the magnet amplifiers at the ORR.	_____	_____
g. Why should the magnet control bin solid state electronics be more desirable to that of the ORR magnet amplifiers?	_____	_____
17. What is the purpose of the level-safety channels?	_____	_____
18. What is the purpose of the period-safety channel?	_____	_____
19. How is the reactor manually scrammed?	_____	_____
20. List the parameters and their setpoints which automatically result in the following actions.		
a. Slow scram	_____	_____
b. Reverse	_____	_____
c. Setback	_____	_____
21. How often is it necessary to calibrate the log-N amplifier? The log-N channel?	_____	_____

Example 14.1. (continued).

		Has Been Taught	Has Done or Made Use of
22.	How often is it necessary to check and adjust the magnet currents?	_____	_____
23.	How often is it necessary to check the magnet drop current, magnet release time, shim-rod time-of-flight, and drop points?	_____	_____
24.	What is the purpose of the annunciator panel? Discuss each annunciator station giving detailed information about the origin and meaning of the signals.	_____	_____
25.	What is the purpose of the startup checklist?	_____	_____
26.	What constitutes the regulating rod at the BSR?	_____	_____
27.	What does the servo demand indicate? How is this indication different from the servo demand indication at the ORR?	_____	_____
28.	Describe the ^{16}N jet system. What is the purpose of this system?	_____	_____
29.	What is the difference between a fast scram and a slow scram?	_____	_____
30.	Why are both a fast scram and a slow scram provided in the BSR instrumentation?	_____	_____
31.	When balancing shim rods, what instrument (or instruments) should be watched? Why?	_____	_____
32.	What are the limits on shim-rod magnet-release time?	_____	_____
33.	What are the limits on shim-rod time-of-flight time?	_____	_____
34.	What action should be taken when a "shim request" annunciator alarm is received?	_____	_____

Example 14.1. (continued).

		Has Been Taught	Has Done or Made Use of
35.	When is it permissible to operate with the "jet off" annunicator in the alarm condition?	_____	_____
36.	What are eight of the things which are to be checked in the pool before starting to take the reactor critical?	_____	_____
37.	How is the period scram circuit tested?	_____	_____
38.	How are the level-safety scram circuits tested?	_____	_____
39.	How is the fission-chamber channel checked before each run?	_____	_____
40.	What is the purpose of the TV monitoring system?	_____	_____
41.	What is the purpose of the BSR sound surveillance system?	_____	_____
42.	Explain how the BSR remote control system works.	_____	_____
43.	Explain and describe what action the ORR desk operator can take both when the BSR is being operated locally and when it is being operated remotely, i.e., from the ORR.	_____	_____

Date: _____

This Checklist Applies for: _____

Checked Out By: _____

Example 14.1. (continued).

BSR ROUTINE CHECK SHEET

12 - 8 SHIFT

STARTING DATE _____ SHIFT _____

CHECKED BY (Initials)							
	SAT.	SUN.	MON.	TUE.	WED.	THUR.	FRI.
All doors leading to pool area and control room are locked							
Check special instruction clipboard							
Pool water level is adequate. Record level on clipboard, SE corner of pool							
Skimmer operating properly							
CAM's and Monitrons operating properly							
CAM's and Monitrons checked with source							
Cutie pies and survey meters in proper locations							
Evacuation horn tested							
N_2 supply and pressure for evacuation horn checked							
Hand cranks on reactor, reactor bridge, and instrument bridge chained and locked							
Check level of D_2O in overflow bottles to east D_2O tank							
Off-gas hood port holes for D_2O overflow bottle are unobstructed							
Overhead crane and mobile catwalk bridge switches locked in off position when not in use							
Fuel-handling tools (PCA and BSR) locked in place when not in use							
Experiment panels checked and services completed							
Evacuation package checked							
All yellow hot cans emptied							
Area inspection including core, pumps, fans, motors (Log abnormalities)							
Secondary pH, phosphate concentration, and total solids checked and logged if secondary is operating							
Check tower fans for vibration and oil level when secondary is operating							
Demineralizer integrator reading 12:01 a.m.							
Turn all steam tracing, pH probe hutment heater, and primary flow Δp cell hutment heater on when outside temperature drops to $\sim 35^0$ F							
	REVIEWED AND APPROVED BY ENGINEER						

UCN-8100B
(3 5-81)

Example 14.2.

BSR ROUTINE CHECK SHEET

8 - 4 SHIFT

STARTING DATE | SHIFT

CHECKED BY (Initials)							
	FRI.	SAT.	SUN.	MON.	TUE.	WED.	THU.
All doors leading to pool area and control room are locked							
Check special instruction clipboard							
Pool water level is adequate. Record level on clipboard at southeast corner of pool							
Skimmer operating properly							
CAM's and Monitrons operating properly							
Cutie pie and survey meters in proper location							
Record pool room negative pressure – southeast							
Record pool room negative pressure – northwest							
Pool room roof fan "on" or "off"							
Hand cranks on reactor, reactor bridge, and instrument bridge chained and locked							
Check level in overflow bottles on east D_2O tank							
Off-gas hood port holes for D_2O overflow bottle are unobstructed							
Overflow bottle off-gas hood Drierite checked							
KWH Meter Reading							
Pressurize DP cell housing							
Overhead crane and mobile catwalk bridge switches locked in off position when not in use							
Fuel handling tools (PCA and BSR) locked in place when not in use							
Experiments checked and services completed							
Area inspection including core, pumps, fans, motors (log abnormalities)							
Control room portable emergency light checked							
Control room emergency lights "bright"							
Pool room emergency light "dim"							
Magnet bin nos. 1, 2, and 3 components indicating normal conditions.							
Modular power supply voltage monitors checked if reactor is operating							
BSR Radiation Survey (To be taken when reactor is operating)							

UCN-8100
(3 3-82)

(Continued on back of page)

Example 14.3.

BSR ROUTINE CHECK SHEET

8 - 4 SHIFT

	FRI.	SAT.	SUN.	MON.	TUE.	WED.	THU.
Supplies inventoried and orders placed for items needed							
Check sump pump in old vault for proper operation							
Check tower fans for vibration and oil level if secondary is operating							
Secondary pH, phosphate concentration, and total solids checked and logged when secondary is operating							
Secondary pH probe filter turned one complete turn and flushed							
Secondary water counts taken and logged when operating							
Tower treatment added							
pH and resistance on demineralizer inlet and exit (daily)							
Water counts on demineralizer inlet and exit if reactor is operating							
Safety Showers Checked: 1. Secondary cooling tower 2. BSR pump house							
Cell ventilation pressure drop readings							
Turn all steam tracing, pH probe hutment heater, and primary flow Δp cell hutment heater on if outside temperature drops to < 35° F							

REVIEWED AND APPROVED BY ENGINEER

Example 14.3. (continued)

BSR ROUTINE CHECK SHEET

4 - 12 SHIFT

STARTING DATE | SHIFT

CHECKED BY (Initials)							
	WED.	THUR.	FRI.	SAT.	SUN.	MON.	TUE.
All doors leading to pool area and control room locked							
Check special instruction clipboard							
Pool water level is adequate. Record level on clipboard at southeast corner of pool							
Skimmer operating properly							
CAM's and Monitron's operating properly							
Cutie-pies and survey meters in proper locations							
Hand cranks on reactor, reactor bridge, and instrument bridge chained and locked							
Check level in overflow bottles on east D_2O tank							
Off-gas hood port holes for D_2O overflow bottle are unobstructed							
Overhead crane and mobile catwalk bridge switches locked in off position when not in use							
Fuel-handling tools (PCA and BSR) locked in place when not in use							
Experiment panels checked and services completed							
Area inspections including core, pumps, fans, motors (Log abnormalities)							
Secondary pH, phosphate concentration, and total solids checked and logged if secondary is operating							
Check tower fans for vibration and oil level if secondary is operating							
Turn all steam tracing, pH probe hutment heater, and primary flow Δp cell hutment heater on if outside temperature drops to ~35° F							

UCN-8100A
(3 5-81)

REVIEWED AND APPROVED BY ENGINEER

Example 14.4.

BSR AREA RADIATION SURVEY

PERFORMED BY

DATE

TIME

REASON

NOTE: A survey meter (G-M counter) which will read a maximum of 20 mr/hr shall be used for this survey with a cutie pie used when the radiation level is greater than 20 mr/hr.

LOCATION			PRE-SET POINT RAD. READ. (mr/hr)	MAXIMUM BACKGROUND READING (mr/hr)
1. Control Room	Control Console			
2. Reactor Bay	Walkways	East		
		West		
		North		
		South		
	Over Reactor (at bridge)			
	Skimmer System Filter Columns			
3. Pump House	Primary Pump Inlet			
	Demineralizer - North of Shield Wall			
	Demineralizer - Cation			
	Demineralizer - Anion			
	Heat Exchanger			
	Filter Column			
4. Outside Area	Decay Tank			
	Degasser Tank			
	NOG Catch Tank			
	Manhole for Primary Flow Orifice			
5. Lab Area	South Lab and Equipment Room			
	West Lab - North Section			
	West Lab - South Section			
6. Shops	Instrument Shop			
7. Second Floor	Hallway			

UCN-9145
(3 4-69)

Example 14.5.

15. MAINTENANCE MANAGEMENT AT THE BSR

15.1. Introduction

The BSF consists of the following buildings:

3009 - BSR Pool Drain Pump Room

3010 - BSR Building

3117 - BSR Cooling Tower

3119 - BSR Primary Pump House

Maintenance of the BSR is the responsibility of the reactor supervisor and his staff in a typical line organization. A block diagram showing the line of responsibility is depicted in Fig. 15.1. He may delegate authority to a supervisor for coordinating the work with the appropriate groups as shown below:

1. Plant and Equipment Division. Responsible for performing the maintenance work on mechanical and electrical equipment.
2. Instrumentation and Controls Division. Responsible for performing the maintenance work on instrumentation.
3. Inspection Engineering Section. Responsibile for performing the inspection of welds and critical materials, and for all other nondestructive testing. Also responsible for inspection of filters, pressure vessels, and hoisting and other specialized equipment.

In addition, the reactor supervisor, through his staff, is responsible for:

1. Setting up a program of routine maintenance and in-service inspection and scheduling maintenance during shutdowns in coordination with the Plant and Equipment, Instrumentation and Controls, and Inspection Engineering groups.

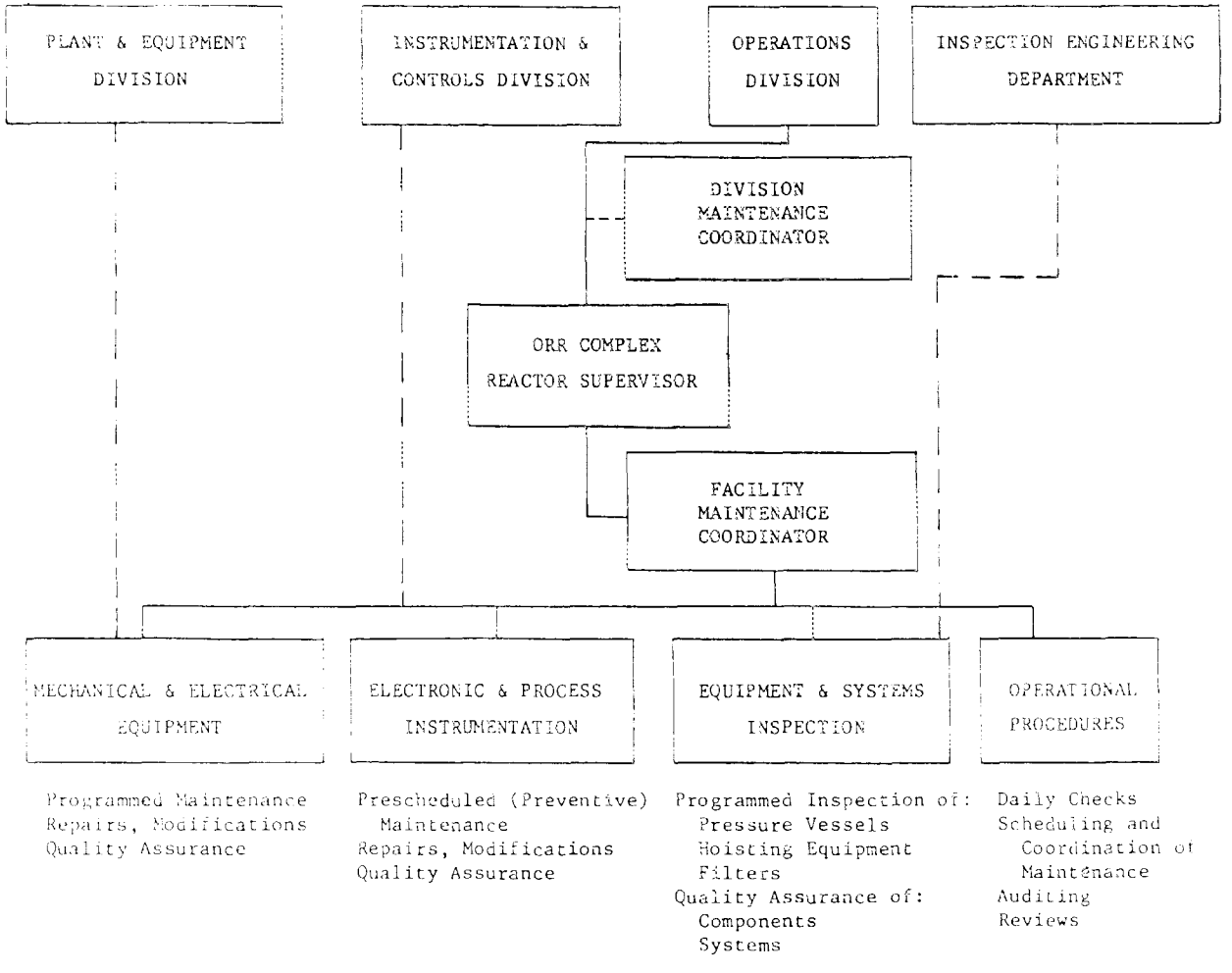

Fig. 15.1. Line of maintenance responsibility.

2. Preparing certain maintenance and inspection procedures which cannot be disassociated from operation, such as that on reactor components which are highly radioactive.
3. Auditing the maintenance performed by the above groups during work execution, inspecting completed work, and testing prior to operation. (Functional tests of the equipment and procedures are also used to detect any deficiencies prior to operations.)
4. Making regular reviews of operating and maintenance experience records to determine where maintenance procedures need to be written, upgraded, or changed.
5. Obtaining engineering assistance as needed for developing designs, specifications, procedures, and inspection requirements for special jobs.
6. Maintaining an adequate inventory of spare parts and making certain that the spare parts meet the applicable specifications if purchased, or, if fabricated, that the applicable specifications for materials and inspection are adhered to.

15.2. Mechanical and Electrical Maintenance

15.2.1. Scheduling

All routine maintenance of this type has been put on a computerized scheduling-and-auditing system called "programmed maintenance" which is in effect throughout the Laboratory and is described in report ORNL/TM-2161. The equipment inventory, route layout, analysis of manufacturer's maintenance data, frequency of scheduling, etc., were completed through the combined efforts of members of the Plant and Equipment Division and the Operations Division.

The schedule was selected to be compatible with the operational activities of the facility. Each week, IBM cards covering the routine maintenance to be done the following week are sent to the P&E maintenance supervisor responsible for doing the work; the supervisor assigns the work (gives the cards) to the appropriate mechanics. Identical cards marked "information only" are sent to the facility maintenance coordinator for review; he plans for any necessary equipment shutdowns and decides whether a more detailed inspection and/or repair is needed.

Initially, manufacturers' recommendations are used to determine the frequency of the performance of this maintenance, and adjustments of the frequency are made based upon the experience and the accessibility of components. Most routine preventive maintenance can be done while the facilities are in operation; however, some must be scheduled to be done while the systems are shutdown. Since facility shutdowns cannot be predicted accurately over a long period of time, these routine maintenance jobs must have a flexible schedule which can be altered if feasible and prudent to do so. If schedule changes are warranted, such changes are approved by the operating group.

As experience is gained, scheduled maintenance frequency intervals can be decreased or increased as necessary. Periodic reviews of records of routine maintenance, equipment performance, and equipment failures are made by the reactor supervisor's staff. With the aid of lubrication experts and Plant and Equipment Division personnel, decisions are made relating to schedule changes.

15.2.2. Procedures

In general, procedures used to maintain equipment purchased from manufacturers outside the Laboratory are patterned after those recommended by the manufacturer of the equipment. Operating and maintenance instruction books are furnished originally by the manufacturers and are supplemented with procedures based on operating history. If any repetitive failure is experienced with the equipment, the manufacturer may be contacted and his advice solicited in an effort to prevent further failures. In some cases, the manufacturer's representative may be brought to the facility as a consultant.

Procedures used to maintain equipment built locally by the Laboratory are available in the office of the facility maintenance coordinator. Procedures covering critical items are included in this BSR operating manual, ORNL/TM-2676/R1. In the preparation of these procedures, the designer of the equipment is consulted and is asked to approve the completed procedure. In some cases, the designer himself is responsible for writing the procedure. Such a descriptive procedure concerning the control-rod-drive mechanism was prepared by the designer and has been used effectively by maintenance personnel of the Plant and Equipment Division and the reactor supervisor and his staff.

In conjunction with these procedures, a checklist is provided which details critical component dimensions and conditions. Tolerances are given as a guide to the mechanic and his supervisor to help them determine whether or not a particular component is acceptable for use.

15.2.3. Documentation

All routine preventive maintenance which is scheduled on IBM cards is documented on the IBM cards themselves. For each maintenance job, an IBM card is sent to the P&E maintenance supervisor, who in turn distributes the card to the appropriate mechanic. When the work is completed, the mechanic initials and dates the card and returns it to his supervisor. If the P&E maintenance supervisor is satisfied that the work has been performed, there is no further inspection of the work. If the craftsman has run into unusual problems, or if he has left work undone, the supervisor will check on conditions himself - he may have to reassign the card to another craft or he may initiate a repair order that exceeds the requirements of routine preventive maintenance. The judgment of the craftsman is depended upon for most of the routine work and the supervisor spot checks to audit the effectiveness of the service performed. When the work is complete, a card (different from the IBM schedule card) is returned to the P&E programmed maintenance office. The facility maintenance coordinator spot checks a sufficient number of jobs to assure himself that the work is being done as specified.

For nonroutine maintenance jobs, records are kept which show the equipment malfunction, inspection report, details of repair, and any unusual problems encountered. In addition, a list of all new parts installed and the condition of the old parts is recorded. The cause of the equipment failure and recommended preventive measures are also recorded on the maintenance record. This maintenance record includes the date of

the repairs, the name of the mechanic who performed the work, the signature of the mechanic's supervisor, and the facility maintenance coordinator's signature. Information relating to services performed is stored on magnetic tape (tape is held at the Computer Technology Center at Oak Ridge Gaseous Diffusion Plant) providing a complete history of service maintenance on all components. Procedures have been established which permit the last ten service calls of the service history on any specified item to be printed out immediately (<1 h required from request to delivery). A complete history is also available, but the time required from request to print-out is much longer.

15.2.4. Control

The design and fabrication of new or replacement components and the maintenance of existing equipment is accomplished under the ORNL Quality Assurance Program. During the design of the facility, the design engineer issues a complete set of engineering drawings for each system. These drawings cover the types of materials that were used, the certifications required for the materials, the welding techniques, and the welding inspections required.

Engineering assistance is obtained from the General Engineering and/or Engineering Technology Divisions for the solution of design problems, for effecting modifications, and for designing new components. When the design phase of a job affecting pressure systems is finished, the complete package is reviewed and approved by a principal engineer who is an expert in the interpretation of the ASME Boiler and Pressure Vessel Codes and the RDT Standards. A work order is then issued to initiate the job.

The field engineer, a member of the Plant and Equipment Division, is responsible for providing to the shops and/or the field craftsmen the proper materials for each job. He must assure himself that these materials are used throughout the job as specified. The field engineer is also responsible for ensuring that qualified craftsmen and proper techniques are used. For example, proper welding techniques and welders formally tested (proven capability to produce welds that meet or exceed quality specifications of the ASME Boiler and Pressure Vessel Code, Section IX) in the P&E qualification program are used; a qualifed welding inspector approves the work. The field engineer is assisted in accomplishing these responsibilities by Inspection Engineering personnel.

All spare and replacement reactor components are fabricated according to the original or revised drawings under the ORNL Quality Assurance (QA) Program. No mechanical changes are made without official approval. Mechanical changes are documented by issuance of a "Mechanical Design Change Memo" (Example 13.2, page 13-4) which requires several levels of approval by members of the Operations Division and an engineer from the appropriate design group. The mechanical change memo authorizes a change to be made; design work, approved drawings, and the necessary procedures are provided by the appropriate design group. For very large jobs, a formal overall plan is developed and may include a PERT (computer-developed critical path) schedule.

The BSR has two levels of essentiality in regard to quality assurance. These are the primary system and the secondary system. Specifications for each of these systems are different

in regard to the types of materials, certification of material, welding specifications, and welding inspections. It is the responsibility of the reactor supervisor through his staff (usually the facility maintenance coordinator) to ensure that all work on each system meets the appropriate specifications.

15.2.5. Auditing

As the work is completed, the P&E maintenance supervisor sends a card indicating the work performed to the P&E programmed maintenance office for check of completion of work and audit.

Repair of equipment is audited by Plant and Equipment supervision during performance of the work and by operating personnel. Inspection is usually made by the facility maintenance coordinator who must give his approval before the repair is considered completed. The P&E field engineer and/or maintenance supervisor are also responsible for inspecting the work as it is being done to ensure that it meets the required specifications.

15.3. Electronic and Process Instrumentation

Instrument maintenance procedures for the BSR are on file in the area field office of the Reactor Controls Section of the Instrumentation and Controls Division.

The inventory of spare parts for the electronic and process instrumentation is maintained by supervision of the field crew of the Instrumentation and Controls Division. The criteria used in selecting parts for inventory are based on two levels of essentiality.

15.3.1. Category I - minimum control and safety instrumentation required for startup and continuity of operation

Instruments which fall into this category are those which, if faulty, will prevent the restarting of the reactor. For these channels, redundancy is followed; i.e., a one-for-one replacement is in inventory, usually in the form of spare chassis or components. These are stocked in the instrument repair shop at the facility. Spare parts, such as vacuum tubes and resistors, are available from the ORNL Electronic Stores. Special items not held in inventory at ORNL Electronic Stores are stocked by field supervision of the Instrumentation and Controls Division in the instrument shop of the facility.

15.3.2. Category II - other instrumentation not falling into Category I

Instruments included here comprise systems which are not related to reactor safety and control, e.g., pressure switches that monitor the water level in the basin of the cooling tower. Component parts necessary for repair of items in this category are maintained in ORNL Stores or are available as needed from the manufacturer's representative in the area. The waiting period for delivery is generally short, and a substitute monitoring unit suffices as a replacement for the faulty one. Continuity of operation of units in this category is not critical for reactor safety and operation.

All replacement components and/or parts have reliability equal to, or greater than, those originally used. This is verified by adhering to the original design specifications.

15.4. Inspection of Specialized Equipment

All pressure vessels, filters, and hoisting equipment are inspected routinely by personnel of the Inspection Engineering Section, an independent group with responsibility for providing quality control of these items. The scheduling and reporting of these inspections have been programmed for computer control; the schedule was selected to be compatible with the operational activities of the operating division. The reactor supervisor works with the Inspection Engineering Section to accomplish the inspections.

Work of a nonroutine nature in changing components and/or systems is subjected to engineering evaluation to ensure that the integrity is equal to, or greater than, the initial installations. For example, if penetrations to lines or pressure vessels are required, Inspection Engineering evaluates the components to be used and the type and quality of welds and ensures that the installation technique conforms to approved ORNL MET standards. In addition, a change in components reflected in the spare parts inventory is evaluated and approved by Inspection Engineering.

The Inspection Engineering Section has issued Manual S to document the nondestructive inspection procedures and the certified personnel used as part of the Laboratory's Quality Assurance Program. The procedures comply with the requirements of the RDT Standards and Section III of the ASME Boiler and Pressure Vessel Code. A training program has been in effect for two years to qualify and certify inspectors to the Society for Nondestructive Testing Practices, SNT-TC-1A, to perform liquid penetrant, radiographic, ultrasonic, and magnetic particle examination of materials and welds. These procedures and inspectors are used for all inspection operations relative to nuclear reactors and associated equipment.

In addition to the above certification program, several Inspection Engineering Section personnel have successfully completed the boiler and pressure vessel inspector training course of the Travelers Insurance Company and received a passing grade and a Certificate of Competency from the State of Tennessee Department of Labor, Division of Boiler and Pressure Vessel Inspection.

15.5. Operational Maintenance Activities

Since the BSR has the capability of operating continuously (24-h day, seven-day week), the burden of routine inspection and surveillance of operating equipment is borne by the facility operating group. This equipment is inspected at various intervals, depending upon its importance. During operation, inspections are made on hourly, shift (8 h), daily, and weekly schedules. This type of inspection cannot be disassociated from routine operation. For example, when a reactor operator is making his operating checks, he is also required to inspect the equipment for malfunction or possible malfunction. Usually, if a malfunction of operating equipment is discovered, a standby unit is placed in service while the disabled equipment is being repaired. In this manner an almost continuous surveillance is made. The operating group does not attempt to make repairs when these malfunctions are discovered. Instead, they submit work requests to the facility maintenance coordinator who schedules the repair work according to the importance of the equipment and its relationship with the overall maintenance schedule; for example, for a breakdown when a standby unit is available, a lower priority is assigned the repair. If no standby equipment is available, repairs are usually made immediately. For this, a work request (Plant & Equipment Work Request as shown in Example 15.1) is written

PLANT & EQUIPMENT WORK REQUEST

UCN-4665
(3 12-80)

ORIGINATOR	PHONE NO.		DATE WRITTEN	DATE REQUESTED	JOB NUMBER
APPROVED BY	BUILDING	MAIL STOP	ACCOUNT NUMBER	WORK ORDER NUMBER	A-4434

WORK PERMITS REQD.: ☐ NONE ☐ ELECTRICAL ☐ EXCAVATION ☐ SAFETY ☐ RADIATION ☐ OTHER

WORK DESCRIPTION: (WHAT, WHERE, WHY, HOW) SPECIAL Q_A ACTIONS ☐ NO ☐ YES (SPECIFY)

INCLUDING DRAWING NUMBERS, INSPECTION, TEST, CLEANLINESS, OR OTHER SPECIFIC REQUIREMENTS

FOR P & E USE ONLY

CUSTOMER	JOB TITLE	BUILDING

SUPPLEMENTAL DISTRIBUTION: ENGINEER	PROGRAMMED MAINT. NUMBER	ENGINEER	CODE	LABOR ESTIMATE	SCHEDULE DATES
	EQUIPMENT CLASSIFICATION	SIC	CODE	MATERIAL ESTIMATE	START
	WORK CLASSIFICATION	PLANNER ESTIMATOR	CODE	TOTAL $	COMP.

CRAFT CODE BY DEPARTMENT FAB.	MAINT	RES.	ESTIMATED HOURS	BACK LOG CODE	DESCRIPTION	CRAFT SCHEDULE
TOTAL HOURS						

APPROVED	DATE	FINAL INSPECTION	DATE

DISTRIBUTION: Original, Blue, Green - P&E; Yellow Retained by Originator

Example 15.1.

informally and can be initiated by any member of the operating group. The same documentation and auditing required of more formal work requests or work orders are required for this type also.

Prior to the startup of a nuclear reactor, all components must, of course, be operating properly. To ensure that all initial components are operating reliably, a startup checklist is completed and audited by the supervisor in charge of the operation. When the reactor is shut down, a need exists for assurance that specific components and systems have been properly secured. Such assurance is guaranteed by the completion of these activities and completing the "Shutdown Checklist." Refer to Section 12.3 for detailed checklists.

15.5.1. Operability tests

Functional operability tests are conducted by personnel of the operating division. Normally, these tests are performed while the reactor is shutdown since the system being tested cannot be isolated from the operating systems without affecting normal operating conditions. The procedures are well documented in this operating manual, and specific check sheets are completed and become a part of the permanent records. The responsibility, scheduling, and documentation for tests in this category are within the operating division and are handled through, and are a part of, the major shutdown schedule for the reactor.

15.5.2. Spare parts stock

The reactor supervisor is responsible for keeping an adequate supply of spare parts on hand. Criteria used in selecting the spare parts to be stocked are based on the level of essentiality of the component, the manufacturer's recommendations, the mechanical-maintenance history on similar equipment

that has been in service for a long period of time, and whether the parts are shelf items in Knoxville. All are purchased in accordance with original specifications and are established as stock items in ORNL Special Materials Stores. The inventory is maintained through the use of an IBM card system.

A card file is located in the facility maintenance coordinator's office. This file contains a card for each piece of equipment listing the name of the manufacturer, the part, the vendor's part number, the ORNL standard stock number, and the number of parts in stock.

15.5.3. Auditing of maintenance by Operations

The facility maintenance coordinator audits each maintenance job either while the work is being performed or after its completion. If an important piece of equipment is being repaired, the facility maintenance coordinator and the P&E field engineer direct the work as it is being done. For routine repair work on less important equipment, the maintenance coordinator checks out the equipment before it is placed back into service. The facility maintenance coordinator's signature on the maintenance record form ensures that the work has been done properly and the equipment is ready to be returned to service.

There are periodic Quality Assurance audits made by the Operations Division quality assurance coordinator. The reactor supervisor also audits the maintenance records periodically.

New core components are checked for fit by installation in a component mock-up prior to installation in the reactor. This check ensures that the particular component is properly fabricated in regard to fitting mating components.

15.5.4. Auditing by independent committees

All facets of the operation are reviewed annually by two independent committees: the Reactor Operations Review Committee, composed of ORNL senior scientists and/or engineers who are not affiliated with the operating division, and the Reactor Safety Review Committee of the Oak Ridge Operations Office of the Department of Energy. These committees are charged with the responsibility for detailed review of the operation and maintenance of the facility with particular emphasis on safety; they evaluate conditions and submit official recommendations to improve the operational aspects of the facility. Basically, the review consists of a subcommittee reviewing the operational log books, data sheets, and maintenance records; observing the activities during reactor shutdown and startup; and making a visual inspection of the facility. The committee meets with the reactor supervisor and top supervision of the Operations Division, and pertinent subject matter is discussed. The reviews are officially documented and published as an ORNL report or as a DOE report.

15.6. Records

Including those records which have previously been mentioned in this procedure, history of maintenance activities is retained in a variety of formats. Table 15.1 itemizes these sources and includes pertinent information. These various sources of information relating to maintenance history are of significant value in day-to-day operation.

Table 15.1. List of maintenance records - BSR

Item	Reference document	Where filed	Filed by	Long Kept	Audited by	Remarks
Programmed Maintenance	ORNL/TM-2161					
Master list		On computer	Plant & Equipment Prog. Maint. staff	Permanently		Continually updated by Fac. Maint. Coord. and P&E field engineer
IBM cards		Rm. 208, Bldg. 3042	Facility Maintenance Coordinator	Permanently	Computer, Prog. Maint. Staff, and Fac. Maint. Coord.	
Reschedule list				Until next list issued		Copy to Facility and Div. Maint. Coord. on request
Manufacturers' manuals		Rm. 208, Bldg. 3042	Fac. Maint. Coord.			
Rod drive notebooks	BSR Oper. Manual, Sec. 4.4	Rm. 106, Bldg. 3010	Day shift supervisor	Permanently	Fac. Supv.	
Mechanical Maint. Record		Rm. 208, Bldg. 3042	Fac. Maint. Coord.	Permanently	Fac. Supv., Div. Maint. Coord.	
Drawings of facilities		Rm. 106, Bldg. 3010	Day shift supervisor	Permanently		

Table 15.1. (continued)

Item	Reference document	Where filed	Filed by	Long Kept	Audited by	Remarks
Original specifications		Rm. 204, Bldg. 3042	Fac. Supv.			
Certification of materials, welding, and other inspections		In files of Div. performing work	By Div. performing work		Qualified people in Div. doing the work	Most of this work is done by Insp. Engr. Sec. and P&E Div.
Qualification of craftsmen	P&E Div. Welder Status Report and other P&E procedures	P&E Div. files	P&E Div.	Permanently	Qualified people in P&E Div.	
Mechanical Change Memo	Memo from facility supervisor to distribution dated 10-4-68	BSR Control Room annex	Day shift supervisor	Permanently	Designers, Oper. Supv. up through Div. Director	
Pressure-containing equipment tests	Inspection Engineering Manual S, Section 13, and ORNL SPP 12-B and 16	On computer	Insp. Engr. Sec.	Permanently	Insp. Engr., Fac. Supv., Fac. Maint. Coord., RCO	Copies of test results distributed monthly
Filter Test Report	Insp. Engr. Manual, Sec. 16, and ORNL Bulletin DD-116	On computer	Insp. Engr. Sec.	Permanently	Insp. Engr., Fac. Supv., Fac. Maint. Coord., RCO	Published in fac. quarterly report

Table 15.1. (continued)

Item	Reference document	Where filed	Filed by	Long Kept	Audited by	Remarks
Iodine Absorber Test Report	Insp. Engr. Manual, Sec. 15, F. R. Bruce Memo 2/3/67	Fac. quarterly report	Fac. Supv.	Permanently	Insp. Engr., Fac. Supv.	Published in fac. quarterly report
Hoisting Equipment Safety Report	Insp. Engr. Manual S, Sec. 14, and ORNL SPP-16	On computer	Insp. Engr.	Permanently	Insp. Engr., Fac. Supv., Fac. Maint. Coord., Safety Sec.	Copies of test results distributed monthly
Hoisting Slings		On computer		1 yr	Fac. Maint. Coord., Fac. Supv.	Bad chokers discarded
Shift Check Sheets	BSR Oper. Manual, Sec. 12	Rm. 106, Bldg. 3010	Day shift supervisor	1 yr	Fac. Maint. Coord., Fac. Supv.	
Weekly Check Sheets	BSR Oper. Manual, Sec. 12	Rm. 106, 3010 Rm. 208, 3042	Day shift supervisor	1 yr	Fac. Maint. Coord.	
Operating Shift Log Book	BSR Oper. Manual, Sec. 12	Rm. 106, Bldg. 3010	Day shift supervisor	Permanently	Fac. Supv.	
Maintenance Request (UCN-8321)	Memo from Fac. Supv. to Dist. dated 7/13/67			Not filed	Fac. Supv.	Any pertinent information is transferred to Mech. Maint. Record

Table 15.1. (continued)

Item	Reference document	Where filed	Filed by	Long Kept	Audited by	Remarks
Job Order (UCN-8320)	Memo from Fac. Supv. to Dist. dated 7/13/67	Rm. 208, Bldg. 3042	Fac. Maint. Coord.	Permanently	Fac. Supv.	Formal work order
Startup Checklist	BSR Oper. Manual, Sec. 12	BSR control room annex	Day shift supervisor	Permanently	Fac. Supv.	
Shutdown Schedule		Rm. 106, Bldg. 3010	Day shift supervisor	Permanently	Fac. Supv.	
Spare Parts Card File		Rm. 208, Bldg. 3042	Fac. Maint. Coord.	Permanently	Fac. Supv.	
Operating Procedures	ORNL/TM-2676	BSR control room annex, ORR control room, and Fac. Supv. office	Fac. Supv.	Permanently	Operations Supv. through Sec. Head	
Radiation Work Permit	BSR Oper. Manual, Sec. 9	Health Physics, Bldg. 3001	Health Physics	Permanently	Fac. Supv., RCO	
Cooling Tower Insp. (UCN-5595)	Manufacturer Manuals	Rm. 208, Bldg. 3042	Fac. Maint. Coord.	1 yr	Fac. Supv.	
Air Lines Filter Checklist	Included on Shutdown Schedule	Rm. 208, Bldg. 3042	Fac. Maint. Coord.	1 yr	Fac. Supv.	

Table 15.1. (continued)

Item	Reference document	Where filed	Filed by	Long Kept	Audited by	Remarks
Instr. Maint. Practices	Reactor I&C Maint. Proc. No. BSR202					
I&C Maint. Schedule	Reactor I&C Maint. Proc. No. BSR 203	BSR control room annex	Day shift supervisor	Permanently	Reactor Controls Maint. Supv.	
I&C Maint. Procedures and data sheet	Reactor I&C Maint. Manual Proc. Nos. 202 and 203	BSR control	Day shift supervisor	Permanently	Operations supervisor	
Card File - Maint. Records	Reactor I&C Maint. Manual Proc. No. 200	ORR-BSR shop office	I&C field foreman	Permanently	I&C Div. staff	
Daily Instr. Maint. Log	Reactor I&C Maint. Manual Proc. No. 200	ORR-BSR shop office	I&C field foreman	Permanently	Reactor Controls Sec. staff	Carbon copy of log routed to I&C Engr. Sec. for audit
Daily Routine Instr. Checks	BSR Oper. Manual, Sec. 12	BSR control room annex	Day shift supervisor	1 yr	Oper. shift supv. and day supv.	
Fac. Contamination and Radiation Alarm Check Sheets	ORNL/TM-1874	Monitoring Sys. Dev. group of I&C, Bldg. 3500	I&C MSD group	Permanently	I&C Monitoring Sys. Dev. group	All instruments checked every two months

Table 15.1. (continued)

Item	Reference document	Where filed	Filed by	Long Kept	Audited by	Remarks
Instrument Drawings		I&C field engr. office and reactor control room		Permanently	I&C Reactor Controls Sec., Oper. Fac. Supv.	Tracings kept in I&C Reactor Controls drafting file, Bldg. 3500
Reactor Controls Change Memo		BSR control room annex ORR-BSR I&C foreman's office	Day shift supervisor I&C foreman	Permanently	Designers, Oper. Supv., to Div. Director	Original in Oper. Div. Director's file
Nuclear Instruments Repair		ORR-BSR I&C foreman's office	I&C foreman	Permanently		
Manufacturers' Manuals		ORR-BSR I&C foreman's office	I&C foreman	Permanently		

DISTRIBUTION LIST

1. S. J. Ball
2. G. H. Burger
3. C. D. Cagle
4. G. H. Coleman
5-16. B. L. Corbett
17. W. H. Culbert
18. B. H. Cupp
19. T. L. Dahl, Sr.
20. A. D. DeVaney
21. C. D. DeVaney
22. W. A. Duggins
23. R. W. Hobbs
24. S. A. Hodge
25. S. S. Hurt
26. M. W. Kohring
27. E. D. Lance
28. D. L. Laughlin
29. R. V. McCord
30. L. C. Oakes
31. L. P. Pugh
32. J. A. Ray
33. T. M. Sims
34. R. M. Stinnett
35. J. H. Swanks
36. J. R. Thomas
37. R. D. Taylor
38. Central Research Library
39. Document Reference Section
40. BSR Control Room, 3010
41-42. Laboratory Records Department
43. Laboratory Records, ORNL RC
44. ORNL Patent Office
45. Reactor Operations Section Office, 7910
46. W. A. Johnson, DOE-ORO
47. Director, Office of Assistant Manager for Energy Research and Development, DOE-ORO
48-74. Technical Information Center, Oak Ridge, Tennessee 37830

☆U.S. GOVERNMENT PRINTING OFFICE: 1983-646-055/332