MARTIN MARIETTA ENERGY SYSTEMS LIBRARIES

3 4456 0385430 9

ORNL/TM-8602

ornl

OAK
RIDGE
NATIONAL
LABORATORY

UNION
CARBIDE

Correlation of Radioactive Waste Treatment Costs and the Environmental Impact of Waste Effluents in the Nuclear Fuel Cycle—Conversion of Yellow Cake to Uranium Hexafluoride. Part II. The Solvent Extraction-Fluorination Process

M. B. Sears
E. L. Etnier
G. S. Hill
B. D. Patton
J. P. Witherspoon
S. N. Yen

OAK RIDGE NATIONAL LABORATORY
CENTRAL RESEARCH LIBRARY
CIRCULATION SECTION
4500N ROOM 175
LIBRARY LOAN COPY
DO NOT TRANSFER TO ANOTHER PERSON
If you wish someone else to see this report, send in name with report and the library will arrange a loan.
UCN-7969 (3 9-77)

OPERATED BY
UNION CARBIDE CORPORATION
FOR THE UNITED STATES
DEPARTMENT OF ENERGY

Printed in the United States of America. Available from
National Technical Information Service
U.S. Department of Commerce
5285 Port Royal Road, Springfield, Virginia 22161
NTIS price codes—Printed Copy: A16 Microfiche A01

This report was prepared as an account of work sponsored by an agency of the United States Government. Neither the United States Government nor any agency thereof, nor any of their employees, makes any warranty, express or implied, or assumes any legal liability or responsibility for the accuracy, completeness, or usefulness of any information, apparatus, product, or process disclosed, or represents that its use would not infringe privately owned rights. Reference herein to any specific commercial product, process, or service by trade name, trademark, manufacturer, or otherwise, does not necessarily constitute or imply its endorsement, recommendation, or favoring by the United States Government or any agency thereof. The views and opinions of authors expressed herein do not necessarily state or reflect those of the United States Government or any agency thereof.

ORNL/TM-8602
Dist. Category UC-11

Contract No. W-7405-eng-26

CHEMICAL TECHNOLOGY DIVISION

CORRELATION OF RADIOACTIVE WASTE TREATMENT COSTS AND THE ENVIRONMENTAL IMPACT OF WASTE EFFLUENTS IN THE NUCLEAR FUEL CYCLE — CONVERSION OF YELLOW CAKE TO URANIUM HEXAFLUORIDE. PART II. THE SOLVENT EXTRACTION–FLUORINATION PROCESS

M. B. Sears*
E. L. Etnier**
G. S. Hill**
B. D. Patton
J. P. Witherspoon**
S. N. Yen†

Date Published: March 1983

*Presently a staff member of the Fuel Recycle Division.
**Health and Safety Research Division.
†Present address: Bechtel National, Incorporated, San Francisco, CA 94119

OAK RIDGE NATIONAL LABORATORY
Oak Ridge, Tennessee 37830
operated by
UNION CARBIDE CORPORATION
for the
DEPARTMENT OF ENERGY

MARTIN MARIETTA ENERGY SYSTEMS LIBRARIES
3 4456 0385430 9

CONTENTS

Page

Foreword xxi

Abstract 1

1.0 Summary 2

1.1 Model Plant 2

1.2 Case Studies and Assumptions. 3

1.3 Radiological Impact and Cost/Benefit Analysis for Feed Containing "Low" Levels of ^{230}Th and ^{226}Ra Impurities . . 7

1.4 Radiological Impact and Cost/Benefit Analysis for Feed Containing "High" Levels of ^{230}Th and ^{226}Ra Impurities. . 11

1.5 Contribution of the Cost of Radwaste Treatment to UF_6 Conversion and Total Nuclear Power Costs. 14

2.0 Introduction. 15

2.1 References. 17

3.0 Objectives and Assumptions. 19

3.1 Objectives. 19

3.2 Selection of the Model UF_6 Plants 20

3.3 Management of Radioactive Wastes. 20

3.4 Cost Parameters 22

3.5 Equipment Operation 23

3.6 Plant Siting. 23

3.7 Radiological Impact 24

3.8 References. 24

4.0 Source Terms for Release of Radioactive Materials 27

4.1 The Uranium Conversion and UF_6 Production Industry. . . . 29

4.2 Composition and Amount of Radioactive Material Processed by the Model UF_6 Production Plant 30

4.2.1 Feed to the model UF_6 production plant. 30

4.2.2 Growth and decay of radionuclides within the model UF_6 production plant. 33

4.2.3 Movement of radioactive materials within the model UF_6 production plant. 34

Page

4.3 Waste Management Methods 36

4.3.1 Airborne radwaste-chemwaste treatment methods. . 36

4.3.1.1 Dry dust collectors. 36

4.3.1.2 Wet scrubbers for absorbing noxious gases. 40

4.3.1.3 Wet scrubbers for collecting particulates 43

4.3.1.4 NO_x absorption tower 44

4.3.1.5 HF condensers. 45

4.3.1.6 Hydrogen burner. 46

4.3.1.7 Process changes. 46

4.3.2 Liquid radwaste-chemwaste treatment methods. . . 46

4.3.2.1 Holding and settling before release. . 47

4.3.2.2 Holding and decay before release . . . 47

4.3.2.3 Impoundment with evaporation 47

4.3.2.4 Precipitation of chemicals and radioactive materials. 48

4.3.2.5 Biological nitrification and denitrification. 51

4.3.2.6 Thermal denitration. 52

4.3.2.7 Ammonia removal by calcining the yellow cake feed 53

4.3.2.8 Ammonia removal from alkaline waste-water by volatilization. 54

4.3.2.9 Evaporators. 54

4.3.2.10 Fractional distillation (rectification). 55

4.3.2.11 Activated-carbon adsorption. 55

4.3.2.12 Process changes. 56

4.3.3 Solid radwaste-chemwaste treatment methods . . . 57

4.3.3.1 Impoundment. 57

4.3.3.2 Drying and drumming. 57

4.3.3.3 Fixation in cement 57

4.3.3.4 Incineration 58

Page

4.4 Solvent Extraction—Fluorination UF_6 Plant. 58

4.4.1 Summary. 58

4.4.2 Materials handling 64

4.4.2.1 Case studies 64

4.4.2.2 Source term calculations 65

4.4.3 Yellow cake sampling 67

4.4.4 Yellow cake storage. 67

4.4.5 Purification (refining) by solvent extraction. . 67

4.4.5.1 Dissolution (digestion). 68

4.4.5.2 Additives to the dissolver solution. . 70

4.4.5.3 Primary dissolver off-gas treatment. . 71

4.4.5.4 Miscellaneous digestion (scrap recycle) 71

4.4.5.5 Solvent extraction 72

4.4.5.6 Solvent treatment. 73

4.4.5.7 Uranium trioxide production (denitration). 74

4.4.5.8 Denitration off-gas treatment and nitric acid recovery 75

4.4.6 Reduction of UO_3 to UO_2. 76

4.4.6.1 Reduction process. 76

4.4.6.2 Reduction off-gas treatment case studies 77

4.4.7 Hydrofluorination of UO_2 to UF_4. 78

4.4.7.1 Hydrofluorination process. 78

4.4.7.2 Hydrofluorination off-gas treatment case studies 79

4.4.8 Fluorination of UF_4 to UF_6 81

4.4.8.1 Fluorination process, SX-F Cases 1-3 . 81

4.4.8.2 Ash (scrap recycle). 83

4.4.8.3 Fluorination process, SX-F Case 4. . . 83

4.4.8.4 Fluorination off-gas treatment, SX-F Case 1. 85

4.4.8.5 Uranium recovery from scrub liquors. . 87

Page

4.4.8.6 Fluorination off-gas treatment, SX-F Cases 2 and 3. 88

4.4.8.7 Fluorination off-gas treatment, SX-F Case 4 88

4.4.8.8 Ash degassing and UF_6 sampling 89

4.4.9 Fluorine production. 89

4.4.9.1 Fluorine production process. 89

4.4.9.2 Fluorine cell hydrogen off-gas treatment . 90

4.4.10 UF_6 cylinder wash. 91

4.4.11 Treatment of the raffinate and other aqueous wastes from solvent extraction 91

4.4.11.1 Quantity and composition of solvent extraction wastes. 92

4.4.11.2 Barium carbonate treatment for radium control, Cases 1, 3, and 4 94

4.4.11.3 Neutralization to precipitate radwaste-chemwaste, Cases 1-4 95

4.4.11.4 SX Case 1 - precipitate the radwaste; release the liquid nitrate waste 99

4.4.11.5 SX Case 2 - precipitate the radwaste; impound the liquid nitrate waste 103

4.4.11.6 SX Case 3 - precipitate and dry the radwaste; biological nitrification/ denitrification; release purified wastewater 106

4.4.11.7 SX Case 4 - precipitate the radwaste and incorporate it in cement; recover nitric acid, ammonia, and water. 119

4.4.12 Treatment of liquid fluoride wastes from off-gas scrubbers. 139

4.4.13 Liquid waste treatment summary, SX-F model plant . . 143

4.4.14 Solid waste treatment summary, SX-F model plant. . . 147

4.4.15 Radon release. 151

4.4.15.1 Radon release from SX-F plant processes. . 152

4.4.15.2 Radon release from the active radwaste impoundment. 154

Page

4.5 References 156

5.0 Nonradioactive Wastes. 172

6.0 Costs. 173

6.1 Capital Cost 174

6.1.1 Direct costs 174

6.1.2 Indirect costs 174

6.2 Annual Fixed Charges and Operating Costs 175

6.3 References 176

7.0 Environmental Impact (Radiological Impact) 179

7.1 Models and Assumptions for Estimating the Radiological Impact of Airborne Effluents During Operations 181

7.1.1 AIRDOS-II. 181

7.1.2 Atmospheric dispersion (meteorology) 182

7.1.3 Population 184

7.1.4 Dose conversion. 186

7.2 Environmental Impact During Operations for Plant Feed Containing "Low" Levels of ^{230}Th and ^{226}Ra Impurities. . 187

7.2.1 Radiation dose commitments from airborne effluents. 187

7.2.1.1 Doses to individuals 187

7.2.1.2 Doses to population. 189

7.2.1.3 Exposure modes and radionuclides . . . 189

7.2.1.4 Effect of food source on dose. 190

7.2.1.5 Effect of release height on dose . . . 190

7.2.1.6 Effect of distance from plant on dose. 190

7.2.1.7 Doses to biota other than man. 191

7.2.2 Radiological impact of liquid effluents. 191

7.2.2.1 Doses to individuals 191

7.2.2.2 Doses to biota other than man. 192

Page

7.2.3 Total radiation dose from all pathways 193

7.3 Radiation Dose from Long-Lived Radionuclides After Closure of the UF_6 Plant 193

7.3.1 Postoperational source terms 194

7.3.2 Postoperational pathways of exposure 195

7.3.2.1 Resuspended air activity 195

7.3.2.2 Ingestion of food. 196

7.3.2.3 Contaminated ground. 197

7.3.3 Estimates of postoperational doses 197

7.3.3.1 Individual and organ doses 197

7.3.3.2 Population doses 198

7.4 Environmental Impact During Operations for Plant Feed Containing "High" Levels of ^{230}Th and ^{226}Ra Impurities . 198

7.4.1 Radiation dose commitments from airborne effluents. 199

7.4.2 Radiological impact of liquid effluents. 199

7.5 References 200

8.0 Correlation of Radiological Dose with Cost of Waste Treatment. 202

8.1 Cost and Benefit Correlations for the SX-F Model Plant Processing Feed Containing "Low" Levels of ^{230}Th and ^{226}Ra Impurities 204

8.1.1 Cost and benefit summary for combined waste-treatment packages 204

8.1.2 Cost and benefit correlations for airborne effluents. 205

8.1.2.1 Process dust control 206

8.1.2.2 Process off-gas (radiological assessment). 206

8.1.2.3 Building ventilation effluent. 206

8.1.2.4 Radwaste drying and drumming 207

8.1.2.5 Hydrogen fluoride. 207

8.1.2.6 Other airborne chemical releases . . . 208

Page

8.1.3 Cost and benefit correlations for liquid and solid waste-treatment systems 208

8.1.3.1 Liquid nitrate-radwaste treatment systems 209

8.1.3.2 Solid radwaste management 211

8.1.3.3 Liquid fluoride treatment systems . . . 212

8.2 Cost and Benefit Correlations for the SX-F Model Plant Processing Feed Containing "High" Levels of ^{230}Th and ^{226}Ra Impurities. 213

8.3 Radon 214

8.4 References. 215

9.0 Tables. 217

10.0 Figures 317

LIST OF TABLES

Table		Page
S-1	Conceptual waste treatment case studies.	4
S-2	Annual costs and total-body doses for the model UF_6 plant chemwaste-radwaste treatment case studies — feed containing "low" levels of ^{230}Th and ^{226}Ra impurities	8
S-3	Annual costs and total-body doses for the model UF_6 plant chemwaste-radwaste treatment case studies - feed containing "high" levels of ^{230}Th and ^{226}Ra impurities	13
1.1	Summary of radwaste-chemwaste treatment variables for the model solvent extraction—fluorination UF_6 conversion plant .	219
4.1	Uranium refining and hexafluoride production	220
4.2	Feed to the model yellow cake-to-UF_6 conversion plant — Cases 1 and 2	221
4.3	Assumptions used in calculating feed to the model yellow cake-to-UF_6 conversion plant.	222
4.4	Efficiency of noxious gas absorbers.	224
4.5	Efficiency of wet dust collectors.	225
4.6a	Airborne radwaste releases from the model 10,000-metric ton/yr SX-F UF_6 plant — Case 1	226
4.6b	Airborne radwaste releases from the model 10,000-metric ton/yr SX-F UF_6 plant — Case 2	227
4.6c	Airborne radwaste releases from the model 10,000-metric ton/yr SX-F UF_6 plant — Case 3	228
4.6d	Airborne radwaste releases from the model 10,000-metric ton/yr SX-F UF_6 plant — Case 4	229
4.7	Airborne chemwaste releases from the model 10,000-metric ton/yr SX-F UF_6 plant.	230
4.8	Airborne radwaste treatment systems for the model SX-F UF_6 plant.	231
4.9	Liquid radwaste releases from the model 10,000-metric ton/yr SX-F UF_6 plant	232

Table		Page
4.10	Liquid chemwaste releases from the model 10,000-metric ton/yr SX-F UF_6 plant	233
4.11	Solid chemwaste-radwaste generated by the model 10,000-metric ton/yr SX-F UF_6 plant for "low-impurity" and ("high-impurity") feed options	234
4.12	Dust-bearing air flows at the model 10,000-metric ton/yr SX-F UF_6 plant	235
4.13	Airborne uranium releases from the model 10,000-metric ton/yr SX-F UF_6 plant	236
4.14	Airborne ash and radwaste dust releases from the model SX-F UF_6 plant	237
4.15	Dissolution feed including recycle streams — Cases 1 and 2, for the model 10,000-metric ton/yr SX-F UF_6 plant	238
4.16	Solvent extraction and solvent treatment flows for the model 10,000-metric ton/yr SX-F UF_6 plant	239
4.17	Solvent treatment (uranium recovery) material flows for the model 10,000-metric ton/yr SX-F UF_6 plant	240
4.18	Denitration material flows for the model 10,000-metric ton/yr SX-F UF_6 plant — Cases 1-3	241
4.19	Reduction waste streams and material flows for the model 10,000-metric ton/yr SX-F UF_6 plant	242
4.20	Hydrofluorination waste streams and material flows for the model 10,000-metric ton/yr SX-F UF_6 plant	243
4.21	Radionuclide composition of recovered 25 wt % HF in SX-F Cases 1-3	244
4.22	Fluorination waste and recycle streams and material flows for the model 10,000-metric ton/yr SX-F UF_6 plant	245
4.23	Fluorine cell waste and recycle streams and material flows for the model 10,000-metric ton/yr SX-F UF_6 plant	246
4.24	Chemical composition of solvent extraction waste streams — Cases 1 and 2, for the model 10,000-metric ton/yr SX-F UF_6 plant	247

Table		Page
4.25	Changes in the chemical composition of solvent extraction wastes — Cases 3 and 4	248
4.26	Radioactive materials in the solvent extraction waste streams for the model 10,000-metric ton/yr SX-F UF_6 plant	249
4.27	Chemical composition of solid wastes generated in treating liquid solvent extraction wastes from the model 10,000-metric ton/yr SX-F UF_6 plant	250
4.28	Case 1 liquid waste treatment flows for the model 10,000-metric ton/yr SX-F UF_6 plant	251
4.29	Composition of Case 1 liquid waste treatment streams for the model 10,000-metric ton/yr SX-F UF_6 plant	252
4.30	Composition of SX Case 2 nitrate waste solution impounded in lagoons for the model 10,000-metric ton/yr SX-F UF_6 plant	253
4.31	Case 3 flows for radwaste precipitation and biofeed preparation, model 10,000-metric ton/yr SX-F UF_6 plant	254
4.32	Nutrient amendments for Case 3 biological nitrification/denitrification	255
4.33	Case 3 flows for biological nitrification/denitrification, model 10,000-metric ton/yr SX-F UF_6 plant	256
4.34	Case 3 flows for lime recovery and biomass incineration, model 10,000-metric ton/yr SX-F UF_6 plant	257
4.35	Case 4 flows for radwaste precipitation and cementing, ammonia recovery, and chemwaste precipitation for model 10,000-metric ton/yr SX-F UF_6 plant	258
4.36	Case 4 flows for solvent treatment system with ammonia and water recycle, model 10,000-metric ton/yr SX-F UF_6 plant	259
4.37	Case 4 flows for concentrating the nitrate in surplus weak acids for model 10,000-metric ton/yr SX-F UF_6 plant	260
4.38	Case 4 feed to nitric acid recovery system, model 10,000-metric ton/yr SX-F UF_6 plant	261

Table		Page
4.39	Case 4 flows for recovering nitric acid from solvent extraction wastes and from NO_x tail gases from $UO_2(NO_3)_2$ denitration for model 10,000-metric ton/yr SX-F UF_6 plant	262
4.40	Case 4 flows for magnesia recovery system for model 10,000-metric ton/yr SX-F UF_6 plant	263
4.41	Chemical treatment of liquid fluoride wastes — Cases 2-4, model 10,000-metric ton/yr SX-F UF_6 plant	264
4.42	Radon release from active radwaste impoundments, model 10,000-metric ton/yr SX-F UF_6 plant	265
6.1	Estimated capital and annual costs and contribution to power cost of waste treatment for model 10,000-metric ton/yr SX-F UF_6 plant	266
6.2	Installed costs of equipment for the model 10,000-metric ton/yr SX-F UF_6 plant — WASTE TREATMENT CASE 2	267
6.3	Installed costs of equipment for the model 10,000-metric ton/yr SX-F UF_6 plant — WASTE TREATMENT CASE 3.	268
6.4	Installed costs of equipment for the model 10,000-metric ton/yr SX-F UF_6 plant — WASTE TREATMENT CASE 4.	270
7.1	Latitude-longitude coordinates used to derive data sets for population distribution	273
7.2	Representative population distribution at successive distances for midwestern site	274
7.3	Representative population distribution at successive distances for western (milling) sites in the United States.	275
7.4	Maximum annual doses to individuals from airborne effluents from a model SX-F UF_6 plant — "low-impurity" feed — assuming that 100% of the food is produced locally — ALL AIRBORNE EFFLUENTS	276
7.4a	Doses to individuals and to population from airborne effluents from a model SX-F UF_6 plant — "low-impurity" feed — PROCESS DUST CONTROL EFFLUENT.	277
7.4b	Doses to individuals and to population from airborne effluents from a model SX-F UF_6 plant — "low-impurity" feed — PROCESS OFF-GAS	278

Table		Page
7.4c	Doses to individuals and to population from airborne effluents from a model SX-F UF_6 plant — "low-impurity" feed — BUILDING VENTILATION EFFLUENT	279
7.4d	Doses to individuals and to population from airborne effluents from a model SX-F UF_6 plant — "low-impurity" feed — RADWASTE DUST CONTROL	280
7.4e	Doses to individuals and to population from airborne effluents from a model SX-F UF_6 plant — "low-impurity" feed — RADON-222 AS GASEOUS RELEASE	281
7.5	Annual doses to the population from airborne effluents from a model SX-F UF_6 plant — "low-impurity" feed	282
7.6	Exposure modes contributing to total-body dose from airborne effluents of a model SX-F UF_6 plant — "low-impurity" feed	283
7.7	Major radionuclides contributing to doses from airborne effluents from a model SX-F UF_6 plant — "low-impurity" feed	284
7.8	Major radionuclides contributing to exposure modes for airborne effluents from a model SX-F UF_6 plant — "low-impurity" feed	285
7.9	Maximum annual doses to individuals from airborne effluents from a model SX-F UF_6 plant — "low-impurity" feed — assuming that none (0%) of the food is produced locally.	286
7.10a	Effect of food source on doses from a model SX-F UF_6 plant (Case 1 — "low-impurity" feed)	287
7.10b	Effect of food source on doses from a model SX-F UF_6 plant (Case 2 — "low-impurity" feed)	288
7.10c	Effect of food source on doses from a model SX-F UF_6 plant (Case 3 — "low-impurity" feed)	289
7.10d	Effect of food source on doses from a model SX-F UF_6 plant (Case 4 — "low-impurity" feed)	290
7.11	Effect of release height on dose from a model SX-F UF_6 plant	291

Table		Page
7.12	Reduction of dose as a function of distance from a model SX-F UF_6 plant	292
7.13	Annual doses to indviduals from liquid effluents from a model SX-F UF_6 plant — "low-impurity" feed	293
7.14	Percent of major radionuclides contributing to total-body exposure modes for liquid effluents from a model SX-F UF_6 plant — "low-impurity" feed	294
7.15	Annual doses to aquatic biota from liquid effluents from a model SX-F UF_6 plant — "low-impurity" feed	295
7.16	Percent of major radionuclides contributing to aquatic doses from liquid effluents from a model SX-F UF_6 plant — "low-impurity" feed.	296
7.17	Long-lived radionuclides dispersed via terrestrial pathways during the 30-yr life of a model SX-F UF_6 plant — Case 1, "low-impurity" feed	297
7.18	Annual doses to average individual after the model SX-F UF_6 plant closes until significant decay of radionuclides occurs — Case 1, "low-impurity" feed	298
7.19	Annual doses to the population after the model SX-F UF_6 plant closes until significant decay of radionuclides occurs — Case 1, midwestern site, "low-impurity" feed. . .	299
7.20	Maximum annual doses to individuals from airborne effluents from a model SX-F UF_6 plant — "high-impurity" feed — assuming that 100% of the food is produced locally.	300
7.21	Maximum annual doses to individuals from airborne effluents from a model SX-F UF_6 plant — "high-impurity" feed — assuming that none (0%) of the food is produced locally.	301
7.22	Annual doses to the population from airborne effluents from a model SX-F UF_6 plant — "high-impurity" feed	302
7.23	Annual doses to individuals from liquid effluents from a model SX-F UF_6 plant — "high-impurity" feed.	303
8.1	Total annual cost increase for reduction of the environmental impact of the model 10,000-metric ton/yr SX-F UF_6 production plant — "low-impurity" feed — MIDWESTERN SITE	304

Table		Page
8.2	Total annual cost increase for reduction of the environmental impact of the model 10,000-metric ton/yr SX-F UF_6 production plant — "low-impurity" feed — NEW MEXICO SITE	305
8.3	Annual cost for reduction of dose from airborne effluents at the model 10,000-metric ton/yr SX-F UF_6 plant — "low-impurity" feed — COMBINED AIRBORNE EFFLUENTS	306
8.3a	Annual cost for reduction of dose from airborne effluents at the model 10,000-metric ton/yr SX-F UF_6 plant — "low-impurity" feed — PROCESS DUST CONTROL EFFLUENT	307
8.3b	Annual cost for reduction of dose from airborne effluents at the model 10,000-metric ton/yr SX-F UF_6 plant — "low-impurity" feed — PROCESS OFF-GAS	308
8.3c	Annual cost for reduction of dose from airborne effluents at the model 10,000-metric ton/yr SX-F UF_6 plant — "low-impurity" feed — BUILDING VENTILATION EFFLUENT	309
8.4a	Incremental cost increase — dose reduction between case studies at the model 10,000-metric ton/yr SX-F UF_6 plant — "low-impurity" feed — PROCESS DUST CONTROL EFFLUENT	310
8.4b	Incremental cost increase — dose reduction between case studies at the model 10,000-metric ton/yr SX-F UF_6 plant — "low-impurity" feed — PROCESS OFF-GAS	311
8.4c	Incremental cost increase — dose reduction between case studies at the model 10,000-metric ton/yr SX-F UF_6 plant — "low-impurity" feed — BUILDING VENTILATION EFFLUENT	312
8.5	Costs and effectiveness of treating liquid wastes and associated solids at the model 10,000-metric ton/yr SX-F UF_6 plant — "low-impurity" feed	313
8.6	Total annual cost increase for reduction of the environmental impact of the model 10,000-metric ton/yr SX-F UF_6 production plant — "high-impurity" feed — MIDWESTERN SITE	314
8.7	Total annual cost increase for reduction of the environmental impact of the model 10,000-metric ton/yr SX-F UF_6 production plant — "high-impurity" feed — NEW MEXICO SITE	315

LIST OF FIGURES

Figure		Page
4.1	Simplified flow diagram for the SX-F process	319
4.2	Uranium refining system for the model SX-F UF_6 plant showing Case 1 off-gas treatment	320
4.3	Conversion of UO_3 to UF_4 systems for the model SX-F UF_6 plant showing Case 1 off-gas treatment	321
4.4	Fluorine production system for the model UF_6 plant showing Case 1 hydrogen off-gas treatment	322
4.5	Process and radwaste dust control effluent treatment systems for the model SX-F UF_6 plant — Cases 1-4	323
4.6	Building ventilation effluent treatment systems for the model SX-F UF_6 plant — Cases 1-4	324
4.7	Model solvent extraction and solvent treatment systems showing codes for Table 4.16	325
4.8	Reduction off-gas treatment systems for the model SX-F UF_6 plant — Cases 1-4.	326
4.9	Hydrofluorination off-gas treatment systems for the model SX-F UF_6 plant — Cases 1-3	327
4.10	Hydrofluorination off-gas treatment system for the model SX-F UF_6 plant — Case 4.	328
4.11	Fluorination off-gas treatment systems for the model SX-F UF_6 plant — Cases 1-3	329
4.12	Fluorination off-gas treatment system for the model SX-F UF_6 plant — Case 4	330
4.13	Fluorine cell hydrogen off-gas treatment systems for the model SX-F UF_6 plant — Cases 1-4	331
4.14	Case 1 system for treating solvent extraction wastes — radwaste impounded; nitrate released	332
4.15	Case 2 system for treating solvent extraction wastes — radwaste and nitrate impounded	333
4.16	Simplified flow diagram for the Case 3 solvent extraction waste treatment systems	334

Figure		Page
4.17	Case 3 systems for radwaste precipitation and drying and for biofeed preparation	335
4.18	Case 3 systems for biological nitrification and denitrification	336
4.19	Case 3 systems for treating the solvent extraction wastes — lime recovery and biomass incineration	337
4.20	Simplified flow diagram for the Case 4 solvent extraction waste treatment systems	338
4.21	Case 4 systems for treating the solvent extraction raffinate — radwaste precipitation and cementing; ammonia recovery; and chemwaste precipitation	339
4.22	Solvent treatment system with water and ammonia recycle — Case 4.	340
4.23	Nitrate concentration system for surplus weak acids — Case 4	341
4.24	Nitric acid recovery system for solvent extraction wastes — Case 4	342
4.25	Magnesia recovery system for treating solvent extraction wastes — Case 4	343
4.26	Treatment system for fluoride scrubber liquors — Case 1	344
4.27	Treatment system for water fluoride scrubber liquors — Cases 2 and 3	345
4.28	Potassium hydroxide regeneration system for fluoride scrubber liquors — Cases 2-4	346
4.29	Summary of Case 1 liquid radwaste-chemwaste treatment systems for the model SX-F UF_6 plant	347
4.30	Summary of Case 2 liquid radwaste-chemwaste treatment systems for the model SX-F UF_6 plant	348
4.31	Summary of Case 3 liquid radwaste-chemwaste treatment systems for the model SX-F UF_6 plant	349
4.32	Summary of Case 4 liquid radwaste-chemwaste treatment systems for the model SX-F UF_6 plant	350
7.1	Pathways for external and internal exposure of man.	351

FOREWORD

This is the final report in a series of cost/benefit studies for nuclear fuel cycle radioactive waste treatment systems. In order to be consistent in all the reports in this series, the costs are based on 1973 dollars and, except where noted, the methodology and assumptions for the radiological doses are based on ORNL-4992, A Methodology for Calculating Radiation Doses from Radioactivity Released to the Environment (March 1976), by G. G. Killough and Larry R. McKay.

The resulting doses to the individuals are conservative and do not include recent information on the solubility and particle size of materials released to the environment for use in determining dose conversion factors. This report contains hypothetical studies and is not intended to be an environmental assessment of any existing UF_6 plant where the capacity, plant feed, waste treatment efficiencies, and environmental parameters may differ from the model.

CORRELATION OF RADIOACTIVE WASTE TREATMENT COSTS AND THE ENVIRONMENTAL IMPACT OF WASTE EFFLUENTS IN THE NUCLEAR FUEL CYCLE — CONVERSION OF YELLOW CAKE TO URANIUM HEXAFLUORIDE. PART II. THE SOLVENT EXTRACTION—FLUORINATION PROCESS

M. B. Sears
E. L. Etnier
G. S. Hill
B. D. Patton
J. P. Witherspoon
S. N. Yen

ABSTRACT

A cost/benefit study was made to determine the cost and effectiveness of radioactive waste (radwaste) treatment systems for decreasing the release of radioactive materials and chemicals from a model uranium hexafluoride (UF_6) production plant using the solvent extraction—fluorination process, and to evaluate the radiological impact (dose commitment) of the released materials on the environment. The model plant processes 10,000 metric tons of uranium per year. Base-case waste treatment is the minimum necessary to operate the process. Effluents meet the radiological requirements listed in the Code of Federal Regulations, Title 10, Part 20 (10 CFR 20), Appendix B, Table II, but may not be acceptable chemically at all sites. Additional radwaste treatment techniques are applied to the base-case plant in a series of case studies to decrease the amounts of radioactive materials released and to reduce the radiological dose commitment to the population in the surrounding area. The costs for the added waste treatment operations and the corresponding dose commitment are correlated with the annual cost for treatment of the radwastes. The status of the radwaste treatment methods used in the case studies is discussed. Much of the technology used in the advanced cases will require development and demonstration, or else is proprietary and unavailable for immediate use. The methodology and assumptions for the radiological doses are found in ORNL-4992.

1.0 SUMMARY

A study was made to determine the dollar cost and effectiveness of radwaste-chemwaste treatment systems for decreasing the amounts of radioactive materials and chemicals released from a model uranium hexafluoride (UF_6) production plant using the solvent extraction—fluorination (SX-F) process. A second objective was to estimate the radiological impact (50-year dose commitment) of the released radioactive materials on the environment. A UF_6 production facility purifies the semirefined uranium ore concentrate, called yellow cake, produced by the mills and converts it to UF_6 suitable for feed to the enrichment plants.

1.1 Model Plant

The model UF_6 plant processes 10,000 metric tons (MT) of uranium per year operating on a 300-day-per-year basis. Eighty-five percent of the plant feed is produced by acid leach mills and 15% by alkaline leach mills. About 14,000 Ci of radioactivity, most of which is natural uranium or the short-lived daughters ^{234}Th and ^{234m}Pa, enters the plant each year. Essentially all the uranium leaves the plant as UF_6 product. The ^{234}Th and ^{234m}Pa decay on-site. In the solvent extraction—fluorination process, most of the other radioactive impurities in the plant feed leave the plant as nitrates dissolved in the solvent extraction raffinate; this waste is treated to precipitate the radioactive materials. The radwaste sludges are impounded on-site in Cases 1 and 2 and prepared for shipment off-site to an approved repository in Cases 3 and 4. The treatment systems for liquid fluoride wastes from off-gas scrubbers generate large quantities of chemwaste solids containing very low levels (only slightly above background) of radioactive materials; these wastes are impounded on-site. The radionuclides of interest are ^{238}U, ^{235}U, ^{234}U, ^{230}Th, ^{226}Ra, ^{234}Th, ^{234m}Pa, and ^{222}Rn.

Off-site releases of radioactive materials consist of airborne dusts, radon gas, and both dissolved and suspended solids carried by liquid effluents to surface streams. In the most advanced case, there is no release of liquid bearing radioactive materials. Settling basins are lined

with an impervious, synthetic material to minimize seepage or leaching of stored solids by natural waters.

Two levels of ^{230}Th and ^{226}Ra impurities in the feed are considered--a "low-impurity" feed containing 2800 pCi of ^{230}Th and 200 pCi of ^{226}Ra per gram of U_{nat}, and a "high-impurity" feed containing 14,200 pCi of ^{230}Th and 1600 pCi of ^{226}Ra per gram of U_{nat}. The major emphasis of the study is on the "low-impurity" feed, which is a composite of the yellow cake produced by domestic mills in recent years. For comparative purposes the impact of a plant processing a "high-impurity" feed, which is the composite product of the model uranium mills described in ORNL-TM-4903,* is also presented.

1.2 Case Studies and Assumptions

Waste treatment. Four conceptual case studies and their corresponding flowsheets are presented for treating the effluents from the model UF_6 production plant (Sect. 4.0). The waste treatment systems consist of methods which (1) reduce the amount of airborne radioactive dusts released, (2) reduce the amount of noxious gases released, (3) reduce the amount of radioactive materials released in liquid effluents, (4) reduce the amount of chemicals released in liquid effluents, (5) treat liquid streams for recycle to the process, and (6) provide additional isolation of solid wastes from the environment. No treatment is provided for radon. The general plan is shown in Table S-1. A more detailed summary is presented in Table 1.1 (page 219). Case 1 represents the minimum treatment necessary to operate the process. Effluents are in compliance with the radiological requirements listed in 10 CFR 20, Appendix B, Table II, but may not meet the 40 CFR 190 environmental standards or be acceptable chemically at all sites. Waste treatment is done principally for uranium recovery and reduction of noxious fumes. Case 1 serves as the base for the cost/benefit analysis; it does not necessarily describe current industrial practice. Case 2 treatment includes secondary bag filters on dust control streams,

*M. B. Sears, R. E. Blanco, R. C. Dahlman, G. S. Hill, A. D. Ryon, and J. P. Witherspoon, Correlation of Radioactive Waste Treatment Costs and the Environmental Impact of Waste Effluents in the Nuclear Fuel Cycle for Use in Establishing "As Low As Practicable" Guides - Milling of Uranium Ores, ORNL/TM-4903, Vol. I (May 1975).

Table S-1. Conceptual waste treatment case studies

	Case 1	Case 2	Case 3	Case 4
Level of waste treatment	Minimum, marginally licensable	Practical limit of technology today	Airborne: limit of technology in the public domain; liquid nitrate: not available for immediate use	Not available for immediate use: proprietary or in an early stage of development
Airborne effluents	Primary and sometimes secondary treatment of process off-gas for particulates and noxious chemicals	Primary and secondary treatment of all process off-gas	Case 2 plus filtration of building ventilation effluent for particulates	Case 2 plus improved filtration of building ventilation effluent; HEPA filters on process off-gas; more efficient chemical usage in process
Liquid nitrate waste	Precipitate radwaste; release nitrate	Precipitate radwaste; impound nitrate	Precipitate radwaste; biological nitrification/ denitrification; release purified wastewater	Precipitate radwaste; recover HNO_3, NH_3, and water
Liquid fluoride waste	Combine with lime-treated nitrate waste which precipitates fluoride; release neutralized waste	Fluoride treatment; recycle KOH streams; release water	Same as Case 2	Case 2 plus more efficient chemical use in process
Solid radwaste	Impound on-site	Impound on-site	Dry and drum (to burial ground)	Incorporate in cement and drum (to burial ground)
Solid chemwaste	Impound on-site	Impound on-site	Impound on-site	Impound on-site

secondary scrubbers on process off-gas streams, impoundment of the liquid nitrate waste, and chemical treatment of liquid fluoride wastes. In general, Case 2 represents the practical limits of current technology. However, impoundment is only a temporary solution for liquid nitrate wastes. Additional costs and doses may be incurred in disposing of the nitrate. Cases 3 and 4 add treatments to the building ventilation effluent and use methods on the process off-gas which are either proprietary or in an early stage of development; thus the systems are not available for immediate use. Biological denitration is used in Case 3 to destroy the nitrate, while in Case 4 the nitrate values in the waste are recovered as nitric acid suitable for recycle. Case 4 also includes an evaporator, so that there is no release of liquids bearing radioactive materials, and incorporates the solid wastes, containing the bulk of the ^{226}Ra and ^{230}Th, in cement to provide additional isolation in the event of drum failure.

The amounts of radioactive materials (the source terms) and chemicals released, as well as the solid wastes generated, are calculated for each case (Sect. 4.0). The various assumptions made in estimating the makeup of the feed to the plant, selecting the flows to the waste treatment systems, and determining the treatment efficiency ratings are realistically conservative. That is, source terms are based on operating data where possible. When such data are not available, assumptions are chosen which tend to make the source terms or costs slightly high.

Doses. The radiological impact (50-year dose commitment, Sect. 7.0) for each case is assessed at a midwestern site characteristic of contemporary nuclear facilities including UF_6 production, and at a New Mexico site to illustrate the effects of siting a plant near the uranium mills. Doses are estimated for total body, bone, lung, kidney, gastrointestional (GI) tract, thyroid, muscle, spleen, testes, and ovaries. Meteorologic data are derived from nearby first-order weather stations, and the population distribution is obtained from census tapes for the regions around several midwestern nuclear facilities or western uranium mills respectively. Conservative (i.e., maximizing) assumptions are used in defining the movement of radionuclides in the environment and in selecting food and liquid consumption patterns. Estimates are presented of the maximum dose that an

adult living 0.5 mile (800 m) downwind from the model UF_6 plant might receive as a result of exposure to airborne plant effluents for 1 year and consuming food produced 0.5 mile downwind of the plant. A 16-ft (5-m) release height is assumed, which maximizes the doses. Dose reduction factors which may be applied for other release heights, food production and consumption pathways, and distances from the plant are presented (Tables 7.10-7.12). The dose to the total population (person-rem) within a 55-mile (88-km) radius of the model plant is estimated. The airborne radioactive effluents are predominantly particulates. Since most particulates are deposited on the ground within 55 miles, there is little, if any, radiological impact to the population beyond the 55-mile radius.

Annual dose commitments to individuals from liquid effluents are presented on two bases — after dilution in a 15-cfs (0.4-m^3/sec) stream, and after the 15-cfs stream flows into a 1300-cfs (37-m^3/sec) river. Population dose is not estimated for liquid effluents since in a generic report it is not practical to predict a population distribution along a river or dilution by tributary streams.

Costs. The total annual costs for reduction of the radiological dose commitment and chemical exposure to the population surrounding the model UF_6 plant are summarized in Sect. 6.0. The total annual costs include costs for radwaste and chemwaste treatment of airborne and liquid effluents plus the cost of storing solids on-site or packaging solid wastes ready for shipment off-site. However, they do not include the costs of shipment, permanent disposal of solid wastes, decommissioning the plant, process changes at the uranium mills to meet new specifications on the chemical composition of the UF_6 plant feed, or expenditures for the development of advanced treatment methods. Costs are estimated in mid-1973 dollars for the construction of a new plant to be consistent with other reports in this series. The costs do not include redundant (parallel) treatment units to ensure continued operation of complex systems in case one of the units should become inoperable.

1.3 Radiological Impact and Cost/Benefit Analysis for Feed Containing "Low" Levels of ^{230}Th and ^{226}Ra Impurities

The annual cost of treatments which reduce releases from the model UF_6 plant processing typical yellow cake feed is correlated with the radiological impact (50-year dose commitment), the quantity of radioactive material released, or the quantity of chemicals released in Sect. 8.1. Assumptions tend to maximize the doses and, in some cases, to minimize the costs. Methods of treating the various effluent streams are assessed separately before they are combined in the summary cases. Cost/benefit analyses of the combined treatment methods reveal only gross correlations and mask many components of the cases where comparisons can be made regarding the relative cost/benefit of alternative procedures. There is uncertainty in the source terms for ^{226}Ra and ^{230}Th, which is reflected in the dose estimates and cost/benefit analysis; however, this uncertainty does not affect the relative importance of the treatment methods.

Airborne effluents. The maximum annual individual doses at 0.5 mile (800 m) from the model plant processing the "low-impurity" feed (e.g., 2800 pCi of ^{230}Th and 200 pCi of ^{226}Ra per gram of U_{nat}) and the doses to the population out to 55 miles (88 km) from airborne effluents are presented in Tables S-2 and 8.1 for the midwestern site. The individual total-body dose is reduced from 3.0 mrem in Case 1 to 1.0 mrem in Case 2, and the bone dose from 28 mrem to 9 mrem respectively. The population total-body dose is reduced from 3.2 person-rem in Case 1 to 1.0 person-rem in Case 2. For airborne Cases 1/2, the incremental cost/benefit is $120,000/person-rem total body and $11,000/person-rem bone. At the New Mexico site, individual doses are slightly higher than at the midwestern site, but population doses are much lower because the area is sparsely settled (Table 8.2). Further airborne dose reductions beyond Case 2 are possible but more expensive. Two-thirds of the releases in Case 2 occur through the building ventilation effluent, which is expensive to treat because of the large volume of air that must be handled ($380,000/person-rem total body and $44,000/person-rem bone at the midwestern site). The amount of gaseous HF released is reduced from 24 kg/day in Case 1 to 0.4 kg/day in Case 2 (Table 8.1). Although further reduction is possible,

Table S-2. Annual costs and total-body doses for the model UF_6 plant chemwaste-radwaste treatment case studies — feed containing "low" levels of ^{230}Th and ^{226}Ra impurities[a]

	Case 1	Case 2	Case 3	Case 4
Annual cost increase over base, $ (mid-1973 dollars)	Base	7.12E+5[b]	2.62E+6	3.36E+6
Airborne effluents				
Maximum annual dose to individual at 0.5 mile (800 m), mrem	3.0	1.0	0.4	<0.01
Annual dose to population out to 55 miles (88 km), person-rem	3.2	1.0	0.4	<0.01
Liquid effluents				
Annual dose to individual after dilution in:				
15-cfs stream (0.4-m^3/sec), mrem	0.9[c]	<0.01[d]	0.8	e
1300-cfs river (37-m^3/sec), mrem	0.01	<0.01[d]	0.01	e

[a]10,000 MT of uranium/year; solvent extraction—fluorination process; midwestern site; feed contains 2800 pCi of ^{230}Th and 200 pCi of ^{226}Ra per gram of U_{nat}.

[b]Does not include the cost of final disposal of liquid nitrate waste.

[c]Case 1 release to 15-cfs (0.4-m^3/sec) stream would not be acceptable chemically at many sites.

[d]In addition, there is a potential for accidental releases or seepage from the liquid nitrate impoundment.

[e]Case 4 has no liquid radioactive release.

the technology is both expensive and proprietary. Other gaseous chemical releases are discussed in Sects. 4.0 and 8.0.

The estimated doses to the individual receiving the maximum exposure represent the probable upper limit and are based on a number of maximizing assumptions about both the source terms and the environmental pathways. It is unlikely that all these maximizing assumptions would apply collectively to any one plant. Doses from a specific plant might be significantly lower than the doses estimated for the generic model. For example, the use of a 100-ft (30-m) release height instead of a 16-ft (5-m) height would reduce the maximum dose to an individual by a factor of 3 (Table 7.11). Removing the land in the immediate vicinity of the plant from food production would reduce the dose to the bone (the critical organ) by a factor of 2 (Tables 7.10a-7.10c).

Liquid effluents. Annual individual doses from liquid effluents after dilution by a 1300-cfs (37-m^3/sec) river are 0.01 mrem total body and 0.15 mrem bone in Case 1. Doses from using the waters of the 15-cfs (0.4-m^3/sec) stream are 90 times higher. It is unlikely that an individual would routinely use the 15-cfs stream as a source of drinking water or fish, or as a locale for swimming because of its small size and its high chemical content [20 MT/day in Case 1 (Table 8.5).] Case 1 illustrates that, at most sites, relatively simple treatment with $BaCO_3$ (99% radium removal) and lime is sufficient to remove the radioactive materials.

For the model SX-F UF_6 plant, the release or potential for release of large quantities of chemicals, in particular nitrate and fluoride, to surface streams is of greater concern than the radiological releases. Therefore, the primary emphasis of the liquid waste treatment case studies is the removal of chemicals. Case 2, at an annual cost increase of $304,000, provides impoundment of the liquid nitrate wastes; for an increase of $152,000, it provides lime treatment of fluoride-bearing scrubber liquors and regeneration and recycle of KOH scrubber solutions. This case is effective in reducing chemical releases to about 90 kg/day (principally K_2SO_4); the dose from using the 1300-cfs stream in Case 2 is less than 0.001 mrem above background. Impoundment of the nitrate wastes is a temporary solution, but it is the only fully developed and immediately available

alternative to releasing these wastes. Additional costs, and perhaps also radiological exposure, may be incurred in disposing of the accumulated nitrate wastes when the lagoons are decommissioned. In Case 2 there is also the potential for accidental releases of nitrate and radioactive materials via dike failure or by seepage if the integrity of the liner should fail.

The advanced case studies add treatment which provides a long-term solution to the nitrate wastes. Case 3 uses biological nitrification and denitrification in a system similar to an activated-sludge sewage plant to destroy both the ammonium ions (a biological precursor of nitrate in the environment) and the nitrate ions. The treated wastewater, which carries about 4 MT of chemicals (principally $NaHCO_3$) per day plus small quantities of radioactive materials, is then released to a surface stream. Case 4 uses thermal denitration of $Mg(NO_3)_2 \cdot 6H_2O$ with recovery of nitric acid from the off-gas for recycle. It includes an ozone sparge to prevent the chloride impurity from accumulating in the recycle acid circuit. Rectifier overheads containing traces of nitric acid are released, but there are no effluents containing radioactive materials in Case 4. Sodium ions create serious difficulties in the calciner; therefore, Case 4 places new low-sodium restrictions on the yellow cake feed. The difference in the annual costs of the advanced nitrate treatment systems appears to be small--$1.53 million for Case 3 compared with a Case 4 cost of $1.05 million to the UF_6 plant operator plus an estimated $0.55 million to the mill operators in meeting the low-sodium specification. Case 4 is more fail-safe since there is no danger that toxic materials in the waste will cause system poisoning, which is quite possible in a biological treatment system; however, it has the disadvantage that backfitting would be necessary at some mills to produce low-sodium yellow cake.

Solid radwaste. The principal solid radwaste is the sludge generated in treating the nitrate wastes from solvent extraction. These wastes contain unrecovered uranium, at levels comparable to uranium ores, and small quantities of ^{226}Ra and ^{230}Th that are present as impurities in the yellow cake feed to the plant. The wastes are a potential long-term source of ^{222}Rn gas from the decay of ^{226}Ra.

In Cases 1 and 2 the radwaste sludge is impounded on-site in a lined basin. This waste, whose disposition is at present unclear, is ultimately expected to be shipped off-site for disposal either in a burial ground or in a mill tailings pile. If the wastes are shipped wet to a uranium mill for processing to recover the uranium, the cost and radiological releases from packaging will be relatively small. Case 3 provides for drying and drumming the solids at an annual cost increase of $315,000. In Case 4 the radwaste solids are incorporated in cement to provide better isolation from the environment in the event the drums should fail. The annual cost of cementing and drumming the Case 4 radwaste is $741,000. This does not include the additional expenses incurred in the shipment and burial of the cemented wastes. Cementing reduces the potential long-term radon release as well as the potential for leaching by natural waters. The potential benefit of cementing the radwaste sludge must be evaluated in terms of a specific waste disposal site, which is beyond the scope of this study. The solid radwaste case studies are not directly comparable because the liquid nitrate treatment systems vary with regard to the quantity of solid waste generated.

The liquid waste treatment systems also generate large quantities of solid CaF_2 chemwaste from the lime treatment of fluoride scrub liquors. In addition, Case 4 has a $CaSO_4 \cdot 2H_2O$ chemwaste from the nitrate treatment system. These wastes are nearly insoluble and contain levels of radioactive materials which are barely distinguishable from natural background. They are inpounded on-site in settling basins lined with an impervious, synthetic material. Costs for the impoundment basins are considered to be part of the liquid waste treatment. Other chemwastes are discussed in Sect. 4.0.

1.4 Radiological Impact and Cost/Benefit Analysis for Feed Containing "High" Levels of ^{230}Th and ^{226}Ra Impurities

Recent sampling of UF_6 plant feed indicates that the "low" levels of ^{230}Th and ^{226}Ra impurities cited in Sect. 1.3 are the most probable concentrations that will occur in the plant feed. While unlikely, higher concentrations might occur. For comparison, a brief assessment of a model plant for a feed containing "high" levels of ^{230}Th and ^{226}Ra (e.g., 14,200 pCi of ^{230}Th and 1600 pCi of ^{226}Ra per gram of U_{nat}) is considered in this section.

The maximum annual individual doses at 0.5 mile (800 m) from the model plant processing the "high-impurity" feed and the doses to the population out to 55 miles (88 km) from airborne effluents are presented in Tables S-3 and 8.6 for the midwestern site. The individual total-body dose is reduced from 4.0 mrem in Case 1 to 1.8 mrem in Case 2, and the bone dose from 53 mrem to 21 mrem respectively. The population total-body dose is reduced from 3.8 person-rem in Case 1 to 1.6 person-rem in Case 2. The bone doses are nearly double those from the plant processing the "low-impurity" feed (Table S-2). For airborne Case 1/2, the incremental cost/benefit is $116,000/person-rem total body and $9,000/person-rem bone. Individual doses at the New Mexico site are higher than those at the midwestern site; however, population doses are much lower because the area is sparsely settled (Table 8.7). Further airborne dose reductions beyond Case 2 are possible but more expensive.

The estimated doses to the individual receiving the maximum exposure represent the probable upper limit for the "high-impurity" feed and are based on a number of maximizing assumptions. It is unlikely that all of these assumptions would apply collectively to any one plant. Doses from a specific plant might be significantly lower than those estimated for the generic model. For example, the use of a 100-ft (30-m) release height instead of a 16-ft (5-m) height would reduce the maximum dose to an individual at the midwestern site by a factor of 3 (Table 7.11). Removing the land in the immediate vicinity of the plant from food production would reduce the dose to the bone (the critical organ) by about 30% (Tables 7.20 and 7.21).

The relationships for treating liquid effluents from the model plant processing the "high-impurity" feed are similar to those for the "low-impurity" feed. The model assumes that more efficient $BaCO_3$ treatment for 99.8% radium removal is applied in the base case. Under these conditions, the annual individual dose from using the 1300-cfs river is 0.02 mrem total body and 0.3 mrem bone in Case 1.

Solid wastes are similar to those described in Sect. 1.3, except that they will contain larger quantities of ^{230}Th, ^{226}Ra, and associated daughter products.

Table S-3. Annual costs and total-body doses for the model UF_6 plant chemwaste-radwaste treatment case studies — feed containing "high" levels of ^{230}Th and ^{226}Ra impurities[a]

	Case 1	Case 2	Case 3	Case 4
Annual cost increase over base, $ (mid-1973 dollars)	Base	7.12E+5[b]	2.62E+6	3.36E+6
Airborne effluents				
Maximum annual dose to individual at 0.5 mile (800 m), mrem	4.0	1.8	0.7	0.05
Annual dose to population out to 55 miles (88 km), person-resm	3.8	1.6	0.6	0.04
Liquid effluents				
Annual dose to individuals after dilution in:				
15-cfs stream (0.4-m^3/sec), mrem	1.5[c]	<0.01[d]	1.5	e
1300-cfs river (37-m^3/sec), mrem	0.02	<0.01[d]	0.02	e

[a]10,000 MT of uranium/year; solvent extraction — fluorination process; midwestern site; feed contains 14,200 pCi of ^{230}Th and 1600 pCi of ^{226}Ra per gram of U_{nat}.

[b]Does not include cost of final disposal of liquid nitrate waste.

[c]Case 1 release to 15-cfs (0.4-m^3/sec) stream would not be acceptable chemically at many sites.

[d]In addition, there is a potential for accidental releases or seepage from the liquid nitrate impoundment.

[e]Case 4 has no radioactive release.

1.5 Contribution of the Cost of Radwaste Treatment to UF_6 Conversion and Total Nuclear Power Costs

The estimated 1973 capital cost of the base plant, including the Case 1 off-gas treatment system, is $35 million. Capital costs for the radwaste treatment systems in Cases 2-4 range from $2.23 million to $7.90 million, or 6 to 23% of the cost of the base plant. The annual cost increases over the base case for radwaste-chemwaste treatment range from $712,000 to $3,362,000 and are equivalent to a contribution to power of $0.0013 to 0.0062 mill/kWhr. Thus, while absolute dollar costs are high, the contribution to total power generation costs is low.

2.0 INTRODUCTION

This study was performed to determine the cost and effectiveness of additional or alternative radwaste-chemwaste treatment systems and internal process changes that are used, or could be used, at UF_6 conversion plants to decrease the amount of radioactive materials and chemicals released to the environment. A second objective is to estimate the radiological impact (50-year dose commitment) of these releases on the environment. The effectiveness of the alternate treatment systems under consideration is measured by comparing the quantities of radioactive materials released (the "source terms") by the various systems. The radiological impact of each system on the environment is compared with the radwaste treatment cost as the basis for a cost/benefit analysis.

The function of a uranium conversion and UF_6 production facility is to purify the semirefined uranium ore concentrate (i.e., yellow cake) produced by the mills and to convert it to UF_6 suitable for feed to the enrichment plants. The radioactive materials are natural uranium in secular equilibrium with ^{234}Th and ^{234m}Pa, plus small amounts of ^{230}Th, ^{226}Ra, and other uranium daughters. All of the radioactivity is of natural origin in the earth's crust. The radioactive wastes are either prepared for shipment off-site or impounded in on-site storage basins. Only small fractions of the radioactive materials and noxious chemicals are released as airborne particulates and gases. Liquid effluents contain varying quantities of radioactive materials and chemicals. In the most advanced case, all liquid streams bearing radioactive materials are treated and the water is recycled to the process.

This report presents a general overview of the UF_6 conversion industry and a detailed assessment of a model solvent extraction—fluorination (SX-F) plant. The assessment of a model fluorination—fractionation (F-F) plant was reported previously as Part I of this study.[1] Model flowsheets that serve to illustrate the waste treatment methods have been developed from the best available information, but are not necessarily representative of either existing or future plants. The radiological impact is considered at two sites: the model midwestern site and the model New Mexico site.

Case 1, which serves as the base for the cost/benefit analysis, contains the minimum treatment necessary for economically operating the process, including uranium recovery and treatment for noxious fumes. Increasingly efficient radioactive waste treatment systems are added to the "base" plant, and the annual cost and environmental impact of each case are calculated. It is not feasible to include all possible variations of base plants and radioactive waste treatment systems; however, sufficient information is provided in this study to permit the costs and impacts for other radioactive waste treatment systems to be estimated by extrapolation or interpolation from the data provided. The advanced cases are contingent on technology which ranges from that currently in use to the foreseeable limits of available technology on the basis of expected typical operations over the next 30 years. Several of the advanced treatment methods are not presently available for industrial application and will require development work and/or access to proprietary or classified information before the technology can be "reduced to practice." However, it is necessary to use such technology to predict cost/benefit relationships over the next few decades.

This report is the last in a series of studies on the nuclear fuel cycle. Other reports in the series are concerned with reprocessing LWR fuels,[2] fabricating LWR fuels containing enriched uranium,[3] milling uranium ores,[4,5] fabricating LWR fuels containing plutonium,[6] fabricating HTGR fuels containing ^{233}U and thorium,[7] reprocessing HTGR fuels,[8] and conversion of recycle uranium to UF_6.[9]

2.1 References

1. M. B. Sears, R. E. Blanco, B. C. Finney, G. S. Hill, R. E. Moore, and J. P. Witherspoon, Correlation of Radioactive Waste Treatment Costs and the Environmental Impact of Waste Effluents in the Nuclear Fuel Cycle — Conversion of Yellow Cake to Uranium Hexafluoride. Part I. The Fluorination-Fractionation Process, ORNL/NUREG/TM-7 (September 1977).

2. B. C. Finney, R. E. Blanco, R. C. Dahlman, G. S. Hill, F. G. Kitts, R. E. Moore, and J. P. Witherspoon, Correlation of Radioactive Waste Treatment Costs and the Environmental Impact of Waste Effluents in The Nuclear Fuel Cycle — Reprocessing Light Water Reactor Fuels, ORNL/NUREG/TM-6 (January 1977).

3. W. H. Pechin, R. E. Blanco, R. C. Dahlman, B. C. Finney, R. B. Lindauer, and J. P. Witherspoon, Correlation of Radioactive Waste Treatment Costs and the Environmental Impact of Waste Effluents in the Nuclear Fuel Cycle for Use in Establishing "As Low As Practicable" Guides — Fabrication of Light-Water Reactor Fuel from Enriched Uranium Dioxide, ORNL/TM-4902 (May 1975).

4. M. B. Sears, R. E. Blanco, R. C. Dahlman, G. S. Hill, A. D. Ryon, and J. P. Witherspoon, Correlation of Radioactive Waste Treatment Costs and the Environmental Impact of Waste Effluents in the Nuclear Fuel Cycle for Use in Establishing "As Low As Practicable" Guides — Milling of Uranium Ores, ORNL/TM-4903, Vol. 1 (May 1975).

5. A. D. Ryon and R. E. Blanco, Correlation of Radioactive Waste Treatment Costs and the Environmental Impact of Waste Effluents in the Nuclear Fuel Cycle for Use in Establishing "As Low As Practicable" Guides — Appendix A. Preparation of Cost Estimates for Volume 1, Milling of Uranium Ores, ORNL/TM-4903, Vol. 2 (May 1975).

6. W. S. Groenier, R. E. Blanco, R. C. Dahlman, B. C. Finney, A. H. Kibbey, and J. P. Witherspoon, Correlation of Radioactive Waste Treatment Costs and the Environmental Impact of Waste Effluents in the Nuclear Fuel Cycle for Use in Establishing "As Low As Practicable" Guides — Fabrication of Light-Water Reactor Fuels Containing Plutonium, ORNL/TM-4904 (May 1975).

7. J. W. Roddy, R. E. Blanco, G. S. Hill, R. E. Moore, M. L. Randolph, R. D. Seagren, and J. P. Witherspoon, Correlation of Radioactive Waste Treatment Costs and the Environmental Impact of Waste Effluents in the Nuclear Fuel Cycle — Fabrication of High-Temperature Gas-Cooled Reactor Fuel Containing Uranium-233 and Thorium, ORNL/NUREG/TM-5 (September 1976).

8. W. Davis, Jr., R. E. Blanco, B. C. Finney, G. S. Hill, R. E. Moore, and J. P. Witherspoon, Correlation of Radioactive Waste Treatment Costs and the Environmental Impact of Waste Effluents in the Nuclear Fuel Cycle — Reprocessing of High-Temperature Gas-Cooled Reactor Fuel Containing U-233 and Thorium, ORNL/NUREG/TM-4 (May 1976).

9. J. W. Roddy, R. E. Blanco, B. C. Finney, G. S. Hill, R. E. Moore, and J. P. Witherspoon, Correlation of Radioactive Waste Treatment Costs and the Environmental Impact of Waste Effluents in the Nuclear Fuel Cycle — Conversion of Recycle Uranium to UF_6, ORNL/NUREG/TM-37 (August 1977).

3.0 OBJECTIVES AND ASSUMPTIONS

3.1 Objectives

The objectives of this study are: (1) to determine the cost, in 1973 dollars, that would be required to reduce the amounts of radioactive materials and chemicals released to the environment from conceptual UF_6 conversion plants; and (2) to evaluate the radiological impact (50-year dose commitment) of these releases. The definition of the incremental value of additional radioactive waste treatment equipment, which is an important part of the basic objective, is emphasized in the study. Generally, these values will not change significantly with the size of the plant. For example, the volume of waste effluent to be treated generally increases with the plant size, and larger treatment systems are required; however, essentially the same fraction is released for large and small systems. Hence a larger total amount of radioactive material is released for the larger unit when operating on the same type, but larger volume, of radioactive effluent. The incremental and absolute values derived in this study for a single size of conceptual plant can thus be extrapolated to larger or smaller plants. The calculated total amounts of radioactive materials released are also defined, but are less important in this study since they are expected to vary with the plant size and with the ^{226}Ra and ^{230}Th contents of the plant feed. The volumes and composition of radioactive wastes are based on model flowsheets developed from the available information.

Estimates are made of the average radioactive and nonradioactive releases and the cost of radioactive waste treatment. In a similar study for nuclear power reactors,[1] primary emphasis was placed on maintaining continuous operation of the power plant. Consequently, the more complex radioactive waste treatment systems contained redundant (parallel) treatment units to ensure continued operation in case one of the units should become inoperable. In the UF_6 conversion study, less emphasis is placed on continuous operation since the plant could temporarily cease operations in the event that a major radioactive waste treatment unit failed. Only potential releases from normal operations, including anticipated operational occurrences, have been considered in this study.

3.2 Selection of the Model UF_6 Plants

There are two types of UF_6 plants -- solvent extraction—fluorination (SX-F; five out of six refineries in the western world) (Sect. 4.1) and fluorination—fractionation (F-F). The primary difference between the two plants is whether the uranium is purified by solvent extraction before conversion to UF_6 or by fractional distillation of the UF_6 after conversion. Each type produces high-purity UF_6 which is suitable for use as feed to the enrichment plants. Both a model F-F plant (Part I) and a model SX-F plant (Part II) are considered because they generate different wastes with regard to liquid and solid volumes, bulk chemicals, and radioactive element concentration. Even similar processes such as reduction, hydrofluorination, and fluorination require different flowsheets at the two model plants. Insofar as possible, the internal plant flowsheets are designed to be representative of the industry today and for the foreseeable future. The UF_6 industry is highly competitive both domestically and internationally. Because some technology is proprietary, the study team did not have access to detailed flowsheets giving the compositions and flow rates of the various effluent streams. The models serve to illustrate the various waste treatment methods, but they do not necessarily correspond to existing or future plants.

Each model UF_6 plant has an annual capacity of 10,000 MT of uranium. The processes are assumed to operate 24 hr per day for 300 days a year with the exception of uranium recycle operations, which operate 8 hr per day. It is assumed that the plant has sufficient surge capacity to continue operation when one section is down. Costs are amortized over 15 years. The assessment of long-term environmental impact is based on a 30-year operating life.

Descriptions of the model flowsheets are discussed in relation to the waste treatment systems in Sect. 4.4.

3.3 Management of Radioactive Wastes

The most complex flowsheets in this study illustrate very low, but not zero, releases of radionuclides (Sect. 4.0).

Airborne effluents. Airborne effluents consist of radioactive particulates which are released through the dust control systems on dry materials handling operations, the process off-gas systems, and the building ventilation systems; noxious fumes such as HF, NO_x, H_2S, SO_2, and NH_3; and radon gas. Gaseous effluents are treated with filters and wet scrubbers to retain increasingly large fractions of the radioactive particulates, as well as noxious fumes. The case studies also include changes in internal processes and the plant feed which reduce the load to the waste treatment systems. Radon is a minor contributor to the dose; therefore, no radon treatment is provided.

Liquid effluents. Liquid effluents consist of a nitrate waste from solvent extraction which contains significant quantities of radioactive materials and fluoride scrub liquors with high chemical contents but low concentrations of radioactive materials. The base plant (Case 1) releases a large quantity of nitrate and ammonium salts with only the minimum treatment necessary to meet the requirements stipulated by 10 CFR 20. Both radwaste and chemwaste releases are reduced in subsequent case studies by impoundment, chemical treatment before liquid release, chemical treatment with liquid recycle, biological treatment before liquid release, evaporators with gaseous water release, and evaporators with water recycle or nitric acid recovery. The case studies also include changes in internal processes in the plant feed to reduce or eliminate certain waste streams. All settling basins and impoundment lagoons are lined with an essentially impervious, synthetic material to minimize seepage of radioactive materials and chemicals or potential leaching of stored solids by natural waters (see Regulatory Guide 3.13).[2] The most advanced case study has no release of liquid waste bearing radioactive materials to surface streams; however, it does contain provisions for release of nonradioactive wastes from the fluorine cells after treatment to remove fluorides and overheads from the nitric acid rectifier.

Solid waste. The principal solid radwaste is the sludge generated in treating the liquid wastes from solvent extraction. This waste contains uranium at levels comparable to the concentration in uranium ore, as well as long-lived ^{230}Th and ^{226}Ra at levels which are a little higher than

those in typical uranium mill tailings. In Cases 1 and 2 these solids are impounded on-site in a lined pit or in lagoons. In Case 3 they are dried and drummed for shipment. In the most advanced case (Case 4) the solid radwastes are incorporated in cement to isolate them from the environment and are drummed for shipment to a burial ground. Solids produced in the treatment of fluoride scrub liquors, which have low solubilities in water and contain only small concentrations of radioactive materials, are stored on-site in lined basins or pits. Dust collected on primary filters is automatically returned to the process. Vacuum cleaner systems are used for housekeeping, and the dust collected in them is processed through the scrap recovery system. Small amounts of miscellaenous wastes such as rags, clothing, spent filters, spent filter bags, and old drums are generated. Combustible wastes are incinerated. All miscellaneous wastes containing uranium are processed through scrap recovery. Materials such as old drums or spent filters are buried. The case studies do not address the costs of final disposal such as shipping and burial, or of decommissioning the plant, since they will vary with the location of the plant.

3.4 Cost Parameters

Capital and annual costs are estimated for the waste treatment systems that are added to the base plant in a series of case studies. The calculation of these incremental annual costs is a primary objective of the study. They are correlated with the changes in environmental impact for each case study in Sect. 8.0. The estimated costs are based on an amortization period of 15 years, although the operating lifetime of the plant is assumed to be 30 years. The costs are for new model plants; no attempt has been made to estimate backfitting costs for present plants. The capital cost of the base 10,000-MT/year UF_6 conversion plants is estimated as $35 million. Costs are estimated in terms of 1973 dollars to make this report consistent with others in the series.[3-10] Details of the cost estimating procedure are given in Sect. 6.0.

3.5 Equipment Operation

It is assumed that all radioactive wastes will be processed through treatment systems before discharge even though the radioactive content of the untreated waste is lower than "permissible" licensing levels. The equipment is adequately sized to ensure high operating flexibility and efficiency factors. This type of design provides extra assurance that radioactive releases will not exceed the calculated design levels.

3.6 Plant Siting

Two sites - a midwestern site and a New Mexico site - are considered for the model UF_6 conversion plant. The midwestern site is characteristic of contemporary commercial and DOE nuclear facilities. The New Mexico site was selected to illustrate the environmental impact of locating a UF_6 plant near the mills that provide the plant feed. An arid climate would have advantages over a midwestern climate for the solvent extraction plant. The western site has certain disadvantages because of limited water supplies and poor north-south transportation from the Wyoming, Colorado, and Utah mills. In addition, the highly sophisticated chemical technology used in these plants must be serviced by readily accessible major-parts suppliers, which are generally not available in western locations.

Site 1 is located on a plain in a rural midwestern area adjacent to a continuously flowing stream which empties into a large river. Cities with moderate populations and a large city are located within the survey area. Meteorological data are derived from the first-order weather station at St. Louis, Missouri. The population distribution was determined by averaging the distribution around several nuclear installations in the Midwest. Distributions for sites near St. Louis, Missouri, were included in the averaging. Site 2 is located in a sparsely populated western area. The population distribution is determined by averaging the distributions around several uranium mills in New Mexico and Wyoming. Meteorological data are derived from the first-order weather station at Albuquerque, New Mexico. Site 2 is also located adjacent to a continuously flowing stream which empties into a large river. Site parameters are described in detail in Sect. 7.0.

3.7 Radiological Impact

Radiation doses to the people and biota living near the model plants which may result from exposure to plant effluents under normal operating conditions are given in Sect. 7.0. Pathways both for the external radiation dose from sources outside the body and for the internal dose from sources within the body are considered. Immersion in the airborne particulates and radon gas as they are diluted and dispersed leads to external exposure; inhalation causes internal exposure. The deposition of radioactive particulates on the land surface leads to direct external exposure and to internal exposure by the ingestion of food products through various food chains. Similarly, swimming in waters containing radionuclides can lead to external exposure, whereas the harvest of fish or drinking from the waters can result in internal exposures.

The estimated radiation doses to individuals, the human population, and the biota are calculated for annular distances out to 55 miles in 22.5° sectors using the site parameters listed in Sect. 7.1. Doses to individuals are calculated for the total body and individual organs. Population doses (person-rem) are the sum of the doses to all individuals in the population considered. To be consistent with other reports in this series, the doses are estimated using the procedures described in ORNL-4992, A Methodology for Calculating Radiation Doses from Radioactivity Released to the Environment, by G. I. Killough and L. R. McKay. This is a conservative model based on the least favorable chemical form and particle size, and tends to maximize the doses.

3.8 References

1. USAEC—Directorate of Regulatory Standards, Final Environmental Statement Concerning Proposed Rule Making Action: Numerical Guides for Design Objectives and Limiting Conditions for Operation to Meet the Criterion "As Low As Practicable" for Radioactive Material in Light-Water-Cooled Nuclear Power Reactor Effluents, WASH-1258 (July 1973).

2. AEC Regulatory Guide 3.13, Guide for Acceptable Waste Storage Methods at UF_6 Production Plants, U.S. Atomic Energy Commission, Directorate of Regulatory Standards, Washington, D.C. (October 1973).

3. B. C. Finney, R. E. Blanco, R. C. Dahlman, G. S. Hill, F. G. Kitts, R. E. Moore, and J. P. Witherspoon, Correlation of Radioactive Waste Treatment Costs and the Environmental Impact of Waste Effluents in the Nuclear Fuel Cycle — Reprocessing Light-Water Reactor Fuels, ORNL/NUREG/TM-6 (January 1977).

4. W. H. Pechin, R. E. Blanco, R. C. Dahlman, B. C. Finney, R. B. Lindauer, and J. P. Witherspoon, Correlation of Radioactive Waste Treatment Costs and the Environmental Impact of Waste Effluents in the Nuclear Fuel Cycle for Use in Establishing "As Low As Practicable" Guides — Fabrication of Light-Water Reactor Fuel from Enriched Uranium Dioxide, ORNL-TM-4902 (May 1975).

5. M. B. Sears, R. E. Blanco, R. C. Dahlman, G. S. Hill, A. D. Ryon, and J. P. Witherspoon, Correlation of Radioactive Waste Treatment Costs and the Environmental Impact of Waste Effluents in the Nuclear Fuel Cycle for Use in Establishing "As Low As Practicable" Guides — Milling of Uranium Ores, ORNL-TM-4903, Vol. 1 (May 1975).

6. A. D. Ryon and R. E. Blanco, Correlation of Radioactive Waste Treatment Costs and the Environmental Impact of Waste Effluents in the Nuclear Fuel Cycle for Use in Establishing "As Low As Practicable" Guides — Appendix A. Preparation of Cost Estimates for Volume 1. Milling of Uranium Ores, ORNL-TM-4903, Vol. 2 (May 1975).

7. W. S. Groenier, R. E. Blanco, R. C. Dahlman, B. C. Finney, A. H. Kibbey, and J. P. Witherspoon, Correlation of Radioactive Waste Treatment Costs and the Environmental Impact of Waste Effluents in the Nuclear Fuel Cycle for Use in Establishing "As Low As Practicable" Guides — Fabrication of Light-Water Reactor Fuels Containing Plutonium, ORNL-TM-4904 (May 1975).

8. J. W. Roddy, R. E. Blanco, G. S. Hill, R. E. Moore, R. D. Seagren, and J. P. Witherspoon, Correlation of Radioactive Waste Treatment Costs and the Environmental Impact of Waste Effluents in the Nuclear Fuel Cycle — Fabrication of High-Temperature Gas-Cooled Reactor Fuel Containing Uranium-233 and Thorium, ORNL/NUREG/TM-5 (September 1976).

9. W. Davis, Jr., R. E. Blanco, B. C. Finney, G. S. Hill, R. E. Moore, and J. P. Witherspoon, Correlation of Radioactive Waste Treatment Costs and the Environmental Impact of Waste Effluents in the Nuclear Fuel Cycle — Reprocessing of High-Temperature Gas-Cooled Reactor Fuel Containing U-233 and Thorium, ORNL/NUREG/TM-4 (May 1976).

10. J. W. Roddy, R. E. Blanco, B. C. Finney, G. S. Hill, R. E. Moore, and J. P. Witherspoon, Correlation of Radioactive Waste Treatment Costs and the Environmental Impact of Waste Effluents in the Nuclear Fuel Cycle — Conversion of Recycle Uranium to UF_6, ORNL/NUREG/TM-37 (August 1977).

4.0 SOURCE TERMS FOR RELEASE OF RADIOACTIVE MATERIALS

The functions of a yellow cake conversion and UF_6 production facility are to purify the semirefined uranium ore concentrate produced by the mills and to convert it to UF_6 suitable for feed to the enrichment plants. These functions constitute the third step (mining, milling. conversion) in the preparation of natural uranium for use as nuclear fuels. The only radioactivity handled by the plant is from naturally occurring sources (i.e., there are no fission products).

The following sections describe the processing steps that produce the radwaste streams, the amounts and compositions of these wastes, the waste treatment methods that might be used, and the amounts of radioactive materials released (the source terms) for a model solvent extraction—fluorination (SX-F) UF_6 production plant. The principal radwaste is the solvent extraction raffinate, which is a liquid nitrate waste containing soluble radioactive materials as well as a variety of other chemicals. Sludges generated in treating the raffinate contain U_{nat}, ^{230}Th, and ^{226}Ra at levels that are a little higher than those in uranium mill tailings. In addition to the radwaste sludges, the conversion of the purified UO_3 to UF_6 generates a very low-level CaF_2 chemwaste sludge from treating off-gas scrub liquors for fluoride. Off-site releases of radioactive materials consist of airborne dusts, both dissolved and suspended compounds in liquid wastes, and small quantities of radon gas. Impoundment basins at the model plant are lined with a synthetic material to minimize the underground migration of radioactive materials that may occur as the result of seepage of liquid effluents or water leaching of stored solids.

A series of increasingly efficient (and increasingly expensive) radwaste treatment cases is presented for the model SX-F UF_6 production plant (Table 1.1). There are four conceptual case studies, which have been subdivided into airborne, liquid, and solid radwaste according to the type of plant effluent streams that must be treated. Uranium is a valuable commodity, and industry today uses sophisticated technology to minimize losses. Waste streams have high chemical contents because excess reagents are used, but they are contaminated with only small amounts of radioactive materials.

The removal of nonradioactive chemicals is also considered since (1) the advanced radwaste treatment methods must be designed on the basis of the chemical flowsheets, and (2) chemical releases are also of concern. These case studies are hypothetical and are not intended to be an assessment of any particular plant, which would have to be evaluated in terms of the specific parameters applicable at that site.

Generally, the release of radioactive materials decreases and the cost increases with increasing case number. Case 1, the base case, represents the minimum treatment and lowest cost. Plant effluents meet the radiological requirements of 10 CFR 20, Appendix B, Table II, but may not be acceptable chemically at all sites. Most Case 1 off-gas treatments are essential to the economical operation of the process and are, therefore, considered to be a part of the cost of the base plant rather than an environmental protection cost. In Case 1 the solvent extraction raffinate is treated to precipitate radioactive materials, the sludges are impounded, and the nitrate is released. Case 1 serves as the base case for the cost/benefit analysis; it does not necessarily represent current industrial practice. Case 2 treatment of process effluents generally represents the practical limit of existing technology in the public domain. Many of the Case 2 treatment methods are currently in use. In Case 2, the nitrate waste and associated sludges are impounded. Neither Case 1 nor Case 2 addresses the decommissioning of the plant or final disposal of the accumulated solvent extraction wastes. Additional costs and/or radioactive releases may be incurred in the future in disposing of these wastes. Cases 3 and 4 include treatment to destroy or recycle the nitrate, packaging of solid radwaste ready for shipment off-site, treatment of the building ventilation effluent, and internal process changes at both the uranium mill (to change the feed to the UF_6 plant) and at the UF_6 plant (to reduce the load to the waste treatment systems). Most of the Case 3 and Case 4 treatment methods are not available for immediate use either because the technology is in an early stage of development or because it is proprietary. In particular, the Case 3 biological denitrification and Case 4 nitric acid recovery systems have never been demonstrated for wastes from a modern SX-F UF_6 plant. Technical descriptions of the systems and the calculated amounts of radioactive materials that would be released are given in Sect. 4.4.

Two levels of ^{230}Th and ^{226}Ra impurities in the yellow cake feed to the plant are considered -- a "low-impurity" feed containing 2800 pCi of ^{230}Th and 200 pCi of ^{226}Ra per gram of uranium, and a "high-impurity" feed containing 14,200 pCi of ^{230}Th and 1600 pCi of ^{226}Ra per gram. The major emphasis is on the "low-impurity" feed option, which represents the composite product of domestic mills in recent years. This is the feed used in the assessment of the model F-F UF_6 plant as described in the Appendix to Part I of this study.[1] For comparative purposes, a "high-impurity" feed option corresponding to the feed discussed in Part I, Sects. 4-8, is also presented.

Operational information about an SX-F plant is limited. Uranium releases are estimated primarily by analogy to similar operations at an F-F UF_6 plant (Part I) or at a uranium mill.[1,2] Conservative assumptions are used in selecting treatment efficiency ratings that tend to maximize the amounts released. Releases of radioactive materials other than uranium are estimated on the basis of general chemical principles. No data are available on the amounts of ^{234}Th, ^{230}Th, and ^{226}Ra that cross with the uranium during solvent extraction; hence there is uncertainty in the source terms for the conversion of the purified UO_3 to UF_6. Uncertainty also exists concerning the chemical impurities in the yellow cake feed since UF_6 plants only analyze for impurities that may cause difficulties in the process. This leads to uncertainty in the quantity and chemical composition of the raffinate waste. Technical descriptions of the systems and the calculated amounts of radioactive materials that would be released are given in Sect. 4.4.

4.1 The Uranium Conversion and UF_6 Production Industry

In 1979 there were six uranium refining facilities in the western world for uranium ore concentrate (yellow cake): the Kerr-McGee Sequoyah plant (eastern Oklahoma),[3] the Allied Chemical plant (Metropolis, Illinois),[4] the DOE-Fernald refinery[5,6] (on standby in Ohio), the Eldorado Port Hope refinery (Canada),[7] the Springfields refinery (Great Britain),[8-10] and the Malvesi plant (France)[11,12] (Table 4.1). Five of these facilities use solvent extraction to purify the uranium and generate a large quantity of liquid nitrate waste. This technology is in the public domain. The sixth,

the Allied Chemical plant, uses the fluorination-fractionation (dry, hydrofluor) process which does not involve nitrate. Four plants — Kerr-McGee, Allied Chemical, Eldorado, and Springfields — produce UF_6 suitable for feed to the enrichment plants. Uranium hexafluoride is also made at the DOE gaseous diffusion plants at Paducah, Kentucky,[13] and Portsmouth, Ohio,[14] by using purified feed from a refinery or fuel reprocessing plant. While UF_6 is the primary product, the solvent extraction plants also have the capability of making "nuclear-grade" uranium dioxide (UO_2) and uranium tetrafluoride (UF_4). Some plants produce uranium metal as well.

The processes used in the central refineries and UF_6 production facilities require high levels of supporting and operating technology, plus relatively expensive raw materials (H_2, HF, and F_2). Since the technology and raw materials are not generally available at remote mill sites, UF_6 production facilities are not located near the mills. The Allied Chemical plant[15] has a capacity of about 13,000 MT of uranium per year; Kerr-McGee is licensed to expand its capacity from 5000 to 10,000 MT per year.[16] By comparison, the annual yellow cake production by domestic mills has been ∿10,000 to 11,000 MT of uranium for the period 1968-76.[17] The domestic commercial UF_6 plants also provide conversion services to foreign countries. The DOE facilities primarily process special materials and uranium scrap from DOE programs.

4.2 Composition and Amount of Radioactive Material Processed by the Model UF_6 Production Plant

4.2.1 Feed to the model UF_6 production plant

The model UF_6 plant processes 10,000 MT of natural uranium per year in the form of ore concentrate (yellow cake) produced by domestic uranium mills. The feed to the model UF_6 plant is assumed to be a composite of 85% acid-leached and 15% alkaline- (carbonate-) leached yellow cake, which has aged at least 6 months in sealed drums after milling. Impurities other than radionuclides, ammonium ion, sodium ion, and magnesium ion are based on the average feeds to the Allied Chemical UF_6 plant, the Kerr-McGee UF_6 plant, and the DOE-Fernald refinery. The major chemical and radionuclide constituents for Cases 1 and 2 are listed in Table 4.2; the assumptions are

given in Table 4.3. There may be other chemical constituents in addition to those listed since UF_6 plants only analyze for the impurities that may cause difficulties in the process. The model does not consider radionuclides introduced as impurities in the chemical or water feed to the plant.

Radioactive materials. The radionuclides of primary concern are $U_{(nat)}$,* ^{226}Ra, ^{230}Th, ^{234}Th, ^{234m}Pa, and ^{222}Rn. The daughter products of radon are not listed individually as source terms either because they have half-lives of less than 2 hr and do not accumulate in the bioenvironment (^{218}Po, ^{214}Pb, ^{214}Bi, and ^{214}Po) or because they individually contribute less than 0.02% of the total relative hazard (^{210}Pb, ^{210}Bi, ^{210}Po). However, the daughter products are included when the dose from radon is calculated. The relative hazard is estimated by dividing the number of curies present by the Radiation Concentration Guide value for that nuclide (presented in 10 CFR 20, Appendix B, Table II, Column 1, soluble nuclide).

Two levels of ^{230}Th and ^{226}Ra are considered -- a "low-impurity" feed containing 2800 pCi of ^{230}Th and 200 pCi of ^{226}Ra per gram of U_{nat}, and a "high-impurity" feed containing 14,200 pCi of ^{230}Th and 1600 pCi of ^{226}Ra per gram of U_{nat}. Recent data indicate that "low" levels are the most probable concentrations that will occur.[18]

The "low-impurity" feed model uses the higher value of either the weighted average feed to the Allied Chemical UF_6 plant in 1976 or the calculated composite of the domestic milling industry derived from the Allied data.[18] The ^{230}Th content of 2800 pCi per gram of U_{nat} is based on the weighted-average feed to the Allied plant in 1976. This feed included

---

*The "old" (prior to July 10, 1974) definition of a curie of natural uranium (U_{nat}) is used throughout this report to be consistent with the earlier report in this series on uranium mills.[2] One curie of U_{nat} is the sum of 3.7×10^{10} dis/sec from ^{238}U, 3.7×10^{10} dis/sec from ^{234}U, and 9×10^{8} dis/sec from ^{235}U; it is also equivalent to 3000 kg of natural uranium. Under this definition, 1 kg of U_{nat} is equivalent to 333.3 μCi of U_{nat}, or the sum of 333.3 μCi of ^{238}U, 333.3 μCi of ^{234}U, and 8.1 μCi of ^{235}U. Under the current (July 10, 1974) definition, 1 kg of U_{nat} is equivalent to 677 μCi of U_{nat}, or the sum of 330.9 μCi of ^{238}U, 330.9 μCi of ^{234}U, and 15.4 μCi of ^{235}U. In calculating source terms there is about a 1% difference between the "old" and the "new" curie, except for ^{235}U, which is only a minor contributor to the dose (Sect. 7.0).

concentrates from the Elliot Lake district in Canada, which contained more thorium than domestic concentrates.* The ^{226}Ra content of 200 pCi per gram of U_{nat} is based on the calculated composite product of the domestic milling industry. This is slightly higher than the weighted average of 172 pCi per gram of U_{nat} for the Allied feed.** A more-detailed discussion of the "low" impurity feed is presented in the Appendix to Part I.[1] The trend of the future is probably in the direction of lower ^{230}Th and ^{226}Ra contents as new amine solvent extraction mills, which yield a radiologically purer product, come on-stream and old ion exchange mills are decommissioned (see Table A-1, Part I, p. 278, for analyses of the different types of yellow cake).[1] However, there is a large stockpile of yellow cake to be processed, and UF_6 plant feeds for the near future are expected to be similar to the "low-impurity" feed.

The high-impurity feed is presented for comparative purposes. It is the composite product of the "model" uranium mills described in a previous report.[2] The information was nearly 20 years old (1960-62)[19,20] and based on obsolete mill circuits and questionable analytical procedures, yet it contained the only data available during 1976 and early 1977 when Sects. 4-8 of Part I of this study were prepared.[1] It seems unlikely that a UF_6 plant would process the "high-impurity" feed. However, levels above the "low-impurity" feed are possible in processing yellow cake from ion exchange or conventional carbonate leach mill circuits unless these feeds are blended with yellow cake from solvent extraction mills (see Part I, Tables A-1 and A-3).[1]

This study does not address the conversion of recycle material from fuel reprocessing plants to UF_6 (see ORNL/NUREG/TM-37).*** The model plant

*The composite product of the domestic milling industry in 1976 is estimated to contain ∿2000 pCi of ^{230}Th per gram of U_{nat}.

**There may be a tendency for the F-F plant to process less than the industry's average of concentrates from the conventional alkaline (carbonate) leach circuit, which contain higher-than-average concentrations of ^{226}Ra and sodium. This is because the F-F process charges a penalty for removing sodium from feed materials, while the SX-F process does not.

***J. W. Roddy, R. E. Blanco, B. C. Finney, G. S. Hill, R. E. Moore, and J. P. Witherspoon, Correlation of Radioactive Waste Treatment Costs and the Environmental Impact of Waste Effluents in the Nuclear Fuel Cycle — Conversion of Recycle Uranium to UF_6, ORNL/NUREG/TM-37 (August 1977).

is not designed to handle enriched uranium. In addition, the product of a fuel reprocessing plant is already highly purified chemically; thus there is no need for the purification steps, which are a major source of radioactive effluents at a yellow cake conversion plant.

Chemical composition. In Cases 1 and 2, a simplified feed consisting of a mixture of $(NH_4)_2U_2O_7$, and $Na_2U_2O_7$ is used to illustrate the waste treatment methods. Uranium hexafluoride plants also process some U_3O_8 and MgU_2O_7. For the most part, their behavior is similar to that of the model feed. When U_3O_8 is processed, NO_x is produced during the dissolution in nitric acid and a slightly higher amount of uranium is lost as insoluble material (Sect. 4.4.5.1). If MgU_2O_7 were processed by the model SX-F plant, more acid would be consumed during dissolution (Sect. 4.4.5.1). This would increase the nitrate load to the waste treatment system, and the volume of solid waste would be greater in Cases 3 and 4 because of the magnesium salt. Chemical impurities are based on the average feeds to the Allied Chemical UF_6 plant, the Kerr-McGee UF_6 plant, and the DOE-Fernald refinery.

Sodium ions are excluded from the feed in Case 4 because they cause difficulties in the advanced waste treatment system (Sect. 4.4.11.7). It is simpler to change the mill processes to eliminate sodium from the yellow cake (e.g., by precipitating UO_4 with peroxide) than to design the advanced waste treatment system to handle it at the UF_6 plant. There is no change in the amount of radioactive materials handled in Case 4. The restriction of sodium ions is suggested as a possible option in Case 3[1] to reduce the release of sodium salts in the effluent (Sect. 4.4.11.6); however, it is not essential to the performance of the waste treatment system. In Case 4, the sodium must be excluded.

4.2.2 Growth and decay of radionuclides within the model UF_6 production plant

In the estimation of source terms for a facility processing radioactive materials, one can often ignore the quantity of nuclides being formed from precursors or decaying within the plant. This is possible (1) because the majority of the nuclides either have a long half-life (i.e., ^{238}U, ^{230}Th, ^{226}Ra, and ^{210}Pb), so that the amount of nuclide produced or decaying while

the material is being processed is negligible; or (2) because the mixture has essentially reached secular equilibrium where the rate of formation of the nuclide is equal to the rate of decay so that the quantity of the nuclide is constant. However, if a short-lived nuclide such as ^{234}Th or ^{222}Rn is separated from a long-lived parent during processing, the production or decay of the nuclide in different fractions may appreciably affect the source terms.

Thorium-234 (half-life, 24 days) is chemically separated from ^{238}U during processing. Holdup of thorium- or uranium-rich streams within the plant area (e.g., storing the fluorination ash before scrap recovery or holding liquid effluents in settling basins prior to release) affects the source terms. Protactinium-234m has a half-life of only 1.18 min and is in secular equilibrium with ^{234}Th at all times. The next members of the series, ^{230}Th and ^{226}Ra, have long half-lives — 83,000 years and 1620 years respectively; thus their production and decay during processing may be ignored. Radon-222 (half-life, 3.8 days) is a gas and may be removed from its nonvolatile ^{226}Ra precursor by the air sparges used in dry materials handling. If wastes containing ^{226}Ra are impounded near the plant (Cases 1 and 2), radon may diffuse from the accumulated waste in a manner similar to the radon emanation from uranium mill tailings. The short-lived radon daughters are included with radon in the dose calculations, but are not listed individually as source terms (Sect. 7.0). Radon and short-lived radon daughters are assumed to be in secular equilibrium with ^{226}Ra in all particulates released. The decay of radon gas as it is dispersed in the environment is discussed in Sect. 7.0. Lead-210 has a 22-year half-life and is not present in significant amounts in the UF_6 plant; however, on a long-term basis, ^{210}Pb and its daughters will grow into the stored waste.

4.2.3 Movement of radioactive materials within the model UF_6 production plant

Operational information about the movement of radioactive materials throughout a SX-F plant is limited. Overall uranium recoveries are high, but quantitative data on the compositions of waste streams are not available. Therefore, airborne uranium releases are estimated primarily by analogy to

similar operations at an F-F plant (Part I) or at a uranium mill.[1,2] Case 2 airborne releases are based primarily on stack sampling data obtained through the courtesy of the Allied Chemical Corporation, which uses the F-F process, and represent a 1-year summary of individual stacks adjusted to the average annual uranium release for the period 1969-74. The uranium content of the solvent extraction raffinate is based on the Fernald refinery flowsheet.[21] This value should probably be regarded as an upper limit under normal operating conditions.

The radioactive impurities in the yellow cake feed other than radon (which is a gas) accompany the uranium as far as solvent extraction. No data are available on the amounts of thorium and radium which cross with the uranium during solvent extraction. In general, tributyl phosphate (TBP) is selective in extracting uranium while rejecting impurities to the raffinate. This study assumes that 0.5% of the ^{226}Ra crosses with the uranium during solvent extraction. This is by analogy to calcium, which is chemically similar and sometimes serves as a carrier for radium. Typically, purified uranyl nitrate solution contains less than 10 ppm calcium compared with an average in the feed of 0.18%;[22] that is, <0.56% of the calcium crosses with the uranium. Thorium is different, however. Under some conditions it may be readily extracted and TBP is also used for thorium purification.[23] Good chemical separations of uranium and thorium can be obtained by operating at high salting agent concentrations or by adding complexing agents such as phosphate. The uranium refinery does not normally take special precautions for thorium since domestic yellow cakes do not contain chemically significant levels of natural thorium. This study assumes that no complexing agent is added to the primary dissolver and that the model plant operates under conditions where 50% of the ^{234}Th and ^{230}Th is extracted with the uranium.

The radioactive materials that cross with the uranium during solvent extraction are expected to accompany the uranium through the conversion process as far as fluorination, where the UF_6 volatilizes and some unburned UF_4 falls to the bottom of the tower (tower ash), while most of the radioactive impurities along with a little unburned UF_4 are collected by the filters. In estimating source terms for the conversion of purified UO_3 to

UF_6, the growth of ^{234}Th (half-life, 24 days) is ignored, ^{234m}Pa (half-life, 1 min) is assumed to be in secular equilibrium with ^{234}Th at all times, the tower ash is assumed to have the same composition as the tower feed, while essentially all the radioactive impurities are in the filter fines. The filter fines are stored for at least 6 months to permit the decay of the ^{234}Th and associated ^{234m}Pa before recycling to the miscellaneous digestor. The fluoride in the scrap is expected to complex most of the long-lived ^{230}Th, so that it does not extract with the recycle uranium. Ultimately essentially all the ^{230}Th and ^{226}Ra are rejected to the solvent extraction raffinate. As generated, the raffinate also contains about half the ^{234}Th and ^{234m}Pa present in the feed. Source terms for an actual plant might differ from the model, depending on the operating conditions.

4.3 Waste Management Methods

A general description of the waste treatment methods follows. Details of the specific applications are given in Sect. 4.4. In some case studies, it is simpler technically to change the process or plant feed to avoid or reduce the formation of a waste rather than to treat the waste.

4.3.1 Airborne radwaste-chemwaste treatment methods

4.3.1.1 Dry dust collectors. Filters are the principal means by which uranium particulates are recovered from off-gas streams; however, the wet scrubbers used to remove noxious gases also collect some particulates (Sect. 4.3.1.2).

Pulse-jet bag filters.[24-27] The bag filter is quite efficient for removing dusts as fine as 1 μ from cool, dry streams. Dusty gas is cleaned as it flows through a filter made of compressed felt and deposits particles in the voids. As the voids fill, a cake builds up on the fabric surface and the pressure drop increases to a point where the deposited dust must be removed by a reverse jet of air from the "clean" side. Cleaning may be effected either by pulsing a jet of compressed air through valves controlled by a timer or by employing a reverse jet through a blow ring which moves continuously up and down the bags. Very high dust concentrations can be handled because the maximum period between cleaning cycles is only a few

seconds. High dust concentrations are usually an advantage since the deposited dust tends to be dislodged in "slabs" rather than being re-dispersed in the gas phase. The pulse-jet type has proved to be reliable in UF_6 plants, displaying a long bag life and requiring relatively little maintenance[28-30] in contrast to the mechanical problems associated with the blow-ring mechanism.[28] All UF_6 plants use bag filters to recover uranium dusts from materials handling operations. Primary bag filters are designed to automatically return material to the process; dust from secondary bag filters is collected in drums and manually recycled.

Long-term plant and laboratory investigations by Stairmand have shown that the reverse-jet bag filter is 99.9% efficient under typical industrial conditions.[24,25] Losses are primarily from leaks around seals or holes in the bag. Under optimum conditions (i.e., no leaks), the average efficiency of the blow ring-type of bag filters at one uranium refinery was 99.986%.[27] Efficiencies remain close to 100% for ≥1-μ particles.

In this study, the primary bag filter is assumed to have an efficiency of 99.9% and the primary-plus-secondary-bag filter system an efficiency of 99.986%. The second unit, which receives any dust that has leaked through the first unit, ordinarily collects relatively little material.

Sintered-metal filters. Porous metal filters with up to 50% of their volume interconnecting voids or pores are made by sintering prealloyed metal powders of selected particle sizes in a controlled-atmosphere furnace. The powdered metal particles fuse at their points of contact, resulting in a bond with a homogeneous crystalline structure. Because dust particles may impinge on surfaces as the gas passes through the filter, the removal rating is higher than the mean pore size. For example, a 1/8-in.-thick filter with a mean pore size of 10 μ will remove 98% of the 0.7-μ-diam particles.[31]

Uranium hexafluoride plants use sintered stainless steel filters with a nominal pore size of 10 μ on the reduction off-gas, and either Monel or nickel 10-μ sintered metal filters on the fluorination off-gas to recover uranium. Primary filters are equipped with automatic blowback devices that return material directly to the process. Secondary filters, which serve as a receiver of particles that leak through the primary filters,

ordinarily collect little material. Parallel trains of filters are installed, so that one train can be used while the other is being cleaned. The quantity of uranium passing the reduction filters is estimated from data provided by the industry on scrubber liquors and the stack effluent downstream from the metal filters. Particulates passing the fluorination filters are estimated from the reduction data. The average particle size of material passing the filters is assumed to be 2 μ when estimating efficiencies of downstream wet scrubbers (Sect. 4.3.1.3).

Porous carbon filters. Uranium hexafluoride plants use porous carbon filters on the hydrofluorination off-gas to recover uranium. These are very efficient filters; for example, a 3/4-in.-thick filter is 99.9995% efficient on uranium refinery dusts.[32] The carbon filter system is arranged similarly to the sintered-metal filters, that is, in parallel trains with one train in use while the other is being cleaned. Automatic blowback devices recycle the material collected on the primary filters to the process. The secondary filters collect particles which leak through the primary filters and ordinarily collect little material. In this assessment, the amount of material passing the filter system was estimated from data on downstream scrub liquors and condensed off-gases provided by the industry.

Vacuum cleaner bag. The plant vacuum cleaner system contains a bag (and possibly also a cyclone) for collecting coarse dust and debris. This system has a low efficiency on <10-μ particles, and the air must be cleaned further with a high-efficiency pulse-jet bag filter.

HEPA filters.[33,34] High Efficiency Particulate Air (HEPA) filters have been used for many years in the nuclear industry to effectively remove radioactive particulates from air streams. A modular HEPA filter has a 2- by 2-ft cross section, a depth of 1 ft, and a capacity of about 1000 cfm. The modules are formed into banks to achieve the required capacity for filtering air. The filter medium is a pleated mat of woven fiberglass. By definition, a HEPA filter is an expendable (single-use) extended-medium, dry filter having (1) a minimum particle removal efficiency of no less than 99.97% for 0.3-μ particles; (2) a resistance of 1.0 in. H_2O when clean, and a resistance of up to 6 to 10 in. H_2O when in service and operated at the rated air flow capacity; and (3) a rigid casing extending the full depth

of the medium.[33] Based on experimental data and known characteristics of filter systems, it is assumed that the efficiency of the system is 99.95% (tested with 0.3-μ smoke).[33]

The following considerations apply to the design and operation of HEPA installations:

1. A high efficiency for the filters can be ensured by installing them in such a manner that all of the gas to be treated passes through the filters. The filters should be tested, before and after installation and also periodically while in service, by a method such as the dioctyl phthalate (DOP) smoke test. Continuous pressure drop measurements can indicate whether the filters are plugging or have been ruptured.

2. HEPA filters are strictly backup units and must be preceded by high-efficiency dust collectors. If one assumes an average particulate capacity of 4 lb/unit, then HEPA filters on the drum dumping off-gas, for example, would need to be replaced every 3 months when a primary bag filter is used, compared with replacement every 2 years for a primary-secondary-bag-filter combination.

3. Excessive moisture can impair the efficiency of the filter. It is mandatory to remove all entrained moisture or to heat the air to above the dew point.

4. Fires can seriously damage a filter as the result of overheating the fiber mat or burning the wooden frame.

5. The type of operating data that can be extrapolated for design purposes is limited.[34]

<u>HF-resistant HEPA filters</u>.[35,36] HF-resistant HEPA filters, now under development, are expected to become commercially available. Experimental filter assemblies having a resistance of ∿1.3 in. H_2O and an efficiency of ∿99.9% have been fabricated.[35] These filters have been tested at the Rocky Flats Division of Dow Chemical Company in a stream containing an estimated 40 to 100 μg of HF per liter as well as nitric acid and plutonium.[36] In the present study, we have assumed that the objective of a

99.95% efficient HEPA filter which is resistant to a HF concentration of 40 μg/liter will be achieved.* The HEPA filters are assumed to be preceded by condensers and KOH scrubbing systems to lower the HF concentration in the gas stream to ≤40 μg/liter.

4.3.1.2 Wet scrubbers for absorbing noxious gases. Both physical and chemical processes are involved in the wet scrubbing of gases.[37] Physical processes include gas-liquid contact, diffusion in the gas phase, diffusion in the liquid phase, and mist removal from the effluent gas stream. Chemical absorption may be an equilibrium reaction, such as the absorption of HF in water where the vapor pressure of HF above the solution limits the efficiency of the scrubber, or it may be an irreversible reaction, such as the neutralization of HF in a KOH scrubber where physical processes limit the scrubber efficiency. The heat of reaction from the chemical absorption must be considered in the scrubber design since it may affect the efficiency if the vapor pressure of the gas in equilibrium with the scrubber solution increases as a function of temperature. The design of the scrubber must also consider that the gas feed may be hot and/or contain water vapor which will condense in the scrubber. Scrubber tests with HCl - a reactive gas - and water are a good measure of the physical efficiency of the equipment and may be used to estimate efficiencies for other reactive systems (i.e., scrubbing HF with KOH). Efficiencies for less reactive systems such as HF and water must be measured experimentally.

Scrubbing solutions and efficiencies are given in Table 4.4. Either water or caustic solution may be used to scrub HF, although caustic is more effective. Water scrubbing of F_2 is not practiced because of the potential explosion hazard.[38] A caustic solution is effective; however, the concentration should be maintained above 2% KOH (or equivalent) to prevent the formation of poisonous OF_2.[15] Water or dilute acid may be used to scrub HNO_3 vapor. Simple water scrubbing systems are ineffective on the NO_x gases that are also present in the SX-F plant off-gas. The NO_x

*Streams bearing HF, which would require HF-resistant HEPAs, carry such a small fraction of the total radioactive dusts that the difference between 99.9 and 99.95% efficiency has a negligible effect on the overall assessment.

absorption tower is discussed separately in Sect. 4.3.1.4. In the case studies, all KOH scrubbers are recirculating systems which operate within the range 10 to 2 wt % KOH. Water scrubbers may be either single-pass liquid flow (early cases) or recirculating systems to minimize liquid effluents.

Although the primary purpose of the wet scrubbers in a UF_6 plant is to absorb noxious gases, they will simultaneously collect small quantities of particulates (Sect. 4.3.1.3).

Baffle (orifice, self-induced spray deduster).[24-26] Air flows through a stationary baffle at high velocity, carrying the water in a heavy turbulent sheet. The centrifugal force exerted by rapid changes in direction of flow causes the dust particles to penetrate the water film. The mechanical action of the gas flow moving the water creates a spray which serves to scrub the gas. This device is quite simple, with no moving parts in contact with the liquid, and is readily constructed of corrosion-resistant materials. Baffle scrubbers are especially suitable under corrosive conditions or in cases where airflows may fluctuate over a wide range. Ordinarily the baffle is thought of as a dust collector; however, in the SX-F case studies, the baffle together with a vertical fin tube cooler collect, as nitric acid, 60% of the nitrate values in the off-gas from the denitrator. The separate condenser is necessary since there is no provision for cooling coils in the baffle scrubber. This system has the advantage of recovering 40 wt % nitric acid suitable for direct recycle to the process. The corrosion problems associated with the recovery of this product in scrubbers with mechanical recirculating systems or in gas absorption towers are severe because the acid is contaminated with chloride.

Wetted packed tower.[26,39] Wetted packing provides an impingement surface for good absorption of gases and prevents reentrainment of dusts. The packing may be fixed, or it may consist of a floating bed of low-density spheres. Gases to be removed must be below 1% by volume. Dust collection is secondary to direct-contact cooling and gas absorption. The usual countercurrent packed tower has almost no solids-handling capacity since solids tend to plug the packing and support plates, which can be cleaned only by removal. Crossflow scrubbers can handle dust loadings up to 5 gr/ft^3 by washing the face of the packing with spray nozzles in parallel

flow while the body of the packing is irrigated from the top. Advantages are low cost, simplicity, corrosion resistance, and no moving parts. The KOH packed tower has an efficiency of 99% for UF_6,[15] and is assumed to have an efficiency of 99% for HF and F_2 by analogy to UF_6[15] and HCl.[39]

Venturi scrubber.[26,40] Liquid is introduced into the throat section and atomized by the high-velocity gas stream. The high relative velocity between the accelerating solid particle and the liquid droplet makes for high efficiency by impingement. Gases are removed by absorption or chemical reaction with the contacting liquid. The venturi must be followed by a mist eliminator. Venturi scrubbing systems are capable of efficiently scrubbing a multiple-constituent fume containing vapors, aerosols, and particulates. The ejector venturi scrubber utilizes the velocity of the liquid as a pump so that there are no mechanical parts in contact with the gas stream - an advantage in handling corrosive gases.[40] Water containing up to 10% solids can be recirculated.[41] The efficiency depends on the pressure drop. High efficiencies require a high power input. The medium-energy and high-energy water venturies have HF efficiencies of about 90[15] and 95% respectively.[40] The HF removal efficiency for the high-energy KOH venturi is assumed to be 99% by analogy to HCl and Cl_2.[40]

KOH coke box. The use of a KOH coke box as a tertiary scrubber to absorb the final traces of HF, UF_6, and F_2 from a gas stream is a proprietary development of the Allied Chemical Corporation.[15] Presumably, it has some features in common with a packed tower; in addition, the carbon may enter into the reactions either as a catalyst or by sorbing the reactive gases. Since this is a generic study, the proprietary efficiency is downgraded to 90% because the fully developed technology is not in the public domain. Proprietary technology is avoided if possible in generic studies, but the coke box is the only presently developed system and appears to have technical advantages over the only known alternative which might be developed.*

*Wet mineral wool filters will remove 90 to 95% of the HF from a gas stream containing 250 to 600 ppm of HF by reaction of the HF with SiO_2 to form SiF_4, which then hydrolyzes to silicic acids.[42] The filters, which are similar to HEPA filters, are consumed during service. Although these filters could probably be used in place of the coke box, the development problems associated with recovering the uranium from the silicic acid mixture, possible plugging of the filters with solids, and the expense and additional solid waste generated by frequent filter changes provide an incentive to develop the coke box rather than the mineralite wool filters.

Lime scrubber.[43] A gas-liquid dispersion scrubber with $Ca(OH)_2$ as the scrubbing medium is used on the off-gas from the miscellaneous digestor in Case 4. The purpose is to prevent HF from entering the NO_x absorber and, at the same time, to avoid introducing alkali-metal ions, which create difficulties in the waste treatment system (Sect. 4.4.11.7). Fluoride removal efficiencies of 99% have been reported in small-scale laboratory tests. Engineering development would be required before the method is ready for industrial use.

4.3.1.3 Wet scrubbers for collecting particulates.[24-26] The principal mechanism involved in the wet collection of particulate matter is impingement of individual particles upon scrubbing liquid droplets. As the flowing gas approaches an individual droplet, it diverges to avoid the obstacle; however, the inertia of heavier entrained particles keeps them moving in a nearly straight path, forcing them to collide with the droplets. The droplets, being substantially larger and more massive, collect the particulates and then fall due to gravity. The wet scrubber recovers the dust as a slurry. In general, the efficiencies are directly proportional to the pressure drop and decrease with decreasing particle size (Table 4.5). The systems were previously described in Sect. 4.3.1.2. A wet-baffle (orifice) scrubber is used as primary treatment on the denitrator off-gas, and in Case 3 on the building ventilation effluent. Some dust also passes the sintered-metal or carbon filters on the process and is collected in the noxious gas scrubbers (Sect. 4.3.1.2). Venturi scrubbers are effective on particles as small as 1 μ, but the dust collecting efficiencies of the other wet scrubbers decrease rapidly as the particle size of the dust drops below 5 μ (Table 4.5). For example, a packed tower which is 95% efficient on a 5-μ dust is only 58% efficient on a 1-μ dust. Therefore, it is important to consider the particle size in estimating efficiencies of multiple filters and scrubbers in a series. For purposes of this assessment, it is assumed that the average particle size of the dust passing the 10-μ sintered-metal filters is 2 μ.[31] The grade efficiency curves of Stairmand were used in estimating the particle size of material passing the wet scrubbers.[24,44,*] The efficiencies estimated for multiple scrubbers in series are given in Table 4.8.

*The graphs in refs. 44 and 24 are the same, but ref. 44 is easier to read than ref. 24.

4.3.1.4 NO_x absorption tower.[45] Nitric acid is a valuable commodity which is recovered from NO_x off-gases for recycle to the SX-F process with an NO_x absorption tower. The reversible equilibrium reactions are:

$$2NO + O_2 \rightleftharpoons 2NO_2 \quad (1)$$

$$3NO_2 + H_2O \rightleftharpoons 2HNO_3 + NO \quad (2)$$

$$N_2O_4 + H_2O \rightleftharpoons HNO_3 + HNO_2 \quad (3)$$

$$3HNO_2 \rightleftharpoons HNO_3 + 2NO + H_2O \quad (4)$$

$$HNO_2 \rightleftharpoons H^+ + NO_2^-. \quad (5)$$

Favorable absorption conditions are: (1) high partial pressure of nitrogen oxides, (2) high degree of oxidation of nitrogen oxides, (3) low temperature, and (4) large gas-liquid interface.

Gases from the scrubber-condenser, which still contain NO_x, are passed through an oxidation chamber where NO is converted to NO_2. The NO_2 is further oxidized and absorbed in a 20-plant absorption tower. The NO that is formed as a result of reactions (2) and (4) must be oxidized to NO_2 in the absorption tower so that the spacing is not the same for all trays. Eight bars is the usual working pressure. Cooling coils must be installed on all lower and middle trays, although some of the trays in the tail section may be without cooling. Proper design with regard to cooling and tray spacing is critical to achieving optimum efficiency. In continuous operation with a uniform gas feed, the absorption tower can recover 95% of the NO_x.[46]

Precautions must be taken to avoid the buildup of chloride and fluoride, which are highly corrosive in the absorption tower.[47-49] In SX-F Cases 1-3, part of the chloride crosses with the uranyl nitrate during solvent extraction and is volatilized with the NO_x during denitration. This chloride is controlled by withdrawing 30 wt % nitric acid from the tower, even though this composition is lower than desired for recycle, because most of the

chloride is removed from the tower with the 30% acid.[22] In Cases 1-3, the chloride is eventually rejected to the raffinate waste. An ozone sparge is used to remove the chloride in SX-F Case 4, which recovers nitric acid from the raffinate waste. The chloride is oxidized to chlorine according to:

$$2H^+ + 2Cl^- + O_3 \longrightarrow Cl_2 + H_2O + O_2,$$

and the chlorine is then removed with the ozone-air sparge mixture. The ozone sparge was used successfully at the Fernald refinery in the 1950s,[47] and has been tested recently at the DOE Y-12 Plant.[50] Fluoride is prevented from entering the NO_x absorber through the use of caustic scrubbers or precipitation as CaF_2.

4.3.1.5 HF condensers. HF condensers improve the HF efficiency of the plant, reduce the load to the HF off-gas scrubbers, reduce the load to the liquid fluoride treatment system, and decrease the amount of CaF_2 solid waste generated. The amount of HF removed by the condensers depends on the temperature of the coolant.

Aqueous HF condensers. The hydrofluorination off-gas is a mixture of water vapor (from the reaction) and excess HF. Condensation of the model SX-F plant off-gas yields a 25 wt % aqueous HF solution, which is low in radioactive materials and suitable for industrial use.[22,*] The base SX-F model plant (i.e., Case 1) includes a water-cooled condenser with an aqueous HF efficiency of 90%.[51] Case 4 has both a water-cooled condenser and a brine-cooled condenser with an HF efficiency for the system of 99%.[51]

Anhydrous HF condensers. As generated, fluorine is contaminated with ∿11 vol % HF and the hydrogen off-gas from the fluorine cell contains ∿9 vol % HF.[52] The base plant (i.e., Case 1) has inefficient brine-cooled condensers which decrease the HF contents of the fluorine and the hydrogen off-gas to 8 (ref. 13) and 6.5 vol % respectively. (Recovered HF is returned

---

*In the F-F process (Part I), impurities such as silicon, boron, vanadium, molybdenum, and sulfur may volatilize during hydrofluorination.[53] Because of the chemical impurities that are condensed, F-F plant hydrofluoric acid is of limited value and is therefore not recovered in F-F Cases 1-3.

to the process.) In Case 4, the brine-cooled condensers are replaced by -120°F condensers which reduce the HF contents of the fluorine and the hydrogen to 4 and 3 vol % respectively.[52] A lower limit of 2% HF is fixed by the polymerization properties of HF. Although the DOE flowsheet for Case 4 has been described in general terms in the open literature,[52] the technology is still classified. Case 4 assumes that, at some future date, either private industry can develop this technology or the DOE technology will be made available to industry.

4.3.1.6 Hydrogen burner. In all case studies, a hydrogen burner is used on the reduction off-gas to convert the H_2S to SO_2 and to react the excess hydrogen with oxygen to form water.

4.3.1.7 Process changes. In addition to treatment methods applied directly to the off-gas, the case studies include several process changes that reduce the load to the waste treatment systems and thus decrease the quantity of chemwaste released. These process changes are:

1. more efficient condensers on the fluorine cells (reduce HF release, Sects. 4.4.8.7 and 4.4.9.1);
2. a more efficient fluorine cleanup reactor (reduces HF releases, Sect. 4.4.8.5);
3. a UF_6 cleanup reactor (reduces HF releases, Sect. 4.4.8.5).

4.3.2 Liquid radwaste-chemwaste treatment methods

Liquid treatment methods ranging from simple settling ponds to complex recycle systems are included in the case studies. Waste streams vary widely in composition but usually have high concentrations of chemicals and low uranium contents. Consequently, the major objectives involve reducing the amounts of chemicals and uranium daughters (especially ^{226}Ra) released. A general description of the waste treatment methods follows, with details of the specific applications being deferred to Sect. 4.4. In some case studies, it is simpler technically to change the process or the plant feed rather than to treat the waste.

4.3.2.1 Holding and settling before release. A basin is a simple, yet effective, method of clarifying liquid wastes before release. It allows time for complete precipitation to be achieved (i.e., time to approach the equilibrium solubility of slightly soluble compounds), coalescence of colloidal particles, and gravity settling of solid particles, so that relatively clear supernate is released. The basin may also serve as the storage repository for solids generated by the liquid waste treatment systems and as an equalization system where streams are diluted with other plant wastes. The basin is lined with an impervious, synthetic material to minimize seepage of radioactive materials and chemicals.

The criteria for the construction of an acceptable liquid radioactive waste storage facility at a UF_6 plant are given in Regulatory Guide 3.13,[54] which enumerates minimum requirements with regard to site, design of the embankment retention system, lining, stabilization of embankments and any loose radioactive material produced by evaporation, protection from water runoff from surrounding drainage areas, fencing, seepage assessment, maintenance, and stabilization when operations are terminated. Additional information about the design of the embankment system, including stability analysis and minimum factors of safety, is contained in the Corps of Engineers Manual EM-110-1-1902.[55]

4.3.2.2 Holding and decay before release. In Case 1, holding the SX raffinate permits decay of the relatively short-lived ^{234}Th and ^{234m}Pa to permissible levels of release (Sect. 4.4.11.4). (Note that, for all liquid wastes other than the raffinate, ^{234}Th and ^{234m}Pa will grow toward secular equilibrium with ^{238}U during holdup.)

4.3.2.3 Impoundment with evaporation. In Case 2, nitrate-bearing raffinate waste is neutralized with NH_3 and impounded in lined basins (lagoons). A combination of solar evaporation and waste heat from the condenser on the denitrator off-gas is used to dispose of surplus water and concentrate the ammonium nitrate solution. It is not feasible to crystallize solid ammonium nitrate in natural evaporation ponds because it has a very high solubility in water (540 g per 1000 g of saturated solution at 0°C)[56] and the solid is hygroscopic.*

*When ammonium nitrate is to be used as a solid fertilizer, the particles are coated with substances such as kaolin or diatomaceous earth.[58]

Neutralization is necessary to make the waste chemically compatible with the liner. Neutralization also precipitates radioactive materials, thereby reducing the potential for accidental discharges of radioactive materials from the pond. Soluble nitrate waste bearing soluble radioactive materials concentrates in the retention basin along with the neutralization sludges. Although impoundment is not a permanent solution to the problem of nitrate wastes, it is the only fully developed and immediately available alternative to releasing nitrate wastes. Criteria for the retention system are described in Regulatory Guide 3.13.[54]

At the midwestern site where the net annual evaporation rate is low, the pond water is heated by using it to cool the condenser on the denitrator off-gas.[57] Raising the temperature increases the rate of evaporation from the pond, thereby reducing the area required for evaporation. The system is enclosed and does not add airborne effluents. The waste heat evaporator is not used at the New Mexico model site, where the climate is arid.

4.3.2.4 Precipitation of chemicals and radioactive materials. Some of the noxious chemicals and most of the radioactive materials in the liquid wastes can be precipitated by the addition of suitable chemicals. After clarification, some of the streams can be recycled to the process, others are released, and a few require additional treatment to remove soluble chemicals. Conventional items of equipment (e.g., mixer-settlers, feed tanks, etc.) are used in the cost estimates.

Neutralization for heavy metals.[59] Neutralization of acidic effluents will precipitate most of the heavy-metal ions, including uranium and thorium as well as aluminum, iron, cadmium, copper, zinc, and nickel. In addition, lime neutralization will precipitate insoluble calcium salts of fluoride, sulfate, molybdate, phosphate, and vanadate. The process effluent at the Fernald refinery contains 0.5 to 3 ppm uranium after lime neutralization and settling.[60] Isotopic analyses for ^{234}Th and ^{230}Th are not available.

This study assumes that neutralization followed by settling (Cases 1 and 2) or centrifuging (Cases 3 and 4) will reduce the uranium content of solvent extraction wastewater to 3 ppm (1×10^{-6} μCi of ^{238}U plus 1×10^{-6} μCi of ^{234}U per ml). For the flows assumed in the model, this is ∿95%

uranium removal by waste treatment. The thorium removal is arbitrarily assumed to be 99.9%, which is probably conservative for thorium (i.e., the estimated release is high). The ^{230}Th content of the treated solvent extraction waste "low-impurity" feed option in Case 1 is 530 x 10^{-9} μCi of ^{230}Th per ml compared with 1 x 10^{-9} μCi of ^{230}Th per ml for neutralized waste from acid leach uranium mills.[61]

Radium, an alkaline-earth ion, is not expected to form insoluble hydroxides or oxides. Its removal during neutralization is discussed separately.

Barium carbonate treatment and neutralization for radium control. Barium carbonate will remove radium from sulfate-containing refinery wastes by co-precipitating $(Ba,Ra)SO_4$.[21] Operating experience at the Fernald refinery shows that adding 1 kg of $BaCO_3$ per 150 kg of uranium to the dissolver will lower the soluble radium concentration to ∿500 x 10^{-9} μCi/ml. Best results are obtained by adding the $BaCO_3$ to the dissolver, before solvent extraction, rather than treating the raffinate. Lime neutralization of the treated raffinate, along with some dilution with other solvent extraction wastes, further reduces the ^{226}Ra concentration to ∿50 x 10^{-9} μCi/ml. The barium treatment is less effective on refinery wastes, which are principally nitrate with only a small amount of sulfate, than on acid-leach uranium mill wastes where the very large excess of sulfate suppresses the solubility of the $(Ba,Ra)SO_4$. In comparison, barium treatment alone reduces the radium concentration in acid-leach mill waste to 1 x 10^{-9} to 3 x 10^{-9} μCi/ml.[62,63]

The case studies include two levels of radium removal by $BaCO_3$ treatment -- 99 and 99.8% -- with the systems designed on the basis of theoretical principles. Lime neutralization of the barium carbonate-treated raffinate is assumed to remove an additional 90% of the radium by analogy to the Fernald experience. Neutralization serves to reduce the solubility of the $(Ba,Ra)SO_4$, to precipitate $CaSO_4$, which may serve as a carrier for radium, and to precipitate gelatinous $Al(OH)_3$ and $Fe(OH)_3$, which flocculate fine particles.

Ammonia neutralization for radium control. In Case 2 the solvent extraction wastes are neutralized with ammonia and impounded. In the

absence of direct data, the source terms are estimated using the arbitrary assumption that 90% of the radium precipitates. Copperas ($FeSO_4 \cdot 7H_2O$) treatment at 0.2 g/ℓ will precipitate about 75% of the radium in alkaline uranium mill wastes.[64] Since the refinery wastes have iron contents of ∿1.7 g/ℓ, it seems likely that neutralization which precipitates $Fe(OH)_3$ will remove more than 75% of the radium; however, this has not been demonstrated.

Lime treatment for fluoride.[65,66] UF_6 plant off-gas scrubbers generate large volumes of waste scrub liquors which are high in fluoride but low in radioactive materials. Lime is used to precipitate the fluoride as CaF_2 and to neutralize the acid or regenerate the KOH. Water scrub liquors are separated from precipitated solids in a settling basin. Excess calcium (the lime-treated solution is slightly basic with a pH of ∿10) is precipitated as $CaSO_4$ by the addition of H_2SO_4, and the solution is neutralized before release. The clarified effluent from lime treatment generally has a fluoride concentration of 12 to 30 mg/ℓ. The case studies are based on 25 mg/ℓ, assuming 20 mg/ℓ as soluble fluoride[65] and 5 mg/ℓ as suspended solids. Regenerated KOH scrub liquors are filtered and recycled to the process. There is a small liquid bleed of KOH and impurities with the moist filter cake. The off-gas system is designed to avoid water condensation in the KOH scrubbers, so that all regenerated KOH can be recycled. No cost credit is taken for recovered KOH. The CaF_2 that is generated has a low concentration of radioactive materials and is stored on-site in a lined basin or pit. Fluoride treatment systems are in use at all domestic UF_6 production plants.[3,67]

Lime neutralization will also precipitate uranium and thorium as insoluble oxides or hydroxides, and the CaF_2 will probably serve as a carrier for radium in a manner similar to that observed for $CaSO_4$. In addition, the treatment will tend to remove fine particles containing radioactive materials which were collected by the scrubbers. In the absence of direct data for UF_6 plant wastes, it is assumed that 10% of the radioactive materials are released in the liquid effluents from fluoride treatment and 100% are precipitated with the CaF_2. These maximizing assumptions, which are made to avoid underestimating the amount of radioactive materials in either the solid or liquid phase, result in a material balance of 110%.

4.3.2.5 Biological nitrification and denitrification. Nitrification and denitrification processes have long been recognized as part of the natural nitrogen cycle. However, their application to industrial wastewater treatment is a very recent development.

Nitrification is the biological oxidation of ammonium ions (NH_4^+) to nitrate ions (NO_3^-). This process requires two strains of bacteria - Nitrosomonas, which oxidize ammonia to nitrite ions (NO_2^-), and Nitrobacter, which oxidize nitrite to nitrate (NO_3^-). These two bacteria are found together in nature. Both types are autotrophic in that they require inorganic carbon (CO_3^{2-} or HCO_3^-) for synthesis. The overall biochemical reaction using representative yields and oxygen consumption is:[68]

$$NH_4^+ + 1.83\ O_2 + 1.98\ HCO_3^- \longrightarrow$$

$$\underset{\text{(biomass)}}{0.021\ C_5H_7NO_2} + 1.04\ H_2O + 0.98\ NO_3^- + 1.88\ H_2CO_3.$$

This reaction generates acid. If the CO_2 is not removed by air stripping, it may be necessary to add base to maintain the pH within the range where the bacteria can function at a reasonable rate. Trace nutrients are added if they are not already present in the waste (e.g., sewage).[69] Nitrification conditions are described in more detail in Sect. 4.4.11.6, where Case 3 is developed. Biological nitrification has been applied successfully to a variety of inorganic and organic industrial wastes.[70] With inorganic wastes, the ammonia-nitrogen content has been reduced from 500 to 1000 mg/ℓ to <1 mg/ℓ.[70]

Denitrification is an anoxic (absence of oxygen) biological process in which nitrite and nitrate are reduced to nitrogen gas (N_2). Several different types of bacteria commonly found in activated sewage sludge and in soils and streams around the world can cause denitrification. These bacteria are facultative in that they can use either oxygen or nitrate ions in metabolism. An organic carbon source must be supplied. Typically this is methanol for economy, although ethanol and calcium acetate have also been used. According to McCarty et al., the reaction with methanol is as follows:[71]

$$NO_3^- + 1.08\ CH_3OH + 0.24\ H_2CO_3 \rightarrow$$

$$0.056\ \underset{\text{(biomass)}}{C_5H_7O_2N} + 0.47\ N_2 + 1.68\ H_2O + HCO_3^- .$$

The biochemistry of the denitrification reaction is not fully understood.[68] While the pH does rise, in the systems studied to date it has remained within the range where the bacteria can function[72] and the increase has not been as great as predicted by the equation. Trace nutrients are added if they are not already present (e.g., sewage). Denitrification conditions are described in more detail in Sect. 4.4.11.6, where Case 3 is developed. Suspended growth-type denitration systems are in use for industrial wastes at the DOE Y-12 Plant in Oak Ridge and at the DuPont nylon plant in Kingston, Ontario, Canada.[73,74]

Neither nitrification nor denitrification has ever been tested experimentally on uranium refinery wastes. Refinery wastes contain trace quantities of a number of toxic substances which are not encountered in the systems tested to date, and whose effects on the bacteria are not known. In addition, refinery wastes are of variable composition due to variations in the yellow cake feed. Research and engineering development would be required before these methods are ready for industrial use at a UF_6 plant.

4.3.2.6 Thermal denitration. A number of metal nitrates can be thermally decomposed to the oxide by calcination.[75,76] The off-gas will contain NO_x, and sometimes HNO_3 and water, since some metal nitrates are commonly hydrated. The decomposition temperatures vary but generally fall in the range between 350 and 700°C except for the alkali-metal nitrates, which are more stable. Ammonium nitrate decomposes when heated above 200°C.[58] At temperatures between 200 and 260°C nitrous oxide is formed:

$$NH_4NO_3 \longrightarrow N_2O + 2H_2O.$$

At higher temperatures nitrogen, oxygen, and water are the products:

$$2NH_4NO_3 \longrightarrow 2N_2 + 4H_2O + O_2.$$

The decomposition of ammonium nitrate is potentially explosive, particularly in the presence of carbonaceous matter.

The Fernald refinery operated a rotary calciner in the late 1950s to recover nitric acid values from the raffinate.[21,77,78] It was a high-maintenance operation because of the presence of chloride and other corrosive salts, and was later discontinued. More recent tests indicate that the characteristics of the waste have changed, presumably because of modifications in the mill circuits which in turn affected the composition of the refinery feed. With current wastes, only 60 to 80% denitration can be achieved at 650°C.[21] Complete denitration is necessary in order to store the solids. The waste processed in the 1950s obviously contained very little ammonium nitrate since essentially all the nitrate values were recovered.[77,78] Its metal-ion composition is not known. The Fernald system could not handle sodium ions.

Calcination has also been investigated as a means of reducing highly radioactive wastes to solids.[79] A fluidized-bed calciner operated at 400°C has been successfully demonstrated at the Idaho Waste Calcining Facility.[80,81] The wastes were predominantly aluminum and/or zirconium nitrates. Air was used to fluidize the bed, and the NO_x was vented to the atmosphere. Sodium nitrate created difficulties with particle agglomeration because it is relatively low-melting (304°C), yet did not decompose at the calcining temperature.[82-84] Ammonium nitrate was accommodated in the Idaho calciner; however, species tended to recombine in the off-gas, plugging the filters.[81]

Case 4 uses thermal denitration of magnesium nitrate to recover nitrate values in the waste (Sect. 4.4.11.7). The detailed chemistry of the system is not known. Most engineering studies have dealt with the alumina-based system, which may behave differently from the magnesia system. Therefore, research and engineering development would be necessary before this method is ready for industrial use.

4.3.2.7 Ammonia removal by calcining the yellow cake feed. Ammonium diuranate [$(NH_4)_2UO_7$] can be thermally decomposed.[85] Most of the ammonia is driven off by heating to 320 to 370°C, yielding uranium trioxide hydrate as the first product. The uranium trioxide (UO_3) does not begin to decompose until about 400°C; complete conversion to U_3O_8 occurs between 650 and 800°C. In Case 3, part of the yellow cake feed is heated to 370 to 400°C to volatilize ammonia while minimizing the formation of U_3O_8, which is difficult

to dissolve (Sect. 4.4.5.1). This reduces the ammonium load to the waste treatment system. The off-gas carries entrained dust, which is collected by bag filters.

4.3.2.8 Ammonia removal from alkaline wastewater by volatilization. Ammonia can be removed from solutions by making the solution basic (pH of 10.5 to 11.5), to shift the equilibrium

$$NH_4^+ + OH^- \rightleftharpoons NH_4OH \rightleftharpoons NH_3 + H_2O$$

to molecular NH_3, and then using physical processes such as air- or steam-stripping or distillation to volatilize the molecular NH_3.[86] Distillation was selected in Case 4 since the nitrate solutions must be concentrated, in any event, and air-stripping would generate airborne mists which might carry radioactive materials (Sect. 4.4.11.7).

4.3.2.9 Evaporators. Evaporation is commonly used in the chemical industry to concentrate aqueous solutions by boiling off water and volatile chemicals, leaving behind the soluble salts and materials having a lower vapor pressure than water. The separation (decontamination) of radioactive salts depends on the amount of particulates entrained in the vapor and the efficiency of the demisting devices. Care must be taken to avoid too rapid boiling or foaming, which tends to cause entrainment.

A wiped-film evaporator-dryer[87] is used in Case 4 to concentrate neutralized solvent extraction wastes before calcining. This type of evaporator is used extensively in industry to convert aqueous slurries to pastes (e.g., caramel or tomato paste) or to free-flowing powders (e.g., powdered coffee). The material to be concentrated enters the feed section before the thermal wall and is distributed in a thin [about 1-mm (40-mil)] uniform film by the centrifugal action of the rotating blades. The blades impart a high velocity [6 to 10 m/sec (20 to 30 ft/sec)] to the material at the site of maximum heat transfer from the film and accelerate the formation of vapor. Concentrated material exits through the bottom discharge section, while vapors exit through the separating section and out the vapor opening. These features make a wiped-film evaporator suitable for handling viscous material and solutions containing precipitated solids. Alkaline LWR radioactive

wastes containing sodium nitrate ($NaNO_3$) and nitrite ($NaNO_2$) as primary constituents, along with sodium aluminate ($NaAlO_2$) and sodium sulfate (Na_2SO_4), have been concentrated satisfactorily by this method.[87] The decontamination factors have varied from 5×10^3 to 3×10^5.

4.3.2.10 Fractional distillation (rectification). Fractional distillation in multiple-plate or packed towers is widely used in industry as a means of separating volatile components of a mixture. The vapor rising from a still comes in contact with a condensed portion of vapor previously evolved from the same still. The reflux scrubs the higher-boiling constituents from the vapor stream, at the same time being stripped of a portion of the content of low-boiling material.

Rectification is used in Case 4 to concentrate recovered dilute nitric acid for recycle to the process, and to concentrate the ammonia solution to an industrially useful level (Sect. 4.4.11.7). Precautions must be taken to avoid the buildup of chloride and fluoride, which are highly corrosive in the nitric acid concentrator.[47,49] Fluoride is controlled by precipitation as CaF_2 before thermal denitration. An ozone sparge is used to remove chloride. Acid is withdrawn from a high-chloride plate (usually 15 to 20 wt % HNO_3) to a sparge tank, where it is contacted with a 1% ozone—air mixture. The chloride is oxidized to chlorine according to:

$$2H^+ + 2Cl^- + O_3 \longrightarrow Cl_2 + H_2O + O_2,$$

and the chlorine is removed with the ozone-air sparge mixture. Sparged acid is returned to the next lower plate in the recitifer. The ozone sparge was used successfully at the Fernald refinery in the 1950s,[47] and has been tested recently at the DOE Y-12 Plant.[88]

4.3.2.11 Activated-carbon adsorption.[70,89,90] Adsorption on granular activated carbon is one of the best commercially proven methods for removing organic chemicals from wastewater. In general, only the smaller organics (C_1 and C_2) and large complex molecules adsorb poorly or not at all. The adsorption system consists of columns loaded with granular activated carbon. Flow can either be down (fixed-bed operation) or up (expanded-bed operation). Loading rates are typically 80 to 200 ℓ/m^2 (2 to 5 gal/ft^2). Modes of operation include columns arranged in parallel, columns arranged in series, and

a moving-bed column where fresh carbon is added at the top and spent carbon is removed from the bottom in periodic pulses. The moving-bed column achieves a high degree of carbon saturation with minimum carbon inventory but requires a clarified feed containing <10 mg of suspended solids per liter. The spent carbon can be regenerated by controlled oxidation in a furnace in an oxygen-starved atmosphere. Carbon losses by oxidation and attrition as fines range from 5 to 10% per cycle. The design of the adsorption and regeneration system will depend on the equilibrium capacity of the carbon and the overall rate of absorption. In Case 4, activated carbon is used to remove volatile organic materials from the recycle water stream (Sect. 4.4.11.7).

4.3.2.12 Process changes. In addition to treatment methods applied directly to the liquid waste, the case studies include several process changes that reduce the load to the waste treatment systems:

1. operation of the primary fluorination tower with 10% excess fluorine, rather than 40% excess (reduces fluoride liquid waste, Sect. 4.4.8.3);
2. addition of a more efficient fluorine cleanup reactor (reduces fluoride liquid waste, Sect. 4.4.8.3);
3. addition of a UF_6 cleanup reactor (reduces uranium and fluoride liquid waste, Sect. 4.4.8.3);
4. addition of more efficient condensers on the fluorine cells (reduces fluoride liquid waste, Sects. 4.4.8.7, 4.4.9.1, and 4.4.9.2;
5. calcination of part of the yellow cake feed before digestion (reduces the ammonia load to waste treatment, Sects. 4.3.2.7 and 4.4.11.6);
6. elimination of sodium salts from the plant feed (facilitates recycle of the nitrate values in the SX raffinate waste, Case 4, Sect. 4.4.11.7, and provides an optional method of reducing the $NaHCO_3$ salt release in Case 3, Sect. 4.4.11.6).

4.3.3 Solid radwaste-chemwaste treatment methods

The principal solid wastes are generated by the various liquid waste treatment systems (Sect. 4.3.2). Solids are either impounded on-site or are prepared for shipment off-site.

4.3.3.1 Impoundment. The basin used for clarifying or storing liquid wastes (Sects. 4.3.2.1 and 4.3.2.2) may also serve as the storage repository for solids generated by the liquid waste treatment systems. In Cases 1 and 2, the radwaste sludges from treating the solvent extraction raffinate are impounded on-site; in all case studies, the fluoride sludges are impounded on-site (Sect. 4.4.14). This is the present practice in the industry.

4.3.3.2 Drying and drumming. Moist solid waste or concentrated liquid from an evaporator can be dried and the dry solids packaged in 200-ℓ (55-gal) drums for shipment to a licensed burial ground. Off-gases, which consist of water and any volatile chemicals, carry entrained dust.

Spray dryers[91-93] are suitable for drying a wide range of materials from solutions to pastes and are widely used in industry. Examples include gypsum ($CaSO_4 \cdot 2H_2O$), aluminum hydroxide [$Al(OH)_3$)], and potassium nitrate (KNO_3). Basically, the material to be dried is atomized into an air stream and dried as the spray droplets pass through a heated chamber. The dried product is collected by a bag filter. Spray drying is used in Case 3 to dry the precipitated radwaste solids, which are predominantly a mixture of $CaSO_4 \cdot 2H_2O$ and $Al(OH)_3$ (Sect. 4.4.11.6).

A wiped-film evaporator (described in Sect. 4.3.2.9) is used in Case 4 to produce dry crystals of the soluble salts that must be removed from the nitric acid recovery circuit (Sect. 4.4.11.7). This waste is drummed since it will require special storage. Costs include dust collecting equipment.

4.3.3.3 Fixation in cement. Incorporation in cement is an established method of waste disposal at nuclear installations. The cemented wastes are drummed and then transferred to a licensed burial ground. Cementing of slightly soluble wastes such as the precipitated solvent extraction sludges in Case 4 is beneficial in reducing the potential long-term leaching of radioactive materials by natural waters and the diffusion-controlled release

of radon if the integrity of the drums should fail. A mixture of 15% solids, 45% cement, and 40% water is generally satisfactory.[94] Cementing is of little benefit for soluble salts which are readily leached from the cemented solids even when higher cement/salt ratios are used.[94]

4.3.3.4 Incineration.[95,96] Incineration in a multiple-hearth furnace is an established method of disposal for sewage sludge and has been demonstrated in full-scale tests to recover lime from $CaCO_3$ for recycle at sewage treatment plants. Incineration is used in Case 3 to reduce the volume of chemical and biological solid wastes requiring disposal (Sect. 4.4.11.6).

The multiple-hearth furnace consists of a vertical, cylindrical, refractory-lined steel shell with self-supporting sprung arches (hearths) at intermediate points over the furnace height. The sludge passes downward through the furnace via holes located alternately at the periphery and center of a series of successive hearths. A system of plows attached to slowly rotating arms transfers the material across the hearth. This ensures that all media passing through the furnace are continuously raked to facilitate thorough drying and even combustion. The furnace is divided into three distinct operating zones: (1) the drying zone, consisting of the upper hearths where most of the moisture is evaporated and the off-gases are cooled; (2) the reaction zone at 800 to 900°C where the $CaCO_3$ is decomposed and/or biomass burned; and (3) a zone which cools the ash and at the same time preheats the combustion air. Off-gases are cleaned by passing through a cyclone and wet scrubber.

4.4 Solvent Extraction—Fluorination UF_6 Plant

4.4.1 Summary

Process. A simplified flow diagram for the solvent extraction—fluorination model plant (SX-F or "wet" process) is presented in Fig. 4.1; more-detailed flow diagrams showing Case 1 off-gas treatment are given in Figs. 4.2 - 4.4. The SX-F model plant purifies the uranium before conversion to UF_6.* The first step in the process is to dissolve the yellow cake

*In contrast, the model F-F UF_6 plant (Part 1) purifies the uranium both during and after conversion to UF_6.

in nitric acid. The uranium is then purified by solvent extraction of the uranyl nitrate with TBP, an organic chemical which combines selectively with the uranyl ion. Most of the impurities are rejected to the aqueous waste (raffinate), which is the principal radwaste from the plant. The purified uranium is thermally denitrated to UO_3 and is then reduced with hydrogen to UO_2, hydrofluorinated to UF_4, and finally fluorinated to UF_6 gas in a series of high-temperature reactors. The UF_6 product is condensed and transferred to cylinders for shipment to the enrichment plant. The model plant has two lines for the conversion of UO_3 to UF_6. The plant also produces fluorine by electrolysis of HF, a process which generates fluoride wastes but no radioactive effluents.

A number of recovery operations are carried out to minimize uranium losses and provide efficient chemical usage. High-efficiency dust collectors are used on dry materials handling operations. The ash that collects at the bottom of the fluorination tower, predominantly unburned UF_4, is recycled directly to fluorination. Other scrap containing fluoride, such as the fluorination filter fines, is recycled to solvent extraction by dissolving it in nitric acid with $Al(NO_3)_3$ to complex the fluoride. Nitric acid is recovered from the denitration off-gases, and aqueous HF from the hydrofluorinator off-gas. Although the recovered HF cannot be recycled within the UF_6 plant, it is suitable for off-site industrial usage. The base plant includes a cleanup reactor to recover fluorine; in addition, wet scrubbers are used to remove noxious gases before off-gases are released.

Advantages of the SX-F process are: (1) the technology is in the public domain; (2) "nuclear-grade" intermediate products — UO_2 for pellet fabrication and UF_4 for reduction to metal — are produced; (3) the process potentially releases smaller quantities of airborne radioactive materials than does the F-F process because there are fewer steps where semirefined yellow cake containing radium and thorium (major contributors to the dose) are handled; and (4) aqueous HF suitable for industrial use is recovered. The SX-F process has the potential for higher waterborne releases than the F-F process since it generates a large quantity of liquid nitrate waste ($\sim$5 ℓ per kg of uranium processed) containing soluble radioactive materials,

toxic heavy metals, and corrosive chemicals. This is a difficult waste to treat. In contrast, the F-F process generates a nearly insoluble calcium fluoride radwaste.

Summary tables of radioactive releases (source terms), chemical releases, treatment methods and efficiencies, and solid radwastes generated are presented in Tables 1.1 and 4.6-4.11 for gaseous, liquid, and solid wastes.

Details of the model SX-F UF_6 plant processes, the waste treatment case studies, and source-term calculations are given in Sects. 4.4.2-4.4.15. Uranium recovery and treatment of the off-gas are discussed in conjunction with the refining and conversion processes. Treatment of the liquid and solid wastes is presented in Sects. 4.11-4.14. Streams are assessed separately to show the benefit of the individual treatment methods. Many of these methods could be applied independently; for example, a plant could employ any desired combination of the features of Case 1 and Case 2 off-gas treatment, Case 3 biological denitration, and a Case 4 fluorine cleanup reactor.

Case 1 waste treatment. Case 1, the base case, represents the minimum treatment necessary to operate the process. Plant effluents are acceptable radiologically (i.e., releases are below the levels stipulated in 10 CFR 20, Appendix B, Table II Concentrations) but may not be acceptable chemically at all sites. The principal objective of the waste treatment is to recover uranium and nitric acid in cases where the economic value of the recovered material exceeds the treatment cost; other objectives are to decrease the radioactive contents of liquid effluents and to reduce the quantities of noxious fumes (e.g., HF, NO_x, and H_2S) produced since their release would create unacceptable working conditions within the plant. Waste treatment consists of (1) the installation of primary and sometimes secondary filters and scrubbers on all process off-gas streams (Table 4.8), and (2) the precipitation of radioactive materials and toxic heavy metals from the solvent extraction raffinate by barium carbonate treatment (radium control) and lime neutralization. Large quantities of nitrate salts (14 MT of NO_3^- per day) are released in liquid effluents (Table 4.10). Fluoride is removed incidentally in Case 1 by combining fluoride-bearing wastes with calcium-

bearing wastes and allowing the precipitated CaF_2 to settle. This step, which is specific to Case 1, is not a general treatment method. The cost of the waste treatment for Case 1 is considered to be a part of the base plant since most systems are essential for the operation of the process. Case 1 serves as the base for the cost/benefit analysis; it does not necessarily describe current industrial practices.

Airborne waste treatment, Cases 2-4. Case 2 off-gas treatment reduces the amounts of radioactive materials and chemicals released in the process off-gas (Tables 4.6a, 4.6b, and 4.7). Treatment consists of the installation of efficient primary, secondary, and sometimes tertiary dust collectors and wet scrubbers on all process and materials handling streams (Table 4.8). This essentially represents the practical limit of existing technology in the public domain. Airborne radwaste releases from the process are low in Case 2 (Table 4.6b). About two-thirds of the total airborne losses occur via the untreated building ventilation effluent. Case 3 applies treatment to the building ventilation and the ash degassing line (Table 4.6c). In Case 4, HEPA filters are added to the process off-gas, and bag filters (99.9% efficient) are used on the building ventilation to collect additional radioactive materials (Table 4.6d). Airborne chemical releases are further reduced by process changes (a more efficient F_2 clean-up reactor, and HF condensers) and additional scrubbers (Table 4.7). Most of the Case 4 technology is not available for immediate use either because it has not been fully developed or because it is proprietary.

Liquid nitrate waste treatment, Cases 2-4. In Case 2, the nitrate waste (the solvent extraction raffinate) is neutralized with ammonia to precipitate the bulk of the radioactive materials and is then impounded in lined lagoons (Sect. 4.4.11.5). This is a temporary solution; however, impoundment is the only alternative to releasing the nitrate that is available for immediate use, and is the method currently being used by domestic industry.[97] Case 2 is not directly comparable to the other case studies because it does not address final disposal of the nitrate. Additional waste treatment costs and/or environmental impact may be incurred in the future.

Liquid nitrate Case 3 treats the waste with barium carbonate (radium control) and lime to precipitate radioactive materials and toxic heavy metals, followed by biological nitrification (oxidation of NH_4^+ to NO_3^-) and biological denitrification (reduction of NO_3^- to N_2 gas) (Sect. 4.4.11.6). The biological system is somewhat similar to an activated-sludge sewage treatment plant. Case 3 suggests a possible way to reduce nutrient releases; the radionuclide releases are similar to those in Case 1. The effluent carries about 4 MT of sodium bicarbonate (baking soda) per day. After dilution by a small 15-cfs (0.4-m^3/sec) stream, the salt concentration is below the taste threshold. If desired, the salt release could be reduced by restricting sodium salts in the yellow cake feed. Case 3 includes calcination of part of the yellow cake feed to the UF_6 plant to reduce the quantity of ammonium salts in the waste. Case 3 has never been demonstrated on uranium refinery wastes and thus would require research and development before it is ready for industrial use.

In liquid nitrate Case 4, the radwaste and some of the corrosive chemicals are precipitated first, followed by recovery of ammonia for off-site industrial use, recovery of nitric acid for recycle, and recovery of water for recycle (Sect. 4.4.11.7). The nitric acid recovery system is based on magnesia as a carrier and includes an evaporator, a calciner, a nitric acid rectifier, an NO_x absorber, an ozone sparge (to remove chloride), and a magnesia recovery system. Alkali-metal ions create serious problems in the waste calciner. Therefore, in Case 4, sodium (and other alkali-metal ions) must be restricted in the yellow cake feed. In addition, internal process changes must be made to eliminate the use of alkali-metal ions in the refining section (but not in the UO_3 to UF_6 conversion section) of the plant. The changes in mill processes to produce the Case 4 feed will increase the costs to the mill operator but will have no adverse environmental impact at the mill. Research and development are required before Case 4 nitrate treatment is ready for commercial application.

Recovery of ammonium nitrate and other nitrate salts for industrial use. On the scale of operations of a UF_6 plant, the recovery of nitrate, which is a valuable chemical, would be more reasonable than its destruction, as is called for in Case 3. Yet, recovery as nitric acid for recycle

within the UF_6 plant will be both difficult and expensive (Case 4). Another option might be to recover a nitrate salt(s?) for industrial purposes, for example, ammonium nitrate for use as an explosive in the mining industry. A proposal has also been made to recover a nitrate salt solution for use as a fertilizer.[97] The latter would require a very high level of removal of radioactive materials and toxic heavy metals such as cadmium (poisonous to plants). Lack of sufficient information prevented evaluation of these options.

Fluoride scrub liquors, Cases 2-4. All of the advanced case studies include lime treatment of fluoride scrub liquors to precipitate CaF_2 (Sect. 4.4.12). Water scrub liquors are released, while KOH scrub liquors are regenerated for recycle. The effluent contains very low levels of radioactive materials. Internal process changes incorporated in Case 4, such as more efficient HF condensers and a more efficient fluorine cleanup reactor, reduce the fluoride load to waste treatment. Case 4 also includes complete recycle of all liquid streams bearing radioactive materials. Treated scrub liquor from the fluorine cells is released; it is surplus to the process, has not been in contact with radioactive materials, and has a low chemical concentration after treatment.

Solid radwastes Cases 1-4. The principal radwastes are the sludges generated in treating the solvent extraction raffinate (Sects. 4.4.11 and 4.4.14). These sludges contain U_{nat}, ^{230}Th, and ^{226}Ra (Table 4.11) at levels which are slightly higher than those in uranium mill tailings. In Cases 1 and 2, the sludges are impounded in lined basins near the plant. This is the practice in the industry today.[97] Final disposition of the wastes is not addressed. These sludges represent a potential source of ^{222}Rn from the decay of the ^{226}Ra. Radon is a gas and can diffuse from the waste, although the rate of emanation will be low as long as the waste is wet (Sect. 4.4.15). Additional waste treatment costs and/or environmental impact may be incurred in disposing of these wastes. In Case 3, the sludges are dried and packaged ready for shipment off-site to a licensed waste disposal facility (burial ground) or to a uranium mill for uranium recovery. In Case 4, the sludges are incorporated in concrete to isolate the waste from the environment in the event that the integrity of the drums should fail. The costs for shipping and burial are not included in Cases 3 and 4.

Solid chemwaste, Cases 1-4. In the model plant, a CaF_2 chemwaste is generated in treating the fluoride-bearing scrub liquors (Sects. 4.4.12 and 4.4.14). This type of waste is nearly insoluble and has such a low radioactive content that it is barely distinguishable from ordinary wastes containing naturally occurring radioactive materials (Table 4.11). Such waste will continue to be stored on-site until a decision is made as to its final disposition. It might be processed to recover the fluoride at some future time, or perhaps covered with earth when the pit is decommissioned.

In addition to the CaF_2 waste, the Case 4 nitrate waste treatment system generates about 0.4 MT of soluble salts such as NaOH and KNO_3 (Sect. 4.4.11.7) per day. This waste is expected to contain only low levels of radioactive materials (Table 4.11); however, it is drummed for dry storage because the salts are readily water soluble. Storage costs are not included.

4.4.2 Materials handling

Large quantities of airborne dusts, generated by the dry materials handling operations, are the source of most of the airborne release of radionuclides (Table 4.6a-4.6d). Common to these operations is the need for high-efficiency dust collecting systems to minimize the loss of uranium and to protect the health of both workers and the general public. The origin of the process dusts is described in Sects. 4.4.3-4.4.8; the dusts generated in treating wastes are discussed in Sect. 4.4.11. The treatment methods for dusts containing radioactive materials are shown schematically in Figs. 4.5 and 4.6. The treatment of chemwaste dusts generated by the advanced liquid waste treatment systems is deferred to Sect. 4.4.11.

4.4.2.1 Case studies. The base plant, Case 1, includes 99.9% efficient pulse-jet bag filters on all dust control effluents from dry materials handling operations. Aside from regulatory requirements, most of these bag filters are essential to the economic operation of the process. The material collected is automatically recycled. Six types of dusts are collected - yellow cake in the sampling plant (Fig. 4.5) (Stream 1A) and in the refinery (Stream 2A), purified UO_3 and UO_2 dusts (Stream 2C), UF_4 dusts (Stream 5A), ash dust before decay (Stream 6A), and ash dust after

decay (Stream 9A). Case 3, in addition, has a dust release from drying and drumming the radwaste (Stream 10A).* For best results, separate bag filters should be used on each individual stream in the plant since maximum efficiency is achieved when the equipment operates near design capacity; that is, separate bag filters should be supplied for drum dumping (2a), drum cleaning (2b), and so forth. The pulse-jet bag filters are in addition to the vacuum cleaner bags, which collect coarse particles and debris. Air flows used for cost estimation are presented in Table 4.12.

Case 2 treatment consists of secondary pulse-jet bag filters on all streams associated with dry materials handling. This is about the practical limit of existing technology. The purpose of the second unit is to collect particles which leak around seals or through holes in the bags of the first unit. Ordinarily, the second unit collects relatively little material. The efficiency of the secondary bag filters is assumed to be 86%.

Case 3 applies 93% efficient baffle (orifice, self-induced spray deduster) scrubbers to the building ventilation and process cooling effluent. Since two-thirds of the uranium losses in Case 2 occur through the building ventilation, greater dose reductions may be achieved by primary treatment of the building ventilation effluent than by tertiary treatment of effluents from materials handling or process off-gases (Sect. 7, Table 7.4).

Case 4 applies 99.9% efficient bag filters to the building ventilation effluent and 99.95% efficient HEPA filters to all process materials handling streams. Both capital and operating costs will be high. For cost estimating purposes, it is assumed that regular HEPA filters (HEPAs) can be used since these streams are not in direct contact with HF. However, accidental contact with HF is possible and could shorten the life of the HEPAs or require the installation of HF-resistant HEPAs, thereby increasing operating costs.

4.4.2.2 Source term calculations. Estimates of the airborne dust releases from materials handling operations are given in Tables 4.13 and 4.14. These estimates were made by analogy to similar operations at the

*Cases 1 and 2 do not address final disposal of the radwaste. Case 4 incorporates wet radwaste sludges in cement, which does not generate dust.

F-F plant (Part I) or at a uranium mill since no actual data were available.[1,2] In Case 1, dust releases via the building ventilation effluent are assumed to be 40% of the process dust releases.

The amounts of particulate radionuclides released (i.e., the source terms) are presented in Tables 4.6a-4.6d for both a "low-impurity" and a "high-impurity" feed. The following assumptions were used in estimating source terms other than uranium for the "low-impurity" feed:

1. The crude yellow cake dusts released from materials handling operations prior to solvent extraction have the same composition as the feed (Sect. 4.2.1); that is, for each curie of $U_{(nat)}$ released, the following are released: 1 Ci of ^{238}U, 1 Ci of ^{234}U, 2.34×10^{-2} Ci of ^{235}U, 1 Ci of ^{234}Th, 1 Ci of ^{234m}Pa, 8.4×10^{-3} Ci of ^{230}Th, and 6.0×10^{-4} Ci of ^{226}Ra.*,**

2. Fifty percent of the thorium and 0.5% of the radium cross with the uranium during solvent extraction (Sect. 4.2.3).

3. For each curie of purified $U_{(nat)}$ released, 0.5 Ci of ^{234}Th, 0.5 Ci of ^{234m}Pa, 4.2×10^{-3} Ci of ^{230}Th, and 3×10^{-6} Ci of ^{226}Ra are released.†

4. The fluorination ash withdrawn from the process contains 2% of the $U_{(nat)}$, 0.5% of the ^{226}Ra, and 50% of the ^{234}Th, ^{234m}Pa, and ^{230}Th originally present in the plant feed (Sect. 4.4.8.2).

5. The fluorination ash is stored 6 months before recycle to permit decay of the ^{234}Th and ^{234m}Pa.

6. As generated, the radwaste solids from treating the solvent extraction raffinate contain half the ^{234}Th and ^{234m}Pa (the half which does not cross with the uranium during solvent

---

*The "old" (prior to July 10, 1974) definition of a curie of $U_{(nat)}$.

**For the "high-impurity" feed option, the ^{230}Th and ^{226}Ra are, respectively, 4.25×10^{-2} and 4.7×10^{-3} Ci per Ci of U_{nat}.

†For the "high-impurity" feed option, the ^{230}Th and ^{226}Ra are, respectively, 2.12×10^{-2} and 2.35×10^{-5} Ci per Ci of U_{nat}.

extraction), all of the ^{226}Ra, and all of the ^{230}Th. [The long-lived ^{230}Th that crosses with the uranium in solvent extraction is recycled to the miscellaneous digester as a thorium-fluoride complex, which is rejected to the raffinate (Sects. 4.4.8.2 and 4.4.5.4).]

4.4.3 Yellow cake sampling

The yellow cake feed to the plant is received in drums, weighed, and sampled by the falling-stream method. The drum is emptied into a hopper that is equipped with an internal rotating and stirring mechanism and then discharged in such a manner that it falls in a continuous stream past straight-line automatic samplers. A 55-gal drum attached to the bottom of the chamber collects the material rejected by the sampler. Equipment is cleaned before and after use, and all material other than the sample is returned to the drum and redrummed. The sampling plant, located adjacent to the model UF_6 plant, is operated by an independent firm which serves as a referee between the mill and the UF_6 plant.

The airborne particulates and radon released by the sampling plant are assessed in Sects. 4.4.2 and 4.4.15 respectively.

4.4.4 Yellow cake storage

After sampling, the yellow cake is stored in a sealed drum for 1 month (or longer)* before being processed by the UF_6 plant. This allows time for analyses and blending feeds to "smooth out" chemical reactivity and impurities. The storage area is assumed to be under roof so that any spillage on the outside of the drums is contained within the building. This study does not address potential releases from natural water or wind effects on outside storage areas.

Radon releases from sealed drums are discussed in Sect. 4.4.15.

4.4.5 Purification (refining) by solvent extraction

The SX-F process purifies the uranium by solvent extraction from a uranyl nitrate solution using an organic chemical — tributyl phosphate (TBP),

*Longer storage time has a negligible effect on the source terms.

which combines selectively with the uranyl ion. The yellow cake from the mill must first be dissolved in nitric acid, and the purified uranyl nitrate solution must be reconverted to a dry oxide. Nitric acid is recovered from NO_x off-gases for recycle to the process. Most of the impurities in the yellow cake are rejected to the aqueous waste called raffinate, which is the principal radwaste generated by the SX-F plant (Sect. 4.4.11).

The TBP extraction is necessary to obtain the highly purified uranium needed for nuclear reactors even though the yellow cake may have been purified previously at the uranium mill by amine solvent extraction or ion exchange. TBP is very selective in separating uranium but unfortunately does not extract uranium from sulfuric acid solutions, the only acid presently considered economically acceptable for leaching the ore at the mill.

The refinery flow diagram is shown schematically in Fig. 4.2. The solvent extraction circuit is derived primarily from the DOE-Fernald flowsheet;[21] however, some features such as the solvent treatment system and nitric acid recycle reflect the systems in use at the newer Kerr-McGee plant.[22] Cases 1 and 2 are based on an idealized feed consisting of $(NH_4)_2U_2O_7$, UO_3, and $Na_2U_2O_7$. In Case 3, the amount of ammonium salt is reduced by calcining part of the feed since the waste treatment system is limited in its capacity to destroy ammonium ions (Sect. 4.4.11.6). In Case 4, sodium and chloride salts are restricted in the plant feed because they present problems in the waste treatment system (Sect. 4.4.11.7).

Descriptions of the refinery processes and the origin of the waste streams are presented in the following subsections.

4.4.5.1 Dissolution (digestion).[3,5,22] The yellow cake is dissolved in 40% HNO_3 to produce a primary aqueous feed that is 1.5 M in free HNO_3 and has a uranium concentration of 540 g/ℓ. The normal dissolver operating temperature is 90 to 105°C, and the residence time is 4 to 8 hr. Diuranates dissolve readily, with steam being the principal off-gas. The compound U_3O_8 is more difficult to dissolve, resulting in higher insoluble uranium losses, and generates an off-gas containing nitrogen oxides. Except

for highly calcined U_3O_8, greater than 99.9% of the uranium dissolves within the first 0.5 hr.[98] Equations of the following types describe the dissolution of yellow cake:

$$(NH_4)_2U_2O_7 + 6HNO_3 \rightarrow 2UO_2(NO_3)_2 + 2NH_4NO_3 + 3H_2O, \quad (1)$$

$$Na_2U_2O_7 + 6HNO_3 \rightarrow 2UO_2(NO_3)_2 + 2NaNO_3 + 3H_2O, \quad (2)$$

$$UO_3 + 2HNO_3 \rightarrow UO_2(NO_3)_2 + H_2O, \quad (3)$$

$$U_3O_8 + 8HNO_3 \rightarrow 3UO_2(NO_3)_2 + 2NO_2 + 4H_2O, \quad (4)$$

$$3U_3O_8 + 20\ HNO_3 \longrightarrow 9UO_2(NO_3)_2 + 2NO + 10\ H_2O. \quad (5)$$

Dissolution of U_3O_8 in dilute acid yields mainly NO, while the product in concentrated acid is principally NO_2.[23] Since both conditions are met during a batch dissolution, the composition of the fumes may vary during the course of the digestion.

Feeds are blended before dissolution to smooth the chemical reactivity. For example, the carbonate impurity in the product of alkaline leach mills may cause spattering from the CO_2 release during dissolution. For this reason, feeds containing carbonate are usually diluted (e.g., blended) with yellow cake from acid-leach mills. As a result of heat loss in transfer and hold tanks, the temperature of the dissolver solution is normally 30 to 50°C when the stream enters the extraction system.

The <u>various feed streams</u> to the dissolver for the model plant are presented in Fig. 4.2 and Table 4.15, including recycle streams and chemical additives which are discussed later in Sects. 4.4.5.2 - 4.4.5.8. About 33.3 MT of uranium as yellow cake from the mills, 700 kg as $Na_2U_2O_7$ recovered by solvent treatment (Sect. 4.4.5.6), and 170 kg as UF_4 scrap (Sect. 4.4.5.4) are dissolved on a daily basis. A simplified feed is considered for purposes of illustrating the waste treatment methods. In <u>Cases 1 and 2</u>, the yellow cake from the mills is assumed to be a mixture of 42.5 mole % $(NH_4)_2U_2O_7$, 42.5 mole % UO_3, and 15 mole % $Na_2U_2O_7$, which dissolves as shown in Eqs. (1) - (3) without the formation of NO_x off-gas. The yellow cake also contains 0.31 wt % carbonate (on a uranium basis), which consumes

a small amount of acid (200 kg/day) during dissolution:

$$CO_3^{2-} + 2H^+ \rightarrow H_2CO_3 \rightarrow H_2O + CO_{2(g)} \ . \qquad (6)$$

The other impurities in the yellow cake (see Table 4.2) are assumed to be present as salts which do not consume nitric acid. About 30 MT of HNO_3 is added to the dissolver on a daily basis. Approximately 45% is fresh makeup acid and 55% is recycle acid recovered from denitration of the uranyl nitrate (Sect. 4.4.5.8).

In Case 3, the quantity of ammonium salts in the dissolver feed is reduced by calcining the yellow cake under controlled conditions (Sect. 4.3.2.7). This is done to reduce the ammonium salt load to the waste treatment system (Sect. 4.4.11.6); however, some ammonium salt is needed as a salting agent for solvent extraction. The Case 3 dissolver feed is assumed to be a mixture of 60.5 mole % UO_3, 12.5 mole % $(NH_4)_2U_2O_7$, 15 mole % $Na_2U_2O_7$, and 12 mole % U_3O_8. Dissolution of this feed is similar to the Case 1 feed except that about 10% less acid is consumed and a small amount of NO_x off-gas is formed from the U_3O_8 [Eqs. (4) and (5)].

In Case 4, new restrictions that limit sodium (and other alkali-metal) salts are placed upon the yellow cake feed because such ions create problems in the waste calciner (Sect. 4.4.11.7). For purposes of the study, the feed is assumed to be ammonia-precipitated or ammonium sulfate-washed yellow cake which has been steam-dried [e.g., 50% $(NH_4)_2U_2O_7$ and 50% UO_3]. Dissolution of the Case 4 yellow cake is similar to the Case 1 example. The Case 4 waste treatment system could also handle UO_2 and MgU_2O_7 feeds.

4.4.5.2 Additives to the dissolver solution. In Cases 1, 3, and 4, $BaCO_3$ is added to the dissolver for radium control in the waste (Sect. 4.4.11.2). It is more effective to have barium present as the dissolution proceeds than to treat the waste.[21] Addition of 160 kg of $BaCO_3$ per day, which consumes about 100 kg of acid per day [Eq. (6)], is necessary in order to achieve 99% radium removal.

Substances which are sometimes added to the dissolver solution to control impurities include aluminum nitrate, fluorination ash, phosphoric acid, and iron (III).[22,23,99,100] Aluminum nitrate is added in a 1:1 mole

ratio (or higher) to complex fluoride ion. Otherwise, the fluoride ion will complex the UO_2^{2+}, thereby decreasing the uranium extraction and increasing soluble uranium losses. When feeds that are high in thorium on a chemical basis (e.g., from Canada) are processed, fluorination ash* or phosphoric acid may be added to form thorium fluoride or thorium phosphate complexes and thus obtain a better thorium-uranium separation.* Iron (III) is occasionally added to prevent the precipitation of uranium-bearing compounds of molybdenum, vanadium, arsenic, or phosphate during solvent extraction. Most feeds contain enough iron naturally as impurities.

Additives other than $BaCO_3$ to the primary dissolver are ignored in this study. It is assumed that only domestic yellow cake, which is low in thorium on a chemical basis, is processed. Under these conditions, no thorium complexing agent is added to the primary dissolver and an estimated 50% of the thorium activity crosses with the uranium during solvent extraction.

4.4.5.3 Primary dissolver off-gas treatment. Nitric acid vapor and any entrained particulates are recovered with a venturi scrubber-condenser. The condenser is followed by a 20-plate NO_x absorption tower before the tail gases are released through a stack. The dissolver system is operated slightly below atmospheric pressure so that nitrogen oxides do not escape from the process. The NO_x releases from digestion are expected to be small relative to the NO_x releases from denitration (Sect. 4.4.5.8).

4.4.5.4 Miscellaneous dissolution (scrap recycle).[22] About 0.5% of the uranium processed is recycled as fluoride scrap. This material is principally the fluorination filter fines (Sect. 4.4.8.2). Chemically, these fines are mainly UF_4 containing traces of impurities which cross with uranium during solvent extraction. Scrap containing fluoride is dissolved in nitric acid in the miscellaneous dissolver using 3 moles of $Al(NO_3)_3$ per mole of fluoride to complex the fluoride and reduce corrosion. The following equations describe the dissolution:

---

*Normally, fluorination ash is processed through the miscallaneous digestor to minimize corrosion in the main digestor (Sect. 4.4.5.4).

$$UF_4 + 4HNO_3 \longrightarrow UO_2(NO_3)_2 + 2NO_2 + 4HF, \quad (7)$$

$$3UF_4 + 8HNO_3 + 2H_2O \longrightarrow 3UO_2(NO_3)_2 + 2NO + 12HF. \quad (8)$$

Recycle ^{230}Th impurity is complexed by the fluoride and rejected to the raffinate during solvent extraction.

The off-gas from the miscellaneous dissolver is scrubbed first in a venturi scrubber-condenser and then with a KOH venturi scrubber before entering the NO_x absorber. The purpose of the KOH scrub is to prevent HF, which forms a highly corrosive mixture with HNO_3, from entering the recycle acid stream. The spent caustic scrub solution is added to the dissolver to ensure recycle of any uranium values. In Case 4, a lime slurry scrubber replaces the KOH scrubber because alkali-metal salts create problems in the waste calciner (Sect. 4.4.11.7).

4.4.5.5 Solvent extraction.[3,5,21,101] Purification is achieved by extracting the uranyl nitrate solution with 30 vol % TBP in a hexane diluent. The uranyl nitrate forms a complex with TBP $[UO_2(NO_3)_2 \cdot 2TBP_{org}]$ which extracts into the organic phase, leaving most of the impurities in the aqueous raffinate (waste). The ammonium salt that is naturally present in the feed and the nitric acid serve as salting agents.

The solvent extraction circuit is shown schematically in Fig. 4.7; the flows are presented in Table 4.16. The primary aqueous feed from the dissolver (Stream 1) is diluted by an internal extraction recycle (Stream 2) so that the extraction feed (Stream 3) has a uranium concentration of ∿450 g/ℓ and is ∿1.5 M in HNO_3. The uranium is then extracted with TBP in hexane (Stream 4), leaving most of the impurities in the aqueous extraction raffinate (Stream 2R) that is discarded as waste. The uranium-loaded organic (Stream 6) is scrubbed (washed, Stream 7) to remove impurities which may have extracted along with the uranium, and the aqueous scrub raffinate (Stream 2) is recycled to the extractor. After scrubbing, the purified uranyl nitrate (Stream 8) is stripped (reextracted) from the organic phase with a relatively large volume of 0.005 M recycle HNO_3 (Stream 9). Since nitric acid is no longer present, the purified uranyl nitrate transfers back to the aqueous phase (Stream 10). Stripping is done

at 50 to 60°C because the higher temperature decreases the stability of the uranyl nitrate-TBP complex. The purified uranyl nitrate solution, which has a uranium concentration of ∿120 g/ℓ, is scrubbed with fresh hexane to remove TBP from the aqueous product solution and is then passed through a decanter to remove entrained organic material. This prevents passage of organic matter into the subsequent evaporation and denitration steps. The uranium loss to the raffinate is assumed to be 0.10 g/ℓ.[21] Aqueous wastes are also washed with hexane before leaving the extraction area. The composition and treatment of the raffinate waste (Stream 2R) are described in Sect. 4.4.11.

Evaporative hexane losses from the solvent extraction circuit are estimated as 300 kg/day.[22] Hexane is the preferred diluent for TBP even though it is more volatile than kerosene. A plant based on the TBP-hexane flowsheet has about triple the capacity of one based on the TBP-kerosene flowsheet without major additional capital expense, and generates a waste raffinate containing only one-third as much free nitric acid.[102]

4.4.5.6 Solvent treatment. In an acid environment, TBP is subject to slow hydrolysis to dibutyl phosphate and monobutyl phosphate, which form stable complexes with the uranium in the organic phase.[23] If these hydrolysis products are allowed to accumulate in the solvent, complete stripping of the uranium from the organic phase becomes impossible. In addition, impurities in the hexane react with nitric acid to form unidentified compounds which also retain uranium in the organic phase. Since these decomposition products are acidic, they can be removed by scrubbing with base. Traces of the organic amines used to extract uranium at some of the mills may also accumulate in the organic phase.

In the model the solvent is washed with $(NH_4)_2SO_4$ solution (Fig. 4.7, stream 12), NaOH solution (stream 13), and water (stream 14).[3,22] The NaOH precipitates the uranium as $Na_2U_2O_7$. The uranium-rich aqueous stream is concentrated in a thickener, and the slurry is recycled to the dissolver. The solvent treatment waste (Stream 2T) contains $(NH_4)_2SO_4$, $NaNO_3$, NaOH, an estimated 20 ppm uranium (by analogy to an acid leach uranium mill[2]), and small amounts of solvent degradation products. Treatment of the waste

is discussed in Sect. 4.4.11. Small amounts of soluble salts are recycled to the dissolver with the uranium slurry.

In Case 4, $Mg(OH)_2$ replaces the NaOH because sodium salts create problems in the waste calciner (Sect. 4.4.11.7). Magnesium hydroxide is used at the DOE-Fernald refinery to recover uranium from waste streams.[21] Since $Mg(OH)_2$ is insoluble, any excess is recycled to the dissolver with the uranium slurry.

The liquid flows used in the model for solvent treatment are presented in Table 4.16 and the chemicals in Table 4.17. There is uncertainty in these estimates, particularly for the chemicals. Since these areas represent relatively small contributions to the waste, such errors do not significantly affect the assessment. The uranium flows are based on the DOE-Fernald refinery,[21] and chemical flows are based on the estimate that solvent treatment contributes ∿5% of the ammonium ions in the waste.[22] Caustic flows were estimated assuming 25% excess and the reaction

$$2UO_2(NO_3)_2 + 6NaOH \longrightarrow Na_2U_2O_7 + 4NaNO_3 + 3H_2O \ .$$

In addition to chemical treatment of the solvent, a bleed stream is sometimes distilled for additional purification. Evaporative hexane losses from the still are estimated as 460 kg/day.[22] The hexane release from the model plant in Table 4.7 assumes that the still operates 90 days per year (∿30% of the time that the extraction circuit is operating). There is also an unavoidable hexane loss from the solvent extraction circuit (Sect. 4.4.5.5).

4.4.5.7 Uranium trioxide production (denitration).[3,103,104] The purified uranyl nitrate solution must be reconverted to a dry oxide before conversion to UF_6. This operation is shown schematically in Fig. 4.2. The solution, which is 0.005 M in free HNO_3 and has a uranium concentration of ∿120 g/ℓ, is first evaporated to ∿500 g/ℓ and then boiled down to about 1200 g/ℓ. This corresponds roughly to molten uranyl nitrate hexahydrate.

The concentrated uranyl nitrate solution is fed into a continuously agitated bed of UO_3 particles heated to 300°C where it is thermally decomposed. The uranium trioxide product overflows through an adjustable weir into a collection bin below the reactor. Since the product is a very dense

material, it is necessary to add enough $(NH_4)_2SO_4$ (or sulfuric acid) during boildown to ensure 3000 ppm sulfate (uranium basis) in the finished product. This improves the reactivity in the subsequent reduction and hydrofluorination steps (Sect. 4.4.6.1). In the model, 138 kg/day of $(NH_4)_2SO_4$ is used. (This compound is volatilized during reduction and becomes an airborne waste.)

It is necessary to grind the UO_3 before conversion to obtain particles suitable for fluid-bed processing. This operation generates airborne dusts (Fig. 4.2, Stream 2C). In the absence of data, it is arbitrarily assumed that the dust effluent from oxide grinding after cleaning the air with a bag filter (99.9% removal efficiency) is 1.2×10^{-4} % of throughput (12 kg/year), and that grinding contributes an additional 1 kg/year to the vacuum cleaner system effluent.*

4.4.5.8 Denitration off-gas treatment and nitric acid recovery.**,3,22 Off-gases from evaporation and boildown are condensed (Fig. 4.2). Condensate that contains essentially no acid is reused as deionized water in the stripping columns. Part of the weak acid is used as scrub liquor for the NO_x absorber. An estimated 43,000 ℓ of 0.26 M HNO_3 per day, containing 4% of the nitrate value in the $UO_2(NO_3)_2$ (i.e., 710 kg of HNO_3 per day), is discarded to the aqueous waste as surplus weak acid from evaporator overheads and vacuum pump seal water (Fig. 4.2, Stream 2S).†

Fumes from the denitrator are passed through a baffle-type wet scrubber and condenser system which recover 40% nitric acid for recycle. Condensate serves as the scrub liquor. An estimated 60% of the nitrate value and most of the entrained solids are removed. Tail gases, which still contain some nitrogen oxides along with any nitrogen oxides from digestion, are drawn off to a bubble-plate absorption tower fed with condensate from the boildown step (Sect. 4.3.1.4). A 30 to 32% HNO_3 stream is withdrawn for recycle

---

*By comparison, the combined loss of yellow cake dust at a uranium mill from drying, grinding, and packaging is estimated as 1.2×10^{-3} % of the throughput with a 99.9% efficient bag filter.[2] The value for mills is calculated from data collected at mills with less efficient dust collectors.

**Nitric acid recovery from the raffinate is discussed in Sect. 4.11.7.

†Liquid waste treatment is discussed in Sect. 4.4.11.

to digestion. An estimated 2% of the nitrate value in the $UO_2(NO_3)_2$ (i.e., 260 kg/day calculated as NO_2) is released through the plant stack (Fig. 4.2, Stream 2B). Material flows are given in Table 4.18.

Although a 40% (or greater) HNO_3 solution is preferred for digestion, withdrawing a 30 to 32% product minimizes chloride corrosion problems in the NO_x absorption tower. Chloride is removed with the 32% product, whereas chloride concentrates in the tower when 40% acid is withdrawn.

4.4.6 Reduction of UO_3 to UO_2

4.4.6.1 Reduction process. Uranium trioxide is reduced to UO_2 by H_2 at a temperature of 538 to 621°C (1000 to 1150°F) according to:[105,106]

$$UO_{3(s)} + H_{2(g)} \longrightarrow UO_{2(s)} + H_2O_{(g)} \quad (\Delta H^o = -25.3 \text{ kcal}) \text{ (ref. 105).}$$

In the SX-F model, hydrogen is supplied at twice the stoichiometric amount (i.e., 100% excess)* required for reduction by cracking ammonia at 870°C (1600°F):[105]

$$2NH_3 \longrightarrow N_2 + 3H_2 \ .$$

Although the reduction reaction is exothermic, a net heat input is required for operation to raise the temperature of the feed from ambient to operating temperature and to compensate for heat losses via volatile impurities, reactant gases, convection, and radiation.[107] Careful temperature control is essential. If the temperature is above the optimum, sintering of the particle surfaces will interfere with further reaction in both the reduction and the hydrofluorination steps. Therefore, both heating and cooling must be supplied to the reduction reactors. Efficient reduction is required to permit maximum conversion to UF_4. Unreduced oxide hydrofluorinates to UO_2F_2, which in turn consumes more elemental F_2 in its conversion to UF_6 than does UF_4, evolves more heat during fluorination, and does not fluorinate as well, resulting in more ash recycle.

---

*Only 50% excess hydrogen is used in the F-F model (Part I) because the typical feed contains a large amount of sulfate impurity, which serves as a chemical promoter.[1]

The model SX-F plant utilizes two-stage fluidized-bed reduction units[3,13,105,108] which have excellent gas-solid contact and temperature control of the powder bed.* The product is a highly reactive uranium dioxide (98 to 99.7% UO_2),[13] which can be fluorinated with only a 5 to 10% excess of hydrogen fluoride.[3,108]

About 3000 ppm sulfate is added during boildown (Sect. 4.4.5.7) as a chemical promoter to increase the productivity of both the reduction and subsequent hydrofluorination steps.**[,105,106,108] During reduction, the sulfate is reduced to H_2S and volatilized.

4.4.6.2 Reduction off-gas treatment case studies. Flow diagrams for the base plant, SX-F Case 1, off-gas treatment are shown in Figs. 4.3 and 4.8. Uranium is recovered by passing the off-gas through primary and secondary sintered-metal filters with a mean pore size of 10 μ. In the SX-F process the recovered oxide fines are sent directly to hydrofluorination.† The off-gas is then burned to destroy the H_2S (from the sulfate added as a chemical promoter) and the excess H_2:

$$2H_2 + O_2 \longrightarrow 2H_2O,$$

$$2H_2S + 3O_2 \longrightarrow 2H_2O + 2SO_2.$$

Material flows are shown in Table 4.19. One hundred percent excess H_2 is used in reduction; 50% excess air is used in the burner. The SO_2 and uranium releases are estimated as 27 kg/day, or ∿0.07 vol % of the effluent gas, and 94 g/day respectively. Since data are not available for an SX-F plant, the uranium release is estimated from operational data for an F-F plant and may be high. The SX-F plant fluidizes pure, dense oxide particles from denitration. These particles may be less likely to fracture into fines than the particles used in the F-F process, which are

*The F-F model utilized single-stage fluidized beds for reduction.[1,45]

**Sufficient sulfate is naturally present as an impurity in the blended reduction feed at the F-F plant (Part I).[1]

†This is in contrast to the F-F process, where recovered fines are not suitable for fluid-bed processing and must be returned to the feed preparation (Part I).[1]

produced by pelletizing and contain significant quantities of impurities that volatilize during reduction. Airborne source terms are estimated in Table 4.6a, assuming that 50% of the thorium and 0.5% of the radium cross with uranium during solvent extraction.

In SX-F Cases 2 and 3, the off-gas from the burner is passed through a high-energy venturi scrubber which is 99% efficient on the fine 2-μ particulates (Fig. 4.8 and Table 4.19). The venturi operates hot so that water vapor (a product of the reduction reaction and of burning the excess hydrogen) does not condense in the scrubber; scrub water is recirculated. This minimizes the volume of liquid effluent which must be treated. The system consists of a gas cooler, venturi, fan, demister, water cooling tower, and water recirculation system. The uranium release is estimated as 0.9 g/day. A bleed stream of 11 ℓ of water containing 93 g of uranium is withdrawn from the scrubber system on a daily basis.* This slurry, which is recycled to the dissolver, has a negligible effect on the overall solvent extraction flows. Sulfur dioxide is not very soluble in water (2.08 g of SO_2 per 100 g of H_2O at 80°C).[109] If the venturi operates hot, <1% of the SO_2 dissolves in the scrub liquor. Airborne source terms are given in Tables 4.6b and 4.6c.

SX-F Case 4 adds HEPA filters which remove 99.95% of the particulates that pass the Case 3 system. This provision reduces the airborne uranium release from 0.9 g/day to 5×10^{-4} g/day but has no effect on the SO_2 release.

4.4.7 Hydrofluorination of UO_2 to UF_4

4.4.7.1 Hydrofluorination process. Uranium dioxide is hydrofluorinated to UF_4 by reaction with HF at temperatures of 350 to 590°C (650 to 1100°F) according to:[110,111]

$$UO_{2(s)} + 4HF_{(g)} \rightleftharpoons UF_{4(s)} + 2H_2O_{(g)}$$

$$(\Delta H^\circ = -43.2 \text{ kcal}).$$

*The bleed stream is estimated for a slurry of 1% solids. It may be possible to withdraw a more-concentrated slurry (i.e., less water).

A 10% excess (or more) of anhydrous HF is used. The hydrofluorination reaction is generally more difficult to handle than the reduction because the reaction is reversible at practical operating temperatures and is approximately twice as exothermic.[111,112] The UF_4 product and partially reacted materials sinter at relatively low temperatures; operational difficulties due to bed caking and reduced reactivity are encountered. A temperature that is too low leads to HF-water condensation and the attendant problems of powder caking and corrosion. The 50% decrease in gas volume from 4 moles of HF reactant to 2 moles of H_2O product creates problems in controlling gas flow in fluidized beds.

A fluidized-bed reactor has about two and one-half times the processing capacity of a screw reactor at the same conversion efficiency,[111] and is the preferred technique in the United States (Table 4.1). A small amount of N_2 diluent [0.8 to 1.4 std m^3/min (sm^3/min)] is added to the HF to prevent caking.[111,113] Two fluidized beds in series are used, with 65 to 70% conversion occurring in the primary hydrofluorinator.[3,107,111] This prevents sintering at localized hot spots in the primary reactor, where most of the heat is liberated, by limiting the amount of lower-melting UF_4 present (mp, 960°C vs 2176°C for UO_2).[107] One stage in the hydrofluorination serves as the cleanup reactor for HF and the other stage for UO_2, thus providing a high conversion to UF_4 and efficient HF utilization. External cooling is required for the primary hydrofluorinator to maintain the temperature below 510°C (950°F). Depending on the flowsheet, heating[107] or cooling[111] may be needed for the secondary hydrofluorinator. Conversion efficiency in the fluidized beds at the Paducah Gaseous Diffusion Plant ranges from 98.0 to 98.5%.[111] Overall uranium yield for the hydrofluorination step is 99.99%; essentially no loss occurs.[13]

4.4.7.2 Hydrofluorination off-gas treatment case studies. Flow diagrams for the base plant, SX-F Case 1, off-gas treatment are shown in Figs. 4.3 and 4.9. The dust-laden off-gas from hydrofluorination is cleaned by primary and secondary porous carbon filters that are 99.9995% efficient. Fines removed by the carbon filters go directly to fluorination (Sect. 4.4.8). Off-gases which are now low in radioactive materials pass (1) to a water-cooled condenser system that recovers a 25 wt % aqueous HF

solution for industrial use (90% efficient for HF and 90% for particulate removal); and (2) to a high-energy, water venturi scrubber (95% efficient for HF and 50% for particulate removal). Efficiencies that have been confirmed in plant experience are used for HF. The particle size of the particulates passing the carbon filters, although unknown, must be very fine; therefore, there is uncertainty in the particulate efficiencies estimated for the condenser and wet scrubbers.

Material flows for SX-F Case 1 are shown in Table 4.20. The water scrubber is a single-pass type. The gaseous effluent from the off-gas treatment system (Figs. 4.3 and 4.9, Stream 4A) consists of 1.7 sm^3/min of N_2 (used to fluidize the beds), ∿0.08 sm^3/min of water vapor, and 0.5 vol % HF. The daily airborne chemwaste and radwaste releases are 8 kg of HF and <0.3 g of uranium respectively. The uranium release is negligible compared with releases from dust control in materials handling operations (Table 4.13). The total amount of uranium passing the carbon filters and the amount of uranium released are based on operational data for an F-F plant.[15] The other source terms are estimated by assuming that 50% of the ^{230}Th and 0.5% of the ^{226}Ra cross with the uranium during solvent extraction.

Hydrofluoric acid recovery. The recovery of HF (Figs. 4.3 and 4.9, Stream 40) with the condenser serves two purposes: the amount of fluoride in the liquid waste is reduced by a factor of 10, and a valuable chemical is reclaimed. A 15% excess of HF is used in hydrofluorination at the model SX-F plant in order to recover directly an industrially usable concentration of 25 wt % HF.* No practical means of breaking the HF-H_2O azeotrope to recover anhydrous HF for recycle within the UF_6 plant is known. The recovered HF solution contains very low levels of activity and is acceptable for release off-site (see Table 4.21). Its uranium content is based

*The F-F model plant purifies the uranium both during and after conversion to UF_6. Some of the impurities (silicon, boron, molybdenum, and vanadium) volatilize during hydrofluorination, making the condensed aqueous HF unsuitable for industrial use. Therefore, the F-F model plant does not use condensers in Cases 1-3 and has a heavier fluoride load to the waste treatment system than does the SX-F model.

on operational data for an SX-F plant, as well as on the amount of uranium which passes the carbon filters at an F-F plant.[15,22]

Cases 2 and 3. The gaseous HF release is reduced to 0.16 kg/day by replacing the high-efficiency water scrubber in Case 1 with a train consisting of a medium-energy water scrubber (90% efficient for HF and for particulate removal) and a KOH packed tower (99% efficient for HF removal) (Fig. 4.10). The packed tower has a negligible effect on the very fine uranium dusts that pass the venturi scrubber. Gaseous and liquid flow rates are the same as in Case 1 (Table 4.20), except that there is an additional KOH waste stream. The KOH scrubber is a recirculating system to minimize the volume of caustic waste requiring treatment.

SX-F Case 4. This case study illustrates the effect of replacing the water venturi scrubber in Cases 2 and 3 with a brine-cooled condenser, which increases the aqueous HF recovery from 90% to 99% (Fig. 4.10). Case 4 also has HF-resistant HEPA filters to further reduce the already low airborne release of uranium from 0.3 g to 0.1 mg per day (Table 4.20). The airborne HF release of 0.16 kg/day (63 μg/ℓ) is the same as in Cases 2 and 3. The brine-cooled condenser is beneficial in reducing the fluoride load to the liquid waste treatment system and associated CaF_2 chemwaste by a factor of 10 (Sect. 4.4.12) but offers no advantage over the water scrubber in the off-gas treatment.

4.4.8 Fluorination of UF_4 to UF_6

4.4.8.1 Fluorination process, SX-F Cases 1-3.[13,108,114] The SX-F model plant uses a tower flame reactor to burn the UF_4 with F_2 to F_6 at a temperature above 1100°C:

$$UF_4(s) + F_2(g) \longrightarrow UF_6(g)$$

$$(\Delta H^\circ = -6 \text{ kcal}) \text{ (ref. 115).}$$

The reactor is a ∿20-cm-diam by 3.6-m-long Monel pipe with steam cooling coils on the outside to maintain the wall temperature between 315 and 540°C. At the top of the tower, particles of UF_4 are dispersed into a stream of F_2 which has been preheated to 315 to 370°C. The UF_4 particles burn as

they fall through the tower. Unburned UF_4 falls to the bottom, while the UF_6 product, being volatile, leaves the reactor with the effluent gas stream. Most impurities in the UF_4 are not volatile during fluorination.

SX-F Cases 1-3 are based on 40% excess F_2 in the feed to the primary tower with no recycle of F_2 to the primary tower (i.e., an "older" DOE flowsheet).[108,114] While F_2 utilization as high as 90% for the primary tower[13,108] has been reported, some of the DOE technology is classified and not available for industrial use.

UF_6 collection. Gases from the primary fluorination tower, including UF_6, 40% excess F_2, HF (an impurity in the fluorine), and inert gases (to control the UF_4 feed to the tower), pass through primary and secondary sintered-nickel or Monel filters to the first set of UF_6 cold traps, which are chilled to -18 to -29°C. Noncondensable gases (i.e., F_2, HF, and inert gases contaminated with a little UF_6) then pass to the fluorine cleanup reactor. The UF_6 product is melted, any entrained gases such as HF are allowed to vaporize into the off-gas system, and the pure UF_6 is drained into a 10-ton shipping cylinder. The heat exchanger surfaces were designed so as to avoid premature plugging and to minimize entrainment carryover of condensed UF_6 (see ref. 116).

Fluorine cleanup reactor, SX-F Cases 1-3. The effluent from the first set of cold traps serves as the fluorine feed to a second tower reactor, which operates with a 35% excess of UF_4 (Fig. 4.11). The cleanup tower is assumed to be 90% efficient on fluorine removal. The effluent from the cleanup reactor passes to a second set of filters and refrigerated cold traps. The bulk of the UF_6 is removed in the first cold trap, which is chilled to -18 to -29°C; the remaining UF_6 is removed in smaller traps chilled to -40 to -50°C.[116] Noncondensable gases [i.e., F_2, HF, and inert gases contaminated with 0.05 to 0.10 vol % of UF_6 (ref. 114)] leave the system by means of an air ejector and pass to the fluorination off-gas treatment system (Sects. 4.4.8.3 and 4.4.8.4). Overall fluorine utilization for the primary and cleanup tower reactors in Cases 1-3 is estimated as 96%. The excess UF_4, which falls to the bottom of the cleanup tower, is recycled to the primary fluorinator.

4.4.8.2 Ash (scrap recycle). A small fraction (∿2%) of the uranium is not burned to UF_6 in the primary tower fluorinator. Roughly 1.5% of this falls to the ash hopper at the bottom of the tower as unburned UF_4,[22] which is later ground and recycled to the tower. The other 0.5% is blown to the fluorination filters.[22] The traces of impurities that cross with the uranium during solvent extraction are lighter than the unburned UF_4 and are also blown to the filters. Because of the impurities, the filter fines are recycled to solvent extraction via the miscellaneous digestor (Sect. 4.4.5.4). Thus, nonvolatile impurities that cross with the uranium during solvent extraction ultimately leave the process in the solvent extraction raffinate.

The yellow cake feed to the UF_6 plant contains ^{234}Th and its short-lived daughter, ^{234m}Pa, in secular equilibrium with the ^{238}U. An estimated 50% of this activity crosses with the uranium during solvent extraction. It is nonvolatile during fluorination, tending to concentrate in the fluorination filter fines. This assessment assumes that the fluorination ash is stored for 6 months to permit decay of the ^{234}Th and ^{234m}Pa before the ash is ground and recycled. The ash also contains some ^{230}Th and a trace of ^{226}Ra, which are long-lived and do not decay appreciably. The fluoride in the ash complexes thorium during solvent extraction so that most of the recycle ^{230}Th is rejected to the raffinate (Sects. 4.4.5.2 and 4.4.5.4).

Handling and grinding the ash generate airborne dusts. The source terms for ash dust releases (Sect. 4.4.2) are based on (1) collection and drumming of the ash, (2) storage of the ash for 6 months to permit decay of the ^{234}Th and ^{234m}Pa, (3) drum dumping, (4) ash grinding and drumming, and (5) drum dumping when the ash is recycled to the process. Since data were not available, the amount of dust generated in these operations was estimated by analogy to similar operations in handling yellow cake at uranium mills and at the F-F UF_6 plant (Part I).[1,2]

4.4.8.3 Fluorination process, SX-F Case 4. This case study incorporates three internal process changes which increase fluorine utilization, thereby decreasing the load to the waste treatment system. Although the DOE flowsheets have been described in the open literature, part of the technology is still classified. Case 4 assumes that, at some future time,

either comparable technology will be developed by private industry or the DOE technology will be made available to the general public. No costs are assessed for the Case 4 process changes since the savings in fluorine costs justified the installations at the DOE plants.*

The primary fluorination tower operates with 10% excess F_2 rather than the 40% excess assumed in Cases 1-3. This is accomplished either by recycling F_2 with a 10% bleed or by operating the tower at a negative pressure with a 10% excess feed.[108]

Fluorine cleanup reactor.[117] Tail gases from the primary fluorination UF_6 cold traps, which contain significant values of fluorine, are passed to a UF_4 fluidized bed operated at 750°F, where the fluorine is reacted with an excess of UF_4. Uranium tetrafluoride is added at a rate up to five times stoichiometric to provide dilution control of bed temperature and to avoid coalescence of unstable uranium fluoride intermediates such as U_4F_{17}, U_2F_9, and UF_5. An advantage of the fluidized-bed reactor is that an excess of UF_4 is always available, regardless of the inlet fluorine concentration — a condition not always true with tower cleanup reactors. Exit gases consisting of UF_6 product, HF (from the HF impurity in the fluorine), inert impurities, and traces of F_2 are passed through sintered-metal filters to a UF_6 cold trapping system and the waste treatment system. Solids withdrawn from the fluorine cleanup reactor are then fluorinated in the primary fluorinator to obtain essentially complete conversion to UF_6. The cleanup reactor recovers >95% of the fluorine; on-stream time is 90%.

Uranium hexafluoride cleanup reactor.[117,118] The recovery of UF_6 is increased (and the load to the waste treatment system reduced) in Case 4 by adding a UF_6 cleanup reactor after the F_2 cleanup system. This reactor is a UF_4 fluidized-bed type which is similar to the F_2 cleanup reactor except that it is operated at 150 to 200°C and 14 to 16 psi (1.0 to 1.1 kg/cm^2). Under these conditions, the UF_6 gas reacts with the UF_4 solids to form nonvolatile compounds:

---

*ALARA studies do not consider development costs.

$$UF_6 + 7UF_4 \rightleftharpoons 2U_4F_{17},$$

$$2UF_6 + 3U_4F_{17} \rightleftharpoons 7U_2F_9,$$

$$UF_6 + U_2F_9 \rightleftharpoons 3UF_5.$$

The UF_6 content of the gas is reduced from an inlet concentration of 300 ppm to 1000 ppm to an exit concentration of 20 ppm under plant conditions.[117] The UF_4 can absorb up to 0.38 kg of UF_6 per kilogram of UF_4. Solids withdrawn from the UF_6 cleanup reactor are fluorinated in the primary fluorinator to obtain essentially complete conversion to UF_6.

4.4.8.4 Fluorination off-gas treatment, SX-F Case 1. Flow diagrams for the base plant off-gas treatment system are shown in Figs. 4.3 and 4.11. Fluorine, prepared by the electrolysis of HF, is passed through a relatively inefficient (27%) condenser, which returns some HF to the electrolytic cells (Sect. 4.4.9). This HF condenser is considered with the fluorination off-gas treatment since the HF impurity in the F_2 is a significant part (one-half) of the waste treatment load. Off-gases from fluorination consisting of excess F_2, HF, inert gas, UF_6 product, and various impurities are cleaned by primary and secondary sintered Monel or nickel filters and the UF_6 cold trap system (see Sect. 4.4.8.2). Noncondensable gases (F_2, HF, and inert gases bearing traces of UF_6) are ejected to a KOH scrubbing system that serves the dual functions of recovering uranium and removing noxious gases. The venturi scrubber is assumed to be 99% efficient on UF_6, F_2, or HF. The efficiencies for UF_6 and F_2 were estimated by analogy to KOH scrubbing of HF.[40]

The technology for the operation of KOH scrubbers in industry is proprietary. This survey assumes that the scrubbers are recirculating systems which operate between 10 and 2 wt % KOH, and that the principal chemical reactions are:

$$F_2 + 2KOH \longrightarrow 2KF + H_2O_2,$$

$$2H_2O_2 \longrightarrow 2H_2O + O_2,$$

$$HF + KOH \longrightarrow KF + H_2O,$$

$$2UF_6 + 14KOH \longrightarrow K_2U_2O_7 + 12KF + 7H_2O,$$

$$UF_6 + 10KOH + 3H_2O_2 \longrightarrow K_4UO_8 + 6KF + 8H_2O.$$

Potassium diuranate is insoluble and precipitates in the scrubbers, while the compound K_4UO_8 is soluble.[119] A number of other peroxy-uranium compounds, including fluoride-containing complexes, are known and might be formed.[119] Such compounds are only slightly soluble and would precipitate in the scrubber. Peroxy-uranium compounds are expected only when there is an excess of F_2. Since UF_6 is only a minor component of the fluorination off-gas, the exact chemical behavior of uranium in the scrubbers has little effect on the overall assessment.

Fluorination waste streams and material flows are presented in Table 4.22. The load to the waste treatment system, Stream 8, is estimated as 2.18 sm^3/min of "inert" gases (nitrogen used to control the addition of UF_4 to the tower, seal leakage, and oxygen from the fluorination of oxide or oxyfluoride impurities in the UF_4), 0.092 sm^3/min of F_2 [90% F_2 utilization (i.e., the highest reported by Ruch et al.[4])], 0.21 sm^3/min of HF (8 vol % HF impurity in the F_2 feed to fluorination - Stream 7F), and 0.002 sm^3/min of UF_6 [0.08 vol % of the effluent gas from the cold traps (i.e., the average reported by Smiley[114])]. The total fluoride load is 500 kg/day; the uranium load is 30 kg/day.* The gaseous effluent released to the atmosphere from the fluorination scrubbing system carries 5.0 kg of HF and 300 g of uranium per day. Elemental fluorine is very reactive with water, forming HF, and is therefore not released. A total of ∿19,000 ℓ of the 10% KOH solution is used in the scrubbers per day. The calculations are based on the assumption that all the uranium goes to the soluble K_4UO_8, which increases the KOH requirements by ∿3% as compared with basing the calculations on $K_2U_2O_7$.

---

*Because of the impurities in the UF_4, the F-F model plant cannot use a tower cleanup reactor for fluorine. Therefore, in Cases 1-3 the F-F model has a heavier load of both UF_6 and fluoride to the waste treatment system and requires a more extensive scrubbing system than does the SX-F model.

The release of radioactive materials other than uranium is low because the daughters (except radon) are nonvolatile during fluorination. Particulates are removed from the off-gas by the sintered-metal filters. The impurities remaining after burning the UF_4 are lighter than the unburned UF_4 and tend to concentrate in the filter fines. This assessment assumes that (1) the amount (i.e., kilograms) of uranium dust passing the fluorination filters is equal to the amount passing the reduction filters; (2) the concentrations of ^{234}Th, ^{234m}Pa, and ^{230}Th in this dust are about ten times higher than their concentrations in the UF_4 feed to fluorination;[67] and (3) 50% of the ^{234}Th and ^{230}Th and 0.005% of the ^{226}Ra cross with the uranium during solvent extraction. The UF_6 cold trapping system is assigned an efficiency of 95% for 2-μ particulates since it contains fins, baffles, and a demister[116] and resembles an impingement dust collector to some extent. Although the dust passing the sintered-metal filters is extremely fine, UF_6 is expected to condense on the particles, increasing the particle size and hence the collection efficiency of the cold trap system. The venturi scrubbing system collects 80% of the particulates passing the cold traps. Source terms based on these assumptions are presented in Table 4.6a. Uncertainty is associated with these source terms.

4.4.8.5 Uranium recovery from scrub liquors. Uranium is recovered from the spent KOH scrub liquor by destroying the soluble peroxy complex and allowing the uranium to precipitate. The chemistry is unknown. The flowsheets (Table 4.22) assume that CO_2 destroys peroxy-uranate by analogy to the chemistry of alkali peroxides:[120]

$$2(UO_8)^{4-} + 6CO_2 + 6OH^- + 2K^+ \longrightarrow K_2U_2O_7 + 6CO_3^{2-} + 3O_2 + 3H_2O.$$

Ferrous and cuprous ions catalytically decompose peroxides and may also be added. The precipitated $K_2U_2O_7$ is recovered and recycled to the miscellaneous digestor (Sect. 4.4.5.4). The calculations assume that all the uranium is present as the soluble peroxy complex and that a 100% excess of CO_2 is necessary for its destruction. The uranium content of the waste KOH solution (Fig. 4.12, Stream 8K) is estimated as 30 ppm, based on a typical soluble loss for an alkaline-leach uranium mill which precipitates $Na_2U_2O_7$ from carbonate solutions.[121] Source term estimates assume that half of the fine particulates (i.e., the radium and thorium) are

carried by the uranium precipitate (Fig. 4.12, Stream 8Ub), while the other half remain suspended in the spent KOH solution (Fig. 4.12, Stream 8K).

4.4.8.6 Fluorination off-gas treatment, SX-F Cases 2 and 3. The HF and uranium releases are reduced to 0.05 kg/day and 3 g/day, respectively, by adding a KOH packed tower to the Case 1 system (Fig. 4.11). This unit is 99% efficient for the removal of F_2, HF, and UF_6, and 50% efficient for fine particulates (i.e., thorium and radium). Liquid and gaseous flow rates are the same as those in Case 1 (Table 4.22). Source terms for radioactive materials are given in Tables 4.6b and 4.6c.

4.4.8.7 Fluorination off-gas treatment, SX-F Case 4. The flowsheet is shown in Fig. 4.12. This case study incorporates a number of process changes which reduce the load to the waste treatment system. The primary fluorination tower operates with 10% excess fluorine rather than the 40% excess that is assumed in Cases 1-3. The 27% efficient HF condensers on the fluorine feed (Stream 7F) are replaced with 65% efficient condensers, and the 90% efficient F_2 cleanup tower is replaced with a 95% efficient F_2 cleanup fluid-bed reactor (Sect. 4.4.8.3). In addition, a 97.5% efficient UF_6 cleanup reactor is added (Sect. 4.4.8.3). These process changes reduce the fluoride and uranium loads to the wet scrubbing system by factors of 3 and 60 respectively. The KOH scrubbing system is the same as in Cases 2 and 3. A 99.95% efficient, HF-resistant HEPA filter is added as a final cleanup for fine particulates. None of the Case 4 technology is available for immediate use by the industry. Case 4 assumes that either similar technology will be developed by private industry or that the DOE technology will be made available to commercial firms.

Case 4 fluorination waste streams and material flows are presented in Table 4.22. The load to the wet scrubbing system, Stream 8, is estimated as 1.64 sm^3/min of "inert" gases, 0.012 sm^3/min of F_2, and 0.099 sm^3/min of HF. The total fluoride load is 149 kg/day, while the uranium load is 0.5 kg/day. The gaseous effluent from the system carries only 0.03 kg of HF and 5×10^{-5} g of uranium on a daily basis. Source terms for radioactive materials are estimated in Table 4.6d. About 5.500 ℓ of 10 wt % KOH per day is used in the scrubbers.

4.4.8.8 Ash degassing and UF_6 sampling. A small quantity of UF_6 gas is lost when cylinders are sampled, and when tower ash and filter fines are removed from the system due to degassing of entrained UF_6. This gas is vented through the plant vacuum cleaner system. Bag filters are ineffective on gaseous effluents, although they will remove hydrolysis products if any moisture is present. This is a small source (67 g/day), and no treatment is provided in Cases 1 and 2. However, a KOH high-energy venturi scrubber (99% efficient) is added in Case 3, and the venturi scrubber plus an HF-resistant HEPA are used in Case 4. The uranium release was estimated by analogy to the F-F plant and may be high since F-F ash contains the CaF_2 bed material in addition to unburned UF_4 (Part I, Sect. 4.4.8.1), while the SX-F ash consists primarily of UF_4. Particulate releases are considered in Sect. 4.4.8.2.

4.4.9 Fluorine production

4.4.9.1 Fluorine production process.[52,122] The production of UF_6 requires large quantities of fluorine gas, which is produced on-site by electrolysis of HF in an anhydrous fused electrolyte, KF·2HF [mp, 71.5°C (160.7°F)]. When a direct current is passed through the electrolyte, both fluorine and hydrogen are evolved and are collected in the anode and cathode compartments, respectively, above the electrolyte surface. These gases are removed through separate piping systems, and the hydrogen fluoride that is consumed is replaced continuously. The fluorine and hydrogen streams are piped to electrolyte entrainment separators. The gases are then admitted to surge tanks which dampen pressure fluctuations. At this point in the system, the fluorine gas contains 11 vol % HF and the hydrogen gas contains 9 vol % HF.[52] Some of the HF is recovered by condensation for recycle to the electrolytic cells. From the heat exchangers, the fluorine is piped to the primary fluorination unit; the hydrogen is waste. The cells operate under corrosive conditions and must be rebuilt periodically. Approximately 80% of the electrolyte from failed cells is decanted and reused.[52] The model plant generates an estimated 12,000 kg of non-radioactive cell sludges per year. This waste is treated along with other fluoride wastes.

Cases 1-3 have relatively inefficient (27%) HF condensers; Case 4 has 65% efficient, -84°C condensers on the fluorine cells. A lower limit on the amount of HF impurity in the gases is fixed by the polymerization of HF.[52] The condenser system used in Case 4 is not presently available to private industry. Case 4 assumes that either industry will develop comparable technology or that the DOE technology will be made available. The HF recovery streams are shown in Fig. 4.4 and detailed in Table 4.23. The flows to the condensers (Streams 7D and 7E) are ∿3% lower in Case 4 because of more efficient fluorine ultilization in fluorination (Sect. 4.4.8.2).

The off-gas treatment system for the fluorine cell hydrogen (Fig. 4.4, Stream 7C) is described in the following subsection. This off-gas is not radwaste since it has never been in contact with radioactive materials; however, it contains a noxious chemical, HF, whose release would be unacceptable. The off-gas treatment for the fluorine cell fluorine (Fig. 4.4, Stream 7F) is discussed in Sect. 4.4.8.

4.4.9.2 Fluorine cell hydrogen off-gas treatment. In SX-F Case 1, the hydrogen waste from the HF condenser (Stream 7C, Figs. 4.4 and 4.13) is burned in 50% excess air to destroy the hydrogen and the resulting mixture is water-scrubbed in a high-energy venturi scrubber (95% efficient for HF). The composition of the feed to the burner is 2.6 sm^3/min of H_2 and 200 kg/day of HF. The effluent released contains 10 kg of HF per day. No radioactive materials are released. Material flows are shown in Table 4.23.

SX-F Cases 2 and 3. The gaseous HF release is reduced to 0.20 kg/day by replacing the high-efficiency water scrubber in Case 1 with a train consisting of a medium-energy water scrubber-condenser (90% efficient for HF removal) and a KOH packed tower (99% efficient for HF removal). It is important to avoid water condensation in the KOH scrubber since liquid waste treatment in Cases 2-4 is based on regeneration and recycle of all caustic scrub solutions (Sect. 4.4.12).

SX-F Case 4. The load to the off-gas treatment system is reduced by a factor of 2 by substituting more-efficient, -84°C condensers (67% efficient vs 27%, Fig. 4.13) and improving the fluorine utilization (99.5% vs

96%, Sect. 4.4.8.3). This technology is not available to industry at the present time. About 0.09 kg of HF is released to the atmosphere on a daily basis. Material flows are presented in Table 4.23.

4.4.10 UF_6 cylinder wash

The enrichment plant may recycle empty cylinders to the UF_6 conversion plant for reuse. The returned cylinders are washed with Na_2CO_3 solution to recover traces of uranium and remove other impurities. The uranium is precipitated with NaOH and purified by solvent extraction; the spent solution is added to the solvent extraction wastes. This operation does not have any significant effect on either plant effluents or waste treatment methods except in Case 4, where sodium ions must be restricted (Sect. 4.4.11.7).

4.4.11 Treatment of the raffinate and other aqueous wastes from solvent extraction

The refining of uranium ore concentrate (yellow cake) by the solvent extraction process generates a large volume of liquid nitrate waste containing soluble radioactive materials, including long-lived ^{226}Ra and ^{230}Th. The case studies address the removal of nitrate and ammonium, as well as radioactive materials, since these chemicals are also of concern in the environment.[123] The general outline of the case studies is as follows:

Control applied	Waste treatment method			
	Case 1	Case 2	Case 3	Case 4
Radium	$BaCO_3$ precipitation	None	$BaCO_3$ precipitation	$BaCO_3$ precipitation
Radwaste-chemwaste	$Ca(OH)_2$ precipitation	NH_3 precipitation	$Ca(OH)_2$ precipitation	Two-stage $Mg(OH)_2$/ $Ca(OH)_2$ precipitation
Nitrate, ammonium	Released	Impounded	Biologically destroyed	Recovered
Water	Released	Evaporation and impoundment	Released	Recovered

Case 1 may not be acceptable at all sites because of the large quantities of chemicals that are released. Case 2 is not directly comparable to the other case studies because it does not address final disposal of the nitrate wastes. The Case 3 and 4 systems have not been demonstrated on uranium refinery wastes; research and development would be required before they are ready for industrial application.

4.4.11.1 Quantity and composition of solvent extraction wastes. The flows to the model waste treatment facility which serve as the base for the assessment are presented in Table 4.24. On a daily basis, the liquid flows are as follows: 76,000 ℓ (20,000 gal) of solvent extraction raffinate, 45,000 ℓ (12,000 gal) of solvent treatment waste, and 43,000 ℓ (11,000 gal) of surplus weak acid. The raffinate is principally a relatively dilute solution of HNO_3, NH_4NO_3, and $NaNO_3$. It is not economical to recover the nitrate from the waste. There is a large volume of this waste, and the chemical load to the treatment facility is heavy -- containing, on the average, an estimated 13 MT of nitrate, 1 MT of ammonium, and 0.9 MT of sodium ions per day. The raffinate also contains all the impurities in the yellow cake feed, including 1 MT/day of sulfate (Table 4.2) as well as chemicals such as aluminum and fluoride compounds which are added as part of the refining process or scrap recycle at the UF_6 plant (Sect. 4.4.5.4). Chemicals other than those listed may also be present in the raffinate since UF_6 plants only analyze for substances which create difficulties in the process. The solvent treatment waste contains $NaNO_3$ and $(NH_4)_2SO_4$ (Sect. 4.4.5.6); the surplus weak acid stream is a dilute HNO_3 solution (Sect. 4.4.5.8). There is considerable variation in the wastes on a day-to-day basis because of variations in the chemical composition of the yellow cake feed to the UF_6 plant.

The advanced case studies include internal process changes at the UF_6 plant and at the uranium mill to change the composition of the waste so that it is more easily treated. On a daily basis, the ammonium load is reduced from 1100 kg in Case 1 to 350 kg in Case 3, and the sodium load from 900 kg in Case 1 to 70 kg in Case 4 (Table 4.25). These changes are discussed in Sects. 4.4.11.6 and 4.4.11.7.

The raffinate contains small quantities of natural uranium and its radioactive daughters (Table 4.26). The uranium content is assumed to be 7.6 kg/day (0.10 g/ℓ).[21] All of the long-lived ^{230}Th and ^{226}Ra, which enter the plant as impurities in the yellow cake feed, are ultimately rejected to the solvent extraction raffinate (Sects. 4.2.2 and 4.4.5.4). These radionuclides are present at low levels and comprise only a small part of the total activity. However, they are of concern because they have long half-lives and, once ingested, are excreted from the body very slowly (Sect. 7). This is in contrast to uranium, which is excreted from the body fairly readily. Radium-226 is of particular concern in liquid effluents; in Case 1 it contributes 50% of the dose from drinking the water of the receiving stream and 80% of the dose from eating the fish who live in the stream (Sect. 7, Table 7.14).

Most of the total activity in the waste, as generated, is due to the ^{234}Th and ^{234m}Pa. These radionuclides, which have relatively short half-lives (24 days and 1 min respectively), are in secular equilibrium with the uranium in the plant feed and are separated from it during processing. They are minor contributors to the off-site dose since their short half-lives preclude accumulation in the bioenvironment (Sect. 7). The model assumes that 50% of the ^{234}Th (and associated ^{234m}Pa) is rejected to the raffinate, while the other 50% is extracted with the uranium and permitted to decay before the fluorination ash is recycled (Sects. 4.4.5.2 and 4.4.8.2). In the event that a thorium complexing agent were added to the primary dissolver, most of the ^{234}Th would be rejected to the raffinate. While the source terms for the liquid waste would be larger, the assessment would not be significantly affected except that a longer detention time would be required to permit decay of ^{234}Th before release of treated effluents in Cases 1 and 3.

The U_{nat} content of the solvent treatment waste is estimated as 0.9 kg/day (0.02 g/ℓ). Small quantities of uranium daughters may also be present, but this is a minor source compared with the raffinate. The surplus weak acid is principally condensate containing little or no activity; however, it may include wastewater collected in the refinery sump. This source is expected to be small relative to the raffinate. Treatment is provided in the case studies.

4.4.11.2 Barium carbonate treatment for radium control, Cases 1, 3, and 4. In Cases 1, 3, and 4, $BaCO_3$ is added to the dissolver feed (i.e., before solvent extraction) to remove radium by coprecipitating $(Ba,Ra)SO_4$:

$$(Ba,Ra)^{2+} + SO_4^{2-} \longrightarrow (Ba,Ra)SO_4.$$

This addition, which allows the barium ions to be present as the yellow cake dissolves and the radium and sulfate impurities become available is more effective than treating the waste.[21] The $(Ba,Ra)SO_4$ solids are separated from the liquid waste in conjunction with the neutralization step (Sect. 4.4.11.3). This is shown in Fig. 4.14 for Case 1; Cases 3 and 4 are similar.

The case studies include two levels of radium removal by $BaCO_3$ treatment — 99% removal when processing yellow cake containing "low" levels of radium (200 pCi/g of U_{nat}), and 99.8% removal for the feed containing "high" levels of radium (1600 pCi/g of U_{nat}). The "low-impurity" feed is thought to represent the annual average feed to UF_6 plants. Since data on the $BaCO_3$ treatment are limited, the systems are designed on the basis of theoretical principles.* This approach is realistic for 99% radium removal and conservative (i.e., slightly high) on chemical requirements compared with the operating experience at the Fernald refinery.[21] The 99.8% radium removal has not been demonstrated. The following assumptions were used in designing the systems:

1. The Ra/Ba ratio in the solution is the same as that in the precipitate.[124,125]

2. The solvent extraction raffinate (before dilution with solvent treatment wastes and surplus weak acids) contains about 1.25 M HNO_3 (Sects. 4.4.5.5 and 4.4.11.1).

3. The solubility of $BaSO_4$ in 1.25 M HNO_3 is 0.025 g/ℓ at room temperature.[126] (The solubility of $BaSO_4$ in nitric acid increases with increasing acid concentration.)

---

*At present, the domestic industry does not routinely use $BaCO_3$ treatment; instead, the practice is to impound both liquid and solid wastes in lagoons (i.e., similar to Case 2).[97]

4. Yellow cake feed from acid-leach mills contains sufficient sulfate impurity naturally to precipitate the barium.

5. Yellow cake feed from alkaline- (carbonate-)leach mills contains little, if any, sulfate impurity and is relatively high in radium [900 pCi/g U_{nat} compared with 6 pCi/g and 300 pCi/g for yellow cakes from acid-leach mills using the amine solvent extraction and ion exchange processes respectively (Part I, Table A-1)]. Therefore, the case studies assume that $Al_2(SO_4)_3$ is added when the model plant processes alkaline-leached yellow cake (15% of the feed; Sect. 4.2.1) to ensure that sufficient sulfate is present.

6. An excess of sulfate does not have a repressive effect on the solubility of $(Ba,Ra)SO_4$ up to 0.3 N SO_4^{2-} (i.e., the conditions at the refinery).[124]

On an average daily basis, the chemical requirements for 99% radium removal are 160 kg of $BaCO_3$ and 17 kg of $Al_2(SO_4)_3$; the corresponding requirements for 99.8% radium removal are 800 and 87 kg. The $Al_2(SO_4)_3$ is added only when low-sulfate feed (i.e., alkaline-leached yellow cake, 15% of the feed) is being processed.* On some days none is added, while on other days 60 to 120 kg might be added for 99% radium removal (300 to 600 kg for 99.8% removal), depending on how feeds are blended. The system generates 190 kg of $BaSO_4$ radwaste per day for 99% radium removal (940 kg/day for 99.8% radium removal). This radium is removed in conjunction with the neutralization solids (Sect. 4.4.11.3). The quantity of aluminum ions added to supply sulfate is small relative to the aluminum salts already present in the waste (1% for 99% radium removal).

4.4.11.3 Neutralization to precipitate radwaste-chemwaste, Cases 1-4. In all case studies, the solvent extraction wastes are neutralized to precipitate most of the radioactive materials and toxic heavy metals, together with some chemicals. Lime slurry [$Ca(OH)_2$] is used in Cases 1 and 3, ammonia gas in Case 2, and magnesia slurry [$Mg(OH)_2$] in Case 4.

---

*UF_6 plants routinely analyze the feed for sulfate.

Aluminum and iron are precipitated as gelatinous hydroxides in each case. When lime is used, gypsum ($CaSO_4 \cdot 2H_2O$) and other calcium salts such as $CaMoO_4$ and $Ca(VO_3)_2$ are also precipitated. The corresponding ammonium and magnesium compounds are soluble. The $BaSO_4$ from radium removal (Sect. 4.4.11.2) and impurities in the yellow cake such as silica, which do not dissolve in nitric acid, are removed at the same time. These sludges constitute the principal radwaste generated by the model plant. The liquid waste remaining still contains a large quantity of nitrate and other soluble salts; it is either released (Case 1) or treated in the nitrate treatment systems. The following paragraphs discuss the radwaste sludges in general terms. Specific application to the case studies and the nitrate treatment system is given in Sects. 4.4.11.4-4.4.11.7.

Quantity and chemical composition of the solid radwaste. In the absence of data, the quantity and chemical composition of the solid wastes are estimated in Table 4.27, based on the most likely chemical form and solubility. The choice of neutralizing agent makes a significant difference. On a daily basis, lime neutralization combined with $BaCO_3$ treatment at 99% radium removal generates an estimated 4.0 MT of solid radwaste (Case 1), compared with only 1.4 MT with ammonia neutralization (Case 2) or 2.3 MT with magnesia neutralization plus $BaCO_3$ treatment (Case 4). The major differences are (1) the large amount of sulfate precipitated by lime as $CaSO_4 \cdot 2H_2O$ (1.4 MT), while the corresponding ammonium and magnesium salts are soluble; and (2) the estimated 0.5 MT of excess $Ca(OH)_2$ or $Mg(OH)_2$ that contaminates the solids because the alkaline-earth hydroxides have a low solubility in water, while ammonia is water soluble. Case 3 uses lime precipitation but differs from Case 1 in that the solids are centrifuged, washed, and dried at 280°C instead of being collected in a settling basin.

Ammonia neutralization offers an advantage in that it generates the minimum quantity of solid radwaste requiring final disposal; however, disposal of the resulting ammonium nitrate liquid waste is at present unclear.[97] Ammonia neutralization is not compatible with the Case 3 or Case 4 nitrate treatment systems.

If lime precipitation is used in conjunction with $BaCO_3$ treatment to remove 99.8% of the radium (the "high-impurity" feed option), the quantity of $CaSO_4 \cdot 2H_2O$ in the solid waste is less (1.0 MT/day) because more sulfate has been precipitated as $BaSO_4$. A total of 4.3 MT/day of radwaste solids is generated in Case 1 with 99.8% radium removal, compared with 4.0 MT for 99% radium removal.

There is uncertainty in these estimates of the radwaste sludges. In particular, the 400 kg of silica per day is based on 1959 data[127] and thus may be high. Other unidentified compounds may also be precipitated since UF_6 plants do not make a complete analysis of the feed.

Chemical requirements depend on (1) the amount of free nitric acid in the waste (which varies somewhat according to how difficult the yellow cake is to dissolve); (2) the amounts of aluminum, iron, and other hydrous oxides or hydroxides that are precipitated; and (3) the amount of ammonium salts. Ammonia is a weak base. In raising the pH to the range where the radwaste precipitates, some of the ammonium ions are converted to molecular ammonia as follows:

$$NH_4^+ + OH^- \rightleftharpoons NH_4OH \rightleftharpoons NH_3 + H_2O.$$

The ammonium salts thus consume base. With lime neutralization, there is a sufficient supply of calcium ions based on the hydroxide requirements to precipitate the insoluble calcium compounds. In the case studies, the ammonium concentration varies but the other parameters are held constant.

Chemical requirements to neutralize the model wastes (Tables 4.24 and 4.25) to a pH of 9 (pH of 8.4 for ammonia neutralization) and a 10% excess of $Ca(OH)_2$ or $Mg(OH)_2$ (0% excess for ammonia) are as follows:

Case 1	Compound used	Quantity (MT/day)
1	CaO	4.9
2	NH_3	2.8
3	CaO	4.6
4	MgO	3.8

The model waste is thought to be conservative (i.e., a little high) with regard to free acid and ammonium salt concentrations; therefore, chemical usage under plant conditions might be somewhat lower than these estimates. Case 3 requires slightly less lime than Case 1 because of the lower ammonium concentration (Table 4.25). In Cases 3 and 4, part of the CaO or MgO used in neutralization is recycled material that has been recovered from the nitrate solution. This reduces the amount of chemicals that must be purchased.

Radioactive materials. Estimates of the radioactive materials in the radwaste solids generated by treating solvent extraction wastes are presented in Table 4.11. These estimates are based on the model wastes described in Table 4.26, assuming that:

1. the uranium content of the liquid waste after neutralization is 0.003 g/ℓ (3 ppm),[60]
2. neutralization precipitates 90% of the radium[21] and 99.9% of the thorium (arbitrary choice; conservative when compared with the efficiency of removing thorium from uranium mill wastes[2]).

On a chemical basis, the estimated uranium content of the solid radwaste ranges from 0.18% in Case 1 for lime-precipitated waste to 0.5% in Case 2 for ammonia-precipitated waste. This is comparable to a uranium ore. The average ^{230}Th and ^{226}Ra concentrations in Case 1 radwaste for the "low-impurity" feed option (lime precipitation, 99% radium removal by $BaCO_3$ treatment) are 2.4×10^{-2} and 1.7×10^{-3} μCi/g respectively. By comparison, the average ^{230}Th and ^{226}Ra concentrations in mill tailings from a typical 0.2% uranium ore are 5.7×10^{-4} μCi/g each. On a per-gram basis, the sludges from treating the solvent extraction raffinate are potentially a little more hazardous than uranium mill tailings; however, there is a much smaller quantity of UF_6 plant wastes. With ammonia or magnesia precipitation there is less waste to dilute the activity, and the concentrations (μCi/g) of radioactive materials in the precipitated solids are about double those for Case 1. Estimates are also presented for the UF_6 plant feed containing "high levels" of ^{230}Th and ^{226}Ra. The ^{230}Th and

^{226}Ra concentrations in lime-neutralized sludges for this option, 1.1 x 10^{-1} and 1.2 x 10^{-2} μCi/g, respectively, will probably not be typical of UF_6 plant waste.

The estimates in Table 4.11 assess the long-term activity in the wastes after the ^{234}Th and ^{234m}Pa have decayed to secular equilibrium with the ^{238}U (i.e., a period of approximately 6 months).

4.4.11.4 SX Case 1 - precipitate the radwaste; release the liquid nitrate waste*

SX Case 1 system for treating solvent extraction wastes. The SX Case 1 system is shown schematically in Fig. 4.14; the flows are summarized in Table 4.28. Barium carbonate for 99% radium removal (99.8% with the "high-impurity" feed option) is added to the dissolver feed before extraction (Sect. 4.4.11.2). The raffinate waste (Stream 2R), which contains most of the radioactive materials, is treated before dilution with other wastes to maximize the removal of radioactive materials and toxic heavy metals. Aluminum sulfate is added to the waste when processing alkaline-leached yellow cake (15% of the feed), which is high in radium and low in sulfate. It is not necessary to add $Al_2(SO_4)_3$ when processing acid-leached feed which contains sulfate as an impurity. After coprecipitating $(Ba,Ra)SO_4$, the raffinate is neutralized with lime slurry, precipitating 4.0 MT of sludge per day consisting of $CaSO_4 \cdot 2H_2O$, $Al(OH)_3$, and a number of other compounds as well as most of the radioactive materials (Sect. 4.4.11.3). The radwaste slurry is held in the mixing tank for at least 2 hr to allow the gypsum ($CaSO_4 \cdot 2H_2O$) to precipitate and to minimize buildup of scale in the pipeline.[128,129] The neutralized raffinate slurry is pumped to the radwaste settling basin, where the solid radwaste settles and is impounded. The clear supernate, which is a dilute solution of $Ca(NO_3)_2$, NH_4NO_3, and $NaNO_3$ is mixed with other plant wastes and released. The Case 1 radwaste impoundment is a large pit with a working volume of 5.0 x 10^7 ℓ (13 million gal), which covers an area of 1.46 x 10^4 m^2 (3.6 acres). The estimated life is 30 years. When filled to

*SX Case 1 was developed for comparative purposes to examine a range of options. It does not represent current practice by the domestic industry, which is to impound the nitrate.[97]

capacity, the sludge covers an area of 1.33×10^4 m^2 (3.28 acres), as some liquid volume must be allowed for settling. The pit is constructed in accordance with Regulatory Guide 3.13, with a watertight synthetic liner to minimize seepage of liquids and water leaching of stored solids.[54] The radwaste impoundment has a liquid detention time of 60 days to ensure good solids settling and to allow ~80% of the ^{234}Th and ^{234m}Pa to decay. The surplus weak acid stream (Fig. 4.14, Stream 2S) is neutralized separately from the raffinate.

The estimated chemical compositions of the solvent extraction wastes (Fig. 4.14, Streams 2R, 2S, and 2T) are given in Table 4.24, the composition of the radwaste sludge generated by lime neutralization (Stream 4) in Table 4.27, and the compositions of the liquid wastes after lime treatment (Streams 5 and 7) in Table 4.29.

The treated raffinate (i.e., Stream 5, the clear supernate from the radwaste settling basin), the neutralized surplus weak acid (Stream 7), and the solvent treatment (Stream 2T) wastes are combined with fluoride scrubber liquors (Streams 4L, 7L, and 8K; Fig. 4.14 and Table 4.29). Some of the fluoride wastes are acidic and neutralize part of the base in the solvent extraction wastes, while the calcium ions in the treated raffinate precipitate most of the fluoride. The combined waste slurry is pumped to the fluoride settling basin, where the CaF_2 is impounded. The fluoride basin is also lined with a watertight synthetic liner. The clear supernate from the fluoride basin (Stream 9) is released to a surface stream.

SX Case 1, radioactive materials in the wastes. The radioactive materials in the radwaste sludges are estimated in Table 4.11 (discussion in Sect. 4.4.11.3); Table 4.29 gives the data for the other streams. The uranium content of the effluent from the fluoride settling basin is assumed to be 3 ppm, based on operating experience with a wet chemical pit at the DOE Fernald refinery.[60] It is assumed that there is no additional removal of radioactive materials from the lime-treated raffinate (Stream 5) due to the CaF_2 precipitation, however, there is decay of ^{234}Th and ^{234m}Pa while the wastewater is detained. A small amount of uranium is removed from the solvent treatment waste (Stream 2T) by CaF_2 precipitation. The liquid detention times in the radwaste basin and the fluoride basin are 60 and

14 days respectively. This permits ∿90% of the ^{234}Th and ^{234m}Pa to decay before the treated waste is released. Discussion of the radioactive materials in the fluoride stream is presented in Sect. 4.4.12.

SX Case 1, liquid nitrate effluent. The Case 1 effluent meets the standards given in 10 CFR 20, Appendix B, Table II for release of radioactive materials (Summary Table 4.9), but may not be acceptable chemically at all sites. It carries an estimated 14 MT of nitrate and 1 MT of ammonium salts per day, as well as calcium, sodium, and potassium ions. In order to meet the 40 CFR 141 drinking water standard, which stipulates a maximum NO_3^--N concentration* of 10 mg/ℓ,[130] the receiving stream should have a flow of at least 150 cfs (4 m^3/sec). The NH_4^+-N concentration** is 2.4 mg/ℓ after dilution by the 150-cfs stream. Depending on the pH of the receiving stream, this may be marginally toxic to fish.[123] If the receiving stream empties into a lake or reservoir where the aeration rate is low, the low level of nitrate in the 150-cfs stream may act as a nutrient and cause excessive biomass growth. For comparative purposes, doses are presented in Sect. 7 for a Case 1 release to a 15-cfs stream; however, the release would not be acceptable chemically at most sites. Releasing treated ammonium nitrate wastes to a 150-cfs stream is marginal chemically; its acceptability would depend on the characteristics of the receiving stream at a specific site. [SX Case 1 is developed for comparative purposes to examine a range of options. It does not represent the current practice in the domestic industry, which is to impound the nitrate.[97]]

SX Case 1, potential releases from the active radwaste impoundment. In Case 1, the radwaste impoundment is a potential source of radioactive materials in addition to the designed release of treated liquid waste. The solids contain uranium at levels comparable to that of a uranium ore, and ^{230}Th and ^{226}Ra at levels which are a little higher than the concentrations in typical mill tailings. Radon-222, a gas generated by the decay of ^{226}Ra, may diffuse out of the wastes (Sect. 4.4.15). The solids are

---

*NO_3^--N concentration is the concentration of nitrogen present in the form of nitrate ions (i.e., nitrate nitrogen).

**NH_4^+-N concentration is the concentration of nitrogen present in the form of ammonium ions (i.e., ammonium nitrogen).

potentially leachable since one-third of the waste is $CaSO_4 \cdot 2H_2O$, which has a small, but appreciable, solubility in water [2.1 g/ℓ as $CaSO_4$ in the temperature range 25 to 40°C (ref. 131)]. Small quantities of soluble radioactive materials are also contained in the liquid wastes that are held in the basin while the solids settle.

The Case 1 impoundment is constructed and maintained in accordance with Regulatory Guide 3.13.[54] This guide makes recommendations concerning (1) minimum safety factors in the design of the embankments, (2) stabilization to prevent erosion of the embankments, (3) control of any loose radioactive particulates to prevent wind resuspension of dusts, (4) an essentially watertight synthetic lining material to prevent seepage, (5) a seepage assessment system to detect any leaks, (6) protection of the site against water runoff from surrounding drainage areas, and (7) provision to stabilize the basin when manufacturing operations are terminated.

These measures should minimize the potential for releases from the impoundment other than the designed release of treated liquid waste to the stream and a small release of ^{222}Rn gas, which diffuses from the waste. For purposes of estimating the radon emanation, the area covered by radwaste sludges near the end of the 30-year life of the facility is estimated as 1.33×10^4 m^2 (3.28 acres).

SX Case 1, final disposal of solid radwastes. SX Case 1 does not address final disposal of the radwaste sludges, which is at present unclear.[97] Additional costs and/or releases of radioactive materials may be incurred in disposing of these wastes. The sludges may contain sufficient uranium to warrant recovery at some future time. Radwastes might be shipped wet to a uranium mill for processing, with final disposal of the ^{230}Th and ^{226}Ra in the mill tailings pile. This option would have minimal releases at the UF_6 plant. Sludges might be processed at the UF_6 plant for uranium recovery, which would generate liquid wastes. Wastes might be dried and drummed at the UF_6 plant for shipment off-site, which would generate airborne dusts. Even though the UF_6 plant impoundment is not expected to be the permanent repository for the radwaste sludges,[97] it would probably be technically possible to "stabilize" the sludges (i.e., cover them with earth) on-site. These wastes will require special

handling because of their ^{230}Th and ^{226}Ra contents. There will be (1) a long-term ^{222}Rn release, (2) a potential for underground migration of radioactive materials via seepage or leaching if the integrity of the container or liner should fail, and (3) a potential for windblown dusts if the cover should erode. It is beyond the scope of this survey to assess these potential impacts of the burial ground.

4.4.11.5 SX Case 2 - precipitate the radwaste; impound the liquid nitrate waste

SX Case 2, liquid nitrate waste treatment system. The Case 2 system is shown schematically in Fig. 4.15. The three waste streams — raffinate (Stream 2R), solvent treatment waste (Stream 2T), and surplus weak acid (Stream 2S) — are combined and neutralized to a pH of 8.4 with 2.8 MT of ammonia per day to precipitate most of the radioactive materials, along with $Al(OH)_3$ and $Fe(OH)_3$. Barium carbonate treatment is not applied in Case 2. The radwaste slurry is pumped to a series of lined lagoons, where the liquid nitrate solution and radwaste sludges are impounded together. Natural evaporation is used to dispose of part of the water.

The composition and flows to the waste treatment system are the same as in Case 1 (Tables 4.24 and 4.26). The Case 2 ammonia neutralization generates 1.4 MT of sludge per day, which is only about one-half the amount generated by the Case 1 lime neutralization (Table 4.27, Sect. 4.4.11.3). The amount generated by the Case 2 system is lower because most ammonium salts such as $(NH_4)_2SO_4$ are soluble, whereas many calcium compounds have a low solubility. An estimated 1.6×10^5 ℓ of liquid waste carrying 14 MT of nitrate, 4 MT of ammonium, 1 MT of sodium, and 1 MT of sulfate ions is impounded in the lagoons on a daily basis.

Two models for the Case 2 lagoon system are considered — one for a midwestern site with an annual evaporation rate for pure water of 42.7 cm (16.8 in.), and the other for a New Mexico site with an evaporation rate of 2.2 m (7.25 ft). The estimated life (i.e., filled to capacity) is 15 years. The lagoon system at the midwestern site is designed to concentrate the nitrate waste to 400 g/ℓ (∿30% of the original volume). The midwestern lagoons have a working capacity of 3.0×10^8 ℓ (78 million gal) and cover an area of 9.2×10^4 m^2 (22.8 acres). Waste heat from the

condenser on the $UO_2(NO_3)_2$ evaporator is used to raise the temperature of the pond water, thereby increasing the rate of evaporation. Wastewater from the lagoons is pumped to the plant for use as cooling water in the condenser and then returned to the pond. The system is enclosed, and there are no effluents. At the arid New Mexico site, the lagoon system is designed to concentrate the wastes to 600 g/ℓ (∿20% of the original volume). The New Mexico lagoons have a total working volume of 1.8×10^8 ℓ (48 million gal) and cover an area of 5.6×10^4 m^2 (13.8 acres). There is no waste heat evaporator in the New Mexico model where the climate is arid. The lagoons are lined with a watertight synthetic liner to prevent seepage.

Ammonium nitrate, a compound that is hygroscopic and extremely soluble in water,[58,132] is a major constituent of the liquid waste (Table 4.30). Therefore, it seems unlikely that the nitrate brine which accumulates in the lagoons will evaporate to dryness.

SX Case 2, radioactive materials in the wastes. Estimates of the quantity of radioactive materials in the impounded solids are given in Table 4.11; the amounts dissolved in the impounded nitrate solution are listed in Table 4.30. No data were available, and there is uncertainty in these estimates. It is assumed that the uranium content of the solution is 3 ppm after ammonia neutralization, and that neutralization precipitates 99.9% of the ^{230}Th and 90% of the ^{226}Ra. This may be optimistic for ^{226}Ra since the mechanism for radium removal is expected to be primarily sorption on the gelatinous $Fe(OH)_3$ and $Al(OH)_3$, rather than the formation of an insoluble radium compound (Sect. 4.3.2.4). The radium concentration in the Case 2 waste after neutralization is about 100 times higher than in Case 1 because no $BaCO_3$ treatment is applied. The concentrations (in μCi/ml) given in Table 4.30 are for the liquid in the lagoons after the soluble salt content of the waste has been concentrated, via evaporation, to 400 g/ℓ at the midwestern site or to 600 g/ℓ at the New Mexico site. These estimates assume that no additional radioactive materials precipitate as the water evaporates.

SX Case 2, potential releases from the active nitrate impoundment. The lagoons near the UF_6 plant where the liquid nitrate wastes and

associated sludges are impounded represent a potential source of radioactive materials. The nitrate solution contains soluble radioactive materials, while the solids contain uranium at levels comparable to a high-grade ore and ^{230}Th and ^{226}Ra at levels for the "low-impurity" feed option which are, respectively, 100 and 7 times higher than the levels in typical mill tailings from a 0.2% U_3O_8 ore (Table 4.11). Nitrate is a mobile ion in the environment. Natural barriers such as clay offer less protection for nitrate wastes[21] than for the sulfate wastes generated by uranium mills.

The study assumes that the lagoons construction meets the requirements of Regulatory Guide 3.13[54] to minimize the potential for releases from the impoundment. The lagoons are lined with an essentially watertight, synthetic liner to prevent seepage of liquid nitrate wastes carrying soluble radioactive materials. Additional protection is provided by a seepage assessment system. The embankments are constructed and maintained in a manner which minimizes the risk of accidental dike failure. The lagoon system has sufficient capacity that wastes can be pumped to the other lagoons if the integrity of one should fail. Most of the radioactive solids will be covered with liquid at all times. Loose solids, which may result from fluctuating water levels, are sluiced into the pond, or some other dust control measure is applied to prevent wind-blown dust releases from the impoundment.

However, a small amount of ^{222}Rn gas will be released from the decay of ^{226}Ra in the stored wastes; there will also be a chemical release of NH_3. In estimating the radon release in Sect. 4.4.15, it is assumed that the sludges are confined to the first lagoon, which serves as a settling basin (i.e., they are not spread over the entire area). When wastewater containing NH_3-N* at high pH is held in holding ponds, some of the ammonia is air stripped from the wastewater.[133] The extent to which this may occur for the model Case 2 lagoons is not known. The estimate of 460 kg of ammonia released per day in Table 4.7 represents a probable upper limit if essentially all the ammonia used to increase the pH to 8.4 were volatilized, leaving only ammonium nitrate salts in the lagoon.

---

*NH_3-N is nitrogen present as ammonia (i.e., ammonia nitrogen).

SX Case 2, final disposal of impounded wastes. SX Case 2 is not directly comparable to the other case studies because it does not address the final disposal of the liquid nitrate wastes and radwaste sludges that accumulate in the lagoons. Impoundment is an interim measure, pending development of an acceptable permanent disposal method.[97] Is is the only alternative to releasing the nitrate which is fully developed and available for immediate industrial use. Additional costs and/or releases of radioactive materials and/or chemicals may be incurred in disposing of these wastes. It seems unlikely that the nitrate brine will evaporate to dryness after the lagoons become inactive. Unless the liquid nitrate waste is eventually treated to recover or destroy the nitrate, there will be a long-term potential for a liquid nitrate release via dike failure or seepage if the integrity of the liner should fail. Case 2 assumes that an acceptable disposal method for the nitrate will be found. Possible disposal methods for the radwaste sludges are discussed in SX Case 1.

4.4.11.6 SX Case 3 - precipitate and dry the radwaste; biological nitrification/denitrification; release purified wastewater

SX Case 3 system for treating solvent extraction wastes. A simplified flow diagram for SX Case 3 is presented in Fig. 4.16. Part of the yellow cake feed is calcined to decompose $(NH_4)_2U_2O_7$ to UO_3 and NH_3 gas. This reduces both the ammonium and the nitrate salt loads to the biological system (nitrification converts NH_4^+ to NO_3^-), as well as providing a more uniform feed. Barium carbonate treatment for radium removal is applied. The raffinate is then treated with lime slurry to precipitate the radwaste and to remove heavy metals which may be toxic to the bacteria.[69] The radwaste solids are dried and drummed ready for shipment off-site. The lime-treated raffinate, the solvent treatment waste, and the surplus weak acids are combined and diluted with nine parts of recycled effluent from the biological system. Dilution is necessary because the bacteria cannot function in concentrated salt solution. The bicarbonate in the recycle stream removes the calcium ions from the lime treatment as $CaCO_3$. After settling, the clarified wastewater is principally a mixture of $NaNO_3$, NH_4NO_3, and $NaHCO_3$. Biofeed preparation also includes adjustment of the pH. The wastewater is then treated in the nitrification reactor where bacteria oxidize

the NH_4^+ to NO_3^-, and in the denitrification reactor where bacteria reduce the NO_3^- to N_2 gas. Air must be supplied to nitrification, and methanol to denitrification. Denitrification takes place only in the absence of oxygen since the bacteria will use oxygen in preference to nitrate if both are present. About 90% of the effluent from the bioreactors is recycled to dilute incoming feed, while 10% is released to surface streams. The effluent released to a surface stream carries about 4 MT of $NaHCO_3$ (baking soda) per day, along with an estimated 10 mg of NO_3^--N and 2 mg of NH_4^+-N per liter. The release of radioactive materials is similar to that in Case 1. After dilution by the 15-cfs (0.4 - m^3/sec) stream, the $NaHCO_3$ concentration is below the taste threshold. If desired, it could be reduced even further by restricting sodium salts in the yellow cake feed. On a daily basis, the system generates an estimated 7.2 MT of $CaCO_3$, which is calcined to recover lime for recycle, and 1.4 MT of biomass, which is incinerated.

The Case 3 biological system has been adapted from conventional (plug-flow) activated sludge systems under development for nitrifying and de-nitrifying municipal sewage. Sewage differs from UF_6 plant wastes in that it is much more dilute in ammonium and nitrate ions, contains biologically oxidizable organics even after treatment for biological oxygen demand (BOD) removal, and has considerable buffering capacity. There is uncertainty about the Case 3 biological treatment system. It has not been demonstrated experimentally on uranium refinery wastes and would require research and development before industrial application.

The system is described in more detail in the following paragraphs and in Figs. 4.17-4.19; flows are given in Tables 4.31-4.34.

Feed calciner. The ammonium salt in the feed to digestion is limited to the minimum needed for salting strength during solvent extraction.[21] It is desirable to have a uniform ammonium load to waste treatment because the nitrifiers are slow-growing and do not adapt quickly to fluctuations in the feed. The minimum ammonium content required for solvent extraction corresponds to ∿25% of the yellow cake feed. Another 15% of the model feed is $Na_2U_2O_7$, which also goes directly to digestion. The remaining 60% (Fig. 4.17, Stream 2), which is assumed in the model to be steam-dried ammonium diuranate [a 1:1 mixture of $(NH_4)_2U_2O_7$ and UO_3], is calcined under

controlled conditions between 370 and 400°C to volatilize the ammonia (680 kg/day) and convert the uranium to UO_3. This drives off most, but not all, of the nitrogen.[85] Calcination above 400°C should be avoided since the UO_3 will begin to decompose to U_3O_8, which is difficult to dissolve in nitric acid.

On a daily basis, calcining part of the feed reduces the ammonium load to waste treatment from 1.1 MT to 0.4 MT, and the nitrate from 14.1 MT to 11.6 MT.

The off-gas from the calciner (Fig. 4.17 or Fig. 4.5, Stream 2c) carries entrained dust, which is recovered by primary and secondary bag filters. The dust release was estimated by analogy to yellow cake losses from the dryer at uranium mills. The feed calciner is the reason that the release of crude yellow cake dusts from materials handling is higher in Case 3 than in Case 2 (Tables 4.6c, 4.6b, and 4.13). The estimated ammonia release to the atmosphere is 680 kg/day. Airborne ammonia releases are not of concern, providing that the vent is not immediately adjacent to a source of SO_2 (or HF, in this case), which might react with the ammonia to form an aerosol.[86]

<u>SX Case 3 - radwaste-chemwaste precipitation</u>. Radium is removed by treatment with $BaCO_3$, and lime neutralization is used to precipitate heavy metals which may be toxic or inhibit the bacteria,[69] some chemicals such as $CaSO_4 \cdot 2H_2O$, and any radioactive materials. The removal of chemicals and preparation of a relatively uniform feed may be of greater importance than the removal of radioactive materials. This is because the bacteria function best when they can become acclimatized to one feed. Shifts to a different salt sometimes result in reduced biological activity until a new population adapted to the new feed can develop. The bacteria per se will remove uranium;[134,135] however, their effect on radium and thorium is not known. It is possible that the bacteria might remove these also.

The radwaste precipitation system has been described previously in SX Case 1 and Sects. 4.4.11.2-4.4.11.4. Because the ammonium concentration is lower, the solution is less buffered and slightly less $Ca(OH)_2$ is required than in Case 1 (5.5 vs 6.1 MT/day). Approximately 75% of the lime is recycle material.

SX Case 3 - radwaste drying and packaging. In Case 3 the radwaste sludges are centrifuged, washed on the centrifuge, reslurried, and spray dried at about 280°C (Fig. 4.17, Table 4.31, and Sect. 4.4.3). The dry solids are finally packaged in drums ready for shipment off-site to a licensed burial ground or possibly to a mill for recovery of the uranium. An estimated 3.9 MT/day as dry solids is handled. The chemical compositions of the radwaste and the radioactive materials are given in Tables 4.27 and 4.11 respectively.

Both the off-gas from the spray dryer and the air used to control dust during packaging are passed through primary and secondary bag filters before being released to the atmosphere. In the absence of data on the quantity of airborne dust generated by this type of operation, the source terms for Stream 10A (Fig. 4.17, and Tables 4.6c and 4.14) were estimated by analogy to dusts generated by an autogenous air grinding and drying circuit and to yellow cake packaging at a uranium mill.

Biofeed preparation (calcium carbonate precipitation). Biofeed preparation has several functions: (1) to dilute the feed to the range where the bacteria can function, (2) to precipitate calcium ions which might create problems in the biological system, and (3) to adjust the pH. The biofeed preparation system is shown in Fig. 4.17; the flows are given in Table 4.31.

Nitrate concentrations greater than 6 to 7 g/ℓ (1.4 to 1.6 g of NO_3^--N per liter) significantly inhibit the rate of denitration.[136,137] Since the combined solvent extraction wastes [i.e., the lime-treated raffinate (Fig. 4.17, Stream 12), surplus weak acid (Stream 2S), and solvent treatment waste (Stream 2T)] contain an estimated 66 g of NO_3^-/ℓ (15 g of NO_3^--N per liter), the waste is diluted with nine parts of recycle effluent from the biosystem (Stream 13). In the limited studies completed to date, this appears to be about the upper limit of recycle which can be tolerated without substances in the recycle inhibiting denitration.[72] Dilution of the feed is also a necessary prerequisite to nitrification because both molecular ammonia and nitrous acid (a possible intermediate) inhibit the reactions. The boundary conditions form a triangular-shaped zone relating NH_4^+-N and pH. The apex, or upper limit, is ∿250 to 500 mg of NH_4^+-N

per liter for the zone where the Nitrobacter and the Nitrosomonas bacteria can function together to achieve nitrification.[138,139] The pH must be held within narrow limits at NH_3-N concentrations above 50 to 100 mg/ℓ. After dilution with recycle effluent, the model feed contains 180 mg of NH_4^+-N per liter. This is probably about the upper limit that is practical under field conditions.

Lime neutralization is the most effective method for removing toxic heavy metals from the feed. Calcium ions are compatible biologically; however, they may create difficulties in the bioreactors due to the precipitation of $CaCO_3$, such as problems associated with the plugging of air diffusers in the nitrification tanks, scaling of tanks, and solids removal. Precipitated $CaCO_3$ might also displace biomass in the suspended floc, thereby reducing the capacity of the bioreactors. Most of the calcium ions can be precipitated as $CaCO_3$ during biofeed preparation by reaction with the bicarbonate ions in the recycle stream used to dilute the feed:

$$Ca^{2+} + 2HCO_3^- \longrightarrow CaCO_3(s) + H_2O + CO_2(g).$$

The bicarbonate ions also neutralize excess free acid from the surplus weak acid stream:

$$H^+ + HCO_3^- \longrightarrow H_2O + CO_2(g).$$

The waste streams (Fig. 4.17, Streams 12, 2S, and 2T) and the recycle $NaHCO_3$ solution (Stream 13) are mixed and then treated in the preaeration tank where mild air agitation removes CO_2 from the solution and promotes flocculation. An estimated 2.5 MT of CO_2 is released per day. Ferric chloride, at 5 mg of Fe/ℓ (26 kg of $FeCl_3$/day), is added as a coagulant. About 600 kg of $CaCO_3$/day is recycled as a 6 wt % slurry (Stream 15) to provide seed crystals and to promote flocculation. A second tank (or compartment) is used to adjust the pH to 7.5 with $Ca(OH)_2$ slurry, and the wastewater is clarified. The overflow is the feed to the biological system (Stream 26). Chemically, it is a solution primarily composed of NH_4NO_3, $NaNO_3$, and $NaHCO_3$; however, it also contains suspended $CaCO_3$ at

an estimated concentration of 0.2 g/ℓ, some potassium salts, a small amount of sulfate which was not removed during radwaste-chemwaste precipitation, and sulfate from the solvent treatment waste. The precipitated $CaCO_3$ is withdrawn from the clarifier as a 6 wt % solids slurry (Stream 21). About 8% is recycled to promote flocculation (Stream 15). The remainder is centrifuged, yielding a cake containing 7.2 MT/day of $CaCO_3$ with about 35 wt % residual moisture (Stream 23). The $CaCO_3$ is washed on the centrifuge to remove nitrate salts and is then calcined to recover lime for recycle (to be discussed later). The centrate (Stream 24) is treated by the biosystem. The $CaCO_3$ removal system was adapted from somewhat related systems that have been tested for possible use at sewage treatment plants.[96,140-142]

Biological nitrification. The Case 3 model plant uses a suspended-growth (activated-sludge) bioreactor to oxidize the ammonium (and nitrite) to nitrate.* The essential features are shown in Fig. 4.18. The waste is pumped to an aeration tank, where aerobic bacterial flora oxidize part of the ammonium ion to nitrate and the organic carbon to CO_2; another part is synthesized into bacterial substance. The bacterial flora grow in the form of a floc (the activated sludge) which is suspended in the liquor. The mixture of treated wastewater and sludge is then allowed to settle, and the effluent (free from sludge) is discharged to nitrification. The sludge is returned to the aeration tank to be used in the treatment process again. Since the bacteria increase in number, surplus sludge is removed periodically.

The feed to the bioreactor (Fig. 4.18, Stream 26) is a dilute solution of NH_4NO_3, $NaNO_3$, and $NaHCO_3$ containing about 180 mg of NH_4^+-N per liter. It has been treated to precipitate heavy metals, which are toxic to the bacteria, and to remove other chemicals as well as the radioactive materials (Fig. 4.17). The pH has been adjusted to 7.5. Trace nutrients such

*Suspended-growth reactors were selected for the model because there has been more experience with this type of reactor. The model feed is also suitable for a fluidized-bed reactor, and the biochemical reactions would be similar; however, the material flows would be different.

as phosphate, magnesium, and others are added to promote growth* (Table 4.32).[136,137]

For purposes of the assessment the biochemical reactions, including synthesis, are assumed to be:[68]

$$55\ NH_4^+ + 76\ O_2 + 109\ HCO_3^- \xrightarrow[\text{Nitrosomonas}]{} C_5H_7NO_2 + 54\ NO_2^- + 57\ H_2O + 104\ H_2CO_3\ ,$$

$$400\ NO_2^- + NH_4^+ + 4\ H_2CO_3 + HCO_3^- + 195\ O_2 \xrightarrow[\text{Nitrobacter}]{} C_5H_7NO_2 + 3\ H_2O + 400\ NO_3^-;$$

and the overall reaction is

$$NH_4^+ + 1.83\ O_2 + 1.98\ HCO_3^- \longrightarrow 0.021\ C_5H_7NO_2 + 1.041\ H_2O + 0.98\ NO_3^- + 1.88\ H_2CO_3.$$

The maximum growth rate of the Nitrobacter is considerably higher than the maximum growth rate of the Nitrosomonas. Under steady-state conditions, nitrite does not accumulate in the reactor. The kinetics are proportional to the microbial concentration and zero order with respect to NH_4^+-N down to 1 to 3 mg/ℓ.[143-145] The reaction is sensitive both to pH, with 7 to 8 being the optimum range, and to temperature.[68,144]

In the model, the recycled effluent from denitration (Figs. 4.17 and 4.18, Stream 13) contains an excess of bicarbonate with respect to $CaCO_3$ precipitation and nitrification. Aeration supplies the oxygen and strips CO_2 from the solution, thus removing the carbonic acid.**

The biofeed also contains small quantities of organics which are oxidized to CO_2 by heterotrophic bacteria under the same conditions as nitrification takes place. The model assumes that the raffinate and the

---

*It is possible that some of the trace nutrients may be naturally present in the feed.

**The rate of nitrification decreases significantly below a pH of 7. It is often necessary to add base to neutralize the acid if the nitrification system does not have an air sparge (e.g., uses pure oxygen or the rotating biological disk method).

solvent treatment wastes (Fig. 4.17, Streams 2R and 2S) contain TBP at a concentration of 0.16 g/ℓ[146] and that it is biodegradable. The reactions are assumed to be:

$$(n\text{-}C_4H_9O)_3PO + 3H_2O \longrightarrow 3n\text{-}C_4H_9OH + H_3PO_4 \ ,$$

$$C_4H_9OH + 4.93\ O_2 + 0.22\ NH_4^+ + 0.22\ HCO_3^- \longrightarrow 0.22\ \underset{\text{biomass}}{C_5H_7O_2N} + 3.12\ CO_2 + 4.78\ H_2O\ .$$

The model also assumes that the recycle $NaHCO_3$ solution used to dilute the feed (Fig. 4.17 or 4.18, Stream 13) contains 20 mg of organic carbon per liter, of which 7 mg/ℓ is present as colloidal biomass that is refractory and not biodegradable during nitrification, and 13 mg/ℓ is present as excess methanol from denitration (to be discussed later). The methanol is biodegradable during nitrification:

$$CH_3OH + 1.23\ O_2 + 0.055\ NH_4^+ + 0.055HCO_3^- \longrightarrow 0.055\ \underset{\text{biomass}}{C_5H_7O_2N} + 0.78\ CO_2 + 1.95\ H_2O\ .$$

The behavior of TBP in the system is speculative. The behavior of the organic carbon in the recycle Stream 13 (Fig. 4.18) is estimated by analogy to activated-sludge sewage treatment followed by nitrification.[143] Biomass yields for the organic carbon oxidation are estimated for a sludge age of 20 days (the ratio of the quantity of biomass in the reactor to the quantity wasted per day) by extrapolation from the biomass-yield-vs-sludge-age data of Sherrard and Schroeder.[147] Since the heterotrophic bacteria grow about ten times faster than the nitrifiers, the amount of biologically oxidizable carbon is an important consideration in the design of the system.

Estimated parameters for nitrification of the model feed at a pH of 7 to 8 and a reaction temperature of 20°C are:

1. sludge retention time (mean cell residence time in the reactor, ratio of biomass in the reactor to biomass wasted per day): 20 days;[141]

2. rate of nitrification: 0.7 g of NH_4^+-N oxidized per liter of reactor per day;
3. MLTSS (mixed-liquor total suspended solids): ∿3000 mg/ℓ;[141]
4. MLVSS (mixed-liquor volatile suspended solids, i.e., active biomass): 50 to 60% of the MLTSS under field conditions;[143]
5. working volume: 4.6×10^5 ℓ (1.22×10^5 gal; 1.62×10^4 ft^3);
6. hydraulic detention time: 5.3 hr.

The rate of nitrification is estimated by assuming that (1) 65% of the biomass is Nitrosomonas (the rate-limiting parameter; calculated for the model feed from the biochemical reactions), (2) a MLTSS of 3000 mg/ℓ (2.0 g/ℓ of Nitrosomonas active and dead), (3) an NH_4^+-N oxidation rate in the laboratory of ∿1.4 mg per g of pure Nitrosomonas at 20°C and a pH of 7 to 8,[144] and (4) a rate in the field which is half that in the laboratory because a refractory bacterial population accumulates with time.[148] There is uncertainty in this estimate.

The nitrification rates at 15 and 25°C are, respectively, ∿0.6 and 1.5 times the rate at 20°C.[68] Some heat is generated by the biochemical reactions. During cold weather this may not be sufficient and waste heat from the UF_6 plant might have to be used to warm the reactor and/or part of the waste might have to be impounded and processed later during warm weather.

Nitrifying bacteria are slow-growing and lose their activity rather quickly when the substrate is exhausted. For example, it has been reported that starved Nitrobacter lose 50% of their activity in 2 days under aerobic conditions.[69] Therefore, nitrification will not adjust quickly to fluctuations in the NH_4^+ load. The model plant has surge capacity (holding ponds) to operate the biological system continuously at a relatively constant ammonium load.

Flows for the nitrification system are presented in Table 4.33, and the codes are shown in Fig. 4.18. On a daily basis, the liquid flow to nitrification is 1.8×10^6 ℓ (4.7×10^5 gal), 440 kg of trace nutrients are added, and 6 MT of biomass is recycled at 2 wt % solids in the sludge. Calculated air requirements are 44 sm^3/min (1540 cfm). Blowers for sewage

treatment plants are usually sized at least 150%, and sometimes 200%, of the calculated requirements with provision to throttle back and/or take out of service.[149] Air filters are needed to prevent dust from clogging the diffusers. About 1.6 MT of CO_2 is released to the atmosphere. An estimated 60 kg of waste biomass is withdrawn from the system, while the clarified effluent (which is the denitrification feed) contains 20 kg of colloidal biomass. It may be possible to waste all the surplus biomass to the denitrification system.

Biological denitrification. Case 3 uses an activated sludge-type system to denitrify the nitrate to nitrogen gas. The effluent from nitrification, which is the feed to denitrification, contains about 1.7 g of NO_3^--N per liter. Air must be excluded since the denitrifying bacteria will use oxygen in preference to nitrate if both are present. An organic carbon source must be supplied. Methanol is preferred for economy; however, other nutrients can be used. Methanol requirements, biomass production, and N_2 off-gas for the model waste treatment facility are estimated from the following equation:

$$NO_3^- + 1.08\ CH_3OH + 0.24\ H_2CO_3 \longrightarrow \underset{\text{biomass}}{0.056\ C_5H_7NO_2} + 0.47\ N_2 + 1.68\ H_2O + HCO_3^- .$$

The equation predicts that the solution might become too basic (pH > 8), but this problem has not been encountered in practice.[72]

Estimated parameters for denitration of the model feed at a pH of 7 to 8 and a reactor temperature of 20°C are:

1. sludge retention time: 15 to 17 days;
2. rate of denitrification: 0.2 g of NO_3^--N per liter of reactor per day;
3. MLTSS: ∿3000 mg/ℓ;
4. MLVSS: 1880 mg/ℓ (∿63% of the MLTSS);
5. working volume: 7.8×10^6 ℓ (2.1×10^6 gal, 2.8×10^5 ft^3);
6. hydraulic detention time: 4.4 days.

The denitrification rates were estimated from field tests with municipal sewage by Horstkotte et al.[141] and Heidman et al.[143] The temperature dependence of denitrification is similar to that of nitrification.[68] The growth rate of denitrifiers is about one-third that of heterotrophic bacteria and three times that of nitrifiers. The denitrification reactor will be more flexible than the nitrification reactor in adjusting to fluctuations in the feed, but less flexible than a sewage treatment plant.

Flows for the denitrification system are given in Table 4.33; codes are shown in Fig. 4.18. On a daily basis, 7.3 MT of methanol is added (including 40 mg of organic carbon per liter excess), 4.6 MT of biomass is recycled as 2% solids sludge, 1.4 MT of surplus biomass is removed from the system as waste, and 2.8 MT of N_2 is released to the atmosphere.

After denitration, the mixed liquor containing the biomass is stabilized (aerated).[141,143] This improves the handling properties of the sludge, oxidizes most of the excess methanol, and aerates the liquid so that the dissolved oxygen content of the effluent will be acceptable. This is followed by mild aeration in a physical conditioning channel, which helps to flocculate the sludge. The mixture is then settled. Part of the biomass is recycled to be used in the treatment process again; the surplus, which is waste, is dewatered and incinerated (Fig. 4.19). There are reports that the sludge yield with this type of system is only about one-fourth that predicted.[141] If this is true, it would significantly reduce the quantity of biomass requiring disposal.

About 90% of the clarifier overflow is recycled to dilute incoming waste (Fig. 4.17 or 4.18, Stream 13). In this model the carbon product of denitration is HCO_3^-, which is recycled to biofeed preparation and is then removed from the system either as $CaCO_3$ or as CO_2 during biofeed preparation.

SX Case 3 liquid effluent. The other 10% of the clarifier overflow is passed through a sand filter to remove small amounts of biomass, and the purified wastewater is released to a surface stream. The NO_3^--N concentration of the UF_6 plant effluent is estimated as 10 mg/ℓ and the NH_4^+-N as 2 mg/ℓ. The wastewater carries about 4 MT of $NaHCO_3$ (baking

soda) per day, as well as small amounts of potassium and sulfate salts (Table 4.10). After dilution by the 15-cfs (0.4-m^3/sec) stream, the salt concentration is 120 mg/ℓ, which is a factor of 10 below the taste threshold.[150] The $NaHCO_3$ release could be reduced by a factor of 2 by restricting sodium salts in the feed if desired; however, some sodium salt is necessary in the model because the bioreactors are not designed for a $Ca(NO_3)_2$ biofeed where $CaCO_3$ precipitates in the biosystem.

The treated wastewater carries small quantities of radioactive materials (Table 4.9). The source terms are similar to those in Case 1. The removal efficiencies for $BaCO_3$ treatment and radwaste precipitation are the same as in Case 1. The $CaCO_3$ precipitation and/or biomass remove a small amount of uranium from the solvent treatment waste; the effluent is assumed to contain 3 ppm uranium. The $CaCO_3$ treatment and biomass are conservatively assumed to effect no (zero) removal of thorium and radium other than the decay of ^{234}Th due to holdup in the system.* The source terms for ^{234}Th and associated ^{234m}Pa are estimated for a mean hydraulic residence time of 24 days when operated in the 90% water recycle mode. This would permit 50% of the ^{234}Th and associated ^{234m}Pa to decay in the waste treatment system.

Lime recovery. The $CaCO_3$ generated during biofeed preparation is calcined at 925°C in a multiple-hearth furnace (Fig. 4.19, Sect. 4.3.3.4). The primary purpose is to eliminate the need to dispose of 7.2 MT of solid chemwaste per day. The wet cake is dried in the upper portion of the furnace by the exhaust gases and calcined in the middle portion; the ash is used to preheat the fuel and air. The ash, composed of ∿95% CaO and 5% $CaCO_3$,[141] is slaked and recycled to waste treatment. In SX Case 3, about 75% of the lime requirements are met with recycle lime and 25% with makeup lime. The off-gas carries ∿15% of the solids as entrained dust,[141] containing principally dried $CaCO_3$ from the upper hearths. Approximately 10% is recovered by a cyclone and recycled to the furnace, while most of the remaining 5% is collected by a venturi scrubber. Scrub liquor is recycled to biofeed preparation. The $CaCO_3$ cake is washed in the centrifuge

*There is a possibility that bacteria may remove other heavy metals besides uranium.

to minimize the quantity of sorbed nitrate salts introduced into the furnace. The off-gas carries an estimated 24 kg/day of NO_x, HNO_3, and HNO_2 (calculated as NO_2) from the thermal decomposition of nitrate salts. Some of this may be collected by the scrubber. A bag filter is also available to clean dust-laden air generated in handling the lime. Flows are given in Table 4.34 for the codes shown in Fig. 4.19.

The feed to the furnace is expected to be a chemical waste containing levels of activity barely distinguishable above the natural background of the lime. Airborne releases of radioactive materials from the incinerator are expected to be negligible relative to the other releases from the UF_6 plant. Radioactive materials are not expected to concentrate in the lime because insolubles are removed during radwaste precipitation and the liquid effluent serves as a bleed for soluble species. At worst, if all the radioactive materials that enter the biofeed preparation system were removed by either $CaCO_3$ precipitation or the biomass, the source terms for the incinerator and lime handling using the off-gas treatment shown in Fig. 4.19 would be 2 to 3% of the total releases. It is most unlikely that all the solubles entering biofeed preparation would pass through the incinerator.

The system is conservatively designed (i.e., high with respect to costs) to calcine all the $CaCO_3$. It may be possible to recycle up to two-thirds of the $CaCO_3$ directly (i.e., without calcining) to radwaste precipitation to neutralize the free HNO_3 in the raffinate. This would probably require a two-step neutralization: first with $CaCO_3$, and then with $Ca(OH)_2$. There is uncertainty about the rate (and therefore the feasibility) of reacting $CaCO_3$ with dilute nitric acid in a system where gypsum and other calcium compounds are precipitating.

Biomass incineration. Incineration is used to dispose of the 1.4 MT of waste biomass produced daily (Fig. 4.19).[95,151] Typical activated sewage sludge, which is composed of ∿2% solids and 98% water, must first be dewatered.[152] The normal procedure for dewatering is to condition with 15% CaO and 5% $FeCl_3$ on a dry sludge solids basis, followed by filtration.[151] The material is difficult to filter, and the cake has a high water content. The model is based on 21.5% solids — 78.5% water.[151]

The biomass contains some fuel value, but not enough for autogenous combustion. This assessment estimated the amount of auxiliary fuel required at 1.40 x 10^6 kg-cal/MT dry solids [dry biomass plus $CaCO_3$ and $Fe(OH)_3$]; however, the value is very sensitive to the quantity of conditioning chemicals and the moisture content of the cake. The filtrate is processed through the treatment system since it may contain organic compounds.

The waste biomass can be incinerated in the same multiple-hearth furnace as the lime.[141] The ash will be principally CaO that is slaked and recycled. The biomass contains a small amount of nitrogen, which presumably will be oxidized to some form of NO_x. An estimated 590 kg/day, calculated as NO_2, is released.

Flows are given in Table 4.34 for the codes shown in Fig. 4.19.

4.4.11.7 SX Case 4 - precipitate the radwaste and incorporate it in cement; recover nitric acid, ammonia, and water

SX Case 4 system for treating solvent extraction wastes. A simplified flow diagram for SX Case 4 is presented in Fig. 4.20 for a low-sodium yellow cake feed based on magnesia as a carrier to recover the nitrate by thermal denitration (calcining). Barium carbonate treatment for radium removal is applied. The raffinate is then neutralized with magnesia to precipitate most of the radioactive materials, together with the hydroxides or oxides of aluminum and heavy metals. Magnesia is used in preference to lime because it decomposes at a lower temperature [430 to 455°C for $Mg(NO_3)_2$ vs 612 to 645°C for $Ca(NO_3)_2$][75,76] and generates less solid radwaste requiring final disposal. The radwaste solids are cemented to provide additional protection and drummed for shipment to an approved repository.

After removal of the radioactive materials, the liquid waste is treated with a stoichiometric amount of lime to precipitate the sulfate and fluoride, which are corrosive in the calciner. This step is combined with ammonia removal by adding additional magnesia and heating to volatilize the ammonia along with a fraction of the water. Ammonia is recovered from the off-gas as a 28 wt % aqueous solution suitable for off-site

industrial use, while the $CaSO_4 \cdot 2H_2O$ (gypsum) chemwaste solids are impounded in a lined pit near the plant. The $Mg(NO_3)_2$ waste solution serves as the feed to the nitric acid recovery system. Wastes from solvent treatment and weak acid wastes, such as evaporator overheads, which contain relatively low levels of radioactive materials and chemicals are treated separately from the raffinate to avoid dilution of the ammonia recovery stream.

The nitrate values are recovered by boiling down to the approximate composition of $Mg(NO_3)_2 \cdot 6H_2O$ and then denitrating (calcining) the molten salt in equipment similar to that used to denitrate $UO_2(NO_3)_2 \cdot 6H_2O$ (Sect. 4.4.5.7). Nitric acid is recovered from the off-gas for recycle to digestion (Sect. 4.4.5.1), and the MgO calcine is reused in waste treatment. The chloride impurity (which enters the UF_6 plant in the yellow cake feed) volatilizes with the NO_x during calcining and is very corrosive. An ozone-air sparge is used for oxidizing the chloride to chlorine gas and stripping it from the recovered acid. Part of the calcine is water-leached before it is recycled to prevent accumulation of sodium and potassium salts in the magnesia circuit. The water-soluble salts are dried and drummed in preparation for special (i.e., dry) storage.

The Case 4 waste treatment system is not suitable for wastes containing appreciable quantities of sodium or potassium salts.* The alkali-metal nitrates are relatively low-melting, yet do not decompose except at relatively high temperatures ($\sim$750°C for $NaNO_3$), if at all (KNO_3 is stable to 830°C).[76] Therefore, in Case 4, new restrictions are placed on the sodium content of the yellow cake feed, and internal process changes are made to eliminate the use of sodium and potassium compounds in the refining section of the UF_6 plant. [The use of KOH scrubbers for fluoride is permitted in conversion since these wastes are treated separately.]

---

*It is possible to recover HNO_3 from wastes containing $NaNO_3$ by adding H_2SO_4 to the waste and destructively distilling off the nitric acid.[153] This system was not selected for Case 4 because the evaporator bottoms would consist of a relatively large quantity of water-soluble radwaste salts, which would not be in keeping with an advanced case study. There was also uncertainty about the behavior of ammonium salts in this system (e.g., the risk of detonation if, as a result of some malfunction, insufficient H_2SO_4 were added and the evaporator went dry on a high-NH_4NO_3 feed).

To be consistent with other ALARA reports in this series, Case 4 has no direct liquid release to surface streams carrying radioactive materials or chemicals from the solvent extraction process. However, there is a long-term potential for a small nitrate release via seepage or leaching if the solid chemwastes should come into contact with water. Airborne releases from waste treatment consist of NO_x, Cl_2, excess ozone from nitric acid recovery, and dusts from handling the recycle magnesia and the calcine bleed; these are basically chemical wastes. Since the radwaste is handled wet and cemented, no significant radwaste dust release occurs. The recovered ammonia solution is purified by evaporation and is expected to be suitable for release off-site.

On a daily basis, the Case 4 system treats 164,000 ℓ of solvent extraction wastes by chemical and physical means, including evaporation and the calcination of 18 MT of nitrate salts per day. It recovers 13.5 MT of HNO_3 as 45 wt % acid suitable for recycle and 1.5 MT of ammonia as a 28 wt % aqueous solution suitable for industrial use. A total of 2.3 MT of radwaste solids (cemented and drummed), 2.6 MT of $CaSO_4 \cdot 2H_2O$ chemwaste solids (stored on-site), and 0.4 MT of water-soluble chemwaste solids (dried and drummed, to special storage) is generated. Chemical requirements are 0.7 MT of makeup MgO, 0.7 MT of CaO, 68 kg of ozone as a 1 wt % mixture in air, 160 kg of $BaCO_3$, and 17 kg of $Al_2(SO_4)_3$. A total of 6 MT of MgO is recovered for reuse in waste treatment.

Many of the steps in this case study such as the thermal denitration of $Mg(NO_3)_2 \cdot 6H_2O$, the magnesia purification system (sodium and potassium bleed), and the two-stage radwaste-chemwaste precipitation have not been demonstrated on uranium refinery wastes. Research and development would be necessary before the system would be ready for industrial use.

The Case 4 waste treatment system is described in more detail in the following paragraphs, and in Figs. 4.21-4.25. Flows are presented in Tables 4.35-4.40.

Restrictions on sodium salts in the plant feed. Because of the large temperature range (305 to ∿750°C) over which sodium nitrate exists in the molten, undecomposed state, sodium ions create serious difficulties with

caking and corrosion in calciners.[76,82-84] Therefore, new restrictions limiting sodium (and other alkali metal) salts are placed on the plant feed in Case 4. It is simpler technically to change the mill processes than to deal with these ions in UF_6 plant wastes. The level of sodium which can be accommodated in the system described here is not known. For a fluid-bed calciner based on alumina, the upper limit corresponds to ∿2 wt % sodium in the calcined product.[84]

The Case 4 feed to the model plant is assumed to be steam-dried ammonium diuranate, with the uranium present as a 1:1 mixture of $(NH_4)_2U_2O_7$ and UO_3. The feed is contaminated with a small amount of ammonium sulfate and 0.2 wt % sodium ions (on a uranium basis). The other impurities are assumed to be the same as those in Cases 1-3. The composition of the raffinate waste based on the Case 4 feed is presented in Table 4.25.

The model restricts sodium salts in the yellow cake feed to the minimum which can be produced by the mills. For acid-leached yellow cake, this is ∿0.15 wt % sodium on a uranium basis;[21] for alkaline-leached yellow cake, it is ∿0.5% sodium. The 0.15% sodium limit can be met by acid-leach mills which use $(NH_4)_2SO_4$ or H_2SO_4-$(NH_4)_2SO_4$ as the stripping or eluting agent and ammonia to precipitate the yellow cake.[21] All domestic acid-leach mills use ammonia precipitation today; however, in order to avoid contaminating the product with sodium ions, backfitting would probably be necessary at those mills that use NaCl in stripping or eluting. Sodium chloride [or, more correctly, a mixture of NaCl and $(NH_4)_2SO_4$] is a better stripping agent than $(NH_4)_2SO_4$. Changing the stripping agent would require careful pH control during stripping and might result in slightly higher uranium losses at the mill.[154] In the alkaline-(sodium carbonate-) leach process, the precipitation of $Na_2U_2O_7$ is an essential part of the mill circuit.[2,155] In order to meet the new low-sodium specification, the alkaline-leach mill operator would have to add an additional purification step such as dissolving the product in sulfuric acid and reprecipitating with peroxide or washing the product with $(NH_4)_2SO_4$.[156] A small residual sodium contamination of 0.5% is assumed for the model. The wastes from the purification step have relatively little impact on the existing mill tailings pond, which already

contains Na_2CO_3, NaOH, and usually some lime in ore residues. In contrast, the same waste at a midwestern UF_6 plant where natural evaporation ponds are impractical represents an expensive disposal problem in the advanced cases that minimize liquid effluents. The additional cost to the mill operators to meet the new specifications is not included in the case study.

One parameter which would need to be investigated if the Case 4 waste treatment system were considered for actual plant use is the level of sodium ions which can be tolerated. Evan a slightly higher sodium level of 0.5% for the acid-leach feed (vs 0.15% in the model) would allow the mill operator the option of using NaCl to strip or elute, with an $(NH_4)_2SO_4$ wash to remove the sodium impurity in the precipitated yellow cake. Almost all acid-leach mills could meet a specification of 1.4% sodium maximum without backfitting.

Restrictions on chloride in the plant feed. Chloride is very corrosive in the recycle nitric acid stream and expensive to remove (Sect. 6.0).[47] It is limited to the average in the feed today (i.e., 0.07 wt % of the uranium).

Process changes at the refinery. Internal process changes are made at the UF_6 plant to eliminate sodium and potassium additives in the refinery section.* In solvent treatment (Sect. 4.4.5.6), $Mg(OH)_2$ slurry replaces the caustic scrub. Material flows for the model are presented in Table 4.17. Magnesium hydroxide was used to precipitate uranium at the Anaconda mill for a number of years,[157,158] and was also used in solvent treatment at the Fernald refinery.[21] Although a slurry may be less convenient to handle than a caustic solution, no major difficulties are anticipated.

Lime [$Ca(OH)_2$] slurry replaces the caustic scrub used to remove HF from the miscellaneous digestor off-gas (Sect. 4.4.5.4). This system has been tested on a small scale for air streams containing 5 wt % HF.[43] Development would be required before it is ready for industrial use.

Radwaste precipitation. Codes are shown on Fig. 4.21; material flows are given in Table 4.35. Barium carbonate treatment is applied for 99%

---

*The use of KOH scrubbers to remove fluoride from off-gases is permitted in the conversion section of the plant since those wastes are treated separately from the raffinate.

radium removal as described in Sect. 4.4.11.2, and the raffinate (Stream 2R) is neutralized with $Mg(OH)_2$ slurry [Stream 4; 1.5 kg H_2O/kg $Mg(OH)_2$] to a pH of 9 to precipitate $Al(OH)_3$ and $Fe(OH)_3$ along with most of the radioactive materials. Magnesium sulfate has an aqueous solubility of 267 g per 1000 g of saturated solution[159] and does not precipitate in the model. The solids are separated by centrifuging, and the cake is washed in the centrifuge (1.5 ℓ of wash water per kg of solids) to remove sorbed nitrate salts. The system generates an estimated 2.3 MT of solid radwaste per day (Stream 6). The estimated chemical composition of the solid radwaste is given in Table 4.27, and the total amount of radioactive materials in Table 4.11, using the assumptions of Sect. 4.4.11.3. (The specific activities shown in Table 4.11 refer to the waste after cementing.) Daily chemical requirements are 5.1 MT of $Mg(OH)_2$, 160 kg of $BaCO_3$, and 17 kg of $Al_2(SO_4)_3$. Most (∿95%) of the magnesia is recycle material. Magnesia neutralization of uranium refinery wastes has not been tested experimentally. Therefore, there is uncertainty in the flows, particularly the chemical composition of the solid waste.

The primary purpose of radwaste precipitation is to concentrate most of the radioactive materials into solids having a relatively low solubility in water and to keep most of the activity out of the calciner, which may be a high-maintenance operation.[77] Magnesia is used in preference to lime because the quantity of generated radwaste which requires final disposal is nearly a factor of 2 lower (Table 4.27), and because $Mg(NO_3)_2$ decomposes at a lower temperature than does $Ca(NO_3)_2$ (430 to 455°C vs 612 to 645°C).[75,76]

Cementing the radwaste.* In Case 4, the wet centrifuge cake (Fig. 4.21, Stream 6) is cemented as a 15% radwaste—45% cement—40% water mixture and then drummed ready for shipment to an approved burial ground (Stream 10). Cementing reduces the potential for long-term leaching by natural waters and decreases the diffusion-controlled radon release in the event of drum

*Cementing the radwaste can be omitted without affecting the nitric acid recovery system. Other options for handling the radwaste include drying and drumming as in Case 3 or calcining to Al_2O_3 and Fe_2O_3 and drumming. The calcined waste is chemically more inert than the hydroxide form obtained directly by neutralization. If the waste is free of sulfate, the calcine would also be a suitable form for final disposal.

failure. The average specific activities of the solid radwaste are lower in Case 4 than in the earlier case studies because of the dilution by the cement (Table 4.11). Since radwastes are handled wet, there are no airborne radioactive particulates. On a daily basis, 2.3 MT of radwaste (dry solids basis), 7.0 MT of cement, and water are mixed to produce about 15.5 MT of cemented waste. The cost of shipping and final disposal of the cemented product is not included in the case study.

Chemwaste precipitation. After the radwaste has been removed, the liquid waste is treated with a stoichiometric quantity of lime to precipitate $CaSO_4 \cdot 2H_2O$, CaF_2, and other insoluble calcium compounds (Table 4.27 or Fig. 4.21, Stream 18). The objective of two-stage precipitation is to prevent most of the sulfate and fluoride, which are corrosive, from entering the calciner, yet at the same time to minimize the quantity of solid radwaste requiring final disposal. Chemwaste precipitation is conducted in conjunction with ammonia removal and boildown (discussed later). The hydroxide ions from the lime combine with ammonium ions in the solution to form molecular ammonia, which is volatilized by heating:

$$Ca(OH)_2 + 2NH_4^+ + SO_4^{2-} \longrightarrow CaSO_4(s) + 2H_2O + 2NH_3(g).$$

Some problems may be encountered with scale formation in the equipment. After the ammonia has been removed, the mixture is centrifuged; the chemwaste solids are washed in the centrifuge and then transported to a lined impoundment near the plant.

The average daily flows are presented in Table 4.35. About 900 kg of $Ca(OH)_2$ is added as a dilute slurry [Fig. 4.21, Stream 12; 150 g of $Ca(OH)_2$ per liter] to ensure good mixing. The system generates an estimated 2.6 MT of chemwaste solids, including excess $Mg(OH)_2$ from ammonia removal (discussed later) and 10% excess $Ca(OH)_2$ (Table 4.27).* Flows will vary from day to day with the amount of sulfate impurity in the plant feed. The recycle magnesia contains some sulfate impurity from solvent treatment waste (discussed later); this is also removed during chemwaste precipitation. The Case 4 system generates more $CaSO_4$ solid waste than do the

*It is assumed that a gypsum coating forms on some of the $Ca(OH)_2$ so that it is not all available for use.

Case 1 and Case 3 systems because all sulfate is converted to solids, while in Cases 1 and 3 the liquid release carries some sulfate (2.1 g/ℓ as $CaSO_4$).[131]

It is desirable to operate the chemwaste precipitation near the stoichiometric calcium requirements. If too little lime is added, the calciner feed contains sulfate, more corrosion occurs in the calciner, and there is a larger bleed of $MgSO_4$ with the sodium and potassium bleed (discussed later), thus increasing the quantity of soluble salts requiring disposal. If too much lime is added, calcium ions displace magnesium ions in solution and the calciner feed contains $Ca(NO_3)_2$, which will not denitrate under Case 4 conditions. A small excess of lime can be tolerated since the calcium ions will be precipitated by the sulfate in the solvent treatment waste when Streams 19 and 27 (Figs. 4.21 and 4.22) are combined.

An estimated 24 kg of residual nitrate per day is stored in the lined basin with the gypsum solids. This estimate is based on the following assumptions:

1. The centrifuge cake contains about 35% residual moisture.
2. The waste solution is concentrated during ammonia removal to about one-half its original volume [i.e., ∿1.8% of the $Mg(NO_3)_2$ solution is sorbed on the cake].
3. Ninety percent of the soluble nitrate is removed during washing on the centrifuge.

There is a long-term potential for a small nitrate release via seepage or leaching of the stored solids if the integrity of the liner should fail.

The model predicts that the $CaSO_4 \cdot 2H_2O$ chemwaste will contain levels of radioactive materials which are barely distinguishable above the natural background of the lime (Table 4.11), and that the waste is acceptable for on-site burial in the impoundment. This has not been tested experimentally. The assumptions used in the assessment are as follows:

1. The treated raffinate after radwaste precipitation contains 3 ppm uranium.

2. Barium carbonate treatment removes 99% of the radium; magnesia neutralization precipitates 99.9% of the thorium and 90% of the remaining radium.

3. Chemwaste precipitation has no effect (0% removal) on soluble radioactive materials.

4. Twenty-four percent of the radioactive materials which pass radwaste precipitation and 24% of the materials in the solvent treatment waste are recycled to ammonia removal with the recycle magnesia as insoluble compounds and are removed with the chemwaste solids.

The case study includes the cost of a lined impoundment, but not that of stabilization (i.e., covering the waste with earth) when the facility is decommissioned.

Ammonia removal and recovery. Case 4 is conservatively designed to remove the ammonia prior to denitration. This minimizes the potential risk of detonation[160] in the calciner and provides for more economical recovery of nitric acid from the calciner off-gas. The Idaho Waste Calcining Facility has demonstrated that NH_4NO_3 could be handled safely in a fluidized-bed calciner.[80,81] However, it must be pointed out that (1) the quantity of ammonium salts handled was small relative to the quantity in UF_6 plant wastes; (2) Idaho did not recover nitric acid from the off-gas (i.e., dilution by the air used to fluidize the bed was of no concern); and (3) problems were encountered with ammonia volatilizing without decomposing and then recombining with species in the off-gas to form solids which accumulated in the off-gas scrubbers and also plugged the filters. The presence of ammonium ions in the calciner feed will reduce the nitric acid recovery since NH_4NO_3 decomposes to N_2O or N_2 (depending on the conditions), which are stable compounds and do not react with water and air in the absorption tower. This is of little concern since the value of the recovered acid is small relative to the cost of waste treatment.

The NH_4NO_3 solution is made basic and heated to volatilize the molecular ammonia (Fig. 4.21, Streams 11-14):

$$Mg(OH)_2 + 2NH_4^+ \longrightarrow Mg^{2+} + 2H_2O + 2NH_{3(g)}.$$

Since $Mg(OH)_2$ has a low solubility in water, the mixture is stirred to keep the $Mg(OH)_2$ suspended in the solution. Water distills with the ammonia. This is a batch operation to maximize the ammonia removal.

The ammonia-rich vapor is passed through a demister to remove entrained mist and is then concentrated in a rectifier to a 28 wt % aqueous ammonia solution (Fig. 4.21, Stream 15). An overall separation factor of 10,000 is generally attained between the condensate and the concentrated liquor for nonvolatile contaminants treated in a single-stage evaporator. Therefore, the recovered ammonia is expected to be suitable for general industrial use. No cost credit is taken for the recovered ammonia. Water withdrawn from the bottom of the rectifier (Stream 16) is reused within the UF_6 plant.

Ammonia removal is conducted in conjunction with concentration of the denitration feed and with chemwaste precipitation. After centrifuging to remove the solids, the <u>treated liquid waste</u> (Fig. 4.21, Stream 19) is primarily a $Mg(NO_3)_2$ solution. It contains traces of alkali metal and chloride ions and very low levels of radioactive materials. This is the feed to the nitric acid recovery system (discussed later).

Flows per day are presented in Table 4.35 for the codes shown on Fig. 4.21. In the model, 1.4 MT of $Mg(OH)_2$ slurry (mostly recycle calcine) is added to remove ammonia and convert the waste to a $Mg(NO_3)_2$ system. Some of the necessary hydroxide ions were added when the pH was raised to 9 during radwaste precipitation and some as $Ca(OH)_2$ to supply calcium ions for chemwaste precipitation. With 50% boildown an estimated 99.8% of the ammonia is removed, leaving a solution containing about 300 g of $Mg(NO_3)_2$ per liter. The model waste treatment facility recovers 1.5 MT of ammonia as a 28 wt % aqueous solution suitable for off-site industrial use. The number of plates needed in the ammonia rectifier will depend on the NH_3

concentration that can be tolerated in the recycle water, which is unknown.* Costs are based on an NH_3-N concentration of 20 mg/ℓ in the recycle water and five plates in the tower. Development is needed to optimize conditions.

Charcoal filters. In Case 4, it is possible that organics, for example butyl alcohol or butyric acid, may be present from the degradation of TBP or from impurities in the organic solvent which may distill during waste treatment. Over a period of time, these volatile organics might accumulate in the recycle water circuit and create difficulties in the process or cause an odor problem. Case 4 makes provision for removal of these organics by passing a portion of the recycle water through activated-carbon filters (Sect. 4.3.2.11). There is uncertainty about both the need and the cost of the carbon purification system.

Solvent treatment system with ammonia and water recycle. The solvent treatment system is shown schematically in Fig. 4.22. Stripped organic solvent is treated with $(NH_4)_2SO_4$ solution (Stream 21) and $Mg(OH)_2$ slurry (Stream 22) to recover uranium and remove organic degradation products. Magnesia is substituted for the NaOH used in Cases 1-3 to keep alkali-metal ions out of the waste. The recovered MgU_2O_7 and excess $Mg(OH)_2$ are recycled to the process (Stream 24). The waste, which is a dilute solution of $Mg(NO_3)_2$ and $(NH_4)_2SO_4$, is washed with hexane to recover TBP. Magnesia slurry (Stream 26) is added, the ammonia removed by volatilization, and the waste is concentrated to ∿300 g of salt per liter - one-tenth the original volume (Stream 27). This is a batch operation. The first cut of distillate, which is rich in ammonia (Stream 28), is condensed and reacted with H_2SO_4 (Stream 30) to regenerate the $(NH_4)_2SO_4$ solution. An estimated 92% of the NH_3 and 25% of the water in the waste are reused in $(NH_4)_2SO_4$ treatment. The remainder of the condensate (Stream 31), which contains an average of 110 mg of NH_3-N per liter, is recycled to the $Mg(OH)_2$ wash

*In keeping with the other reports in this series, the most advanced case study has no liquid radioactive releases. Therefore, the bottoms from the ammonia rectifier are recycled as process water. However, if there are problems in recycling the water, the bottoms could be released to a surface stream. The water carries very small quantities of radioactive materials and, with four or five stages of rectification, is expected to contain only 20 to 50 mg of NH_3-N/ℓ. In comparison, the NH_3-N content of municipal wastewater generally ranges from 15 to 50 mg/ℓ.[161]

and scrub wash. Activated-carbon filters are used to prevent the accumulation of organic materials in the recycle water circuit.

The concentrated $Mg(NO_3)_2$-$MgSO_4$ solution (Stream 27) from solvent treatment is combined with the concentrated $Mg(NO_3)_2$ solution from treating the raffinate (Stream 19) before nitric acid recovery. The amounts of sulfate and uranium in Stream 27 are so small that they are not expected to cause difficulties in the calciner (discussed later). The sulfate provides a small margin of safety if too much lime is inadvertently added to the raffinate during chemwaste precipitation. Most of the sulfate will be removed with the other chemwaste, and most of the uranium with the other radwaste, when the magnesia calcine is recycled to raffinate treatment. Treatment of the solvent treatment waste separately avoids dilution of the more-concentrated raffinate stream and reduces the water load to the ammonia rectifier by almost a factor of 2. Makeup $Mg(OH)_2$ (e.g., not recycle calcine) is used in solvent treatment to avoid possible contamination of the organic solvent by impurities in the recycle calcine.

Flows per day are presented in Table 4.36. The system treats 4.5 x 10^4 ℓ of waste principally by evaporation, recovering 45 kg of NH_3 and concentrating 324 kg of nitrate to a suitable feed for nitric acid recovery. Magnesia requirements amount to 590 kg, most of which is used in treating the organic solvent in place of the NaOH wash used in Cases 1-3. There is uncertainty in the solvent treatment flows (see Sect. 4.4.5.6).

The magnesia substitution, which is not very expensive, is an essential part of the overall Case 4 system since it avoids introducing alkali-metal ions into the raffinate waste via the recycle uranium stream (Fig. 4.22, Stream 24). The water and ammonia recovery features of the Case 4 system for treating solvent treatment waste are expensive relative to the quantity of chemicals and radioactive materials removed from the wastewater.

Concentrating weak acid wastes. In Case 4, both the process itself and the nitric acid recovery system generate dilute nitric acid wastes such as evaporator overheads and vacuum pump seal leakage. These wastes are neutralized with $Mg(OH)_2$ and concentrated to about 220 g of salts per

liter in a wiped-film evaporator; the concentrated waste is then processed with other wastes in the nitric acid recovery system (Fig. 4.23). The off-gas is condensed and recycled to the process for use as deionized water. The behavior of $Mg(NO_3)_2$ in an evaporator is not known. By analogy to $UO_2(NO_3)_2$, it is thought that the waste can be concentrated to 200 g (or more) per liter without decomposition (i.e., without HNO_3 or NO_x appearing in the off-gas).

For purposes of illustrating the waste treatment method, flows are presented in Table 4.37 based on the arbitrary assumption that the weak acid wastes contain 4% of the nitrate values obtained when $UO_2(NO_3)_2$ and the raffinate are denitrated. Liquid flows of process wastes are the same as in Cases 1-3; flows from the raffinate nitrate recovery system are assumed to be half the overheads from second-stage boildown minus the dilute acid used in the NO_x absorber. The system handles 5.9×10^4 ℓ of dilute acid containing 1.3 MT of nitrate per day. Chemical requirements are 0.6 MT of $Mg(OH)_2$, most of which is recycle magnesia. There is uncertainty in these estimates.

The Case 4 system for concentrating the weak acid wastes requires a relatively large amount of energy to evaporate water compared with the quantity of chemicals and radioactive materials recovered or removed from the wastewater.*

Waste denitration. Magnesium nitrate is similar to $UO_2(NO_3)_2$ in that it exists as a stable hexahydrate which melts or fuses in its water of crystallization at relatively low temperatures (56 to 60°C for $Mg(NO_3)_2 \cdot 6H_2O$[75,162] compared with 60°C for $UO_2(NO_3)_2 \cdot 6H_2O$[163]) and can be denitrated

*To be consistent with the other reports in this series, an evaporator is used to dispose of water in Case 4 and the nitrate is recovered. Some cost savings would be realized if wastes such as evaporator overheads, which contain negligible quantities of radioactive materials and only low levels of nitrate, were neutralized and released to a surface stream. For the model plant, the chemical release would be about 290 kg of NO_3^--N per day. Release to a 150-cfs stream (4-m^3/sec) would increase the NO_3^--N level in the stream by 0.8 mg/ℓ, compared with the 40 CFR 141 drinking water standard of 10 mg/ℓ maximum.[130] This would have a relatively small effect on the receiving stream. Release to a 15-cfs (0.4-m^3/sec) stream would be marginally acceptable.

at relatively low temperatures [somewhere in the range 310 to 450°C for $Mg(NO_3)_2 \cdot 6H_2O$[75,76] vs 300°C for $UO_2(NO_3)_2 \cdot 6H_2O$[163]]. It appears that $Mg(NO_3)_2$ could be denitrated in equipment similar to that which has been used to denitrate $UO_2(NO_3)_2$ on a production scale for a number of years.[3,103,104] Assuming that the necessary modifications can be made, this method offers advantages in that nitric acid recovery from the off-gas is economical and the UF_6 plant operator is familiar with the equipment.

The system is shown schematically in Fig. 4.24. The estimated composition of the feed is given in Table 4.38; flows for the codes shown on Fig. 4.24 are presented in Table 4.39.

The three $Mg(NO_3)_2$ waste streams - Stream 19 from the raffinate, Stream 27 from solvent treatment, and Stream 36 from weak acids - are combined and boiled down to the approximate composition of $Mg(NO_3)_2 \cdot 6H_2O$ (Stream 38). For purposes of estimating flows, it is assumed that the molten salt contains 3.2 moles of H_2O per mole of nitrate. Hold tanks and transfer lines for the molten salt are jacketed with low-pressure steam to maintain pressures above the freezing point.

In the model, a continuous mechanically stirred-bed calciner with a bed temperature of 350 to 450°C is used to denitrate the $Mg(NO_3)_2 \cdot 6H_2O$. The main components are a heated feed transfer system, a trough with electrically heated walls and a horizontal rotating agitator to keep the powder bed thoroughly mixed, a MgO hopper, and an off-gas system.

Molten $Mg(NO_3)_2 \cdot 6H_2O$ is fed to the reactor through three rotameters, each of which serves an individual feed pipe extending vertically from the top of the trough to within about 7.6 cm (3 in.) of the bottom. These feed pipes are steam jacketed throughout their entire length. Thermocouples which extend vertically into the bed at points just opposite the feed points are used to control valves on the individual feed pipes. The stirred-trough calciner functions essentially as a mechanically fluidized bed, and it produces a dense, spheroid calcine which generates little dust. The MgO made in the trough (Fig. 4.24, Stream 39) overflows through an adjustable weir into a collection bin below the reactor, where

it is continuously picked up and conveyed pneumatically to the MgO recovery system. Operating pressure is maintained slightly below atmospheric so that air flows into the system and nitrogen oxides do not escape.

No operational data for calcining $Mg(NO_3)_2$ were available. In thermobalance studies, Wendlandt reported that $Mg(NO_3)_2 \cdot 6H_2O$ first lost water, and then lost oxides of nitrogen rapidly above 310°C, with the MgO level at 455°C.[75] Gordon and Campbell reported that the liquid hydrated nitrate first decomposed in such a way as to generate nitric acid vapors, with slight NO_2 fumes at 321°C and vigorous NO_2 fumes at 430°C.[76] Based on these studies, the bed temperature for calcining $Mg(NO_3)_2$ is estimated as somewhere in the range 350 to 450°C, which is higher than the 300°C bed temperature used to denitrate $UO_2(NO_3)_2$.[163] The stirred-bed calciner was tested with $UO_2(NO_3)_2$ at temperatures up to 450°C.[104] Erratic heat transfer was experienced at temperatures above 350°C. Basic research to determine the chemistry and optimum conditions for denitration, as well as engineering development of equipment, is needed before this method is ready for industrial use.

Sodium nitrate (mp, 304°C) and potassium nitrate (mp, 332°C), which are present as impurities, do not denitrate under these conditions.[76] For the model Case 4 flows, there will be a ∿2% nitrate loss as undecomposed $NaNO_3$ and KNO_3 in the calcine.*,** The alkali-metal nitrate will probably be molten in the calciner and, if allowed to accumulate in the recycle magnesia, would cause problems with calcining and corrosion. If too much lime is inadvertently added during chemwaste precipitation, the calcium nitrate impurity (decomposition temperature, ∿600°C) would not denitrate. This would increase the nitrate losses but would not cause difficulties in the calciner since the melting point of $Ca(NO_3)_2$ is 550°C. Calcium ions will not accumulate in the recycle magnesia circuit since they are precipitated by the sulfate in the incoming feed.

---

*If desired, the sodium nitrate could be decomposed by calcining at 750°C. However, it would probably be simpler and more effective to treat the $NaNO_3$-KNO_3 bleed from MgO recovery (discussed later).

**Magnesium sulfate precipitates in preference to Na_2SO_4 in this system.[164] Therefore, it seems unlikely that sulfate could be used to complex the sodium ions during calcining, thus decreasing the nitrate loss to the calcine.

The waste denitrator is designed for a daily flow of 17 MT of $Mg(NO_3)_2$ and 1.4 MT of salts which do not denitrate.

Waste denitration off-gas treatment and nitric acid recovery (Fig. 4.24). Off-gases from the second-stage $Mg(NO_3)_2$ boildown are condensed (Stream 37). In the absence of data, it is assumed by analogy to the boildown of $UO_2(NO_3)_2$ that half the condensate can be recycled to the process as deionized water while the other half is contaminated with a small amount of HNO_3 and is discarded as weak acid waste (except for a portion used in the NO_x absorption tower). All weak acid waste is treated (see Fig. 4.23 and earlier discussion) in Case 4. The case study includes charcoal filters to remove organics which might accumulate in the recycle water circuit. Both the need and the cost of the charcoal filters are uncertain.

Fumes from the waste denitrator are passed through a baffle-type wet scrubber and condenser system which remove HNO_3 and water vapors (Stream 40); condensate serves as the scrub liquor. The NO_x tail gases (Stream 41) are drawn off by compressors to a 20-plate absorption tower fed with condensate from the boildown. The off-gas will contain some HNO_3 vapors, but the quantity is not known. For purposes of illustrating the waste treatment method, it is arbitrarily assumed that 30% of the nitrate values in the off-gas are collected as HNO_3 in the scrubber. This corresponds to $\sim$24 wt % HNO_3 in Stream 40. The acid is concentrated to at least 40% HNO_3 in a 12-plate fractionating tower, purified by ozone treatment to remove chloride (discussed later), and recycled to digestion (Stream 50). Overheads from the rectifier (Stream 51) containing an estimated $\leq$200 ppm HNO_3 ($\leq$3 kg/day) are diluted with treated waste from the fluorine cell scrubber and released to a surface stream. The combined plant effluent meets the 40 CFR 141 drinking water standard of 10 mg/ℓ maximum for NO_3^--N.[130] There is also a small NO_x release to the atmosphere from the absorption tower (Stream 45).

The Case 4 waste treatment system recovers 13.5 MT of 45% HNO_3 acid from the waste suitable for recycle to digestion. This is in addition to 6.0 MT of 45% HNO_3 and 10.6 MT of 40% HNO_3 recovered from the denitration of $UO_2(NO_3)_2$ to UO_3. In Case 4, it is necessary to recover acid containing

at least 40% HNO_3 from both the $UO_2(NO_3)_2$ denitration (Sect. 4.4.5.8) and the waste denitration because little makeup 60% HNO_3 is added. This is in contrast to Cases 1-3, where 30 to 32% HNO_3 is withdrawn from the NO_x absorption tower and makeup 60% HNO_3 is used to increase the acid concentration to 40%. Although 40% acid would normally be recovered, the model plant has the capability of recovering more concentrated acid since >40% acid is sometimes needed with feeds such as high-fired UO_2, which are difficult to dissolve. The flows in Table 4.39 are for a 45% HNO_3 product. Case 4 costs are based on one large NO_x absorber for the refinery with a cost credit for the smaller absorber used in Cases 1-3. Note that Table 4.39 includes the NO_x from the denitration of $UO_2(NO_3)_2$ (Fig. 4.24, Stream 42) but not the 10.6 MT of HNO_3 vapor in the $UO_2(NO_3)_2$ denitration off-gas, which is recovered by a scrubber-condenser as 40% acid suitable for direct recycle as described in Sect. 4.4.5.8.

The Fernald refinery encountered problems with severe corrosion in a stainless steel, bubble-cap fractionator operated at atmospheric pressure on boiling nitric acid containing traces of chloride impurity.[47] An aggressive preventive maintenance program, including shutdown at 5- to 6-week intervals for internal inspection and repair was necessary. It is not feasible to use titanium as a material of construction because of problems in meeting the titanium specification on the UF_6 product.[22] Development work on the design of the rectifier is needed before recovery of nitric acid from raffinate waste would be practical on a commercial scale. Vacuum operation to reduce corrosion by lowering the temperature appears to be feasible.[47] Redesign of the trays to be more tolerant of corrosion is also needed. It is also possible that the chemistry of the $Mg(NO_3)_2 \cdot 6H_2O$ decomposition might be essentially the same as the decomposition of $UO_2(NO_3)_2$. If this should prove to be the case, 40% HNO_3 suitable for direct recycle, rather than the 24% HNO_3 assumed in the model, could be recovered from the waste denitrator off-gas by the scrubber-condenser (Stream 40); thus the HNO_3 acid fractionator would be unnecessary.

Fluoride control. Uranium refinery wastes contain a small amount of fluoride, which is highly corrosive in boiling nitric acid. Most of it is removed as CaF_2 during chemwaste precipitation (discussed previously);

an $Al(NO_3)_3$ trap is also provided to complex fluoride and prevent it from volatilizing into the rectifier. The $Al(NO_3)_3$ trap has been effective at the DOE Y-12 Plant.

Chloride removal.[47,48] The raffinate waste contains a small but significant quantity of chloride, which is highly corrosive in boiling nitric acid. Most of the chloride volatilizes during calcining, is collected by the scrubber-condenser, and passes to the rectifier (Stream 40). An estimated 8% passes through the scrubber-condenser to the NO_x absorption tower. If the chloride is not removed, most of it will be withdrawn from the rectifier (or absorption tower) with the 40 to 45% HNO_3 product and thus accumulate in the recycle acid circuit. The chloride tends to be absorbed in the upper part of the fractionator, where the acid concentration is low, and to be expelled from the lower part, where the acid concentration is high. This causes a high internal recycle during which chloride accumulates in the middle trays of the fractionator (or absorption tower) at the 15 to 20% HNO_3 zone and is potentially very corrosive.

The chloride impurity is removed with a 1% ozone—air sparge by oxidizing the chloride ions to free chlorine gas with ozone:

$$2H^+ + 2Cl^- + O_3 \longrightarrow O_2 + H_2O + Cl_2$$

and then stripping the Cl_2 gas from the solution with air. At a gas flow of 0.37 $m^3\ min^{-1}\ m^{-2}$ (1.2 cfm per ft^2 of tank area), the rate of chloride removal from 20% HNO_3 in a 2.1-m (7-ft) acid depth is about 60 ppm per hour at 70°C and chloride concentrations of ≥200 ppm in the acid.[47] For design purposes, a rate of 50 ppm per hour was assumed. The rate of chloride removal decreases significantly at chloride concentrations below 200 ppm. About 75% of the ozone is consumed through oxidation of chloride, ozone decomposition, and possible side reactions.

For the model SX-F UF_6 plant, the estimated chloride concentration in the condensate from the waste denitrator (Fig. 4.24, Stream 40) exceeds the 0.05% (500-ppm) level considered "tolerable" in the design of the Fernald fractionator.[48] Therefore, ozone treatment is applied to the rectifier feed (Stream 47) as well as to a bleed stream from the rectifier

(Stream 52).* The much smaller chloride bleed from the NO_x absorption tower (Stream 46, an estimated 8% of the chloride) is combined with the main chloride stream and treated with it. The first ozone sparge treatment lowers the chloride concentration of the rectifier feed from ∿840 ppm to 200 ppm. On the average, 43.1 kg (95 lb) of ozone per day as a 1 wt % ozone–air mixture and a 13-hr detection period in a heated, insulated tank are required. Costs are estimated for a system with the capacity to handle 120% of the average load [e.g., 28 kg (62 lb) of chloride in the feed and 54.4 kg (120 lb) of ozone per day with a 16-hr detection time in the first sparge tank]. In the second ozone sparge treatment, acid is withdrawn from a high-chloride plate in the tower at ∿350 ppm chloride [Stream 52; 23 ℓ (6 gal)/min], is cooled to 70°C, sparged with an ozone-air mixture in a heated insulated tank to lower the chloride content to about 200 ppm, heated, and returned to the next lower plate in the fractionator. Requirements are ∿13.6 kg (30 lb) of ozone per day and a detention time of 3 hr in the sparge tank. It is assumed that the ozone generators are adjustable and that the ozone content of the off-gas is 0.25%. The estimated ozone release is 14.2 kg (31 lb) per day. In the model, this is diluted with building ventilation exhaust before it is released to the atmosphere.** Demisters are used to remove entrained acid. The estimated release of HNO_3 vapor is 6 kg/day (4.4 kg calculated as NO_x) when the sparge is applied to 20% HNO_3.

Magnesia recovery. The calcine is ground to a fine powder and slaked to recover the $Mg(OH)_2$ (Fig. 4.25). Part of the magnesia slurry is recycled

*If a more corrosion-resistant rectifier is developed, treatment of the rectifier feed could be omitted and all the chloride could be removed when the rectifier bleed is treated.

**There is a potential for an unacceptable ozone level in the immediate vicinity of the vent. For example, if the ozone release is diluted with 60,000 cfm of building air exhaust, the ozone level in the effluent before atmosphere dilution is ∿6 ppm. Health effects have been reported to occur in the range of 0.15 to 0.20 ppm ozone.[165] If desired, the excess ozone could probably be destroyed by bubbling the off-gas from chloride removal through the sanitary wastes, or the ozone might be released through a stack.

directly to waste treatment (Stream 56), and part is water-leached to remove the sodium and potassium impurities (Stream 57). Magnesium sulfate (from solvent treatment) also dissolves. After leaching, the mixture is centrifuged to recover the $Mg(OH)_2$, which is insoluble; the cake is washed in the centrifuge; and the purified $Mg(OH)_2$ is recycled as a slurry to waste treatment (Stream 60). The leach solution containing the water-soluble salts, including 250 kg per day of nitrate, is evaporated to dryness, and the salts are packaged in polyethylene-lined drums (Stream 63). The salt waste is expected to contain very low levels of radioactive materials, but special (i.e., dry) storage will be required to isolate the nitrate.*,** Condensate from the evaporator is reused in slaking (Stream 61).

There is uncertainty both in the levels of sodium and potassium salts which can be tolerated in the recycle magnesia and in the ease of leaching to remove them. Development work is needed before this system is ready for industrial use. Flows are presented in Table 4.40, assuming that two-thirds of the calcine is recycled directly and one-third is purified before recycle. On a daily basis, the slaking equipment handles 6 MT of calcine (4.7 MT of MgO); the purification system is designed for 2.7 MT of slaked calcine, leaches the mixture for 1 hr at 80°C, evaporates 770 ℓ of water, and generates 440 kg of solid chemwaste salts per day.† The estimated chemical composition of the waste is given in Table 4.27.

The magnesia recovery system handles only low levels of radioactive materials. The primary bag filters for dust control on the handling systems for magnesia and for the dried chemwaste salts are considered to be a part of the basic liquid nitrate waste treatment cost. They are needed to control exposure to chemicals. Because this is a Case 4 study,

*The stored salts are a potential source of nitrate if the wastes should contact water.

**Another option would be to treat the nitrate salts with H_2SO_4 and distill off and recover the HNO_3, leaving a relatively innocuous residue of Na_2SO_4, K_2SO_4, and $MgSO_4$. This option was not costed.

†In the model, the chemwaste salts include 70 kg of $MgSO_4$. This quantity might be reduced by applying lime treatment to the solvent treatment waste; however, some sulfate impurity in the MgO calcine may be desirable to improve "reactivity" by analogy to the sulfate impurity that is deliberately added to UO_3 (Sect. 4.4.5.7).

a secondary bag filter is provided for Stream 65; however, it is not really necessary.* No HEPA filters are included on the chemwaste streams. Source terms for the airborne release of radioactive materials from waste handling, principally from magnesia recovery, are given in Table 4.6d. Although calcined UO_3 and ThO_2 are not expected to dissolve appreciably in the weakly basic leach solution, traces of radium might be solubilized. The specific activity of the chemwaste salt was conservatively estimated in Table 4.11, assuming that 0.005% of the magnesia solids undergoing leaching is carried over as fines (this corresponds to 1300 ppm solids suspended in the centrate, which is unlikely), and that magnesium serves as a carrier for radium just as calcium and barium serve as a carrier for radium (e.g., since 1.3% of the magnesium in the calcine being leached dissolves as $MgSO_4$, 1.3% of the radium also dissolves). The model predicts that the level of radioactive materials in the chemwaste salt will be barely distinguishable above the natural background of the chemicals.

4.4.12 Treatment of liquid fluoride wastes from off-gas scrubbers

The wet scrubbers used to remove HF, F_2, and UF_6 from off-gases generate liquid chemical wastes containing fluoride. The origin of these wastes is discussed in Sect. 4.4.7 (hydrofluorination), Sect. 4.4.8 (fluorination), and Sect. 4.4.9 (fluorine production). The hydrofluorination off-gas scrub liquor contains only very small traces of radioactive particulates which have passed the porous carbon filters and HF condensers. Case 1 is shown as an example in Table 4.29; the efficiencies of the off-gas treatment are given in Table 4.8. The fluorine cell off-gas scrub liquor has never been in contact with radioactive materials and contains only natural background levels of activity. The fluorination off-gas scrub liquor, as generated, contains a small amount of uranium from the UF_6 gas which was not removed by the condensers; however, only very small quantities of particulates containing ^{230}Th and ^{226}Ra pass the filters. After treatment to recover

*With primary and secondary bag filters, the maximum annual individual total-body dose from handling magnesia at the midwestern site is estimated as 1.9×10^{-3} mrem (Sect. 7, Table 7.4d, Case 4). Without the secondary bag filter, the dose would be about seven times higher, or 1.4×10^{-2} mrem (still a very low dose).

uranium, the fluorination waste liquor contains an estimated 30 ppm uranium (Sect. 4.4.8.5). The assumptions for estimating the quantities of radioactive materials in the liquid fluoride wastes are given in Sects. 4.4.7.2 and 4.4.8.4.

SX-F Case 1, treatment of liquid fluoride wastes. In Case 1, the liquid fluoride wastes are combined with lime-treated wastes from solvent extraction (Sect. 4.4.11.4). The calcium ions in the other wastes precipitate most of the fluoride as CaF_2 (1.7 MT/day) and also neutralize the acid in the water scrub liquors (Fig. 4.26, Table 4.29). The slurry is allowed to settle in a lined basin with a liquid detention time of 14 days, the CaF_2 is impounded, and the clear supernate is released. The effluent carries an estimated 3 ppm uranium,[60] 100 ppm fluoride, and 1.4 MT/day of potassium ions which originate in the fluoride wastes, as well as chemicals that originate in the solvent extraction wastes. Some uranium is removed by CaF_2 precipitation. The quantity of ^{230}Th and ^{226}Ra in the solids was estimated by assuming that these two radionuclides are present in the fluoride wastes as fine particulates which are coagulated and removed during CaF_2 precipitation, and that the solids settle with 35 wt % liquid which has the same composition as the liquid effluent. The radioactive content of the CaF_2 waste is given in Table 4.11. The solids contain a little more activity in Case 1 than in the later case studies where fluoride wastes are kept completely separate from solvent extraction wastes (Table 4.11). This treatment method is specific to Case 1 since it depends on the presence of calcium ions in other plant wastes.

SX-F Cases 2 and 3 treatment of liquid fluoride wastes. About 71,000 ℓ of water scrub liquors from hydrofluorination and fluorine production, bearing 320 kg of fluoride as HF and 0.3 g of uranium, is treated daily with lime to precipitate CaF_2 (Fig. 4.27; Table 4.41):

$$CaO + H_2O \longrightarrow Ca(OH)_2,$$

$$Ca(OH)_2 + 2HF \longrightarrow CaF_2 + 2H_2O.$$

The CaF_2 is allowed to settle in a lined impoundment basin. The clear supernate is diluted with other plant wastes, neutralized, sampled for

activity, and released to a surface stream. The lime requirement, including 10% excess CaO, is 510 kg/day. The fluoride release is 2 kg/day, assuming that the effluent contains 25 ppm fluoride. Source terms for the liquid radwaste release are presented in Table 4.9, assuming that 10% of the radioactive materials are released and that the remainder are carried by the CaF_2 precipitate. The ^{234}Th and ^{234m}Pa in the liquid effluent are calculated for a 30-day holdup in the basin. Since the ^{238}U parent had been separated from the ^{234}Th during processing, this allows some growth of ^{234}Th and associated ^{234m}Pa. The solid waste generated daily consists of 650 kg of CaF_2, 60 kg of excess $Ca(OH)_2$, and ∿250 kg of water which settles with the moist solids.

Spent KOH scrub liquor is regenerated and recycled to the process by precipitating fluoride with lime (Fig. 4.28). On a daily basis, ∿20,000 ℓ of spent scrub liquor carrying 540 kg of fluoride as KF, 50 kg of carbonate, and 570 g of uranium (30 ppm) is treated with 920 kg of CaO (Table 4.41). Most of the waste is generated by the fluorination scrubbers. The mixture is filtered to produce a clean KOH for recycle. The filter cake is slurried with water scrub liquor and pumped to the lined impoundment basin. The solid waste (i.e., moist filter cake) generated daily consists of 1100 kg of CaF_2, 110 kg of $Ca(OH)_2$ (10% excess), 90 kg of $CaCO_3$, and ∿450 kg of 10% KOH solution. Most of the radioactive materials are found in the solids. Lime treatment precipitates uranium by breaking the soluble tricarbonate complex and carries fine suspended solids with the CaF_2 precipitate. The case study assumes that most of the water vapor from the hydrofluorination reaction and from burning the H_2 in the fluorine cell off-gas is condensed in the water scrubbers, and that the only liquid bleed from the KOH circuit is in conjunction with the moist filter cake. This eliminates the direct liquid release of KOH scrub solution. Although most of the KOH is recycled to the process, the liquid bleed associated with the moist filter cake mixes with other liquid effluent in the CaF_2 impoundment basin and is potentially released to surface streams. Source terms for the bleed are estimated in Table 4.9, assuming that (1) the KOH solution contains 3 ppm uranium, (2) 90% of the radioactive materials are lime-precipitated, and (3) 2.3% of the KOH solution is released.

The case studies include the cost of the lined impoundment basin for storing the CaF_2 but not of decommissioning the plant; however, no technical difficulties are anticipated in disposal by on-site burial. If the radioactive impurities naturally present in the lime and KOH are ignored, the calculated uranium content of the CaF_2 is about 280 ppm, or 100 times higher than the average uranium content of the earth's crust. The ^{230}Th and ^{226}Ra concentrations are negligible (Table 4.11). Calcium fluoride and the fluorides and oxides of most of the radioactive and chemical contaminants are only slightly soluble; therefore, long-term leaching will be very slow.

SX-F Case 4, treatment of liquid fluoride wastes. Case 4 includes several process changes which reduce the fluoride load to liquid waste treatment. These changes are as follows:

1. The water venturi scrubber on the hydrofluorination off-gas in Cases 2 and 3 is replaced with a brine-cooled condenser, which increases the aqueous HF recovery from 90% to 99% (Sect. 4.4.7.2). This modification reduces the fluoride load to liquid waste treatment from hydrofluorination by a factor of 10.
2. The primary fluorination tower operates with 10% excess fluorine rather than the 40% assumed in Cases 1-3 (Sect. 4.4.8.3). The 27% efficient HF condensers on the fluoride feed are replaced with 65% efficient condensers, and the 90% efficient F_2 cleanup tower is replaced with a 95% efficient F_2 cleanup fluid-bed reactor (Sects. 4.4.8.3 and 4.4.8.7). In addition, a 97.5% efficient UF_6 cleanup reactor is added (Sect. 4.4.8.3). These process changes reduce the fluoride load to the wet scrubbing system by a factor of 3, and the uranium load by a factor of 60 (Sects. 4.4.8.3 and 4.4.8.7).
3. The fluoride scrubber waste from the fluorine cells is reduced by a factor of 2 by substituting more efficient, -84°C condensers (65% efficient vs 27%) and improving the fluorine utilization (99.5% vs 96%, Sects. 4.4.8.3 and 4.4.9.2).

This technology is not presently available to the industry.

In Case 4, the only water scrub liquor is from the fluorine cells. On a daily basis, 54,000 ℓ carrying 76 kg of fluoride as HF is treated with 120 kg of CaO and pumped to a separate impoundment basin where the solids settle (Table 4.41). Clear supernate is released to a surface stream. The effluent is low in chemwaste (1.4 kg of fluoride per day) and carries no radioactive materials; it contains water condensed from the process and is surplus to the water balance in the plant. In Case 4, the fluorine cell water scrub stream, which is released, must be kept completely separate from all other CaF_2 streams. If mixed with filter cakes from other streams, it might potentially carry noxious materials from the filter cake liquid bleeds.

Spent KOH solution is regenerated with lime and recycled to the scrubbers. The system is similar to Cases 2 and 3, except that the fluoride load has been reduced by a factor of about 3 (Table 4.41). Solids are moved to a lined disposal pit with no liquid release from the pit. The daily load to the treatment system is about 6200 ℓ of solution carrying 173 kg of fluoride and 174 g of uranium. The lime requirement is 290 kg/day. The resulting moist filter cake consists of 360 kg of CaF_2, 13 kg of $CaCO_3$, 35 kg of $Ca(OH)_2$, and ∿140 kg of 10% KOH solution. The uranium concentration in the CaF_2 waste is ∿430 ppm; the ^{230}Th and ^{226}Ra concentrations are barely distinguishable from the natural background of the lime (Table 4.11).

4.4.13 Liquid waste treatment summary, SX-F model plant

The liquid waste treatment methods are outlined in Table 1.1 and Figs. 4.29-4.32. The origins of the wastes and application of the treatment methods to the individual streams are discussed in the preceding sections. Information concerning the liquid chemwaste-radwaste effluents and the solid chemwaste-radwaste generated by the liquid treatment methods is summarized in Tables 4.9-4.11.

SX-F Case 1, liquid waste treatment. On a daily basis, 164,000 ℓ of solvent extraction wastes receive minimum treatment — $BaCO_3$ for radium control and lime neutralization to precipitate radioactive materials (Fig. 4.29). These wastes are then mixed with 90,000 ℓ of fluoride-bearing scrub liquors. The calcium ions in the treated solvent extraction waste

precipitate the fluoride as CaF_2, which is allowed to settle. This method of removing fluoride is limited to Case 1 since it depends on a "free" source of calcium ions. The combined wastes are diluted by a factor of ∿1.3 to meet the MPC for radium and are then released to surface streams (Fig. 4.29). The effluent may not be acceptable chemically at all sites. Estimated chemical releases per day are as follows: 14 MT of nitrate ions, 1 MT of ammonium ions, 2 MT of calcium ions, 1.4 MT of potassium ions, 1 MT of sodium ions, 0.2 MT of sulfate, and 0.03 MT of fluoride (Table 4.10). There may be small quantities of other chemicals in addition to those listed. The uranium content of the combined process wastes before dilution is 3 ppm. The radwaste release amounts to 7.9×10^{-2} Ci of U_{nat}, 2.8×10^{-2} Ci of ^{230}Th, and 2.0×10^{-3} Ci of ^{226}Ra per year for the UF_6 plant feed containing "low" levels of ^{230}Th and ^{226}Ra (i.e., 2800 pCi of ^{230}Th and 200 pCi of ^{226}Ra per gram of U_{nat}; Table 4.9). The estimated chemical requirements are 4.9 MT of CaO, 160 kg of $BaCO_3$, and 17 kg of $Al_2(SO_4)_3$. Each day the system generates 4.0 MT of solid radwaste and 1.7 MT of CaF_2 chemwaste, which are impounded on-site. The liquid retention times are 60 and 14 days for the radwaste settling basin and the fluoride settling basin respectively. This holdup period permits some of the ^{234}Th and ^{234m}Pa to decay. The assessment for a yellow cake feed containing "high" levels of ^{230}Th (14,200 pCi/g of U_{nat}) and ^{226}Ra (1600 pCi/g) is also presented in Sects. 4.4.11 and 4.4.12; however, this is not expected to be typical of UF_6 plant feed.

SX-F Case 2, liquid waste treatment. The solvent extraction wastes are neutralized with ammonia and impounded in lined lagoons in Case 2. Impoundment, which is an interim measure pending development of an acceptable permanent disposal method for the nitrate,[97] is the only alternative to releasing liquid nitrate wastes which is fully developed and immediately available for industrial application. Additional costs and/or releases of radioactive materials and/or chemicals may be incurred in disposing of the nitrate. Liquid nitrate Case 2 is not directly comparable to the other case studies because it does not address final disposal.

Case 2 also applies treatment to the liquid fluoride wastes. Potassium hydroxide scrub liquors are treated with lime to precipitate CaF_2 and then

recycled to the process, eliminating most of the KF salt from the effluent (Fig. 4.28, Tables 4.10 and 4.41). Water fluoride scrub liquors are treated with lime, the CaF_2 is permitted to settle in a lined pond with a liquid detention time of 1 month, and the clear supernate is then released (Fig. 4.30). These treatments essentially eliminate the major sources of fluoride in the effluent (Table 4.41).

In summary, Case 2 liquid effluent contains 2 kg of fluoride, 50 kg of sulfate, 30 kg of potassium ions, and 50 kg of sulfate per day (Table 4.10). The uranium content of the combined wastes is 3 ppm (before dilution). Major radionuclides released per year are as follows: 3.8×10^{-6} Ci of ^{238}U, 3.8×10^{-6} Ci of ^{234}U, 9.2×10^{-8} Ci of ^{235}U, 3.2×10^{-8} Ci of ^{230}Th, and 2.3×10^{-11} Ci of ^{226}Ra for the "low-impurity" feed option (Table 4.9). On a daily basis, a total of 164,000 ℓ of nitrate waste is treated with 2.8 MT of ammonia and the nitrate brine is impounded in lagoons; 90,000 ℓ of fluoride wastes are treated with 1.4 MT of CaO. The waste treatment systems generate 1.4 MT of solid radwaste and 2.0 MT of solid chemwaste, which are impounded.

SX-F Case 3, liquid waste treatment. Case 3 uses biological nitrification/denitrification to destroy the ammonium and nitrate and then releases a purified wastewater (Fig. 4.31). The release of radioactive materials is similar to that in Case 1. The ammonium salt load to waste treatment is reduced by calcining part of the yellow cake feed to the UF_6 plant to volatilize ammonia. Barium carbonate treatment is applied to precipitate radium, and the solvent extraction wastes are neutralized with lime to precipitate radioactive materials, toxic heavy metals, and some chemicals. The ammonium ions are then oxidized to nitrate by nitrifying bacteria, and the nitrate is reduced to nitrogen gas by denitrifying bacteria. The purified wastewater that is released contains $NaHCO_3$ (baking soda) at levels below the taste threshold. Biological nitrification and denitrification have never been demonstrated on uranium refinery wastes; research and development would be required before they are ready for industrial use. Case 3 also includes the Case 2 treatments for fluoride scrub liquors.

About 164,000 ℓ of solvent extraction wastes and 90,000 ℓ of fluoride scrub wastes are treated each day. The UF_6 plant effluent carries an

estimated 1.2 MT of sodium ions, 2.6 MT of bicarbonate, 290 kg of sulfate, 130 kg of potassium ions, 8 kg of nitrate, 0.4 kg of ammonium, and 2 kg of fluoride. The uranium content of the combined wastes before dilution is 3 ppm. The annual radwaste release amounts to 5.3×10^{-2} Ci of U_{nat}, 2.8×10^{-2} Ci of ^{230}Th, and 2.0×10^{-3} Ci of ^{226}Ra for the "low-impurity" feed option. The average liquid detection time in the biological system is 24 days, which permits some ^{234}Th and associated ^{234m}Pa to decay. The liquid-holdup time for the fluoride treatment system is 30 days. The treated wastes are combined, neutralized, and diluted by a factor of $\sim$1.3 to meet the MPC for radium before release to surface streams (Table 4.9). After dilution by a 15-cfs (0.4-m^3/sec) stream, the $NaHCO_3$ (baking soda) concentration is below the taste threshold. On a daily basis, chemical requirements are 7.5 MT of methanol, 2.7 MT of lime (CaO), 160 kg of $BaCO_3$, 17 kg of $Al_2(SO_4)_3$, 100 kg of $FeCl_3$, and a small quantity of H_2SO_4. The waste treatment systems generate 3.9 MT of radwaste, which is dried and drummed; 7.2 MT of $CaCO_3$, which is incinerated to recover the lime; 1.4 MT of biomass, which is incinerated; and 2.0 MT of CaF_2 chemwaste, which is impounded on-site.

SX-F Case 4, liquid waste treatment. Case 4 recovers HNO_3, NH_3, KOH, and water (Fig. 4.32). There is no direct liquid release of radioactive materials to surface streams, although a nonradioactive effluent composed of the overheads from the HNO_3 rectifier and lime-treated wastes from the fluorine cell H_2 water scrubber (Stream 7L) is neutralized and then discharged. The radwaste and some of the corrosive chemicals are precipitated first from the solvent extraction wastes, followed by recovery of ammonia for off-site industrial use, water for recycle, and nitric acid for recycle. The nitric acid recovery is based on thermal denitration of $Mg(NO_3)_2$ and includes a boildown tank, a calciner, a nitric acid rectifier, an NO_x absorber, an ozone sparge, (to remove chloride), and a magnesia recovery system. Sodium and other alkali metal ions must be restricted in the plant feed, and internal process changes must be made at the UF_6 plant to eliminate the use of alkali-metal ions in the refining section of the plant (but not in conversion). The Case 4 nitrate treatment system would require development before it is ready for industrial use.

The only water scrub liquor in Case 4 is from the fluorine cell H_2 off-gas. This stream, which is lime-treated before release, contains no radioactive materials and is kept separate from the other streams. The HF condenser replaces the water scrubber on the hydrofluorination off-gas, so that there is no water hydrofluorination scrub liquor in Case 4. Spent KOH scrub liquors are treated with lime and recycled. Case 4 incorporates several internal process changes which reduce the load to fluoride treatment — more efficient condensers on the hydrofluorination off-gas and on the fluorine cells, more efficient use of fluorine in the process, a more efficient fluorine cleanup reactor, and a UF_6 cleanup reactor on the fluorination off-gas.

Case 4 makes no provisions for the direct release of radioactive materials to surface streams, and the release of noxious chemicals has been reduced to 3 kg of nitrate and 1.4 kg of fluoride per day (as CaF_2). In this case, 164,000 ℓ of solvent extraction wastes is treated by chemical and physical means, including the evaporation and calcination of 6.1 MT of nitrate salts (calculated as MgO) per day. A total of 13.5 MT of HNO_3 is recovered from the waste as a 45 wt % acid suitable for recycle and 1.5 MT of ammonia as a 28 wt % aqueous solution suitable for industrial use.* In addition, 6200 ℓ of liquid fluoride wastes is also treated. On a daily basis, the systems generate 2.3 MT of radwaste (cemented and drummed), 2.6 MT of $CaSO_4$ chemwaste (stored on-site), 0.6 MT of CaF_2 chemwaste (stored on-site), and 0.4 MT of water-soluble chemwaste (dried and drummed, to special storage). Chemical requirements are 0.7 MT of MgO, 0.9 MT of CaO, 60 kg of ozone, and small amounts of $BaCO_3$ and $Al_2(SO_4)_3$.

4.4.14 Solid waste treatment summary, SX-F model plant

The principal solid wastes are those generated by the liquid waste treatment systems (Figs. 4.29-4.32, Sects. 4.4.11-4.4.13). Treatment methods are summarized in Table 1.1; the quantity of waste is shown in Table 4.11. The radwaste is impounded in Cases 1 and 2, dried and drummed in Case 3, and incorporated in cement and drummed in Case 4. Chemwastes that contain

*Case 4 also recovers 6.0 MT of 45% HNO_3 and 10.6 MT of 40% HNO_3 from the denitration of $UO_2(NO_3)_2$ to UO_3.

low levels of radioactive materials are impounded if they have a low solubility in water, or dried and drummed if they have a high solubility. The study includes the cost of lined on-site storage basins or preparing the wastes for shipment. It does not address the costs associated with final disposal such as shipment, burial, or decommissioning the waste impoundments.

SX-F Case 1, solid waste treatment. The principal radwaste is the sludge generated in treating the solvent extraction raffinate. In the base case, the lime neutralization and $BaCO_3$ treatment for radium generate 4.0 MT of sludge per day. This sludge, which contains uranium at levels comparable to a uranium ore, is impounded in a lined basin to minimize potential underground migration of materials via liquid seepage or leaching by natural waters. It is possible that, at some future time, it might be processed to recover uranium, either at the UF_6 plant or at a uranium mill. For the "low-impurity" feed option, the solids contain an estimated 2.4 x 10^{-2} μCi of ^{230}Th and 1.7 x 10^{-3} μCi of ^{226}Ra per gram of waste. These levels are, respectively, 40 and 3 times higher than the levels in the tailings from a typical 0.2% U_3O_8 uranium ore. The assessment for a UF_6 plant feed containing "high" levels of ^{230}Th and ^{226}Ra is also given in Table 4.11; however, this is not expected to be "typical" of UF_6 plant feed. Chemically, the solids are about one-third $CaSO_4 \cdot 2H_2O$, which has a small, but appreciable, water solubility (2.1 g/ℓ as $CaSO_4$[131]) (Table 4.27). Therefore, they are potentially leachable.

Final disposition of the solid radwaste generated by treating the liquid nitrate solvent extraction wastes is at present unclear.[97] Because of the ^{230}Th and ^{226}Ra, these residues (with or without uranium recovery) will require special handling. Final disposal might be in a burial ground or in a mill tailings pile. It seems unlikely that the UF_6 plant impoundment will become the permanent repository,[97] although this would probably be technically feasible. Additional costs and/or radioactive releases may be incurred in disposing of this waste. There will also be: (1) a long-term radon release from the decay of ^{226}Ra in the buried waste, (2) a potential for underground migration of radioactive materials via seepage or leaching if the integrity of the container or liner should fail, and (3) a potential for

windblown dust if the cover should erode. Assessment of these potential impacts at the disposal site is beyond the scope of this study.

The model plant generates 1.7 MT of CaF_2 chemwaste when fluoride-bearing wastes from off-gas scrubbers are combined with lime-treated wastes from solvent extraction. The chemwaste is impounded in a lined basin. These CaF_2 scrubber wastes, which are in a chemically stable, nearly insoluble, nonvolatile form, contain uranium at levels which are only slightly higher than the average concentration in the earth's crust, plus negligible quantities of ^{230}Th and ^{226}Ra (Table 4.11). The case studies do not address final disposal. Fluorspar, the raw material in the manufacture of HF, is an imported mineral which has been escalating rapidly in price. It is possible that, at some future time, the CaF_2 scrubber wastes will be purified and recycled to make HF. No technical or environmental difficulties are anticipated with on-site burial, providing the burial site is situated a reasonable distance away from natural water-courses and above the water table; however, there may be legal restrictions.

SX-F Case 2, solid waste treatment. In Case 2, ammonia neutralization of the solvent extraction wastes generates 1.4 MT of radwaste sludges per day which are impounded with the liquid nitrate waste in lined lagoons. The quantity of radwaste solids in Case 2 is only ∿40% of that in Case 1 because $(NH_4)_2SO_4$ is quite soluble in contrast to the $CaSO_4$ generated in Case 1, which is only slightly soluble. The solids contain about the same total amount of radioactive materials as in Case 1; the concentration per gram is roughly twice the Case 1 concentration. Case 2, like Case 1, does not address final disposal of the radwaste. Additional costs or releases of radioactive materials may be incurred.

The Case 2 treatment system for spent fluoride scrub liquors generates 2.0 MT of CaF_2 chemwaste. This waste, which contains very low levels of radioactive materials (Table 4.11), is kept separate from the solvent extraction wastes. It is impounded in a lined basin as in Case 1. No technical or environmental difficulties are anticipated with on-site burial, providing the site is selected with care.

SX-F Case 3, solid waste treatment. The Case 3 radwaste precipitation system generates about 4.2 MT of sludges per day. These sludges are

centrifuged, washed in the centrifuge to remove some of the sorbed salts, and dried at 280°C. Gypsum ($CaSO_4 \cdot 2H_2O$) and $Al(OH)_3$ lose water of crystallization when heated. The dried product, whose weight is estimated as 3.9 MT, is drummed ready for shipment off-site to an approved burial ground or possibly to a mill for uranium recovery. The chemical composition and activity of the waste are similar to Case 1 (Tables 4.11 and 4.27).

The biological nitrification/denitrification system generates an estimated 7.2 MT of $CaCO_3$ chemwaste and 1.4 MT of biomass on a daily basis. These wastes contain very low levels of radioactive materials. In order to reduce the quantity of chemwaste requiring disposal, they are incinerated and the lime is recovered for recycle. Calcium fluoride scrubber wastes are handled in the same manner as in Case 2.

SX-F Case 4, solid waste treatment. The liquid treatment system employs magnesia to precipitate 2.3 MT of radwaste per day. The purpose is to reduce the quantity of radwaste requiring disposal without using ammonia neutralization, which is incompatible with the nitrate treatment system. The radwaste is cemented as a 15% radwaste—45% cement—40% water mixture and drummed for shipment to an approved burial ground. Cementing the waste provides protection from potential long-term leaching by natural waters and reduces the radon emanation in the event of drum failure. The benefit of cementing the waste will depend on the environment of the disposal area. Shipment and burial costs for the cemented product are not included.

On a daily basis, the nitrate waste system also generates 2.6 MT of $CaSO_4 \cdot 2H_2O$ chemwaste and 0.4 MT of water-soluble chemwaste. The $CaSO_4 \cdot 2H_2O$ waste, which contains radioactive materials at levels expected to be barely distinguishable above the natural background of the lime (Table 4.11), is impounded on-site in a lined basin. No technical or environmental difficulties are anticipated with on-site burial, assuming that the site is selected with care. The water-soluble chemwaste, a mixture of salts such as KNO_3, $NaNO_3$, $MgSO_4$, and $MgCl_2$, is dried and drummed ready for shipment to special (i.e., dry) storage. Costs do not take into account shipping or special storage such as concrete or asphalt-lined vaults.

Calcium fluoride wastes are, in general, handled in a manner similar to that used in Case 2. Contaminated CaF_2 waste is stored separately from uncontaminated waste to avoid liquid releases of radioactive materials via solution sorbed on the moist filter cake. Because of more efficient fluorine utilization within the process and higher HF recovery, the amount of fluoride scrubber wastes in Case 4 is only 0.6 MT per day, or about 30% of that in Cases 1-3. The concentration of uranium in the contaminated fluoride scrubber waste is low (1×10^{-4} μCi/g of U_{nat}); however, it is slightly higher than in Cases 2 and 3 because less CaF_2 diluent is present (Table 4.11). The concentrations of ^{230}Th and ^{226}Ra are negligible.

4.4.15 Radon release

The semirefined yellow cake feed to the UF_6 plant contains a small amount of ^{226}Ra impurity (half-life, 1620 years), which is rejected to the raffinate waste during solvent extraction. This ^{226}Ra decays to ^{222}Rn (half-life, 3.8 days), which is an inert gas and can diffuse through solids and become dispersed into the environment where it decays to a chain of radioactive daughters. In Cases 1 and 2, radon is released from the solvent extraction radwastes that are impounded near the plant. This is analogous to the emanation of radon from the tailings near a uranium mill.[2] In Cases 3 and 4, this source is eliminated at the UF_6 plant by packaging the radwaste in sealed drums ready for shipment off-site. A small amount of radon is also released from the UF_6 plant processes. The estimated radon release from plant processes is 4 to 6 Ci/year for the plant feed containing a "low" level of ^{226}Ra impurity (200 pCi/g U_{nat}); it is ∿300 Ci/year from the model Case 2 midwestern impoundment. In this example, the radon from a 15-year accumulation of liquid and solid wastes contributes 0.06 mrem/year (6%) of the maximum annual individual total-body dose and 2.8 mrem/year (33%) of the lung dose (Sect. 7, Tables 7.4 and 7.4e). Radon source terms for the operating facility are presented in Tables 4.6a-4.6d for the various case studies.

In addition to the radon release from the active UF_6 conversion facility, radon emanation from the wastes will continue for a very long time. It seems unlikely that the UF_6 plant impoundment will become the permanent

repository,[97] although "stabilization" of the solids (i.e., cover them with earth) on-site would be technically feasible. Final disposal of the radium-containing wastes in a licensed low-level burial facility or in a mill tailings pile[97] appears more probable. It is beyond the scope of this survey to assess the long-term radon release from the burial ground.

The assumptions and estimation of the radon source terms for the active facility are discussed in the following sections.

4.4.15.1 Radon release from SX-F plant processes. In general, conservative assumptions which tend to maximize releases are used in estimating radon source terms. A radon emanation coefficient (fraction of the radon that escapes the particles) of unity is assumed for yellow cake;* no credit is taken for holdup within the plant which permits decay (half-life, 3.8 days). Sealed drums are assumed to be tight with only diffusion-controlled releases through the gasket. It is beyond the scope of this survey to estimate leaks from drums. The following examples are for the plant feed containing "low" levels of ^{226}Ra (200 pCi/g U_{nat}), which is representative of current feed. Releases for the "high"-impurity feed would be 7.84 times higher than for the "low"-impurity feed.

Radon release from sampling. The maximum radon release from sampling is estimated as 2.08 Ci/year for the "low-impurity" feed, based on the following assumptions:

1. The yellow cake feed to the plant has aged 1 month or longer in a sealed drum since milling so that the ^{222}Rn has grown back to secular equilibrium with the ^{226}Ra.
2. The secular-equilibrium amount of radon (i.e., 2.00 Ci/year) is released when the drum is opened.
3. A total of 0.08 Ci of radon per year is generated within the plant, based on a residence time in the sampling plant of 8 hr, operation of the sampling plant for two shifts per day for 300 days per year, and no inventory (except sealed drums) when the sampling plant is not operating.

---

*The emanation coefficient of yellow cake has not been measured. The emanation coefficient for the mill tailings is generally in the range 0.09 to 0.2; that is, 9 to 20% of the radon generated escapes from the particles and is free to migrate.[166,167]

4. All the radon generated in the plant is released.

Radon release from yellow cake storage. Godbee and Joy have estimated from diffusion theory that the amount of radon which diffuses through the gasket of sealed drums containing 10,000 MT of uranium, as yellow cake (i.e., a 1-year inventory), is 8 x 10^{-6} Ci/year for the "high-impurity" feed.[168] By extrapolation, the amount released for the "low-impurity" feed would be 1 x 10^{-6} Ci/year. The mathematical model is described in Part I of this study, pp. 98-100.[1]

Radon release from refining and conversion to UF_6. The radon release from refining is estimated as 2.44 Ci/year for the "low-impurity" feed in Cases 1, 2, and 4. This includes one secular-equilibrium release (2.00 Ci/year) of radium when the drums are dumped and 0.44 Ci/year generated within the plant based on a 1-day residence time for radium. In Case 3, the residence time is assumed to be 2 days rather than 1 day to allow for calcining the feed to volatilize ammonia (Sect. 4.4.11.6). The drum-dumping release can be reduced if feed is processed shortly after sampling, that is, before the radon has grown back to secular equilibrium. Some storage time should be allowed for analyses and for blending feed materials to achieve a more uniform chemical reactivity. The assessment assumes that only 0.5% of the radium is extracted with the uranium by TBP (Sect. 4.2.3). Under this condition, the radon release from the conversion of the purified uranyl nitrate solution to UF_6 and from the handling and recycle of the fluorination ash is negligible relative to that from the semirefined yellow cake.

Radon release from radwaste handling, Cases 3 and 4. The advanced case studies include preparation of the radwaste for shipment. The maximum radon release from this operation is estimated as 1.32 Ci/year for the "low-impurity" feed. This is based on a 3-day residence time in waste treatment and a radon emanation coefficient of unity* for the waste. No credit is taken for the fact that wastes are wet during a portion of this time, which would tend to reduce the radon release. The radon diffusion from waste stored in sealed drums awaiting shipment will be very small relative to other sources.

---

*A more realistic radon emanation coefficient of 60% is used for the waste in Sect. 4.4.15.2.

4.4.15.2 Radon release from the active radwaste impoundment. In Cases 1 and 2, the radium-bearing liquid and solid wastes that are generated by solvent extraction and are impounded near the plant are a source of radon. It is assumed that solids are kept wet at all times so that there is no dry beach, which is a major source of radon at uranium mills.[2] Any exposed solids due to fluctuating water levels are sluiced into the pond.

The model uses diffusion theory to estimate the amount of radon that diffuses out of the wet solids into the pond water. The mathematical model for the diffusion calculations is similar to the one used in an earlier study to estimate the radon release from mill tailings covered by the pond.[2] Water is an excellent radon diffusion barrier, and most of the radon generated in the solids decays before it can diffuse to the interface between the sludge and the pond. A radon emanation coefficient of 60% is assumed for the solids by analogy to the radon emanation from the gypsum waste generated by a phosphate fertilizer plant.[168] The model also assumes that the pond is "stirred"; that is, all of the radon diffusing out of the wet sludges into the pond water and all of the radon generated by the decay of the dissolved ^{226}Ra are released to the atmosphere. No credit is taken for the possible decay of radon in the pond. This is a conservative assumption. Those parameters which have a significant effect on the estimated radon release include:

1. the area that is covered by wet sludges;
2. the radium concentration (μCi/g) in the sludges (from Sect. 4.4.11 and Table 4.11);
3. the total quantity of radium dissolved (or suspended) in the pond water, which depends on the quantity of waste accumulated and the treatment for radium.

The total accumulation of solids affects the assessment only indirectly through the area.

Estimates of the radon release from the wet sludges and liquid wastes in the Case 1 and Case 2 impoundments are presented in Table 4.42. In Case 1, it is assumed that lime-precipitated, radwaste sludges cover an

area of 13,000 m^2 (3.3 acres), and that the $BaCO_3$-treated liquid waste is released after the solids have been allowed to settle. Under these conditions, the radon release from the wet sludges is estimated as about 20 Ci/year for the "low-impurity" feed option. This would be near the end of the life of the facility, which is estimated as ∿30 years. During the first year of operation, only ∿60% of the surface of the impoundment would be covered with sludge and the radon release would be proportionately smaller. Impoundment of $BaCO_3$-treated liquid wastes for as long as 1 year to permit controlled release to a surface stream has little effect (0.1 Ci of ^{222}Rn per year) on the assessment.

In Case 2, the solvent extraction wastes are neutralized with ammonia and both the liquid and solids are impounded; no $BaCO_3$ treatment is included to precipitate radium. The radwaste sludges are confined to the first lagoon, which serves as a settling basin, and are not spread over the entire evaporation area. Because ammonia precipitation generates a smaller quantity of sludge, the radium concentration in the solids is higher than in Case 1; therefore, the radon emanation per unit area is higher. For the model Case 2 midwestern impoundment, "low"-impurity feed option, the annual ^{222}Rn release from 28,800 m^2 (7.1 acres) of wet, ammonia-precipitated sludge is estimated as 107 Ci and that from a 15-year accumulation of liquid wastes is estimated as ∿200 Ci (Table 4.42). In this example, the radon from the impounded wastes contributes 0.06 mrem/year (6%) of the maximum annual individual total-body dose and 2.7 mrem/year (33%) of the lung dose (Sect. 7, Tables 7.4 and 7.4e) at 800 m (0.5 mile). In the unlikely event that the model plant should process the "high"-impurity feed, the estimated ^{222}Rn release from a 15-year accumulation of liquid and solid wastes is 2400 Ci/year, and the maximum annual individual dose to the lungs from the impoundment and the process effluents combined using Case 2 level treatment is 28 mrem (Table 7.20). This would not meet the 40 CFR 190 environmental standards at some sites. For comparative purposes, Table 4.42 also presents the estimated radon release from a Case 2-like impoundment if $BaCO_3$ treatment to precipitate radium is applied. (However, this is not part of the case study.) For the "high"-impurity feed option, application of $BaCO_3$ treatment to remove 99.8% of the soluble radium would

reduce the ^{222}Rn release from 2400 Ci/year to 560 Ci/year. The $BaCO_3$ treatment is not needed for radon control with the "low"-impurity feed, which is representative of current plant feeds.

4.5 References

1. M. B. Sears, R. E. Blanco, B. C. Finney, G. S. Hill, R. E. Moore, and J. P. Witherspoon, Correlation of Radioactive Waste Treatment Costs and the Environmental Impact of Waste Effluents in the Nuclear Fuel Cycle — Conversion of Yellow Cake to Uranium Hexafluoride. Part I. The Fluorination-Fractionation Process, ORNL/NUREG/TM-7 (September 1977).

2. M. B. Sears, R. E. Blanco, R. C. Dahlman, G. S. Hill, A. D. Ryon, and J. P. Witherspoon, Correlation of Radioactive Waste Treatment Costs and the Environmental Impact of Waste Effluents in the Nuclear Fuel Cycle for Use in Establishing "As Low As Practicable" Guides — Milling of Uranium Ores, ORNL-TM-4903, Vol. 1 (May 1975).

3. Kerr-McGee Corporation, Applicants Environmental Report Sequoyah Uranium Hexafluoride Production Plant, DOCKET 40-8027, Suppl. 1 (June 1972), pp. 39-53.

4. W. C. Ruch, D. A. Peterson, E. A. Gaskill, and H. G. Tepp, "Production of Pure Uranium Hexafluoride from Ore Concentrates," Chem. Eng. Prog., Symp. Ser. 56(28), 35-41 (1960).

5. C. D. Harrington and A. E. Ruehl, Uranium Production Technology, pp. 146-80, Van Nostrand, Princeton, N.J., 1959.

6. E. W. Mautz, Production of Uranium Tetrafluoride and Uranium Metal, National Lead Company, NLCO-1068 (Apr. 23, 1970).

7. R. M. Berry, "Eldorado's Port Hope Refinery - 1969," Can. Inst. Min. Metall. Bull. 62(690), 1093-99 (1969).

8. H. Page, L. P. Shortis, and J. A. Dukes, "The Processing of Uranium Ore Concentrates and Recycle Residues to Purified Uranyl Nitrate Solution at Springfields," Trans. Inst. Chem. Eng. 38(4), 184-96 (1960).

9. E. Hawthorn, J. P. Shortis, and J. E. Lloyd, "The Fluidized Solids Dryway Process for the Production of Uranium Tetrafluoride at Springfields," Trans. Inst. Chem. Eng. 38(4), 197-207 (1960).

10. R. C. Alexander, L. P. Shortis, and C. J. Turner, "The Second Uranium Plant at Springfields," Trans. Inst. Chem. Eng. 38(4), 177-83 (1960).

11. M. Blavillain, "La raffinage de l'uranium al'usine de Malvesi," Bull. Inf. Sci. Tech. 80, 69-85 (1964).

12. W. Haegi, L. Verot, and J. Muller, "Realisations industrielles pour la fabrication de tetrafluorine d'uranium par le precede francais de 'reduction-fluorination' en 'lit coulant' (fours L.C.)". Energ. Nucl. 10, 152-59 (1968).

13. C. A. Powell, "Current Manufacturing Processes Used in the United States for Mass Production of UF_6 from Purified UO_3," Paper P/1840, Proc. U.N. Intern. Conf. Peaceful Uses At. Energy, Geneva, 2nd 4, 165-71 (1958).

14. J. G. Crawford, Fluorination of All Enrichments of Uranium Oxides, GAT-P-43, Goodyear Atomic Corp. (June 24, 1968).

15. A. D. Riley (Plant Manager, Allied Chemical UF_6 plant), J. H. Thomas (Technical Superintendent), and R. W. Yates, (Health Physicist), personal communication to M. B. Sears, Nov. 13, 1974.

16. J. W. Rothfleisch (NRC), personal communication to J. W. Roddy (ORNL), Feb. 7, 1978.

17. Grand Junction Office of the USAEC, Statistical Data of the Uranium Industry, GJO-100(77) (Jan. 1, 1977), p. 105.

18. R. W. Yates (Health Physicist, Allied Chemical Metropolis UF_6 Plant), personal communication to M. B. Sears (ORNL), Mar. 29, 1977.

19. National Lead Company, January 1960 - Summary Report, WIN-112, Winchester Laboratory (Feb. 1, 1960), pp. 6-14, 53-55.

20. E. C. Tsivoglou and R. L. O'Connell, Waste Guide for the Uranium Milling Industry, Technical Report W62-12, U.S. Public Health Service, R. A. Taft Sanitary Engineering Center, Cincinnati, Ohio (1962), pp. 28-31.

21. J. H. Cavendish and G. Briggs (Production Technology Department, National Lead Company of Ohio), personal communication to M. B. Sears, Nov. 12, 1974.

22. B. Brown (Plant Manager, Kerr-McGee Sequoyah UF_6 Production Facility), J. Craig (Engineering Manager, Kerr-McGee Sequoyah UF_6 Production Facility), and M. Walling (Kerr-McGee Corporation), personal communication to M. B. Sears, Oct. 15, 1974.

23. C. D. Harrington and A. E. Ruehl, Uranium Production Technology, pp. 14-36, Van Nostrand, Princeton, N.J., 1959.

24. C. J. Stairmand, "Removal of Dust from Gases," pp. 364-402 in Processes for Air Pollution Control, 2nd ed., G. Nonhebel (Ed.), The Chemical Rubber Co., Cleveland, Ohio, 1972.

25. C. J. Stairmand, "Removal of Grit, Dust, and Fume from Exhaust Gases from Chemical Engineering Processes," The Chemical Engineer 194, CE310-26 (December 1965).

26. G. D. Sargent, "Dust Collection Equipment," Chem. Eng. 76(2), 130-50 (Jan. 27, 1969).

27. K. J. Caplan and M. G. Mason, "Efficiency of Reverse-Jet Filters on Uranium Refining Operations," pp. 77-85 in Air Cleaning Seminar, Ames Laboratory, Sept. 15-17, 1952, WASH-149 (March 1954).

28. R. Johnson (Lucius Pitkin Co., Metropolis, Ill.), personal communication to M. B. Sears, Dec. 12, 1974.

29. J. Craig (Engineering Manager, Kerr-McGee Sequoyah UF_6 Production Facility, Okla.), personal communication to M. B. Sears, Oct. 16, 1974.

30. J. Thomas (Technical Superintendent, Allied Chemical UF_6 Plant, Metropolis, Ill.), personal communication to M. B. Sears, Nov. 13, 1974.

31. Pall Trinity Micro Corporation (Cortland, N.Y.), "Sintered Stainless Steel Filters and Other Porous Metals," Bulletin M201 (1967), p. 4.

32. K. J. Caplan, "High Efficiency Collection of Radioactive Dust," Heat. Vent. 48, 74-82 (1951).

33. C. A. Burchsted and A. B. Fuller, Design, Construction, and Testing of High-Efficiency Air Filtration Systems for Nuclear Application, ORNL-NSIC-65 (January 1970), p. 3.1.

34. N. Hetland and J. L. Russell, Jr., "Adequacy of Ventilation Exhaust Filtering System for New Plutonium Facilities," pp. 619-36 in Proceedings of the Twelfth AEC Air Cleaning Conference Held in Oak Ridge, Tennessee, August 28-31, 1972, M. W. First (Ed.), CONF-72823, Vol. 2 (January 1973).

35. C. A. Burchsted, ORNL, personal communication to M. B. Sears, Feb. 13, 1975.

36. W. L. Belvin, M. A. Krimmel, H. C. Schwalbe, and E. N. Gleaton, Development of New Fluoride Resistant HEPA Filter Medium, Final Report, TID-26649, HERTY Foundation, Savannah, Ga. (Aug. 19, 1975), pp. 3-5.

37. F. J. G. Kwanten and J. Hurshamp, "Gas Absorption Towers," pp. 77-164 in Processes for Air Pollution Control, 2nd ed., G. Nonhebel (Ed.), The Chemical Rubber Co., Cleveland, Ohio, 1972.

38. W. L. Faith and A. A. Atkisson, Jr., Air Pollution, 2nd ed., p. 179, Wiley-Interscience, New York, 1972.

39. S. K. Kempner, E. N. Seiler, and D. H. Bowman, "Performance of Commercially Available Equipment in Scrubbing Hydrogen Chloride Gas," J. Air Pollut. Control Assoc. 20(3), 139-43 (1970).

40. L. S. Harris, "Fume Scrubbing with the Ejector Venturi System," Chem. Eng. Prog. 62(4), 55-59 (April 1966).

41. American Air Filter Company (Louisville, Ky.), "Kinpactor Kinetic Scrubber," AA Bulletin No. 266 (October 1968).

42. C. E. Billings, C. K. Kurker, Jr., and L. Silverman, "Simultaneous Removal of Acid Gases, Mists, and Fumes with Mineral Wool Filters," J. Air Pollut. Control Assoc. 8(3), 191-94 (November 1958).

43. A. J. Story, Disposal of Hydrogen Fluoride and Fluorine by Gas-Liquid Dispersion Scrubbing, KY-666 (Sept. 15, 1975).

44. C. J. Stairmand, "The Design and Performance of Modern Gas-Cleaning Equipment," J. Inst. Fuel 29(181), 58-81 (1956).

45. P. J. Hoftyzer and F. J. G. Kwanten, "Absorption of Nitrous Gases," pp. 164-87 in Processes for Air Pollution Control, 2nd ed., G. Nonhebel (Ed.), The Chemical Rubber Co., Cleveland, Ohio, 1972.

46. B. J. Mayland and R. C. Heinze, "Continuous Catalytic Absorption for NO_x Emission Control," Chem. Eng. Prog. 69(5), 75 (1973).

47. D. S. Arnold, A. Whitman, and F. J. Podlipec, "Nitric Acid Recovery from Raffinate by Evaporation and Fractional Distillation," Chem. Eng. Prog. 52, 362-65 (1956).

48. F. G. Walters, F. W. Winn, and H. H. Bulkowski, Process Engineering Report on the Effect of Chloride on the Design and Operation of Nitric Acid Recovery Facilities, NYO-1182, Catalytic Construction Company (Oct. 15, 1953), p. 28.

49. E. R. Johnson and E. O. Rutenkroger, Fluoride Volatilization During Nitric Acid Recovery from Solvent Extraction Raffinates - Laboratory Investigation, NLCO-576 (May 1, 1955).

50. R. M. Davis, E. G. Laggis, and I. W. Jeter (Union Carbide Oak Ridge Y-12 Plant), internal memorandum (Apr. 1, 1977).

51. W. H. Pechin, R. E. Blanco, R. C. Dahlman, B. C. Finney, R. B. Lindauer, and J. P. Witherspoon, Correlation of Radioactive Waste Treatment Costs and the Environmental Impact of Waste Effluents in the Nuclear Fuel Cycle for Use in Establishing "As Low As Practicable" Guides - Fabrication of Light-Water Reactor Fuel from Enriched Uranium Dioxide, ORNL-TM-4902 (May 1975).

52. A. P. Hubber, J. Dykstra, and B. H. Thompson, "Multi-ton Production of Fluorine for Manufacture of Uranium Hexafluoride," Paper P/524, Proc. U.N. Intern. Conf. Peaceful Uses At. Energy, Geneva, 2nd 4, 172-80 (1958).

53. S. Lawroski, A. A. Jonke, N. Levitz, E. J. Petkus, A. H. F. Litty, W. A. Rodger, G. J. Vogel, R. K. Steunenberg, O. Sanders, W. J. Mecham, R. C. Leiimatainen, R. W. Kessie, L. Trevorrow, and R. C. Vogel, "Production of Refined UF_6 from Ore Concentrates by Fluidization and Fractional Distillation Techniques," P/1552, Proc. U.N. Intern. Conf. Peaceful Uses At. Energy, Geneva, 2nd 4, 44-57 (1958).

54. AEC Regulatory Guide 3.13, Guide for Acceptable Waste Storage Methods at UF_6 Production Plants, U.S. Atomic Energy Commission, Directorate of Regulatory Standards, Washington, D.C. (October 1973).

55. United States Department of the Army, Corps of Engineers, Manual E.M.-110-1-1902, Engineering and Design Stability of Earth and Rock Fill Dams, Department of the Army, Office of the Chief of Engineers, Washington, D.C. (Apr. 1, 1970).

56. W. F. Linke, Solubilities, Vol. I, 4th ed., p. 622, Van Nostrand, Princeton, N.J., 1958.

57. Kerr-McGee Corporation, Applicants Environmental Report Sequoyah Uranium Hexafluoride Production Plant, Supplement No. 3, DOCKET 40-8027 (August 1973), p. 4.

58. Air, Water, Inorganic Chemicals, and Nucleonics, Vol. 1 of Chemical Technology: An Encyclopedic Treatment, pp. 318-22, Barnes and Noble, Inc., New York, 1968.

59. K. H. Lanovette, "Heavy Metals Removal," Chem. Eng. 84(22), 73-80 (Oct. 17, 1977).

60. A. F. Pennak, Radioactive Waste Management Plan, Revision 1, NLCO-1100 (Rev. 1) (Special), National Lead Company of Ohio (June 17, 1974), pp. 15-17, 45.

61. M. B. Sears, R. E. Blanco, R. C. Dahlman, G. S. Hill, A. D. Ryon, and J. P. Witherspoon, Correlation of Radioactive Waste Treatment Costs and the Environmental Impact of Waste Effluents in the Nuclear Fuel Cycle for Use in Establishing "As Low As Practical" Guides - Milling of Uranium Ores, ORNL-TM-4903, Vol. 1 (May 1975), pp. 241-43.

62. R. G. Beverly, "Unique Disposal Methods Are Required for Uranium Mill Waste," Min. Eng. 20, 52 (1968).

63. R. G. Beverly (Director of Environmental Control, Union Carbide Corp., Grand Junction, Colo.), personal communication to M. B. Sears, Apr. 6, 1973.

64. National Lead Company, January 1960 Summary Report, WIN-112, Winchester Laboratory (Feb. 1, 1960), pp. 13-14.

65. H. Pulley, "Fluoride and Nitrogen Oxide Removal from Fuel Cycle Operations," p. 5-3 in Proceedings of Controlling Airborne Effluents from Fuel Cycle Plants, Topical Meeting, sponsored by the American Nuclear Society and the American Institute of Chemical Engineers, Sun Valley, Idaho, Aug. 5-7, 1976.

66. E. G. Paulson, "Reducing Fluoride in Industrial Wastewater," Chem. Eng. 84, 89-94 (Oct. 17, 1977).

67. R. W. Yates (Health Physicist, Allied Chemical UF_6 Plant), personal communication to M. B. Sears, Aug. 26, 1976.

68. U.S. Environmental Protection Agency, Technology Transfer, "Process Chemistry and Biochemistry of Nitrification and Denitrification," Chap. 3 in Process Design Manual for Nitrogen Control (October 1975), pp. 3-1 to 3-15, 3-33 to 3-41, 4-86 to 4-88.

69. H. A. Painter, "A Review of Literature on Inorganic Nitrogen, Metabolism in Microorganisms," Water Res. 4, 393-450 (1970).

70. T. J. Mulligan and R. D. Fox, "Treatment of Industrial Wastewaters," Chem. Eng. 83(22), 50-54 (Oct. 18, 1976).

71. P. L. McCarty, L. Beck, and P. St. Amant, "Biological Denitrification of Wastewaters by Addition of Organic Materials," in Proc. of the 24th Industrial Waste Conference, May 6, 7, and 8, Lafayette, Indiana, Purdue University, 1969.

72. C. W. Hancher (ORNL), personal communication to M. B. Sears (ORNL), Sept. 7, 1978.

73. J. M. Napier, An Operational Guide to the Y-12 Denitrification Facility, Y-DA-6720, Union Carbide, Oak Ridge Y-12 Plant (Mar. 23, 1976).

74. A. H. Ross (A. H. Ross and Associates, Toronto, Canada), personal communication to K. B. Brown (ORNL), Oct. 6, 1975.

75. W. W. Wendlandt, "The Thermal Decomposition of Inorganic Compounds II. Metal Nitrates," Texas J. Sci., 10, 392-98 (1958).

76. S. Gordon and C. Campbell, "Differential Thermal Analysis of Inorganic Compounds, Nitrates and Perchlorates of the Alkali and Alkaline Earth Groups and Their Subgroups," Anal. Chem. 27, 1102-9 (July 1955).

77. D. S. Arnold, J. S. Cavendish, H. C. Heareth, and W. C. Manser, "Drying and Calcining of Raffinate from Uranyl Nitrate Extraction," Chem. Eng. Prog. Symp. Ser., Pt. 9, 58, 1-7 (1962).

78. C. D. Harrington and A. E. Ruehle, Uranium Production Technology, pp. 158-62, Van Nostrand, Princeton, N.J., 1959.

79. Alternatives for Managing Wastes from Reactors and Post-Fission Operations in the LWR Fuel Cycle, ERDA-76-43, Vol. 2, United States Energy Research and Development Administration (May 1976), pp. 6.1-6.99.

80. R. E. Commander, G. E. Lohse, D. E. Black, and E. D. Cooper, Operation of the Waste Calcining Facility with Highly Radioactive Aqueous Waste, IDO-14622, Phillips Petroleum Company (June 1966).

81. G. E. Lohse and M. P. Hales, Second Processing Campaign in the Waste Calcining Facility, IN-1344, Idaho Nuclear Corporation (March 1970).

82. B. J. Newby, "Decomposition Characteristics of Simulated PW-6 Commercial Waste," pp. 89-101 in Idaho Chemical Programs Annual Technical Report Fiscal Year 1974, TID-4500, Allied Chemical Corporation (January 1975).

83. S. S. Bodner and W. A. Freeby, "Calcination of Simulated Neutralized Waste," pp. 101 in Idaho Chemical Programs Annual Technical Report Fiscal Year 1974, TID-4500, Allied Chemical Corporation (January 1975).

84. W. A. Freeby, Interim Report: Fluidized-Bed Calcination of Simulated High-Level Commercial Wastes, ICP-1075 (June 1975).

85. R. C. Merritt, The Extractive Metallurgy of Uranium, p. 253, Colorado School of Mines Research Institute, Golden, Colo., 1971.

86. U.S. Environmental Protection Agency, Technology Transfer, "Air Stripping for Nitrogen Removal," Chap. 8 in Process Design Manual for Nitrogen Control, (October 1975), pp. 8-1 to 8-21.

87. C. B. Goodlett, "Wiped-Film Evaporators for Evaporating Alkaline LWR Radioactive Wastes," presented at the American Nuclear Society Meeting, Savannah, Ga., Mar. 19-22, 1978.

88. J. M. Napier, G. B. Marrow, F. E. Clark, and P. Taylor (DOE Y-12 Plant), personal communication to M. B. Sears, Feb. 4, 1975.

89. F. E. Bernardin, Jr., "Selecting and Specifying Activated-Carbon-Adsorption Systems," Chem. Eng. 83, 77-82 (Oct. 18, 1976).

90. "New Developments in Activated Carbon Weighed," pp. 17-18 in Chem. Eng. News (Oct. 2, 1978).

91. K. Masters, "Spray Drying, the Unit Operation Today," Ind. Eng. Chem. 60(10), 53-62 (October 1962).

92. J. Turba and J. Nemeth, "Atomizing and Spray Drying of Paste-Like Materials," Brit. Chem. Eng. 9, 457-60 (July 1964).

93. J. A. Duffie and W. R. Marshall, "Factors Influencing the Properties of Spray-Dried Materials," Chem. Eng. Prog. 49, 480-86 (September 1953).

94. H. W. Godbee (ORNL), personal communications to B. C. Finney and M. B. Sears (Sept. 9 and Sept. 29, 1975).

95. M. G. Warwick, "Incineration of Sewage Sludges on the Multiple Hearth Furnace," Effluent Water Treat. J. 14, 685-92 (1974).

96. D. S. Parker, G. A. Carthew, and G. A. Horstkotte, "Lime Recovery and Reuse in Primary Treatment," J. Environ. Eng. Div., Proc. Amer. Soc. Civ. Eng. 101, 985-1005 (1975).

97. U.S. Nuclear Regulatory Commission, Final Environmental Statement Related to the Sequoyah Uranium Hexafluoride Plant, DOCKET No. 40-8027, NUREG-75/007 (February 1975), pp. III-9 to III-12, IX-4 to IX-7.

98. J. T. Krieg and G. B. Wells, "Factors Affecting the Digestion of Ore Concentrates," Process Development Quarterly Report Part II - Pilot Plant Work, MCW-1404, Mallinckrodt Chemical Works (Aug. 1, 1975), p. II-17.

99. C. W. Huntington, Refining of Thorium Containing Uranium Concentrates by Extraction with Tributyl Phosphate, NLCO-692, National Lead Co. (Aug. 29, 1957).

100. J. A. Kennelley, G. L. Martin, and S. W. Weidman, "The Effect of Anionic Impurities on the Distribution of Uranium Between Diethyl Ether and Aqueous Nitrate Solutions," pp. III-27 to III-32 in Process Development Quarterly Report Part I, MCW-1397, Mallinckrodt Chemical Works (Oct. 1, 1956).

101. J. T. Krieg, R. H. Fariss, J. A. Soukeep, and D. J. Nerrow, "Pilot Plant Testing of a Low Acid Flowsheet for the TBP-Hexane Extraction Process," p. 57 in Process Development Quarterly Report Part II - Pilot Plant Work, MCW-1402, Mallinckrodt Chemical Works (May 1, 1975).

102. W. C. Philoon, R. M. Edwards, and R. H. Farris, Development of the TBP-Hexane Process for Uranium Purification, MCW-1441, Mallinckrodt Chemical Works (Feb. 1, 1960).

103. C. D. Harrington and A. E. Ruehle, Uranium Production Technology, pp. 181-91, Van Nostrand, Princeton, N.J., 1959.

104. M. J. Szulinski, "Development of an Agitated Trough Continuous Calciner," Chem. Eng. Prog. 53, 586-89 (1957).

105. C. D. Harrington and A. E. Ruehle, Uranium Production Technology, pp. 192-213, Van Nostrand, Princeton, N.J., 1959.

106. D. C. Brater, C. C. Littlefield, J. H. Pashley, and S. H. Smiley, Preparation of High Productivity Uranium Dioxide by Fluid Bed Reduction, K-1329, Union Carbide Nuclear Co. (Aug. 20, 1957).

107. A. H. Sutton, J. C. Bishop, M. H. Cohen, and K. J. Stahman, "Reduction and Hydrofluorination of Uranium Concentrates by Fluid Bed Techniques," Chem. Eng. Prog. Symp. Ser., Pt. 15, 62, 22-30 (1966).

108. S. H. Smiley and D. C. Brater, "The Development of a High Capacity, Continuous Process for the Preparation of Uranium Hexafluoride from Uranium Oxides and Ore Concentrates," Paper P/525, Proc. U.N. Intern. Conf. Peaceful Uses At. Energy, Geneva, 2nd 4, 153-64 (1958).

109. H. Stephen and T. Stephen, Solubilities of Inorganic and Organic Compounds, Vol. I, "Binary Systems," Part 1, p. 335, Macmillan, New York, 1963.

110. C. D. Harrington and A. E. Ruehle, Uranium Production Technology, pp. 214-44, Van Nostrand, Princeton, N.J., 1959.

111. D. C. Brater, D. L. Castro, L. A. Dean, J. H. Pashley, and S. H. Smiley, "Development and Production Experience with Mechanically Agitated Fluid Beds as Applied to the Hydrofluorination of Fine Uranium Oxide Powders," Chem. Eng. Prog. Symp. Ser., Pt. 15, 62, 1-11 (1966).

112. S. H. Smiley, "Gas-Solid Reactors in Uranium Processing: A Critical Review," pp. 223-41 in Progress in Nuclear Energy, Series IV, Technology, Engineering, and Safety, Vol. 4, C. M. Nicholls (Ed.), Pergamon, New York, 1961.

113. Allied Chemical Corporation, Application for Renewal of AEC Source Material License No. SUB-526, Attachment No. 3, DOCKET 40-3392 (Dec. 12, 1972).

114. S. H. Smiley, "Gas-Solid Reactors in Uranium Processing: A Critical Review," pp. 241-62 in Progress in Nuclear Energy, Series, IV. Technology, Engineering and Safety, Vol. 4, C. M. Nicholls (Ed.), Pergamon, New York, 1961.

115. C. D. Harrington and A. E. Ruehle, Uranium Production Technology, pp. 100-6, 146-80, Van Nostrand, Princeton, N.J., 1959.

116. S. H. Smiley, D. C. Brater, C. C. Littlefield, and J. H. Pashley, "Quantitative Recovery of Uranium Hexafluoride from a Process Gas Stream," Ind. Eng. Chem. 51(2), 191-96 (1959).

117. W. R. Pedigo, C. R. King, L. A. Dean, J. W. Owen, and S. Bernstein, "Fluidized Bed Recovery of Fluorine in the Manufacture of UF_6," Chem. Eng. Prog. Symp. Ser., Pt. 15, 62, 12-19 (1966).

118. J. L. Powell, W. R. Foreshee, and S. Bernstein, "Recovery of Uranium Hexafluoride Vapors," Ind. Eng. Chem. 51, 919-20 (1959).

119. J. A. Connor and E. A. V. Ebsworth, "Peroxy Compounds of Transition Metals," pp. 345-58 in Advances in Inorganic Chemistry and Radiochemistry, H. J. Emeleus and A. G. Sharpe (Eds.), Vol. 6, Academic, New York, 1964.

120. F. A. Cotton and G. Wilkinson, Advanced Inorganic Chemistry, 3rd ed., Interscience, pp. 416-17, Wiley, New York, 1972.

121. M. B. Sears, R. E. Blanco, R. C. Dahlman, G. S. Hill, A. D. Ryon, and J. P. Witherspoon, Correlation of Radioactive Waste Treatment Costs and the Environmental Impact of Waste Effluents in the Nuclear Fuel Cycle for Use in Establishing "As Low As Practicable" Guides - Milling of Uranium Ores, ORNL-TM-4903, Vol. 1 (May 1975), pp. 24, 123, 173, 241.

122. C. D. Harrington and A. E. Ruehle, Uranium Production Technology, pp. 468-72, Van Nostrand, Princeton, N.J., 1959.

123. U.S. Environmental Protection Agency, Technology Transfer, "Nitrogenous Materials in the Environment and the Need for Control in Wastewater Effluents," Chap. 2 in Process Design Manual for Nitrogen Control (October 1975), pp. 2-1 to 2-16.

124. S. C. Lind, J. E. Underwood, and C. F. Whittemore, "The Solubility of Pure Radium Sulfate," J. Am. Chem. Soc. 40, 465-72 (1918).

125. D. J. Crouse and F. G. Seeley, "Separation of Radium from Ore Tailings," pp. 378-83 in Chemical Development Section B Semiannual Progress Report March 1, 1973 to Aug. 31, 1973, ORNL-TM-4370 February 1974).

126. A. D. Ryon, F. J. Hurst, and F. G. Seeley, Nitric Acid Leaching of Radium and Other Significant Radionuclides from Uranium Ores and Tailings, ORNL/TM-5944 (August 1977), pp. 18-20.

127. G. P. Lang, E. N. Nelson, and C. W. Kuhlman, A Process for Controlling Insoluble Uranium in Ore Concentrates, MCW-1420, Mallinckrodt Chemical Works (Feb. 2, 1959), p. 13.

128. W. L. Lennemann and F. E. McGinley, "Advances in Uranium Ore Processing," Min. Congr. J. 45(7), 59-63 (1959).

129. D. F. Lillie, W. J. Dengler, and I. C. Edwards, "Two Years Milling at Bicroft Uranium Mines, Ltd.," Trans. AIME 220, 456-68 (1961).

130. U.S. Environmental Protection Agency, Title 40, Code of Federal Regulations, Part 141, "National Interim Primary Drinking Water Standards," Fed. Regist. 40(248), 59566-70 (Dec. 24, 1975).

131. W. F. Linke, Solubilities, Vol. I, 4th ed., p. 660, Van Nostrand, Princeton, N.J., 1958.

132. Ibid., pp. 622-23.

133. U.S. Environmental Protection Agency, Technology Transfer, "Air Stripping for Nitrogen Removal," Chap. 8 in Process Design Manual for Nitrogen Control (October 1975), pp. 8-17 to 8-19.

134. S. E. Shumate II, G. W. Strandberg, and J. R. Parrott, Jr., "Biological Removal of Metal Ions from Aqueous Process Streams," presented at the Symposium on Biotechnology in Energy Production and Conservation, Gatlinburg, Tenn., May 10-12, 1978.

135. S. E. Shumate II, C. W. Hancher, G. W. Strandberg, and C. D. Scott, "Biological Processes for Environmental Control of Effluent Streams in the Nuclear Fuel Cycle," presented at the Waste Management and Fuel Cycles '78 Symposium, Tucson, Ariz., Mar. 5-8, 1978.

136. C. W. Frances and J. B. Mankin, " High Nitrate Denitrification in Continuous Flow-Stirred Reactors," Water Res. 11, 289-94 (1977).

137. C. W. Hancher, P. A. Taylor, and J. M. Napier, "Operation of a Fluidized-Bed Bioreactor for Denitration," presented at the Symposium on Biotechnology in Energy Production and Conservation, Gatlinburg, Tenn., May 10-12, 1978.

138. A. C. Anthonisen, R. C. Loehr, T. B. S. Prakasam, and E. G. Srinath, "Inhibition of Nitrification by Ammonia and Nitrous Acid," J. Water Pollut. Control Fed. 48, 835-52 (1976).

139. W. Verstraete, H. Vanstaen, and J. P. Voets, "Adaptation to Nitrification of Activated Sludge Systems Treating Highly Nitrogenous Waters," J. Water Pollut. Control Fed. 49, 1604-8 (1977).

140. T. P. O'Farrell and D. F. Bishop, "Lime Precipitation in Raw, Primary, and Secondary Wastewater," AIChE Symp. Ser. 68(124), 43-55 (1972).

141. G. A. Horstkotte, D. G. Niles, D. S. Parker, and D. H. Caldwell, "Full-Scale Testing of a Water Reclamation System," J. Water Pollut. Control Fed. 46, 181-97 (1974).

142. U.S. Environmental Protection Agency, Office of Technology Transfer, "Total System Design, Central Contra Costa Sanitary District," pp. 9-25 to 9-39 in Process Design Manual for Nitrogen Control (October 1975).

143. J. A. Heidman, D. F. Bishop, and J. B. Stamberg, "Carbon, Nitrogen, and Phosphorus Removal in Staged Nitrification-Denitrification Activated Sludge Treatment," pp. 273-75 in Water - 1974: II. Municipal Wastewater Treatment, G. F. Bennett (Ed.), AIChE Symp. Ser. 71(145) (1975).

144. G. M. Wong-Chong and R. C. Loehr, "Kinetics of Microbial Nitrification as Applied to the Treatment of Animal Waste-Ammonium-Nitrogen Oxidation," pp. 70-79 in Water - 1974: II. Municipal Wastewater Treatment, G. F. Bennett (Ed.), AIChE Symp. Ser. 71(145), 1975.

145. H. E. Wild, Jr., C. N. Sawyer, and T. C. McMahon, "Factors Affecting Nitrification Kinetics," J. Water Pollut. Control Fed. 43, 1845-54 (1971).

146. R. H. Fariss, J. T. Krieg, C. S. Powell, and J. A. Soukup, "Pilot Plant Operation of a TBP-Hexane Extraction Cycle for Purification of Uranyl Nitrate," p. II-47 in Process Development Quarterly Report, Part II, MCW-1398, Mallinckrodt Chemical Works (Nov. 1, 1966).

147. J. H. Sherrard and E. D. Schroeder, "Cell Yield and Growth Rate in Activated Sludge," J. Water Pollut. Control Fed. 45, 1889-97 (1973).

148. D. D. McHarness, R. T. Haug, and P. L. McCarty, "Field Studies of Nitrification with Submerged Filters," J. Water Pollut. Control Fed. 47, 291-308 (February 1975).

149. American Society of Civil Engineers and the Water Pollution Control Federation, Sewage Treatment Plant Design, WPCF Manual of Practice No. 8 (ASCE Manual of Engineering Practice No. 36), pp. 135-39 (1959).

150. E. E. Lockhart, C. L. Tucker, and M. C. Merritt, "The Effect of Water Impurities on the Flavor of Brewed Coffee," Feed Res. 20, 598-605 (1955), as quoted by Public Health Service Drinking Water Standards, Revised 1962, Public Health Service Publication No. 956, p. 36.

151. G. L. Christensen, W. R. Elliott, and W. K. Johnson, "Interactions Between Sludge Conditioning, Vacuum Filtration, and Incineration," J. Water Pollut. Control Fed. 48, 1955-69 (1976).

152. C. M. Thomas, "Solids Disposal - Conclusion," Effluent Water Treat. J. 15, 26 (1975).

153. Eldorado Nuclear, Limited, The Port Granby Project: Environmental Impact, [Abstract of the "Environmental Impact Statement" which was given to A. D. Ryon (ORNL) during a tour of the Port Hope refinery in the fall of 1977].

154. R. C. Merritt, The Extractive Metallurgy of Uranium, p. 420, Colorado School of Mines Research Institute, Golden, Colo., 1971.

155. Ibid., pp. 83-97.

156. Ibid., pp. 247-250.

157. Ibid., pp. 395.

158. T. R. Beck (Assistant to the Manager, The Anaconda Company), personal communication to M. B. Sears, Apr. 9, 1973.

159. W. F. Linke, Solubilities, Vol. II, 4th ed., p. 524, Van Nostrand, Princeton, N.J., 1965.

160. Chemical Technology: An Encyclopedic Treatment, Vol. I, p. 321, Barnes and Noble, New York, 1958.

161. T. G. Reeves, "Nitrogen Removal," J. Water Pollut. Control Fed. 44, 1895-1908 (1972).

162. W. F. Linke, Solubilities, Vol. II, 4th ed., p. 511, Van Nostrand, Princeton, N.J., 1965.

163. C. D. Harrington and A. E. Ruehl, Uranium Production Technology, pp. 42-46, Van Nostrand, Princeton, N.J., 1965.

164. A. Benrath, "Uber das reiziproke Salzpaar $MgSO_4$-$Na_2(NO_3)_2$-H_2O I.," Z. Anorg. Chem. 170, (1928).

165. W. C. Barber, "Controversy Plagues Setting Environmental Standards," Chem. Eng. News, pp. 34-37 (Apr. 23, 1979).

166. M. V. J. Culot, H. G. Olson, and K. J. Schiager, Radon Progeny Control in Buildings, Final Report on EPA Grant R01 EC00153 and AEC Contract (11-1)-2273, Colorado State University, Fort Collins. Colo. (May 1973), pp. 51-55.

167. A. D. Ryon, F. J. Hurst, and F. G. Seeley, Nitric Acid Leaching of Radium and Other Significant Radionuclides from Uranium Ores and Tailings, ORNL/TM-5944 (August 1977).

168. H. W. Godbee and D. S. Joy (ORNL), personal communication to M. B. Sears, Feb. 12, 1975.

5. NONRADIOACTIVE WASTES

The origin and treatment of chemwaste and radwaste are discussed in Sect. 4. Airborne chemical and liquid chemical releases from the process are summarized in Tables 4.7 and 4.10 respectively. The releases of noxious chemicals such as HF, NO_2, nitrate, ammonium fluoride, and other salts are also of concern. Industry today uses sophisticated technology to minimize losses of uranium, which is a valuable commodity, during processing. Waste streams have high chemical contents because excess reagents are used, but are contaminated with only small amounts of radioactive materials. The advanced treatment methods to reduce the amount of radioactive releases must be designed on the basis of the chemical flowsheets. Consequently, the engineering part of this survey evaluates the methods and costs for reducing the releases of both chemical and radioactive materials. The case studies also consider the effect on radioactive releases and on the generation of solid radwaste-chemwaste if more stringent regulations are adopted concerning chemical releases in the future. Many of the features and much of the cost of the liquid waste treatment in Cases 2 to 4 are directed primarily toward reducing the chemical releases.

The operation of a UF_6 plant will generate miscellaneous wastes in addition to the radwaste-chemwaste. These include sanitary waste, packaging materials from supplies, combustion products from the power plant, oils and greases from equipment maintenance, and chemical wastes from the fluorine cell rework area. The sanitary wastes are disposed of in a septic tank and drain field facility. Nonradioactive solid wastes and oils are incinerated or placed in a landfill. Combustion products which may contain SO_2 are dispersed through a stack.

6.0 COSTS

Costs for the various gaseous and liquid chemwaste and radwaste treatment cases for the 10,000-MT/year model SX-F UF_6 conversion plant are estimated as additions to the base plant. The waste treatment costs for the cases are subdivided into dust control effluent, process off-gas building ventilation effluent, and liquid chemwaste-radwaste costs. The liquid chemwaste-radwaste systems are very complex, and no attempt is made to proportion the liquid waste treatment costs between chemwaste and radwaste. The capital costs, annual fixed charges, annual operating cost, total annual cost, and contribution to the cost of power for the various cases are summarized in Table 6.1. A detailed breakdown of the installed equipment costs is given in Tables 6.2-6.4.

Annual fixed charges are estimated at 26% of total capital investment. This is typical of investor-owned fuel reprocessing and waste treatment facilities.[1] The basis for calculation of the fixed charge rate and the operating cost is discussed in Sect. 6.2. An annual operating expense is added to the annual fixed charge on capital to give the total annual cost of a radwaste treatment case. The annual operating (and maintenance) expense is calculated in the following manner: (1) for conventional chemical processing equipment, such as packed towers, tankage, pumps, etc., it is estimated at 40% of the annual fixed charge; (2) for dust collecting equipment, such as bag filters and liquid scrubbers, it is calculated using published information developed primarily by Stairmand[2-4] as a basis; and (3) for HEPA filters, it is based on the experience at ORNL.[5] No operating expense is added for certain capital costs such as lagoons, pipelines, and ductwork, while in other cases where the material cost is appreciable, such as for lime, magnesium oxide, cement, and drums, a higher operating expense is used (Sect. 6.2). The total annual cost for each case is divided by the equivalent annual electricity production of the fuel to obtain the contribution to power cost for each waste treatment case. A UF_6 conversion plant with a nominal production rate of 10,000 MT/year can service a nuclear economy of approximately seventy-seven 1000-MW(e)

LWRs (based on a burnup of 33,000 MWd/MT, an 80% load factor, and a 32.5% thermal efficiency). Costs are estimated in terms of 1973 dollars to make this report consistent with other reports in this series.[4-9] No attempt is made to include the effect of inflation; however, based on the Marshall and Swift (M and S) Equipment Cost Index[10] for chemical equipment, the costs in late 1978 will be about 65% higher than the 1973 costs. The cost estimates are expected to have an accuracy of about ±30%.

6.1 Capital Cost

The capital cost of the radwaste treatment cases is the sum of the direct and the indirect costs. The interest during construction and the contingency allowance are included as indirect costs.

6.1.1 Direct costs

The major equipment components were sized, and a base price was estimated, based on the general methods used to cost conventional chemical plant equipment for conceptual designs. Appropriate factors were applied to the equipment cost to estimate the expense of installation, piping, instruments and controls, electrical, and quality assurance.[11-15]

The costs of a general plant structure, warehouse buildings, or other related facilities are not included. The total direct cost for each waste (gaseous and liquid chemwaste-radwaste) treatment case is the complete equipment installed (material and labor) cost.

6.1.2 Indirect costs

For the purpose of this study, indirect costs are estimated as follows:

	Percentage of direct cost
Engineering and supervision	15
Construction expense and contractor's fee	20
Engineering design (A-E)	15
Contingency	45
Other owner's cost	10
Interest[a]	35
Total	140

[a]Interest is applied to the cumulative total cost at the rate of 8% per year over a 5-year cash flow expenditure period.

6.2 Annual Fixed Charges and Operating Costs

The annual fixed charges on invested capital are based on the Fuel Recycle Task Force[16] annual fixed rate of 24%, which was, in turn, based on the following assumptions:

Plant lifetime (amortization)	15 years
Capital investment in bonds	30%
Capital investment in equity	70%
Interest rate on bonds	5%
Rate of return on equity (after taxes)	16%
Federal income tax rate	50%
State income tax rate	3%
Local property tax rate	3.2%
Annual cost of replacements	0.35%
Annual property insurance rate	0.25%

The 5% bond interest rate is probably low by present-day standards. Increasing it to 8% would increase the fixed charge rate to about 26%; therefore, a fixed charge rate on invested capital of 26% is assumed for this study.

The annual operating and maintenance cost is calculated as 40% of the annual fixed charges for the solid and liquid chemwaste and radwaste treatment systems. Additional specific operating charges are also included where the material cost is appreciable: in Case 2, $12,000 for lime and $67,000 for ammonia; in Case 3, $262,000 for methanol, $20,000 for lime, and $57,900 for drums for solid radwaste; and in Case 4, $4,000 for lime, $26,000 for magnesium oxide, $156,000 for drums, and $537,000 for cement. The cost for on-site storage of the drums or shipping off-site for storage or burial is not included. Calculation of the annual operating cost of the gaseous waste treatment systems is based on published information for equipment, such as bag filters and liquid scrubbers,[2-4] and on experience at ORNL for the HEPA filters.[5] Annual operating costs are not assessed for the lagoons, pipelines, or ventilation ducts.

6.3 References

1. Staff of the Oak Ridge National Laboratory, Siting of Fuel Reprocessing Plants and Waste Management Facilities, ORNL-4451 (July 1971).

2. C. J. Stairmand, "The Design and Performance of Modern Gas Cleaning Equipment," Inst. Fuel, London, Bull. 29, 181 (1956).

3. William Ellison, "Wet Scrubbers Popular for Air Cleaning," Power (February 1971).

4. A. D. Ryon and R. E. Blanco, Correlation of Radioactive Waste Treatment Costs and the Environmental Impact of Waste Effluents in the Nuclear Fuel Cycle for Use in Establishing "As Low As Practicable" Guides - Appendix A. Preparation of Cost Estimates for Volume 1: Milling of Uranium Ores, ORNL-TM-4903, Vol. 2 (May 1975).

5. M. B. Sears, R. E. Blanco, B. C. Finney, G. S. Hill, R. E. Moore, and J. P. Witherspoon, Correlation of Radioactive Waste Treatment Costs and the Environmental Impact of Waste Effluents in the Nuclear Fuel Cycle - Conversion of Yellow Cake to Uranium Hexafluoride. Part I. The Fluorination-Fractionation Process, ORNL/NUREG/TM-7 (September 1977).

6. B. C. Finney, R. E. Blanco, R. C. Dahlman, G. S. Hill, F. G. Kitts, R. E. Moore, and J. P. Witherspoon, Correlation of Radioactive Waste Treatment Costs and the Environmental Impact of Waste Effluents in the Nuclear Fuel Cycle - Reprocessing Light-Water Reactor Fuel, ORNL/NUREG/TM-6 (June 1976).

7. W. H. Pechin, R. E. Blanco, R. C. Dahlman, B. C. Finney, R. B. Lindauer, and J. P. Witherspoon, Correlation of Radioactive Waste Treatment Costs and the Environmental Impact of Waste Effluents in the Nuclear Fuel Cycle for Use in Establishing "As Low As Practicable" Guides - Fabrication of Light-Water Reactor Fuel from Enriched Uranium Dioxide, ORNL-TM-4902 (May 1975).

8. W. S. Groenier, R. E. Blanco, R. C. Dahlman, B. C. Finney, A. H. Kibbey, and J. P. Witherspoon, Correlation of Radioactive Waste Treatment Costs and the Environmental Impact of Waste Effluents in the Nuclear Fuel Cycle for Use in Establishing "As Low As Practicable" Guides - Fabrication of Light-Water Reactor Fuels Containing Plutonium, ORNL-TM-4904 (May 1975).

9. J. W. Roddy, R. E. Blanco, B. C. Finney, G. S. Hill, R. E. Moore, and J. P. Witherspoon, Correlation of Radioactive Waste Treatment Costs and the Environmental Impact of Waste Effluents in the Nuclear Fuel Cycle — Conversion of Recycle Uranium to UF_6, ORNL/NUREG/TM-37 (August 1977).

10. L. J. Ricci, "CE Cost Indexes Accelerate 10-Year Climb," Chem. Eng. 82(9), 180 (1975).

11. M. S. Peters and K. D. Timmerhaus, Plant Design and Economics for Chemical Engineers, 2nd ed., McGraw-Hill, New York, 1968.

12. K. M. Guthrie, "Capital Cost Estimating," Chem. Eng., pp. 114-42 (Mar. 24, 1969).

13. K. M. Guthrie, Process Plant Estimating, Evaluation and Control, Craftsman Book Company of America, Solano Beach, Calif., 1974.

14. Robert H. Perry and Cecil H. Chilton (Eds.), Chemical Engineers' Handbook, 5th ed., McGraw-Hill, New York, 1973.

15. U.S. Environmental Protection Agency, Technology Transfer, Process Design Manual for Suspended Solids Removal (January 1975).

16. Reactor Fuel Cycle Costs for Nuclear Power Evaluation, WASH-1099 (December 1971).

7.0 ENVIRONMENTAL IMPACT (RADIOLOGICAL IMPACT)

The radiological impact of the model UF_6 plant is assessed by estimating radiation dose commitments to individuals, populations, and selected biota which may result from exposure for 1 year to the expected radionuclides discharged during normal operations. The effluents are dispersed in the environment by atmospheric or aquatic transport. The resulting concentrations of radionuclides in the air and on the soil surface at various distances and directions from the model plant, or the concentrations in the waters around the plant, are then used to estimate the doses. Doses are calculated for each site and radwaste treatment case.

Potential pathways for radiation exposure to man from radionuclides originating in a nuclear facility are presented schematically in Fig. 7.1. Although those shown in the figure are not exhaustive, they illustrate the principal pathways of exposure based on experience. External doses result from immersion in contaminated air, immersion in contaminated water, and exposure to contaminated ground surface. Internal doses result from the inhalation of contaminated air and the ingestion of contaminated food and drinking water. Conservative assumptions which tend to maximize doses are used; for example, in calculating the doses from atmospheric releases, we assumed exposure to contaminated air and ground 100% of the time with no shielding and consumption of food that is produced entirely at the location of the dose calculation. Doses from liquid releases are based on the assumption that all drinking water or fish is obtained from the streams or rivers around the plant.

Radioactive materials introduced into the body via inhalation or ingestion (internal exposure) continuously irradiated the body until

removed by processes of metabolism and radioactive decay. A dose calculated for 1 year of radionuclide intake (internal-exposure pathways) is an estimate of the total dose an individual will receive integrated over the next 50 years of his life as a result of that year of exposure (i.e., dose commitment). All of the internal doses estimated in this report represent 50-year dose commitments.

Essentially all of the dose from a material which either has a short radioactive half-life or is eliminated rapidly from the body is received in the same year that the material enters the body: that is, the annual dose rate is about the same as the dose commitment. This is the case for most radionuclides in this study since ^{234}U, ^{235}U, and ^{238}U are eliminated from the body fairly rapidly and the half-life of ^{234}Th is short. In contrast, ^{226}Ra and ^{230}Th are eliminated from the body very slowly and have long half-lives so that the individual will continue to receive a dose from the ingested material for many years after the exposure. Under these conditions, the approximate dose received in the year that the materials enter the body is obtained by dividing the dose commitment by 50; that is, approximately equal doses are received over a 50-year period. Thus the average annual dose rate from ^{226}Ra and ^{230}Th is only one-fiftieth of the dose commitment. If an individual is exposed to UF_6 plant effluents for the 30-year operating life of the facility, his annual dose rate from ^{226}Ra and ^{230}Th during the 30th year is about 30 times the annual dose rate for 1 year of exposure (i.e., approximately three-fifths the dose commitment for 1 year of exposure) and his total dose commitment is the summation of the 50-year dose commitments for each of the 30 years that apply in the 30th year. These generalized dose estimates are approximately correct for the conditions cited; however, a detailed calculation must be made to determine a more precise value for the actual dose received in a given year. Assumptions, models, and codes used to estimate radiation doses are presented in ORNL-4992.[1]

Organ doses may vary considerably for internal exposure from ingested or inhaled materials because some radionuclides concentrate in certain organs of the body. Estimates of doses are considered for all pathways of exposure based on parameters applicable to an average adult. The population total-body and organ dose estimates are the sums of the total-body and organ doses to the individuals within 55 miles (88 km) of the plant, and are based on adult doses in all cases.

Radiation doses to the internal organs of children in the population vary from those of an average adult because of differences in metabolism, organ size, and diet. Differences between the organ doses of a child and those of an average adult by more than a factor of 3 would be unusual for all pathways of internal exposure except the atmosphere-pasture-cow-milk pathway. Total-body doses are relatively independent of age.[2]

7.1 Models and Assumptions for Estimating the Radiological Impact of Airborne Effluents During Operations

The release of radioactive materials to the atmosphere is the principal mode of environmental contamination from UF_6 production facilities.

7.1.1 AIRDOS-II[3]

AIRDOS-II,[3] a FORTRAN IV computer code, is used to estimate individual and population doses resulting from the continuous atmospheric release of airborne radioactive materials from the model UF_6 plant. Pathways to man include: (1) inhalation of radionuclides in air, (2) immersion in air containing radionuclides, (3) exposure to ground surfaces contaminated by deposited radionuclides, (4) ingestion of food produced in the area, and (5) immersion (swimming) in water subjected to surface deposition from plumes. Doses are estimated for the total body as well as the following organs: GI tract, bone, thyroid, lungs, muscle, kidneys, liver, spleen, testes, and ovaries.

The area surrounding the nuclear facility is divided into 16 sectors, each of which is bounded by radial distances of 0.5, 1.0, 2.0, 3.0, 4.0, 5.0, 10, 15, 25, 35, 45, and 55 miles from the point of release. There are 176 areas lying outside the plant boundary within 55 miles of the plant.

Human population, numbers of beef and dairy cattle, vegetable crop acreage, and specification as to whether each of the 176 areas is used for producing vegetable crops or contains water (pond, lake, etc.) are required as input data.

The first part of AIRDOS-II is an atmospheric dispersion model (AIRMOD) which estimates concentrations of radionuclides in air at ground level and their rates of deposition on ground surfaces as a function of distance and direction from the point of release. Annual average meteorological data for the area are supplied as input for AIRMOD.

AIRMOD is interfaced with environmental models within AIRDOS-II to estimate doses to man through the five pathways. The most complex environmental model is a terrestrial model (TERMOD) developed by Booth, Kaye, and Rohwer.[4] This model estimates radionuclide intakes via ingestion of radionuclides deposited on crops, soil, and pastures. The intakes result from eating beef and vegetable crops and drinking milk. Ingestion of fish or other foods produced in water areas is not included in the present version of AIRDOS-II.

Population doses are summarized in the output tables of AIRDOS-II in a number of ways - by nuclides, pathways, and organs. The highest individual doses in the area for each organ are tabulated for each radionuclide, and the highest organ doses from all radionuclides in the source term are listed. The highest individual dose is specified.

7.1.2 Atmospheric dispersion (meteorology)

The basic equation used to estimate atmospheric transport to the terrestrial environment is Pasquill's Equation[5] as modified by Gifford.[6] For particulate releases, the meteorological χ/Q values are used in conjunction with dry deposition velocities and scavenging coefficients to estimate air concentrations and steady-state ground concentrations. Radioactive decay during plume travel is taken into account in AIRDOS-II. Daughters produced during plume travel must be added to the AIRDOS-II source term. Concentrations in air for each sector are used to calculate dose via inhalation and submersion in air. Ground surface concentrations are used for external radiation exposure. The ground deposits are also

assimilated into food which, when ingested, results in an additional dose via the food chain pathway.

The meteorological data required for the calculations are joint frequency distributions of wind velocity and direction summarized by stability class. Meteorologic data[7] from representative first-order weather stations in the Midwest (St. Louis, Missouri) and New Mexico (Albuquerque) are used to calculate the concentrations of radioactive materials at a reference point per unit of source strength. The χ/Q values are calculated for sectors in the 16 principal compass directions bounded by radial distances of 0.5, 1.0, 2.0, 3.0, 4.0, 5.0, 10, 15, 25, 35, 45, and 55 miles from the point of release.

Radioactive particulates are removed from the atmosphere and deposited on the ground via mechanisms of dry deposition and scavenging (washout). Dry deposition, as used in this analysis, represents an integrated deposition of radioactive materials by processes of gravitational settling, adsorption, particle interception, diffusion, and chemical-electrostatic effects and is calculated from the deposition velocity, V_d. Deposition velocity values for particles and reactive gases commonly range from 0.1 to 1.0 $cm \cdot sec^{-1}$ (refs. 8, 9). A value of 1.0 $cm \cdot sec^{-1}$ is used for calculating ground concentrations of all radioactive particles. Scavenging of radionuclides in a plume is the process through which rain or snow washes out particles or dissolves gases and deposits them on ground or water surface. Methods for estimating scavenging coefficients can be found in Meteorology and Atomic Energy - 1968.[10] Scavenging coefficients for particulates[10] of 2.0×10^{-5} sec^{-1} and 4.6×10^{-6} sec^{-1} are assumed for the midwestern and New Mexico sites, respectively.*

Most radionuclides released to the atmosphere by UF_6 plants have long half-lives (e.g., ^{238}U, ^{234}U, ^{235}U, ^{230}Th, and ^{226}Ra) or are in secular equilibrium with a long-lived parent so that effectively no significant radioactive decay occurs as the plume travels. However, gaseous ^{222}Rn will decay as the plume travels, producing particulate daughters. Decay of ^{222}Rn is taken into account by the AIRDOS-II code. Its daughters are

*Scavenging was not considered in the earlier studies in this series on uranium mills.[11]

added to the source term to take their buildup into account. A period of 7 min was conservatively assumed to be required for the airborne plume to reach the plant boundary in the prevailing wind direction for the purpose of determining the buildup of ^{218}Po and ^{214}Pb daughters from ^{222}Rn in order to estimate maximum individual doses. In estimating population doses, it was assumed that the daughters were in secular equilibrium with ^{222}Rn. The production of ^{222}Rn from the ^{226}Ra particulates in the plume was not taken into account because the quantity produced is insignificant as compared with that released by the plant initially.

For a 5-m release height (the condition assumed in this study), the maximum ground-level concentration of radioactive materials in air occurs near the point of release. If we assume a site boundary of 0.5 mile (800 m), the maximum off-site χ/Q value (least dilution) for long-lived radionuclides released as particulates after adjusting for plume depletion processes of deposition and scavenging, for example, is 3.89×10^{-6} sec·m^{-3} for the midwestern plant and 5.57×10^{-6} sec·m^{-3} for the New Mexico plant. The χ/Q values decrease by more than three orders of magnitude at a distance of 55 miles (88 km) from the source. Concentrations at distances nearer the plant than 0.5 mile (800 m) are higher by the following factors: 100 m, 13.3; 200 m, 8.20; 300 m, 5.50; 400 m, 3.63; 500 m, 2.48; and 600 m, 1.32. The maximum concentrations are found downwind from the plant in the prevailing wind direction. Average concentrations at 0.5 mile (800 m) from the plant are about 47% of the maximum levels.

The 5-m release height is a conservative assumption. Higher release heights result in slightly lower χ/Q values because of greater dilution, while lower release heights produce even lower χ/Q values because of greater ground deposition of particulates near the point of release with consequent greater depletion of the plume within the plant boundary. For example, at 0.5 mile (800 m) from the midwestern plant, maximum values of χ/Q for long-lived radioactive particulates are 2.34×10^{-6}, 3.89×10^{-6}, and 3.70×10^{-6} sec·m^{-3} for release heights of 0, 5, and 10 m, respectively.

7.1.3 Population

Population distributions representative of midwestern and western (milling) environments were derived. The population distribution for the

midwestern site is the average around two fuel fabrication plants and one reprocessing plant in the area. Distributions for a site near a large city, St. Louis, Missouri, are included in the averaging. The distribution for the western site is the average for five actual sites of uranium mills in New Mexico and Wyoming.

Average population distributions are calculated from data sets for areas determined by the latitude-longitude coordinates specified in Table 7.1. Actual population distributions from these locations were summarized from 1970 Census Bureau tape records to obtain representative distributions for midwestern and western (milling) regions (Tables 7.2 and 7.3). The computer code PANS[12] provides sector summaries for annuli bounded by distances of 0.5, 1.0, 2.0, 3.0, 4.0, 5.0, 10, 15, 25, 35, 45, and 55 miles. The sector summaries correspond to the same sectors in the 16 compass directions for which χ/Q values are calculated. The computer code summaries of population data from census tapes are accurate beyond a 5-mile radius. Within 5 miles, where sectors represent relatively small areas, distributions are somewhat disconnected because census enumeration districts encompass several sectors, whereas the population records are reported in a single sector. Averaging data from several locations smooths the major discontinuities.

Population distributions for the two sites of the model UF_6 production facilities have different characteristics (Tables 7.2 and 7.3). The midwestern site includes small towns and one large city as well as rural agricultural areas within the 55-mile (88-km) radius, while the western (milling) site is in a sparsely settled, arid region. The population density of the midwestern site within the 5-mile (8-km) radius of the plant is 95 individuals per square mile. The density increases to 126 individuals per square mile in the 10- to 25-mile (16- to 40-km) annulus and to 440 individuals in the 25- to 55-mile (40- to 88-km) annulus, which includes the large city. Cumulative population in the area encompassed by the 55-mile (88-km) radius is estimated to be about 3.6 million persons. By comparison, average data for western milling sites (Table 7.3) show no individuals at distances of less than 1 mile, four individuals per square mile in the 1- to 5-mile annulus (4% of the midwestern density), ten in

the 5- to 10-mile annulus (8% of the midwestern density), three in the 10- to 35-mile annulus, and only seven in the 35- to 55-mile annulus, even though it includes several small towns. Cumulative population in the area encompassed by the 55-mile radius is only about 53,000 persons, or ∿1.5% of the population around the midwestern site.

7.1.4 Dose conversion

Concentrations of radionuclides in the air and on the soil surface are used to estimate the radiation dose to individuals at various distances and directions from the model plant. The dose conversion factors for submersion in the airborne effluent, exposure to contaminated ground surface, and intake of radionuclides through inhalation and ingestion are calculated with computer codes[13,14] which use dosimetric criteria of the International Commission on Radiological Protection (ICRP) and other recognized authorities. The dose conversion factors for most radionuclides are based on ICRP-2;[15] however, the factor proposed in ICRP-10[16] is used for ^{226}Ra. This new ^{226}Ra value is about one-sixth of the ICRP-2 value. Estimates of the intake of radionuclides by man through terrestrial food chains are made with a model and a computer code,[4] incorporated within AIRDOS-II, which considers transfer of all radionuclides to man via ingestion of crop plants, beef, and milk. The methodology used in estimating radiation doses is given in ORNL-4992.[1]

Many of the basic environmental parameters used in this model are conservative (i.e., the values are chosen to maximize intake by man). Many factors which would reduce the radiation dose, such as shielding provided by dwellings and time spent away from the reference location, are not considered. It is assumed that an individual lives outdoors in the reference location 100% of the time. Doses are calculated for the final period of plant operation where there is a 30-year accumulation of deposited radioactive materials on the ground surface outside the property. In estimating doses via ingestion of plants, meat, and milk, an individual is assumed to obtain all his food at the reference location specified in the dose calculation. This event, although not impossible, is extremely unlikely. In addition, since the solubility of the radionuclides in body

fluids is not known, the model conservatively assumes that particles which are inhaled are insoluble, and not excreted from the body, while radionuclides which are eaten are soluble and therefore most likely to be absorbed. Thus, individual dose estimates calculated by these methods are higher than actually expected.

7.2 Environmental Impact During Operations for Plant Feed Containing "Low" Levels of ^{230}Th and ^{226}Ra Impurities

The environmental assessment of a model solvent extraction-fluorination (SX-F) UF_6 plant processing a feed containing 2800 pCi of ^{230}Th and 200 pCi of ^{226}Ra per gram of natural uranium is presented in the following subsections. The major emphasis is on this "low-impurity" feed, which is a composite of the yellow cake produced by domestic mills in recent years.[17] For comparative purposes, the environmental impact of a plant processing feed containing "high" levels of ^{230}Th and ^{226}Ra is considered in Sect. 7.4.

7.2.1 Radiation dose commitments from airborne effluents

7.2.1.1 Doses to individuals. The maximum annual total-body and organ doses to individuals from all airborne effluents at 0.5 mile (800 m) from the operating model SX-F UF_6 plant are summarized in Table 7.4, assuming a 5-m release height and production of all food locally. Appropriate dose reduction factors can be applied when (1) the release height is lower or higher than 5 m (Sect. 7.2.1.5), and (2) the food source is known (Sect. 7.2.1.4). The doses to organs not listed are equal to, or less than, the value shown for total-body dose.

At the midwestern site, the maximum annual individual total-body dose (Table 7.4) decreases from 3.0 mrem in Case 1 to 1.0 mrem in Case 2, which is about the practical limit of present technology (Sect. 4.0). Additional dose reduction to 1.9×10^{-3} mrem is illustrated in Case 4. The dose to the bone (28 mrem in Case 1) is approximately nine times higher than the total-body dose, while the doses to lungs and kidneys are, respectively, six and two times higher. Treatment Case 2 is effective in reducing doses to body organs by more than one-half those for Case 1. Maximum individual

doses for the western (New Mexico) site are about 30% higher than for the midwestern site; however, the population distribution indicates that the probability of an individual residing within a 1-mile radius of the plant (Table 7.3) is low.

Doses attributable to the different types of airborne plant effluents are presented in Tables 7.4a-7.4e. Dose reductions for the bone dose from Case 1 to Case 2 were significant for both the process dust control effluent (from 15 mrem to 2.1 mrem, at the midwestern site, Table 7.4a) and the process off-gas (from 7.4 mrem to 1.1 mrem, Table 7.4b). If dose reduction beyond Case 2 is desired, it is more effective to apply treatment to the building ventilation effluent (reduction of the bone dose from 5.9 mrem in Case 1 or 2 to 0.7 mrem in Case 3) than to apply additional treatment to the process dust control or process off-gas effluents. Cases 1 and 2 have a radon emanation from radium-containing radwastes which are impounded near the plant, as well as the radon gas release from plant processes (Sect. 4.4.15). This is similar to the situation at a uranium mill where radon releases occur both from the tailings (e.g., waste) impoundment and from the mill. In Case 1, the total annual radon dose to the lungs from a 30-year accumulation of wet radwaste sludges (Sect. 4.4.11.4) is estimated as 0.2 mrem (midwestern site, Table 7.4e). In Case 2, the model is a 15-year accumulation of solid and liquid radwastes without $BaCO_3$ treatment (Sect. 4.4.11.5), and the radon lung dose is estimated as 2.7 mrem at the midwestern site (Table 7.4e). This is about one-third of the total lung dose in Case 2 (Table 7.4). The dose in Case 2 is slightly higher for the New Mexico site (3.0 mrem). In the advanced case studies the radwastes are shipped off-site, thus eliminating the major radon source at the UF_6 plant (Sects. 4.4.11.6, 4.4.11.7, and 4.4.14). The radon dose to the lungs from plant processes in Cases 3 and 4 is less than 0.1 mrem; however, preparation of the radwaste for shipment may generate airborne dusts. Case 3 includes drying and drumming the radwaste sludges (Sect. 4.4.11.6). Assuming dust control that is typical of the case level (e.g., primary and secondary bag filters), the annual bone dose from handling the radwaste is estimated as 1 mrem (Table 7.4d). Case 4 incorporates the bulk of the wet sludges in cement and has only a very small radwaste dust release associated with the nitrate recovery circuit (Sect. 4.4.11.7).

7.2.1.2 Doses to population. The annual dose commitments from airborne effluents to the population living within 55 miles (88 km) of the model SX-F UF_6 plant are summarized in Table 7.5. At the midwestern site the population total-body dose decreases from 3.2 person-rem in Case 1 to 1.0 person-rem in Case 2, while the population bone dose decreases from 26 person-rem to 2.5 person-rem. Population doses are much lower at the sparsely settled New Mexico site, for example, <0.1 person-rem total body and <1 person-rem bone in all cases.

7.2.1.3 Exposure modes and radionuclides. The relative contributions of exposure modes to the maximum annual individual total-body dose from airborne effluents are given in Table 7.6 for Case 1. Exposure from contaminated ground accounts for 55% of the total-body dose, inhalation for 28%, and ingestion of contaminated food for 17%.

The relative contributions of the principal radionuclides to the doses from airborne effluents are presented in Table 7.7. Most of the total-body dose (93%) is due to the uranium isotopes, while only about 7% is due to the combined ^{226}Ra and ^{230}Th present in the "low-impurity" feed. Approximately 80% of the bone and kidney doses are due to the uranium isotopes. The uranium isotopes are also the principal contributors (95%) to the lung dose. In Case 1, only a little more than 1% of the lung dose and ∿0.2% of the total-body dose are due to the ^{222}Rn released; however, in Case 2 about one-third of the lung dose is due to the ^{222}Rn (Tables 7.4 and 7.4e).

The relative contributions of the principal radionuclides to the exposure modes for airborne effluents are shown in Table 7.8. The uranium isotopes are the source of ∿94% of the total-body dose via the ingestion pathway. Although most of the total-body dose via the inhalation pathway is the result of ^{234}U and ^{238}U (72%), 27% can be attributed to the ^{230}Th. Essentially all of the total-body dose resulting from contaminated ground surfaces is accounted for by the uranium radionuclides, mainly ^{238}U (69%). As with the total-body dose, most of the dose to the bone, lung, or kidney via the ingestion pathway is due to the uranium radionuclides (≥94%). However, the ^{230}Th radionuclide via the inhalation pathway is an important contributor to the bone and kidney doses, accounting for ∿45% of the dose

from this exposure mode. Radiation doses to organs are largely dependent on the specificity of certain radionuclides to accumulate in certain organs.

7.2.1.4 Effect of food source on dose. It is unlikely that the entire food supply of the individual receiving the maximum exposure would be produced locally, that is, 0.5 mile (800 m) downwind from the plant in the prevailing wind direction. Doses to the individual, assuming that none (0%) of his food is produced locally, are shown in Table 7.9. Doses that may be applied when the food source is known are presented in Tables 7.10a-7.10d. In Cases 1-3, if only 10% of the food is produced locally, the total-body doses are ∿77% and the bone doses are ∿64% of those based on 100% local food. A diet of food produced 2 miles downwind of the plant in the prevailing wind direction, or 1 mile from the plant in an average wind direction, would be roughly equivalent to a diet of 10% food produced 0.5 mile downwind and 90% imported food. The food ingestion pathway has little effect in Case 4, where the doses are very low (Table 7.10d).

7.2.1.5 Effect of release height on dose. Factors for estimating doses to individuals as a function of the release height from ground level to 30 m (100 ft) are presented in Table 7.11. At the midwestern site, the maximum individual total-body dose for a 30-m-high release is 32% of the dose from a 5-m-high release, while the dose from a 1-m-high release is 63% of that from the 5-m-high release. With a low release height, more particulates are deposited on the ground within the site boundary; with a high release height, there is greater atmospheric dilution. Thus, a 30-m stack on a UF_6 plant whose effluents are predominantly particulates will reduce the dose to the individual at the site boundary because of greater dilution, but it will also increase the population exposure because more radioactive materials are dispersed beyond the site boundary.

7.2.1.6 Effect of distance from plant on dose. The dose to the individual decreases rapidly with increasing distance from the plant (Table 7.12). For example, the dose at 5 miles (8 km) is only 1% of that at 0.5 mile. In the model, all exposure within the 0.5-mile radius is of occupational origin, which is not part of this study, and no food is

produced on-site. If the site boundary were less than 0.5 mile, the dose factors for a low-level release would be approximately proportional to the χ/Q air concentrations given in Sect. 7.1.2.

7.2.1.7 Doses to biota other than man. The estimated maximum doses to man (total body) in SX-F Case 1 range from 3.0 to 4.2 mrem/year for individuals located 0.5 mile from the facility. The radiation doses to terrestrial animals living around the site would be similar. Small mammals, such as rodents and rabbits, and larger animals, such as deer, would also be subjected to exposures via immersion in air, contaminated ground, and inhalation. These animals would receive additional exposure via their particular food chains.

7.2.2 Radiological impact of liquid effluents

In Cases 1-3 the model UF_6 plant has a liquid effluent which may potentially contribute to the radiation dose to man. In Case 4, there is no liquid effluent containing radioactive materials and hence no potential dose via aquatic pathways. Two types of sites are considered: (1) release to a small, 15-cfs (0.4-m^3/sec) stream, and (2) release to a 1300-cfs (37-m^3/sec) river. Doses to individuals are estimated for submersion in water (swimming), ingestion of water, and eating fish from the waters around the model plant. Use of waters for irrigation is not included. It is difficult to predict population distribution along a river; therefore, no attempt is made to estimate population doses for liquid effluents. Dose conversion factors for most radionuclides are based on data presented in ICRP-2.[15] The new value proposed in ICRP-10[16] is used for ^{226}Ra.

7.2.2.1 Doses to individuals.[1] Annual dose commitments to total body and bone from using the waters around the model SX-F UF_6 plant are presented in Table 7.13. In Case 1, liquid wastes are treated before being released to remove radioactive materials and heavy metals, but not nitrate. Doses from using the 15-cfs (0.4-m^3/sec) stream are about 30% (0.94 mrem total body) of those from the Case 1 airborne effluents, while doses from using the 1300-cfs (37-m^3/sec) river (0.01 mrem total body) are less than 1% of those from airborne effluents. It is unlikely that

individuals would routinely use the 15-cfs stream of Case 1 as a source of drinking water or fish, or for swimming, because of its small size and the presence of nonradioactive chemicals. Thus, individuals are unlikely to receive the 15-cfs stream dose. It is more probable that the river would serve as the water supply for a segment of the population. Drinking the water and eating the fish account for about 65% and 35% of the dose, respectively, with swimming contributing about 0.005% (Table 7.13). In Case 1, ^{226}Ra contributes ∿52% of the dose from drinking water and >80% of the dose from eating fish (Table 7.14).

In Case 2 the liquid nitrate waste from solvent extraction, which is the principal source of the ^{226}Ra, is impounded. This measure is effective in reducing the doses via aquatic pathways to very low levels (e.g., 1×10^{-5} mrem total body and 2×10^{-4} mrem bone from the 15-cfs stream). Case 2 does not address the final disposal of the liquid nitrate waste. Additional exposure to radioactive materials may be associated with the disposal of this waste. There is also a potential for accidental releases via dike failure or seepage through cracks in the liner. In Case 3, treatment is applied to remove the nitrate as well as the radioactive materials before releasing purified wastewater; doses are similar to those of Case 1. With most of the chemical pollution removed, the 15-cfs stream would be more attractive in Case 3 than in Case 1; however, because of its small size, it would probably not be very heavily used. Case 4 has no liquid release carrying radioactive materials.

7.2.2.2 Doses to biota other than man.[1] Radiation doses to aquatic plants, invertebrates, fish, and waterfowl are estimated in Table 7.15 for the 15-cfs stream and the 1300-cfs river near the SX-F UF_6 plant. It is unlikely that higher organisms, such as fish or waterfowl, could tolerate living in direct liquid effluents because of the nonradioactive chemical concentrations and also because these effluents would not be found in a physical habitat conducive to higher aquatic life. Doses to organisms living in the 15-cfs stream are almost 90 times higher than those estimated for biota living in the river where appreciable dilution takes place. Case 2 liquid radwaste treatment results in a dose reduction to the algae, invertebrates, fish, muskrat, and waterfowl of several orders of magnitude.

Uranium-234, ^{238}U, and ^{230}Th are important contributors to the doses to plants, invertebrates, and fish (Table 7.16). Due to the relatively high bioaccumulation factor, ^{226}Ra contributes almost 100% of the doses to muskrat and waterfowl.

7.2.3 Total radiation dose from all pathways

The annual individual total-body dose commitment of 3.0 to 4.2 mrem (Case 1, 1300-cfs stream) from liquid and airborne effluents from the model SX-F UF_6 plant through both the terrestrial and the aquatic pathways is ∿3% of the normal background dose of 100 to 170 mrem/year in the United States.

7.3 Radiation Dose from Long-Lived Radionuclides After Closure of the UF_6 Plant

In this section, estimates are presented of future potential radiation doses to individuals and populations exposed to the long-lived radionuclides that are deposited on the land surfaces as the result of UF_6 plant operation. These estimates involve many complex considerations. Since all of the information necessary to make accurate predictions is not available, the estimates are based on the best current knowledge. Conservative assumptions make it likely that the estimates of health consequence are well above the probable effects. A more-detailed assessment of the radiation exposure to future generations from long-lived elements has been included in a recent environmental analysis of the LMFBR program.[18]

This study is limited to an assessment of the postoperational impact of radioactive materials distributed in the environment while the facility is active. It does not address (1) the impact of releases during the period when the facility, particularly the Case 1 or Case 2 radwaste impoundment, is being decommissioned; (2) the long-term radon release from the waste; or (3) the potential for other long-term releases from the waste such as leaching by natural waters or seepage if the integrity of the container or liner should fail. Final disposition of the radwaste is at present unclear.[19] While it seems unlikely, there is a remote possibility that the Case 1 or Case 2 radwaste impoundment near the UF_6 plant might

become the permanent waste repository. In that event, the population living around the site would be exposed to a long-term radon emanation from the waste in addition to the exposure to materials distributed while the facility was active.

7.3.1 Postoperational source terms

The model UF_6 plant releases airborne dusts and small amounts of radon gas throughout each year of operation. In Cases 1 and 2, radon is also released from the nearby radwaste impoundment. During this time, individuals and populations are exposed to a radioactive cloud from which they receive radiation doses due to immersion in the cloud and to inhalation. Radionuclides are deposited on the ground from the cloud and accumulate in the environment around the facility, causing external radiation exposure from contaminated ground and the ingestion of contaminated food. The radionuclides with long half-lives continue to expose the population after the plant has ceased operations. The total quantities of long-lived radionuclides released in Case 1 from the model SX-F UF_6 plant during a 30-year operation are listed in Table 7.17. These long-lived radionuclides (^{234}U, ^{235}U, ^{238}U, ^{226}Ra, and ^{230}Th) will remain in the environment for generations.

The distribution of these radionuclides around the UF_6 plant must be estimated in order to define the radiation dose to the population. For this assessment, it is estimated that essentially all of the radioactive materials are deposited within a 55-mile (88-km) radius of the plant. Estimates of the deposition of particulates indicate that as much as 70% is deposited within 50 miles (80 km) when the release point is the top of a 100-m-high stack.[9] Deposition for the 5-m-high release point assumed in this study is expected to be >70%.

The average exposure to individuals and to the population is estimated by using the assumption that the radionuclides that are deposited during the operational lifetime of the model UF_6 plant are uniformly distributed within the 55-mile radius area (2.46×10^{10} m^2). The use of this assumption causes an underestimation of the dose to individuals living near the facility or in areas of the prevailing wind direction, and an overestimation

of the dose to individuals living in the outer annulus of the 55-mile radius of the plant.

7.3.2 Postoperational pathways of exposure

7.3.2.1 Resuspended air activity. After airborne particulates have been removed from the atmosphere and reach the ground by deposition and washout, they may again enter the atmosphere by resuspension processes. In this case, they may be inhaled. There is presently no general model which may be used to predict the levels of resuspended air activity by taking into account the geometrical configuration of the land surfaces, the parameters of host soil, the vegetation cover, and the meteorological conditions. These highly variable factors and others related to land use, such as the disturbance of soil surfaces by human activity, must be considered in preparing a precise estimate of resuspended radioactivity.

A resuspension factor can be estimated from measurements made above aged contaminated soil and from consideration of natural tracers such as ^{238}U. Resuspension factors of 10^{-9} and $10^{-10} \cdot m^{-1}$ were obtained from recent measurements of ^{239}Pu made at the Nevada Test Site in an area contaminated 17 years previously.[18] Plutonium-239 measurements made in the vicinity of the Rocky Flats Plant several years after deposition indicated a resuspension factor of 10^{-9} m^{-1} (ref. 18). Discounting airborne material of industrial origin, the data concerning movement of natural ^{238}U indicate that a realistic estimate of the resuspension of aged radioactive material in surface soil lies between 10^{-8} and 10^{-10} m^{-1} (ref. 9). This is in agreement with the field measurements for ^{239}Pu. An intermediate value of 1×10^{-9} is used in this survey to estimate the amounts of radioactive materials resuspended over a long period of time in the regions around a UF_6 plant facility. The resulting airborne concentration is used to estimate the inhalation dose. It is assumed that the resuspension value remains constant even though the deposited radionuclides may not remain on or near the surface of the soil. Actually, a continuation in the reduction of the availability of these materials beyond the current measurement experience of 30 years can be expected. Thus, the use of a constant resuspension factor is a conservative

assumption which will maximize the estimated dose. Resuspended radionuclides are also assumed to enter terrestrial food pathways (vegetables, milk, and beef) via redeposition on foliage of crops and pastures. The following expression is used to estimate intake via inhalation of resuspended radionuclides:

$$\text{Ci intake}\cdot\text{year}^{-1} = \text{Ci}\cdot\text{m}^{-2} \times 10^{-9}\ \text{m}^{-1} \times 7300\ \text{m}^{3}\ \text{inhaled}\cdot\text{year}^{-1}.$$

7.3.2.2 Ingestion of food. Plants may be contaminated by deposition of resuspended particulates onto foliar parts and by root uptake of isotopes leached from, or exchanged with, particles deposited in soil. Plant uptake studies show that uranium, radium, and thorium are strongly excluded from plant uptake and poorly translocated by plant systems. The general findings from experiments indicate that the concentration factors (concentration of dried plant material divided by concentration of dried soil) are about 10^{-3} to 10^{-4}. Lower factors may occur under field conditions. Although various plant and soil types have been tested, the list is not all-inclusive. Long-term changes in plant uptake are unknown. These changes would depend on the effects of several competing processes, including a downward movement of radioactive materials in soil, which may reduce their availability to higher plants, and reactions with soil organic matter and microbial transformations, which may increase their availability.

The fraction of these radionuclides that enters man via ingestion or inhalation will depend on their distribution, their chemical and physical behavior in the environment for thousands of years, and climatological conditions and land-use patterns specific to the area. Sufficiently detailed and accurate knowledge regarding the many factors influencing the movement of these elements through the environment over the periods of hundreds to tens of thousands of years, during which they may enter man through the ingestion pathway, is not available to permit a precise estimate of the dose to man. It is appropriate, therefore, to use conservative parameters and assumptions to estimate the amounts that may be ingested by the population. It is assumed that (1) plant material accumulates a concentration, C_f, of radionuclides in the soil in which the plants grow; (2) downward movement of the radionuclides in the soil does not continue beyond the root zone (15 cm); and (3) radionuclides are not lost by drainage

of water. With a soil density of 1.5 $g \cdot cm^{-3}$, the radionuclides deposited on a square meter are contained in 2.25×10^5 g of soil. The following expression is used to estimate the intake via ingestion of plants:

$$Ci \cdot year^{-1} \text{ ingested} = (Ci \cdot m^{-2}/2.25 \times 10^5 \text{ g } m^{-2}) \times C_f \times 9.12 \times 10^4 \text{ g plant ingested} \cdot year^{-1},$$

where the C_f values are 2.5×10^{-3} for uranium, 3.0×10^{-4} for radium, and 4.0×10^{-3} for thorium. Additional intake from the ingestion of plants contaminated via resuspended radionuclides is calculated using the TERMOD code.[4]

7.3.2.3 Contaminated ground. Exposure via contaminated ground is also estimated. It is assumed that no deposited radionuclides are lost from the soil surface except through radioactive decay.

7.3.3 Estimates of postoperational doses

The radiation dose to an individual residing within the uniformly contaminated area of 9.5×10^3 square miles (2.46×10^{10} m^2) is estimated both for total body and for organs that are known to accumulate the long-lived radionuclides. Population doses are expressed as person-rems per 3.6×10^6 persons, the population within 55 miles (88 km) of the mid-western plant. No assumptions for population change are included. All radiation doses from ingestion and inhalation are 50-year dose commitments from 1 year of exposure (i.e., the dose an individual will accrue over a 50-year period from 1 year of intake of radionuclides). External doses (exposure to contaminated ground) are annual doses from 1 year of exposure. It is conservative to call a dose commitment an annual dose in the case of a single year's intake of long-lived radionuclides. However, dose commitments may approximate annual doses in situations where people are continually exposed over long periods of time and radionuclides have reached steady-state conditions in the environment.

7.3.3.1 Individual and organ doses. As a result of the deposition of long-lived radionuclides, persons living within a 55-mile (88-km) radius of the model SX-F UF_6 plant will continue to receive some radiation dose

above background long after plant operation has been terminated. The doses per year of exposure to the average individual for the various radionuclides and exposure modes are shown in Table 7.18. More than 92% of the total-body dose (2.8×10^{-4} mrem in Case 1) results from exposure to contaminated ground. The three uranium isotopes (^{234}U, ^{235}U, and ^{233}U) contribute about 99% of the total-body dose. These are average doses out to 55 miles. The dose range, as a function of distance, will vary considerably over the 55-mile area.

The average annual doses to the organs resulting from the various radionuclides are shown for the major internal pathways in Table 7.18. The bone receives the highest organ dose (4.0×10^{-4} mrem from ingestion plus inhalation in Case 1), which is about four times that to the kidney and more than twice that to the lungs. Major contributors to the bone dose are ^{234}U (44%) and ^{238}U (41%).

7.3.3.2 Population doses. The annual total-body dose to the population is 1.0 person-rem per 3.6×10^6 persons in Case 1 after the UF_6 plant closes and until the long-lived radionuclides show significant decay (Table 7.19). The total body dose is due almost entirely to uranium isotopes. Less than 10% of the bone dose can be attributed to ^{230}Th and ^{226}Ra; the remainder is due to the uranium isotopes.

7.4 Environmental Impact During Operations for Plant Feed Containing "High" Levels of ^{230}Th and ^{226}Ra Impurities

Recent sampling of UF_6 plant feed indicates that the "low" levels of ^{230}Th and ^{226}Ra, impurities cited in Sect. 7.2, are the most probable concentrations that will occur in the plant feed.[17] Although unlikely, higher concentrations might possibly occur. For comparison, a brief assessment of a model plant for a feed containing "high" levels of ^{230}Th and ^{226}Ra (e.g., 14,200 pCi of ^{230}Th and 1600 pCi of ^{226}Ra per gram of U_{nat}) is considered in this section. Other parameters used in the assessment are the same as those for the "low-impurity" feed.

7.4.1 Radiation dose commitments from airborne effluents

The maximum annual doses from the airborne effluents for the "high-impurity" feed, assuming that 100% of the food consumed is grown locally, are presented in Table 7.20. The total-body annual doses for Case 1 of 4.0 and 5.6 mrem are 25% higher than the comparable doses for the "low-impurity" feed (Table 7.4). The doses to the bone and kidney are higher by approximately 45%, primarily as a result of the increase in the ^{230}Th radionuclide via the inhalation pathway.

The doses resulting from airborne effluents, assuming that none of the food consumed is grown locally, are shown in Table 7.21. The bone dose is increased by ∿30% with the elimination of the ingestion pathway. With the "low-impurity" feed (Table 7.9), the comparable dose is decreased by 50%; however, in the case of the "high-impurity" feed, the decrease is not as great because of the importance of the ^{230}Th via the inhalation pathway.

The annual doses to the population are shown in Table 7.22. The presence of the higher concentrations of ^{230}Th and ^{226}Ra is responsible for an increase of ∿20% in the total body, 40% in the bone, and 25% in the lung population doses over the comparable doses for the "low-level" impurity feed (Table 7.5).

7.4.2 Radiological impact of liquid effluents

The annual doses to individuals from liquid effluents are given in Table 7.23. In Cases 1 and 3, the dose to the total body from using the waters of the receiving stream is ∿40% higher and the bone dose is ∿60% higher for the "high-impurity" feed option than are the comparable doses for the "low-impurity" feed. The increase is due primarily to the higher ^{226}Ra concentration in the liquid effluent, which contributes to the internal dose via the ingestion of water and fish. In Case 2, where the solvent extraction wastes are impounded and only treated off-gas scrub liquors are released, the doses for the "high-impurity" feed options are about the same as those for the "low-impurity" feed.

7.5 References

1. G. G. Killough and L. R. McKay (Eds.), A Methodology for Calculating Radiation Doses from Radioactivity Released to the Environment, ORNL-4992 (March 1976).

2. Federal Radiation Council, Estimates and Evaluation of Fallout in the United States from Nuclear Weapons Testing Conducted Through 1962, Report No. 4 (May 1963).

3. R. E. Moore, The AIRDOS-II Computer Code for Estimating Radiation Dose to Man from Airborne Radionuclides in Areas Surrounding Nuclear Facilities, ORNL-5245 (April 1977).

4. R. S. Booth, S. V. Kaye, and P. S. Rohwer, "A Systems Analysis Methodology for Predicting Dose to Man from a Radioactively Contaminated Terrestrial Environment," Proceedings of the Third National Symposium on Radioecology, May 10-12, 1971, Oak Ridge, Tennessee, D. J. Nelson (Ed.), CONF-710501, pp. 877-93; R. S. Booth and S. V. Kaye, A Preliminary Systems Analysis Model of Radioactivity Transfer to Man from Deposition in a Terrestrial Environment, ORNL-TM-3135 (Oct. 1971).

5. F. Pasquill, Meteorol. Mag. 90, 1063 (1961).

6. F. A. Gifford, Jr., "Use of Routine Meteorological Observations for Estimating Atmospheric Dispersion," Nucl. Safety 2(4), 47 (1961).

7. U.S. Dept. of Commerce, NOAA, Seasonal Annual Wind Distribution by Pasquill Stability Classes (6) STAR Tabulation, St. Louis, Mo., and Albuquerque, N.M.

8. F. A. Gifford, Jr., and D. H. Pack, "Surface Deposition of Airborne Materials," Nucl. Safety 4(4), 76-80 (1962).

9. K. E. Cowser, M. Reeves, P. G. Fowler, and W. M. Culkowski, "Radiological Impact of Gaseous Effluents on Local Environments," Proceedings of the International Symposium on Radioecology Applied to the Protection of Man and His Environment, EUR-4800 (1972), pp. 923-38.

10. D. H. Slade, Meteorology and Atomic Energy, TID-24190 (1968).

11. M. B. Sears, R. E. Blanco, R. C. Dahlman, G. S. Hill, A. D. Ryon, and J. P. Witherspoon, Correlation of Radioactive Waste Treatment Costs and the Environmental Impact of Waste Effluents in the Nuclear Fuel Cycle for Use in Establishing "As Low As Practicable" Guides - Milling of Uranium Ores, ORNL-TM-4903, Vol. 1 (May 1975).

12. P. R. Coleman and A. A. Brooks, PANS: A Program to Tally Population by Annuli and Sectors, ORNL-TM-3923 (October 1972).

13. D. B. Trubey and S. V. Kaye, The EXREM III Computer Code for Estimating External Radiation Doses to Populations from Environmental Releases, ORNL-TM-4322 (Dec. 1973).

14. W. D. Turner, S. V. Kaye, and P. S. Rohwer, EXREM and INREM Computer Computer Codes for Estimating Radiation Doses to Populations from Construction of a Sea-Level Canal with Nuclear Explosives, Union Carbide Corporation Report K-1752 (September 1968).

15. International Commission on Radiological Protection, Report of Committee 2 on Permissible Dose for Internal Radiation, ICRP Publication 2, Pergamon, New York, 1959.

16. International Commission on Radiological Protection, Report of Committee IV on Evaluation of Radiation Doses to Body Tissues from Internal Contamination Due to Occupational Exposure, ICRP Publication 10, Pergamon, New York, 1968.

17. M. B. Sears, R. E. Blanco, B. C. Finney, G. S. Hill, R. E. Moore, and J. P. Witherspoon, Correlation of Radioactive Waste Treatment Costs and the Environmental Impact of Waste Effluents in the Nuclear Fuel Cycle - Conversion of Yellow Cake to Uranium Hexafluoride. Part I. The Fluorination-Fractionation Process, ORNL/NUREG/TM-7 (July 1977), pp. 271-80.

18. Draft Environmental Statement, Liquid Metal Fast Breeder Reactor Program, Vol. II, Environmental Impact of the LMFBR, USAEC, WASH-1535 (March 1974).

19. U.S. Nuclear Regulatory Commission, Final Environmental Statement Related to the Sequoyah Uranium Hexafluoride Plant, DOCKET No. 40-8027, NUREG-75/007 (February 1975), pp. III-9 to III-12, IX-4 to IX-7.

8.0 CORRELATION OF RADIOLOGICAL DOSE WITH COST OF WASTE TREATMENT

The relationships between the annual costs of the radwaste treatment systems described in Sects. 4.0 and 6.0 and the environmental impact of radioactive releases (50-year dose commitment) described in Sect. 7.0 are presented here for a model SX-F UF_6 plant. The accuracy of the cost estimates is about ±30%, and the dose commitments represent maximum values. The effect of the various waste treatment methods on chemical releases is also noted, although the study does not address the environmental effects of chemical releases. The major emphasis of the study is on a plant processing a feed containing 2800 pCi of ^{230}Th and 200 pCi of ^{226}Ra per gram of U_{nat} (Sect. 8.1). This "low-impurity" feed is a composite of the yellow cake produced by domestic mills in recent years.[1] For comparative purposes, the assessment of a plant processing feed containing "high" levels of ^{230}Th and ^{226}Ra is considered in Sect. 8.2. The discussion generally refers to the midwestern site, which is representative of the industry today and seems likely to be typical of the near future. Relationships are also given in the tables for a New Mexico site to illustrate the effect of siting a refinery near the mills.

The base case (Case 1) represents the minimum treatment necessary to operate the process. The principal objective is to recover the uranium and nitric acid when the economic value of the recovered product exceeds the treatment cost; other objectives are to decrease the amount of radioactive materials in liquid effluents and to reduce the emission of noxious fumes such as HF, NO_x, and H_2S, whose release would create unacceptable working conditions within the plant. Plant effluents are below the limits stipulated in 10 CFR 20, Appendix B, Table II, but may not be acceptable chemically at all sites. Case 2 treatment is about the practical limit of existing technology in the public domain. Much of the technology used in the advanced cases is not available for immediate use either because it is not fully developed or because it is proprietary. Many of the models for the movement and concentration of radionuclides in the environment are receiving additional study to increase their accuracy. In all cases, the various assumptions made in estimating the makeup of the feed to the plant,

selecting the flows to the waste treatment systems, and determining treatment efficiency ratings for equipment are realistically conservative.* Conservative (i.e., maximizing) assumptions are used to define the movement of radionuclides in the environment and to select food and liquid consumption patterns.

Costs are based on 1973 dollars to be consistent with other reports in this series. The cost of Case 1 waste treatment is considered to be a part of the base plant rather than an environmental protection cost since most Case 1 treatments are essential to the economic operation of the conversion process. The total annual costs for Cases 2-4 include all costs above Case 1 for treating airborne and liquid effluents and for storing solid waste on-site or packaging solids ready for shipment off-site. They do not include the costs of uranium recovery in cases where the economic value of the uranium justifies the treatment, shipment of solid waste off-site, final disposal of solids, decommissioning of the facility, or the added expense incurred by a uranium mill (in Case 4) of altering the chemical composition of the yellow cake. No credit is taken for recovered chemicals; however, credit is taken if Case 1 treatment is replaced by an advanced method. The costs do not include redundant (parallel) treatment units to ensure continued operation of complex systems in the event that one of the units should become inoperable. Emergency holding ponds are provided for the liquid nitrate-radwaste in Cases 3 and 4. The biological treatment system where a supply of actively growing biomass must be continuously maintained has parallel bioreactors.

Cost-vs-benefit comparisons are presented first in summary form for the combined waste treatment packages for each case and then separately for the major components. The gross comparisons mask many features, including the relative cost/benefit of alternative procedures. The annual costs of treatment systems that would reduce the amount of radioactive materials released in airborne effluents are analyzed in conjunction with

---

*Source terms and flows are based on operating data if available. When data are not available, assumptions are chosen which tend to make the doses or costs slightly high.

the maximum doses to individuals and to population out to a distance of 55 miles (88 km). The dose commitments from the gaseous effluents are reported both for total body and for organs receiving doses higher than the total-body average (i.e., bone, lung, and kidney). Other body organs that are discussed in Sect. 7.0, but will not be considered here, are GI tract, thyroid, muscle, liver, spleen, testes, and ovaries. The annual costs of liquid treatment systems are correlated with the total-body and bone doses to individuals from a 15-cfs stream and a 1300-cfs river, and also with the chemical releases. All settling basins and ponds are lined with synthetic material and provided with an underground seepage assessment system to minimize losses of radioactive materials. Case 4 also includes incorporation of the solid radwastes that contain the bulk of the radioactive materials in cement. The cement medium provides additional isolation from the environment in case the integrity of the drum should fail and reduces the potential for leaching by natural waters as well as providing a radon diffusion barrier. This would probably be considered a conservative treatment at a semiarid site. At other sites with high rainfall, high water tables, or geologic faults, such treatment becomes more beneficial.

8.1 Cost and Benefit Correlations for the SX-F Model Plant Processing Feed Containing "Low" Levels of ^{230}Th and ^{226}Ra Impurities*

8.1.1 Cost and benefit summary for combined waste-treatment packages

The total annual costs for reduction of the radiological dose commitment and chemical exposure to the population surrounding the model SX-F UF_6 production plant processing the "low-impurity" feed are summarized in Tables 8.1 and 8.2 for the midwestern and New Mexico sites. The amount of solid waste generated by the advanced liquid waste treatment systems is included since this waste increases the amount of land permanently committed. The total annual cost increases over the base-case range from \$712,000 for Case 2 to \$3,362,000 for Case 4 at the midwestern site, equivalent to a contribution to power cost of 0.0013 to 0.0062 mill/kWhr.

---

*Plant feed contains 2800 pCi of ^{230}Th and 200 pCi of ^{226}Ra per gram of U_{nat}.

The estimated capital cost of the base plant, including the Case 1 off-gas treatment, is $35 million. The increases in capital costs range from $2.23 million for Case 2 to $7.90 million for Case 4, or 6 to 23% of the cost of the base plant.

8.1.2 Cost and benefit correlations for airborne effluents

The total annual cost increase for reduction of the dose and gaseous HF exposure from all airborne effluents is presented in Table 8.3 for the midwestern site. For the base plant, the maximum annual individual dose commitments at 0.5 mile (800 m) are 3.0 mrem to the total body and 28 mrem to the bone (the highest organ dose), and the annual total population doses out to 55 miles (88 km) are estimated as 3.2 person-rem to the total body and 26 person-rem to the bone. These doses are for a base plant containing only treatment essential to the economic operation of the process. In the base case, the dust control effluent from dry materials handling contributes ∿50% of the dose, the process off-gas ∿30%, and the building ventilation effluent ∿20% (Tables 8.3a-8.3c). The addition of secondary bag filters and scrubbers on the process at an annual cost of $255,000 reduces the maximum individual doses to 1.0 mrem total body and 9.4 mrem bone. The cost/benefit ratio of the dose reduction from Case 1 to Case 2 is high -- $130,000/mrem total body and $13,000/mrem bone for the fencepost individual, or $120,000/person-rem total body and $11,000/person-rem bone for the general population, out to 55 miles (88 km) at the midwestern site. Case 2 also reduces the airborne HF release from 24 kg/day to 0.4 kg/day. This is about the practical limits of present-day technology. Further dose reductions using advanced technology are possible, but expensive; an annual cost of $617,000 in Case 3 reduces the maximum dose to the individual to 0.4 mrem total body and 4 mrem to the bone, while an annual cost or $1461 (Case 4) further reduces the doses to 0.002 mrem total body and <0.1 mrem to any organ. The Case 3 costs in Table 8.3 are not directly comparable to those for the other cases because they include $137,000 for secondary bag filters to control radwaste dusts generated by the liquid and solid waste treatment systems. (These streams are not present in Cases 1, 2, and 4.) Costs of the other dust collectors for the advanced liquid radwaste treatment systems are included in Table 8.5 as a liquid waste cost.

8.1.2.1 Process dust control. Cost/benefit relationships are presented in Tables 8.3a and 8.4a for the process dust control (excluding dusts generated by liquid waste treatment systems). The addition of secondary bag filters in Case 2 at an annual cost of $198,000 lowers the maximum individual total-body dose from dust control air from 1.5 mrem to 0.2 mrem and the bone dose from 15 mrem to 2 mrem (midwestern site, Table 8.3a). The incremental annual cost-benefit for the total population is $140,000/person-rem total body and $18,000/person-rem bone. HEPA filters (Case 4) are effective, but expensive, in further reducing the dose.

8.1.2.2 Process off-gas (radiological assessment). In Case 2, the addition of a high-energy venturi scrubber to the reduction off-gas and secondary scrubbers to the hydrofluorination, fluorination, and fluorine cell off-gases at an annual cost of $57,000 reduces the maximum individual bone dose from 7 mrem/year to 1 mrem/year and HF release from 24 kg/year to 0.4 kg/year. The incremental cost/benefit for the general population is $69,000/person-rem total body and $9,500/person-rem bone (Tables 8.1, 8.3b, and 8.4b). Fluorination is the source of ∿75% of the radioactive materials (Table 4.6a). Therefore, treating the fluorination stream alone at an annual cost of $11,000 will be almost as effective in reducing the dose as treating all the process off-gas streams, but will have only a small effect on the HF release (Table 4.7). Case 3 treatment of the ash degassing and UF_6 sampling stream is of marginal benefit since this stream carries little uranium (Table 8.4b). In Case 4, most of the radiological benefit comes from the UF_6 cleanup reactor and the HEPA filters. The study assumes that savings in uranium recycle costs will be sufficient to cover the cleanup reactor once the technology becomes available; the cost of the HEPA filters is $2,400/year. The -84°C condensers (∿$120,000/year), which are included to reduce the amount of HF in the process off-gas, have a negligible effect on radiological releases.

8.1.2.3 Building ventilation effluent. Treatment of the building ventilation effluent with baffle (orifice) scrubbers will reduce the maximum annual individual total-body dose at the midwestern site by ∿0.5 mrem and the bone dose by ∿5 mrem (Table 8.3c, Case 3). This is

expensive because of the large volume of air that must be treated -- $380,000/person-rem total-body and $44,000/person-rem bone (Table 8.4c).

8.1.2.4 Radwaste drying and drumming. The maximum individual total-body and bone doses for drying and drumming the radwaste solids in Case 3, assuming primary and secondary bag filters on the off-gas, are estimated as 0.03 and 0.78 mrem respectively (Table 7.4d). Without the secondary bag filters ($120,000/year) these doses would be approximately seven times higher, or 0.2 and 6 mrem. The secondary bag filters are included to be consistent with the Case 3 philosophy. However, if radwaste drying were used in combination with Case 2-level airborne treatment, the secondary bag filters could be omitted with some cost savings and still meet the 40 CFR 190 environmental standards of 5 mrem maximum to the total body and 25 mrem maximum to any organ other than thyroid.

8.1.2.5 Hydrogen fluoride. Fluorides are a matter of concern in the environment.[2] The most important effect appears to be fluorosis of cattle caused by ingestion of vegetable matter that has collected fluoride-containing dusts. In addition, many plants are susceptible to HF in concentrations as low as 0.02 to 0.05 ppm. Hydrofluorination and the fluorine cells are major sources of HF in the base case, contributing 35 and 42%, respectively, of the total released (Table 4.7). Hydrogen fluoride releases can be reduced from 24 kg/day to 6 kg/day by adding a KOH scrubber to each of these off-gas treatment systems at a total annual cost of about $34,400. If a KOH scrubber is also added to the fluorination stream, the HF release is further reduced to 0.4 kg/day at an annual cost of $11,200. Case 2 adds secondary scrubbers for HF on all three streams. Case 4 has a more efficient fluorine cleanup reactor and more efficient condensers to lower the HF concentration in the process off-gas. The savings in fluorine cost is assumed to cover the cost of the cleanup reactor when the technology becomes available. The -84°C consensers, which have an additional annual cost of ∿120,000, reduce the HF release by only about 0.13 kg/day. Although these condensers cannot be justified from an off-gas standpoint, they serve as a means of reducing the load to the liquid fluoride waste treatment systems (Sect. 8.1.3.3).

8.1.2.6 Other airborne chemical releases. Other gaseous chemical releases from the process include an estimated 440 kg of hydrocarbons (hexane), 260 kg of NO_2, and 27 kg of SO_2. In addition, there will be combustion products from heating the plant and operating motor vehicles, as well as effluents from some of the liquid waste treatment systems (e.g., the Case 3 lime furnace or Case 4 NO_x absorber). In the rural environment typical of the conversion industry, these releases are not presently a matter of concern; thus, no treatment is provided beyond the base case.

8.1.3 Cost and benefit correlations for liquid and solid waste-treatment systems

In the base case, the annual individual total-body and bone doses from liquid effluents after dilution by the 1300-cfs (37-m^3/sec) river are 0.01 and 0.15 mrem respectively (Table 8.5). Doses from using the waters of the 15-cfs (0.4-m^3/sec) stream are 90 times higher. However, it is unlikely that an individual would routinely use the 15-cfs stream as a source of drinking water or fish, or as a locale for swimming, because of its small size and the high chemical content--20 MT/day. Case 1 illustrates that, at most sites, relatively simple treatment with $BaCO_3$ (to remove 99% of the radium) followed by lime neutralization is sufficient to remove most of the radioactive materials. For the model SX-F UF_6 plant, the release or potential for release of large quantities of chemicals, particularly nitrate and fluoride, is of greater concern than the radiological releases. Therefore, the primary emphasis of the liquid waste treatment case studies is the removal of chemicals, although radioactive materials are also removed.

The costs of the liquid waste treatment systems, including handling the solids generated by these systems, are correlated with the doses from the 1300-cfs stream and with the chemicals released in Table 8.5. The total annual cost increase to the UF_6 plant operator for the liquid waste treatment packages ranges from $456,000 in Case 2 to $2.0 million in Cases 3 or 4.

8.1.3.1 Liquid nitrate-radwaste treatment systems. The principal radwaste generated by the model SX-F UF_6 plant is the liquid nitrate waste from solvent extraction. This waste contains unrecovered uranium, ^{230}Th, and ^{226}Ra (impurities in the yellow cake feed) along with short-lived ^{234}Th and ^{234m}Pa as soluble nitrates dissolved in the waste, and large quantities of chemicals including nitrate, ammonium, sodium, toxic heavy metals, sulfate, and chloride.

The base case for the assessment is treatment with $BaCO_3$ to remove 99% of the radium followed by lime neutralization. The radwaste solids are impounded, and the treated waste carrying traces of radioactive materials and about 19 MT of chemicals per day, including 14 MT of nitrate and 1 MT of ammonium salts, is released. The effluent, although acceptable radiologically, may not be acceptable chemically at many sites.

Both nitrate and ammonium ions can have a deleterious effect on the environment.[3] Excessive plant growth from biostimulation of aquatic growth in the receiving waters and/or algae blooms from overfertilization has caused the most attention. Eutrophication is of particular concern in lakes because nutrients that enter tend to be recycled and to build up over a period of time. Other deleterious effects include acute nitrate toxicity (methemoglobinemia) in infants, and for ammonia: toxicity to fish, reduction in chlorine disinfection efficiency, and depletion of the dissolved oxygen content of the receiving waters. The 40 CFR 141 drinking water standard for nitrate is 10 mg maximum of NO_3^--N per liter. The Case 1 effluent requires dilution by a stream with a flow of at least 150 cfs (4 m^3/sec) to meet the drinking water standard. There may also be other sources of nitrate to the receiving stream such as municipal wastewater or runoff from dairies, feedlots, or fertilized land which must be considered. After dilution of the effluent by a 150-cfs stream, the NH_4^+-N concentration in Case 1 is 2.4 mg/ℓ. Depending on the pH of the receiving stream, this may be marginally toxic to fish.

Case 2, at an annual cost increase over the base case of $304,000, provides impoundment of the liquid nitrate waste at the midwestern site. The cost at the New Mexico site, where the natural evaporation rate is higher, is $183,000. Impoundment is a temporary solution; however, it is

the only fully developed and immediately available alternative to releasing the nitrate waste. Additional costs (and perhaps radiological exposure) may be incurred in disposing of the accumulated nitrate wastes when the lagoons are decommissioned. In Case 2, the potential exists for accidental releases of nitrate and radioactive materials via failure of the dike; seepage could also occur if the integrity of the liner should fail.

The advanced case studies add treatment which provides a long-term solution to the nitrate wastes. Case 3 uses biological nitrification and denitrification in a system similar to an activated sludge sewage plant to destroy the ammonium and nitrate ions. The treated wastewater (principally $NaHCO_3$) is then released to a surface stream; the radiological doses are similar to Case 1. Case 4 uses thermal denitration of $MgNO_3 \cdot 6H_2O$ with nitric acid recovery from the off-gas for recycle. It includes an ozone sparge to prevent the chloride from accumulating in the recycle acid circuit, has evaporators to recover water for recycle, and recovers a 28 wt % ammonia solution suitable for off-site industrial use. Rectifier overheads containing an estimated 8 kg of nitrate per day are released, but there are no effluents bearing radioactive materials. Sodium ions create serious difficulties in the calciner; therefore Case 4 places new low-sodium restrictions on the plant feed.

There appears to be little difference in the annual cost of the advanced nitrate treatment systems -- $1.53 million for Case 3 compared with a Case 4 cost of $1.05 million to the UF_6 plant operator plus a very rough estimate of $0.55 million to the mill operators in meeting the low-sodium feed specification. Case 4 is more fail-safe since there is no danger that toxic materials will cause system poisoning, which could occur in a biological treatment system; however, it has the disadvantage that backfitting would be necessary to some mills to produce the low-sodium yellow cake. Neither the Case 3 biological denitration system nor the Case 4 thermal denitration system has been tested experimentally on uranium refinery wastes. Research and development would be required before either would be ready for industrial use.

The costs are the total annual cost increase over the base case for the complete systems described in Sect. 4.4.11.6 or 4.4.11.7, except for handling the solid radwaste where different options might be considered (Sect. 8.1.3.2). Development costs are not included. In Case 3, the costs include disposal of the biomass by incineration, calcining the $CaCO_3$ to recover the lime, lime slaking, and primary dust collectors. In Case 4, the costs include an impoundment with a synthetic liner for the $CaSO_4 \cdot 2H_2O$ chemwaste, slaking and purifying the magnesia for recycle, and appropriate dust collectors. Ordinarily, biological systems are thought to function mostly on "free" solar energy. It should be noted that Case 3 requires 9500 ℓ (2500 gal) of methanol as nutrient for the denitrifying bacteria and calcines 7.2 MT of $CaCO_3$ per day.

8.1.3.2 Solid radwaste management. The principal solid radwaste is the sludge generated in treating the nitrate wastes from solvent extraction. These wastes contain unrecovered uranium at levels comparable to uranium ores, plus small quantities of ^{226}Ra and ^{230}Th which are present as impurities in the yellow cake feed to the plant. The wastes are a potential long-term source of ^{222}Rn gas from the decay of ^{226}Ra.

In Cases 1 and 2, the radwaste sludge is impounded on-site in a lined basin. Final disposition of this waste is at present unclear, but ultimately it is expected to be shipped off-site with final disposal either in a burial ground or in a mill tailings pile. If wastes are shipped wet to a uranium mill for processing to recover the uranium, the cost and radiological releases from packaging will be relatively small. Case 3 provides for drying and drumming the solids at an annual cost increase of $315,000. This includes the cost of primary bag filters for the dryer and drumming station. The cost of secondary bag filters ($120,000) is included in Table 8.3 with the airborne costs; the airborne releases are discussed in Sect. 8.1.2.4. In Case 4, the radwaste solids are incorporated in cement to provide better isolation from the environment if the integrity of the drums should fail; the annual cost of cementing Case 4 radwaste is $741,000. This does not include the additional costs for shipping or burial of the cemented waste. The solid radwaste case studies are not

directly comparable because the different liquid nitrate treatment systems generate different quantities of solid radwaste (Table 4.27). As a less expensive alternative, the cost of drying and drumming the Case 4 radwaste is $273,000 with primary bag filters, or $374,000 with primary and secondary bag filters. The cost of cementing and drumming the Case 3 solid waste would be roughly 1.7 times that in Case 4 because of the larger quantity of waste.

Cementing reduces the potential long-term radon release as well as the potential for leaching by natural waters. The potential benefit of cementing the radwaste sludge must be evaluated in terms of a specific waste disposal site, which is beyond the scope of this survey.

8.1.3.3 Liquid fluoride treatment systems. The concern with these wastes is primarily chemical since they have low concentrations of radioactive materials, especially radium. Although traces of fluoride are beneficial in drinking water, the upper limit for a public water supply is only 3 ppm (40 CFR 141). The base case uses a "free" supply of calcium ions (lime-treated nitrate waste) to precipitate the fluoride and impound the chemwaste solids in a lined basin. The treated effluent from the KOH scrubbers carries about 1300 kg of potassium ions per day. Chemical releases of caustic scrub liquors can be eliminated by a KOH regeneration system, and chemical releases via water scrub liquors can be reduced to low levels by lime treatment at an annual cost increase of $152,000 (Table 8.5, Cases 2 and 3). More efficient condensers and cleanup reactors on the process reduce the fluoride load to waste treatment in Case 4. Since the condensers are of negligible benefit in terms of off-gas releases, the costs of the condensers are also shown as a liquid treatment cost in Case 4. The analysis indicates that, even if Case 4 technology were available, the savings in the liquid treatment costs would not justify the installation of the condensers. Case 4 also includes two fluoride basins - one for KOH-contaminated solids and a settling basin for the water scrub liquor from the fluorine cells, which is released. The small reduction in chemical releases (i.e., 84 kg/day) and in dose (<0.001 mrem total body) does not justify this feature.

8.2 Cost and Benefit Correlations for the SX-F Model Plant Processing Feed Containing "High" Levels of ^{230}Th and ^{226}Ra Impurities

Recent sampling of UF_6 plant feed indicates that the "low" levels of ^{230}Th and ^{226}Ra, impurities cited in Sect. 8.1, are the most probable concentrations that will occur in the plant feed. While unlikely, it is possible that higher concentrations might occur. For comparison, an assessment of a model plant for a feed containing "high" levels of ^{230}Th and ^{226}Ra (e.g., 14,200 pCi of ^{230}Th and 1600 pCi of ^{226}Ra per gram of U_{nat}) is considered briefly. The total annual cost increases for the waste treatment packages are compared with the dose and exposure to chemicals in Tables 8.6 and 8.7 for the midwestern and the New Mexico sites respectively. Costs are essentially the same as those cited in Sect. 8.1. The maximum individual total-body dose is reduced from 4.0 mrem in Case 1 to 1.8 mrem in Case 2, and the bone dose from 53 mrem to 21 mrem. The population total-body dose is reduced from 3.8 person-rem in Case 1 to 1.6 person-rem in Case 2. The bone doses are nearly twice those from the plant processing the "low-impurity" feed (Table S-2). For airborne Case 1/2, the incremental cost/benefit is $116,000 per person-rem total body and $9,000 per person-rem bone. Individual doses at the New Mexico site are higher than at the midwestern site; however, population doses are much lower because the area is sparsely settled (Table 8.7). Further airborne dose reductions beyond Case 2 are possible but more expensive.

The estimated doses to the individual receiving the maximum exposure represent the probable upper limit for the "high-impurity" feed. They are based on a number of maximizing assumptions, which would probably not apply collectively to any one plant. Doses from a specific plant might be significantly lower than the doses estimated for the generic model. For example, the use of a 100-ft (30-m) release height instead of a 16-ft (5-m) height would reduce the maximum dose to an individual by a factor of 3 (Table 7.11). Removing the land in the immediate vicinity of the plant from food production would reduce the dose to the bone (the critical organ) by about 30% (Table 7.21).

The relationships for treating liquid effluents from the model plant processing the "high-impurity" feed are similar to those for the "low-impurity" feed. The model assumes that more efficient $BaCO_3$ treatment for

99.8% radium removal is applied in the base case. Under these conditions, the annual total-body and bone doses from using the 1300-cfs river are 0.02 and 0.3 mrem, respectively, in Case 1.

Solid wastes are similar to those described in Sect. 1.3, except that they will contain larger quantities of ^{230}Th, ^{226}Ra, and associated daughter products.

8.3 Radon

A small amount of ^{222}Rn gas is released in Cases 1 and 2 from the radwaste impoundment, and in all cases from the operating plant for which no treatment is provided.* In Case 2, at the midwestern site which has the largest radwaste impoundment, this release is estimated as ∿310 Ci/year for the plant feed containing "low" levels of ^{226}Ra impurity (e.g., 200 pCi per gram of U_{nat}). At 0.5 mile (800 m) from the model plant, radon contributes only 0.06 mrem to the maximum individual total-body dose and 2.7 mrem to the lung dose (the critical organ). Because radon is a gas, it can spread beyond the immediate vicinity of the plant. The annual radon release from the model Case 2 SX-F UF_6 plant is comparable to the natural radon emanation from ∿3.8 square miles (10 km^2) of ground, or ∿1 x 10^{-4} % of the radon release from soils in the conterminous United States.** The half-life of radon is short (3.8 days), and the particulate daughters are removed from the atmosphere by deposition and washout. The average residence time is ∿4 days for aerosols of radon daughters in the atmosphere near the earth's surface.[5] In urban areas around New York City, even the short-lived daughters that contribute most of the radon dose are not in secular equilibrium with the natural background radon. For example, ^{218}Po, the first daughter (half-life, 3 min), and ^{214}Pb, the second daughter (half-life, 27 min), are present in concentrations of ∿80 and ∿50% of

---

*There is also a small long-term release of radon from the decay of ^{226}Ra in the wastes that are shipped off-site to an approved repository for burial. Releases from the burial ground are not addressed in this study; however, they are expected to be small in comparison with the long-term radon release from mill tailings, which contain much more ^{226}Ra.

**The natural radon flux in the United States appears to be ∿1.7 atoms/cm^2·sec (3.0 x 10^{-5} Ci/m^2·year).[4] If this value is assumed to represent the average rate, it is estimated that the conterminous United States (7.6 x 10^2 m^2 in area) releases 2.3 x 10^8 Ci of ^{222}Rn annually.

secular equilibrium respectively.[6] These facts argue that the effects of radon from an operating SX-F UF_6 plant will be small compared with those of natural background radon.

8.4 References

1. M. B. Sears, R. E. Blanco, B. C. Finney, G. S. Hill, R. E. Moore, and J. P. Witherspoon, Correlation of Radioactive Waste Treatment Costs and the Environmental Impact of Waste Effluents in the Nuclear Fuel Cycle - Conversion of Yellow Cake to Uranium Hexafluoride. Part I. The Fluorination-Fractionation Process, ORNL/NUREG/TM-7 (July 1977), pp. 271-80.

2. W. L. Faith and A. A. Atkisson, Jr., Air Pollution, 2nd ed., pp. 163-80, Wiley-Interscience, New York, 1972.

3. U.S. Environmental Protection Agency, Technology Transfer, Nitrogeneous Materials in the Environment and the Need for Control in Wastewater Effluents", Chap. 2 in Process Design Manual for Nitrogen Control (October 1975), pp. 2-1 to 2-16.

4. M. H. Wilkening, W. E. Clements, and D. Stanley, "Radon-222 Flux Measurements in Widely Separated Regions," p. 726 in The Natural Radiation Environment II, ed. by J. A. S. Adams, W. M. Lowder, and T. F. Gesell, CONF-720805-P2 (1972).

5. H. E. Moore, S. E. Post, and E. A. Martell, "Tropospheric Aerosol Residence Times Indicated by Radon and Radon Daughter Concentrations," pp. 775-85 in The Natural Radiation Environment II, J. A. S. Adams, W. M. Lowder, and T. F. Gesell, CONF-720805-P2 (1972).

6. A. C. George, "Indoor and Outdoor Measurements of Natural Radon and Radon Daughter Decay Products in New York City Air," pp. 741-50 in The Natural Radiation Environment II, J.A.S. Adams, W. M. Lowder, and T. F. Gesell, CONF-72085-P2 (1972).

9.0 TABLES

Table 1.1. Summary of radwaste-chemwaste treatment variables for the model solvent extraction—fluorination UF_6 conversion plant

	Case 1	Case 2	Case 3	Case 4
Gaseous and airborne radwaste				
Objective	Base case; control uranium losses and release of noxious gases	Reduce uranium releases by 3; reduce HF release by 60	Reduce uranium releases in building ventilation effluent by 14 (net overall reduction 3)	Reduce uranium releases by 450; reduce HF release by 1.4
Treatment	Primary bag filters on dust-bearing air from materials handling processes; primary and secondary filters on chemical reactors; primary scrubbers on HF-bearing effluents	Same as Case 1 plus secondary bag filters; secondary scrubbers on some HF-bearing effluents	Same as Case 2 plus water baffle scrubbers on building ventilation effluent	Same as Case 2 plus HEPA filters on process effluents; bag filters on building ventilation effluent; more efficient HF condensers and F_2 cleanup reactor; internal process change for more efficient F_2 utilization; UF_6 cleanup reactor
Liquid nitrate radwaste				
Objective	Control release of radioactive materials	Control release of radioactive materials and chemicals	Control release of radioactive materials and chemicals; provide acceptable long-term disposal of nitrate and ammonium salts	Zero release to surface streams of liquid effluents bearing radioactive materials; provide acceptable long-term disposal of chemicals
Treatment	$BaCO_3$ treatment to precipitate radium; lime neutralization to precipitate radwaste; release nitrate	NH_3 neutralization to precipitate radwaste; impound nitrate in lined lagoon	$BaCO_3$ treatment to precipitate radium; lime neutralization to precipitate radwaste-chemwaste; biological nitrification and denitrification to destroy ammonium and nitrate salts; release treated wastewater	$BaCO_3$ treatment to precipitate radium; magnesia neutralization to precipitate radwaste; lime treatment to precipitate chemwaste; recover HNO_3, H_2O, and MgO for recycle; recover ammonia as 28 wt % solution for industrial use; requires internal process changes at uranium mill and at UF_6 plant to eliminate sodium salts in the waste
Liquid fluoride chemwaste				
Objective	Minimal treatment	Control chemical releases	Control chemical releases	Zero release to surface streams of liquid effluents bearing radioactive materials; negligible release of chemicals
Treatment	Combine with other plant wastes containing Ca^{2+} to precipitate fluoride	Lime regeneration and recycle of KOH scrub liquors; precipitate fluoride from water scrub liquors with lime and release	Same as Case 2	Reduce fluoride load to waste treatment by more efficient use of HF and F_2 in process; lime regeneration and recycle of KOH scrub liquors; eliminate hydrofluorination water scrubber; treat water scrub liquor from fluorine cell off-gas with lime, and release (no radioactive materials)
Solid radwaste generated by treating liquid nitrate waste				
Objective	Store on-site	Store on-site	Prepare for shipment off-site	Reduce potential for long-term leaching and radon release
Treatment	Settle sludges in lined basin; control any loose radioactive particles to prevent windblown dust	Impound with nitrate in lined lagoon; control any loose radioactive particles to prevent windblown dust	Dry and drum	Incorporate moist centrifuge cake in cement; drum ready for shipment off-site
Solid chemwaste generated by treating liquid wastes				
Objective	Store on-site	Store on-site	Store on-site	Store chemwastes with low solubility in water on-site; prepare soluble wastes for shipment
Treatment	Settle CaF_2 solids in lined basin	Settle CaF_2 sludges from treating water scrub liquors in lined basin; store CaF_2 filter cakes from KOH regeneration in lined basin	Same as Case 2	Dry and drum calcine bleed (Na and K salts) from HNO_3 recovery ready for shipment; store slightly contaminated $CaSO_4$ from HNO_3 recovery in lined chemwaste pit; store slightly contaminated CaF_2 in fluoride pit; settle uncontaminated CaF_2 from treating water scrub liquors from the fluorine cells in lined fluoride basin (i.e., three lined storage basins in Case 4)

Table 4.1. Uranium refining and hexafluoride production

Plant	Location	Sampling	"Dry" purification - fractional distillation	"Wet" purification										UO_3 reduction to UO_2		UO_2 hydrofluorination to UF_4			Fluorination to UF_6		Enriched UF_6 from enriched scrap or recycle	UF_4 reduction to U metal		Hydrolysis of enriched UF_6 to UO_2	Conversion of enriched UO_2 to U metal
					Solvent extraction			Denitration																	
				Digestion	TBP-hexane	TBP-kerosene	TBP-dodecane	Stirred pot (batch)	Stirred trough (continuous)	Fluidized bed	Rotary tube calciner	ADU (ammonium diuranate ppt and calcination)	Fluidized bed	Moving bed	Fluidized bed	Moving bed	Stirred bed (ribbon screw)	Flame tower	Fluidized bed		Magnesium	Calcium		
Allied Chemical	Metropolis, Ill.	a	a										a		a				a					
Kerr-McGee	Sequoyah County, Okla.	b		b	b				b				b		b			b						
DOE-Fernald (standby)	Cincinnati, Ohio	c		c		c		d					d				d				d			
DOE-Paducah	Kentucky	e											f		g			f						
DOE-Portsmouth (20 metric ton/year)	Ohio	h									h							h		h				
AEC-Weldon Spring (closed)	Missouri	e		i	i			i					i				i				i			
Eldorado	Canada	e		j		j		k				j		j		j		j			j		j	j
Malvesi	France	l		l				l				l		m		m						l		
Springfields	Great Britain	n		n		n				o		p	o		o				k		p		p	p

[a] W. C. Ruch, D. A. Peterson, E. A. Gaskill, and H. G. Tepp, "Production of Pure Uranium Hexafluoride from Ore Concentrates," Chem. Eng. Progr., Symp. Ser. Pt. 15, 56, 35-41 (1960).

[b] Kerr-McGee Corporation, Applicants Environmental Report Sequoyah Uranium Hexafluoride Production Plant, DOCKET 40-8027 (June 1972), pp. 40-50.

[c] C. D. Harrington and A. E. Ruehle, Uranium Production Technology, Van Nostrand, Princeton, N. J., 1959, pp. 152-64.

[d] E. W. Mautz, Production of Uranium Tetrafluoride and Uranium Metal, NLCO-1068 (Apr. 23, 1970).

[e] Essential but not mentioned specifically in reference.

[f] C. A. Powell, "Current Manufacturing Processes Used in the United States for Mass Production of UF_6 from Purified UO_3," Paper P/1840, Proc. U.N. Conf. Peaceful Uses At. Energy, 2nd, Geneva, 1958, 4, 165-71 (1958).

[g] D. C. Brater, D. L. Castro, L. A. Dean, J. H. Pashley, and S. H. Smiley, "Development and Production Experience with Mechanically Agitated Fluid Beds as Applied to the Hydrofluorination of Fine Uranium Powders," Chem Eng. Progr., Symp. Ser. Pt. 15, 62, 1-11 (1962).

[h] J. G. Crawford, Fluorination of All Enrichments of Uranium Oxides, GAT-P-43 (June 24, 1968).

[i] H. E. Thayer, "The Newest United States Uranium Processing Plant," Paper P/602, Proc. U. N. Intern. Conf. Peaceful Uses At. Energy, 2nd, Geneva, 1958, 4, 22-29 (1958).

[j] R. M. Berry, Can. Inst. Min. Met. Bull. 62(690), 1093-99 (1969).

[k] P. G. Alfredson, "Review of Methods and Technology for the Production of Uranium Hexafluoride," AAEC Symposium on Uranium Processing, Lucas Heights, 20-21, July 1972, AAEC/E238, Paper VIII, pp. 9, 14 (September 1972).

[l] M. Blanvillain, Bull. Inform. Sci. Tech. 80, 69-85 (1964).

[m] W. Haegi, L. Verot, and J. Muller, Energie Nucl. 10, 152-59 (1968).

[n] H. Page, L. P. Shortis, and J. A. Dukes, Trans. Inst. Chem. Engrs. 38(4), 184-96 (1960).

[o] E. Hawthorn, L. P. Shortis, and J. E. Lloyd, Trans. Inst. Chem. Engrs. 38(4), 197-207 (1960).

[p] R. C. Alexander, L. P. Shortis, and C. J. Turner, Trans. Inst. Chem. Engrs. 38(4), 177-83 (1960).

Table 4.2. Feed to the model yellow cake-to-UF_6 conversion plant - Cases 1 and 2[a] (Assumptions listed in Table 4.3)

Constituent of feed	Concentration (wt %)	Quantity fed (metric tons/yr)
Uranium (U)	73.53	10,000
	(wt %, U basis)	
Impurities		
Ammonium (NH_4^+)	3.09	322
Sodium (Na)	2.41[a]	241[a]
Silica (SiO_2)	1.2	120
Sulfate (SO_4^{2-})	2.94	294
Arsenic (As)	0.06	6
Boron (B)	0.003	0.3
Calcium (Ca)	0.19	19
Carbonate (CO_3^{2-})	0.31	31
Chloride, bromide, iodide (Cl^-, Br^-, I^-) calc. as Cl^-	0.07	7
Fluoride (F^-)	0.01	1
Iron (Fe)	0.38	38
Molybdenum (Mo)	0.10	10
Phosphate (PO_4^{3-})	0.26	26
Potassium (K)	0.13	13
Vanadium (V)	0.12	12
Water (H_2O)	1.91	191
Extractable organics	0.05	5
Nitric acid-insoluble uranium	0.01	1

Principal radionuclides	(Ci/year) "Low-impurity" feed	"High-impurity" feed
U_{nat}[b]	3333	3333
^{234}Th	3333	3333
^{234m}Pa[c]	3333	3333
^{230}Th	28	141.7
^{226}Ra	2.0	15.67
^{222}Rn	2.0	15.67

[a]Sodium ions are excluded from the feed in Case 4 because they create difficulties in the advanced waste treatment systems. In Case 3, restriction of sodium salts is suggested as a possible option.

[b]The "old" (prior to July 10, 1974) definition of a curie of natural uranium (U_{nat}) is used throughout this report to be consistent with the earlier report in this series on uranium mills. One curie of U_{nat} is the sum of 3.7×10^{10} dis/sec from ^{238}U, plus 3.7×10^{10} dis/sec from ^{234}U, plus 9×10^8 dis/sec from ^{235}U. Under the "old" definition, 1 kg of U_{nat} is equivalent to 333.3 μCi of U_{nat} or the sum of 333.3 μCi of ^{238}U, 333.3 μCi of ^{234}U, and 8.1 μCi of ^{235}U. Under the current (July 10, 1974) definition, 1 kg of U_{nat} is equivalent to 677.0 μCi of U_{nat}, or the sum of 330.9 μCi of ^{238}U, 330.9 μCi of ^{234}U, and 15.4 μCi of ^{235}U. There is approximately a 1% difference between the "old" and the "new" curie in calculating source terms, except for ^{235}U.

[c]Metastable ^{234m}Pa, $t_{1/2}$ = 1.18 min.

Table 4.3. Assumptions used in calculating feed to the model yellow cake-to-UF_6 conversion plant

1. The feed is a composite of:

   85% acid-leached yellow cake which has been precipitated by addition of ammonia and steam dried.

   15% alkaline- (carbonate-) leached yellow cake which has been precipitated with sodium hydroxide and dried.

   The proportion of acid- vs alkaline-leached yellow cake was calculated from the relative ore processing rates, based on a survey of active mills made in the spring of 1973.[a]

2. The acid-leached yellow cake is a partially cracked ammonium diuranate. Half the uranium is assumed to be present as $(NH_4)_2U_2O_7$, and the other half as UO_3. Its chemical composition is:

   U = 74.20 wt % (av of ammonium diuranate received at the Kerr-McGee UF_6 plant in 1973)[b]

   Na = 0.85 wt % on a U basis (av of ammonium diuranate received at the Kerr-McGee UF_6 plant in 1973)[b]

   NH_4^+ = 3.63 wt % on a U basis (calculated)

3. Alkaline- (carbonate-) leached yellow cake is assumed to be $Na_2U_2O_7$ with a chemical composition of:

   U = 69.80 wt %
   Na = 11.3 wt % on a U basis (av of $Na_2U_2O_7$ received at the Kerr-McGee UF_6 plant in 1973)[b]

4. Impurities other than radionuclides, sodium, ammonium, and silica are the average of the current feeds to the Allied Chemical UF_6 plant,[c] the Kerr-McGee UF_6 plant,[b] and the DOE-Fernald refinery.[d]

5. The silica content is the average of values for four currently or recently active mills (Anaconda, Uravan, Rifle, and Kerr-McGee).[e]

6. The model UF_6 plant processes only virgin yellow cake (natural uranium) from United States mills (i.e., no recycle material from fuel reprocessing and no foreign ore concentrates).

7. The feed containing "low" levels of ^{230}Th and ^{226}Ra impurities is derived from recent data on the isotopic analysis of the feed to the Allied Chemical Metropolis UF_6 production plant,[f] that is:

   ^{230}Th = 2800 pCi per g of U_{nat}
   ^{226}Ra = 200 pCi per g of U_{nat}

8. The feed containing "high" levels of ^{230}Th and ^{226}Ra impurities is the composite product of the "model" uranium mills,[g,h] that is:

   ^{230}Th = 14,200 pCi per g of U_{nat}
   ^{226}Ra = 1600 pCi per g of U_{nat}

9. The yellow cake feed has aged 6 months (minimum) to 10 years (maximum) since milling in a sealed drum so that:

   (a) Thorium-234 ($t_{1/2}$ = 24.1 days) and ^{234m}Pa ($t_{1/2}$ = 1.18 min) daughters have grown back to secular equilibrium with ^{238}U. Thorium-234 requires 168 days to grow back to 99% of secular equilibrium with ^{238}U. Metastable ^{234}Pa requires approximately 7 min to grow back to secular equilibrium with ^{234}Th, so that it is in secular equilibrium with ^{234}Th at all times.

(continued)

Table 4.3 (continued)

(b) The radioactivity due to the decay, since milling, of ^{234}U to ^{230}Th ($t_{1/2} = 8.3 \times 10^4$ y and ^{235}U (only 0.71% of natural uranium) is negligible.

(c) The radioactivity due to the decay, since milling, of the ^{230}Th impurity to ^{226}Ra ($t_{1/2} = 1.62 \times 10^3$ y) is negligible.

(d) The ^{222}Rn daughter ($t_{1/2} = 3.83$ days) has grown back to secular equilibrium with the ^{226}Ra impurity. While the amount of ^{222}Rn accumulating in the sealed drum is small, radon is an inert gas and potentially all of it might be released from the plant.

(e) The daughter products of ^{222}Rn are not listed individually as source terms either because they have half-lives of less than 2 hr and do not accumulate in the bio-environment (^{218}Po, ^{214}Pb, ^{214}Bi, and ^{214}Po) or because they individually contribute less than 0.02% of the total relative hazard (^{210}Pb, ^{210}Bi, and ^{210}Po). The daughters of ^{222}Rn are included when the dose from radon release is calculated. The relative hazard is estimated by dividing the curies present in the yellow cake feed by the Radiation Concentration Guide for that nuclear nuclide (presented in Code of Federal Regulations, Title 10, Part 20, Appendix B, Table 2, Column 1, soluble nuclide). It takes approximately 11.6 years for ^{210}Pb to grow back to a level where it contributes 0.02% of the total relative hazard.

[a]M. B. Sears, R. E. Blanco, R. C. Dahlman, G. S. Hill, A. D. Ryon, and J. P. Witherspoon, Correlation of Radioactive Waste Treatment Costs and the Environmental Impact of Waste Effluents in the Nuclear Fuel Cycle for Use in Establishing "As Low As Practicable" Guides - Milling of Uranium Ores, ORNL-TM-4903, Vol. 1 (May 1975), p. 224.

[b]B. Brown (Plant Manager, Kerr-McGee Sequoyah UF_6 production facility) and J. Craig (Engineering Manager), personal communication to M. B. Sears, Oct. 15, 1974.

[c]A. D. Riley (Plant Manager, Allied Chemical UF_6 plant) and J. H. Thomas (Technical Superintendent), personal communication to M. B. Sears, Nov. 13, 1974.

[d]J. Cavendish (Head, Production Technology Dept., National Lead Co. of Ohio), personal communication to M. B. Sears, Nov. 12, 1974.

[e]G. P. Lang, E. N. Nelson, and C. W. Kuhlman, A Process for Controlling Insoluble Uranium in Ore Concentrates, MCW-1420, Mallinckrodt Chemical Works (Feb. 2, 1959), p. 13.

[f]M. B. Sears, R. E. Blanco, B. C. Finney, G. S. Hill, R. E. Moore, and J. P. Witherspoon, Correlation of Radioactive Waste Treatment Costs and the Environmental Impact of Waste Effluents in the Nuclear Fuel Cycle - Conversion of Yellow Cake to Uranium Hexafluoride, Part I. The Fluorination-Fractionation Process, ORNL/NUREG/TM-7 (Sept. 1977), pp. 271-72, and 278-80.

[g]Ibid., pp. 29, 162.

[h]M. B. Sears, R. E. Blanco, R. C. Dahlman, G. S. Hill, A. D. Ryon, and J. P. Witherspoon, Correlation of Radioactive Waste Treatment Costs and the Environmental Impact of Waste Effluents in the Nuclear Fuel Cycle for Use in Establishing "As Low As Practicable" Guides - Milling of Uranium Ores, ORNL-TM-4903, Vol. 1 (May 1974), pp. 32-33, 122-23 and 164.

Table 4.4. Efficiency of noxious gas absorbers

Type of gas absorber	Gas absorbed	Scrubbing medium	Efficiency (%)
Baffle (orifice) with condensers	Denitrator off-gas	40% HNO_3	∿70[a]
Wetted packed tower	UF_6	KOH	99[b]
	HF	KOH	99[c,d]
	F_2	KOH	99[c,d]
Medium-energy venturi	HF	Water	90[b]
High-energy venturi	HF	Water	95[e]
	HNO_3	Water	97[e]
	NO_2	Water	30[e]
	HF	KOH	99[f]
	UF_6	KOH	99[f]
	F_2	KOH	99[f]
	NO_2	KOH	85[g]
NO_x absorber tower (20-plate bubble tower)	NO_x	Water	95[h,i]

[a]Kerr-McGee Corporation, Applicants Environmental Report Sequoyah Uranium Hexafluoride Production Plant, DOCKET 40-8027 (June 1972), pp. 40-51.

[b]A. D. Riley (Manager Allied Chemical UF_6 plant), J. H. Thomas (Technical Superintendent), and R. W. Yates (Health Physicist), personal communication to M. B. Sears, Nov. 13, 1974.

[c]By analogy to UF_6.

[d]By analogy to HCl. [S. K. Kempner, E. N. Seiler, and D. H. Bowman, J. Air Pollut. Control Assoc. 20(3), 139-43 (1970)].

[e]L. S. Harris, Chem. Eng. Progr. 62(4), 55-59 (April 1966).

[f]By analogy to caustic scrubbing of Cl_2 (footnote e).

[g]By analogy to caustic scrubbing of H_2S (footnote e).

[h]B. J. Mayland and R. C. Heinze, Chem. Eng. Progr. 69(5), 75-76 (May 1973).

[i]Continuous operation; batch operation, 90%.

Table 4.5. Efficiency of wet dust collectors[a,b]

Type of dust collector	Average pressure drop (in. H_2O)	Efficiency (%) on: 5-μ dust	2-μ dust	1-μ dust
Baffle (orifice)	6.1	93	75	40
Spray tower	1.4	94	87	55
Packed tower (fluidized bed)	2.4	95		58
Wet impingement	6.1	97	95	80
Venturi				
Medium energy	20.4	99.8	99	97
High energy	31.5	99.9		98

[a]C. J. Stairmand, "Removal of Dust from Gases," pp. 364-402 in Processes for Air Pollution Control, 2nd ed., The Chemical Rubber Co., Cleveland, Ohio, 1972.

[b]C. J. Stairmand, The Chemical Engineer 194, CE 310-26 (December 1965).

Table 4.6a. Airborne radwaste releases from the model 10,000-metric ton/yr SX-F UF_6 plant -- Case 1

Type of release	U (kg/yr)	Principal radionuclides (Ci/yr)								
					"Low-impurity" feed option[c]			"High-impurity" feed option[d]		
		U_{nat}[a]	^{234}Th	^{234m}Pa[b]	^{230}Th	^{226}Ra	^{222}Rn[e]	^{230}Th	^{226}Ra	^{222}Rn[e]
Crude yellow cake dusts										
Materials handling	99.0	3.30E-2	3.30E-2	3.30E-2	2.77E-4	1.98E-5		1.40E-3	1.55E-4	
Building ventilation	39.6	1.32E-2	1.32E-2	1.32E-2	1.11E-4	1.79E-5		0.56E-3	0.62E-4	
Refined UO_3, UO_2, UF_4										
Materials handling	109.5	3.65E-2	1.82E-2	1.82E-2	1.54E-4	0.01E-5		0.78E-3	0.01E-4	
Reduction off-gas	28.3	0.94E-2	0.47E-2	0.47E-2	0.39E-4	<0.01E-5		0.20E-3	<0.01E-4	
Hydrofluorination off-gas	<0.1	<0.01E-2	<0.01E-2	<0.01E-2	<0.01E-4	<0.01E-5		<0.01E-3	<0.01E-4	
Building ventilation	43.8	1.46E-2	0.73E-2	0.73E-2	0.62E-4	<0.01E-5		0.31E-3	<0.01E-4	
UF_6 hydrolysis products										
Fluorination	91.2	3.04E-2	0.05E-2	0.05E-2	0.04E-4	<0.01E-5		0.02E-3	<0.01E-4	
Ash degassing and UF_6 sampling	20.0	0.67E-2	-	-	-	-		-	-	
Ash dust										
Before decay										
Materials handling	0.8	0.02E-2	0.66E-2	0.66E-2	0.56E-4	<0.01E-5		0.28E-3	<0.01E-4	
Building ventilation	0.3	0.01E-2	0.26E-2	0.26E-2	0.22E-4	<0.01E-5		0.11E-3	<0.01E-4	
After decay										
Materials handling	2.4	0.08E-2	0.08E-2	0.08E-2	1.71E-4	0.01E-5		0.86E-3	0.01E-4	
Building ventilation	1.0	0.03E-2	0.03E-2	0.03E-2	0.68E-4	<0.01E-5		0.35E-3	<0.01E-4	
Radon gas	-	-	-	-	-	-	2.4E+1[f]	-	-	1.8E+2[f]
Total	435.9	14.52E-2	8.72E-2	8.72E-2	9.64E-4	2.79E-5	2.4E+1[f]	4.87E-3	2.19E-4	1.8E+2[f]

[a]One curie of natural uranium is defined as the sum of 3.7×10^{10} dis/sec from ^{238}U, 3.7×10^{10} dis/sec from ^{234}U, and 9×10^{8} dis/sec from ^{235}U; it is also equivalent to 3000 kg of natural uranium.

[b]Metastable ^{234m}Pa, $t_{1/2}$ = 1.18 min.

[c]Plant feed contains 2800 pCi of ^{230}Th and 200 pCi of ^{226}Ra per gram of U_{nat}.

[d]Plant feed contains 14,200 pCi of ^{230}Th and 1600 pCi of ^{226}Ra per gram of U_{nat}.

[e]As gas. Does not include ^{222}Rn generated in dust particles by decay of ^{226}Ra.

[f]Radon gas release from UF_6 plant processes plus the radon emanation from 1.33E+4 m^2 (3.3 acres) of wet radwaste sludges which are impounded in a lined pit near the plant. Pit capacity: 30-year waste accumulation.

Table 4.6b. Airborne radwaste releases from the model 10,000-metric ton/yr SX-F UF_6 plant -- Case 2

Type of release	U (kg/yr)	Principal radionuclides (Ci/yr)								
					"Low-impurity" feed option[c]			"High-impurity" feed option[d]		
		U_{nat}[a]	^{234}Th	^{234m}Pa[b]	^{230}Th	^{226}Ra	^{222}Rn[e]	^{230}Th	^{226}Ra	^{222}Rn[e]
Crude yellow cake dusts										
Materials handling	13.9	0.46E-2	0.46E-2	0.46E-2	0.39E-4	0.28E-5		0.20E-3	2.17E-5	
Building ventilation	39.6	1.32E-2	1.32E-2	1.32E-2	1.11E-4	0.79E-5		0.56E-3	6.21E-5	
Refined UO_3, UO_2, UF_4										
Materials handling	15.3	0.51E-2	0.26E-2	0.26E-2	0.22E-4	<0.01E-5		0.11E-3	0.01E-5	
Reduction off-gas	0.3	0.01E-2	<0.01E-2	<0.01E-2	<0.01E-4	<0.01E-5		<0.01E-3	<0.02E-5	
Hydrofluorination off-gas	<0.1	<0.01E-2	<0.01E-2	<0.01E-2	<0.01E-4	<0.01E-5		<0.01E-3	<0.02E-5	
Building ventilation	43.8	1.46E-2	0.73E-2	0.73E-2	0.62E-4	<0.01E-5		0.31E-3	0.07E-5	
UF_6 hydrolysis products										
Fluorination	0.9	0.03E-2	0.02E-2	0.02E-2	0.02E-4	<0.01E-5		0.01E-3	<0.01E-5	
Ash degassing and UF_6 sampling	20.0	0.67E-2	-	-	-	-		-	-	
Ash dust										
Before decay										
Materials handling	0.1	<0.01E-2	0.09E-2	0.09E-2	0.08E-4	<0.01E-5		0.04E-3	<0.01E-5	
Building ventilation	0.3	0.01E-2	0.26E-2	0.26E-2	0.22E-4	<0.01E-5		0.11E-3	0.01E-5	
After decay										
Materials handling	0.3	0.01E-2	0.01E-2	0.01E-2	0.24E-4	<0.01E-5		0.12E-3	0.01E-5	
Building ventilation	1.0	0.03E-2	0.03E-2	0.03E-2	0.68E-4	<0.01E-5		0.35E-3	0.04E-5	
Radon gas							3.1E+2[f,g] 2.4E+1[f,h]			2.4E+3[f,g] 1.9E+3[f,h]
Total	135.6	4.51E-2	3.18E-2	3.18E-2	3.58E-4	1.07E-5	3.1E+2[f,g] 2.4E+1[f,h]	1.81E-3	8.52E-5	2.4E+3[f,g] 1.9E+3[f,h]

[a]One curie of natural uranium is defined as the sum of 3.7×10^{10} dis/sec from ^{238}U, 3.7×10^{10} dis/sec from ^{234}U, and 9×10^{8} dis/sec from ^{235}U; it is also equivalent to 3000 kg of natural uranium.

[b]Metastable ^{234m}Pa, $t_{1/2}$ = 1.18 min.

[c]Plant feed contains 2800 pCi of ^{230}Th and 200 pCi of ^{226}Ra per gram of U_{nat}.

[d]Plant feed contains 14,200 pCi of ^{230}Th and 1600 pCi of ^{226}Ra per gram of U_{nat}.

[e]As gas. Does not include ^{222}Rn generated in dust particles by decay of ^{226}Ra.

[f]Radon gas release from UF_6 plant processes plus radon emanation from a 15-year accumulation of liquid and solid radwaste in lined lagoons near the UF_6 plant; without $BaCO_3$ treatment.

[g]Midwestern site; wet radwaste sludges cover an area of 2.88E+4 m^2 (7.2 acres).

[h]New Mexico site; wet radwaste sludges cover an area of 1.09E+4 m^2 (2.7 acres).

Table 4.6c. Airborne radwaste releases from the model 10,000-metric ton/yr SX-F UF_6 plant -- Case 3

Type of release	U (kg/yr)	Principal radionuclides (Ci/yr)								
					"Low-impurity" feed option[c]			"High-impurity" feed option[d]		
		U_{nat}[a]	^{234}Th	^{234m}Pa[b]	^{230}Th	^{226}Ra	^{222}Rn[e]	^{230}Th	^{226}Ra	^{222}Rn[e]
Crude yellow cake dusts										
Materials handling	20.4	6.80E-3	6.80E-3	6.80E-3	5.71E-5	4.08E-6		2.89E-4	3.19E-5	
Building ventilation	4.1	1.36E-3	1.36E-3	1.36E-3	1.14E-5	0.82E-6		0.58E-4	0.64E-5	
Refined UO_3, UO_2, UF_4										
Materials handling	15.3	5.11E-3	2.55E-3	2.55E-3	2.15E-5	0.02E-6		1.09E-4	0.01E-5	
Reduction off-gas	0.3	0.09E-3	0.05E-3	0.05E-3	0.04E-5	<0.01E-6		0.02E-4	<0.01E-5	
Hydrofluorination off-gas	<0.1	<0.03E-3	<0.02E-3	<0.02E-3	<0.01E-5	<0.01E-6		<0.01E-4	<0.01E-5	
Building ventilation	3.1	1.02E-3	0.51E-3	0.51E-3	0.43E-5	<0.01E-6		0.22E-4	<0.01E-5	
UF_6 hydrolysis products										
Fluorination	0.9	0.30E-3	0.24E-3	0.24E-3	0.20E-5	<0.01E-6		0.10E-4	<0.01E-5	
Ash degassing and UF_6 sampling	0.2	0.07E-3	-	-	-	-		-	-	
Ash dust										
Before decay										
Materials handling	0.1	<0.01E-3	0.92E-3	0.92E-3	0.78E-5	<0.01E-6		0.40E-4	<0.01E-5	
Building ventilation	<0.1	<0.01E-3	0.18E-3	0.18E-3	0.16E-5	<0.01E-6		0.08E-4	<0.01E-5	
After decay										
Materials handling	0.3	0.11E-3	0.11E-3	0.11E-3	2.39E-5	0.02E-6		1.21E-4	0.01E-5	
Building ventilation	0.1	0.02E-3	0.02E-3	0.02E-3	0.48E-5	<0.01E-6		0.24E-4	<0.01E-5	
Process subtotal	44.8	14.88E-3	12.74E-3	12.74E-3	13.48E-5	4.94E-6		6.83E-4	3.85E-5	
Radwaste dust										
Dryer off-gas and drumming	<0.1	<0.01E-3	6.83E-3	6.83E-3	11.5E-5	8.20E-6		5.81E-4	6.42E-5	
Building ventilation	<0.1	<0.01E-3	1.35E-3	1.35E-3	2.27E-5	1.62E-6		1.15E-4	1.27E-5	
Waste subtotal	<0.1	<0.01E-3	8.18E-3	8.18E-3	13.77E-5	9.82E-6		6.96E-4	7.69E-5	
Radon gas							6.3E00[f]			4.9E+1[f]
Total	44.9	14.88E-3	20.92E-3	20.92E-3	27.25E-5	14.76E-6	6.3E00[f]	13.79E-4	11.54E-5	4.9E+1[f]

[a]One curie of natural uranium is defined as the sum of 3.7×10^{10} dis/sec from ^{238}U, 3.7×10^{10} dis/sec from ^{234}U, and 9×10^{8} dis/sec from ^{235}U; it is also equivalent to 3000 kg of natural uranium.

[b]Metastable ^{234m}Pa, $t_{1/2}$ = 1.18 min.

[c]Plant feed contains 2800 pCi of ^{230}Th and 200 pCi of ^{226}Ra per gram of U_{nat}.

[d]Plant feed contains 14,200 pCi of ^{230}Th and 1600 pCi of ^{226}Ra per gram of U_{nat}.

[e]As gas. Does not include ^{222}Rn generated in dust particles by decay of ^{226}Ra.

[f]Radon release from the UF_6 plant processes. Radwaste shipped off-site.

Table 4.6d. Airborne radwaste releases from the model 10,000-metric ton/yr SX-F UF_6 plant -- Case 4

Type of release	U (kg/yr)	Principal radionuclides (Ci/yr)								
					"Low-impurity" feed option[c]			"High-impurity" feed option[d]		
		U_{nat}[a]	^{234}Th	^{234m}Pa[b]	^{230}Th	^{226}Ra	^{222}Rn[e]	^{230}Th	^{226}Ra	^{222}Rn[e]
Crude yellow cake dusts										
Materials handling	0.69E-2	0.23E-5	0.23E-5	0.23E-5	0.19E-7	0.14E-8		0.98E-7	1.09E-8	
Building ventilation	3.96E-2	1.32E-5	1.32E-5	1.32E-5	1.11E-7	0.79E-8		5.61E-7	6.21E-8	
Refined UO_3, UO_2, UF_4										
Materials handling	0.76E-2	0.26E-5	0.13E-5	0.13E-5	0.11E-7	<0.01E-8		0.54E-7	0.01E-8	
Reduction off-gas	0.01E-2	<0.01E-5	<0.01E-5	<0.01E-5	<0.01E-7	<0.01E-8		0.01E-7	<0.01E-8	
Hydrofluorination off-gas	<0.01E-2	<0.01E-5	<0.01E-5	<0.01E-5	<0.01E-7	<0.01E-8		<0.01E-7	<0.01E-8	
Building ventilation	4.38E-2	1.46E-5	0.73E-5	0.73E-5	0.62E-7	<0.01E-8		3.10E-7	0.07E-8	
UF_6 hydrolysis products										
Fluorination	0.05E-2	0.02E-5	0.01E-5	0.01E-5	0.01E-7	<0.01E-8		0.05E-7	<0.01E-8	
Ash degassing and UF_6 sampling	0.01E-2	0.01E-5	-	-	-	-		-	-	
Ash dust										
Before decay										
Materials handling	<0.01E-2	<0.01E-5	0.04E-5	0.04E-5	0.04E-7	<0.01E-8		0.20E-7	<0.01E-8	
Building ventilation	0.03E-2	<0.01E-5	0.26E-5	0.26E-5	0.22E-7	<0.01E-8		1.13E-7	0.01E-8	
After decay										
Materials handling	0.02E-2	0.01E-5	0.01E-5	0.01E-5	0.12E-7	<0.01E-8		0.60E-7	0.01E-8	
Building ventilation	0.10E-2	0.03E-5	0.03E-5	0.03E-5	0.68E-7	<0.01E-8		3.46E-7	0.04E-8	
Process subtotal	10.0E-2	3.33E-5	2.76E-5	2.76E-5	3.10E-7	0.93E-8		15.68E-7	7.44E-8	
Chemwaste dust										
Materials handling	<0.01E-2	<0.01E-5	0.41E-5	0.41E-5	0.69E-7	0.50E-8		3.52E-7	3.88E-8	
Building ventilation	<0.01E-2	<0.01E-5	<0.01E-5	<0.01E-5	<0.01E-7	<0.01E-8		<0.01E-7	<0.01E-8	
Waste subtotal	<0.01E-2	<0.01E-5	0.41E-5	0.41E-5	0.69E-7	0.50E-8		3.52E-7	3.88E-8	
Radon gas							5.8E00[f]			4.5E+1[f]
Total	10.0E-2	3.33E-5	3.17E-5	3.17E-5	3.79E-7	1.43E-8	5.8E00[f]	19.2E-7	11.3E-8	4.5E+1[f]

[a]One curie of natural uranium is defined as the sum of 3.7×10^{10} dis/sec from ^{238}U, 3.7×10^{10} dis/sec from ^{234}U, and 9×10^{8} dis/sec from ^{235}U; it is also equivalent to 3000 kg of natural uranium.

[b]Metastable ^{234m}Pa, $t_{1/2}$ = 1.18 min.

[c]Plant feed contains 2800 pCi of ^{230}Th and 200 pCi of ^{226}Ra per gram of U_{nat}.

[d]Plant feed contains 14,200 pCi of ^{230}Th and 1600 pCi of ^{226}Ra per gram of U_{nat}.

[e]As gas. Does not include ^{222}Rn generated in dust particles by decay of ^{226}Ra.

[f]Radon release from the UF_6 plant processes. Radwaste shipped off-site.

Table 4.7. Airborne chemwaste releases from the model 10,000-metric ton/yr SX-F UF_6 plant

Source	Principal chemicals (kg/day)[a]				
	HF	Hexane	NO_2	SO_2	NH_3
Case 1					
Denitration and dissolution (NO_x absorber)			2.6E+2		
Solvent extraction		4.4E+2			
Reduction				2.7E+1	
Hydrofluorination	8.4E00				
Fluorination	5.3E00				
Fluorine cells	1.0E+1				
Total	2.4E+1	4.4E+2	2.6E+2	2.7E+1	
Case 2					
Denitration and dissolution (NO_x absorber)			2.6E+2		
Solvent extraction		4.4E+2			
Reduction				2.7E+1	
Hydrofluorination	1.7E-1				
Fluorination	5.3E-2				
Fluorine cells	2.0E-1				
Waste impoundment					4.6E+2
Total	4.2E-1	4.4E+2	2.6E+2	2.7E+1	4.6E+2
Case 3					
Yellow cake feed calciner					6.8E+2
Denitration and dissolution (NO_x absorber)			2.6E+2		
Solvent extraction		4.4E+2			
Reduction				2.7E+1	
Hydrofluorination	1.7E-1				
Fluorination	5.3E-2				
Fluorine cells	2.0E-1				
Biomass and lime incinerator			6.1E+2		
Total	4.2E-1	4.4E+2	8.7E+2	2.7E+1	6.8E+2
Case 4					
Denitration and dissolution (NO_x absorber)			2.6E+2		
Solvent extraction		4.4E+2			
Reduction				2.7E+1	
Hydrofluorination	1.7E-1				
Fluorination	3.1E-2				
Fluorine cells	8.9E-2				
Waste calciner (NO_x absorber)			3.2E+2		
Total	2.9E-1	4.4E+2	5.8E+2	2.7E+1	

[a]Process releases only -- in addition, there will be combustion products from heating fuels and vehicle exhausts.

Table 4.8. Airborne radwaste treatment systems for the model SX-F UF_6 plant[a]

(Efficiencies given in parentheses)

Source	Principal contaminant removed	Case 1, base plant	Case 2	Case 3	Case 4
Sampling plant	Particulates	Bag filter (99.9%)[b]	Case 1 plus secondary bag filter (86%)[c]	Same as Case 2	Case 2 plus HEPA filter (99.95%)[d,e]
Oxide handling	Particulates	Bag filter (99.9%)[b]	Case 1 plus secondary bag filter (86%)[c]	Same as Case 2	Case 2 plus HEPA filter (99.95%)[d,e]
Denitration	HNO_3	Baffle scrubber - condenser (60% of nitrate values)[f]	Same as Case 1	Same as Case 1	Same as Case 1
	NO_x	NO_x absorption tower (95%)[g]	Same as Case 1	Same as Case 1	Same as Case 1
Reduction	Particulates	Primary 10-μ sintered stainless steel filter; secondary 10-μ sintered stainless steel filter	Case 1 plus water, high-energy venturi scrubber (particulates, 99.0%[h]; SO_2, <1%[i]), demister	Same as Case 1	Case 2 plus HEPA filter (99.95%)[d,e]
	H_2S, S	Flame arrester, H_2 burner	Same as Case 1	Same as Case 1	Same as Case 1
Hydrofluorination	Particulates	Primary porous carbon filter; secondary porous carbon filter	Same as Case 1	Same as Case 1	Case 1 plus HF-resistant HEPA filter (99.95%)[j] after HF removal
	HF	Water-cooled HF condenser (HF, 90%[k]; particulates, 90%[l]); water, high-energy venturi scrubber (HF, 95%,[m] particulates, 50%[l]); demister	Water-cooled HF condenser (HF, 90%[k]; particulates, 90%[l]); water, medium-energy venturi scrubber (HF, 90%; particulates, 50%[l]); KOH packed tower (HF, 99%[n,o]; particulates, 0%)	Same as Case 2	Water-cooled and brine-cooled HF condensers (HF, 99% for system[k]; particulates, 90%[l]); KOH packed tower (HF, 99%[n,o]; particulates, 50%[l])
Fluorination	Particulates	Primary 10-μ sintered nickel filters, secondary 10-μ sintered nickel filters	Same as Case 1	Same as Case 1	Case 1 plus HF-resistant HEPA filter (99.95%)[j] after UF_6, F_2, and HF removal
	UF_6 product	Cold traps, -20°C and -50°C (effluent is 0.08 vol % UF_6[p]; particulates, 95%[l])	Same as Case 1	Same as Case 1	Same as Case 1
	UF_6, F_2, HF	Condenser, -18° to -27°C on F_2 cells to remove HF impurity in feed to system (27%)[q]; KOH high-energy venturi scrubber (HF, 99%[r]; particulates, 80%[l]); demister	Case 1 plus KOH packed tower (HF, 99%[n,o]; particulates, 50%[l])	Same as Case 2	Fluorination process change - less F_2 and HF to treat (20%[s]); -84°C condenser on F_2 cells to reduce HF impurity in F_2 fed to system (65%)[t]; UF_6 cleanup reactor followed by filters (effluent contains 20 ppm U[u]); KOH venturi scrubber (HF, 99%[r]); KOH packed tower (HF, 99%[n,o]); wet scrubbing system (particulates, 90%[l])
Ash degassing and UF_6 sampling	UF_6	None (vented through UF_4 vacuum cleaner system)	None	KOH high-energy venturi scrubber and demister (99%)[r]	Case 3 plus HF-resistant HEPA filter (99.95%)[j]
F_2 cells H_2 off-gas	HF	Condenser, -18° to -27° (27%[v]); flame arrester; H_2 burner; water, high-energy venturi scrubber-condenser and demister (95%[m])	Condenser, -18° to -27°C (27%[v]); flame arrester; H_2 burner; water, medium-energy venturi scrubber-condenser (90%); KOH packed tower (99%[n,o])	Same as Case 2	Fluorination process change - less HF to treat (20%[s]); condenser, -84°C (65%)[t]; water, medium-energy venturi scrubber-condenser (90%); KOH packed tower (99%[n,o])
Building ventilation effluent	Particulates	None	None	Baffle (orifice) water scrubber (93%[b])	Bag filter (99.9%[b])
Radwaste drying and packaging (Case 3 only)	Particulates	Not applicable	Not applicable	Primary and secondary bag filters (99.986%[c])	Not applicable

[a]Bag filter refers to pulse-jet type.

[b]Assumes that uranium dusts behave as typical industrial dusts; efficiency given by C. J. Stairmand, "Removal of Dust from Gases," pp. 398-99 in Processes for Air Pollution Control, ed. by G. Nonhebel, Chemical Rubber Co., Cleveland, Ohio, 1972.

[c]Assumes that under industrial conditions a system of a primary bag filter backed by a second bag filter will achieve the efficiency of a single unit operation under optimum conditions (i.e., no leaky seals or holes in the bag) of 99.986% reported by K. J. Caplan and M. G. Mason, "Efficiency of Reverse-Jet Filters on Uranium Refining Operations," pp. 77-85 in Air Cleaning Seminar, Ames Laboratory, September 15-17, 1952, WASH-149 (March 1954). The second bag filter collects any dust which leaks through the first one; this ordinarily amounts to relatively little material.

[d]C. A. Burchsted and A. B. Fuller, Design, Construction and Testing of High Efficiency Air Filtration Systems for Nuclear Application, ORNL-NSIC-65 (January 1970), p. 3.1.

[e]Tested periodically with dioctyl phthalate.

[f]Conservative; slightly less than the 2/3 reported in Kerr-McGee Corporation, Applicants Environmental Report Sequoyah Uranium Hexafluoride Production Plant, DOCKET 40-8027 (June 1972), p. 48.

[g]B. J. Mayland and R. C. Heinze, Chem. Eng. Progr. 69(5), 75-76 (May 1973).

[h]Particulates passing the 10-μ sintered metal filters were assumed to have an average particle size of 2 μ; efficiency of wet scrubbers on 2-μ particles was obtained from C. J. Stairmand, "Processes for Air Pollution Control," p. 365 in Processes for Air Pollution Control, ed. by G. Nonhebel, Chemical Rubber Co., Cleveland, Ohio, 1972, and C. J. Stairmand, The Chemical Engineer 194, CE 315 (December 1965).

[i]Assumptions discussed in Sect. 4.4.6.2.

[j]Technology not fully developed [W. L. Belvin, M. A. Krimmel, H. C. Schwalbe, and E. N. Gleaton, Summary Report on Development of New Fluoride Resistant HEPA Filter Medium, TID-26649, HERTY Foundation, Savannah, Georgia (in preparation)]. Assumes that ultimately HF-resistant HEPA filters with efficiencies comparable to regular HEPA filters will become available.

[k]W. H. Pechin, R. E. Blanco, R. C. Dahlman, B. C. Finney, R. B. Lindauer, and J. P. Witherspoon, Correlation of Radioactive Waste Treatment Costs and the Environmental Impact of Waste Effluents in the Nuclear Fuel Cycle for Use in Establishing "As Low As Practicable" Guides - Fabrication of Light-Water Reactor Fuel from Enriched Uranium Dioxide, ORNL-TM-4902 (May 1975), p. 38.

[l]Engineering estimate.

[m]L. S. Harris, Chem. Eng. Progr. 62(4), 55-59 (1966).

[n]R. Yates (Health Physicist, Allied Chemical Corporation Metropolis Plant), personal communications to M. B. Sears, Nov. 13, 1974, and Dec. 10, 1974.

[o]By analogy to HCl scrubbing [S. K. Kempner, E. N. Seiler, and D. H. Bowman, J. Air Pollut. Control Assoc. 20(3), 139-43 (1970)].

[p]S. H. Smiley, "Gas-Solids Reactors in Uranium Processing: A Critical Review," p. 260 in Progress in Nuclear Energy Series, IV, Technology, Engineering, and Safety, Vol. 4, ed. by C. M. Nicholls, Pergamon, New York, 1961.

[q]Calculated by assuming as-produced F_2 has the composition given by A. P. Huber, J. Dykstra, and B. H. Thompson, "Multi-ton Production of Fluorine for Manufacture of Uranium Hexafluoride," Paper P/524, Proc. U.N. Intern. Conf. Peaceful Uses At. Energy, 2nd, Geneva, 1958, 4, 172-80 (1958), and that the F_2 feed to the model plant has the composition reported by C. A. Powell, "Current Manufacturing Processes Used in the United States for Mass Production of UF_6 from Purified UO_3," Paper P/1840, Proc. U. N. Intern. Conf. Peaceful Uses At. Energy, 2nd, Geneva, 1958, 4, 165-71 (1958).

[r]By analogy to caustic scrubbing of Cl_2 [L. S. Harris, Chem. Eng. Progr. 62(4), 55-59 (1966)].

[s]Assumptions discussed in Sect. 4.4.8.3.

[t]Efficiency is calculated from paper by Huber et al. (see footnote q).

[u]Efficiency as reported by J. L. Powell, W. R. Foreshee, and S. Bernstein, Ind. Eng. Chem. 51, 919-20 (1959).

[v]By analogy to the efficiency of the condenser on the F_2 stream (see footnote q).

Table 4.9. Liquid radwaste releases from the model 10,000-metric ton/yr SX-F UF_6 plant[a,b]

Source	Liquid flow (ℓ/day)	Principal radionuclides (Ci/yr)					
		U_{nat}[e]	^{234}Th, ^{234m}Pa,[f] each	"Low-impurity" feed option[c]		"High-impurity" feed option[d]	
				^{230}Th	^{226}Ra	^{230}Th	^{226}Ra
Maximum permissible concentration, μCi/ml 10 CFR 20, Table II, General population		2 E-5	2 E-5	2 E-6	3 E-8	2 E-6	3 E-8
Case 1							
Solvent extraction	1.72E+5	5.17E-2	2.29E-1[g]	2.80E-2	2.00E-3	1.42E-1	3.12E-3
Hydrofluorination water scrubber	0.16E+5	<0.01E-2	<0.01E-1	<0.01E-2	<0.01E-3	<0.01E-1	<0.01E-1
Fluorine cell water scrubber	0.54E+5	-	-	-	-	-	-
Fluorination KOH scrubber	0.19E+5	2.69E-2	<0.01E-1	<0.01E-2	<0.01E-3	<0.01E-1	<0.01E-3
Total	2.62E+5	7.86E-2	2.29E-1[g]	2.80E-2	2.00E-3	1.42E-1	3.12E-3
Avg μCi/ml (before dilution)		1.0 E-6	2.9 E-6	3.5 E-7	2.5 E-8	1.8 E-6	3.9 E-8
Case 2							
Solvent extraction			(Waste impounded)				
Hydrofluorination water scrubber	1.64E+4	3.33E-6	1.92E-6[h]	1.40E-8	1.00E-11	7.09E-8	7.83E-11
Fluorine cell water scrubber	5.45E+4	-	-	-	-	-	-
KOH bleed with moist fluorination CaF_2 filter cake	4.54E+2	0.45E-6	0.26E-6[h]	1.81E-8	1.30E-11	9.18E-8	1.01E-10
Total	7.14E+4	3.78E-6	2.18E-6[h]	3.21E-8	2.30E-11	1.63E-7	1.79E-10
Avg. μCi/ml (before dilution)		1.8 E-10	1.0 E-10	1.5 E-12	1.1 E-15	7.6 E-12	8.4 E-15
Case 3							
Solvent extraction	1.76E+5	5.28E-2	8.35E-1[i]	2.80E-2	2.00E-3	1.42E-1	3.12E-3
Fluoride scrubbers (same as Case 2)	0.55E+5	0.45E-6	0.26E-6[h]	1.81E-8	1.30E-11	9.18E-8	1.01E-10
Total	2.31E+5	5.28E-2	8.35E-1[i]	2.80E-2	2.00E-3	1.42E-1	3.12E-3
Avg. μCi/ml (before dilution)		7.6 E-7	1.2 E-5	4.0 E-7	2.9 E-8	2.0 E-6	4.5 E-8
Case 4							
Solvent extraction			(HNO_3 recovered and water recycled)				
Fluorine cell water scrubber	5.45E+4	-	-	-	-	-	-

[a]Assumes that 50% of the thorium and 0.5% of the radium in the primary solvent extraction feed are extracted by TBP with the uranium and are separated from it during fluorination. The ash is stored 6 months to permit decay of ^{234}Th and associated ^{234m}Pa before recycle. Recycled ^{230}Th is rejected to the solvent extraction waste.

[b]In addition, 25 wt % hydrofluoric acid is released for industrial use (Table 4.21). Environmental effects from this acid will depend on its end use, but the radiological effects are expected to be low because the acid contains only small amounts of radioactive materials.

[c]Plant feed contains 2800 pCi of ^{230}Th and 200 pCi of ^{226}Ra per g of U_{nat}.

[d]Plant feed contains 14,200 pCi of ^{230}Th and 1600 pCi of ^{226}Ra per g of U_{nat}.

[e]One curie of natural uranium is defined as the sum of 3.7×10^{10} dis/sec from ^{238}U, 3.7×10^{10} dis/sec from ^{234}U, and 9×10^{8} dis/sec from ^{235}U; it is also equivalent to 3000 kg of natural uranium.

[f]Metastable ^{234}Pa, $t_{1/2}$ = 1.18 min.

[g]Holdup time in waste treatment of 74 days. About 90% of the ^{234}Th and ^{234m}Pa in the waste has decayed.

[h]Holdup time of 30 days. ^{234}Th and ^{234m}Pa have grown back to 60% of secular equilibrium.

[i]Holdup time in waste treatment of 24 days. About 50% of the ^{234}Th and ^{234m}Pa in the waste has decayed.

Table 4.10. Liquid chemwaste releases from the model 10,000-metric ton/yr SX-F UF_6 plant

Source	Liquid flow (ℓ/day)	Principal chemicals (kg/day)							
		Nitrate, NO_3^-	Fluoride, F^-	Sulfate, SO_4^{2-}	Ammonium, NH_4^+	Calcium, Ca^{2+}	Sodium, Na^+	Potassium, K^+	Bicarbonate, HCO_3^-
Case 1									
Solvent extraction	1.72E+5	1.41E+4	-	2.4E+2	1.12E+3	1.96E+3	1.04E+3	0.10E+3	-
Fluoride scrubbers	0.90E+5	-	2.7E+1	-	-	-	-	1.31E+3	-
Total	2.62E+5	1.41E+4	2.7E+1	2.4E+2	1.12E+3	1.96E+3	1.04E+3	1.41E+3	-
Case 2									
Solvent extraction				(Waste impounded)[a]					
Hydrofluorination water scrubber	1.64E+4	-	0.4E00	-	-	0.4E00	-	-	-
Fluorine cell water scrubber	5.45E+4	-	1.4E00	-	-	1.4E00	-	-	-
KOH bleed stream with moist CaF_2 filter cake	4.45E+2	-	<0.1E00	5.0E+1	-	<0.1E00	-	3.2E+1	-
Total	7.13E+4	-	1.8E00	5.0E+1	-	1.9E00	-	3.2E+1	-
Case 3									
Solvent extraction	1.76E+5	7.8E00	-	2.4E+2	4.5E-1	-	1.04E+3	9.7E+1	2.64E+3
Fluoride scrubbers (same as Case 2)	0.71E+5	-	1.8E00	5.0E+1	-	1.9E00	-	3.2E+1	-
Total	2.47E+5	7.8E00	1.8E00	2.9E+2	4.5E-1	1.9E00	1.04E+3	12.9E+1	2.64E+3
Case 4									
Solvent extraction (Rectifier overheads)	1.47E+4	3.0E00	-	-	-	-	-	-	-
Fluorine cell water scrubber	5.45E+4	-	1.4E00	-	-	1.4E00	-	-	-
Total	6.92E+4	3.0E00	1.4E00	-	-	1.4E00	-	-	-

[a]In Case 2 there is a potential for accidental releases of NH_4NO_3 via dike failure or seepage if the integrity of the liner should fail.

Table 4.11. Solid chemwaste-radwaste generated by the model 10,000-metric ton/yr SX-F UF_6 plant for "low-impurity"[a] and ("high-impurity")[b] feed options[c,d,e]

Source	Quantity (metric tons/yr)	Principal radionuclides: Total (Ci/yr)				Principal radionuclides: Average concentration (μCi/g)			
		U_{nat}[f]	^{234}Th, ^{234m}Pa[g] each	^{230}Th	^{226}Ra, ^{222}Rn, ^{218}Po, ^{214}Pb, ^{214}Bi, ^{214}Po, each	U_{nat}[f]	^{234}Th, ^{234m}Pa,[g] each	^{230}Th	^{226}Ra, ^{222}Rn, ^{218}Po, ^{214}Pb, ^{214}Bi ^{214}Po, each
Avg. composition of earth's crust[h]						1 E-6	1 E-6	1 E-6	1 E-6
Case 1									
Radwaste: sludges from treating SX raffinate, stored in radwaste settling basin	1190 (1290)	7.3E-1	7.3E-1	2.8E+1 (1.4E+2)	2.0E00 (1.6E+1)	6.1E-4 (5.7E-4)	6.1E-4 (5.7E-4)	2.4E-2 (1.1E-1)	1.7E-3 (1.2E-2)
Chemwaste: CaF_2 from treating scrubber liquors stored in fluoride settling basin	525	9.3E-2	9.3E-2	7.0E-5 (3.6E-4)	4.5E-6 (7.0E-6)	1.8E-4	1.8E-4	1.3E-7 (6.8E-7)	8.5E-9 (1.3E-8)
Case 2									
Radwaste: sludges from treating SX raffinate, stored with nitrate waste in lagoons	430	8.0E-1	8.0E-1	2.8E+1 (1.4E+2)	1.8E00 (1.4E+1)	1.9E-3	1.9E-3	6.5E-2 (3.3E-1)	4.2E-3 (3.3E-2)
Chemwaste: CaF_2 from treating scrubber liquors stored in fluoride settling basin	600	5.7E-2	5.7E-2	8.1E-6 (4.1E-5)	5.8E-9 (4.5E-8)	9.4E-5	9.4E-5	1.3E-8 (6.8E-8)	9.4E-12 (7.5E-11)
Case 3									
Radwaste: solids from treating SX raffinate, dried and drummed for disposal	1150 (1280)	8.0E-1	8.0E-1	2.8E+1 (1.4E+2)	2.0E00 (1.6E+1)	7.0E-4 (6.3E-4)	7.0E-4 (6.3E-4)	2.4E-2 (1.1E-1)	1.7E-3 (1.2E-2)
Chemwaste: CaF_2 from treating scrubber liquors, stored in fluoride settling basin	600	5.7E-2	5.7E-2	8.1E-6 (4.1E-5)	5.8E-9 (4.5E-8)	9.4E-5	9.4E-5	1.3E-8 (6.8E-8)	9.4E-12 (7.5E-11)
Case 4									
Radwaste: solids from neutralizing SX raffinate, cemented and drummed for disposal	4640	8.5E-1	8.5E-1	2.8E+1 (1.4E+2)	2.0E00 (1.6E+1)	1.8E-4	1.8E-4	6.0E-3 (3.0E-2)	4.3E-4 (3.4E-3)
Chemwaste:									
Solids from lime-treating SX raffinate, stored in chemwaste pit	770	2.8E-2	2.8E-2	6.7E-3 (3.4E-2)	4.8E-4 (3.8E-3)	3.6E-5	3.6E-5	8.6E-6 (4.3E-5)	6.1E-7 (4.8E-6)
Soluble salts from treating SX raffinate, dried and drummed for disposal	132	2.3E-5	2.3E-5	5.5E-5 (2.8E-4)	1.4E-5 (1.1E-4)	1.7E-7	1.7E-7	4.2E-7 (2.1E-6)	1.1E-7 (8.3E-7)
CaF_2 from treating KOH scrubber liquors, stored in fluoride pit	122	1.7E-2	1.7E-2	8.1E-6 (4.1E-5)	5.8E-9 (4.5E-8)	1.3E-4	1.3E-4	6.6E-8 (3.4E-7)	4.7E-11 (3.7E-10)
CaF_2 from treating fluorine cells water scrubber liquor, stored in fluoride settling basin	52	-	-	-	-	-	-	-	-

[a]Plant feed contains 2800 pCi of ^{230}Th and 200 pCi of ^{226}Ra per g of U_{nat}.

[b]Plant feed contains 14,200 pCi of ^{230}Th and 1600 pCi of ^{226}Ra per g of U_{nat}.

[c]Only radioactive materials in the yellow cake feed to the plant are considered; possible radioactive impurities in the chemical feed to the plant are not included.

[d]Stored 6 months so that ^{234}Th and ^{234m}Pa are in secular equilibrium with ^{238}U, and radium daughters through ^{214}Po are in secular equilibrium with ^{226}Ra; assumes negligible loss of ^{222}Rn gas during storage.

[e]Assumes that 50% of the thorium and 0.5% of the uranium in the primary solvent extraction feed are extracted by TBP with the uranium and are separated from it during fluorination.

[f]One curie of U_{nat} is defined as the sum of 1 Ci of ^{238}U, 1 Ci of ^{234}U, and 2.43×10^{-2} Ci of ^{235}U; 1 Ci of U_{nat} is also equivalent to 3000 kg of U_{nat}.

[g]Metastable ^{234m}Pa, $t_{1/2}$ = 1.18 min.

[h]Estimated by assuming the presence of 3 ppm uranium in the earth's crust and secular equilibrium.

Table 4.12. Dust-bearing air flows at the model 10,000-metric ton/yr SX-F UF_6 plant

Source	Figure No.	Code	Air flow (scfm)	Air flow (sm^3/min)
Process materials handling				
Sampling				
Process	4.5[a]	1a	10,000	284
Vacuum cleaner system	4.5	1b		
Refining				
Drum dumping	4.5[a]	2a	4,000	113
Drum cleaning	4.5	2b	6,000	170
Feed calciner (Case 3 only)	4.17	2c	5,000	142
Oxide grinding	4.5[a]	2e	500	14.2
Oxide vacuum cleaner system[b]	4.5	2d + 2f	500	14.2
Conversion				
UF_4 handling	4.5[c]	5a	3,000	85
UF_4 vacuum cleaner system[d]	4.5	5b + 6b + 9d	1,000	28
Uranium recycle				
Ash handling[e]	4,5[c]	6a + 9a + 9b	2,000	57
Ash drum dumping	4.5	9c	1,000	28
Waste treatment materials handling				
Radwaste handling (Case 3 only)				
Radwaste dryer	4.5	10a	15,000	424
Radwaste packaging	4.5	10b	3,000	85
Radwaste vacuum cleaner system	4.5	10c	500	14.2
Lime recovery (Case 3 only)				
Lime calciner	4.19	54	1,000	42
Lime handling	4.19	55	4,000	113
Magnesia recovery (Case 4 only)				
Magnesia handling	4.25	65	6,000	170
Chemwaste handling	4.25	64	500	14.2
Building air				
Process cooling fans and personnel protection				
10 fans at 1000 cfm each		12A	10,000	284
2 hoods at 6500 cfm each			13,000	368
Building ventilation effluent				
12 fans at 25,000 cfm each		13A	300,000	8500
2 hoods at 14,000 cfm each			28,000	794

[a]Also shown on Fig. 4.2.

[b]Refinery vacuum cleaner system collects both yellow cake and purified oxide.

[c]Also shown on Fig. 4.3.

[d]Conversion plant vacuum cleaner system collects both UF_4 and ash, which is predominantly UF_4.

[e]Batch operations; one dust collector serves several streams.

Table 4.13. Airborne uranium releases from the model 10,000-metric ton/yr SX-F UF_6 plant[a,b]

(Codes shown in Figs. 4.2-4.6)

	Source	Code	Quantity of U_{nat} released (kg/yr)			
			Case 1 (base plant)	Case 2	Case 3	Case 4
Yellow cake	Sampling	1A	31.4	4.4	4.4	0.22E-2
	Refining					
	Drum dumping	2a	31.4	4.4	4.4	0.22E-2
	Drum cleaning	2b	30.7	4.3	4.3	0.21E-2
	Feed calciner[c]		n.a.	n.a.	6.0	n.a.
	Vacuum cleaner system	2c	5.5	0.8	1.3	0.01E-2
Refined	Oxide grinding[d]	15a	12.0	1.7	1.7	0.01E-2
	Vacuum cleaner system	15b	1.1	0.15	0.15	<0.01E-2
	Reduction	3A	28.3	0.28	0.28	0.01E-2
	Hydrofluorination					
	Process	4A	<0.10	<0.10	<0.10	
	UF_4 handling[e]	5a	51.0	7.1	7.1	0.75E-2
	UF_4 vacuum cleaner system	5b	45.4	6.4	6.4	
UF_6	Fluorination					
	Process[f]	8A	91.2	0.9	0.9	0.05E-2
	Ash degassing		20.0	20.0	0.2	<0.01E-2
	Ash handling and grinding[g]	6A & 9A	3.2	0.45	0.45	0.02E-2
	Waste drying and packaging[g]	10A	n.a.	n.a.	<0.01	<0.02E-2
	Building ventilation[h]	12A & 13A	84.7	84.7	7.3	8.47E-2
	Total		435.9	135.6	44.9	10.0E-2

[a]Estimated by analogy to similar operations at the Allied Chemical Metropolis Plant; see Part I of this study, ORNL/NUREG/TM-7, p. 176.

[b]Treatment efficiencies listed in Table 4.8.

[c]Assumes that 60% of the feed is calcined, and that the amount of airborne dust generated as a percent of throughput is similar to yellow cake drying at a uranium mill.

[d]Quantity of dust generated in oxide grinding as a percent of throughput is assumed to be 10% of the total generated at a typical uranium mill for drying, grinding, plus packaging yellow cake.

[e]Includes estimated UF_4 dust release from solids handling for F_2 (Cases 1 to 4) and UF_6 (Case 4 only) cleanup reactors. Cases 1 to 3 assume that 35% of the UF_4 (Case 4, 50% of the UF_4) passes through the cleanup reactor(s) before the primary fluorinator and that conventional solids handling techniques (screw conveyers, hoppers, etc.) are used.

[f]Fluorination losses were calculated by assuming a gas flow containing 0.08 vol % UF_6 from the UF_6 cold traps and treatment efficiencies as given in Table 4.8.

[g]Assumptions listed in Table 4.14.

[h]Release through untreated building ventilation effluent assumed to be 40% of the process dust control effluent with Case 1 level treatment; advanced cases proportioned on this basis using treatment efficiencies of Table 4.8.

n.a. = not applicable.

Table 4.14. Airborne ash and radwaste dust releases from the model SX-F UF_6 plant

Source	Release (% of ash or waste processed)			
	Case 1	Case 2	Case 3	Case 4
Uranium recycle				
Collecting fluorination ash -- before decay	4.0E-4	5.60E-5	5.60E-5	2.8E-8
Ash dumping to grinder - after decay	3.1E-4	4.34E-5	4.34E-5	2.2E-8
Ash grinding	1.2E-4	1.68E-5	1.68E-5	8.4E-9
Ground ash packaging	4.8E-4	6.72E-5	6.72E-5	3.4E-8
Ash dumping, recycle to process	3.1E-4	4.34E-5	4.34E-5	2.2E-8
Building ventilation effluent				
Before decay	1.6E-4	1.60E-4	1.12E-5	1.6E-7
After decay	4.9E-4	4.90E-4	3.43E-5	4.9E-7
Radwaste handling				
Radwaste drying	Not applicable		3.1E-4	Not applicable
Radwaste packaging			6.7E-5	
Radwaste vacuum cleaner system			3.0E-5	
Building ventilation effluent			8.1E-5	

Table 4.15. Dissolution feed including recycle streams - Cases 1 and 2, for the model 10,000-metric ton/yr SX-F UF_6 plant

(Shown schematically on Fig. 4.2)

Description	Chemicals (kg/day)	Volume (ℓ/day)
Uranium bearing streams		
Yellow cake from mill[a] (Sect. 4.4.5.1)		
U	33,330	
NH_4^+	1,070	
Na^+	560[a]	
CO_3^{2-}	100	
$Na_2U_2O_7$ slurry recycle from solvent treatment (Sect. 4.4.5.6)		
U	700	5,900
Na^+	90	
UF_4 scrap recycle (Sect. 4.4.5.4)		
U	170	
F^-	53	
Acid		
Makeup 60% HNO_3	13,100	16,000
Recycle 40% HNO_3 from scrubber-condenser on denitrator (Sect. 4.4.5.8)	10,640	21,400
Recycle 30% HNO_3 from NO_x absorber (Sect. 4.4.5.8)	6,040	18,800
Chemical additives		
$BaCO_3$ (for radium control in the waste, Sect. 4.4.11)	160[b,c]	
$Al(NO_3)_3$ (for control of corrosion in the misc. dissolver, Sect. 4.4.5.4)	1,790	
KOH scrub liquor (to remove HF from the misc. dissolver off-gas, Sect. 4.4.5.4)	80	

[a]Simplified feed used for estimating solvent extraction flows is 42.5 mole % $(NH_4)_2SO_4$, 42.5 mole % UO_3, and 15 mole % $Na_2U_2O_7$. The only impurity shown is Na_2CO_3, which consumes acid. Other impurities, including other sodium salts, are listed in Table 4.2.

[b]For 99% radium removal; for 99.8% radium removal, add 800 kg/day of $BaCO_3$.

[c]No $BaCO_3$ treatment in Case 2.

Table 4.16. Solvent extraction and solvent treatment flows for the model 10,000-metric ton/yr SX-F UF_6 plant

(Codes shown on Fig. 4.7; discussion, Sect. 4.4.5.5)

Description	Code	Flow rate (ℓ/day)	U (g/ℓ)	Free HNO_3 (M)
Solvent extraction				
Primary aqueous feed	1	6.28E+4	540	1.5
Scrub raffinate	2	1.70E+4	100	1.4
Extraction feed	3	7.98E+4	450	1.5
Organic feed	4	2.69E+5	-	-
* Extraction raffinate (waste)	2R	7.57E+4	0.10	1.26
Extraction product	6	2.80E+5	130	0.1
Scrub water	7	1.70E+4	-	-
Wash product	8	2.80E+5	120	-
Strip water	9	2.65E+5	-	-
Purified uranyl nitrate solution	10	2.69E+5	120	-
Stripped solvent	11	2.69E+5	2.6	-
Solvent treatment				
1.5% $(NH_4)_2SO_4$ wash	12	1.34E+4	-	-
1.1% NaOH wash[a]	13	1.34E+4	-	-
Scrub water	14	2.45E+4	-	-
Recovered uranium	15	5.87E+3	120	-
* Solvent treatment waste	2T	4.54E+4	0.02	-

[a]In Case 4, $Mg(OH)_2$ replaces NaOH.

*Asterisk denotes waste stream.

Table 4.17. Solvent treatment (uranium recovery) material flows[a] for the model 10,000-metric ton/yr SX-F UF_6 plant

(Codes shown on Fig. 4.7; liquid flows in Table 4.16; discussion in Sect. 4.4.5.6)

Code	Description	Chemicals (kg/day)						
		U	NO_3^-	NH_4^+	SO_4^{2-}	Na^+	OH^-	Mg^{2+}
11	Stripped organic from solvent extraction	700	365	-	-	-	-	-
12	1.5% $(NH_4)_2SO_4$ wash	-	-	54	143	-	-	-
13	Caustic wash							
	Cases 1-3, 1.1% NaOH[b]	-	-	-	-	253	187	n.a.
	Case 4, $Mg(OH)_2$ slurry[c]	-	-	-	-	n.a.	300	215
14	Scrub water	-	-	-	-	-	-	-
15	Recovered uranium slurry (recycled to dissolver)							
	Cases 1-3	700	41	6	16	88	4	n.a.
	Case 4	700	41	6	16	n.a.	99	119
2T	* Solvent treatment waste							
	Cases 1-3	0.9	324	48	127	165	33	n.a.
	Case 4	0.9	324	48	127	n.a.	0.2	96

[a]There is uncertainty in these estimates.

[b]25% excess NaOH based on the equation: $2UO_2(NO_3)_2 + 6NaOH \longrightarrow Na_2U_2O_7 + 4NaNO_3 + 3H_2O$.

[c]100% excess $Mg(OH)_2$ based on the equation: $2UO_2(NO_3)_2 + 3Mg(OH)_2 \longrightarrow MgU_2O_7 + 2Mg(NO_3)_2 + 3H_2O$.

n.a. = not applicable.

*Asterisk denotes waste stream.

Table 4.18. Denitration material flows for the model 10,000-metric ton/yr SX-F UF_6 plant - Cases 1-3

(Shown schematically on Fig. 4.2; discussion in Sects. 4.4.5.7 and 4.4.5.8)

Description	Chemicals (kg/day)	Volume (ℓ/day)
Feed		
Purified $UO_2(NO_3)_2$ solution (from solvent extraction)		
U	33,500	~270,000
NO_3^-	17,800	
$(NH_4)_2SO_4$[a] (additive to boildown)	138	
UO_3 product (to conversion to UF_6)	40,300	
Recycle streams		
Deionized water (condensate from concentration and boildown; recycled to solvent extraction)	Trace	~180,000
40% HNO_3 recovered by scrubber-condenser from denitrator off-gas (recycled to dissolution)	10,600	21,400
30% HNO_3 recovered by NO_x absorber (recycled to dissolution)	6,040	18,800
Wastes		
* Surplus weak acid (stream 2S; to waste treatment)	710	42,800
* NO_2 release (stream 2B)	260	

[a]Chemical promoter for subsequent reduction and hydrofluorination steps.

*Asterisk denotes waste stream.

Table 4.19. Reduction waste streams and material flows for the model 10,000-metric ton/yr SX-F UF_6 plant[a]
(Codes shown on Fig. 4.8; discussion in Sect. 4.4.6)

Stream			Case	Gas flow (sm^3/min)					Liquid flow	Flow rate (kg/day)			
Code	Type	Description	study	Total	H_2O	H_2	N_2	O_2	(ℓ/day)	U	H_2S	SO_2 or SO_3^{2-} calc. as SO_2	CO_2 or CO_3^{2-} calc. as CO_2
3	Gaseous	Feed to reduction off-gas waste treatment system	1-4	7.36	2.21	2.21	2.95			9.43E-2	14.4		
3A	Gaseous	Effluent released to atmosphere from reduction	1	14.3	4.42		9.29	0.57		9.43E-2	-	27.1	6.8
			2-4	14.3	4.42		9.29	0.57		9.43E-4	-	27.1	6.8
3B	Gaseous	Air feed to H_2, H_2S burner	1-4	7.99			6.32	1.67					6.8
3C	Gaseous	Feed to venturi scrubber	1	Not applicable									
			2-4	14.3	4.42	-	9.29	0.57		9.43E-2	-	27.1	6.8
3L	Liquid	Waste stream from reduction water scrubber (to digestion)	1						Not applicable				
			2-4						11.4	9.33E-2	-	-	-

[a]Assumptions:
(1) 100% excess H_2 used in reduction.
(2) 50% excess air used to burn H_2 and H_2S.
(3) 3000 ppm SO_4^{2-} per g U added as a chemical promotor during boildown.
(4) Sulfur in reduction off-gas assumed to be H_2S.
(5) Efficiencies of off-gas treatments are listed in Table 4.8.
(6) Scrubbers are recirculating systems and operate hot (~70°C) with no water condensation from the off-gas or evaporation of water into the gas stream.

Table 4.20. Hydrofluorination waste streams and material flows for the model 10,000-metric ton/yr SX-F UF_6 plant[a]
(Codes shown on Figs. 4.10 and 4.11; discussion in Sect. 4.4.7)

Stream						Flow rate (kg/day)			
Code	Type	Description	Case study	Gas flow (sm^3/min)	Liquid flow (ℓ/day)	U	F^-	H^+	H_2O vapor or H_2O condensed from vapor phase
4	Gaseous	Feed to hydrofluorination off-gas waste treatment system	1-4	7.36		8.70E-3	1.60E+3	8.48E+1	5.08E+3
4A	Gaseous	Effluent released to atmosphere from hydrofluorination	1	1.78		<3.33E-4	7.98E00	4.24E-1	9.53E+1
			2,3	1.78		<3.33E-4	1.60E-1	8.48E-3	9.53E+1
			4	1.76		<1.17E-7	1.60E-1	8.48E-3	6.80E+1
4B	Gaseous	Feed to wet scrubbers (i.e., waste stream from aqueous HF condensers)	1-3	2.27		6.99E-4	1.60E+2	8.48E00	5.03E+2
			4	1.76		6.99E-4	1.60E+1	8.48E-1	5.03E+1
4K	Liquid	Waste stream from hydrofluorination KOH scrubbers	1			Not applicable			
			2,3		5.84E+2	nil	1.58E+1	-	nil
			4		5.84E+2	3.33E-4	1.58E+1	-	nil
4L	Liquid	Waste stream from hydrofluorination water scrubbers	1		1.64E+4	3.33E-4	1.52E+2	8.07E00	4.09E+2
			2,3		1.64E+4	3.33E-4	1.44E+2	7.62E00	4.09E+2
			4			Not applicable			
40	Liquid	25% aqueous HF recovered by condensers for use in industry	1-3		5.56E+3	8.00E-3	1.44E+3	7.62E+1	4.54E+3
			4		6.17E+3	8.00E-3	1.58E+3	8.35E+1	4.99E+3

[a]Assumptions:
(1) 15% excess HF used in hydrofluorination.
(2) Efficiencies of off-gas scrubbers and condensers are listed in Table 4.8.
(3) Water scrubbers are single-pass, 3 gpm.
(4) KOH scrubbers are recirculating systems. Initial KOH concentration, 10 wt %; final concentration, 2 wt %.
(5) Scrubbers operate at ~32°C.

[b]sm^3/min of water vapor (product of hydrofluorination reaction), 1.7 sm^3/min of nitrogen (to fluidize the beds), and 1.30 sm^3/min of HF (excess over stoichiometric).

Table 4.21. Radionuclide composition of recovered 25 wt % HF in SX-F Cases 1 - 3[a,b]

Radionuclide	Recovered 25 wt % HF Ci/yr		Recovered 25 wt % HF μCi/ml		10 CFR 20 MPC (μCi/ml)
U_{nat}[c]	8.0E-4		4.8E-7		2E-5[c]
^{234}Th	8.0E-4[d]		4.8E-7[d]		2E-5
^{234}Pa	8.0E-4[d]		4.8E-7[d]		
^{230}Th	3.4E-6[e,f]	(1.7E-5)[g,f]	2.0E-9[e,f]	(1.0E-8)[g,f]	2E-6
^{226}Ra	2.4E-9[e,h]	(1.9E-8)[g,h]	1.4E-12[e,h]	(1.1E-11)[g,h]	3E-8

[a]Assumptions:
(1) 10,000-metric ton/yr model SX-F UF_6 plant.
(2) 15% excess HF to hydrofluorination.
(3) 90% efficient condensers on off-gas.
(4) 90% efficient particulate removal by condensers.

[b]Values represent probable upper limit; estimated from analytical limit of detection for uranium passing the porous carbon filters. Data obtained through the courtesy of the Allied Chemical Corporation.

[c]One curie of natural uranium is defined as the sum of 3.7×10^{10} dis/sec from ^{238}U, 3.7×10^{10} dis/sec from ^{234}U, and 9×10^{8} dis/sec from ^{235}U; it is also equivalent to 3000 kg of natural uranium.

[d]After growth to secular equilibrium with ^{238}U.

[e]"Low-impurity" feed option; i.e., plant feed contains 2800 pCi of ^{230}Th and 200 pCi of ^{226}Ra per g of U_{nat}.

[f]Assumes 50% of the ^{230}Th is extracted with the uranium by TBP.

[g]"High-impurity" feed option; i.e., plant feed contains 14,200 pCi of ^{230}Th and 1600 pCi of ^{226}Ra per g of U_{nat}.

[h]Assumes 0.5% of the ^{226}Ra is extracted with the uranium by TBP.

Table 4.22. Fluorination waste and recycle streams and material flows for the model 10,000-metric ton/yr SX-F UF_6 plant[a] (Codes shown on Figs. 4.3, 4.11, and 4.12; discussion in Sect. 4.4.8)

Code	Type	Description	Case study	Gas flow (sm^3/min) Total	"Inert"	O_2	H_2O vapor	Liquid flow (ℓ/day)	Solid flow (kg/day)	Flow rate (kg/day) U	F	K^+	OH^-	CO_3^-
8	Gaseous	Feed to fluorination off-gas KOH scrubbing system	1-3	2.49	2.18					3.04E+1	5.00E+2			
			4	1.76	1.64					5.35E-1	1.49E+2			
8A	Gaseous	Effluent released to atmosphere from fluorination	1	2.32	2.18	8.51E-2	5.67E-2			3.04E-1	5.00E00			
			2,3	2.32	2.18	8.51E-2	5.67E-2			3.04E-3	5.00E-2			
			4	1.70	1.64	1.13E-2	5.67E-2			5.35E-8	2.98E-2			
8B	Gaseous	CO_2 feed to uranium recovery	1-3	1.1E-2										
			4	2.8E-4										
8K	Liquid	Fluorination KOH waste stream after uranium recovery	1-3					1.89E+4		5.66E-1	5.00E+2	1.31E+3	9.49E+1	4.58E+1
			4					5.53E+3		1.66E-1	1.49E+2	1.14E+2	3.31E+1	8.07E-1
8L	Liquid	Fluorination KOH scrubber liquid before uranium recovery	1-3					1.89E+4		3.04E+1	5.00E+2	1.32E+3	1.14E+2	
			4					5.53E+3		5.35E-1	1.49E+2	1.14E+2	3.35E+1	
8M	Liquid	10% KOH feed to fluorination scrubbers	1-3					1.89E+4				1.32E+3	3.89E+2	
			4					5.53E+3				6.85E+2	2.00E+3	
8Ua	Solid	Fluorination ash (tower ash)	1-4						6.60E+2	5.00E+2	1.60E+2			
8Ub	Solid	Uranium recovered from fluorination scrubber liquor	1-3						4.25E+1	2.98E+1		4.90E00		
			4						5.17E-1	3.68E-1		6.03E-2		
8Uc +8Ud	Solid	Fluorination ash (filter fines)	1-4						2.19E+2	1.66E+2	5.30E+1			
8Ue	Solid	Uranium fluoride solids from F_2 cleanup reactor	1-3						7.90E+3	5.99E+3	1.91E+3			
			4						1.34E+4	1.02E+4	3.25E+3			
8Uf	Solid	Uranium fluoride solids from UF_6 cleanup reactor	1-3						not applicable					
			4						7.24E+1	5.49E+1	1.75E+1			

[a]Assumptions:

(1) Cases 1-3

Feed to fluorination:

Solids are 97% UF_4 and 3% UO_2, the average reported by Brater et al. for single-stage fluid-bed hydrofluorination ["Development and Production Experience with Mechanically Agitated Fluid Beds as Applied to the Hydrofluorination of Fine Uranium Oxide Powders," Chem. Eng. Progr., Symp. Ser. Pt. 15, 62, 1-11 (1966)].

96% F_2 utilization in fluorination; e.g., 60% fluorine utilization in primary tower reactor [i.e., tower feed as reported by Crawford, Fluorination of All Enrichments of Uranium Oxides, GAT-P-43, Goodyear Atomic Corporation (June 24, 1968), p. 4 and middle of range reported by Smiley and Brater, "The Development of a High Capacity, Continuous Process for the Preparation of Uranium Hexafluoride from Uranium Oxides and Ore Concentrates," Paper P/252, Proc. U.N. Intern. Conf. Peaceful Uses At. Energy, 2nd, Geneva, 1958, 4, 160 (1958), assuming no recycle of F_2 to the primary tower] and 90% fluorine utilization in the cleanup tower [e.g., downgraded F_2 removal efficiency of DOE cleanup reactors (Pedigo et al., "Fluidized Bed Recovery of Fluorine in the Manufacture of UF_6," Chem. Eng. Progr., Symp. Ser. Pt. 15, 62, 12-19 (1966) because technology is not in the public domain].

F_2 contains 8 vol % HF and 2 vol % "inert" components [C. A. Powell, "Current Manufacturing Processes Used in the United States for Mass Production of UF_6 from Purified UO_3," Paper P/1840, Proc. U.N. Intern. Conf. Peaceful Uses At. Energy, 2nd Geneva, 1958, 4, 165-71 (1958)].

2.18 sm^3/min of "inert" gas (N_2 to feed solids to tower, seal leakage, oxygen from fluorination of oxide or oxyfluoride impurities), 0.08 vol % UF_6 in effluent from UF_6 cold traps (average reported by Smiley, "Gas-Solid Reactors in Uranium Processing: A Critical Review," pp. 241-62 in Progress in Nuclear Energy, Series IV, Technology, Engineering and Safety, Vol. 4, edited by C. M. Nicholls, Pergamon Press, 1961).

(2) Case 4

Feed to fluorination:

Solids are 97% UF_4 and 3% UO_2

99.5% F_2 utilization in fluorination; e.g., 90% in primary tower reactor (i.e., by recycle of F_2 to the tower or operating cold traps under a negative pressure, Smiley and Brater, Ibid.) and 95% F_2 recovery in the F_2 cleanup reactor (Pedigo et al., Ibid.).

F_2 contains 4 vol % HF and 2 vol % "inert" components [Huber et al., "Multi-ton Production of Fluorine for Manufacture of Uranium Hexafluoride," Paper P/524, Proc. U.N. Intern. Conf. Peaceful Uses At. Energy, 2nd, Geneva, 1958, 4, 172-80 (1958)].

1.64 sm^3/min of "inert" gas

20 ppm of UF_6 in effluent from UF_6 cleanup reactor

(3) Efficiencies of wet scrubbers are listed in Table 4.8.

(4) KOH scrubbers are recirculating systems operating at 25°C. Initial KOH concentration, 10 wt %; final concentration, 2 wt %. Chemistry of scrubbers is described in Sect. 4.4.8.4.

(5) 100% excess CO_2 is added in uranium recovery assuming that all uranium is present as soluble K_4UO_8.

Table 4.23. Fluorine cell waste and recycle streams and material flows for the model 10,000-metric ton/yr SX-F UF_6 plant[a]

(Codes shown in Figs. 4.4 and 4.13)

Stream				Gas flow (sm^3/min)			Liquid flow			H_2O vapor or water condensed from gas phase					
Code	Type	Description	Case study	Total	N_2	O_2	(ℓ/day)	F^-	H^+		CO_2	K^+	OH^-	H_2	F_2
7	Gaseous	Feed to fluorine cell H_2 off-gas scrubbing system	1-3	9.97	6.85	0.60		1.91E+2	1.02E+1	2.78E+3	7.26E00				
			4	9.63	6.63	0.57		8.48E+1	4.51E00	2.68E+3	7.03E00				
7A	Gaseous	Effluent released to atmosphere from fluorine cell H_2 off-gas system	1	7.73	6.85	0.60		9.55E00	5.10E-1	3.84E+2	7.26E00				
			2,3	7.70	6.85	0.60		1.91E-1	1.02E-2	3.84E+2	7.26E-2				
			4	7.48	6.63	0.57		8.48E-2	4.51E-3	3.71E+2	7.03E-4				
7B	Gaseous	Feed to KOH scrubbers on H_2 off-gas	1				Not applicable								
			2,3	7.73	6.85	0.60		1.91E+1	1.02E00	3.84E+2	7.26E00				
			4	7.48	6.63	0.57		8.48E00	4.51E-1	3.71E+2	7.03E00				
7C	Gaseous	H_2 effluent from HF condenser	1-3	2.63	0.06			1.91E+2	1.02E+1					3.10E+2	
			4	2.44	0.06			8.48E+1	4.51E00					3.00E+2	
7D	Gaseous	H_2 feed to HF condenser	1-3	2.66	0.06			2.63E+2	1.40E+1					3.10E+2	
			4	2.58	0.06			2.54E+2	1.35E+1					3.00E+2	
7E	Gaseous	F_2 feed to HF condenser	1-3	4.39	0.06			3.57E+2	1.90E+1						5.85E+3
			4	4.25	0.06			3.45E+2	1.83E+1						5.66E+3
7F	Gaseous	F_2 effluent from HF condenser feed to fluorination	1-3	4.25	0.06			2.61E+2	1.38E+1						5.86E+3
			4	3.96	0.06			1.26E+2	6.71E00						5.66E+3
7G	Gaseous	Air feed to H_2 burner	1-3	8.58	6.80	1.78					7.26E00				
			4	8.30	6.57	1.73					7.00E00				
7K	Liquid	Waste stream from KOH scrubber on H_2 off-gas	1				Not applicable								
			2,3				9.39E+2	1.91E+1		Nil	7.21E00	6.53E+1	5.67E00		
			4				5.34E+1	8.48E00		Nil	7.03E00	3.70E+1	3.23E00		
7L	Liquid	Waste stream from water scrubber-condenser on H_2 off-gas	1				5.45E+4	1.82E+2	9.67E00						
			2,3				5.45E+4	1.72E+2	9.16E00	2.39E+3	-				
							5.45E+4	7.62E+1	4.06E00	2.31E+3	-				
7M	Liquid	10% KOH feed to scrubber on H_2 off-gas	1				Not applicable								
			2,3				9.39E+2					6.53E+1	2.85E+1		
			4				5.34E+1					3.70E+1	1.61E+1		
7O	Liquid	HF recovered from H_2 stream for recycle	1-3					7.21E+1	3.81E00						
			4					1.70E+2	9.03E00						
7P	Liquid	HF recovered from F_2 stream for recycle	1-3					9.66E+1	5.13E00						
			4					2.19E+2	1.16E+1						

[a]Assumptions:

(1) As-produced H_2 (i.e., Stream 7D) contains 9 vol % HF and 2 vol % "inert" components; as-produced fluorine (i.e., Stream 7E) contains 11 vol % HF and 2 vol % "inert" components [A. P. Huber, J. Dykstra, and B. H. Thompson, "Multi-ton Production of Fluorine for Manufacture of Uranium Hexafluoride," Paper P/524, Proc. U.N. Intern. Conf. Peaceful Uses At. Energy, 2nd Geneva, 1958, 4, 172-80 (1958)].

(2) Fluorine utilization is 96% in Cases 1-3, 99.5% in Case 4.

(3) Efficiencies of off-gas scrubbers and condensers are listed in Table 4.8.

(4) 50% excess air is used in the H_2 burner.

(5) Water scrubbers are single-pass, 38 ℓ/min, operating at 30°C.

(6) KOH scrubbers are recirculating systems operating at 30°C. Initial KOH concentration, 10 wt %; final concentration, 2 wt %.

Table 4.24. Chemical composition of solvent extraction waste streams - Cases 1 and 2,[a] for the model 10,000-metric ton/yr SX-F UF_6 plant

(Codes shown on Fig. 4.2)

Description	Solvent extraction raffinate[b]	Solvent treatment waste	Surplus weak acid
Code	2R	2T	2S
Volume, ℓ/day	75,700	45,400	42,800
HNO_3, M	1.26		0.26
OH^-, M		0.04	
Chemicals, kg/day			
Nitrate (NO_3^-) - SX additive	13,100	320	700
Ammonium (NH_4^+)			
Yellow cake feed	1,070		
SX additive	6	48	
Sodium (Na^+)			
Yellow cake feed	800		
SX additive	88	165	
Aluminum (Al^{3+}) SX additive	230		
Sulfate (SO_4^{2-})			
Yellow cake feed	980		
SX additive	16	127	
Arsenic (As)	20		
Calcium (Ca^{2+})	63		
Chloride (Cl^-)	23		
Fluoride (F^-)			
Yellow cake feed	3		
Scrap recycle	53		
Iron (Fe^{2+})	130		
Molybdenum (Mo)	33		
Phosphate (PO_4^{3-})	87		
Potassium (K^+)			
Yellow cake feed	43		
SX additive	54		
Vanadium (V)	40		
Silica (SiO_2)	400		

[a]In Case 1, the waste also contains barium (Ba^{2+}), which is added to the dissolver for radium control (Sect. 4.4.11.2).

[b]The raffinate may contain other chemicals in addition to those listed since UF_6 plants normally analyze only for substances which create difficulties in the process.

Table 4.25. Changes in the chemical composition of solvent extraction wastes - Cases 3 and 4

(Chemicals not listed are the same as in Table 4.24; discussion in Sects. 4.4.11.6 and 4.4.11.7)

	Chemicals (kg/day)					
	Solvent extraction raffinate			Solvent treatment waste		
Description	Cases 1 and 2	Case 3	Case 4	Cases 1 and 2	Case 3	Case 4
Nitrate (NO_3^-)	13,100	10,620[a]	12,800	320	320	320
Ammonium (NH_4^+)						
Yellow cake feed	1,070	350[a]	1,550[b]			
SX additive	6	6	6	48	48	48
Sodium						
Yellow cake	800	800	70[b]			
SX additive	88	88	-	165	165	c
Magnesium						
Yellow cake feed	-	-	-			
SX additive	-	-	-	-	-	96[c]
Potassium						
Yellow cake feed	43	43	43[d]			
SX additive	54	54	e			
Calcium						
Yellow cake feed	63	63	63			
SX additive	-	-	28[e]			

[a]60% of the yellow cake feed calcined at 370 to 400°C to volatilize ammonia.

[b]Restrict sodium ions in UF_6 plant feed to 0.2% avg.

[c]Replace NaOH used to precipitate uranium in solvent treatment with $Mg(OH)_2$.

[d]Restrict potassium to the average presently in the feed.

[e]Replace KOH scrubber on the miscellaneous dissolver with a $Ca(OH)_2$ scrubber.

Table 4.26. Radioactive materials in the solvent extraction waste streams for the model 10,000-metric ton/yr SX-F UF_6 plant[a]

(Codes shown on Fig. 4.2)

Description	Solvent extraction raffinate	Solvent treatment waste
Code	2R	2T
Volume, ℓ/day	7.57E+4	4.54E+4
Uranium		
g/ℓ	0.10E+0	0.02E+0
kg/day	7.57E+0	0.91E+0
Radioactive materials, Ci/yr		
U_{nat}[b]	7.57E-1	9.10E-2
^{234}Th	1.67E+3[c,d]	e
^{234m}Pa	1.67E+3[c,d]	e
^{230}Th	2.8E+1[f] (1.42E+2)[g]	e
^{226}Ra	2.0E+0[f] (1.57E+1)[g]	e

[a]Radioactive materials are not estimated for the surplus weak acid (Stream 2S), but are small relative to the raffinate.

[b]One curie of natural uranium is defined as the sum of 3.7×10^{10} dis/sec from ^{238}U, 3.7×10^{10} dis/sec from ^{234}U, and 9×10^{8} dis/sec from ^{235}U; it is also equivalent to 3000 kg of natural uranium.

[c]As generated, before decay of ^{234}Th and ^{234m}Pa.

[d]Assumes half of the ^{234}Th (and associated ^{234m}Pa) crosses with the uranium during solvent extraction and is allowed to decay before the fluorination ash is recycled.

[e]Small relative to raffinate.

[f]"Low-impurity" feed option; i.e., plant feed contains 2800 pCi of ^{230}Th and 200 pCi of ^{226}Ra per g of U_{nat}.

[g]"High-impurity" feed option; i.e., plant feed contains 14,200 pCi of ^{230}Th and 1600 pCi of ^{226}Ra per g of U_{nat}.

Table 4.27. Chemical composition of solid wastes generated in treating liquid solvent extraction wastes from the model 10,000-metric ton/yr SX-F UF_6 plant[a,b]

(Discussion in Sect. 4.4.11)

Type of waste generated	Case 1 Radwaste[c,d]		Case 2 Radwaste[c]	Case 4[b] Radwaste[c]	Case 4[b] Chemwaste		Case 3 Radwaste		
Waste treatment	Lime precipitation, $BaCO_3$ treatment		Ammonia precipitation	Magnesia precipitation, $BaCO_3$ treatment	Lime precipitation[c] (and ammonia removal)	Thermal denitration salt bleed, dried at ~ 280°C		Lime precipitation, $BaCO_3$ treatment dried at ~280°C	
Solid radwaste generated, kg/day									
U	7.3[e]		8.0	8.5	0.3	<0.1	U	8.0	
$Al(OH)_3$	660	(700)[g]	660	660	-	-	$Al_2O_3 \cdot 2H_2O$	590	(610)[g]
$CaSO_4 \cdot 2H_2O$	1450[f]	(1000)[g]	-	50[h]	1760[f]	6[i]	$CaSO_4$	1150[f]	(790)[g]
$BaSO_4$	190[f]	(940)[g]	-	190[f]	-	-	$BaSO_4$	190[f]	(940)[g]
SiO_2	400[j]		400[j]	400[j]	-	-	SiO_2	400[j]	
$Ca_3(AsO_4)_2$	50		-	-	50	-	$Ca_3(AsO_4)_2$	50	
CaF_2	111		116	56	60	-	CaF_2	110	
$Fe(OH)_3$	240		240	240	-	-	$Fe(OH)_3$	290[k]	
$CaMoO_4$	70		-	-	70	-	$CaMoO_4$	70	
$CaHPO_4 \cdot 2H_2O$	140		-	-	-	-	$Ca_2P_2O_7$	100	
$Ca(VO_3)_2$	90		-	-	90	-	$Ca(VO_3)_2$	90	
$Ca(OH)_2$	550[l]		-	-	80[l]	-	$Ca(OH)_2$	500[l]	
$Mg(OH)_2$	-		-	470[l]	440	-	$CaCO_3$	290[m]	
$MgNH_4PO_4 \cdot 6H_2O$	-		-	225	-	-	Sorbed salts	25[o]	(26)[o]
$NaNO_3$	-		-	-	-	246		3860[f]	(4270)[g]
KNO_3	-		-	-	-	111			
$MgSO_4$	-		-	-	-	71			
$MgCl_2$	-		-	-	-	4			
Sorbed salts	n	n	n	15[o]	n	-			
Total	3960[f]	(4300)[g]	1420	2320[f]	2570	440			

[a]There may be other chemicals in solvent extraction wastes in addition to those listed.

[b]In Case 4, all chemicals in the waste are either recovered or converted to solid wastes. In the other case studies, soluble salts are left in the liquid waste.

[c]Solid waste as generated; includes water of crystallization but not sorbed water.

[d]Does not include impurities in the lime.

[e]Does not include waste from solvent treatment, stream 2S.

[f]$BaCO_3$ treatment for 99% radium removal.

[g]$BaCO_3$ treatment for 99.8% radium removal; used with feed containing a "high" level of ^{226}Ra impurity (1600 pCi/g of U_{nat}).

[h]Impurity in MgO which is recovered and recycled.

[i]Present as $CaSO_4$ after drying at 280°C.

[j]Based on 1959 data and may be high.

[k]Includes 18 kg/day impurity in the lime which is recovered and recycled; used to promote coagulation during biofeed preparation.

[l]10% excess chemical added during liquid waste treatment.

[m]Impurity in the lime which is recovered and recycled.

[n]Sorbed salts not included.

[o]Washed on centrifuge.

Table 4.28. Case 1 liquid waste treatment flows for the model 10,000-metric ton/yr SX-F UF_6 plant

(Codes shown on Fig. 4.14; discussion in Sects. 4.4.11.4 and 4.4.12).

Code	Description	Volume ($\times 10^4$ ℓ/day)	Chemicals (metric tons/day)
1	$BaCO_3$ (radium removal)[a]		0.160
2R	Raffinate waste[b]	7.57	17.2
2	$Al_2(SO_4)_3$ (radium removal)		0.017
3	$Ca(OH)_2$ slurry to radwaste precipitation	0.76	6.1
4	Radwaste sludges[c]	0.44	4.0
5	Lime-treated raffinate[d]	8.33	18.2
2S	Surplus weak acid waste[b]	4.28	0.7
6	$Ca(OH)_2$ slurry to weak acid neutralization	0.06	0.5
2T	Solvent treatment waste[d]	4.54	0.7
4L	Hydrofluorination scrubber liquor[d]	1.64	0.2
7L	Fluorine cell scrubber liquor[d]	5.45	0.2
8K	Fluorination scrubber liquor[d]	1.89	1.9
7	Lime-treated surplus weak acid[d]	4.36	1.0
8	CaF_2 chemwaste sludges (stored)[d]	0.18	1.7
9	Liquid release[d]	26.6	20.1

[a]99% radium removal, for plant feed containing "low" levels of ^{226}Ra (200 pCi/g U_{nat}).

[b]Composition in Tables 4.24 and 4.26.

[c]Composition in Tables 4.27 and 4.11.

[d]Composition in Table 4.29.

Table 4.29. Composition of Case 1 liquid waste treatment streams for the model 10,000-metric ton/yr SX-F UF_6 plant

(Codes shown on Fig. 4.14; discussion in Sects. 4.4.11.4 and 4.4.12)

	Lime-treated raffinate	Solvent treatment waste	Lime-treated surplus weak acid	Hydro-fluorination scrubber liquor	Fluorination scrubber liquor	Fluorine cell scrubber liquor	CaF_2 chemwaste precipitate	Combined liquid effluent
Code	5	2T	7	4L	8K	7L	8	9
Volume (x 10^4 ℓ/day)	8.33	4.54	4.36	1.64	1.89	5.45	0.177[a]	26.6
Chemicals, metric tons/day								
H^+	-	-	-	0.008	-	0.010	-	-
OH^-	0.36	0.03	-	-	0.10	-	-	0.20
NO_3^-	13.10	0.32	0.70	-	-	-	-	14.12
Ca^{2+}	2.57	-	0.23	-	-	-	-	1.96
NH_4^+	1.08	0.04	-	-	-	-	-	1.12
Na^+	0.89	0.17	-	-	-	-	-	1.04
K^+	0.10	-	-	-	1.31	-	-	1.41
F^-	<0.01	-	-	0.15	0.50	0.18	-	0.03
SO_4^{2-}	0.12[h]	0.12	-	-	-	-	-	0.24[b]
$Ca(OH)_2$ (insoluble)	-	-	0.04	-	-	-	0.04	-
CaF_2 (insoluble)	-	-	-	-	-	-	1.66	-
Radioactive materials, Ci/yr								
U_{nat}[c]	2.38E-2	9.1E-2	-	3.3E-5	5.6E-2	-	9.3E-2	8.0E-2
^{234}Th	2.97E-1[d]	4.6E-2[e]	-	1.7E-5[e]	9.4E-4[e]	-	9.3E-2[f]	2.3E-1[g]
^{234m}Pa	2.97E-1[d]	4.6E-2[e]	-	1.7E-5[e]	9.4E-4[e]	-	9.3E-2[f]	2.3E-1[g]
^{230}Th	2.80E-2[h]	i	-	1.4E-7[h]	7.9E-6[h]	-	7.0E-5[h]	2.8E-2[h]
	(1.42E-1)[j]	i	-	(7.1E-7)[j]	(3.6E-4)[j]	-	(3.6E-4)[j]	(1.4E-1)[j]
^{226}Ra	2.00E-3[h]	i	-	1.0E-10[h]	5.7E-9[h]	-	4.5E-6[h]	2.0E-3[h]
	(3.12E-3)[j]	i	-	(7.8E-10)[j]	(4.4E-8)[j]	-	(7.0E-6)[j]	(3.1E-3)[j]

[a]Assumes solids settle to 0.96 kg/ℓ (60 lb/ft^3).

[b]Solubility of $CaSO_4 \cdot 2H_2O$ in water below 42°C is 2.1 g $CaSO_4$/ℓ (W. F. Linke, Solubilities, Vol. 1, 4th ed., p. 606, Van Nostrand, Princeton, N. J., 1958).

[c]One curie of natural uranium is defined as the sum of 3.7 x 10^{10} dis/sec from ^{238}U, 3.7 x 10^{10} dis/sec from ^{234}U, and 9 x 10^8 dis/sec from ^{235}U; it is also equivalent to 3000 kg of natural uranium.

[d]60-day retention in the radwaste settling basin.

[e]As generated; no decay.

[f]Stored 6 months so that ^{234}Th and ^{234m}Pa are in secular equilibrium with ^{238}U.

[g]14-day detention in the CaF_2 settling basin.

[h]"Low-impurity" feed option; i.e., plant feed contains 2800 pCi of ^{230}Th and 200 pCi of ^{226}Ra per g of U_{nat}.

[i]Negligible compared with Stream 5.

[j]"High-impurity" feed option; i.e., plant feed contains 14,200 pCi of ^{230}Th and 1600 pCi of ^{226}Ra per g of U_{nat}.

Table 4.30. Composition of SX Case 2 nitrate waste solution impounded in lagoons for the model 10,000 metric-ton/yr SX-F UF_6 plant

Chemicals	Quantity (metric tons/day)
NO_3^-	14.12
NH_4^+	3.63[a]
Na^+	1.04
SO_4^{2-}	1.12

Radioactive materials	Quantity (Ci/yr)	Concentration (μCi/ml)	
		Midwestern site[b]	New Mexico site[c]
U_{nat}[d]	4.92E-2	4.0E-6	6.0E-3
^{234}Th[e]	4.92E-2	4.0E-6	6.0E-3
^{234m}Pa[e]	4.92E-2	4.0E-6	6.0E-3
^{230}Th	2.80E-2[f] (1.42E-1)[g]	2.3E-3[f] (1.2E-2)[g]	3.4E-3[f] (1.7E-2)[g]
^{226}Ra[h]	2.0 E-1[f] (1.57E00)[g]	1.6E-2[f] (1.3E-1)[g]	2.4E-2[f] (1.9E-1)[g]

[a]Present as ammonium salts; does not include any dissolved NH_3.

[b]Assumes wastes concentrated to 400 g of soluble salts per liter (30% of original volume) and no additional precipitation of radioactive materials as wastes become more concentrated.

[c]Assumes wastes concentrated to 600 g of soluble salts per liter (20% of original volume) and no additional precipitation of radioactive materials as wastes become more concentrated.

[d]One curie of natural uranium is defined as the sum of 3.7×10^{10} dis/sec from ^{238}U, 3.7×10^{10} dis/sec from ^{234}U, and 9×10^{8} dis/sec from ^{235}U; it is also equivalent to 3000 kg of natural uranium.

[e]Stored 6 months so that ^{234}Th and ^{234m}Pa are in secular equilibrium with ^{238}U.

[f]"Low-impurity" feed option; i.e., plant feed contains 2800 pCi of ^{230}Th and 200 pCi of ^{226}Ra per g of U_{nat}.

[g]"High-impurity" feed option; i.e., plant feed contains 14,200 pCi of ^{230}Th and 1600 pCi of ^{226}Ra per g of U_{nat}.

[h]May also contain ^{226}Ra daughters through ^{214}Po, depending on how much ^{222}Rn gas escapes.

Table 4.31. Case 3 flows for radwaste precipitation and biofeed preparation, model 10,000-metric ton/yr SX-F UF_6 plant

(Codes shown on Fig. 4.17; discussion in Sect. 4.4.11.6)

Code	Description	Flows: Air (sm^3/min)	Flows: Liquid (x 10^4 ℓ/day)	Flows: Chemicals (metric tons/day)
1	Yellow cake direct to HNO_3 dissolver, as U			13.3
2	Yellow cake to feed calciner, as U			20.0
2c	Airborne NH_3 release	177		0.68
3	$BaCO_3$ (radium removal)			0.160
2R	Raffinate waste		7.6	17.4
4	$Al_2(SO_4)_3$ (radium removal)			0.017
5	$Ca(OH)_2$ slurry to radwaste precipitation		0.8	5.5[a]
6	Wash water		0.6	
7	Radwaste solids			4.0
8	Slurry water			
9	Dried radwaste solids		3.9	3.9
10A	Off-gas from drying and packaging	530		
11	Drums			(19.3 drums)
12	Lime-treated raffinate		8.8	14.6
2S	Surplus weak acid waste		4.3	0.7
2T	Solvent treatment waste		4.5	0.7
13 + 51	Recycle water, $NaHCO_3$		158	37.3
14	Combined feed to preaeration		176	53.1
15	$CaCO_3$ solids recycle to promote flocculation		0.1	0.6
16	$FeCl_3$ (coagulant)			0.026
17	Air to preaeration of biofeed	11.0		
18	CO_2 release from biofeed preparation	1.3		2.5
19	$Ca(OH)_2$ slurry to adjust pH of biofeed		0.1	0.52[a]
20	Air to flocculate biofeed	7.6		
21	Clarifier underflow ($CaCO_3$ sludge)		12.3	7.4
22	Centrifuge feed		11.3	6.8
23	$CaCO_3$ centrifuge cake (to lime recovery, Fig. 4.19)		0.2	6.8
24	Centrate		11.1	2.9
25	Clarifier overflow		165	40.0
26	Feed to bioreactors (Fig. 4.18)		177	42.9
53	Incinerator scrub liquor (from Fig. 4.19)		0.4	0.36

[a]Does not include $CaCO_3$ impurity in recycle lime.

Table 4.32. Nutrient amendments for Case 3 biological nitrification/denitrification[a,b]

Nutrient	Quantity (g/day)[c]
KH_2PO_4	77,000
$MgSO_4 \cdot 7H_2O$	356,000
H_3BO_3	4.4
$ZnSO_4 \cdot 7H_2O$	1.8
$NH_4Mo_7O_{24} \cdot 4H_2O$	0.9
$MnSO_4 \cdot 7H_2O$	1.1
$CuSO_4 \cdot 5H_2O$	2.0
$FeSO_4 \cdot 7H_2O$	1.1
KI	44.2
Fe-DTPA chelate	880

[a]C. W. Frances and J. B. Mankin, Water Res. 11, 290 (1977).

[b]C. W. Hancher, P. A. Taylor, and J. M. Napier, "Operation of a Fluidized-Bed Bioreactor for Denitrification," presented at Symposium on Biotechnology in Energy Production and Conservation, Gatlinburg, Tenn., May 10-12, 1978.

[c]Some of these nutrients may be naturally present in the feed.

Table 4.33. Case 3 flows for biological nitrification/denitrification, model 10,000-metric ton/yr SX-F UF_6 plant

(Codes shown on Fig. 4.18; discussion in Sect. 4.4.11.6)

Code	Description	Flows: Gases (sm^3/min)	Flows: Liquid (x 10^4 ℓ/day)	Flows: Chemicals or biomass (metric tons/day)
26	Feed to bioreactors (from biofeed preparation, Fig. 4.17)			
	NH_4^+-N		177	0.31
	NO_3^--N			2.63
	HCO_3^-			19.3
	$Na^+ + K^+$			11.5
	Organic oxygen demand			0.11
27	Trace nutrients			0.44
28	Biomass recycle to nitrification		31	6.17
30	Air to nitrification	65		
31	CO_2 release from nitrification	0.6		1.58
33	Clarifier underflow		31.2	6.24
34	Waste nitrification biomass to incinerator (Fig. 4.19)		0.3	0.060
35	Feed to nitrification			
	NO_3^--N		177	2.94
	HCO_3^-			17.2
	$Na^+ + K^+$			11.5
36	Biomass recycle to denitrification		23	4.6
37	Methanol to denitrification		0.95	7.5
38	N_2 release from denitration	1.5		2.8
39	Air to stabilization bioreactor	4.2		
40	CO_2 release from stabilization			0.05
41	Air to physical conditioning	0.1		
42	Clarifier underflow		30	6.0
43	Waste denitrification biomass to incinerator (Fig. 4.19)		7	1.4
44	Clarifier overflow		170	41
13	Recycle to biofeed preparation		152	37
45	Waste biomass from sand filter to incinerator (Fig. 4.19)			0.02
46	Purified wastewater released to a surface stream ($NaHCO_3 + KHCO_3$)		17.6	4.1

Table 4.34. Case 3 flows for lime recovery and biomass incineration, model 10,000-metric ton/yr SX-F UF_6 plant

(Codes shown on Fig. 4.19; discussion in Sect. 4.4.11.6)

Code	Description	Flows: Liquid ($\times 10^4$ ℓ/day)	Flows: Chemicals or biomass (metric tons/day)
23	$CaCO_3$ centrifuge cake to incinerator		
	$CaCO_3$		6.79
	H_2O		2.43
43 + 34 + 45	Waste biomass sludge	7.1	1.45[a]
47	$Ca(OH)_2$ slurry	0.4	0.29[b]
48	$FeCl_3$	0.5	0.072
49	Filter feed	7.2	1.88
50	Biomass filter cake to incinerator		
	Solids		1.88[c]
	H_2O		6.88
51	Filtrate recycled to biofeed preparation, Fig. 4.17	6.5	a
52	Recovered lime		
	$Ca(OH)_2$		4.82
	$CaCO_3$		0.34
	Fe_2O_3		0.05
53	Incinerator off-gas scrub liquor ($CaCO_3$ slurry)	0.4	0.36

[a]Biomass only; does not include $NaHCO_3$.

[b]Does not include $CaCO_3$ in recycle lime.

[c]Includes 410 kg of $CaCO_3$.

Table 4.35. Case 4 flows for radwaste precipitation and cementing, ammonia recovery, and chemwaste precipitation for model 10,000-metric ton/yr SX-F UF_6 plant

(Codes shown on Fig. 4.21; discussion in Sect. 4.4.11.7)

Code	Description	Flows: Liquid ($x10^4$ ℓ/day)	Flows: Chemicals (metric tons/day)
1	Low-sodium yellow cake (from uranium mills)		13.3
2	$BaCO_3$ (radium removal)		0.160
2R	Raffinate waste	7.6	16.7[a]
3	$Al_2(SO_4)_3$ (radium removal)		0.017
4	$Mg(OH)_2$ slurry to radwaste precipitation	0.8	5.1[b]
5	Wash water (1.5 ℓ/kg of solids)	0.3	
6	Radwaste solids	0.1	2.3[c]
7	Water	0.5	
8	Cement		7.0
9	Drums		(51.5 drums)
10	Cemented radwaste to burial ground		15.5[d,e]
11	Feed to ammonia remover and chemwaste precipitation	8.6	17.7[b]
12	$Ca(OH)_2$ slurry (precipitate chemwaste)	0.6	0.89
13	$Mg(OH)_2$ slurry to NH_3 removal	0.2	1.41[b]
14	Off-gas from NH_3	4.7	1.5
15	Recovered 28 wt % aqueous NH_3 to industry	0.58	1.5
16	Recovered water, recycled to process	4.1	
17	Wash water (2.0 kg/kg of solids)	0.5	
18	$CaSO_4 \cdot 2H_2O$ chemwaste to on-site impoundment		2.6[c,e]
19	$Mg(NO_3)_2$ solution to nitric acid recovery	5.1	15.6[b]

[a]Composition in Tables 4.24-4.26.

[b]Does not include impurities in recycle magnesia.

[c]Chemical composition in Table 4.27.

[d]Includes water but not weight of drums.

[e]Radioactive materials in Table 4.11.

Table 4.36. Case 4 flows for solvent treatment system with ammonia and water recycle, model 10,000-metric ton/yr SX-F UF_6 plant

(Codes shown on Fig. 4.22; discussion in Sect. 4.4.11.7)

		Flows						
			Chemicals (kg/day)					
Code	Description	Liquid ($\times 10^4$ ℓ/day)	U	NO_3^-	NH_3-N or NH_4^+-N	SO_4^{2-}	Mg^{2+}	OH^-
20	Stripped organic from solvent extraction	26.9	700	365	-	-	-	-
21	$(NH_4)_2SO_4$ wash	1.34	-	-	42	143	-	-
22	$Mg(OH)_2$ slurry to solvent wash	1.34	-	-	1.5	-	215	300
23	Scrub water	2.45	-	-	1.7	-	-	-
24	Recovered uranium	0.59	700	41	5.2	16	119	99
25[a]	Solvent treatment waste	4.54	0.9	324	40	127	96	0.2
26	$Mg(OH)_2$ slurry to NH_3 removal	0.01	-	-	< 0.1	-	32	45
27	Concentrated $Mg(NO_3)_2$-$MgSO_4$ solution to HNO_3 recovery	0.45	0.9	324	< 0.1	127	128	45
28	NH_3 and water recycle to $(NH_4)_2SO_4$ wash	1.14	-	-	37	-	-	-
29	Makeup $(NH_4)_2SO_4$	< 0.01	-	-	5.2	18	-	-
30	Makeup H_2SO_4	0.20	-	-	-	125	-	-
31	Water recycle	2.95	-	-	3.2	-	-	-

[a]Referred to elsewhere in report as Stream 2T.

Table 4.37. Case 4 flows for concentrating the nitrate in surplus weak acids for model 10,000-metric ton/yr SX-F UF_6 plant

(Codes shown on Fig. 4.22; discussion in Sect. 4.4.11.7)

Code	Description	Flows	
		Liquid ($\times 10^4$ ℓ/day)	Chemicals (kg/day)
2R	Surplus weak acid from process	4.3	710
32	Weak acids from waste treatment	1.6	580
33	$Mg(OH)_2$ slurry to neutralize weak acids	0.04	600[a]
34	Total flow to evaporator	5.9	1520[a]
35	Water vapor released to atmosphere	5.1[b]	
36	Concentrated $Mg(NO_3)_2$ solution to HNO_3 recovery	0.8	1520[a]

[a]Does not include impurities in recycle magnesia.

[b]Calculated as liquid water.

Table 4.38. Case 4 feed to nitric acid recovery system, model 10,000-metric ton/yr SX-F UF_6 plant

(Codes shown on Fig. 4.21-4.24; discussion in Sect. 4.4.11.7

	Treated raffinate[a]	Treated solvent treatment waste[a]	Treated weak acid waste[a]	Combined waste to nitric acid recovery	
Code	19	27	36	a	b,c
Volume, $x10^4$ ℓ/day	5.13	0.45	0.76	6.35	6.35
Chemicals, kg/day					
$Mg(NO_3)_2$	15,040	390	1,520	16,950	16,950
$NaNO_3$	246	-	-	246	740
KNO_3	111	-	-	111	330
$CaSO_4$	110	-	-	110	120
$MgSO_4$	-	159	-	159	210
$MgCl_2$	20	-	-	20	28
CaF_2	2	-	-	2	2
$Mg(OH)_2$	-	80	-	80	80
NH_3	2			2	2
Totals	15,500	630	1,520	17,700	18,400

[a]Pure magnesia used to neutralize.

[b]Recycle magnesia calcine with impurities used to neutralize.

[c]Assumes that one-third of the calcine is treated for Na^+ and K^+ removal before recycle.

Table 4.39. Case 4 flows for recovering nitric acid from solvent extraction wastes and from NO_x tail gases from $UO_2(NO_3)_2$ denitration for model 10,000-metric ton/yr SX-F UF_6 plant

(Codes shown on Fig. 4.24; discussion in Sect. 4.4.11.7)

Code	Description	Flows: Liquid ($\times 10^4$ ℓ/day)	Flows: Chemicals (metric tons/day)
19,27,36	Combined feed to nitric acid recovery (from Figs. 4.21-4.23)	6.4	18.4
37	Condensate from boildown, recycled to process or to waste treatment of weak acids	4.4	a
38	Calciner feed	2.0	32.3[b]
39	Calcine to MgO recovery (Fig. 4.25)	-	6.1
40	Nitric acid recovered by off-gas scrubber on waste calciner	1.60	4.4[c]
41	NO_x from waste denitration	-	7.0[d]
42	NO_x from $UO_2(NO_3)_2$ denitration	-	4.7[d,e]
43	Water (dilute acid) to NO_x absorber	2.5	
44	45 wt % HNO_3 recovered by NO_x absorber, recycled to digestion	2.36	13.6[c]
45	NO_x release to atmosphere		0.58[d,e]
46	HCl bleed from NO_x absorber	0.9	1.5
47	Feed to first chloride removal	2.5	5.9
48	Ozone to first sparge tank		0.043[f]
50	45 wt % HNO_3 recovered by rectifier, recycled to digestion	1.03	5.9
51	Rectifier overheads, ≤ 200 mg HNO_3/ℓ, released to a surface stream	1.5	< 0.003
52	Bleed to second chloride removal	3.3	∿5
53	Ozone to second sparge tank		0.014[g]
49, 54	Cl_2 release		0.023
	Ozone release		0.014
	HNO_3 release		0.004[d]

[a]Nitrate loss in evaporator overheads and vacuum pump seal leakage together arbitrarily estimated as 510 kg/day.

[b]Includes 3.3 moles of H_2O per mole of NO_3^-, or 13.9 metric tons of water.

[c]Engineering estimate. [d]Calculated as NO_2.

[e]Includes the NO_x from $UO_2(NO_3)_2$ denitration, but not the 10.6 MT of HNO_3 vapor from $UO_2(NO_3)_2$ which is condensed and recycled as in Cases 1-3.

[f]1 wt % ozone in air; gas sparge, 2.5 m^3/min (88 cfm).

[g]1 wt % ozone in air; gas sparge, 0.8 m^3/min (27 cfm).

Table 4.40. Case 4 flows for magnesia recovery system for model 10,000-metric ton/yr SX-F UF_6 plant[a]

(Codes shown on Fig. 4.25; discussion in Sect. 4.4.11.7)

Code	Description	Flows: Liquid ($\times 10^4$ ℓ/day)	Flows: Chemicals (metric tons/day)
39	MgO calcine (from Fig. 4.24)		6.1
55	Water to slaking	1.22	
56	Recovered $Mg(OH)_2$ slurry, recycled directly to waste treatment	0.67	4.5[b]
57	$Mg(OH)_2$ slurry plus impurities, to Na^+ and K^+ removal	0.34	2.7
58	Water to leaching (Na^+ and K^+ removal)	0.21	
59	Wash water	0.34	
60	Purified $Mg(OH)_2$, reslurried and recycled to waste treatment	0.12[c]	2.3
61	Condensate from chemwaste dryer, recycled to slaking	0.77	
62	Drums		(0.45 drum)
63	Solid chemwaste (soluble salts), to dry storage		0.44[d]

[a]Assumes that two-thirds of the calcine is recycled directly and one-third is water-leached to remove soluble salts.

[b]Does not include impurities in the recycle magnesia, which are estimated at 0.9 metric ton per day.

[c]Sorbed on $Mg(OH)_2$ centrifuge cake.

[d]Chemical composition in Table 4.27; radioactive materials in Table 4.11.

Table 4.41. Chemical treatment of liquid fluoride wastes - Cases 2-4, model 10,000-metric ton/yr SX-F UF_6 plant

(Codes shown on Figs. 4.3, 4.9-4.13, 4.27, and 4.28; chemical and radionuclide composition of liquid effluent in Tables 4.9 and 4.10; radionuclide composition of solid chemwaste in Table 4.11; discussion in Sect. 4.4.12.)

Code		Feed to fluoride treatment system: Volume treated ($\times 10^4$ ℓ/day)	Chemicals (kg/day)[a]: F^-	CO_3^{2-}	K^+	U	CaO usage (kg/day)[b]	Solid chemwaste generated (kg/day): CaF_2	$CaCO_3$	$Ca(OH)_2$[c]	U[d]	Total	Destination of liquid effluent from fluoride treatment
Cases 2 and 3													
	Water fluoride scrubbers												
4L	Hydrofluorination	1.64	144	-	-	<0.01	233	296	-	28	<0.01	324	
7L	Fluorine cells	5.45	172	-	-	-	279	353	-	33	-	386	
	Subtotal	7.09	316	-	-	<0.01	512	649	-	61	<0.01	710	Released
	KOH fluoride scrubbers												
4K	Hydrofluorination	0.06	16	-	32	<0.01	26	33	-	3	<0.01	36	
7K	Fluorine cells	0.09	19	7	65	-	38	39	12	5	-	56	
8K	Fluorination	1.89	500	46	1310	0.57	859	1030	77	103	0.57	1210	
	Subtotal	2.04	535	53	1410	0.57	923	1100	89	111	0.57	1300	Recycled
Case 4													
	Water fluoride scrubbers												
7L	Fluorine cells	5.45	76	-	-	-	123	157	-	15	-	172	Released
	KOH fluoride scrubbers												
4K	Hydrofluorination	0.06	16	-	90	<0.01	26	32	-	3	<0.01	35	
7K	Fluorine cells	0.01	8	7.0	37	-	21	18	12	3	-	33	
8K	Fluorination	0.55	149	0.8	114	0.17	243	307	1	29	0.17	337	
	Subtotal	0.62	173	7.8	241	0.17	290	357	13	35	0.17	405	Recycled

[a] Hydronium (H_3O^+, acid) for water scrubber liquors and hydroxide (OH^- base) for KOH scrub liquors not shown.

[b] Includes 10% excess.

[c] With time, excess $Ca(OH)_2$ will tend to react with CO_2 in the environment to form $CaCO_3$.

[d] Maximizing assumptions: 100% of the uranium in solution precipitates; 10% remains in solution (i.e., sum does not balance - purpose is to avoid underestimating either waste).

Table 4.42. Radon release from active radwaste impoundments,[a] model 10,000-metric ton/yr SX-F UF_6 plant
(Values in parentheses are presented for comparative purposes and are not a case study.)

Option	^{222}Rn diffusion from wet sludge (Ci/yr)			^{226}Ra inventory in liquid waste (Ci)		^{222}Rn generated in liquid waste (Ci/yr)		Total ^{222}Rn release from radwaste impoundment (Ci/yr; stirred pond model)		
	Case 1	Case 2		Case 1	Case 2	Case 1	Case 2		Case 2	
		Midwest site	New Mexico site					Case 1	Midwest site	New Mexico site
	1.33×10^4 m^2 (3.28 acres) of sludge	2.88×10^4 m^2 (7.12 acres) of sludge	1.09×10^4 m^2 (2.70 acres) of sludge	1-yr accumulation	15-yr accumulation	1-yr accumulation	15-yr accumulation			
Without $BaCO_3$ treatment										
"Low"-impurity feed[b]	n.a.	107[c]	41[c]	n.a.	3.0	n.a.	198	n.a.	306	239
"High"-impurity feed[d]	n.a.	840[e]	320[e]	n.a.	23.6	n.a.	1560	n.a.	2400	1880
With $BaCO_3$ treatment										
"Low"-impurity feed,[b] 99% radium removal	20[f]	(108)[g]	(41)[g]	0.002	(0.030)	0.1	(2.0)	20	(110)	(43)
"High"-impurity feed,[d] 99.8% radium removal	143[h]	(560)[i]	(210)[i]	0.003	(0.047)	0.2	(3.1)	143	(560)	(210)

[a]In addition, there will be a long-term ^{222}Rn emanation from the repository where the wastes are buried.

[b]Plant feed contains 200 pCi of ^{226}Ra per g of U_{nat}.

[c]Ammonia-precipitated solids, J_o = 3.76 E-3 Ci of $^{222}Rn/m^2 \cdot yr$.

[d]Plant feed contains 1600 pCi of ^{226}Ra per g of U_{nat}.

[e]Ammonia-precipitated solids, J_o = 2.94 E-2 Ci of $^{222}Rn/m^2 \cdot yr$.

[f]Lime-precipitated solids, J_o = 1.94 E-3 Ci of $^{222}Rn/m^2 \cdot yr$.

[g]Ammonia-precipitated solids, J_o = 3.69 E-3 Ci of $^{222}Rn/m^2 \cdot yr$.

[h]Lime-precipitated solids, J_o = 1.08 E-2 Ci of $^{222}Rn/m^2 \cdot yr$.

[i]Ammonia-precipitated solids, J_o = 1.96 E-2 Ci of $^{222}Rn/m^2 \cdot yr$.

n.a. = not applicable.

Table 6.1. Estimated capital and annual costs and contribution to power cost of waste treatment for model 10,000-metric ton/yr SX-F UF_6 plant

Waste treatment	Cost ($1000) Capital cost[a]	Annual fixed charge	Annual operating cost	Total annual cost	Contribution to power cost[b] (mills/kWhr)
Case 1					
Base case					
Case 2					
Dust control	627	163	35	198	
Process off-gas	157	41	16[c]	57	
Building ventilation	-	-	-	-	
Liquid and solid waste	1469[d,e]	383	74[f]	457	
Total	2253	587	125	712	0.0013
Case 3					
Dust control	1062	276	60	336	
Process off-gas	190	49	19[c]	68	
Building ventilation	598[g]	155	57	212	
Liquid and solid waste	4763[d]	1239	761[h]	2000	
Total	6613	1719	897	2616	0.0048
Case 4					
Dust control	845	220	55	274	
Process off-gas	525	136	53	190	
Building ventilation	3202[g]	832	165	997	
Liquid and solid waste	3326[d]	861	1041[i]	1902	
Total	7898	2049	1314	3363	0.0062

[a]Includes direct cost (installed equipment but not structure cost) and indirect cost. The interest during construction is included as an indirect cost.

[b]The contribution to power cost is calculated on the basis of a 10,000-metric ton/yr UF_6 conversion plant servicing a nuclear economy of about seventy-seven 1000-MW(e) LWRs (irradiation level, 33,000 MWd/metric ton; load factor, 80%; thermal efficiency 32.5%). The costs include the direct charges but do not include the effect of carrying charges on fuel working capital.

[c]Includes operating cost credit of $1400 for different venturi scrubbers.

[d]Includes capital cost credit of $336,000 for replacement of Case 1 radwaste impoundment.

[e]Includes capital cost credit of $55,600 for replacement of Case 1 $BaCO_3$ treatment equipment.

[f]Includes additional operating cost for ammonia of $66,900; lime cost credit for Case 1 of $28,500.

[g]Includes capital cost credit of $360,000 for Case 1 building exhaust fans.

[h]Includes additional operating costs for methanol of $262,000 and drums of $57,900; lime cost credit for Case 1 of $20,600.

[i]Includes additional operating costs for cement of $537,000, drums of $156,000, and magnesia of $26,400; lime cost credit for Case 1 of $37,000.

Table 6.2. Installed costs of equipment for the model 10,000-metric ton/yr SX-F UF_6 plant
WASTE TREATMENT CASE 2

Item	Costs without structure ($1000) Direct[a]	Capital[b]
Pulse-jet bag filter, 10,000 cfm	84.0	202
Pulse-jet bag filter, 12,000 cfm	95.0	228
Pulse-jet bag filter, 4000 cfm	29.0	118
Pulse-jet bag filter, 2000 cfm	33.0	79
H_2O venturi scrubber, condenser, and demister, 850 cfm	11.6	27.8
KOH packed tower, 12 in. diam x 15 ft high, SS	12.8	30.7
Pump, 1 gpm, centrifugal	1.3	3.1
Mixing tank, 250 gallon, CS	4.3	10.3
KOH packed tower, 12 in. diam x 15 ft high, SS	12.8	30.7
KOH packed tower, 1.6 ft diam x 15 ft high, SS	17.0	40.8
Pump, 1 gpm, centrifugal	1.3	3.1
Mixing tank, 250 gallon, CS	4.3	10.3
Centrifuge, 7-in. vertical basket	4.3	10.3
Mixing tank, 2000 gallon, CS (2)	23.5	56.4
Filter, rotary drum vacuum, 15 ft^2	16.5	39.3
Pump, 5 gpm, centrifugal (4)	6.0	14.4
Lime storage tank, 1400 gallon, CS	2.7	6.5
Lime conveyor, screw, 6 in. diam x 20 ft	7.6	18.2
Filter cake conveyor, screw, 6 in. diam x 25 ft	9.6	23.0
Slurry mix tank, 2000 gallon CS (2)	23.5	56.4
Slurry pump, 1 gpm, centrifugal	1.3	3.1
Pipeline, 1000 ft, 3-in. ABS, 150 pipe	1.9	4.6
Lime storage tank, 1400 gallon, CS	2.7	6.5
Lime conveyor screw, 6 in. diam x 20 ft	7.6	18.2
Mixing tank, lead-lined, 500 gallon (2)	18.9	45.4
Pump, 15 gpm, centrifugal	1.7	4.1
Pipeline, 1000 ft, 3-in. ABS, 150 pipe	1.9	4.6
Mixing tank, lead-lined, 500 gal (2)	18.9	45.4
Pump, 1 gpm, metering (2)	4.8	11.5
pH control equipment	8.0	19.2
Lagoon, lined, 7.6 acres (3)	606.3[c,d]	1455.1[c,d]
Pump, 300 gpm, centrifugal	6.0[c,e]	14.5[c,e]
Pipeline, 1000 ft, 3-in. ABS, 150 pipe[d]	1.9[c,e]	4.6[c,e]

[a]Cost for 1973. Direct cost includes purchase cost and complete installation cost.

[b]Capital costs are calculated by multiplying the direct cost by 2.4. Capital costs include direct and indirect costs.

[c]Midwestern site.

[d]For New Mexico site, two 5.4-acre lined lagoons and one 3-acre lined lagoon; direct cost, $319,200 and $103,600 respectively; capital cost, $766,100 and $248,800 respectively.

[e]Not required for New Mexico site.

Table 6.3. Installed costs of equipment for the model 10,000-metric ton/yr SX-F UF_6 plant
WASTE TREATMENT CASE 3

Item	Costs without structure ($1000)	
	Direct[a]	Capital[b]
Pulse-jet bag filter, 10,000 cfm	84.0	202
Pulse-jet bag filter, 17,000 cfm	118	283
Pulse-jet bag filter, 4000 cfm	49.0	118
Pulse-jet bag filter, 2000 cfm	33.0	79
Pulse-jet bag filter, 15,000 cfm	109	262
Pulse-jet bag filter, 4000 cfm	49.0	118
Baffle orifice scrubber, 60,000 cfm (6)	399	958
H_2O venturi scrubber, condenser, and demister 850 cfm	11.6	27.8
KOH packed tower, 12 in. diam x 15 ft high, SS	12.8	30.7
Pump, 1 gpm, centrifugal	1.3	3.1
Mixing tank, 250 gallon, CS	4.3	10.3
KOH packed tower, 12 in. diam x 15 ft high, SS	12.8	30.7
KOH packed tower, 1.6 ft diam x 15 ft high, SS	17.0	40.8
Pump, 1 gpm, centrifugal	1.3	3.1
Mixing tank, 250 gallon, CS	4.3	10.3
KOH venturi scrubber and demister, 1200 cfm	13.8	33.0
Centrifuge, 7-in. vertical basket	4.3	10.3
Mixing tank, 2000 gallon, CS (2)	23.5	56.4
Filter, rotary drum vacuum, 15 ft^2	16.5	39.3
Pump, 5 gpm, centrifugal (4)	6.0	14.4
Lime storage tank, 1400 gallon, CS	2.7	6.5
Lime conveyor, screw, 6 in. diam x 20 ft	7.6	18.2
Filter cake conveyor screw, 6 in. diam x 25 ft	9.6	23.0
Slurry mix tank, 2000 gallon, CS (2)	23.5	56.4
Slurry pump, 1 gpm, centrifugal	1.3	3.1
Pipeline, 1000 ft, 3-in. ABS, 150 pipe	1.9	4.6
Lime storage tank, 1400 gallon, CS	2.7	6.5
Lime conveyor screw, 6 in. diam x 20 ft	7.6	18.2
Mixing tank, lead-lined, 500 gallon (2)	18.9	45.4
Pump, 15 gpm, centrifugal	1.7	4.1
Pipeline, 1000 ft, 3-in. ABS, 150 pipe	1.9	4.6
Mixing tank, lead-lined, 500 gallon (2)	18.9	45.4
Pump, 1 gpm, metering (2)	4.8	11.5
pH control equipment	8.0	19.2

Table 6.3 (continued)

Item	Costs without structure ($1000) Direct[a]	Capital[b]
Feed calciner	30	72
Pulse jet bag filter, 5000 cfm	56	134.4
Lagoon, lined, 1.5 x 10^6 gal (holding pond for liquid nitrate waste)	40	96
Precipitator, 18,500 gal	18	43.2
Centrifuge, 16 gpm	7	16.8
Slurry mix tank, 250 gal, CS	4.3	10.3
Spray dryer (includes bag filter)	246	590.4
Pulse-jet bag filter (for radwaste drumming), 4000 cfm	49	118
Flash mixer	2.2	5.28
Preaerator, 7000 gal	22	52.8
Flocculator, 7000 gal	22	52.8
Clarifier, 600 ft^2	147	352.8
Centrifuge, 20 gpm	7	16.8
Nitrification reactor, 6.1 x 10^4 gal (2)	38	91.2
Clarifier, 650 ft^2	150	360
Denitrification bioreactor, 1.0 x 10^6 gal (2)	350	840
Aerated bioreactor, 1.1 x 10^4 gal (2)	34	81.6
Physical conditioner, 1000 gal (2)	18	43.2
Clarifier, 735 ft^2	180	432
Sand filter, 32 gpm	100	240
Mixer, 12 gpm	8.6	20.6
Filter, rotary drum, 60 ft^2	36	86.4
Multiple-hearth furnace (includes cyclone)	247	592.8
Venturi scrubber, 1000 cfm	12.5	30
Cloth bag filter (for lime dusts), 4000 cfm	15	36
Lime slaker	13.3	31.9
Blower, 20 x 10^3 cfm	11.3	27.0
Pump, 300 gpm, centrifugal (3)	18	43.2
Pump, 400 gpm, centrifugal	6.4	15.4
Pump, 20 gpm, centrifugal (2)	3.4	8.2
Pump, 20 gpm, slurry (4)	6.8	16.4
Pump, 1 gpm, slurry (3)	3.9	9.3
Pump, 1 gpm, metering (3)	9.0	21.6
Pump, 1.5 gpm, metering	3.8	8.2

[a]Cost for 1973. Direct cost includes purchase cost and complete installation cost.

[b]Capital costs are calculated by multiplying the direct cost by 2.4. Capital costs include direct costs and indirect costs.

Table 6.4. Installed costs of equipment for the model 10,000-metric ton/yr SX-F UF_6 plant

WASTE TREATMENT CASE 4

Item	Costs without structure ($1000) Direct[a]	Capital[b]
Pulse-jet bag filter, 10,000 cfm	84.0	202
Pulse-jet bag filter, 12,000 cfm	95.0	228
Pulse-jet bag filter, 4000 cfm	49.0	118
Pulse-jet bag filter, 2000 cfm	33.0	79
HEPA filter, 10,000 cfm	15	36
HEPA filter, 12,000 cfm	18	43.2
HEPA filter, 4000 cfm	6	14.4
HEPA filter, 2000 cfm	3	7.2
Blowers	35.8	85.9
Duct	13.1	31.4
Pulse-jet bag filters, 60,000 cfm (6)	1484	3562
H_2O venturi scrubber, condenser, and demister, 850 cfm	11.6	27.8
Karbate condenser, 10^6 Btu/hr (2)	12.0	28.8
Refrigeration unit, 2 ton with brine tank and sump	12.0	28.8
KOH packed tower, 12 in. diam x 15 ft high, SS	12.8	30.7
Pump, 1 gpm centrifugal	1.3	3.1
Mixing tank, 250 gal, CS	4.3	10.3
Karbate condenser, 17.7 ft^2 (2)	4.5	10.8
Refrigeration unit, 7 ton, -120°F	136.0	326.4
KOH packed tower, 1.6 ft diam x 15 ft high, SS	17.0	40.8
Pump 1 gpm, centrifugal	1.3	3.1
Mixing tank, 250 gal, CS	4.3	10.3
KOH venturi scrubber and demister, 1200 cfm	13.8	33.1
Natural-gas air heater, 1584 Btu/min	0.5	1.2
HEPA, 1000 cfm	1.5	3.6
Blower	1	2.4
Duct	0.3	0.7
Mixing tank, 6400 gal, CS (2)	44.3	106.3
Pump, 20 gpm centrifugal (2)	3.4	8.2
Lime conveyor, screw, 6 in. diam x 20 ft	7.6	18.2
Pipeline, 1000 ft, 3-in. ABS, 150 pipe	1.9	4.6
Lagoon, lined, 1.4 x 10^5 gal (CaF_2 settling basin)	10.6	25.4
Centrifuge, 12-in. vertical basket	7.8	18.7
Mixing tank, 2500 gal, CS (2)	27.7	66.5

Table 6.4 (continued)

Item	Costs without structure ($1000) Direct[a]	Capital[b]
Lime conveyor, screw, 6 in. diam x 20 ft	7.6	18.2
Filter, rotary drum, 3 ft^2	6.3	15.1
Pump, 5 gpm, centrifugal (4)	6.0	14.4
Lagoon, lined, 8.4 x 10^5 gallon (CaF_2 pit)	31.0	74.4
Mixing tank, lead-lined, 500 gallon (2)	18.9	45.4
Pumps, 1 gpm, metering (2)	4.8	11.5
pH control equipment	8.0	19.2
Lagoon, lined, 1.1 x 10^6 gallon (holding pond for liquid nitrate waste)	39	93.6
Precipitator, 18,500 gallon	18	43.2
Centrifuge	7	16.8
Cement plant	56.1	134.6
Surge tank, 25,000 gallon	44	105.6
Evaporator, batch, 25,000 gallon	360	864
Demister, 300 cfm	0.3	0.7
Ammonia rectifier	24.8	59.5
Centrifuge, 18 gpm	7.0	16.8
Charcoal filter, 8 gpm	3.8	9.1
Lagoon, lined, 3.2 x 10^6 gallon (for $CaSO_4$ chemwaste)	70	168
Dump bin, 40 ft^3	1.0	2.4
Holding tank, 7000 gallon	20.5	49.2
Evaporator, batch, 6000 gallon	176.6	423.8
Condenser	8.0	19.2
Charcoal filter, 5 gpm	3.1	7.4
Neutralizer, 10 gpm	4.5	10.3
Evaporator, 72 ft^2	29	71
Condenser, 72 ft^2	8.0	19
Boildown evaporator, 15 gpm	3.6	8.6
Condenser, 8 gpm	8.0	19.2
Charcoal filter, 8 gpm	3.8	9.1
Denitrator, SS	34	81.6
Baffle scrubber, SS	9.8	23.5
Condenser, 169 cfm	8.6	20.6
Absorption tower, 85 cfm, SS	112	268.8
Ozone sparger, 600 gallon, SS	16	38.4
Demister, 1200 cfm, SS	1.2	2.9

Table 6.4 (continued)

Item	Costs without structure ($1000) Direct[a]	Capital[b]
Nitric acid rectifier, 4.5 gpm	58.8	141.1
Heat exchanger, SS	1.0	2.4
Ozone sparger, 750 gal, SS	20	48
Demister, 327 cfm, SS	0.6	1.4
Ozone generator, 60 lb/day, SS (2)	201	482.4
Grinder (pulverizer)	9.6	23.0
Slaker	17.3	41.5
Cloth bag filter, 6000 cfm (for MgO dusts)	20	48
Cloth bag filter, 6000 cfm (for MgO dusts)	20	48
Leacher, 250 gal	4.5	10.8
Centrifuge, 11-in. vertical basket	7.0	16.8
Condenser	2.8	6.7
Wiped-film evaporator, 1.4 gpm	15.7	37.7
Condenser	2.8	6.7
Cloth bag filter (for drumming waste salts)	3.8	9.1
Blower, 1000 cfm	1.8	4.3
Blower, 300 cfm	0.8	1.9
Pump, 20 gpm, centrifugal (8)	13.6	32.0
Pump, 20 gpm, slurry (4)	6.8	16.0
Pump, 1 gpm, centrifugal (4)	5.2	12.4
Pump, 1 gpm, slurry (3)	3.9	9.3
Pump, 1 gpm, metering (5)	15.0	36.0
Pump, 5 gpm, centrifugal, SS (2)	6.8	16.2
Pump, 3 gpm, centrifugal, SS	3.4	8.1
Pump, 2 gpm, centrifugal, SS	2.6	6.2

[a]Costs for 1973. Direct cost includes purchase cost and complete installation cost.

[b]Capital costs are calculated by multiplying the direct cost by 2.4. Capital costs include direct and indirect costs.

Table 7.1. Latitude-longitude coordinates used to derive data sets for population distribution

	Latitude (N)	Longitude (W)
Midwestern site	35° 52' 50"	97° 35' 00"
	38° 12' 18"	90° 28' 28"
	41° 22' 43"	88° 16' 36"
Western (milling) site	35° 15' 50"	107° 55' 50"
	35° 24' 30"	107° 50' 00"
	43° 04' 00"	105° 30' 00"
	42° 49' 00"	107° 37' 00"
	38° 19' 30"	108° 45' 00"

Table 7.2. Representative population distribution at successive distances for midwestern site

Sector	Radial distance (miles)											
	0-0.5	0.5-1	1-2	2-3	3-4	4-5	5-10	10-15	15-25	25-35	35-45	45-55
N	0	0	0	0	0	252	2,007	1,037	19,193	108,738	96,229	46,889
NNE	0	0	0	0	0	816	847	7,688	40,643	347,330	300,030	300,804
NE	0	0	0	0	0	709	936	23,608	22,601	77,981	625,661	575,054
ENE	0	0	0	0	652	1197	1,906	1,377	8,737	85,826	192,983	110,272
E	0	0	0	365	0	452	3,506	254	1,824	10,629	14,875	24,482
ESE	0	0	0	0	69	2	799	972	3,323	4,470	8,449	4,378
SE	0	0	0	13	537	482	1,022	696	3,241	23,827	5,080	15,453
SSE	0	0	0	0	0	0	1,796	706	10,056	41,868	4,461	7,339
S	0	0	0	87	0	72	1,498	908	30,234	100,668	10,935	17,328
SSW	0	0	0	0	0	98	626	586	3,588	6,416	7,425	3,933
SW	0	0	146	0	0	0	2,233	428	2,614	6,862	1,717	3,257
WSW	0	0	0	0	526	0	907	202	1,380	8,621	2,690	4,601
W	0	0	0	0	0	0	3,128	655	4,400	8,192	14,438	8,317
WNW	0	0	0	0	132	77	505	402	1,424	6,379	4,908	3,646
NW	0	260	0	0	0	0	346	1,083	8,288	5,991	6,200	4,146
NNW	0	0	0	0	544	0	579	829	5,823	5,027	28,615	20,359
Total (by distance)	0	260 ±449[a]	146 ±220	465 ±804	2460 ±1453	4157 ±4280	22,641 ±8,469	40,498 ±49,447	167,369 ±42,111	848,825 ±378,192	1,324,696 ±1,536,279	1,150,618 ±1,698,458
Cumulative	0	260	406	871	3331	7488	30,129	70,627	237,996	1,086,821	2,411,517	3,562,135
Density (ind./mile^2)	← 95 →						96	← 126 →		← 440 →		

[a]Standard deviation of the mean (total).

Table 7.3. Representative population distribution at successive distances for western (milling) sites in the United States

Sector	Radial distance (miles)											
	0-0.5	0.5-1	1-2	2-3	3-4	4-5	5-10	10-15	15-25	25-35	35-45	45-55
N	0	0	0	0	0	0	38	0	0	5	306	2,330
NNE	0	0	0	0	146	0	0	0	0	67	259	6,053
NE	0	0	0	0	0	0	0	0	0	80	194	1,197
ENE	0	0	0	0	0	0	0	0	105	91	909	2,232
E	0	0	0	0	0	0	0	71	0	58	39	755
ESE	0	0	0	0	0	0	0	426	0	483	193	328
SE	0	0	0	0	0	0	995	164	0	411	295	7
SSE	0	0	0	0	0	0	1196	0	722	365	268	353
S	0	0	0	0	0	0	0	0	1931	0	225	0
SSW	0	0	0	0	0	0	0	327	580	280	206	0
SW	0	0	0	0	0	0	0	0	303	179	466	92
WSW	0	0	191	0	0	0	0	0	168	181	5,578	5,226
W	0	0	0	0	0	0	97	197	0	79	69	4,185
WNW	0	0	0	0	0	0	0	102	135	338	2,954	4,881
NW	0	0	0	0	0	0	0	0	0	643	858	365
NNW	0	0	0	0	0	0	0	197	91	410	197	181
Mean (by distance)	0	0	12 ±106[a]	0	9 ±81	0	145 ±865	93 ±275	255 ±1063	229 ±458	813 ±3,271	1,761 ±4,828
Cumulative	0	0	191	191	337	337	2663	4147	8182	11,852	24,868	53,053
Density (ind./mile^2)			← 4.3 →				9.9	← 3.0 →			← 7.1 →	

[a]Standard deviation of the mean.

Table 7.4. Maximum annual doses[a] to individuals[b,c] from airborne effluents from a model SX-F UF_6 plant -- "low-impurity" feed[d] -- assuming that 100% of the food is produced locally

ALL AIRBORNE EFFLUENTS

Airborne radwaste treatment case	Individual total-body dose (mrem)	Adult organ doses (mrem)									
		GI tract	Bone	Thyroid	Lung	Muscle	Kidney	Liver	Spleen	Testes	Ovaries
						Midwestern site					
1	3.0E00	2.9E00	2.8E+1	3.3E00	1.8E+1	2.8E00	7.0E00	2.6E00	2.4E00	3.0E00	2.1E00
2	1.0E00	9.6E-1	9.4E00	1.1E00	8.4E00	9.5E-1	3.0E00	1.1E00	1.2E00	1.0E00	7.2E-1
3	3.6E-1	3.4E-1	4.0E00	3.8E-1	2.0E00	3.4E-1	9.6E-1	3.4E-1	3.0E-1	3.6E-1	2.6E-1
4	1.9E-3	1.7E-3	1.4E-2	2.0E-3	5.7E-2	1.8E-3	1.7E-2	4.8E-3	8.2E-3	2.0E-3	1.4E-3
						New Mexico site					
1	4.2E00	4.0E00	3.9E+1	4.6E00	2.6E+1	3.9E00	9.7E00	3.7E00	3.4E00	4.2E00	3.0E00
2	1.4E00	1.3E00	1.3E+1	1.5E00	1.1E+1	1.3E00	4.0E00	1.4E00	1.5E00	1.4E00	9.8E-1
3	5.0E-1	4.6E-1	5.7E00	5.4E-1	3.0E00	4.7E-1	1.3E00	4.7E-1	4.2E-1	5.0E-1	3.7E-1
4	2.7E-3	2.4E-3	1.9E-2	2.8E-3	8.0E-2	2.5E-3	2.4E-2	6.8E-3	1.2E-2	2.8E-3	2.0E-3

[a] 50-yr dose commitment from exposure to effluents from one year's operation of the model plant.

[b] Maximum dose to individual at 0.5 mile (800 m) and downwind of the prevailing wind direction. Release height: 5 m. Average dose is 47% of the maximum.

[c] All food is produced and consumed at the location of the dose calculation. Daily intakes are 1.0 liter of milk, 0.25 kg of vegetables, and 0.3 kg of beef.

[d] 10,000-metric ton/yr solvent extraction-fluorination plant; plant feed contains 2800 pCi of ^{230}Th and 200 pCi of ^{226}Ra per gram of U_{nat}.

Table 7.4a. Doses[a] to individuals and to population from airborne effluents from a model SX-F UF_6 plant — "low-impurity" feed[b]

PROCESS DUST CONTROL EFFLUENT

Airborne radwaste treatment case	Maximum annual individual doses at 0.5 mile (800 m)				Annual doses to population within 55 miles (88 km)	
	Total-body dose (mrem)	Adult organ doses (mrem)			Total body (person-rem)	Bone (person-organ-rem)
		Bone	Lung	Kidney		
			Midwestern site			
1	1.5E00	1.5E+1	9.0E00	3.6E00	1.6E00	1.3E+1
2	2.1E-1	2.1E00	1.3E00	5.0E-1	2.2E-1	1.9E00
3[c]	2.6E-1	2.5E00	1.5E00	6.2E-1	2.7E-1	2.3E00
4	1.1E-4	1.1E-3	6.4E-4	2.6E-4	1.1E-4	9.5E-4
			New Mexico site			
1	2.1E00	2.1E+1	1.3E+1	5.0E00	3.5E-2	3.3E-1
2	2.9E-1	2.9E00	1.8E00	7.1E-1	4.8E-3	4.6E-2
3[c]	3.6E-1	3.6E00	2.2E00	8.6E-1	5.9E-3	5.6E-2
4	1.5E-4	1.5E-3	9.1E-4	3.6E-4	2.5E-6	2.3E-5

[a] 50-yr dose commitment from exposure to effluents from one year's operation of the model plant. All food produced locally. Release height: 5 m.

[b] 10,000-metric ton/yr solvent extraction-fluorination plant; plant feed contains 2800 pCi of ^{230}Th and 200 pCi of ^{226}Ra per gram of U_{nat}.

[c] Case 3 releases are slightly higher than Case 2 because an additional dust generating step -- a yellow cake calciner -- has been added to reduce the quantity of ammonium ions in the liquid waste.

Table 7.4b. Doses to individuals[a] and to population from airborne effluents from a model SX-F UF_6 plant — "low-impurity" feed[b]

PROCESS OFF-GAS

Airborne radwaste treatment case	Maximum annual individual doses at 0.5 mile (800 m)				Annual doses to population within 55 miles (88 km)	
	Total-body dose (mrem)	Adult organ doses (mrem)			Total body (person-rem)	Bone (person-organ-rem)
		Bone	Lung	Kidney		
			Midwestern site			
1	9.2E-1	7.4E00	5.6E00	1.9E00	9.7E-1	7.1E00
2	1.4E-1	1.1E00	8.5E-1	2.8E-1	1.5E-1	1.1E00
3	9.4E-3	8.4E-2	5.7E-2	2.1E-2	1.4E-2	7.8E-2
4	4.2E-6	3.8E-5	2.5E-5	9.2E-6	4.4E-6	3.5E-5
			New Mexico site			
1	1.3E00	1.0E+1	8.0E00	2.6E00	2.1E-2	1.6E-1
2	1.9E-1	1.5E00	1.2E00	3.9E-1	3.2E-3	2.4E-2
3	1.3E-2	1.2E-1	8.1E-2	2.9E-2	2.2E-4	1.9E-3
4	5.9E-6	5.3E-5	3.6E-5	1.3E-5	9.6E-8	8.3E-7

[a] 50-year dose commitment from exposure to effluents from one year's operation of the model plant. All food produced locally. Release height: 5 m.

[b] 10,000-metric ton/yr solvent extraction-fluorination plant; plant feed contains 2800 pCi of ^{230}Th and 200 pCi of ^{226}Ra per gram of U_{nat}.

Table 7.4c. Doses to individuals[a] and to population from airborne effluents from a model SX-F UF_6 plant — "low-impurity" feed[b]

BUILDING VENTILATION EFFLUENT

Airborne radwaste treatment case	Maximum annual individual doses at 0.5 mile (800 m)				Annual doses to population within 55 miles (88 km)	
	Total-body dose (mrem)	Adult organ doses (mrem)				
		Bone	Lung	Kidney	Total body (person-rem)	Bone (person-organ-rem)
			Midwestern site			
1	6.1E-1	5.9E00	3.6E00	1.4E00	6.2E-1	5.4E00
2	6.1E-1	5.9E00	3.6E00	1.4E00	6.2E-1	5.4E00
3	5.8E-2	6.6E-1	3.2E-1	1.5E-1	5.8E-2	5.7E-1
4	6.0E-4	5.9E-3	3.6E-3	1.4E-3	6.2E-4	5.3E-3
			New Mexico site			
1	8.4E-1	8.3E00	5.1E00	2.0E00	1.4E-2	1.3E-1
2	8.4E-1	8.3E00	5.1E00	2.0E00	1.4E-2	1.3E-1
3	8.1E-2	9.3E-1	4.6E-1	2.1E-1	1.3E-3	1.4E-2
4	8.4E-4	8.3E-3	5.1E-3	2.0E-3	1.6E-5	1.4E-4

[a] 50-yr dose commitment from exposure to effluents from one year's operation of the model plant. All food produced locally. Release height: 5 m.

[b] 10,000-metric ton/yr solvent extraction-fluorination plant; plant feed contains 2800 pCi of ^{230}Th and 200 pCi of ^{226}Ra per gram of U_{nat}.

Table 7.4d. Doses to individuals[a] and to population from airborne effluents from a model SX-F UF_6 plant — "low-impurity" feed[b]

RADWASTE DUST CONTROL

Airborne radwaste treatment case	Maximum annual individual doses at 0.5 mile (800 m)				Annual doses to population within 55 miles (88 km)	
	Total-body dose (mrem)	Adult organ doses (mrem)			Total body (person-rem)	Bone (person-organ-rem)
		Bone	Lung	Kidney		
			Midwestern site			
1			Not applicable			
2			Not applicable			
3	3.2E-2	7.8E-1	9.5E-2	1.5E-1	2.3E-2	5.6E-1
4	4.7E-6	8.3E-5	2.0E-5	1.7E-5	1.6E-5	3.5E-4
			New Mexico site			
1			Not applicable			
2			Not applicable			
3	4.5E-2	1.1E00	1.4E-1	2.2E-1	5.9E-4	1.6E-2
4	6.6E-6	1.2E-4	2.9E-5	2.4E-5	4.0E-7	1.0E-5

[a] 50-yr dose commitment from exposure to effluents from one year's operation of the model plant. All food produced locally. Release height: 5 m.

[b] 10,000-metric ton/yr solvent extraction-fluorination plant; plant feed contains 2800 pCi of ^{230}Th and 200 pCi of ^{226}Ra per gram of U_{nat}.

Table 7.4e. Doses[a] to individuals and to population from airborne effluents from a model SX-F UF_6 plant — "low-impurity" feed[b]

RADON-222 AS GASEOUS RELEASE[c]

Airborne radwaste treatment case	Maximum annual individual doses at 0.5 mile (800 m)				Annual doses to population within 55 miles (88 km)	
	Total-body dose (mrem)	Adult organ doses (mrem)			Total body (person-rem)	Bone (person-organ-rem)
		Bone	Lung	Kidney		
			Midwestern site			
1[d]	4.6E-3	2.5E-2	2.0E-1	5.9E-2	3.8E-3	1.9E-2
2[e]	6.2E-2	3.4E-1	2.7E00	8.0E-1	5.2E-2	2.5E-1
3[f]	1.3E-3	7.0E-3	5.6E-2	1.6E-2	1.1E-3	5.1E-3
4[f]	1.2E-3	6.4E-3	5.3E-2	1.5E-2	9.8E-4	4.8E-3
			New Mexico site			
1[d]	6.6E-3	3.6E-2	2.9E-1	8.5E-2	1.0E-4	5.5E-4
2[e]	6.8E-2	3.7E-1	3.0E00	8.9E-1	1.1E-3	5.8E-3
3[f]	1.8E-3	9.9E-3	8.0E-2	2.3E-2	2.8E-5	1.5E-4
4[f]	1.7E-3	9.2E-3	7.4E-2	2.1E-2	2.6E-5	1.4E-4

[a] 50-yr dose commitment from exposure to effluents from one year's operation of the model plant. All food produced locally. Release height: 5 m.

[b] 10,000-metric ton/yr solvent extraction-fluorination plant; plant feed contains 2800 pCi of ^{230}Th and 200 pCi of ^{226}Ra per gram of U_{nat}.

[c] Includes daughters ^{218}Po and ^{214}Pb from 7-min decay of ^{222}Rn gas after it leaves the plant.

[d] Includes radon from 30-yr accumulation of radwaste-sludges in a wet chemical pit.

[e] Includes radon from 15-yr accumulation of solid and liquid radwastes in lagoons.

[f] Radwaste to off-site burial.

Table 7.5. Annual doses[a] to the population[b] from airborne effluents from a model SX-F UF_6 plant — "low-impurity" feed[c]

Airborne radwaste treatment case	Population total-body dose (person-rem)	Population organ dose (person-organ-rem)									
		GI tract	Bone	Thyroid	Lung	Muscle	Kidney	Liver	Spleen	Testes	Ovaries
					Midwestern site						
1	3.2E00	3.1E00	2.6E+1	3.4E00	1.4E+1	2.9E00	6.5E00	2.7E00	2.4E00	3.1E00	2.1E00
2	1.0E00	1.0E00	2.5E00	1.1E00	8.6E00	9.6E-1	2.6E00	9.9E-1	1.0E00	1.0E00	6.9E-1
3	3.6E-1	3.6E-1	3.5E00	3.9E-1	1.6E00	3.3E-1	8.4E-1	3.2E-1	2.9E-1	3.5E-1	2.5E-1
4	1.7E-3	1.5E-3	1.1E-2	1.8E-3	8.3E-2	1.6E-3	1.3E-2	3.7E-3	6.1E-3	1.8E-3	1.2E-3
					New Mexico site						
1	7.0E-2	6.5E-2	6.2E-1	7.5E-2	4.2E-1	6.5E-2	1.6E-1	6.0E-2	5.5E-2	6.9E-2	4.8E-2
2	2.3E-2	2.2E-2	2.1E-1	2.5E-2	2.3E-1	2.1E-2	6.3E-2	2.3E-2	2.4E-2	2.3E-2	1.6E-2
3	8.0E-3	7.6E-3	8.8E-2	8.6E-3	4.7E-2	7.5E-3	2.1E-2	7.5E-3	6.6E-3	8.0E-3	5.8E-3
4	4.3E-5	3.8E-5	3.0E-4	4.4E-5	2.7E-3	4.0E-5	3.7E-4	1.1E-4	1.8E-4	4.5E-5	3.1E-5

[a] 50-yr dose commitment from exposure to effluents from one year's operation of the model plant. Release height: 5 m.

[b] Entire population within 55 miles (88 km) of the model plant; daily food intakes are 300 ml of milk, 0.25 kg of vegetables, and 0.3 kg of beef. All food is produced and consumed at the reference location.

[c] 10,000-metric ton/yr solvent extraction-fluorination plant; plant feed contains 2800 pCi of ^{230}Th and 200 pCi of ^{226}Ra per gram of U_{nat}.

Table 7.6. Exposure modes contributing to total-body dose from airborne effluents of a model SX-F UF_6 plant — "low-impurity" feed[a]

Terrestrial exposure mode	Maximum annual individual total-body dose[b] (mrem)	Percent of total-body dose
Submersion in air[c]	6.0E-4	0.2
Contaminated ground[c]	1.7E00	54.8
Inhalation[d]	8.7E-1	28.0
Ingestion[e]	5.3E-1	17.0

[a]10,000-metric ton/yr solvent extraction-fluorination plant; plant feed contains 2800 pCi of ^{230}Th and 200 pCi of ^{226}Ra per gram of U_{nat}.

[b]Case 1 at 0.5 mile (800 m) downwind from the plant; midwestern site.

[c]Exposure for 100% of the time; no shielding.

[d]Inhalation rate of 20 m^3 of air per day.

[e]All food is produced and consumed at the location of the dose calculation. Daily intakes are 1.0 liter of milk, 0.25 kg of vegetables, and 0.3 kg of beef.

Table 7.7. Major radionuclides contributing to doses from airborne effluents from a model SX-F UF_6 plant — "low-impurity" feed[a]

Radionuclide	Percent of total-body or organ dose[b]					
	Total body	GI tract	Bone	Thyroid	Lung	Kidney
^{226}Ra	1.6	<0.1	1.7	1.5	0.3	0.7
^{230}Th	4.8	0.1	18.9	4.4	3.5	16.5
^{234}Th	<0.1	9.5	0.1	<0.1	0.1	0.3
^{234}U	25.3	20.6	36.4	21.4	46.5	35.2
^{235}U	12.4	7.2	2.8	14.3	2.8	4.5
^{238}U	55.7	62.4	40.0	58.2	45.6	41.9
^{222}Rn (as gaseous release)[c]	0.2	0.1	0.1	0.2	1.2	0.9

[a]Solvent extraction-fluorination plant; plant feed contains 2800 pCi of ^{230}Th and 200 pCi of ^{226}Ra per gram of U_{nat}.

[b]Maximum 50-yr dose commitment to individual at 0.5 mile (800 m) from exposure to Case 1 effluents from one year's operation of the model plant at the midwestern site.

[c]Includes daughters ^{218}Po and ^{214}Pb from assuming 7-min decay of ^{222}Rn gas after it leaves the plant.

Table 7.8. Major radionuclides contributing to exposure modes for airborne effluents from a model SX-F UF_6 plant — "low-impurity" feed[a,b]

Radionuclide	Percent of total-body exposure mode[c]				Percent of organ exposure mode					
					Bone		Lung		Kidney	
	Submersion[d] in air	Contaminated[d] ground	Inhalation[e]	Ingestion[f]	Inhalation[e]	Ingestion[f]	Inhalation[e]	Ingestion[f]	Inhalation[e]	Ingestion[f]
^{226}Ra	<0.1	<0.1	<0.1	5.6	<0.1	3.4	<0.1	5.6	<0.1	1.5
^{230}Th	<0.1	0.1	27.0	0.3	45.8	0.7	3.9	0.3	42.6	0.9
^{234}Th	0.1	0.2	0.1	<0.1	0.2	<0.1	0.1	<0.1	0.7	<0.1
^{234}U	<0.1	8.6	38.1	49.5	27.7	49.5	49.8	49.5	28.6	51.4
^{235}U	0.1	21.9	0.8	1.1	0.6	1.1	1.1	1.1	0.7	1.2
^{238}U	<0.1	69.3	33.4	43.4	25.4	45.3	43.7	43.4	25.1	45.1
^{222}Rn (as gaseous release)[g]	99.8	0.1	0.5	<0.1	0.2	<0.1	1.3	<0.1	2.4	<0.1

[a]Solvent extraction-fluorination plant; plant feed contains 2800 pCi of ^{230}Th and 200 pCi of ^{226}Ra per gram of U_{nat}.

[b]Case 1 at 0.5 mile (800 m) downwind from the plant, midwestern site.

[c]Contributions of exposure modes to total-body dose given in Table 7.6.

[d]Exposure for 100% of the time; no shielding.

[e]Inhalation rate of 20 m^3 of air per day.

[f]All food is produced and consumed at the location of the dose calculation. Daily intakes are 1.0 liter of milk, 0.25 kg of vegetables, and 0.3 kg of beef.

[g]Includes daughters ^{218}Po and ^{214}Pb, assuming 7-min decay of ^{222}Rn gas after it leaves the plant.

Table 7.9. Maximum annual doses[a] to individuals[b] from airborne effluents from a model SX-F UF_6 plant — "low-impurity" feed[c] — assuming that none (0%) of the food is produced locally

Airborne radwaste treatment case	Individual total body dose (mrem)	Adult organ doses (mrem)									
		GI tract	Bone	Thyroid	Lung	Muscle	Kidney	Liver	Spleen	Testes	Ovaries
					Midwestern site						
1	2.2E00	8.5E-1	1.4E+1	2.4E00	1.8E+1	2.0E00	3.8E00	1.8E00	1.6E00	2.2E00	1.3E00
2	7.4E-1	3.1E-1	5.1E00	8.2E-1	8.2E00	6.7E-1	2.0E00	7.8E-1	8.8E-1	7.4E-1	4.4E-1
3	2.5E-1	8.8E-2	2.4E00	2.7E-1	2.0E00	2.3E-1	6.0E-1	2.3E-1	1.9E-1	2.5E-1	1.5E-1
4	1.7E-3	1.2E-3	1.0E-2	1.7E-3	5.6E-2	1.6E-3	1.6E-2	4.6E-3	7.9E-3	1.8E-3	1.2E-3
					New Mexico site						
1	3.0E00	1.2E00	2.0E+1	3.4E00	2.5E+1	2.7E00	5.3E00	2.5E00	2.2E00	3.0E00	1.8E00
2	1.0E00	4.2E-1	7.1E00	1.1E00	1.1E+1	9.2E-1	2.6E00	1.0E00	1.1E00	1.0E00	6.1E-1
3	3.5E-1	1.2E-1	3.4E00	3.8E-1	2.8E00	3.2E-1	8.6E-1	3.2E-1	2.7E-1	3.5E-1	2.2E-1
4	2.4E-3	1.6E-3	1.5E-2	2.5E-3	8.0E-2	2.2E-3	2.3E-2	6.5E-3	1.1E-2	2.5E-3	1.7E-3

[a] 50-yr dose commitment from exposure to effluents from one year's operation of the model plant.

[b] Maximum dose to individual at 0.5 mile (800 m) and downwind of the prevailing wind direction. Release height: 5 m.

[c] 10,000-metric ton/yr solvent extraction-fluorination plant; plant feed contains 2800 pCi of ^{230}Th and 200 pCi of ^{226}Ra per gram of U_{nat}.

Table 7.10a. Effect of food source on doses from a model SX-F UF_6 plant

Case 1 — "low-impurity" feed[a]

	Maximum annual individual doses (mrem/yr) per percent of food produced locally[b,c]				
	0	10	30	50	100
Midwestern site					
Total body	2.2	2.3	2.4	2.6	3.0
Bone	14.0	14.2	18.5	21.5	29.0
Lung	18.0	18.0	18.0	18.0	18.0
Kidney	3.8	4.1	4.8	5.4	7.0
New Mexico site					
Total body	3.0	3.1	3.4	3.6	4.2
Bone	20.0	22.0	26.0	30.0	40.0
Lung	25.0	25.1	25.3	25.5	26.0
Kidney	5.3	5.8	6.7	7.6	9.8

[a]Plant feed contains 2800 pCi of ^{230}Th and 200 pCi of ^{226}Ra per gram of U_{nat}.

[b]Maximum 50-yr dose commitment to individual at 0.5 mile (800 m) from exposure to airborne effluents from one year's operation of a model 10,000-metric ton/yr solvent extraction-fluorination plant. Release height: 5 m. The average dose is 47% of the maximum.

[c]Local food is produced 0.5 mile downwind of the plant in the prevailing wind direction. Other food is imported from outside the area.

Table 7.10b. Effect of food source on doses from a model SX-F UF_6 plant

Case 2 — "low-impurity" feed[a]

	Maximum annual individual doses (mrem/yr) per percent of food produced locally[b,c]				
	0	10	30	50	100
Midwestern site					
Total body	0.74	0.77	0.82	0.87	1.0
Bone	5.1	5.5	6.4	7.3	9.4
Lung	8.2	8.2	8.3	8.3	8.4
Kidney	2.0	2.1	2.3	2.5	3.0
New Mexico site					
Total body	1.0	1.0	1.1	1.2	1.4
Bone	7.1	7.7	8.9	10.1	13.0
Lung	11.0	11.0	11.0	11.0	11.0
Kidney	2.6	2.7	3.0	3.3	4.0

[a]Plant feed contains 2800 pCi of ^{230}Th and 200 pCi of ^{226}Ra per gram of U_{nat}.

[b]Maximum 50-yr dose commitment to individual at 0.5 mile (800 m) from exposure to airborne effluents from one-year's operation of a model 10,000-metric ton/yr solvent extraction-fluorination plant. Release height: 5 m. The average dose is 47% of the maximum.

[c]Local food is produced 0.5 mile downwind of the plant in the prevailing wind direction. Other food is imported from outside the area.

Table 7.10c. Effect of food source on doses from a model SX-F UF_6 plant

Case 3 — "low-impurity" feed[a]

	Maximum annual individual doses (mrem/yr) per percent of food produced locally[b,c]				
	0	10	30	50	100
Midwestern site					
Total body	0.25	0.26	0.28	0.31	0.36
Bone	2.4	2.6	2.9	3.3	4.1
Lung	2.0	2.0	2.0	2.1	2.1
Kidney	0.60	0.64	0.71	0.78	0.96
New Mexico site					
Total body	0.35	0.37	0.40	0.43	0.50
Bone	3.4	3.6	4.1	4.6	5.7
Lung	2.8	2.8	2.8	2.9	2.9
Kidney	0.86	0.90	0.99	1.1	1.3

[a]Plant feed contains 2800 pCi of ^{230}Th and 200 pCi of ^{226}Ra per gram of U_{nat}.

[b]Maximum 50-yr dose commitment to individual at 0.5 mile (800 m) from exposure to airborne effluents from one year's operation of a model 10,000-metric ton/yr solvent extraction-fluorination plant. Release height: 5 m. The average dose is 47% of the maximum.

[c]Local food is produced 0.5 mile downwind of the plant in the prevailing wind direction. Other food is imported from outside the area.

Table 7.10d. Effect of food source on doses from a model SX-F UF_6 plant

Case 4 — "low-impurity" feed[a]

	Maximum annual individual doses (mrem/yr) per percent of food produced locally[b,c]				
	0	10	30	50	100
Midwestern site					
Total body	0.0017	0.0017	0.0018	0.0018	0.0019
Bone	0.012	0.012	0.013	0.013	0.014
Lung	0.056	0.056	0.056	0.056	0.056
Kidney	0.016	0.016	0.016	0.017	0.017
New Mexico site					
Total body	0.0024	0.0024	0.0025	0.0026	0.0027
Bone	0.015	0.015	0.017	0.018	0.020
Lung	0.080	0.080	0.080	0.080	0.080
Kidney	0.023	0.023	0.023	0.024	0.024

[a]Plant feed contains 2800 pCi of ^{230}Th and 200 pCi of ^{226}Ra per gram of U_{nat}.

[b]Maximum 50-yr dose commitment to individual at 0.5 mile (800 m) from exposure to airborne effluents from one year's operation of a model 10,000-metric ton/yr solvent extraction-fluorination plant. Release height: 5 m. The average dose is 47% of the maximum.

[c]Local food is produced 0.5 mile downwind of the plant in the prevailing wind direction. Other food is imported from outside the area.

Table 7.11. Effect of release height on dose from a model SX-F UF_6 plant

Release height (m)	Fraction of total-body dose relative to that for a 5-m release height[a,b]	
	Midwestern site	New Mexico site
1	0.63	0.70
5	1.00	1.00
10	0.96	0.95
20	0.53	0.48
30	0.32	0.25

[a]Maximum 50-yr dose commitment to individual at 0.5 mile (800 m) from exposure to airborne effluents from one year's operation of the model plant.

[b]These fractions also apply approximately to organ doses.

Table 7.12. Reduction of dose as a function of distance from a model SX-F UF_6 plant

Distance miles (km)	Fraction of total-body dose relative to that at 0.5 mile (800 m)[a,b]	
	Midwestern site	New Mexico site
0.5[c] (0.8)	1.00	1.00
1.0 (1.6)	0.26	0.26
2.5 (4.0)	0.05	0.04
5.0 (8.0)	0.01	0.01

[a]Maximum 50-yr dose commitment to individual from exposure to airborne effluents from one year's operation of the model plant; 5-m release height.

[b]These fractions also apply approximately to organ doses.

[c]The site boundary is assumed to be 0.5 mile (800 m).

Table 7.13. Annual doses to individuals from liquid effluents from a model SX-F UF_6 plant - "low impurity" feed[a]

(Case 4 has no liquid radioactive releases.)

	Annual individual doses[b] (mrem)					
	Liquid Case 1		Liquid Case 2		Liquid Case 3	
Aquatic exposure mode	Total body	Bone	Total body	Bone	Total body	Bone
	15-cfs (0.4-m^3/sec) stream					
Submersion in water[c]	4.7E-5	5.4E-5	6.5E-10	7.8E-10	1.8E-4	2.0E-4
Ingestion of water[d]	6.1E-1	1.0E+1	1.2E-5	1.9E-4	5.3E-1	9.5E00
Eating fish[e]	3.3E-1	4.2E00	2.0E-6	3.4E-5	3.1E-1	3.7E00
Totals	9.4E-1	1.4E+1	1.4E-5	2.2E-4	8.4E-1	1.3E+1
	1300-cfs (37-m^3/sec) river					
Submersion in water[c]	4.9E-7	5.9E-7	6.5E-12	8.6E-12	1.8E-6	2.2E-6
Ingestion of water[d]	7.0E-3	1.0E-1	1.4E-7	2.3E-6	6.1E-3	8.8E-2
Eating fish[e]	3.8E-3	4.8E-2	2.5E-8	4.0E-7	3.6E-3	4.5E-2
Totals	1.1E-2	1.5E-1	1.7E-7	2.7E-6	9.7E-3	1.3E-1

[a] 10,000-metric ton/yr solvent extraction-fluorination plant; plant feed contains 2800 pCi of ^{230}Th and 200 pCi of ^{226}Ra per gram of U_{nat}.

[b] 50-yr dose commitment from 1-yr usage of the stream or river that receives the liquid effluents.

[c] Swimming in water, 1% of year.

[d] Daily intake of 1.2 liters of water.

[e] Daily intake of 20 g of fish.

Table 7.14. Percent of major radionuclides contributing to total-body exposure modes for liquid effluents from a model SX-F UF_6 plant - "low impurity" feed[a]

(Case 4 has no liquid radioactive releases.)

	Liquid Case 1			Liquid Case 2			Liquid Case 3		
Radionuclide	Drinking water[b]	Eating fish[c]	Swimming[d]	Drinking water[b]	Eating fish[c]	Swimming[d]	Drinking water[b]	Eating fish[c]	Swimming[d]
^{234}U	20.7	6.4	0.7	52.2	51.2	2.2	16.8	4.8	0.1
^{235}U	0.5	0.2	6.5	1.2	1.2	24.9	0.4	0.1	1.2
^{238}U	18.4	5.7	0.4	46.4	46.0	1.4	14.7	4.2	0.1
^{234m}Pa	<0.1	<0.1	45.8	<0.1	<0.1	35.8	<0.1	<0.1	49.2
^{234}Th	<0.1	<0.1	45.8	<0.1	<0.1	35.8	<0.1	<0.1	49.2
^{230}Th	8.6	7.9	0.4	0.5	1.4	<0.1	9.8	8.3	0.1
^{226}Ra	51.7	80.9	0.4	<0.1	0.1	<0.1	58.5	82.7	0.1

[a]Solvent extraction-fluorination plant; liquid released to 1300-cfs river; plant feed contains 2800 pCi of ^{230}Th and 200 pCi of ^{226}Ra per gram of U_{nat}.

[b]Daily intake of 1.2 liters of water.

[c]Daily intake of 20 g of fish.

[d]Swimming in water, 1% of year.

Table 7.15. Annual doses to aquatic biota from liquid effluents from a model SX-F UF_6 plant - "low impurity" feed[a]

(Case 4 has no liquid radioactive releases)

Liquid radwaste treatment case	Annual biota doses (mrem)			
	Algae	Invertebrates	Fish	Muskrat and/or waterfowl
	15-cfs (0.4-m^3/sec) stream			
1	1.4E+4	2.2E+3	1.8E+2	3.2E+3
2	2.6E-1	5.1E-2	5.0E-3	7.3E-4
3	1.4E+4	2.4E+3	1.9E+2	3.2E+3
	1300-cfs (37-m^3/sec) river			
1	1.8E+2	2.7E+1	2.2E00	4.0E+1
2	3.3E-3	6.3E-4	6.2E-5	9.2E-6
3	1.7E+2	3.0E+1	2.4E00	4.0E+1

[a]10,000-metric ton/yr solvent extraction—fluorination plant; plant feed contains 2800 pCi of ^{230}Th and 200 pCi of ^{226}Ra per gram of U_{nat}.

Table 7.16. Percent of major radionuclides contributing to aquatic doses from liquid effluents from a model SX-F UF_6 plant — "low-impurity" feed[a,b]

Radionuclide	Percent of total dose			
	Plants	Invertebrates	Fish	Muskrat or waterfowl
^{226}Ra	5.6	3.6	8.9	99.5
^{230}Th	20.7	44.6	32.0	0.1
^{234}Th	2.9	6.0	4.4	<0.1
^{234m}Pa	2.6	1.7	2.0	<0.1
^{234}U	35.1	22.7	27.1	0.2
^{235}U	0.9	0.6	0.7	<0.1
^{238}U	32.2	20.8	24.9	0.2

[a]Liquid Case 1.

[b]Solvent extraction—fluorination plant; plant feed contains 2800 pCi of ^{230}Th and 200 pCi of ^{226}Ra per gram of U_{nat}.

Table 7.17. Long-lived radionuclides dispersed via terrestrial pathways during the 30-yr life of a model SX-F UF_6 plant — Case 1, "low-impurity" feed[a,b]

Radionuclide	Total airborne release during 30-yr plant life (Ci)	Terrestrial activity concentration[c] (Ci/m^2)
^{226}Ra	8.37E-4	3.40E-14
^{230}Th	2.89E-2	1.17E-12
^{234}U	4.35E00	1.77E-10
^{235}U	1.06E-1	4.31E-12
^{238}U	4.35E00	1.77E-10

[a]10,000-metric ton/yr solvent extraction-fluorination plant; plant feed contains 2800 pCi of ^{230}Th and 200 pCi of ^{226}Ra per gram of U_{nat}.

[b]Aquatic releases not included.

[c]Activity dispersed uniformly over an area of 2.461E+10 m^2 [i.e., dispersed within a 55-mile (88-km) radius of the plant].

Table 7.18. Annual doses[a,b] to average individual after the model SX-F UF_6 plant[c] closes until significant decay of radionuclides occurs — Case 1, "low-impurity" feed

Radionuclide	Individual total-body doses (mrem) per exposure mode				Adult organ doses (mrem) per exposure mode					
					Bone		Lung		Kidney	
	Contaminated ground	Inhalation	Ingestion	Total	Inhalation	Ingestion	Inhalation	Ingestion	Inhalation	Ingestion
^{226}Ra	3.2E-10	1.0E-8	1.9E-8	2.9E-8	1.0E-7	1.9E-7	3.0E-8	1.9E-8	1.0E-8	1.9E-8
^{230}Th	7.2E-9	1.2E-6	1.1E-7	1.3E-6	4.5E-5	3.9E-6	5.5E-6	1.1E-7	9.6E-6	1.1E-6
^{234}U	8.5E-5	1.7E-6	9.2E-6	9.6E-5	2.7E-5	1.5E-4	7.0E-5	9.2E-6	6.5E-6	3.5E-5
^{235}U	1.2E-4	3.8E-8	2.1E-7	1.2E-4	6.4E-7	3.5E-6	1.6E-6	2.1E-7	1.5E-7	8.1E-7
^{238}U	5.6E-5	1.5E-6	8.1E-6	6.6E-5	2.5E-5	1.4E-4	6.1E-5	8.1E-6	5.7E-6	3.1E-5
Total	2.6E-4	4.4E-6	1.8E-5	2.8E-4	9.9E-5	3.0E-4	1.4E-4	1.8E-5	2.2E-5	6.8E-5

[a]Dose after plant closes from radioactive materials which were dispersed in the terrestrial environment during 30-year operation of a model 10,000-metric ton/yr solvent extraction-fluorination UF_6 plant, assuming a uniform distribution of the radioactive dusts within a 55-mile (88-km) radius from the plant.

[b]In addition to these doses, there will be a long-term radon dose to individuals living near the repository where the solvent extraction sludges are buried.

[c]10,000-metric ton/yr solvent extraction-fluorination plant; plant feed contains 2800 pCi of ^{230}Th and 200 pCi of ^{226}Ra per gram of U_{nat}.

Table 7.19. Annual doses[a,b] to the population[c] after the model SX-F UF_6 plant[d] closes until significant decay of radionuclides occurs — Case 1, midwestern site,[e] "low-impurity" feed[f]

Radionuclide	Population total-body dose (person-rem)	Population organ doses (person-organ-rem)		
		Bone	Lung	Kidney
^{226}Ra	1.0E-4	1.0E-3	1.8E-4	1.0E-4
^{230}Th	4.6E-3	1.7E-1	2.0E-2	3.8E-2
^{234}U	3.4E-1	9.9E-1	4.1E-1	2.5E-1
^{235}U	4.3E-1	6.9E-1	4.0E-1	3.2E-1
^{238}U	2.3E-1	7.8E-1	3.1E-1	1.7E-1
Total	1.0E00	2.6E00	1.1E00	7.8E-1

[a]Dose, after plant closes, from radioactive materials which were dispersed in the terrestrial environment during 30-yr operation of a model 10,000-metric ton/yr solvent extraction—fluorination UF_6 plant, assuming uniform distribution of the radioactive dusts within a 55-mile (88-km) radius of the plant.

[b]In addition to these doses, there will be a long-term radon dose to the population living near the repository where the solvent extraction sludges are buried.

[c]Entire population within 55 miles (88 km) of the model plant.

[d]10,000-metric ton/yr solvent extraction—fluorination plant.

[e]Population total-body dose for New Mexico site is about 2% of dose at midwestern site.

[f]Plant feed contains 2800 pCi of ^{230}Th and 200 pCi of ^{226}Ra per gram of U_{nat}.

Table 7.20. Maximum annual doses[a] to individuals[b,c] from airborne effluents from a model SX-F UF_6 plant — "high-impurity" feed[d] — assuming that 100% of the food is produced locally

Airborne radwaste treatment case	Individual total body dose (mrem)	Adult organ doses (mrem)									
		GI tract	Bone	Thyroid	Lung	Muscle	Kidney	Liver	Spleen	Testes	Ovaries
					Midwestern site						
1	4.0E00	2.9E00	5.3E+1	4.2E00	2.3E+1	3.8E00	1.2E+1	4.1E00	3.6E00	4.0E00	3.1E00
2	1.8E00	1.3E00	2.1E+1	1.9E00	2.8E+1	1.7E00	1.0E+1	3.0E00	4.2E00	1.8E00	1.4E00
3	7.1E-1	3.5E-1	1.2E+1	7.4E-1	3.4E00	6.9E-1	2.6E00	8.2E-1	7.0E-1	7.1E-1	6.1E-1
4	4.7E-2	3.6E-2	2.8E-1	4.8E-2	1.1E00	4.4E-2	5.4E-1	8.1E-2	5.1E-2	5.3E-2	3.1E-2
					New Mexico site						
1	5.6E00	4.1E00	7.5E+1	5.9E00	3.3E+1	5.3E00	1.8E+1	5.7E00	5.0E00	5.6E00	4.3E00
2	2.4E00	1.7E00	2.9E+1	2.5E00	3.4E+1	2.2E00	1.3E+1	3.8E00	5.1E00	2.4E00	1.8E00
3	1.0E00	4.8E-1	1.7E+1	1.0E00	4.8E00	9.7E-1	3.6E00	1.2E00	9.8E-1	1.0E00	8.6E-1
4	6.7E-2	5.0E-2	4.0E-1	6.7E-2	1.6E00	6.2E-2	7.8E-1	1.1E-1	7.2E-2	7.5E-1	4.4E-1

[a] 50-yr dose commitment from exposure to effluents from one year's operation of the model plant.

[b] Maximum dose to individual at 0.5 mile (800 m) and downwind of the prevailing wind direction. Release height: 5 m. Average dose is 47% of the maximum.

[c] All food is produced and consumed at the location of the dose calculation. Daily intakes are 1.0 liter of milk, 0.25 kg of vegetables, and 0.3 kg of beef.

[d] 10,000-metric ton/yr solvent extraction-fluorination plant; plant feed contains 14,200 pCi of ^{230}Th and 1600 pCi of ^{226}Ra per gram of U_{nat}.

Table 7.21. Maximum annual doses[a] to individuals[b] from airborne effluents from a model SX-F UF_6 plant — "high-impurity" feed[c] — assuming that none (0%) of the food is produced locally.

Airborne radwaste treatment case	Individual total body dose (mrem)	Adult organ doses (mrem)									
		GI tract	Bone	Thyroid	Lung	Muscle	Kidney	Liver	Spleen	Testes	Ovaries
					Midwestern site						
1	2.8E00	8.8E-1	3.6E+1	3.0E00	2.2E+1	2.6E00	8.8E00	2.8E00	2.3E00	2.8E00	1.9E00
2	1.4E00	6.6E-1	1.5E+1	1.5E00	2.8E+1	1.3E00	9.1E00	2.6E00	3.8E00	1.4E00	9.8E-1
3	4.2E-1	9.6E-2	8.5E00	4.5E-1	3.1E00	4.0E-1	2.0E00	5.3E-1	4.1E-1	4.2E-1	3.3E-1
4	4.7E-2	3.5E-2	2.7E-1	4.7E-2	1.1E00	4.3E-2	5.3E-1	7.9E-2	5.0E-2	5.2E-2	3.1E-2
					New Mexico site						
1	3.9E00	1.2E00	5.1E+1	4.2E00	3.1E+1	3.6E00	1.2E+1	4.0E00	3.3E00	3.9E00	2.6E00
2	1.8E00	8.1E-1	2.1E+1	1.9E00	3.3E+1	1.7E00	1.1E+1	3.2E00	4.5E00	1.8E00	1.3E00
3	6.0E-1	1.3E-1	1.2E+1	6.3E-1	4.4E00	5.7E-1	2.9E00	7.5E-1	5.8E-1	6.0E-1	4.6E-1
4	6.6E-2	4.9E-2	3.9E-1	6.6E-2	1.6E00	6.1E-1	7.6E-1	1.1E-1	7.1E-2	7.4E-2	4.3E-2

[a] 50-yr dose commitment from exposure to effluents from one year's operation of the model plant.

[b] Maximum dose to individual at 0.5 mile (800 m) and downwind of the prevailing wind direction. Release height: 5 m.

[c] 10,000-metric ton/yr solvent extraction-fluorination plant; plant feed contains 14,200 pCi of ^{230}Th and 1600 pCi of ^{226}Ra per gram of U_{nat}.

Table 7.22. Annual doses[a] to the population[b] from airborne effluents from a model SX-F UF_6 plant — "high-impurity" feed[c]

Airborne radwaste treatment case	Population total-body dose (person-rems)	Population organ dose (person-organ-rem)									
		GI tract	Bone	Thyroid	Lung	Muscle	Kidney	Liver	Spleen	Testes	Ovaries
					Midwestern site						
1	3.8E00	3.2E00	4.4E+1	4.1E00	1.9E+1	3.6E00	1.1E+1	3.7E00	3.2E00	3.8E00	2.8E00
2	1.6E00	1.3E00	1.7E+1	1.7E00	3.8E+1	1.5E00	7.9E00	2.4E00	3.3E00	1.7E00	1.2E00
3	6.1E-1	3.8E-1	9.2E00	6.3E-1	2.9E00	5.8E-1	2.0E00	6.6E-1	5.7E-1	6.0E-1	4.9E-1
4	4.2E-2	3.1E-2	2.2E-1	4.3E-2	1.1E00	3.9E-2	3.9E-1	6.4E-2	4.4E-2	4.8E-2	2.6E-2
					New Mexico site						
1	8.8E-2	6.6E-2	1.2E00	9.4E-2	5.5E-1	8.3E-2	2.7E-1	8.9E-2	7.8E-2	8.9E-2	6.6E-2
2	3.7E-2	2.8E-2	4.4E-1	3.9E-2	9.9E-1	3.5E-2	2.0E-1	5.8E-2	7.8E-2	3.8E-2	2.8E-2
3	1.4E-2	7.9E-3	2.5E-1	1.5E-2	8.5E-2	1.4E-2	5.5E-2	1.7E-2	1.4E-2	1.4E-2	1.2E-2
4	1.1E-3	8.0E-4	6.2E-3	1.1E-3	3.5E-2	9.9E-4	1.2E-2	1.8E-3	1.1E-3	1.2E-3	7.0E-4

[a]50-yr dose commitment from exposure to effluents from one year's operation of the model plant. Release height: 5 m.

[b]Entire population within 55 miles (88 km) of the model plant; daily food intakes are 300 ml of milk, 0.25 kg of vegetables, and 0.3 kg of beef. All food is produced and consumed at the reference location.

[c]10,000-metric ton/yr solvent extraction-fluorination plant; plant feed contains 14,200 pCi of ^{230}Th and 1600 pCi of ^{226}Ra per gram of U_{nat}.

Table 7.23. Annual doses to individuals from liquid effluents from a model SX-F UF_6 plant - "high impurity" feed[a]

(Case 4 has no liquid radioactive releases)

	Annual individual doses[b] (mrem)					
	Liquid Case 1		Liquid Case 2		Liquid Case 3	
Aquatic exposure mode	Total body	Bone	Total body	Bone	Total body	Bone
			15-cfs (0.4-m^3/sec) stream			
Submersion in water[c]	4.8E-5	5.5E-5	6.5E-10	7.8E-10	1.8E-4	2.0E-4
Ingestion of water[d]	9.6E-1	2.8E+1	1.2E-5	2.1E-4	9.2E-1	2.7E+1
Eating fish[e]	5.8E-1	8.8E00	2.1E-6	3.8E-5	5.7E-1	8.6E00
Total	1.5E00	3.7E+1	1.4E-5	2.5E-4	1.5E00	3.6E+1
			1300-cfs (37-m^3/sec) river			
Submersion in water[c]	5.0E-7	6.1E-7	6.7E-12	8.8E-12	1.8E-6	2.3E-6
Ingestion of water[d]	1.1E-2	2.2E-1	1.5E-7	2.5E-6	1.1E-2	2.0E-1
Eating fish[e]	6.7E-3	1.0E-1	2.5E-8	4.6E-7	6.5E-3	1.1E-1
Total	1.8E-2	3.2E-1	1.8E-7	3.0E-6	1.8E-2	3.1E-1

[a]10,000-metric ton/yr solvent extraction-fluorination plant; plant feed contains 14,200 pCi of ^{230}Th and 1600 pCi of ^{226}Ra per gram of U_{nat}.

[b]50-yr dose commitment from 1-yr usage of the stream or river that receives the liquid effluents.

[c]Swimming in water, 1% of year.

[d]Daily intake of 1.2 liters of water.

[e]Daily intake of 20 g of fish.

Table 8.1. Total annual cost increase for reduction of the environmental impact of the model 10,000-metric ton/yr SX-F UF_6 production plant--"low-impurity" feed[a,b]

MIDWESTERN SITE

	Case 1	Case 2	Case 3	Case 4
Annual cost increase over base, $	Base	7.12E+5[c]	2.62E+6	3.36E+6[d]
Environmental impact				
Maximum annual individual dose at 0.5 mile (800 m) from airborne effluents, mrem[e]				
Total body	3.0E00	1.0E00	3.6E-1	1.9E-3
Bone	2.8E+1	9.4E00	4.0E00	1.4E-2
Lung	1.8E+1	8.4E00	2.0E00	5.7E-2
Kidney	7.0E00	3.0E00	9.6E-1	1.7E-2
Annual total population dose out to 55 miles (88 km) from airborne effluents, person-rem[e]				
Total body	3.2E00	1.0E00	3.6E-1	1.7E-3
Bone	2.6E+1	2.5E00	3.5E00	1.1E-2
Lung	1.4E+1	8.6E00	1.6E00	8.3E-2
Kidney	6.5E00	2.6E00	8.4E-1	1.3E-2
Annual individual dose from liquid effluents, mrem				
15-cfs (0.4-m^3/sec) stream				
Total body	9.4E-1	1.4E-5	8.4E-1	-
Bone	1.4E+1	2.2E-4	1.3E+1	-
1300-cfs (37-m^3/sec) river				
Total body	1.1E-2	1.7E-7	9.7E-3	-
Bone	1.5E-1	2.7E-6	1.3E-1	-
Chemical releases, kg/day[f]				
Gaseous effluents				
HF	2.4E+1	4.2E-1	4.2E-1	2.9E-1
NO_2	2.6E+2	2.6E+2	8.7E+2	5.8E+2
Hexane	4.4E+2	4.4E+2	4.4E+2	4.4E+2
SO_2	2.7E+1	2.7E+1	2.7E+1	2.7E+1
NH_3	-	4.6E+2	6.8E+2	-
Liquid effluents				
NO_3^-	1.4E+4	-	7.8E00	3.0E00
NH_4^+	1.1E+3	-	4.5E-1	-
F^-	2.7E+1	1.8E00	1.8E00	1.4E00
Ca^{2+}	2.0E+3	1.9E00	1.9E00	1.4E00
Na^+	1.0E+3	-	1.0E+3	-
K^+	1.4E+3	3.2E+1	1.3E+2	-
SO_4^{2-}	2.4E+2	5.0E+1	2.9E+2	-
HCO_3^{2-}	-	-	2.6E+3	-
Solid waste generated, MT/yr[g]				
Containing 10^{-1} to 10^{-2} μCi of ^{230}Th/g and only slightly soluble	1.2E+3	4.3E+2	1.2E+3	4.6E+3
Containing <10^{-5} μCi of ^{230}Th/g and only slightly soluble	5.2E+2	6.0E+2	6.0E+2	9.4E+2
Containing <10^{-5} μCi of ^{230}Th/g but soluble	-	-	-	1.3E+2

[a]Mid-1973 dollars.

[b]Plant feed contains 2800 pCi of ^{230}Th and 200 pCi of ^{226}Ra per gram of U_{nat}.

[c]Does not include the cost of final disposal of the liquid nitrate waste.

[d]Does not include cost to the mill of changing the plant feed.

[e]Five-meter release height; 100% local food.

[f]Process effluents only; does not include combustion products from heating the plant or operating vehicles, or sanitary and laundry wastes.

[g]Long-term hazard defined by ^{230}Th parent since ^{226}Ra will gradually grow to secular equilibrium with ^{230}Th.

Table 8.2. Total annual cost increase for reduction of the environmental impact of the model 10,000-metric ton/yr SX-F UF_6 production plant--"low-impurity" feed[a,b]

NEW MEXICO SITE

	Case 1	Case 2	Case 3	Case 4
Annual cost increase over base, $	Base	5.91E+5[c]	2.62E+6	3.36E+6[d]
Environmental impact				
Maximum annual individual dose at 0.5 mile (800 m) from airborne effluents, mrem[e]				
Total body	4.2E00	1.4E00	5.0E-1	2.7E-3
Bone	3.9E+1	1.3E+1	5.7E00	1.9E-2
Lung	2.6E+1	1.1E+1	3.0E00	8.0E-2
Kidney	9.7E00	4.0E00	1.3E00	2.4E-2
Annual total population dose out to 55 miles (88 km) from airborne effluents, person-rem[e]				
Total body	7.2E-2	2.3E-2	8.0E-3	4.3E-5
Bone	6.2E-1	2.1E-1	8.8E-2	3.0E-4
Lung	4.2E-1	2.3E-1	4.7E-2	2.7E-3
Kidney	1.6E-1	6.3E-2	2.1E-2	3.7E-4
Annual individual dose from liquid effluents, mrem				
15-cfs (0.4-m^3/sec) stream				
Total body	9.4E-1	1.4E-5	8.4E-1	-
Bone	1.4E+1	2.2E-4	1.3E+1	-
1300-cfs (37-m^3/sec) river				
Total body	1.1E-2	1.7E-7	9.7E-3	-
Bone	1.5E-1	2.7E-6	1.3E-1	-
Chemical releases, kg/day[f]				
Gaseous effluents				
HF	2.4E+1	4.2E-1	4.2E-1	2.9E-1
NO_2	2.6E+2	2.6E+2	8.7E+2	5.8E+2
Hexane	4.4E+2	4.4E+2	4.4E+2	4.4E+2
SO_2	2.7E+1	2.7E+1	2.7E+1	2.7E+1
NH_3	-	4.6E+2	6.8E+2	-
Liquid effluents				
NO_3^-	1.4E+4	-	7.8E00	3.0E00
NH_4^+	1.1E+3	-	4.5E-1	-
F^-	2.7E+1	1.8E00	1.8E00	1.4E00
Ca^{2+}	2.0E+3	1.9E00	1.9E00	1.4E00
Na^+	1.0E+3	-	1.0E+3	-
K^+	1.4E+3	3.2E+1	1.3E+2	-
SO_4^{2-}	2.4E+2	5.0E+1	2.9E+2	-
HCO_3^-	-	-	2.6E+3	-
Solid waste generated, MT/yr[g]				
Containing 10^{-1} to 10^{-2} μCi of ^{230}Th/g and only slightly soluble	1.2E+3	4.3E+2	1.2E+3	4.6E+3
Containing $<10^{-5}$ μCi of ^{230}Th/g and only slightly soluble	5.2E+2	6.0E+2	6.0E+2	9.4E+2
Containing $<10^{-5}$ μCi of ^{230}Th/g but soluble	-	-	-	1.3E+2

[a]Mid-1973 dollars.

[b]Plant feed contains 2800 pCi of ^{230}Th and 200 pCi of ^{226}Ra per gram of U_{nat}.

[c]Does not include the cost of final disposal of the liquid nitrate waste.

[d]Does not include cost to the mill of changing the plant feed.

[e]Five-meter release height: 100% local food.

[f]Process effluents only; does not include combustion products from heating the plant or operating vehicles, or sanitary and laundry wastes.

[g]Long-term hazard defined by ^{230}Th parent since ^{226}Ra will gradually grow to secular equilibrium with ^{230}Th.

Table 8.3. Annual cost for reduction of dose from airborne effluents at the model 10,000-metric ton/yr SX-F UF_6 plant--"low-impurity" feed

COMBINED AIRBORNE EFFLUENTS

Case No.	Total annual cost increase over base ($1000)[a]	Maximum annual individual dose at 0.5 mile (mrem)[b]				Annual total population dose out to 55 miles (person-rem)[b]			
		Total body	Bone	Lung	Kidney	Total body	Bone	Lung	Kidney
				Midwestern site					
1	Base	3.0E00	2.8E+1	1.8E+1	7.0E00	3.2E00	2.6E+1	1.4E+1	6.5E00
2	255	1.0E00	9.4E00	8.4E00	3.0E00	1.0E00	2.5E00	8.6E00	2.6E00
3	617[c]	3.6E-1	4.0E00	2.0E00	9.6E-1	3.6E-1	3.5E00	1.6E00	8.4E-1
4	1461[d]	1.9E-3	1.4E-2	5.7E-2	1.7E-2	1.7E-3	1.1E-2	8.3E-2	1.3E-2
				New Mexico site					
1	Base	4.2E00	3.9E+1	2.6E+1	9.7E00	7.2E-2	6.2E-1	4.2E-1	1.6E-1
2	255	1.4E00	1.3E+1	1.1E+1	4.0E00	2.3E-2	2.1E-1	2.3E-1	6.3E-2
3	617[c]	5.0E-1	5.7E00	3.0E00	1.3E00	8.0E-3	8.8E-2	4.7E-2	2.1E-2
4	1461[d]	2.7E-3	1.9E-2	8.0E-2	2.4E-2	4.3E-5	3.0E-4	2.7E-3	3.7E-4

[a]Mid-1973 dollars.

[b]Five-meter release height; 100% local food; plant feed contains 2800 pCi of ^{230}Th and 200 pCi of ^{226}Ra per gram of U_{nat}.

[c]Costs do not include the primary bag filters on the radwaste dryer and drumming, the primary bag filter on the yellow cake feed calciner (used to reduce the ammonium content in the liquid waste), or the bag filters on the lime recovery system; these are considered to be a part of the liquid and solid waste treatment systems. However, costs do include the secondary bag filters on radwaste drying and drumming ($120,000) and an additional $17,300 for a larger secondary bag filter to collect uranium oxide dusts because of the feed calciner.

[d]Costs do not include the dust collectors for the magnesia recovery system; these costs are considered to be part of the liquid nitrate waste treatment system.

Table 8.3a. Annual cost for reduction of dose from airborne effluents at the model 10,000-metric ton/yr SX-F UF_6 plant--"low-impurity" feed

PROCESS DUST CONTROL EFFLUENT[a]

Case No.	Total annual cost increase over base ($1000)[b]	Maximum annual individual dose at 0.5 mile (mrem)[c]				Annual total population dose out to 55 miles (person-rem)[c]	
		Total body	Bone	Lung	Kidney	Total body	Bone
			Midwestern site				
1	Base	1.5E00	1.5E+1	9.0E00	3.6E00	1.6E00	1.3E+1
2	198	2.1E-1	2.1E00	1.3E00	5.0E-1	2.1E-1	1.9E00
3	216[d]	2.6E-1[e]	2.5E00[e]	1.5E00[e]	6.2E-1[e]	2.7E-1[e]	2.3E00[e]
4	274	1.1E-4	1.1E-3	6.4E-4	2.6E-4	1.1E-4	9.5E-4
			New Mexico site				
1	Base	2.1E00	2.1E+1	1.3E+1	5.0E00	3.5E-2	3.3E-1
2	198	2.9E-1	2.9E00	1.8E00	7.1E-1	4.8E-3	4.6E-2
3	216[d]	3.6E-1[e]	3.6E00[e]	2.2E00[e]	8.6E-1[e]	5.9E-3[e]	5.6E-2[e]
4	274	1.5E-4	1.5E-3	9.1E-4	3.6E-4	2.5E-6	2.3E-5

[a]Process only; does not include dusts generated by the liquid waste treatment systems such as the Case 3 radwaste drying and drumming, the Case 3 lime recovery system, or the Case 4 magnesia recovery system.

[b]Mid-1973 dollars.

[c]Five-meter release height; 100% local food; plant feed contains 2800 pCi of ^{230}Th and 200 pCi of ^{226}Ra per gram of U_{nat}.

[d]Includes an additional $17,300 for a larger secondary bag filter to collect oxide dusts because of the yellow cake feed calciner (used to reduce the ammonium content of the liquid waste).

[e]Includes dust from yellow cake feed calciner.

Table 8.3b. Annual cost for reduction of dose from airborne effluents at the model 10,000-metric ton/yr SX-F UF_6 plant--"low-impurity" feed

PROCESS OFF-GAS

Case No.	Total annual cost increase over base ($1000)[a]	Maximum annual individual dose at 0.5 mile (mrem)[b]				Annual total population dose out to 55 miles (person-rem)[b]	
		Total body	Bone	Lung	Kidney	Total body	Bone
			Midwestern site				
1	Base	9.2E-1	7.4E00	5.6E00	1.9E00	9.7E-1	7.1E00
2	57	1.4E-1	1.1E00	8.5E-1	2.8E-1	1.5E-1	1.1E00
3	68	9.4E-3	8.4E-2	5.7E-2	2.1E-2	1.4E-2	7.8E-2
4	190	4.2E-6	3.8E-5	2.5E-5	9.2E-6	4.4E-6	3.5E-5
			New Mexico site				
1	Base	1.3E00	1.0E+1	8.0E00	2.6E00	2.1E-2	1.6E-1
2	57	1.9E-1	1.5E00	1.2E00	3.9E-1	3.2E-3	2.4E-2
3	68	1.3E-2	1.2E-1	8.1E-2	2.9E-2	2.2E-4	1.9E-3
4	190	5.9E-6	5.3E-5	3.6E-5	1.3E-5	9.6E-8	8.3E-7

[a]Mid-1973 dollars.

[b]Five-meter release height; 100% local food; plant feed contains 2800 pCi of ^{230}Th and 200 pCi of ^{226}Ra per gram of U_{nat}.

Table 8.3c. Annual cost for reduction of dose from airborne effluents at the model 10,000-metric ton/yr SX-F UF_6 plant--"low-impurity" feed

BUILDING VENTILATION EFFLUENT

Case No.	Total annual cost increase over base ($1000)[a]	Maximum annual individual dose at 0.5 mile (mrem)[b]				Annual total population dose out to 55 miles (person-rem)[b]	
		Total body	Bone	Lung	Kidney	Total body	Bone
			Midwestern site				
1	Base	6.1E-1	5.9E00	3.6E00	1.4E00	6.2E-1	5.4E00
2	Base	6.1E-1	5.9E00	3.6E00	1.4E00	6.2E-1	5.4E00
3	212	5.8E-2	6.6E-1	3.2E-1	1.5E-1	5.8E-2	5.7E-1
4	997	6.0E-4	5.9E-3	3.6E-3	1.4E-1	6.2E-4	5.3E-3
			New Mexico site				
1	Base	8.4E-1	8.3E00	5.1E00	2.0E00	1.4E-2	1.3E-1
2	Base	8.4E-1	8.3E00	5.1E00	2.0E00	1.4E-2	1.3E-1
3	212	8.1E-2	9.3E-1	4.6E-1	2.1E-1	1.3E-3	1.4E-2
4	997	8.4E-4	8.3E-3	5.1E-3	2.0E-3	1.6E-5	1.4E-4

[a]Mid-1973 dollars.

[b]Five-meter release height; 100% local food; plant feed contains 2800 pCi of ^{230}Th and 200 pCi of ^{226}Ra per gram of U_{nat}.

Table 8.4a. Incremental cost increase - dose reduction between case studies at the model 10,000-metric ton/yr SX-F UF_6 plant--"low-impurity" feed[a]

PROCESS DUST CONTROL EFFLUENT[b]

Case increment	Increase in annual cost ($1000)	Decrease in maximum annual individual dose at 0.5 mile (mrem)		Decrease in annual dose to population out to 55 miles (person-rem)		Cost/benefit: Individual at 0.5 mile ($1000/mrem)		Cost/benefit: Total population within 55 miles ($1000/person-rem)	
		Total body	Bone	Total body	Bone	Total body	Bone	Total body	Bone
Midwestern site									
1/2	198	1.3E00	1.3E+1	1.4E+1	1.1E+1	1.5E+2	1.5E+1	1.4E+2	1.8E+1
(Case 3 is not directly comparable)									
2/4	76	2.1E-1	2.1E00	2.1E-1	1.9E00	3.6E+2	3.6E+1	3.6E+2	4.0E+1
New Mexico site									
1/2	198	1.8E00	1.8E+1	3.0E-2	2.8E-1	1.1E+2	1.1E+1	6.6E+3	6.1E+2
(Case 3 is not directly comparable)									
2/4	76	2.9E-1	2.9E00	4.8E-3	4.6E-2	2.6E+2	2.6E+1	1.6E+4	1.6E+3

[a]1973 dollars; 5-m release height; 100% local food; plant feed contains 2800 pCi of ^{230}Th and 200 pCi of ^{226}Ra per gram of U_{nat}.

[b]Process only; does not include dusts generated by liquid waste treatment systems.

Table 8.4b. Incremental cost increase - dose reduction between case studies at the model 10,000-metric ton/yr SX-F UF_6 plant--"low-impurity" feed[a]

PROCESS OFF-GAS

Case increment	Increase in annual cost ($1000)	Decrease in maximum annual individual dose at 0.5 mile (mrem)		Decrease in annual dose to population out to 55 miles (person-rem)		Cost/benefit: Individual at 0.5 mile ($1000/mrem)		Cost/benefit: Total population within 55 miles ($1000/person-rem)	
		Total body	Bone	Total body	Bone	Total body	Bone	Total body	Bone
				Midwestern site					
1/2	56.8	7.8E-1	6.3E00	8.2E-1	6.0E00	7.3E+1	9.0E00	6.9E+1	9.5E00
2/3	11.6	1.3E-1	1.0E00	1.4E-1	1.0E00	5.2E+2	1.2E+1	8.5E+1	1.2E+1
3/4	121.1	9.4E-3	8.4E-2	1.4E-2	7.8E-2	1.3E+4	1.4E+3	8.6E+3	1.6E+3
				New Mexico site					
1/2	56.8	1.1E00	8.5E00	1.8E-2	1.4E-1	5.1E+1	1.4E00	3.2E+3	4.2E+2
2/3	11.6	1.8E-1	1.4E00	3.0E-3	2.2E-2	6.6E+1	8.4E00	3.9E+3	5.2E+2
3/4	121.1	1.3E-2	1.2E-1	2.2E-4	1.9E-3	9.3E+3	1.1E+3	5.5E+5	6.4E+4

[a]1973 dollars; 5-m release height; 100% local food; plant feed contains 2800 pCi of ^{230}Th and 200 pCi of ^{226}Ra per gram of U_{nat}.

Table 8.4c. Incremental cost increase - dose reduction between case studies at the model 10,000-metric ton/yr SX-F UF_6 plant--"low-impurity" feed[a]

BUILDING VENTILATION EFFLUENT

Case increment	Increase in annual cost ($1000)	Decrease in maximum annual individual dose at 0.5 mile (mrem)		Decrease in annual dose to population out to 55 miles (person-rem)		Cost/benefit: Individual at 0.5 mile ($1000/mrem)		Cost/benefit: Total population within 55 miles ($1000/person-rem)	
		Total body	Bone	Total body	Bone	Total body	Bone	Total body	Bone
Midwestern site									
1/2	-	-	-	-	-	-	-	-	-
2/3	212	5.5E-1	5.2E00	5.6E-1	4.8E00	3.8E+2	4.0E+1	3.8E+2	4.4E+1
3/4	785	5.7E-2	6.5E-1	5.7E-2	5.6E-1	1.4E+4	1.2E+3	1.4E+4	1.4E+3
New Mexico site									
1/2	-	-	-	-	-	-	-	-	-
2/3	212	7.6E-1	7.4E00	1.3E-2	1.2E-1	2.8E+2	2.9E+1	1.7E+4	1.8E+3
3/4	785	8.0E-2	9.2E-1	1.3E-3	1.4E-2	9.8E+3	8.5E+2	6.1E+5	5.6E+4

[a]1973 dollars; 5-m release height; 100% local food; plant feed contains 2800 pCi of ^{230}Th and 200 pCi of ^{226}Ra per gram of U_{nat}.

Table 8.5. Costs and effectiveness of treating liquid wastes and associated solids at the model 10,000-metric ton/yr SX-F UF_6 plant--"low-impurity" feed[a]

	Total annual cost increase over base ($1000)[b]	Annual individual dose from 1300-cfs (37-m^3/sec) river (mrem)		Chemicals released (kg/day)				
		Total body	Bone	NO_3^-	NH_4^+	$NaHCO_3$	F^-	Total (including other chemicals listed in Table 4.10)
Case 1								
Liquid nitrate-radwaste treatment	Base	9.7E-3	1.3E-1	1.41E+4	1.1E+3			1.8E+4
Solid radwaste impounded	Base							
Fluoride scrubber waste treatment	Base[c]	1.3E-3	0.2E-1				2.7E+1	0.13E+4
Total	Base	1.1E-2	1.5E-1	1.41E+4	1.1E+3		2.7E+1	1.99E+4
Case 2								
Liquid nitrate-radwaste treatment and impoundment	304[d,e]	f	f	f	f			-
Solid radwaste impounded	Base							
Fluoride scrubber waste treatment	152	1.7E-7	2.7E-6				1.8E00	8.4E+1
Total	456	1.7E-7[f]	2.7E-7[f]	f	f		1.8E00	8.6E+1[f]
Case 3								
Liquid nitrate-radwaste treatment system for biological denitrification other than drying and drumming solid radwaste	1533	9.7E-3	1.3E-1	7.8E00	4.5E-1	3.7E+3		4.03E+3
Drying and drumming radwaste solids	315[g]							
Fluoride scrubber waste treatment	152	1.7E-7	2.7E-6				1.8E00	0.08E+3
Total	2000	9.7E-3	1.3E-1	7.8E00	4.5E-1	3.7E+3	1.8E00	4.11E+3
Case 4								
Liquid nitrate-radwaste treatment system for thermal denitration and nitric acid recovery other than cementing and drumming solid radwaste	1049 + 550[h]	-	-	3.0E00	-			3.0E00
Cementing and drumming radwaste solids	741[i]							
Fluoride scrubber waste treatment	111 + 120[j]	-	-				1.4E00	2.8E00
Total	1901 + 670[h,j]	-	-	3.0E00	-		1.4E00	5.8E00

[a]Plant feed contains 2800 pCi of ^{230}Th and 200 pCi of ^{226}Ra.

[b]Mid-1973 dollars.

[c]Base case is a "free" source of calcium ions and a lined settling basin to impound the CaF_2.

[d]Does not include cost of final disposal of liquid nitrate waste.

[e]Cost at New Mexico site is $183,000.

[f]Potential for accidental release from nitrate impoundment via dike failure or seepage if the integrity of the liner should fail.

[g]Includes primary bag filters, but not secondary bag filters ($120,000) for dryer and drumming station. Cost of secondary bag filters is included with airborne treatment in Table 8.3.

[h]Estimated additional annual cost to alkaline leach mill operators of producing low-sodium yellow cake feed; this cost is not included in the summary tables.

[i]Annual cost of drying and drumming Case 4 solid radwaste is $273,000 with primary bag filters or $374,000 with primary and secondary bag filters.

[j]Annual cost increase of better condensers on the process off-gas, which reduce the fluoride load to waste treatment; in summary tables this is included in the process off-gas treatment.

Table 8.6. Total annual cost increase for reduction of the environmental impact of the model 10,000-metric ton/yr SX-F UF_6 production plant--"high-impurity" feed[a,b]

MIDWESTERN SITE

	Case 1	Case 2	Case 3	Case 4
Annual cost increase over base	Base	$7.12E+5[c]	$2.62E+6	$3.36E+6[d]
Environmental impact				
Maximum annual individual dose at 0.5 mile (800 m) from airborne effluents, mrem[e]				
Total body	4.0E00	1.8E00	7.1E-1	4.7E-2
Bone	5.3E+1	2.1E+1	1.2E+1	2.8E-1
Lung	2.3E+1	2.8E+1	3.4E00	1.1E00
Kidney	1.2E+1	1.0E+1	2.6E00	5.4E-1
Annual total population dose out to 55 miles (88 km) from airborne effluents, person-rem[e]				
Total body	3.8E00	1.6E00	6.1E-1	4.2E-2
Bone	4.4E+1	1.7E+1	9.2E00	2.2E-1
Lung	1.9E+1	3.8E+1	2.9E00	1.1E00
Kidney	1.1E+1	7.9E00	2.0E00	3.9E-1
Annual individual dose from liquid effluents, mrem				
15-cfs (0.4-m^3/sec) stream				
Total body	1.5E00	1.4E-5	1.5E00	-
Bone	3.7E+1	2.5E-4	3.6E+1	-
1300-cfs (37-m^3/sec) river				
Total body	1.8E-2	1.8E-7	1.8E-2	-
Bone	3.2E-1	3.0E-6	3.1E-1	-
Chemical releases, kg/day[f]				
Gaseous effluents				
HF	2.4E+1	4.2E-1	4.2E-1	2.9E-1
NO_2	2.6E+2	2.6E+2	8.7E+2	5.8E+2
Hexane	4.4E+2	4.4E+2	4.4E+2	4.4E+2
SO_2	2.7E+1	2.7E+1	2.7E+1	2.7E+1
NH_3	-	4.6E+2	6.8E+2	-
Liquid effluents				
NO_3^-	1.4E+4	-	7.8E00	3.0E00
NH_4^+	1.1E+3	-	4.5E-1	-
F^-	2.7E+1	1.8E00	1.8E00	1.4E00
Ca^{2+}	2.0E+3	1.9E00	1.9E00	1.4E00
Na^+	1.0E+3	-	1.0E+3	-
K^+	1.4E+3	3.2E+1	1.3E+2	-
SO_4^{2-}	2.4E+2	5.0E+1	2.9E+2	-
HCO_3^-	-	-	2.6E+3	-
Solid waste generated, MT/yr[g]				
Containing 10^{-1} to 10^{-2} μCi of ^{230}Th/g and only slightly soluble	1.3E+3	4.3E+2	1.3E+3	4.6E+3
Containing $<10^{-4}$ μCi of ^{230}Th/g and only slightly soluble	5.2E+2	6.0E+2	6.0E+2	9.4E+2
Containing $<10^{-5}$ μCi of ^{230}Th/g but soluble	-	-	-	1.3E+2

[a]Mid-1973 dollars.

[b]Plant feed contains 14,200 pCi of ^{230}Th and 1600 pCi of ^{226}Ra per gram of U_{nat}.

[c]Does not include the cost of final disposal of the liquid nitrate waste.

[d]Does not include cost to the mill of changing the plant feed.

[e]Five-meter release height; 100% local food.

[f]Process effluents only; does not include combustion products from heating the plant or operating vehicles, or sanitary and laundry wastes.

[g]Long-term hazard defined by ^{230}Th parent since ^{226}Ra will gradually grow to secular equilibrium with ^{230}Th.

Table 8.7. Total annual cost increase for reduction of the environmental impact of the model 10,000-metric ton/yr SX-F UF_6 production plant--"high-impurity" feed[a,b]

NEW MEXICO SITE

	Case 1	Case 2	Case 3	Case 4
Annual cost increase over base	Base	$5.91E+5[c]	$2.62E+6	$3.36E+6[d]
Environmental impact				
Maximum annual individual dose at 0.5 mile (800 m) from airborne effluents, mrem[e]				
Total body	5.6E00	2.4E00	1.0E00	6.7E-2
Bone	7.5E+1	2.9E+1	1.7E+1	4.0E-1
Lung	3.3E+1	3.4E+1	4.8E00	1.6E00
Kidney	1.8E+1	1.3E+1	3.6E00	7.8E-1
Annual total population dose out to 55 miles (88 km) from airborne effluents, person-rem[e]				
Total body	8.8E-2	3.7E-2	1.4E-2	1.1E-3
Bone	1.2E00	4.4E-1	2.5E-1	6.2E-3
Lung	5.5E-1	9.9E-1	8.5E-2	3.5E-2
Kidney	2.7E-1	2.0E-1	5.5E-2	1.2E-2
Annual individual dose from liquid effluents, mrem				
15-cfs (0.4-m^3/sec) stream				
Total body	1.5E00	1.4E-5	1.5E00	-
Bone	3.7E+1	2.5E-4	3.6E+1	-
1300-cfs (37-m^3/sec) river				
Total body	1.8E-2	1.8E-7	1.8E-2	-
Bone	3.2E-1	3.0E-6	3.1E-1	-
Chemical releases, kg/day[f]				
Gaseous effluents				
HF	2.4E+1	4.2E-1	4.2E-1	2.9E-1
NO_2	2.6E+2	2.6E+2	8.7E+2	5.8E+2
Hexane	4.4E+2	4.4E+2	4.4E+2	4.4E+2
SO_2	2.7E+1	2.7E+1	2.7E+1	2.7E+1
NH_3	-	4.6E+2	6.8E+2	-
Liquid effluents				
NO_3^-	1.4E+4	-	7.8E00	3.0E00
NH_4^+	1.1E+3	-	4.5E-1	-
F^-	2.7E+1	1.8E00	1.8E00	1.4E00
Ca^{2+}	2.0E+3	1.9E00	1.9E00	1.4E00
Na^+	1.0E+3	-	1.0E+3	-
K^+	1.4E+3	3.2E+1	1.3E+2	-
SO_4^{2-}	2.4E+3	5.0E+1	2.9E+2	-
HCO_3^-	-	-	2.6E+3	-
Solid waste generated, MT/yr[g]				
Containing 10^{-1} to 10^{-2} μCi of ^{230}Th/g and only slightly soluble	1.3E+3	4.3E+2	1.3E-3	4.6E+3
Containing $<10^{-4}$ μCi of ^{230}Th/g and only slightly soluble	5.2E+2	6.0E+2	6.0E+2	9.4E+2
Containing $<10^{-5}$ μCi of ^{230}Th/g but soluble	-	-	-	1.3E+2

[a]Mid-1973 dollars.

[b]Plant feed contains 14,200 pCi of ^{230}Th and 1600 pCi of ^{226}Ra per gram of U_{nat}.

[c]Does not include the cost of final disposal of the liquid nitrate waste.

[d]Does not include cost to the mill of changing the plant feed.

[e]Five-meter release height; 100% local food.

[f]Process effluents only; does not include combustion products from heating the plant or operating vehicles, or sanitary and laundry wastes.

[g]Long-term hazard defined by ^{230}Th parent since ^{226}Ra will gradually grow to secular equilibrium with ^{230}Th.

10.0 FIGURES

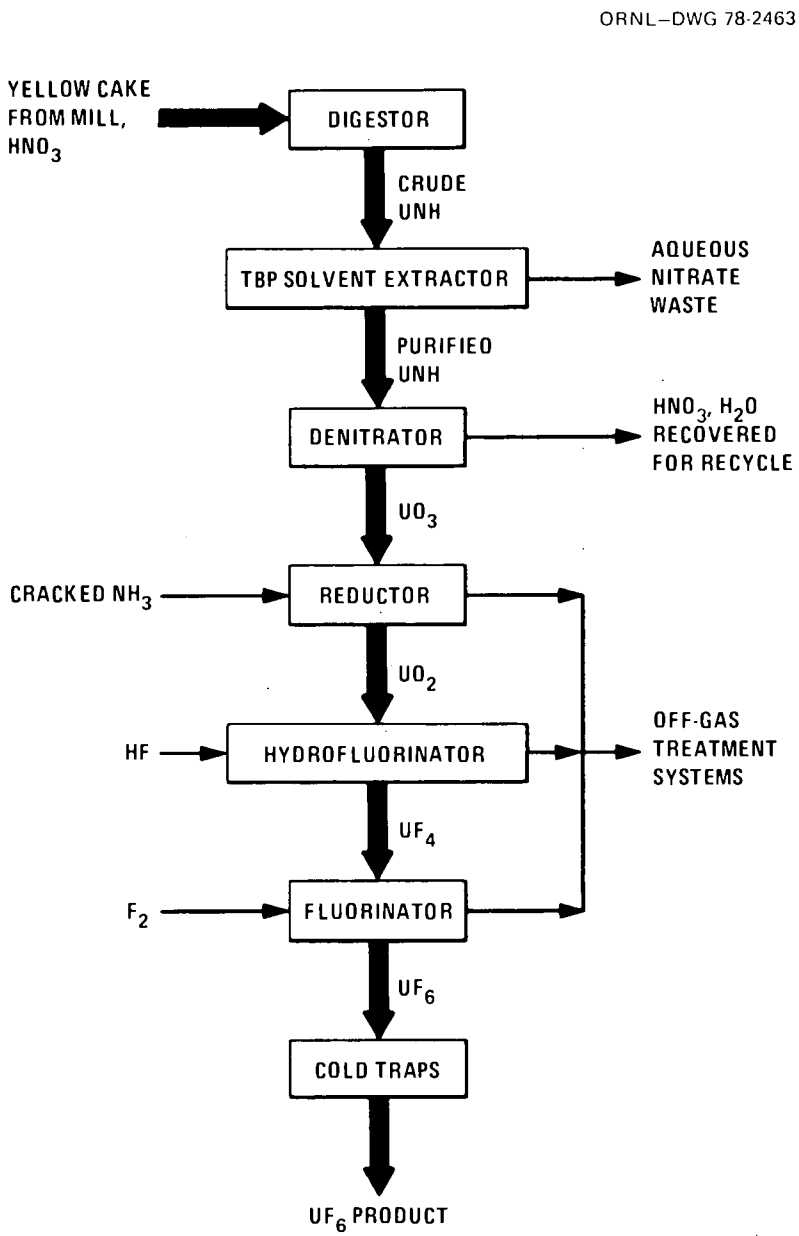

Fig. 4.1. Simplified flow diagram for the SX-F process.

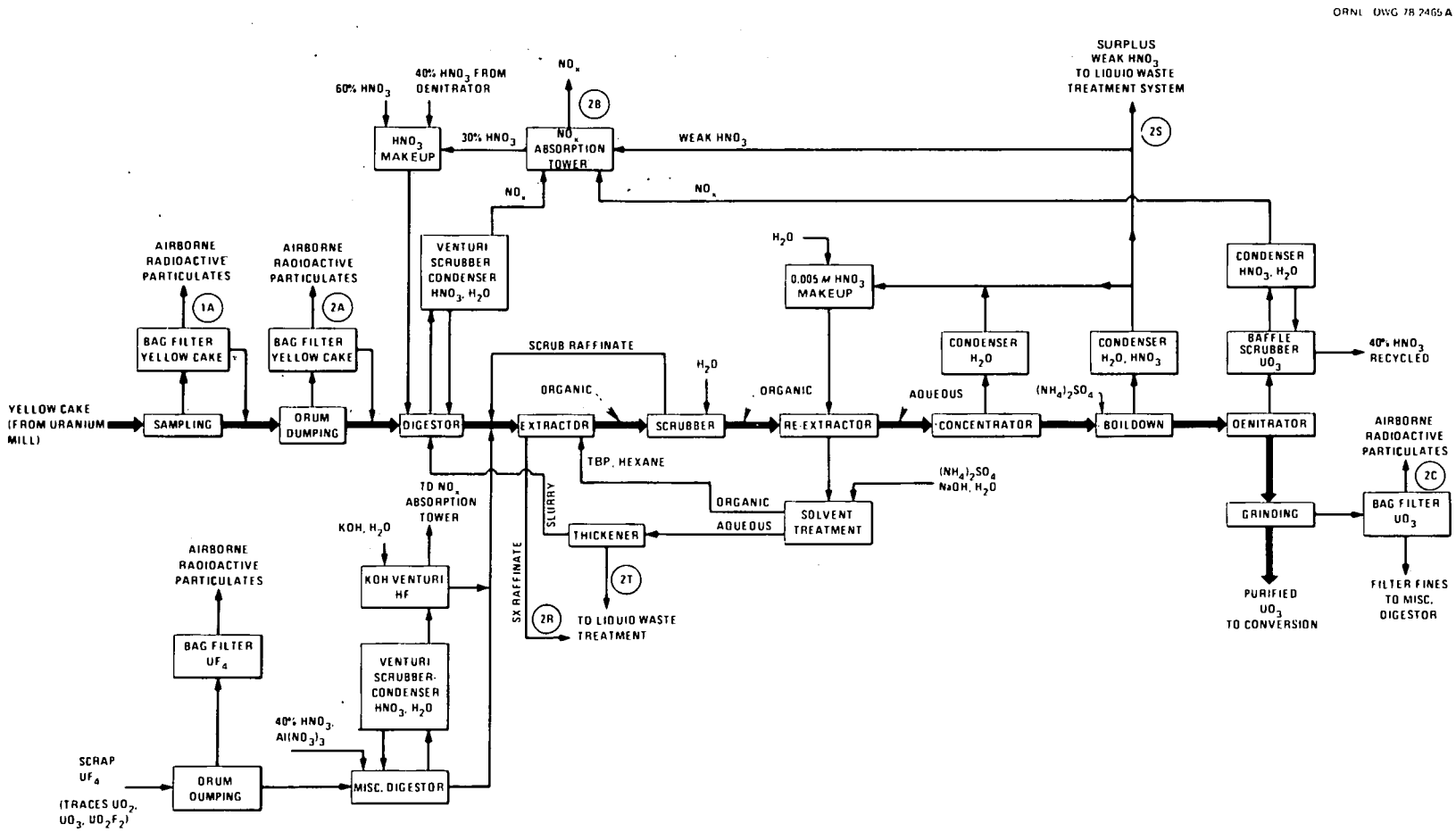

Fig. 4.2. Uranium refining system for the model SX-F UF_6 plant showing Case 1 off-gas treatment.

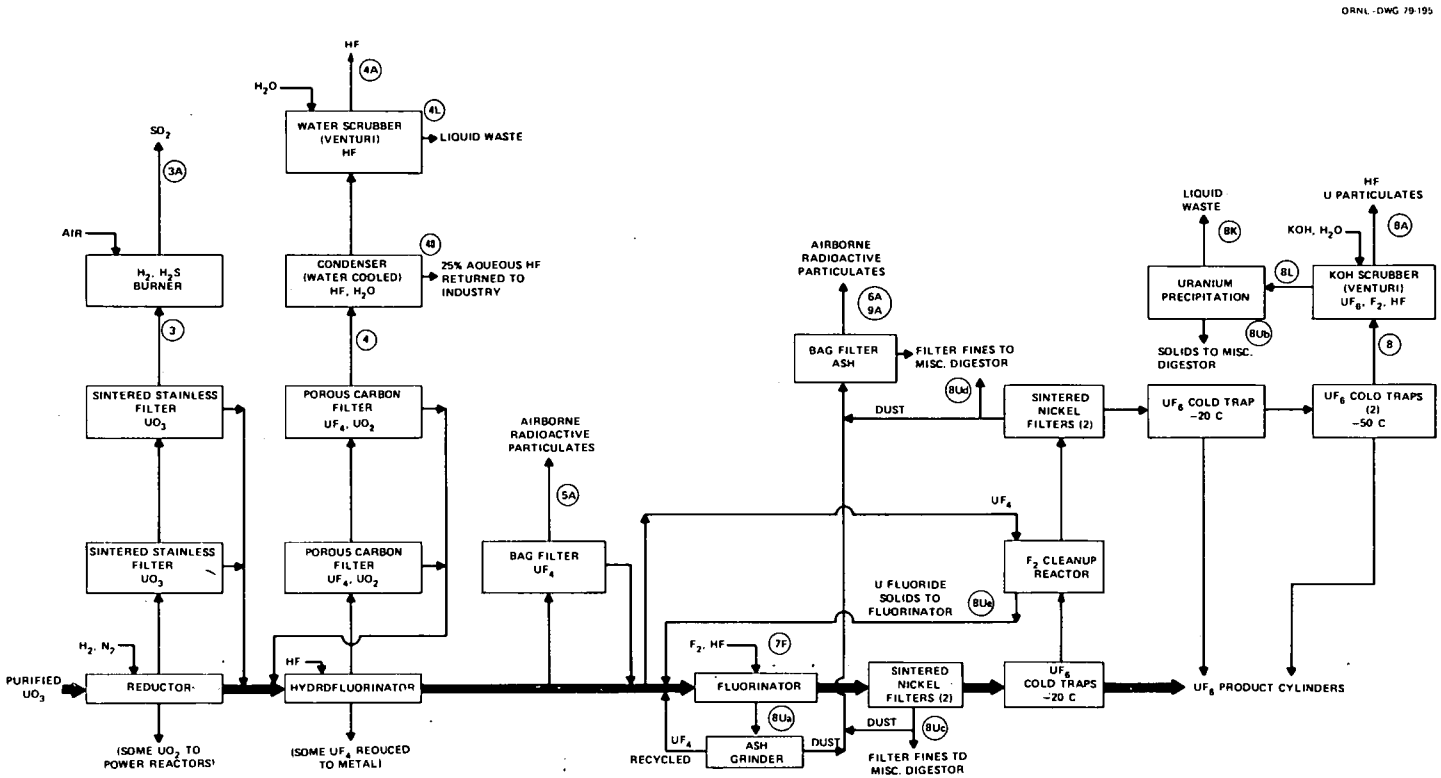

Fig. 4.3. Conversion of UO_3 to UF_4 systems for the model SX-F UF_6 plant showing Case 1 off-gas treatment.

ORNL-DWG 78-2466

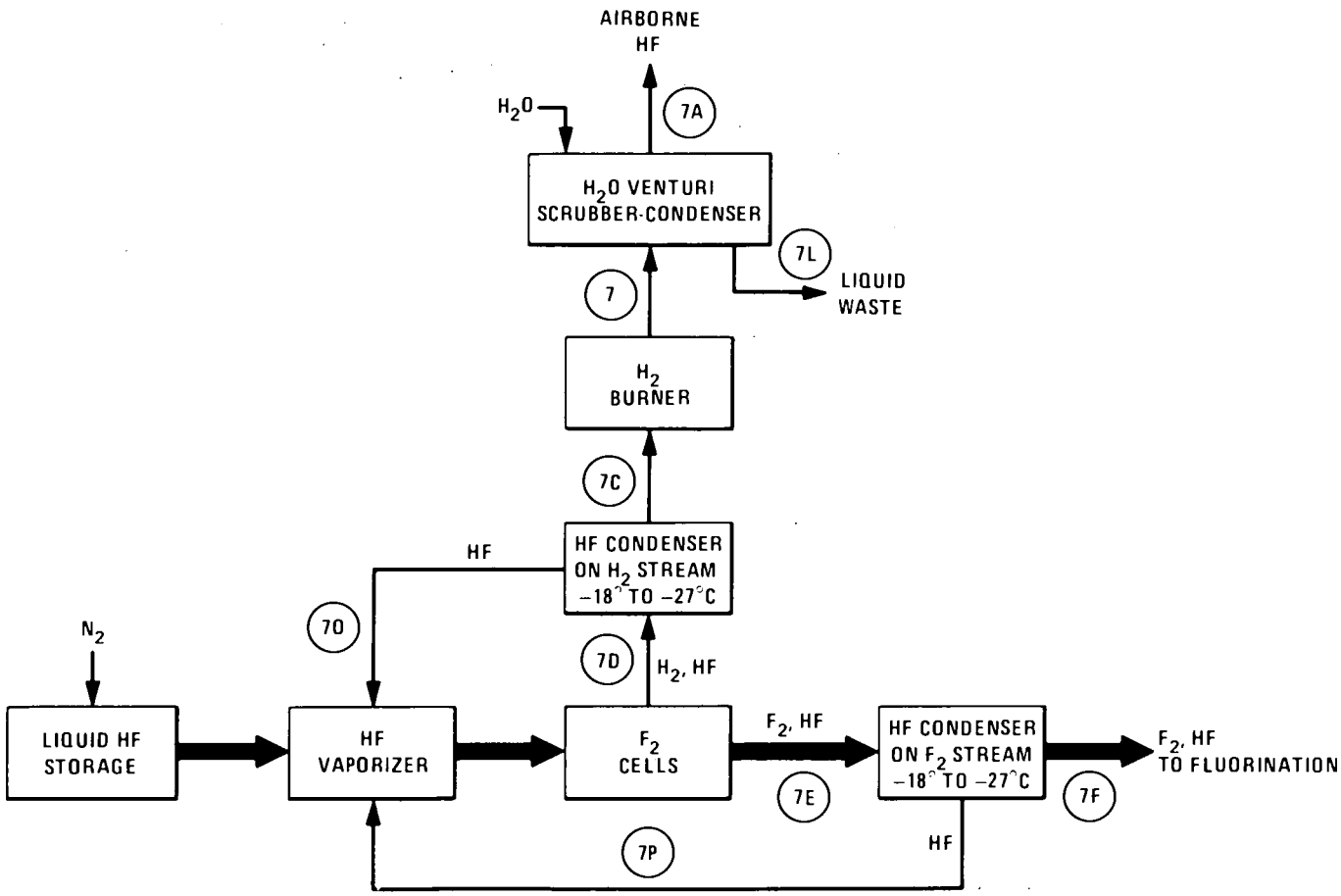

Fig. 4.4. Fluorine production system for the model UF_6 plant showing Case 1 hydrogen off-gas treatment.

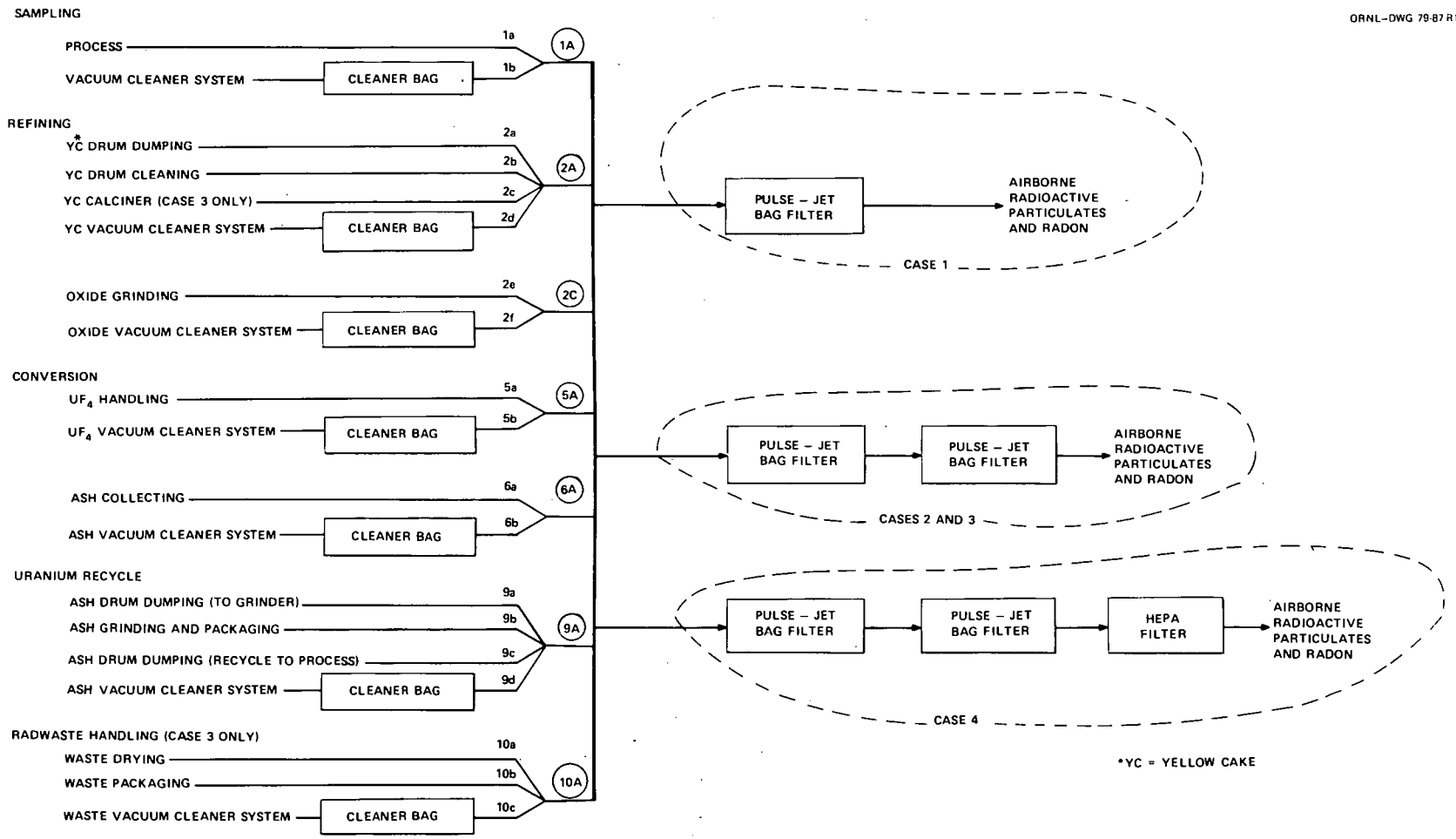

Fig. 4.5. Process and radwaste dust control effluent treatment systems for the model SX-F UF_6 plant — Cases 1-4.

ORNL-DWG 78-2467

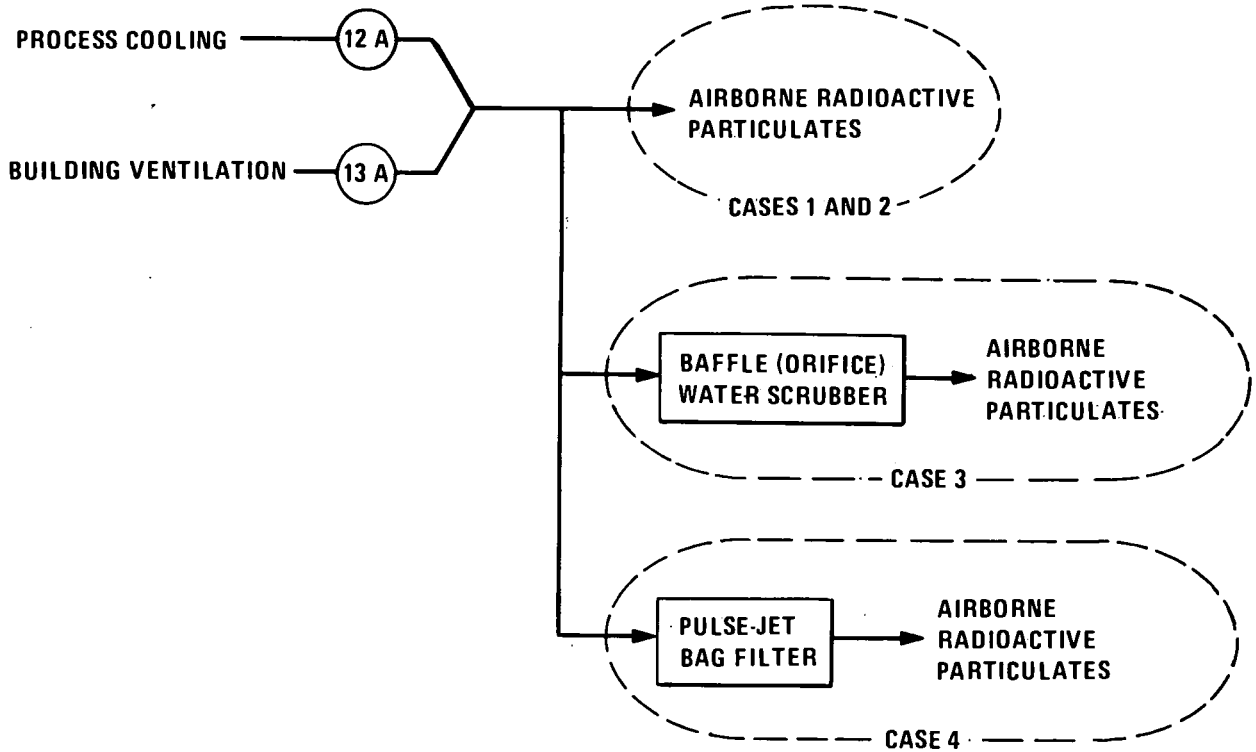

Fig. 4.6. Building ventilation effluent treatment systems for the model SX-F UF_6 plant — Cases 1-4.

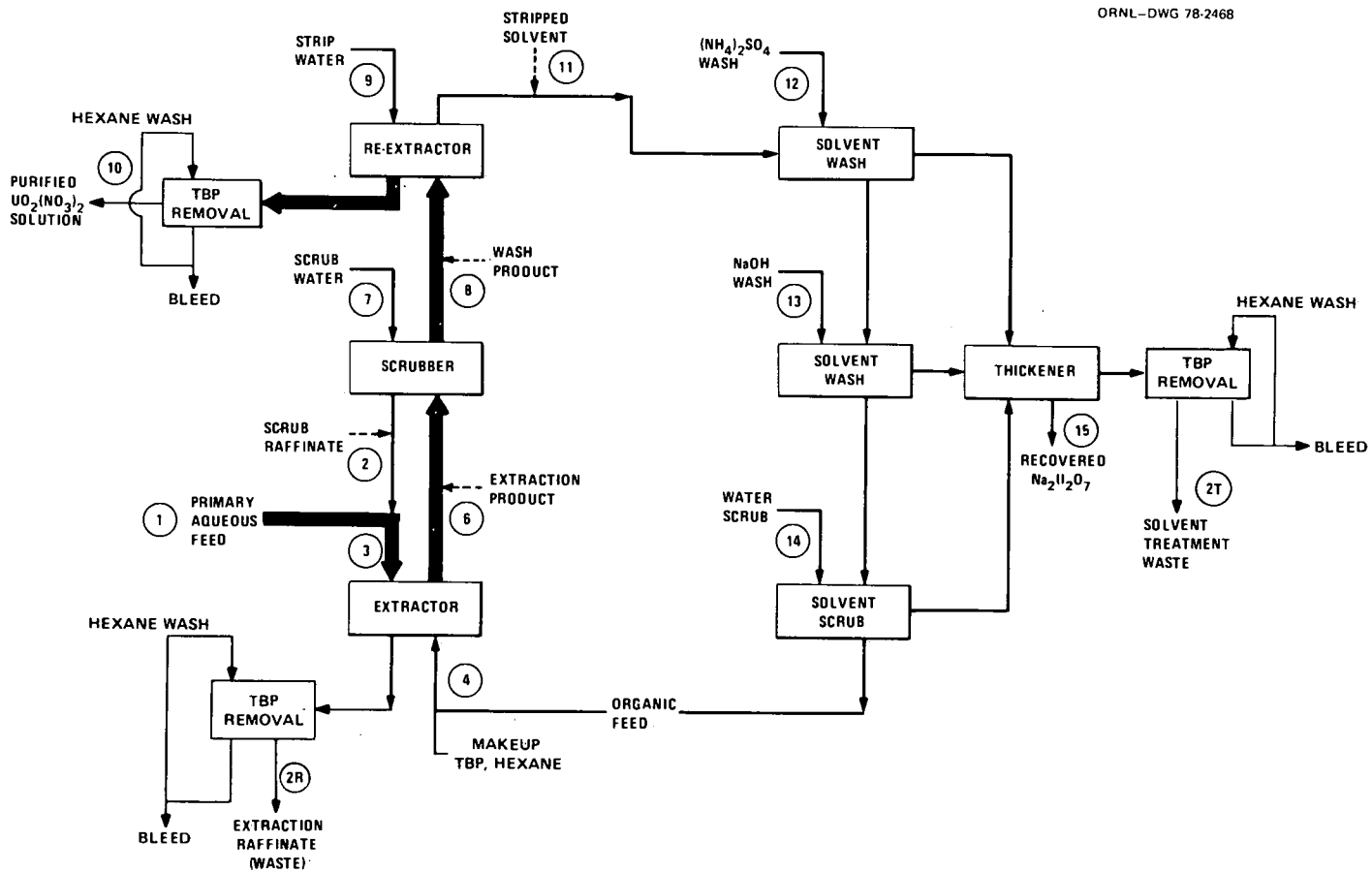

Fig. 4.7. Model solvent extraction and solvent treatment systems showing codes for Table 4.16.

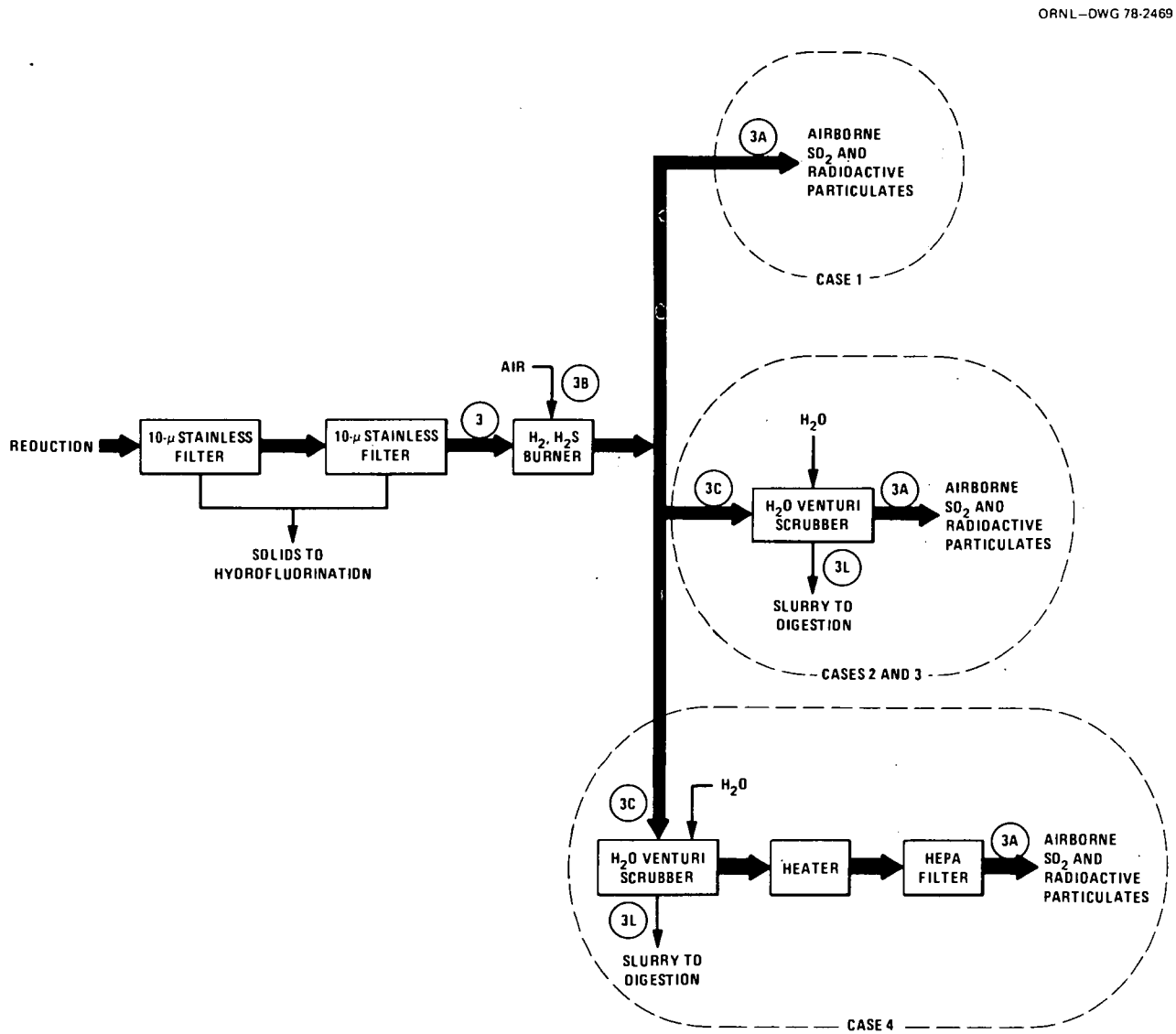

Fig. 4.8. Reduction off-gas treatment systems for the model SX-F UF_6 plant — Cases 1-4.

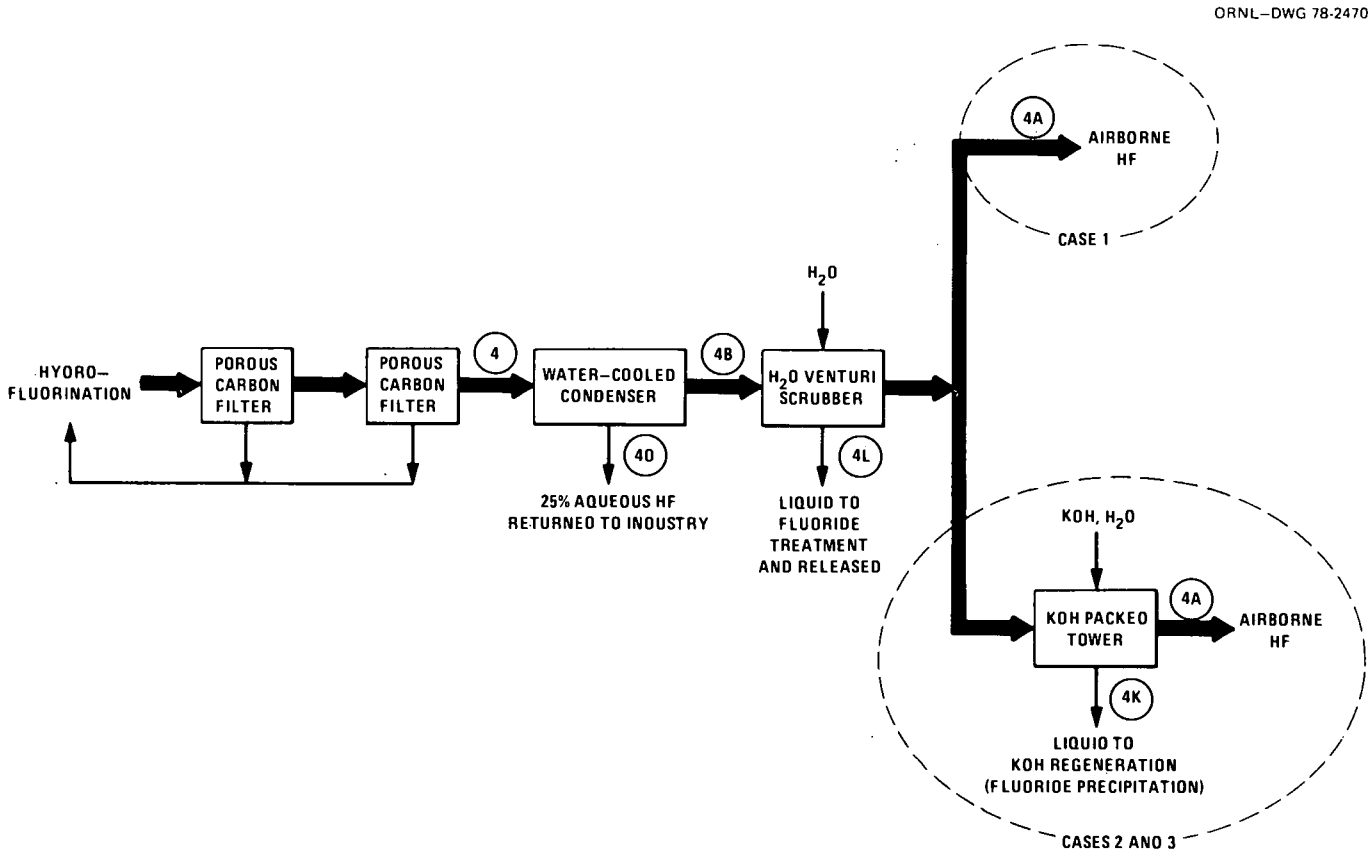

Fig. 4.9. Hydrofluorination off-gas treatment systems for the model SX-F UF_6 plant — Cases 1-3.

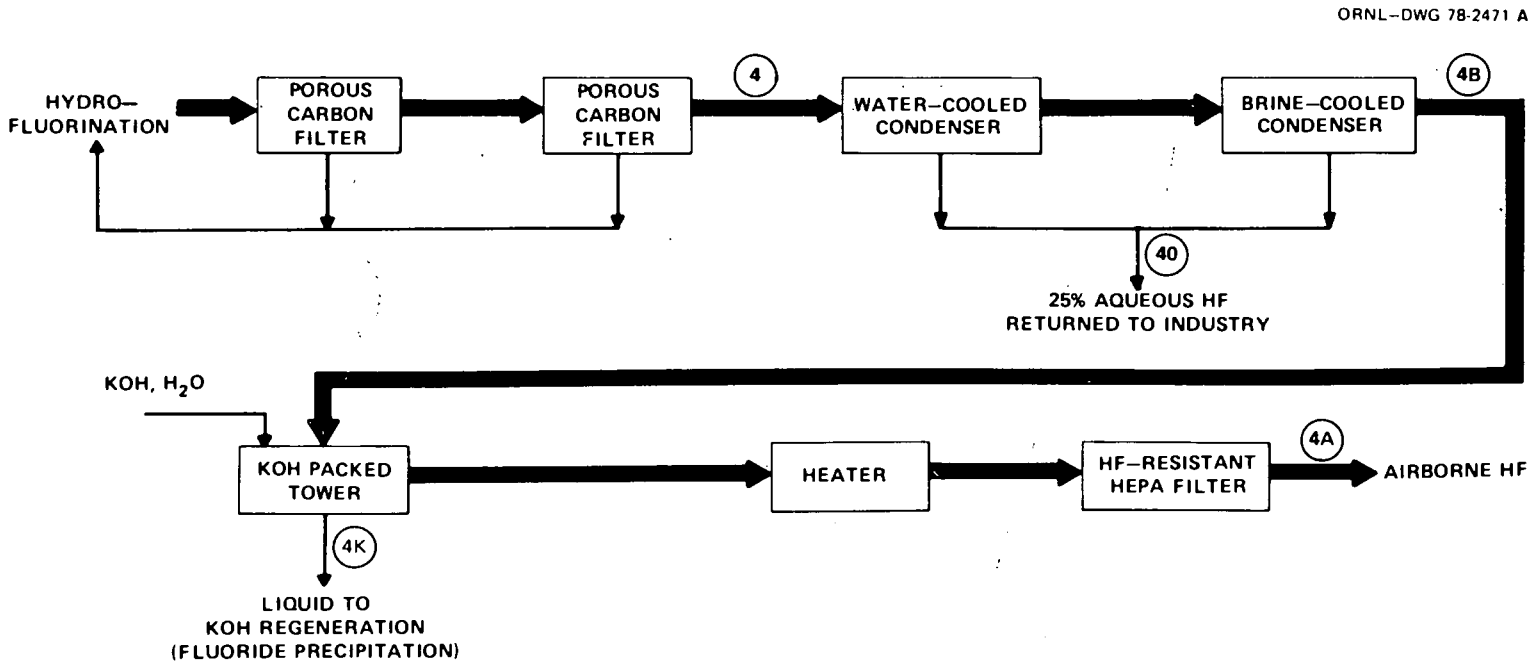

Fig. 4.10. Hydrofluorination off-gas treatment system for the model SX-F UF_6 plant — Case 4.

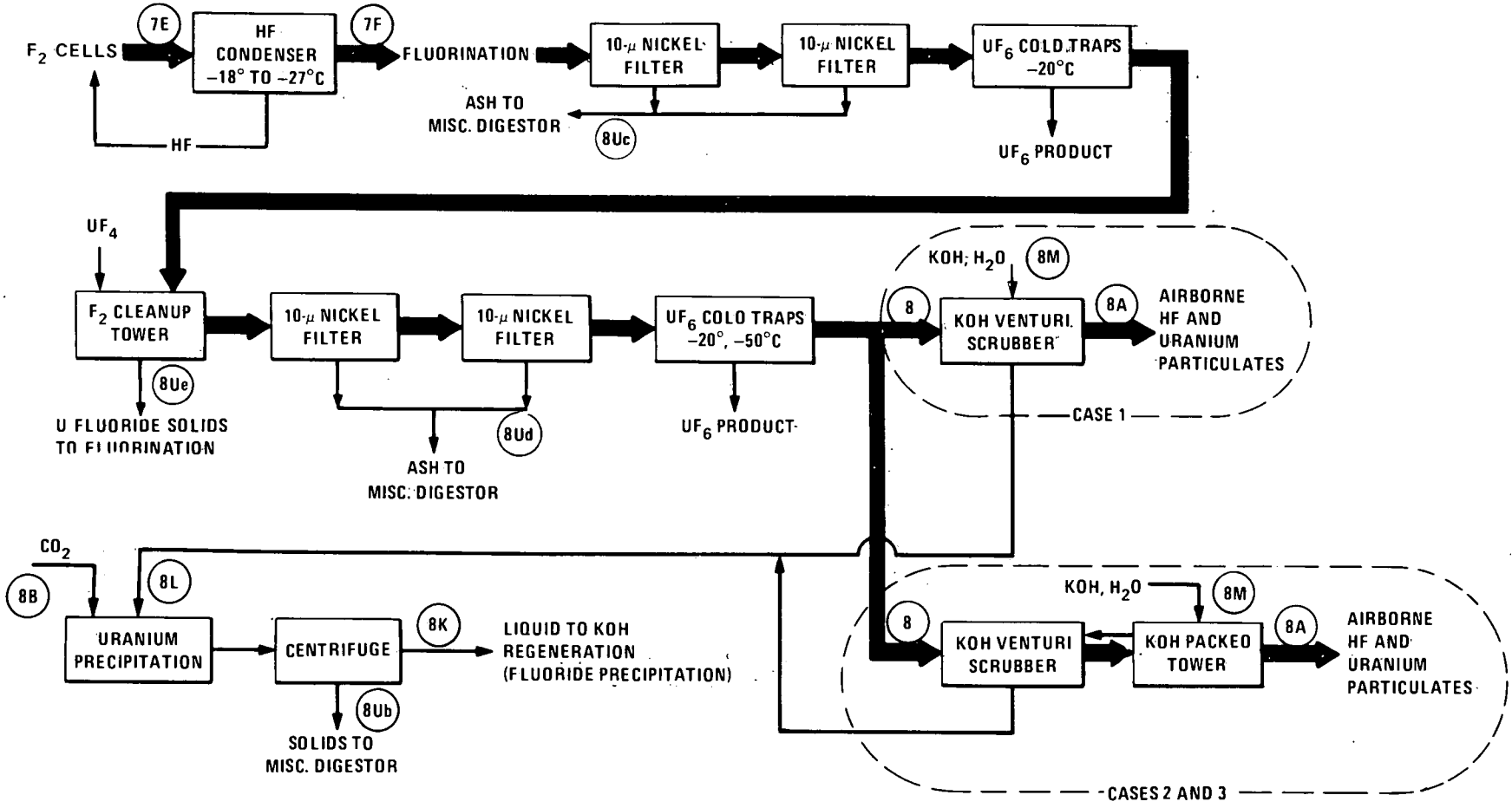

Fig. 4.11. Fluorination off-gas treatment systems for the model SX-F UF_6 plant — Cases 1-3.

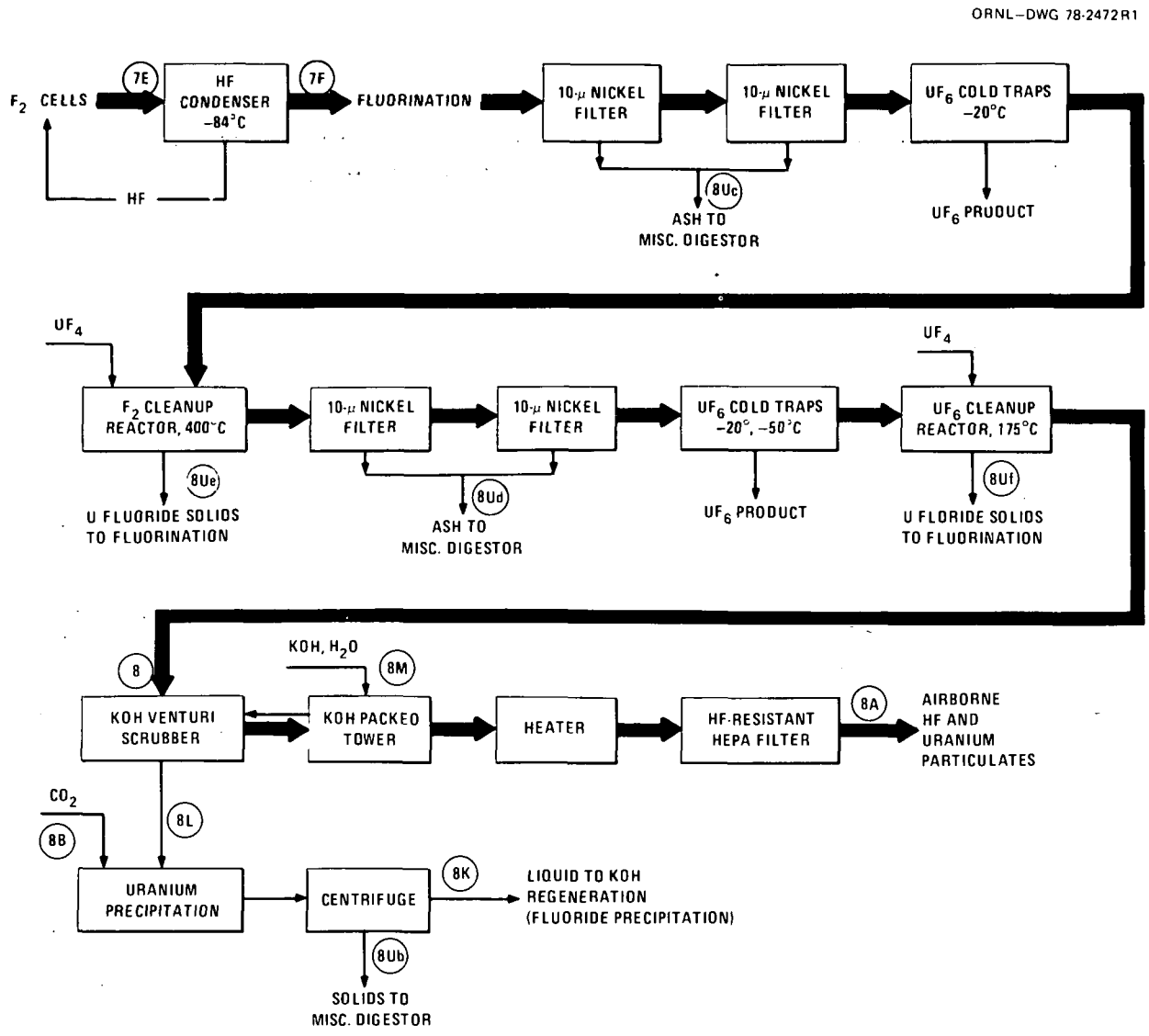

Fig. 4.12. Fluorination off-gas treatment system for the model SX-F UF_6 plant — Case 4.

ORNL–DWG 78-2473

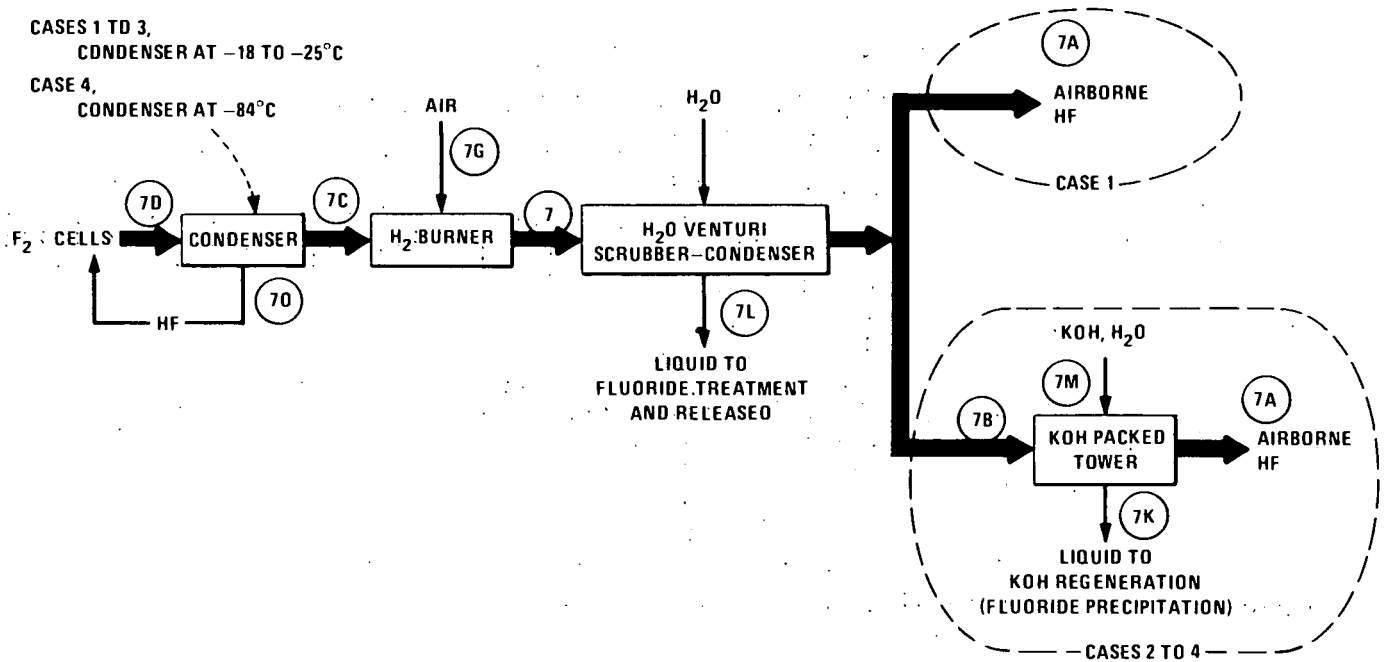

Fig. 4.13. Fluorine cell hydrogen off-gas treatment systems for the model SX-F UF_6 plant — Cases 1-4.

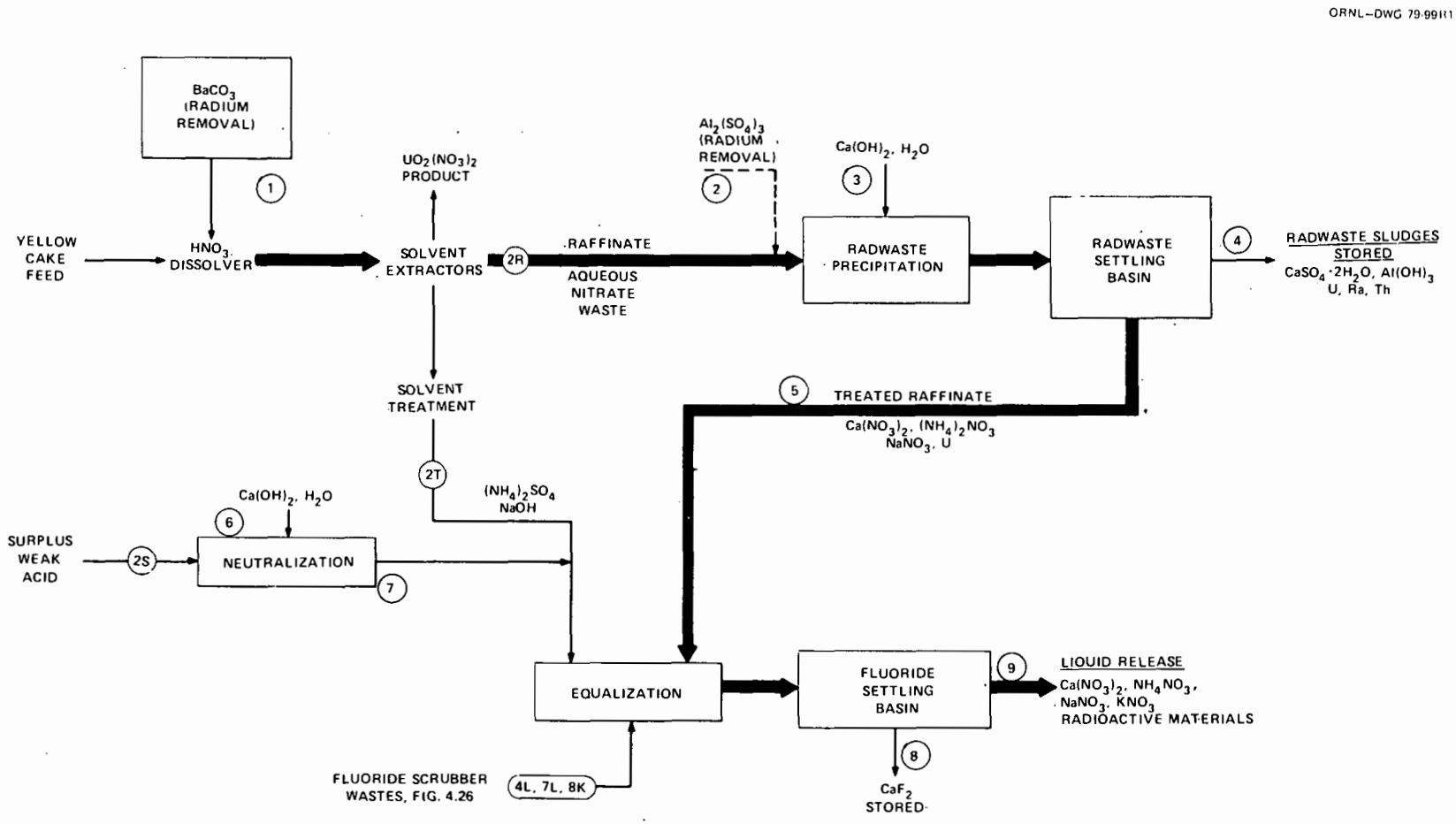

Fig. 4.14. Case 1 system for treating solvent extraction wastes — radwaste impounded; nitrate released. (Codes are for Tables 4.28 and 4.29.)

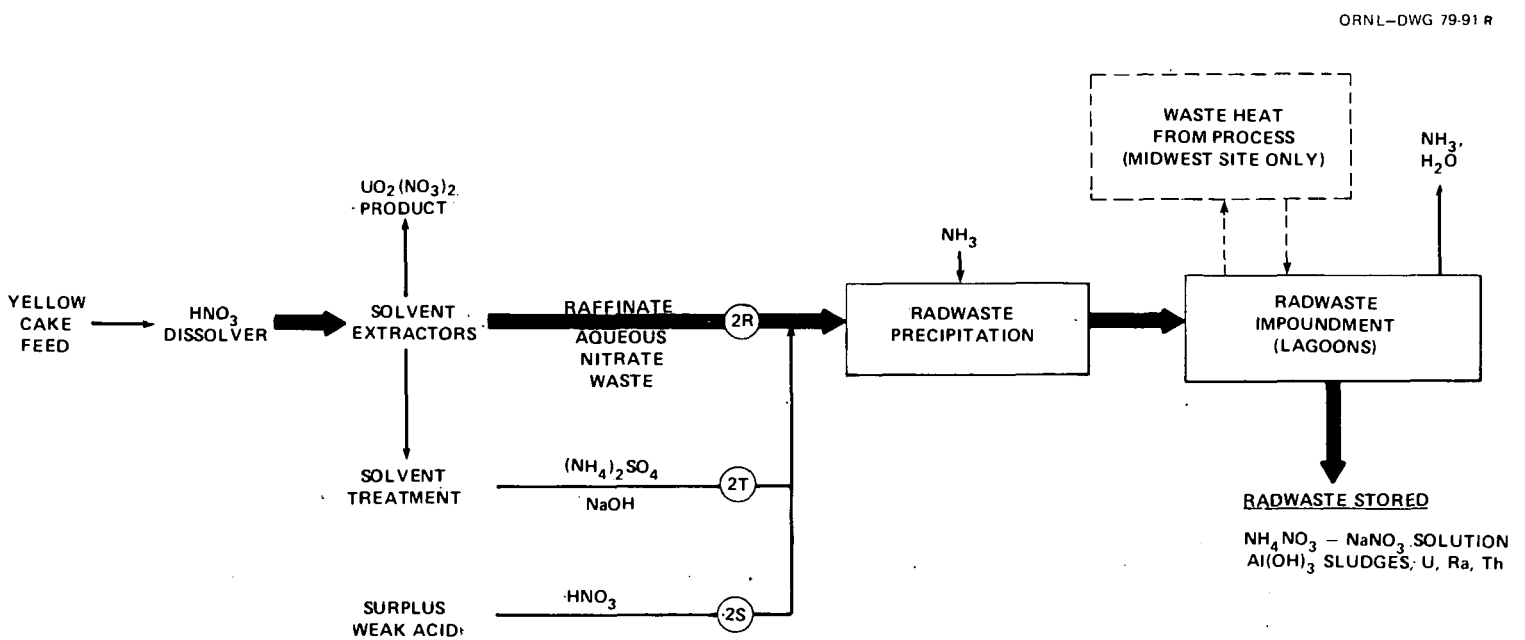

Fig. 4.15. Case 2 system for treating solvent extraction wastes — radwaste and nitrate impounded.

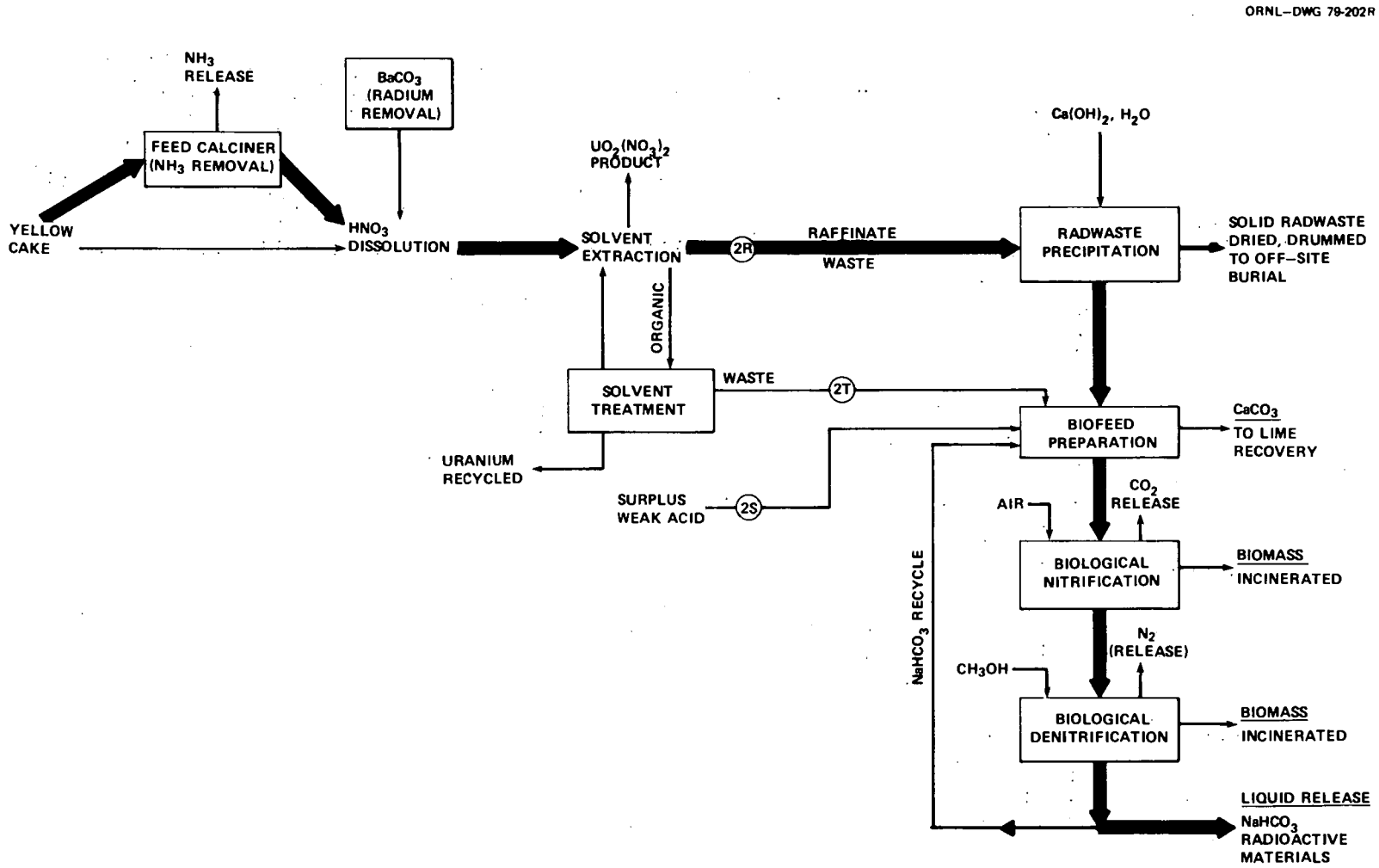

Fig. 4.16. Simplified flow diagram for the Case 3 solvent extraction waste treatment systems.

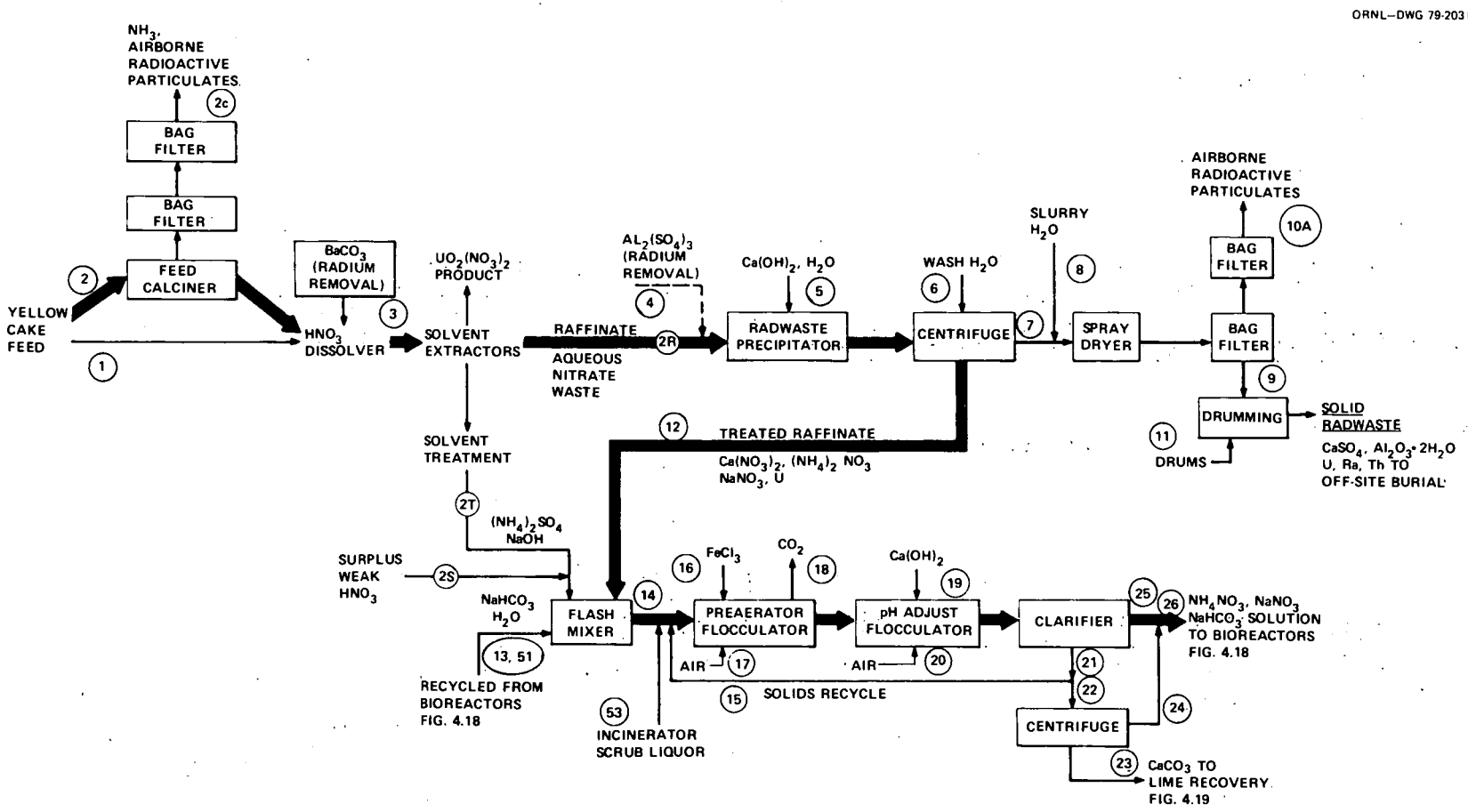

Fig. 4.17. Case 3 systems for radwaste precipitation and drying and for biofeed preparation. (Codes are for Table 4.31.)

ORNL-DWG 79-201 R1

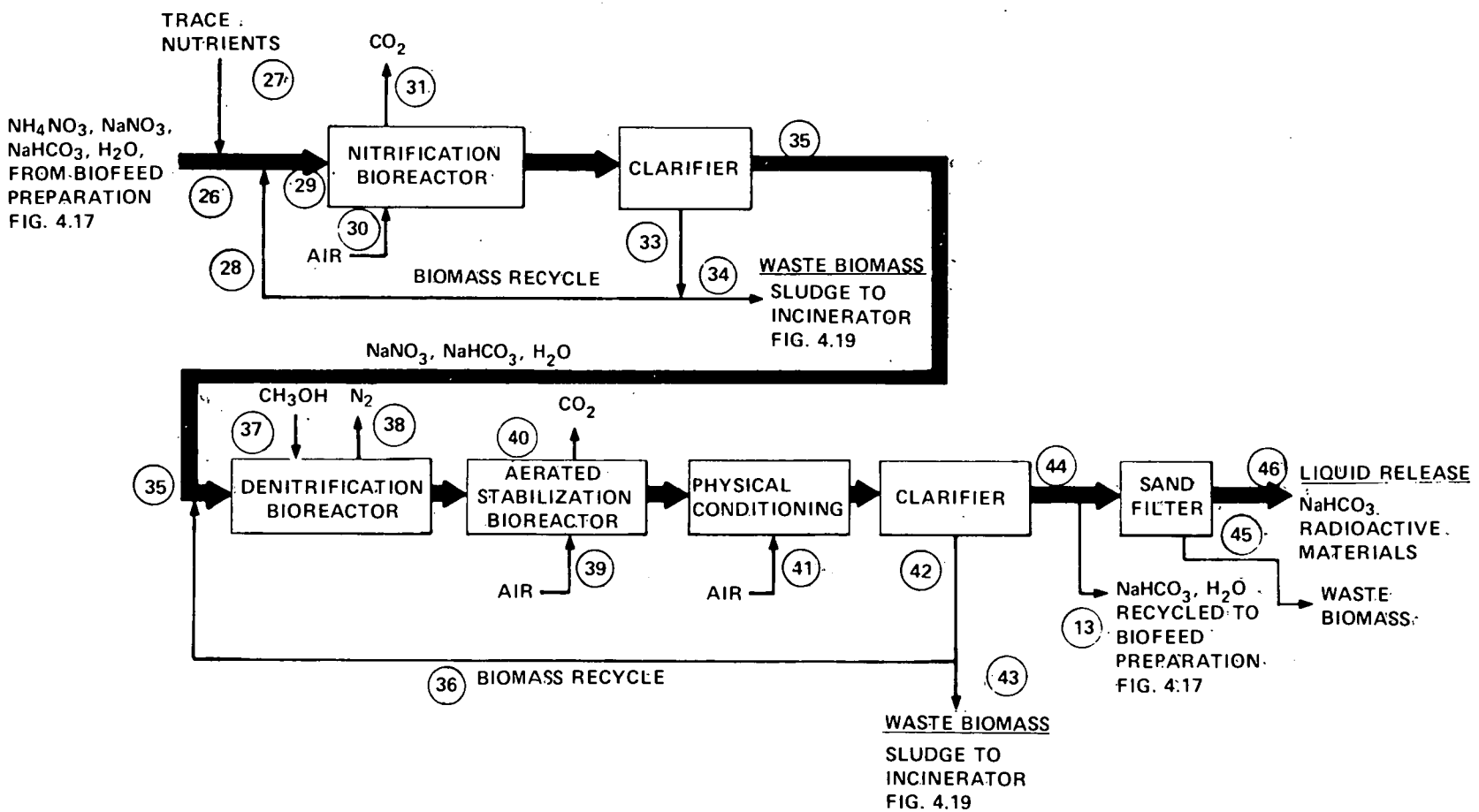

Fig. 4.18. Case 3 systems for biological nitrification and denitrification. (Codes are for Table 4.33.)

ORNL-DWG 79-204 R1

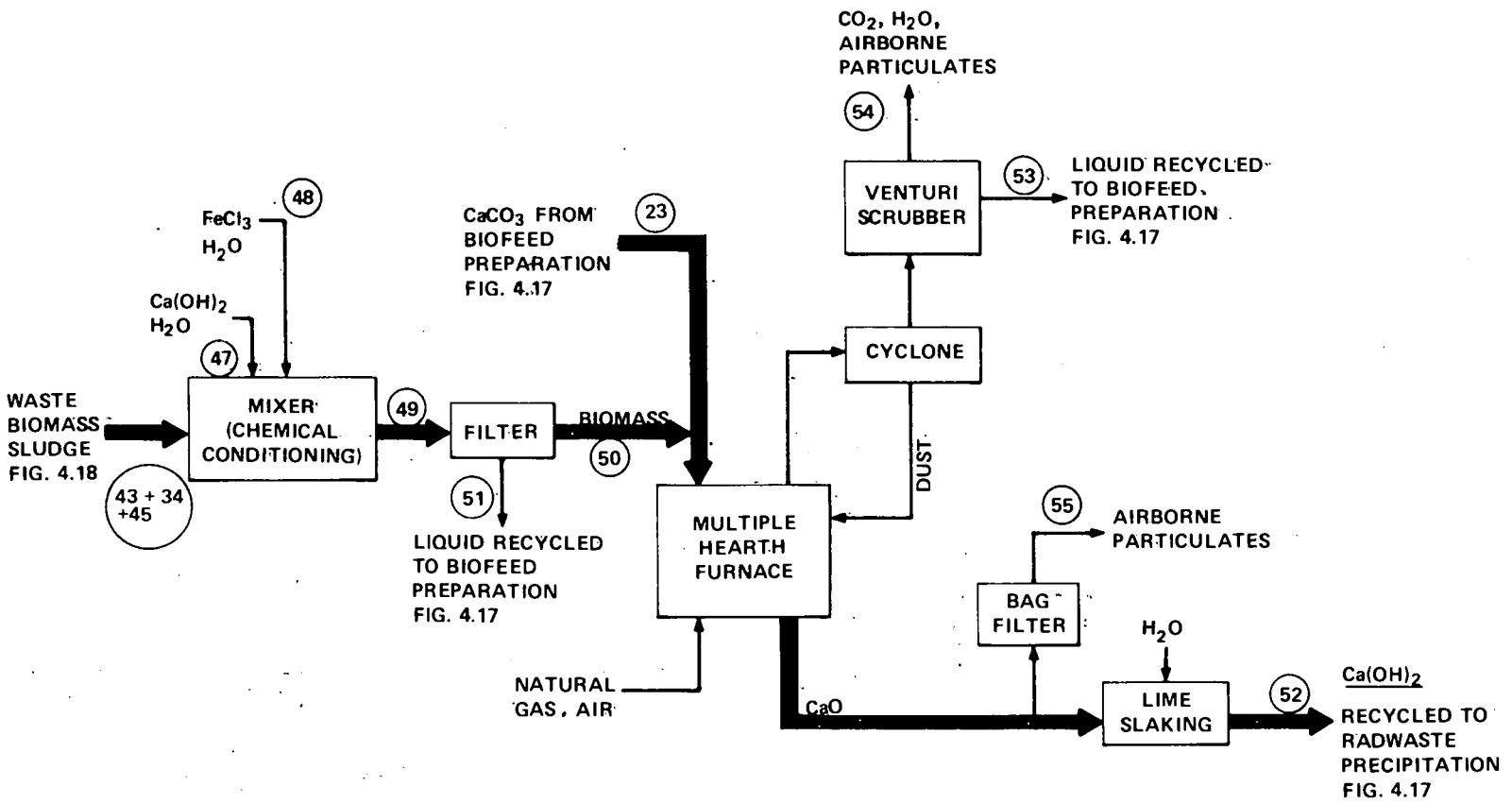

Fig. 4.19. Case 3 systems for treating the solvent extraction wastes — lime recovery and biomass incineration. (Codes are for Table 4.34.)

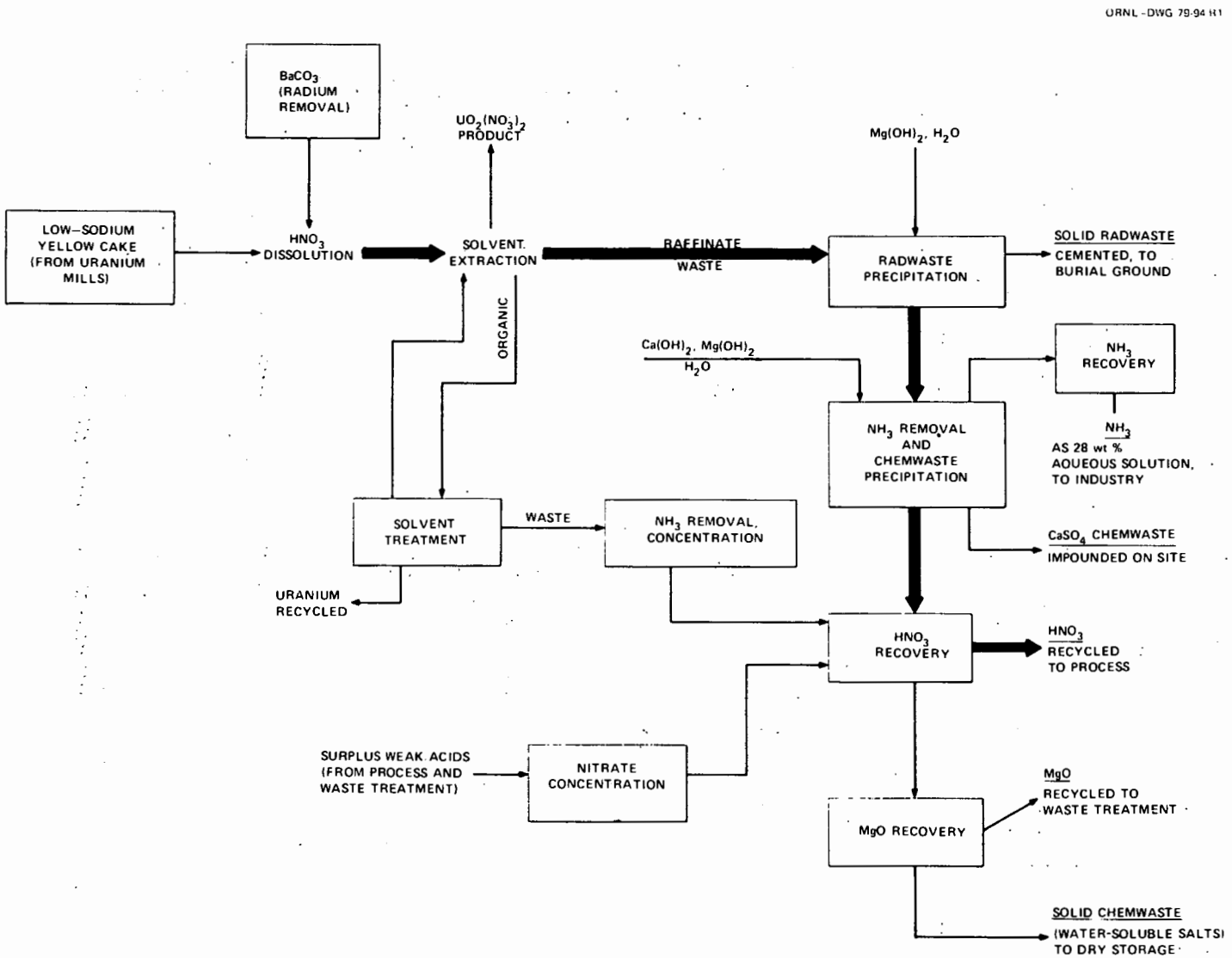

Fig. 4.20. Simplified flow diagram for the Case 4 solvent extraction waste treatment systems. (Not suitable for wastes containing sodium or other alkali metals.)

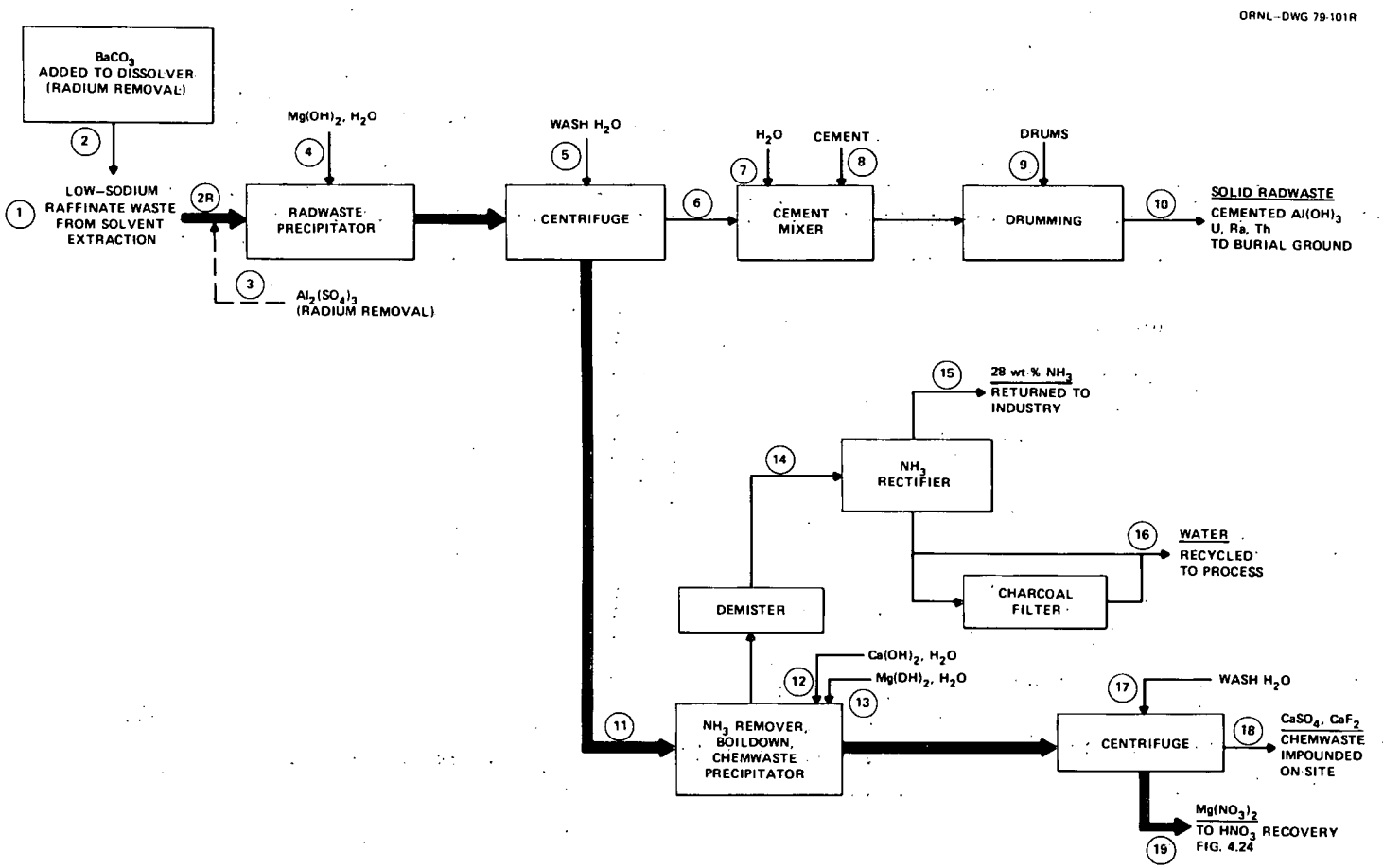

Fig. 4.21. Case 4 systems for treating the solvent extraction raffinate — radwaste precipitation and cementing; ammonia recovery; and chemwaste precipitation. (Codes are for Table 4.35.)

ORNL-DWG 79-88 R1

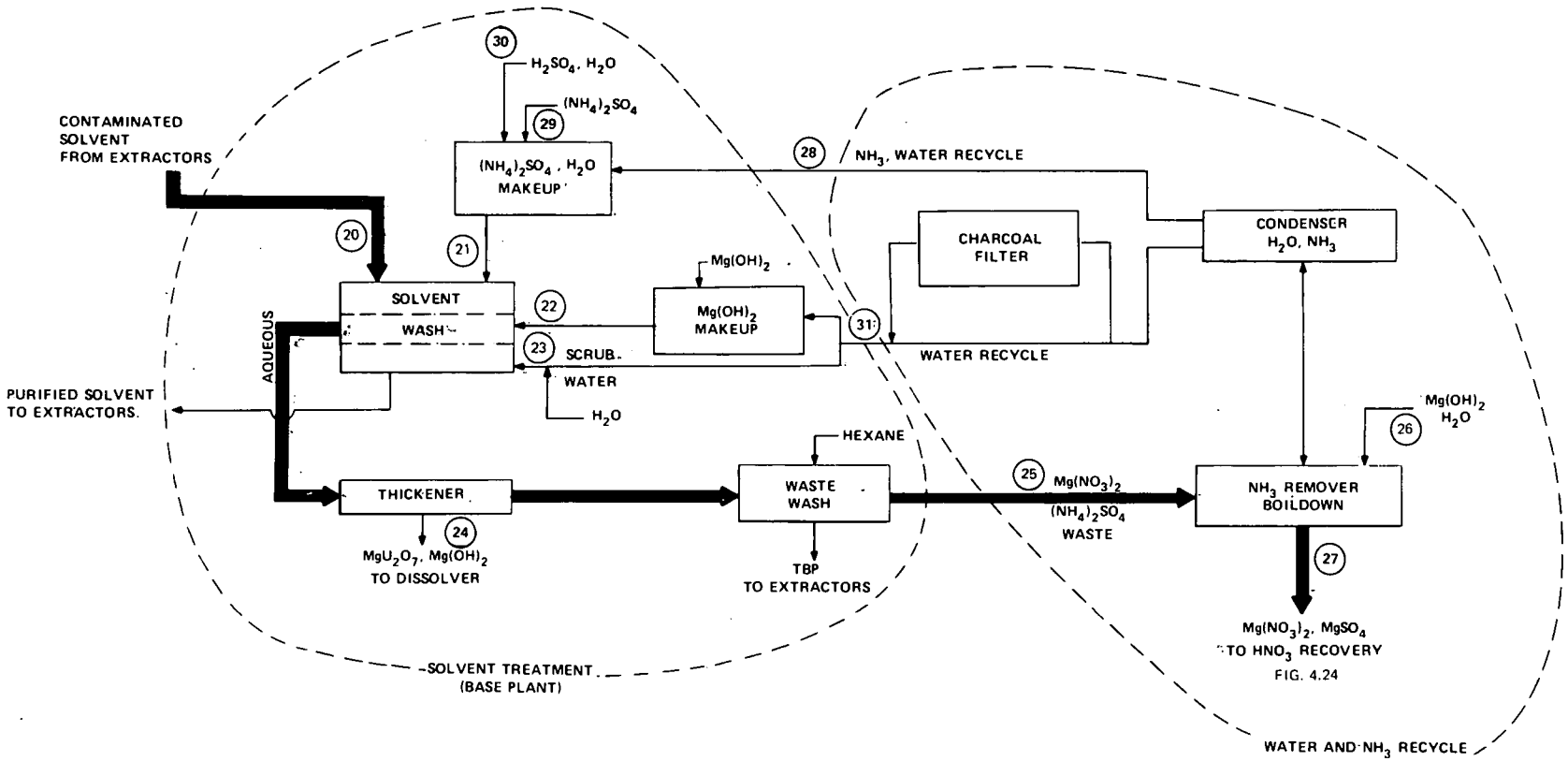

Fig. 4.22. Solvent treatment system with water and ammonia recycle — Case 4. (Codes are for Table 4.36.)

ORNL–DWG 79-97R2

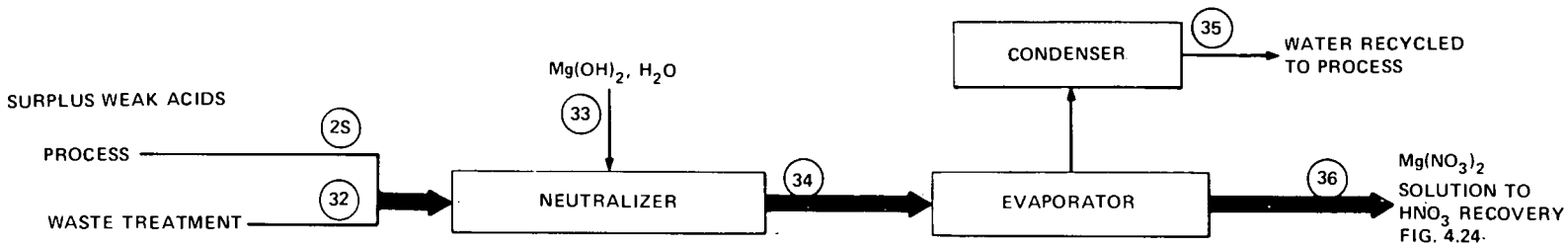

Fig. 4.23. Nitrate concentration system for surplus weak acids — Case 4. (Codes are for Table 4.37.)

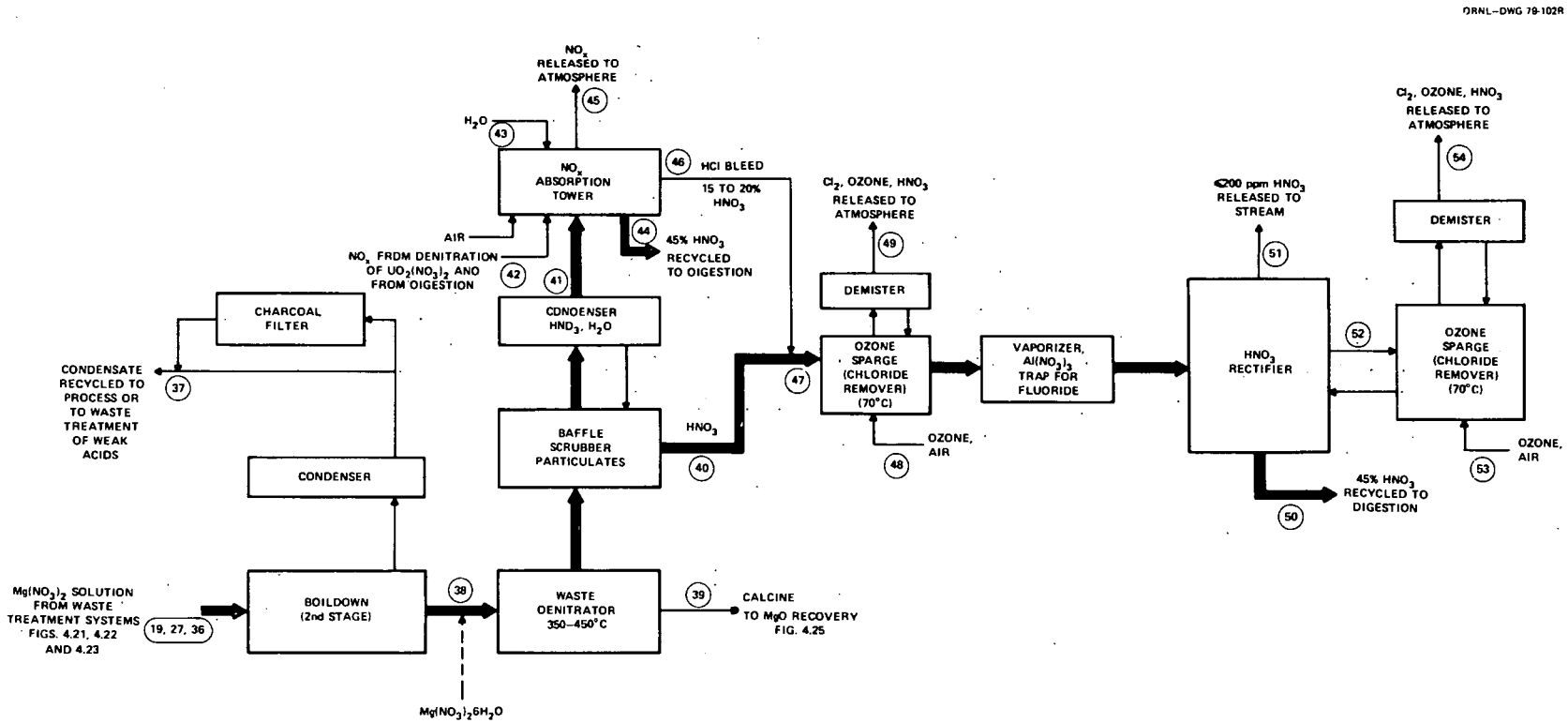

Fig. 4.24. Nitric acid recovery system for solvent extraction wastes — Case 4. (Codes are for Table 4.39.)

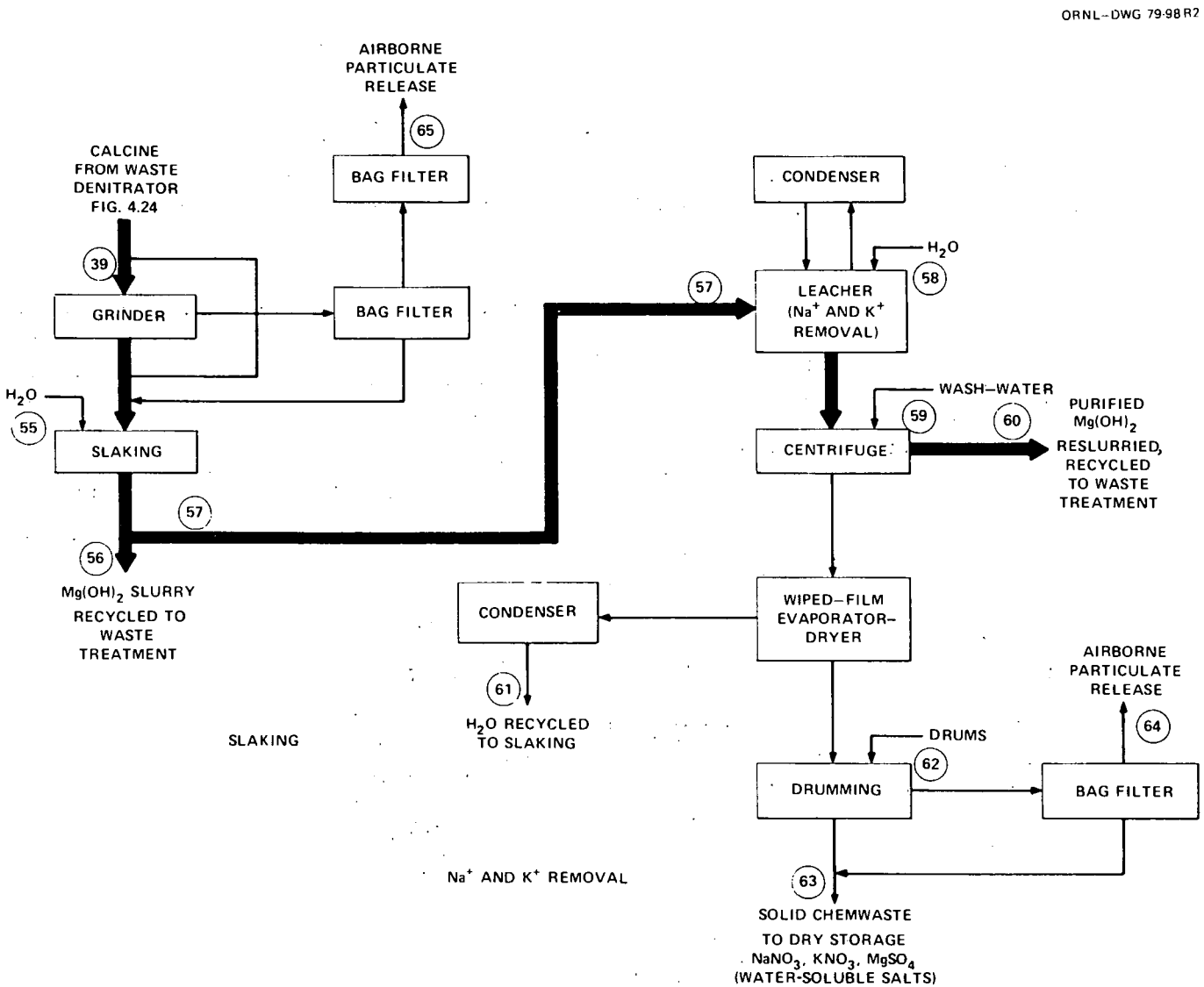

Fig. 4.25. Magnesia recovery system for treating solvent extraction wastes — Case 4. (Codes are for Table 4.40.)

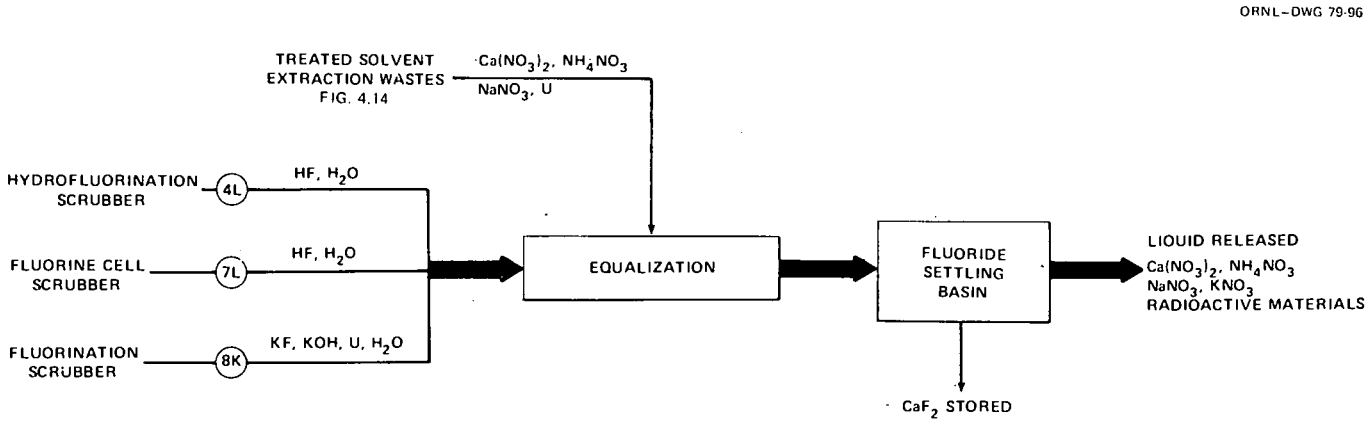

Fig. 4.26. Treatment system for fluoride scrubber liquors — Case 1. (Flows are given in Table 4.28.)

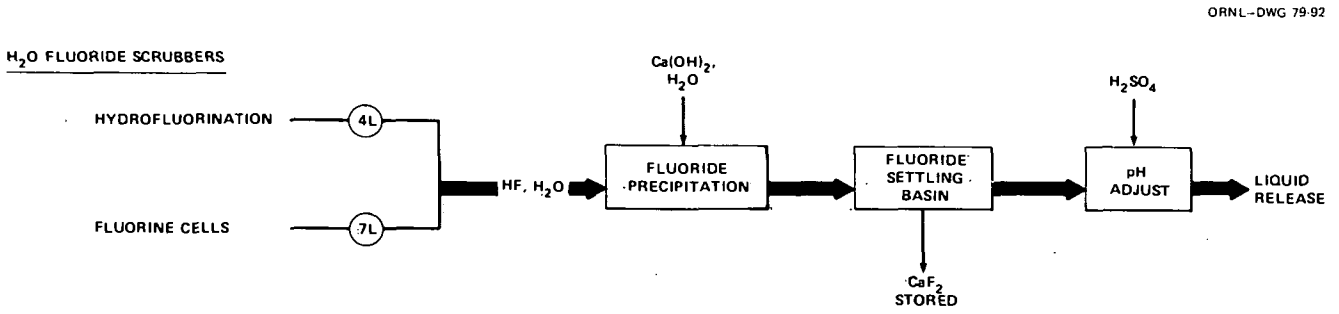

Fig. 4.27. Treatment system for water fluoride scrubber liquors — Cases 2 and 3. (Flows are given in Table 4.41. Case 4 is similar except that the only waste to be treated is stream 7L from the fluorine cells.)

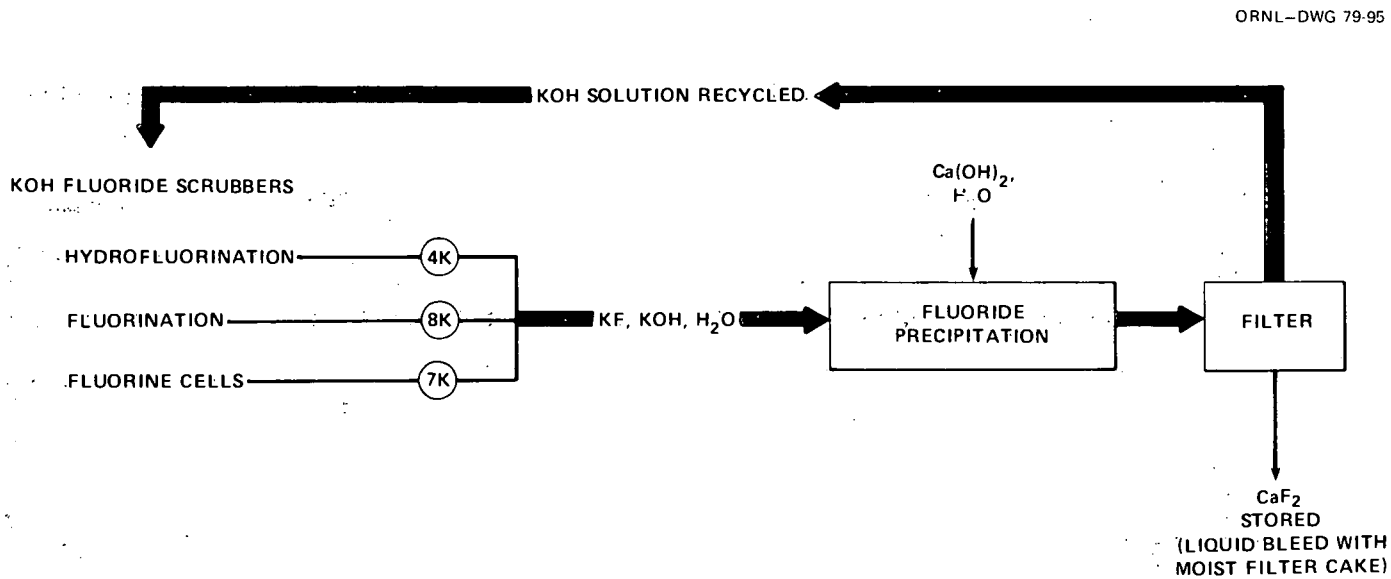

Fig. 4.28. Potassium hydroxide regeneration system for fluoride scrubber liquors — Cases 2–4. (Flows are given in Table 4.41.)

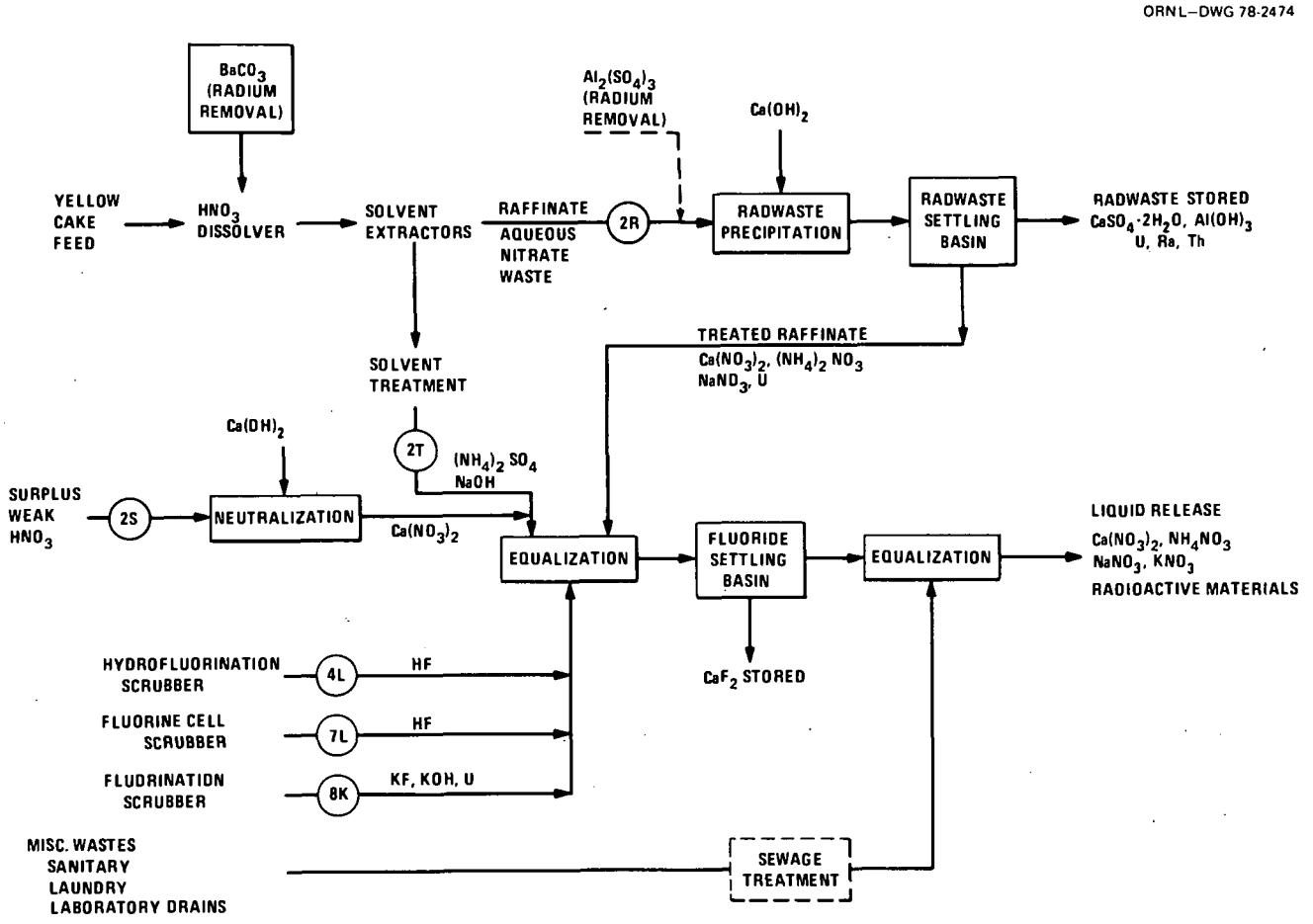

Fig. 4.29. Summary of Case 1 liquid radwaste-chemwaste treatment systems for the model SX-F UF_6 plant.

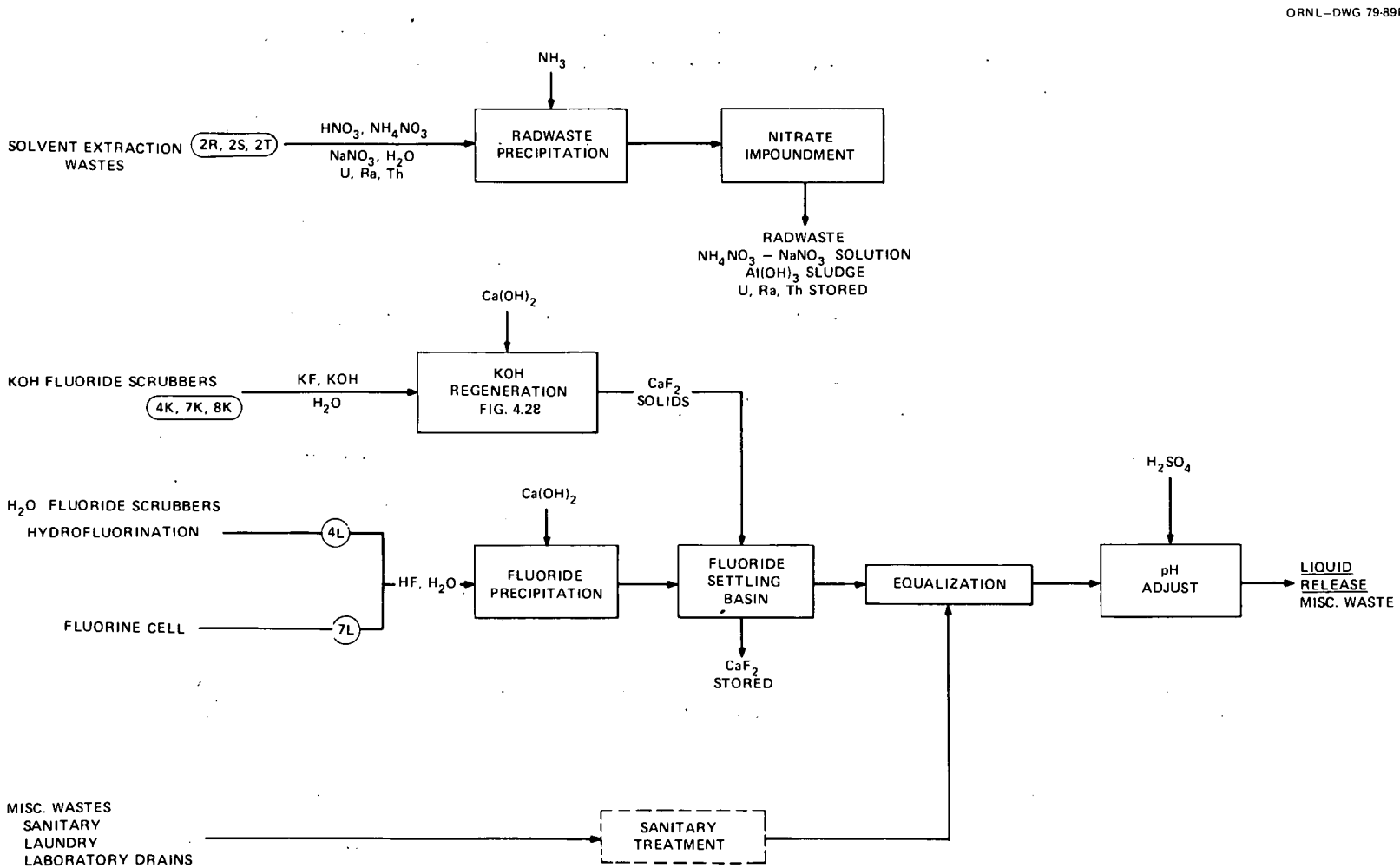

Fig. 4.30. Summary of Case 2 liquid radwaste-chemwaste treatment systems for the model SX-F UF_6 plant.

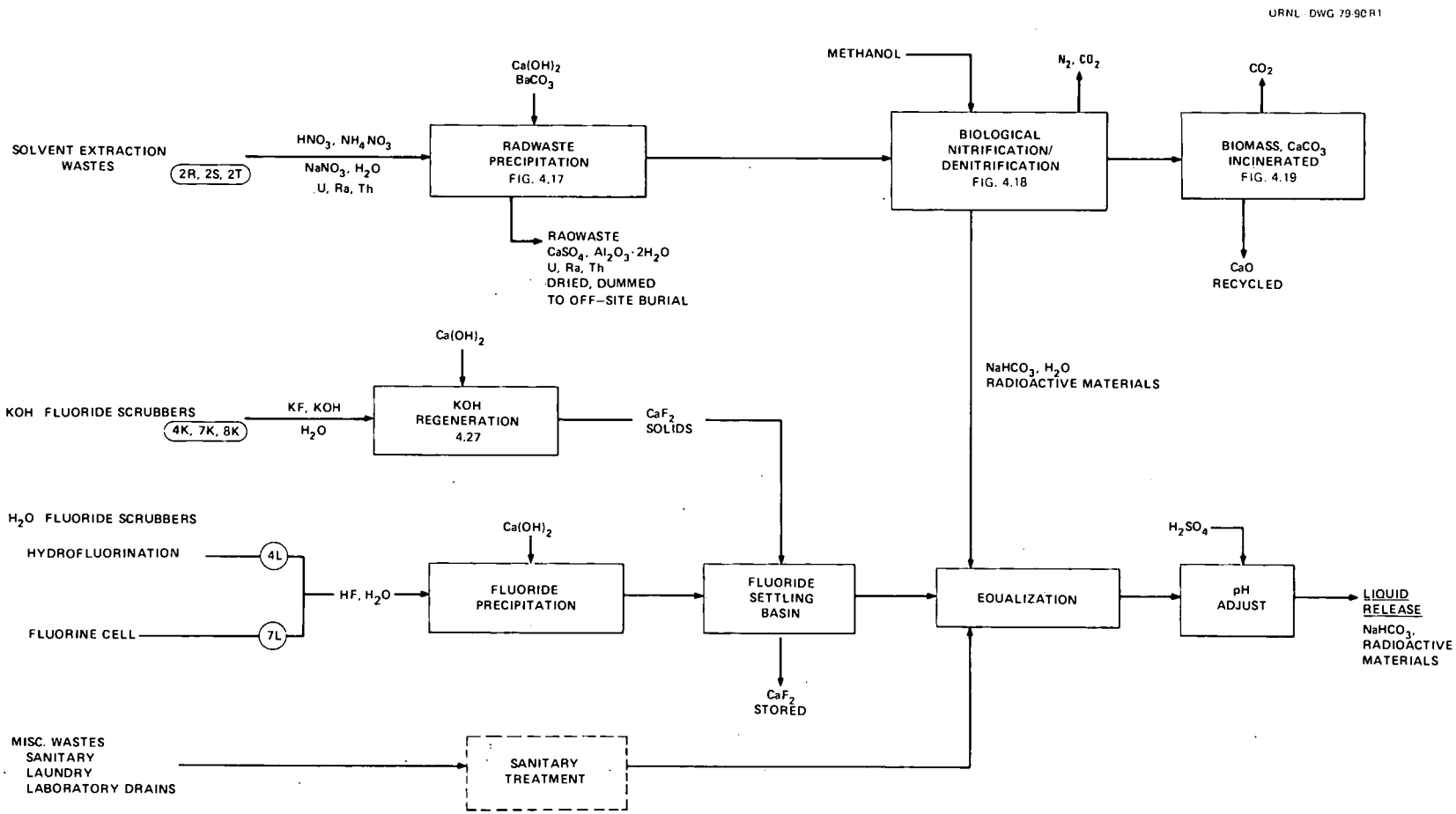

Fig. 4.31. Summary of Case 3 liquid radwaste-chemwaste treatment systems for the model SX-F UF_6 plant.

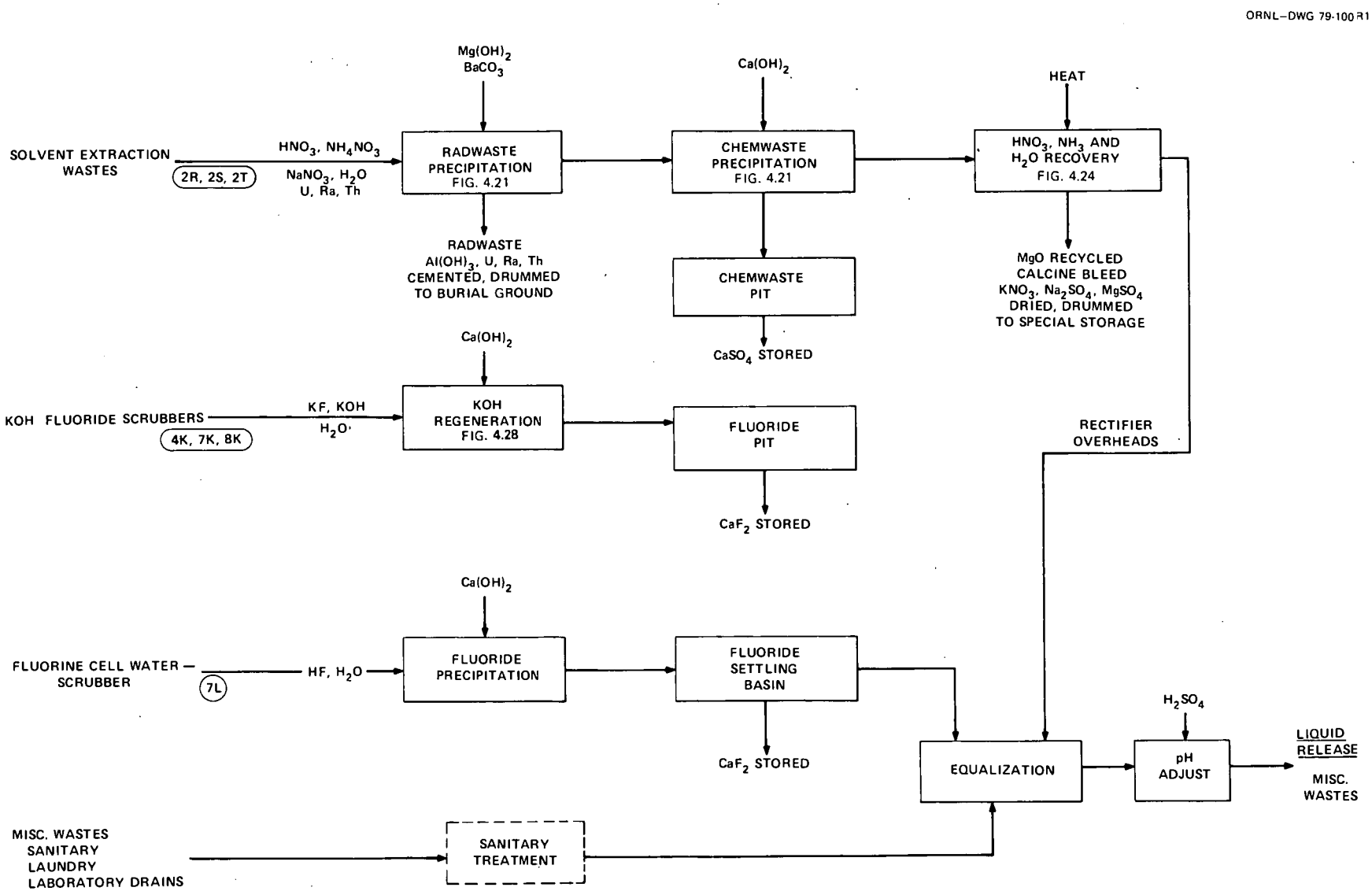

Fig. 4.32. Summary of Case 4 liquid radwaste-chemwaste treatment systems for the model SX-F UF_6 plant.

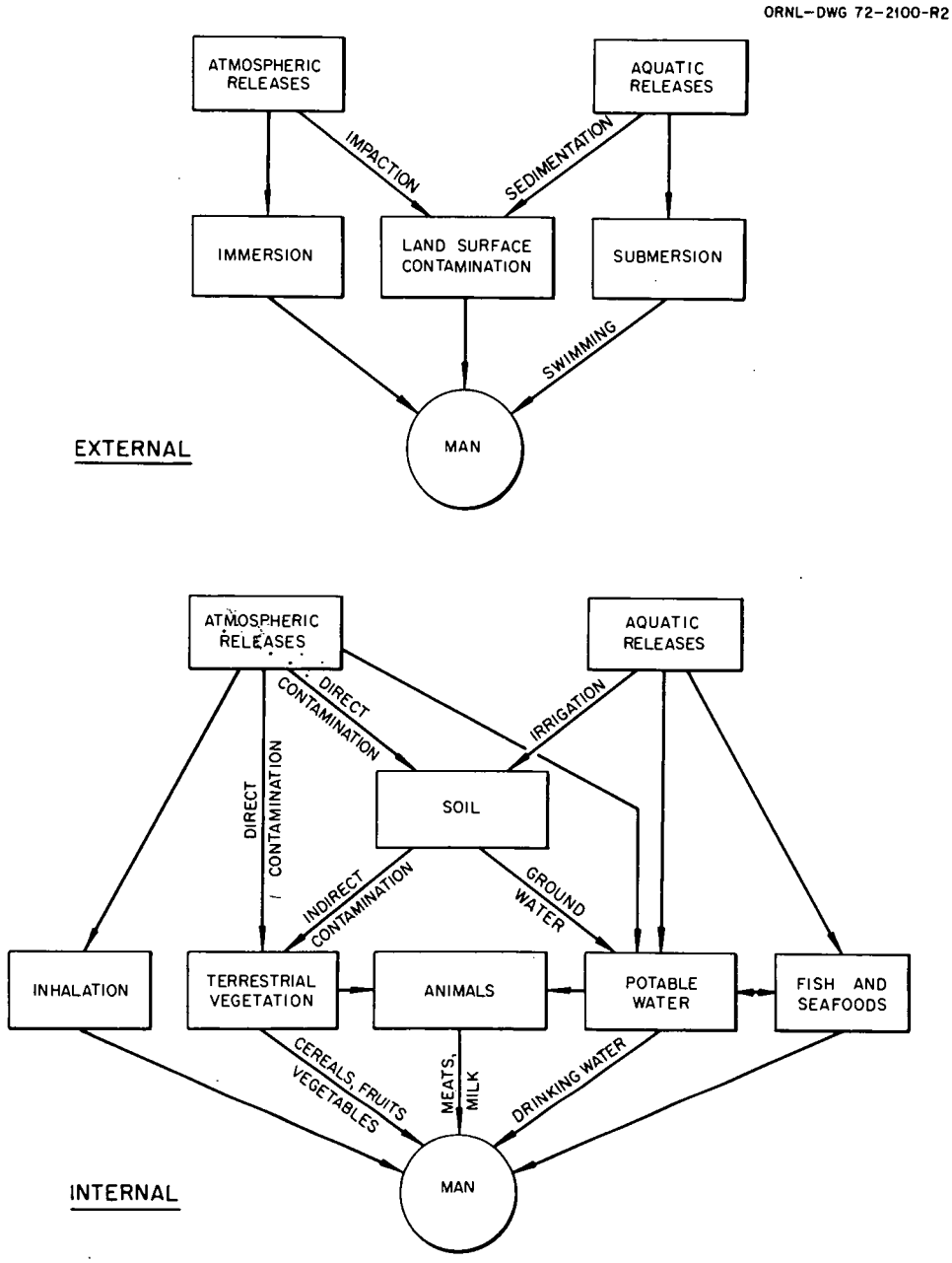

Fig. 7.1. Pathways for external and internal exposure of man.

ORNL/TM-8602
Dist. Category UC-11

INTERNAL DISTRIBUTION

1. S. I. Auerbach
2. J. O. Blomeke
3. W. D. Burch
4-8. E. L. Etnier
9. E. J. Frederick
10. W. S. Groenier
11. J. R. Hightower
12-16. G. S. Hill
17. S. V. Kaye
18. R. E. Leuze
19. A. L. Lotts
20. A. P. Malinauskas
21. R. E. Norman
22-23. B. D. Patton
24. D. C. Parzyek
25. P. S. Rohwer
26. T. H. Row
27-31. M. B. Sears
32. M. G. Stewart
33-37. J. G. Stradley
38. V. C. A. Vaughen
39. S. K. Whatley
40-44. J. P. Witherspoon
45. R. G. Wymer
46. J. R. Merriman (Consultant)
47-48. Central Research Library
49. ORNL Y-12 Technical Library Document Reference Section
50-51. Laboratory Records
52. Laboratory Records - ORNL RC
53. ORNL Patent Section

EXTERNAL DISTRIBUTION

54. Office of Assistant Manager for Energy Research and Development, DOE-ORO, P. O. Box E, Oak Ridge, TN 37830
55. S. N. Yen, Bechtel National, Inc., P. O. Box 3965, San Francisco, CA 94119
56. N. F. Barr, Office of Health and Environmental Research, U.S. Department of Energy, Washington, DC 20545
57. E. W. Grutt, Jr., Grand Junction Office, U.S. Department of Energy, Grand Junction, CO 81501
58. M. J. Steindler, CMT-205, Argonne National Lab., Argonne, IL 60439
59. R. Anderson, Goodyear Atomic Corporation, P. O. Box 628, Piketon, OH 45661
60. A. Blazewitz, Hanford Engineering Development Laboratory, P. O. Box 1970, Richland, WA 99352
61. B. L. Perkins, Los Alamos National Laboratory, P. O. Box 1663, MS 495, Los Alamos, NM 87547
62. J. H. Cavendish, National Lead Company of Ohio, P. O. Box 39158, Cincinnati, OH 45239
63. M. E. Mitchell, Union Carbide Nuclear Corporation, Oak Ridge Gaseous Diffusion Plant, P. O. Box P, Oak Ridge, TN 37830
64. H. Pulley, Union Carbide Nuclear Corporation, Paducah Gaseous Diffusion Plant, P. O. Box 1410, Paducah, KY 42001
65. D. R. Kalkwarf, Pacific Northwest Laboratory, Battelle Memorial Institute, P. O. Box 999, Richland, WA 99352
66. J. H. Davis, Tennessee Valley Authority, Radiological Hygiene Branch, River Oaks Building, Muscle Shoals, AL 35660

67. E. D. Harward, Environmental Project Manager, Atomic Industrial Forum, 7101 Wisconsin Ave., Washington, DC 20014
68. A. J. Cipolla, Allied Chemical Company, P. O. Box 430, Metropolis, IL 62960
69. M. Shepherd, Allied Chemical Company, P. O. Box 430, Metropolis, IL 62960
70. A. K. Williams, Allied General Nuclear Services, P. O. Box 847, Barnwell, SC 29812
71. F. L. Culler, President, Electric Power Research Institute, 3412 Hillview Ave., Palo Alto, CA 94304
72. G. R. Kiel, Exxon Nuclear Company, 2955 George Washington Way, Richland, WA 99352
73. L. H. Brooks, General Atomic Company, P. O. Box 81608, San Diego, CA 92138
74. A. B. Carson, Fast Breeder Reactor Department, Energy Resources and Technology Division, General Electric Company, 175 Curtner Ave., San Jose, CA 95100

75-77. W. J. Shelley, Kerr-McGee Nuclear Corporation, Kerr-McGee Center, Oklahoma City, OK 73125

78. W. H. Lewis, Vice-President, Nuclear Fuel Services, Inc., 6000 Executive Blvd., Suite 600, Rockville, MD 20852
79. Mary Ruth Bateman, Union Carbide Corporation, Corporate Research Laboratory Library, P. O. Box 324, Tuxedo, NY 10987
80. I. J. Dzikowski, National Pollution Discharge Elimination System, U.S. Environmental Protection Agency, Region V, 230 S. Dearborne Ave., Chicago, IL 60604
81. W. R. Ney, Executive Director, National Council on Radiation Protection and Measurements, 7910 Woodmont Ave., Suite 1016, Bethesda, MD 20014
82. J. D. Sheedy, Oklahoma State Department of Health, 1000 N.E. 10th St., P. O. Box 53551, Oklahoma City, OK 73152
83. R. G. Stender, Chief Administrative Compliance Section, U.S. Environmental Protection Agency, Region VI, 1201 Elm St., Dallas, TX 57270
84. P. Gustafson, Director, Department of Nuclear Safety, State of Illinois, 1035 Outer Park Dr., Springfield, IL 62704
85. B. L. Cohen, Department of Physics, University of Pittsburgh, Pittsburgh, PA 15261
86. A. M. Weinberg, Institute for Energy Analysis, Oak Ridge Associated Universities, Oak Ridge, TN 37830
87. G. D. Brown, Office of Inspection and Enforcement, Region IV, U.S. Nuclear Regulatory Commission, 611 Ryon Plaza Dr., Suite 1000, Arlington, TX 76012
88. J. T. Collins, Deputy Director, Office of Inspection and Enforcement, Region IV, U.S. Nuclear Regulatory Commission, 611 Ryon Plaza Dr., Suite 1000, Arlington, TX 76012
89. F. J. Witt, Division of Engineering, Office of Nuclear Reactor Regulations, U.S. Nuclear Regulatory Commission, Washington, DC 20555

90-99. K. G. Steyer, Chief, Chemical Engineering Branch, Division of Engineering Technology, U.S. Nuclear Regulatory Commission, Washington, DC 20555

100-331. Given distribution as shown in TIC-4500 under Environmental Control Technology and Earth Sciences Category (NTIS - 25 copies)

☆U.S. GOVERNMENT PRINTING OFFICE: 1983-646-055/306