820825

DATE ISSUED FEB - 1 1983

ORNL/TM-8493

ornl

OAK
RIDGE
NATIONAL
LABORATORY

UNION
CARBIDE

ORNL
MASTER COPY

Characterization of Solids Flow Through the Full-Scale Experimental Voloxidizer

B. B. Spencer 14

CONSOLIDATED FUEL REPROCESSING PROGRAM

[redacted]

Now full release.
David R. Hamrin
10/12/2010

OPERATED BY
UNION CARBIDE CORPORATION
FOR THE UNITED STATES
DEPARTMENT OF ENERGY

Printed in the United States of America. Available from
the U.S. Department of Energy
Technical Information Center
P.O. Box 62, Oak Ridge, Tennessee 37830

This report was prepared as an account of work sponsored by an agency of the United States Government. Neither the United States Government nor any agency thereof, nor any of their employees, makes any warranty, express or implied, or assumes any legal liability or responsibility for the accuracy, completeness, or usefulness of any information, apparatus, product, or process disclosed, or represents that its use would not infringe privately owned rights. Reference herein to any specific commercial product, process, or service by trade name, trademark, manufacturer, or otherwise, does not necessarily constitute or imply its endorsement, recommendation, or favoring by the United States Government or any agency thereof. The views and opinions of authors expressed herein do not necessarily state or reflect those of the United States Government or any agency thereof.

ORNL/TM-8493
Dist. Category UC-86
(Applied)

Contract No. W-7405-eng-26

Consolidated Fuel Reprocessing Program

CHARACTERIZATION OF SOLIDS FLOW THROUGH THE FULL-SCALE EXPERIMENTAL VOLOXIDIZER

B. B. Spencer
Fuel Recycle Division

Date Published - February 1983

NOTICE This document contains information of a preliminary nature. It is subject to revision or correction and therefore does not represent a final report.

OAK RIDGE NATIONAL LABORATORY
Oak Ridge, Tennessee 37830
operated by
UNION CARBIDE CORPORATION
for the
DEPARTMENT OF ENERGY

CONTENTS

ABSTRACT 1

1. INTRODUCTION 1
   1.1 Significance of the Study 1
   1.2 Experimental Equipment 2

2. SOLIDS RESIDENCE TIME DISTRIBUTION 2
   2.1 Method of Measurement 2
   2.2 Analysis of Experimental RTD 4
   2.3 Extension to Prototypical Conditions 7

3. SURGE CAPACITY AND INVENTORY PROFILE 8
   3.1 The Surge Tank Mode 8
   3.2 Experimentally Determined Surge Capacity 9
   3.3 Inventory Profile 10

4. OPERATION AT PROTOTYPICAL AND HIGHER FEED RATES 15
   4.1 Nominal Feed Rates 15
   4.2 High Feed Rates 16

5. CONCLUSIONS 18

6. REFERENCES 19

NOMENCLATURE 20

APPENDIX 21

CHARACTERIZATION OF SOLIDS FLOW THROUGH THE FULL-SCALE EXPERIMENTAL VOLOXIDIZER

B. B. Spencer
Fuel Recycle Division

ABSTRACT

The voloxidation process has been under development as a dry head-end method for removing tritium from spent uranium reactor fuel prior to aqueous processing. Tritium is released from the fuel when the fuel changes in crystalline structure upon oxidation from UO_2 to U_3O_8. Since the oxidation reaction takes place in a temperature range of 720 to 920 K and since agitation was thought to be beneficial to the reaction, a rotary calciner was chosen as the reactor.

A rotary calciner, called the Full-Scale Experimental Voloxidizer (FSEV), capable of processing fuel at a rate of 0.5 t/d of heavy metal, was designed, fabricated, and tested. The purposes of this study were to: (1) quantify the residence time distribution (dispersion) of the chopped fuel which influences the mean conversion, (2) quantify the surge capacity that the voloxidizer provides between shearing and dissolution, and (3) determine the maximum feed rate that the voloxidizer may tolerate. Data pertinent to this study were extracted from the data logged on magnetic tape during the experimental phase of the project.

The dispersion number, describing the nonideal flow of sheared fuel rod through the voloxidizer, was found to agree closely with correlations developed from data obtained on smaller units. The mean residence time of the solids was equivalent to ~4 h at a rotational speed of 1.0 rpm, which is adequate for the required conversion. The FSEV has a 12-h surge capacity, during which time no solids are discharged, at the nominal rate. A maximum feed rate of five times the nominal rate can be tolerated for a period of 5 h while still feeding the dissolver.

1. INTRODUCTION

The voloxidation process has been under development as a dry head-end method for removing tritium from spent uranium reactor fuel prior to aqueous processing. The process is based on the reaction of the oxide fuel with oxygen or air at a temperature range of 720 to 920 K, where the release of tritium and, to a lesser extent, some of the other fission products occurs when UO_2 is restructured to U_3O_8. The rationale for process development assumes that it is more desirable to remove tritium from the fuel and concentrate it into a relatively small volume than to dilute the tritium with water in subsequent aqueous processing steps. Additional benefits of voloxidation include oxidation of residual sodium in the fuel prior to dissolution, an increase in the rate of dissolution, and provision of a temperature-controlled surge capacity between shearing and dissolution.

1.1 Significance of the Study

The behavior of solids flow in a voloxidizer is important to characterize because such flow has a profound influence on the efficiency of the voloxidation process. Solid particles tumble and bounce about within the rotating voloxidizer drum in a random manner leading to a range of residence times distributed about some mean. Since the voloxidizer is essentially a reactor where UO_2 is converted to U_3O_8, thereby releasing tritium, the residence time distribution (RTD) of the solids directly affects mean conversion. In addition to its primary purpose of removing tritium from spent fuel, the presence of a voloxidizer in a fuel reprocessing plant creates an opportunity to provide surge capacity between shearing and dissolution. It is therefore desirable to know the limits on this surge capacity and the inventory profile within the machine. The inventory profile is required to calculate heat loads imposed

by radioactive decay of the fuel. Knowledge of the maximum rate at which solids may be fed to the voloxidizer may prove useful in a situation where the shear loses coolant and must chop and discharge a fuel element as quickly as possible.

1.2 Experimental Equipment

All data were collected on the Full-Scale Experimental Voloxidizer (FSEV), which has been previously described in great detail by Spencer et al.[1] This unit is prototypical in both size and solids handling capacity. The internal mixing flights are of three types: dam, straight, and helical, comprising sectional lengths as shown in Fig. 1.1. Three flight designs were used to cause desirable solids flow patterns. The dam flights in the inlet section move solids forward at a high linear velocity regardless of the direction of rotation of the drum. Straight flights are used in the furnace section to cause low solids velocity, but the direction of movement is dependent on drum slope rather than rotational direction. The product cooler/discharge sections are equipped with helical flights that move solids forward at a high linear velocity when the drum rotates in the "forward" direction and push solids back into the furnace section when the drum rotates in "reverse." Additional descriptions of the functions of the different flights appear in Sect. 3.1.

2. SOLIDS RESIDENCE TIME DISTRIBUTION

It was desired to measure and subsequently describe the residence time distribution (RTD) of sheared fuel rods (hulls) in a voloxidizer. Stainless steel rods, 0.64 cm (0.25 in.) in diameter, sheared to 2.54-cm (1-in.) lengths were used as stand-in material for shear product. This material has an effective density of 3 910 kg/m^3 (243.6 lb/ft^3). No shroud or fines were used in these tests because earlier experiments[2] indicated that the fines RTD tends toward that of the larger material and because the reference shear scenario is to remove the shroud prior to shearing. A near prototypic feed rate of the stand-in material, on a volumetric or number of particles basis, is 600 g/min (see Appendix), and a prototypic drum rotational speed is 1.0 rpm. However, the mean time for passage of the material through the calciner at these conditions causes the experiments to be lengthy. On the basis of a study performed by Whatley,[3] the experimental time can be cut in half by doubling both the feed rate and the drum rotational speed without affecting the holdup. Therefore, all runs were performed at 2.0 rpm and a feed rate of 1200 g/min.

Another important parameter affecting the mean time of passage of solids through the voloxidizer is the slope of the rotary drum. The slope was measured optically, by a previously reported method,[4] and found to be 7.23×10^{-3} m/m (0.0867 in./ft), which is steeper than the prototypical slope of 5.21×10^{-3} m/m (0.0625 in./ft).

2.1 Method of Measurement

The RTD was measured by the impulse-response method. Hulls (solids) were fed in shots of 600 g on 30-s intervals until a steady-state discharge flow was achieved. Painted hulls, which served as the tracer, were fed in place of the plain hulls as follows: three shots of white, three shots of red, three shots of blue, and three shots of yellow; then, feeding of the plain hulls resumed. The discharged solids were collected at 2-min intervals, the whole

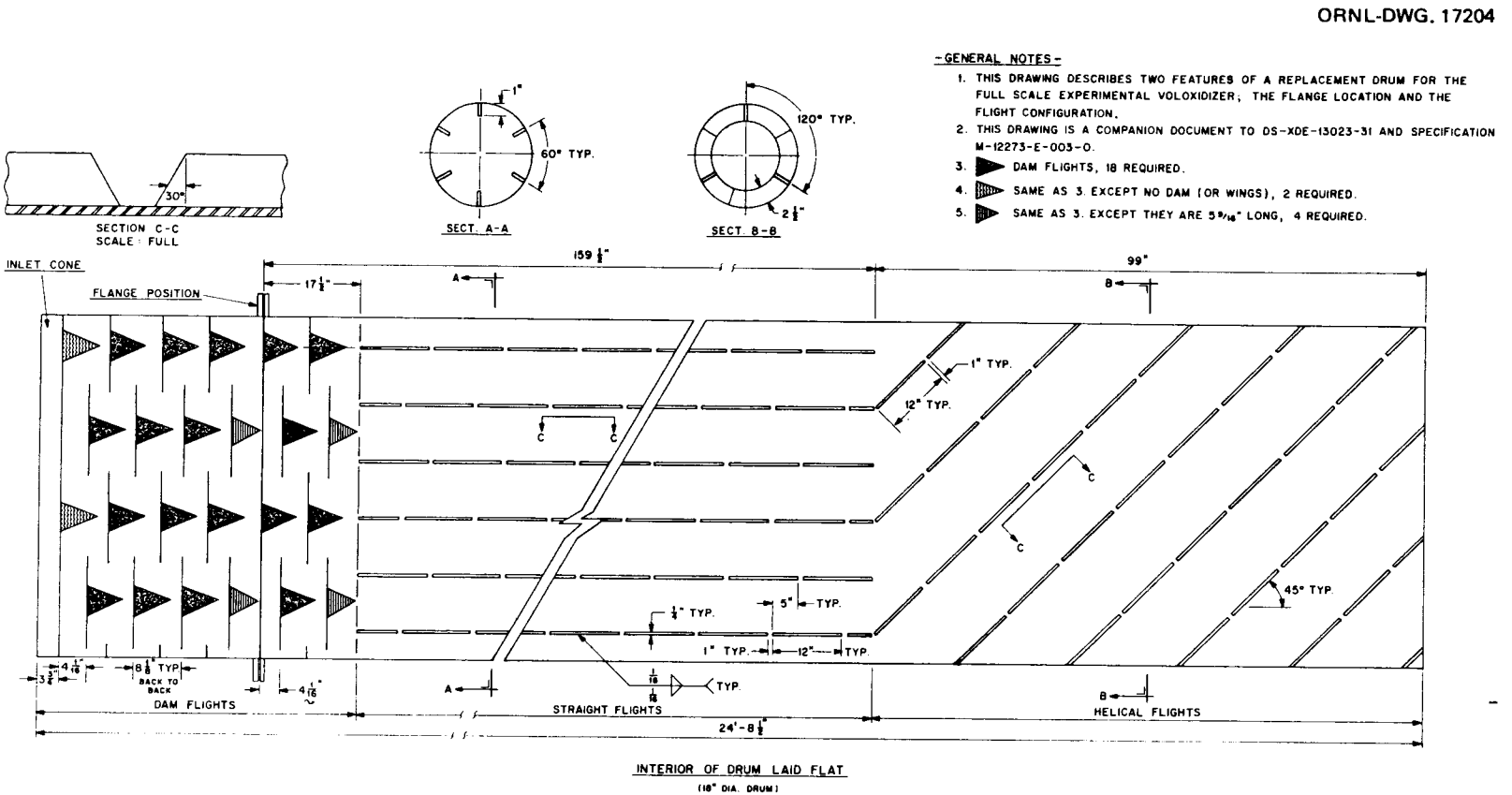

Fig. 1.1. Interior of drum laid flat showing configuration of mixing flights in each of the three sections.

sample weighed, the painted hulls separated and weighed, and the time of collection of the sample following tracer introduction recorded. These data describe a concentration-time curve which is equivalent to the RTD. Following the run, the inventory of the voloxidizer was removed and weighed. The mass of the holdup was 181.028 kg (398.26 lb).

2.2 Analysis of Experimental RTD

Execution of the experiment, as described in the previous section, gives four replications of the same run; that is, four experimental RTDs at the same operating conditions. The input of tracer could be described as a square wave of unit height. However, since the duration of the tracer wave is short in comparison to the spread in the output distribution (as will be shown later by the data), then, with negligible error, the input function can be considered to be an impulse or Dirac delta function. Time, in the concentration-time data, is adjusted to correspond with the delta function occurring in the center of each square wave.

The closed vessel dispersion model is assumed to be a good representation of the voloxidizer. A single parameter, **D**, can be used to describe the RTD. A method of calculating a value of **D** from the moments of the experimental concentration-time curve has been described by Van der Laan[5] and Levenspiel.[6]

The equations used to calculate the mean time (first moment) and variance (second moment) from the data are

$$\bar{t} = \frac{\int_0^\infty tCdt}{\int_0^\infty Cdt} \tag{1}$$

and

$$\sigma^2 = \frac{\int_0^\infty t^2 Cdt}{\int_0^\infty Cdt} - \bar{t}^2 \tag{2}$$

respectively. For the purpose of calculation, these equations were rewritten in discrete form. The dispersion number for the closed vessel model is related to the mean time and variance by the implicit formula,

$$\frac{\sigma^2}{\bar{t}^2} = 2\mathbf{D} - 2\mathbf{D}^2 \left[1 - e^{-1/\mathbf{D}}\right] . \tag{3}$$

A computer code was written to calculate values of the moments and to extract a value of **D** from Eq. (3) by trial and error. Table 2.1 is a summary of the calculational results obtained from analysis of the present data. Wen and Fan[7] present the solution to the differential

Table 2.1. Calculated results

Run	Color	$\bar{t}$ (min)	σ (min)	D
1	White	88.42	16.02	0.0167
2	Red	87.58	16.32	0.0177
3	Blue	85.54	15.95	0.0177
4	Yellow	86.50	15.49	0.0163
Average		87.01 ± 1.26	15.95 ± 0.34	0.0171 ± 0.0007

equation describing dispersive flow with closed vessel boundary conditions. A comparison of the experimental concentration-time data with the effluent concentration calculated using the inferred value of **D** is shown for run 1 in Fig. 2.1. [In the figure, normalized concentration, $C(\theta)$, is plotted as a function of dimensionless time, θ.] Although the data are scattered, the computed dispersion numbers are consistent.

Visual observation indicated that the velocity of solids in the inlet and discharge sections, where the drum is fitted with dam (triangular) and helical flights, respectively, is high (i.e., short residence time and low inventory) and that the solids travel in slug flow.

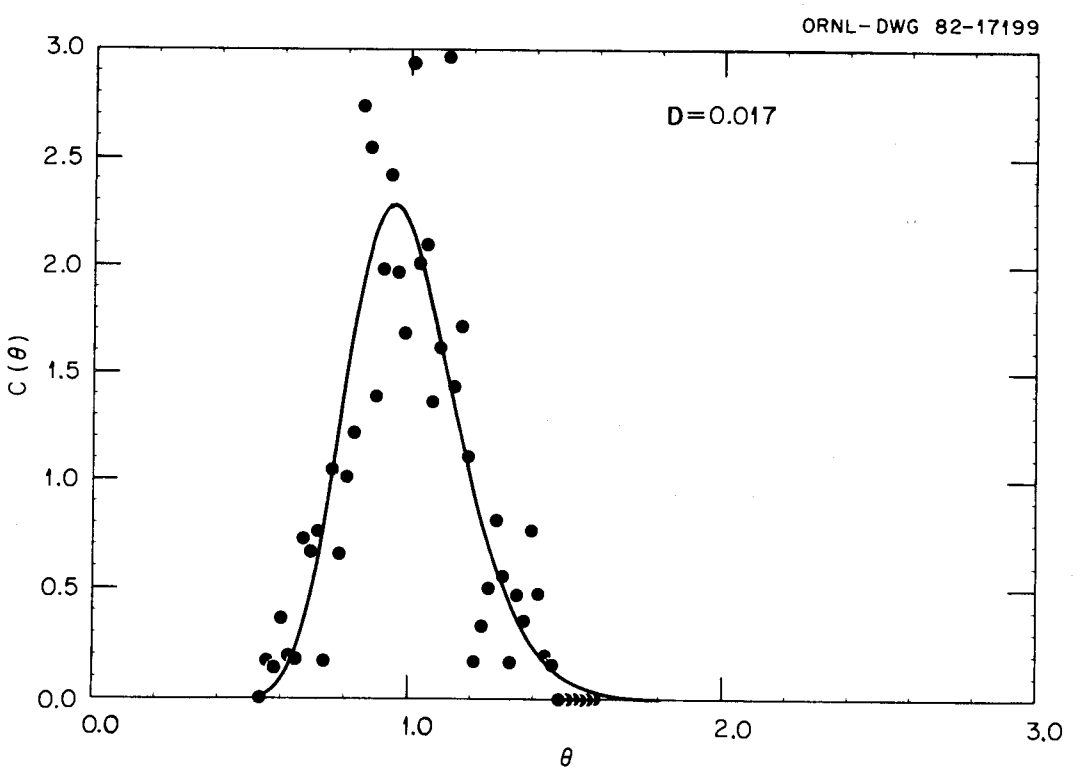

Fig. 2.1. Experimental and calculated effluent concentrations for run 1.

Thus, significant dispersion of solids only occurs in the furnace section, which is fitted with straight flights and where the residence time is large. For the purpose of these RTD studies, the drum is assumed to be essentially 3.61-m (11.83-ft) long, equipped with straight flights. This assumption permits comparison between these data and data obtained by Welch.[2] Those earlier data have been correlated[8] by the expression

$$W_N = \frac{2\pi D}{\omega d^2} = 0.0322 \left[\frac{s/d}{1 - s/d}\right]^{0.7455} f^{-0.252} \quad . \tag{4}$$

The characteristic size of the feed material, s, is taken to be the length of the sheared rod, in this case, 2.54 cm (1 in.). Ignoring the presence of the mixing flights, which are small in cross-section, the fraction of the drum filled can be calculated by

$$f = \frac{\mathrm{I}}{\omega d^2 L \rho} \quad . \tag{5}$$

Combining the definition of the dispersion number,

$$\mathbf{D} = \frac{D}{uL} \quad , \tag{6}$$

and the definition of bulk velocity,

$$u = L/\bar{t} \quad , \tag{7}$$

with Eq. (4) yields

$$\mathbf{D} = \frac{W_N \omega d^2 \bar{t}}{2\pi L^2} \quad , \tag{8}$$

providing a means to calculate a value of the dispersion number from the correlation. A summary of the calculation is given in Table 2.2. The fraction of the drum filled was smaller than prototypical (0.0782 vs 0.0849), which is a result of the slope being steeper than prototypical as previously mentioned. The measured dispersion number of 0.0171 is ~17% lower than that given by the correlation (i.e., 0.0207). This difference is not surprising since the correlation was based on data having about the same range of error. Therefore, it appears that the correlation can be used for predicting the magnitude of dispersion in voloxidizers up to 45.72 cm (18 in.) in diameter.

Table 2.2. Summary of basis for and calculation of expected dispersion number

Quantity	Value	Determined by
Characteristic feed size, s	2.54 cm (1 in.)	Measurement
Diameter of drum, d	45.72 cm (18 in.)	Measurement
Effective length of drum, L	3.61 m (11.83 ft)	Measurement
Slope of drum, S	7.23×10^{-3} m/m (0.0867 in./ft)	Measurement
Drum inventory, I	181.028 kg (398.3 lb)	Measurement
Density of feed material, ρ	3 910 kg/m^3 (243.6 lb/ft^3)	Measurement
Drum rotational speed, ω	4π rad/min (2.0 rpm)	Measurement
Fraction full, f	0.0782	Experimental data and Eq. (5)
Watt number, W_N	0.00740	Experimental data and Eq. (4)
Dispersion number, **D**	0.0207	Eq. (8)
	0.0171	Analysis of experimental RTD

2.3 Extension to Prototypical Conditions

Another convenient dimensionless group for characterizing solids flow in a rotary calciner is the velocity number,[3]

$$U_N = \frac{u}{\omega d S} = \frac{L}{\bar{t}\,\omega d S} \quad . \tag{9}$$

Substitution of the appropriate values gives $U_N = 0.999$ for the present set of experimental conditions. Previous studies indicated that the velocity number is nearly constant and in the range of 0.75 to 0.80. The difference in the present value is on the verge of being substantial. However, since U_N is constant, a decrease in rotational speed, ω, is compensated for by a corresponding increase in $\bar{t}$ and vice versa, all other parameters remaining constant. Equation (4) shows that W_N depends on the degree of fill of the drum and the ratio, s/d. Together with Eq. (8), it can be seen that the dispersion number, **D**, will be the same at 1.0 rpm and a feed rate of 600 g/min as for 2.0 rpm and 1200 g/min. It is still necessary to compute how $\bar{t}$ changes. Again, since U_N is nearly constant, it is permissible to write

$$U_{N,1} = U_{N,2} \tag{10}$$

or

$$\frac{L_1}{\bar{t}_1 \omega_1 d_1 S_1} = \frac{L_2}{\bar{t}_2 \omega_2 d_2 S_2} \quad . \tag{11}$$

Letting variables with subscript 2 be prototypical values, the data reported here can be used to predict the mean time of solids passage at prototypical conditions. Thus, when $d_1 = d_2$ and $L_1 = L_2$, then

$$\bar{t}_2 = \frac{\omega_1 S_1 \bar{t}_1}{\omega_2 S_2} \quad . \tag{12}$$

The mean time under prototypical conditions is 241.4 min (4.02 h), which is sufficient to obtain a 95% tritium release.[1] If a larger mean time is required, it will be necessary to either increase the drum length, decrease the drum diameter, decrease the slope, decrease the rotational speed, or some combination of all four of these parameters as directed by Eq. (11).

3. SURGE CAPACITY AND INVENTORY PROFILE

In a fuel reprocessing plant, the voloxidizer could provide the capability for surge capacity between dissolution and shearing. Need for such capacity is envisioned in a case where the dissolver cannot accept any more feed material (because of some breakdown, etc.), but the shear must continue operation (e.g., complete the shearing of a hot fuel bundle already in the magazine). To implement such a strategy, both the quantity of material that the voloxidizer can collect and the location of this material within the voloxidizer should be known. The latter data will aid in determining the voloxidizer's axial cooling requirements to remove decay heat.

3.1 The Surge Tank Mode

The internal mixing flights in the rotary drum of the FSEV have been designed to cause beneficial solids flow patterns. As shown in Fig. 1.1, the entrance, furnace, and product cooler/discharge sections are equipped with dam (or triangular), straight, and helical flights respectively. The slope of the drum is such that the solids entrance is at a higher elevation than the discharge end. In the normal operating mode, the drum rotates in the forward direction. Solids entering the drum are motivated forward (i.e., in the direction from entrance to discharge) at high velocity by the dam flights, quickly reaching the straight flights. In the section equipped with straight flights, the solids move forward slowly. Upon reaching the section equipped with helical flights, the solids have imparted to them a high velocity and are pushed out of the machine.

The direction of rotation of the drum can be reversed. When the drum rotates in the reverse direction, it is called the surge tank mode. In this mode, solids entering the drum are pushed forward by the dam flights as before. The helical flights in the cooler/discharge section push the solids back, against the incline of the drum. Solids tend to accumulate in the center section fitted with straight flights. Of course, the length of time that the voloxidizer can be operated in this mode is limited. It is undesirable to allow the drum to fill beyond the point where solids begin spilling into the inlet breeching section or begin to discharge (resulting from run-over) when operated in this mode.

3.2 Experimentally Determined Surge Capacity

Two types of experiments were performed to test the surge capacity of the FSEV. The first type consisted of operating the FSEV in the surge tank mode during an experimental campaign, and the second was comprised of weighing the maximum attainable inventory.

The voloxidizer was operated in the surge tank mode twice during FSEV run 17. Both events were intended to demonstrate that the voloxidizer could stop discharging material while still accepting feed for a 6-h interval. The following feed rates were used throughout (unless otherwise indicated): hulls, 600 g/min; sand, 500 g/min; and shroud, 300 g/min. Compared to calculations based on data provided in the Appendix, it is clear that the hulls feed rate is slightly larger, on a volumetric basis, than would be anticipated and that the shroud feed rate is over three times the anticipated rate. The high feed rate of shroud was used to deliberately create conditions that favored material hang-up in the drum. The sand feed rate is over five times the quantity of fines that could reasonably be expected and was used to increase the probability of leakage of the fines into the breeching section. Both of these excessive feed rates were used to demonstrate that the voloxidizer can function in severe conditions. Data logged during the run were extracted from the magnetic tapes using the data analysis program, CRUNCH, described previously.[1] The program calculates net feed rates from weigh table readings and integrates these rates to obtain a value of mass inventory. Figure 3.1 presents appropriate data for this test.

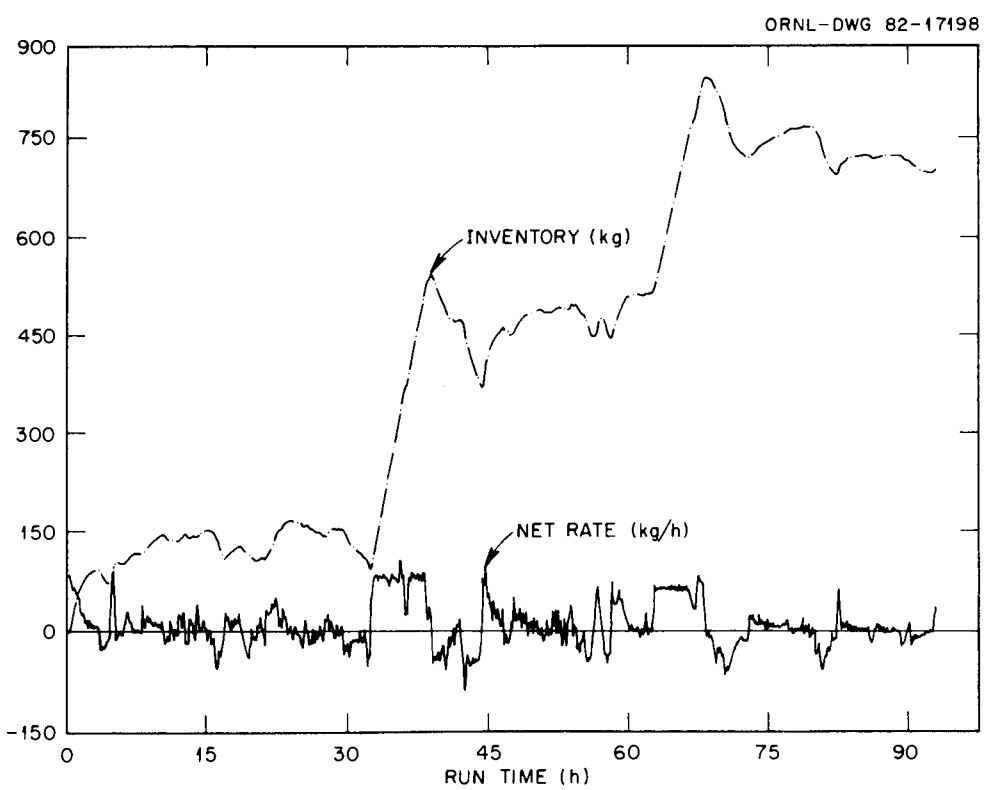

Fig. 3.1. History of net feed rate and drum inventory.

During the first experiment, in which drum rotation was reversed for 6 h, the mass inventory increased from 150.0 kg (330.0 lb) to 542.3 kg (1193.1 lb). Because of fluctuations in the feeding system, the inventory increase was less than the 504.0 kg (1108.8 lb) anticipated. No solids were spilled or discharged during the experiment, although the sound of metal scraping against metal was heard, probably caused by shroud pieces near the feed end being pushed across the stationary inlet chute. The drum was returned to forward rotation and began to discharge the accumulated material. Within 5 h the tipbucket (part of the feed system[1]) failed with the trap door being stuck in the open position, causing the feed system to become confused and to feed at a very high rate. This high feed rate caused the inventory to remain high even during forward rotation. Prior to the second experiment, the tipbucket was repaired and the shroud feeder turned off (i.e., shroud feed rate equals 0.0 g/min). However, since the inventory was already abnormally high, it rose to a peak of 842.2 kg and began discharging near the end of the second 6-h period. The beginning of discharge indicated that the surge capacity was being exceeded. These data indicate that the voloxidizer has a surge capacity of nearly 12 h even with abnormally high feed rates.

A second method of measuring the surge capacity consisted of beginning with the drum empty and feeding only hulls until the machine just began to run over or discharge. After measuring the bed depth, described in the next section, the contents of the drum were discharged and weighed. The inventory was found to be 731.07 kg (1608.4 lb). As shown in Sect. 2, a near prototypic feed rate (i.e., somewhat high) is 600 g/min of hulls and leads to a nominal inventory of 181.028 kg (398.26 lb). Thus, the expected surge capacity at nominal conditions is

$$\frac{731.07\ \text{kg} - 181.028\ \text{kg}}{0.6\ \text{kg/min}} = 916.7\ \text{min} \approx 15.3\ \text{h} \quad .$$

To be conservative, the voloxidizer should not be operated in the surge mode for more than half a day (12 h).

3.3 Inventory Profile

The inventory profile was measured for the surge tank condition. Only hulls were fed to the voloxidizer until the hulls began to discharge (run-over). The drum and feeders were then stopped, allowing the solids to settle within the drum. By turning the drum a few degrees in the forward direction, the solids assumed the geometry depicted in Figs. 3.2 and 3.3, insofar as the naked eye could discern. Looking into the drum from the discharge side, it could be seen that the solids bed depth increased from zero at the discharge to some large value at the point where the helical and straight flights meet. In the furnace section, which is equipped with straight flights, the solids appeared to form a "pool" in which the surface of the solids was horizontal. The dam flights in the inlet section obscured the view, and the solids could not be seen. However, because the dam flights are bulky (taking up much of the drum volume) and move material forward quickly, the quantity of material in this section is probably small.

An instrument made of $1\frac{5}{8}$-in. square unistrut was fabricated to aid in measuring the bed depth. The measurement technique is shown schematically in Fig. 3.2. The instrument

ORNL-DWG 82-17203

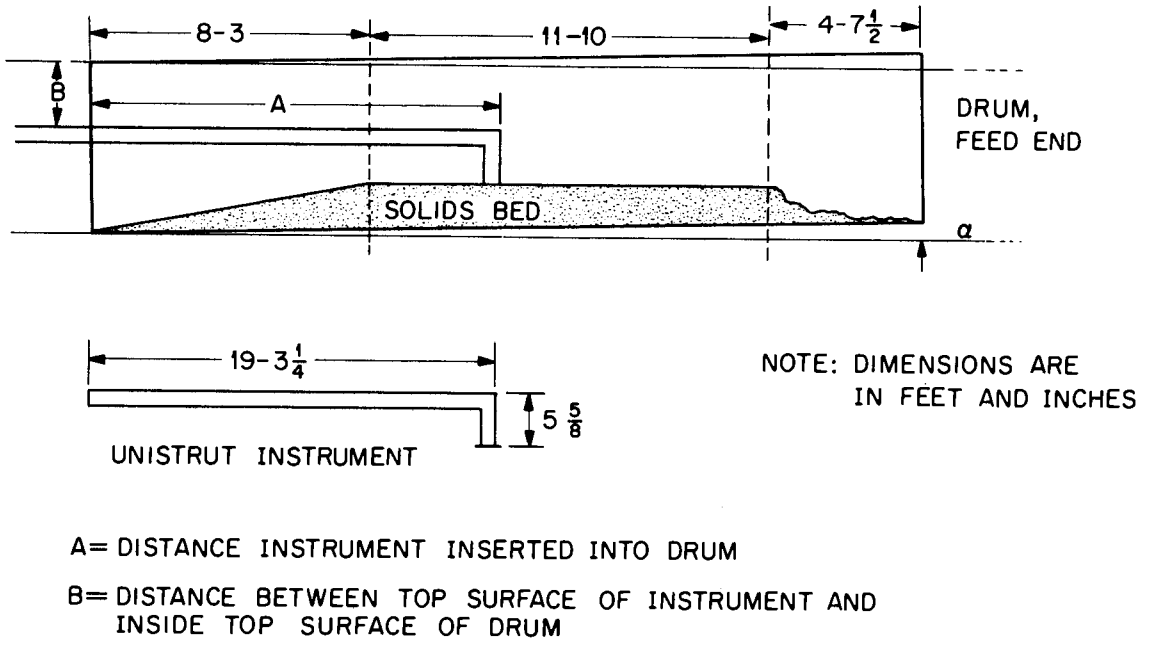

A= DISTANCE INSTRUMENT INSERTED INTO DRUM

B= DISTANCE BETWEEN TOP SURFACE OF INSTRUMENT AND INSIDE TOP SURFACE OF DRUM

Fig. 3.2. Drum, instrument, and measurement technique for determining bed depth.

ORNL-DWG 82-17202

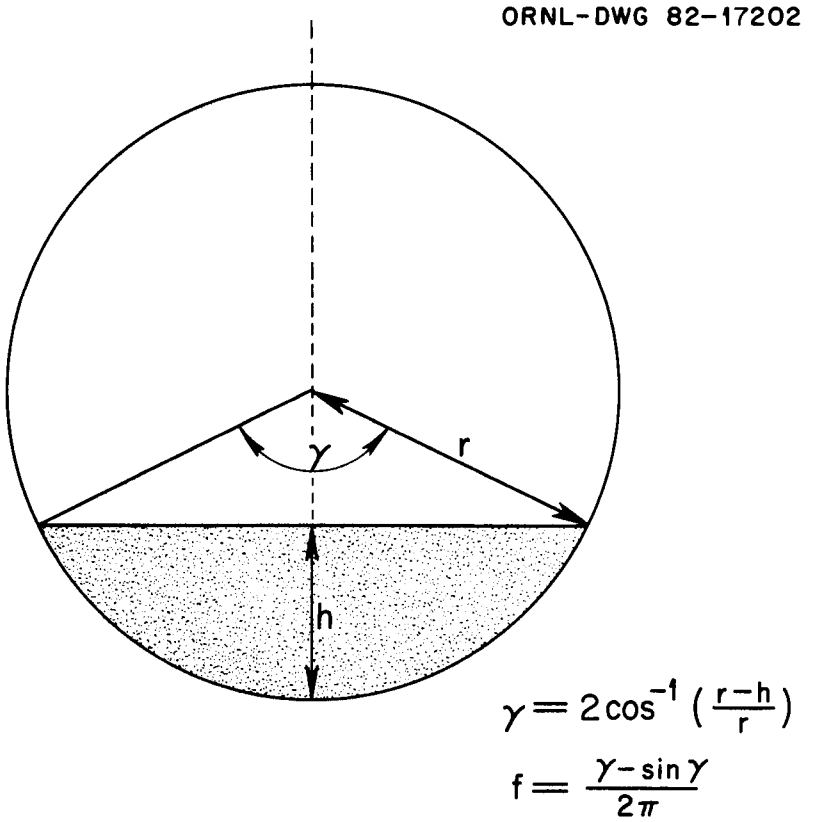

Fig. 3.3. Geometry used in calculating fraction of drum cross-section filled with solids.

was inserted into the drum a distance, A, and the "foot" of the instrument was allowed to come to rest on the surface of the solids bed. Using a bubble level, the length of the instrument was adjusted to be in a horizontal position where measurement B was made. As the distance A became greater, on each subsequent measurement, sag in the unistrut instrument became noticable, generating a source of error in the measurement. The data are given in Table 3.1. Both A and B are dependent upon the slope of the drum according

Table 3.1. Measurement of solids bed depth in surge tank condition

A (cm)	B (cm)	h^a (cm)	f^b dimensionless
0		0	0
30.48	25.40	5.81	0.074
60.96	23.81	7.18	0.101
91.44	21.59	9.18	0.143
121.92	20.00	10.55	0.175
152.40	19.69	10.65	0.177
182.88	18.10	12.01	0.210
213.36	17.46	12.43	0.220
243.84	17.15	12.53	0.222
274.32	17.78	11.67	0.201
304.80	17.46	11.77	0.204
335.28	19.05	9.96	0.161
365.76	19.05	9.74	0.156
396.24[c]	20.64	7.93	0.116
426.72[c]	20.00	8.35	0.125
457.20[c]	18.10	10.03	0.162
487.68[c]	24.13	3.78	0.039

[a]From Eq. (10).
[b]From Eq. (14).
[c]Sag in unistrut instrument becoming noticeable to the naked eye.

to the geometry shown in Fig. 3.2. Since the slope of the drum is small (0.0867 in./ft or 7.23×10^{-3} rad), the relative correction to A is negligible and is large for B. Therefore, the bed depth, h, at position A is very well approximated by

$$h = 45.72 - [B + 14.29 + A \tan \alpha] \cos \alpha \quad , \tag{13}$$

where A and B must be expressed as centimeters. Results of this calculation are also given in Table 3.1. Given the bed depth, the fraction of the drum's cross-section filled with solids can be calculated by

$$f = \frac{\gamma - \sin \gamma}{2\pi} \quad , \tag{14}$$

where

$$\gamma = 2\cos^{-1}\left(\frac{r-h}{r}\right) \quad , \tag{15}$$

as shown in Fig. 3.3. Results of this calculation also appear in Table 3.1. Values of f should prove the most useful since f measures the fullness of the drum and does not depend on the density of the solid material.

A second method of obtaining the inventory profile was to remove the solids and weigh them. The material was removed in 30.48-cm (1-ft) increments, and the data are given in Table 3.2. Since the density of the solids is known, the fraction of the drum filled can be calculated by

$$f \approx \frac{M}{\pi r^2 \Delta L \rho} \quad . \tag{16}$$

Results of the calculation appear in Table 3.2. The values of f correlate closely with the pointwise values obtained by the first method.

Table 3.2. Inventory removed from drum stopped in surge tank condition

Distance into drum (cm)		Mass of solids removed (kg)	Cumulative (kg)	f^a (dimensionless)
From	To			
0	30.48	6.597	6.597	0.034
30.48	60.96	18.557	25.154	0.095
60.96	91.44	28.917	54.071	0.148
91.44	121.92	33.231	87.302	0.170
121.92	152.40	33.725	121.027	0.173
152.40	182.88	37.998	159.025	0.195
182.88	213.36	45.740	204.765	0.234
213.36	243.84	44.192	248.957	0.226
243.84	753.11	482.11	731.07	0.150

[a]Mean over indicated interval.

Measurements of the bed depth can be used to calculate the solids inventory. Because h [in Eq. (15)] is a function of position, f [in Eq. (14)] is a function of position. The inventory can then be calculated as

$$I = \pi r^2 \rho \int_0^L f(x)dx \quad . \tag{17}$$

Equations (14) and (15) were substituted into Eq. (17) which was subsequently integrated numerically. In Table 3.1, values of h, used as input to the integration, consisted of the first nine entries (which are data probably not appreciably affected by the measurement error discussed earlier), and from the ninth entry, values of h decreased in magnitude according to the slope of the drum. The integration was carried out for values of L up to 612.14 cm (where the straight and dam flights come together).

Calculated and measured cumulative mass inventories for the discharge section are shown in Fig. 3.4 and agree closely. The calculated mass of 684.52 kg (1505.9 lb) retained

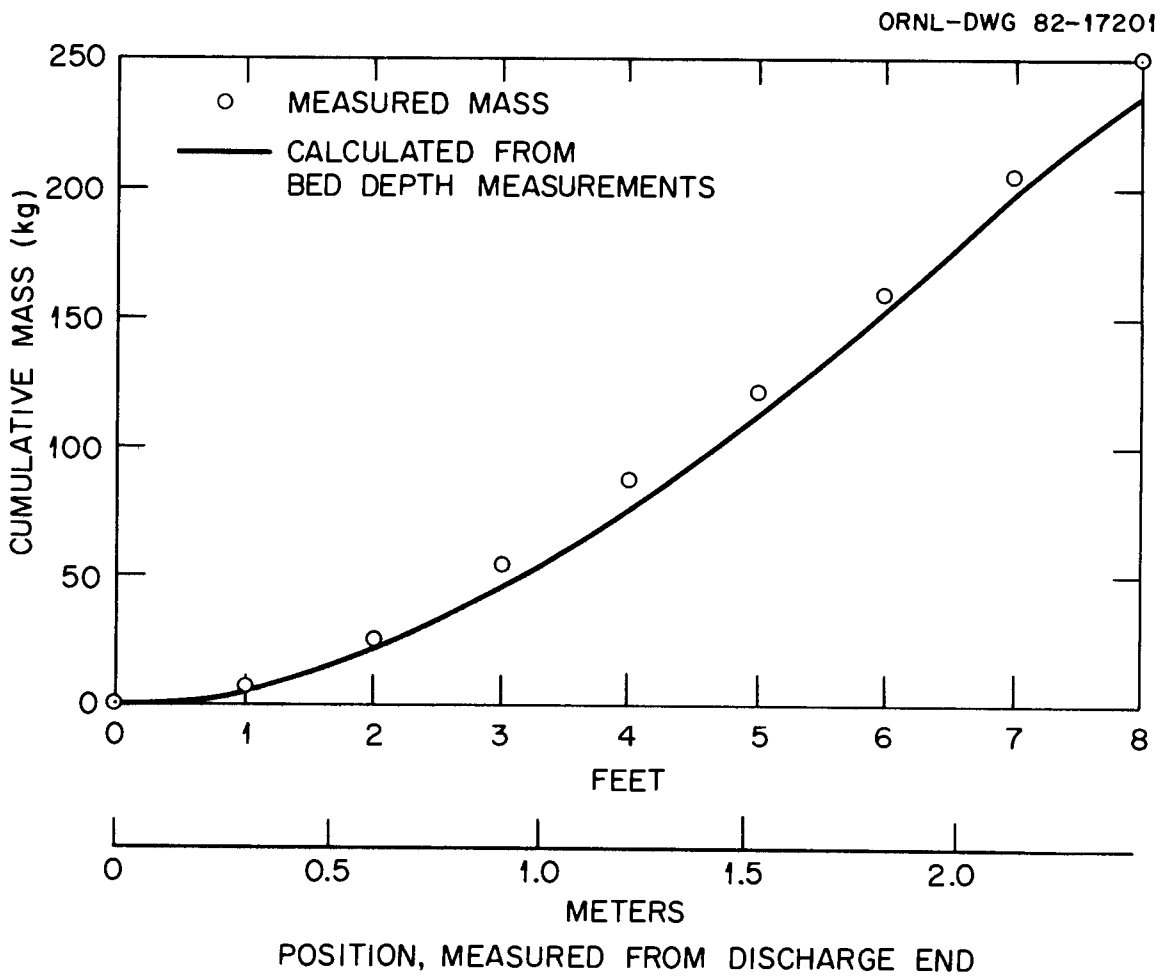

Fig. 3.4. Cumulative mass inventory profile for the discharge section when operated in surge tank mode.

in the furnace and discharge sections is smaller than the total measured mass of 731.07 kg (1608.4 lb), which indicates that 46.55 kg (102.4 lb) of hulls were retained in the entrance section, and which is intuitively reasonable. Thus, the postulated inventory profile for inventory during surge tank operation, shown in Fig. 3.5, appears correct.

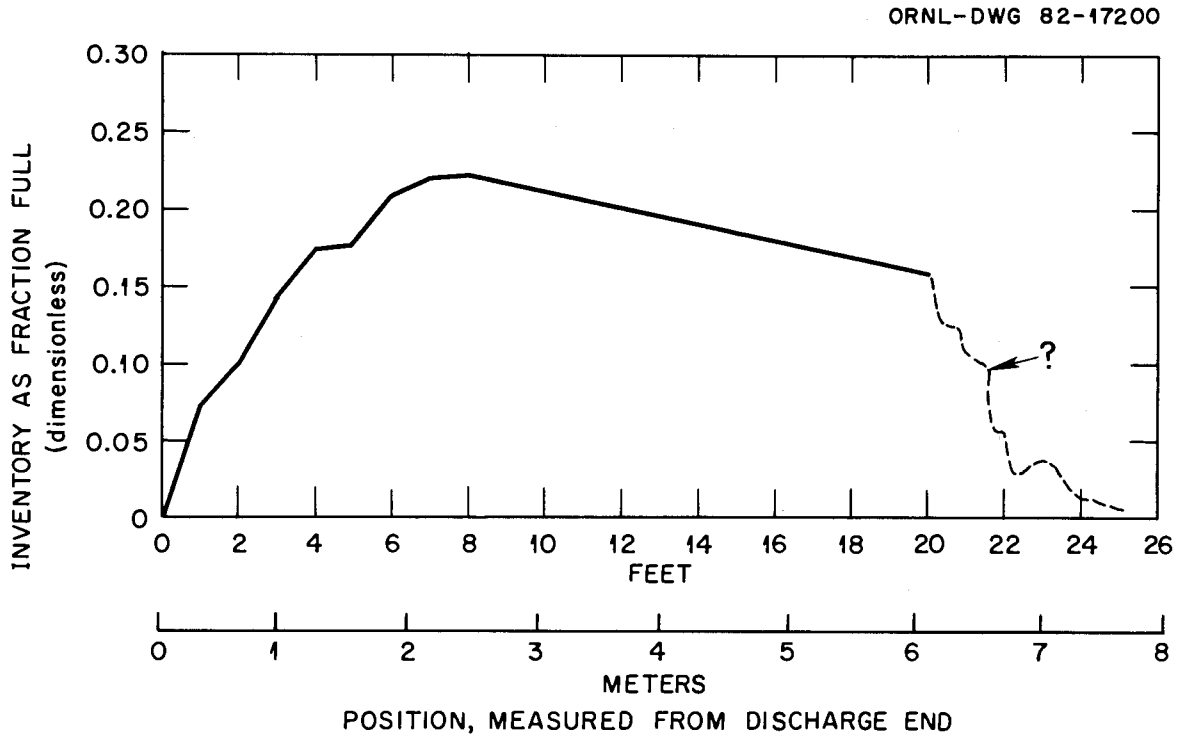

Fig. 3.5. Inventory profile for the entire drum when operated in surge tank mode.

4. OPERATION AT PROTOTYPICAL AND HIGHER FEED RATES

The maximum rate at which the voloxidizer may be fed solid material has a bearing on plant operation, particularly during certain upset conditions. For example, the shear may be required to cut a particularly hot fuel assembly and because of insufficient cooling (for whatever reason), it would have to cut and discharge the fuel as fast as possible. (This problem is different from the one described in Sect. 3 in that discharge to the dissolver may continue.) It is desirable to know ahead of time whether such an event would upset the voloxidizer's mechanical operation. Such an upset may conceivably result from jamming of the drum so that it would not rotate or from excessive spills from the drum feed end into the breeching section. However, it is practical to first observe how the voloxidizer performs at prototypical feed rates.

4.1 Nominal Feed Rates

Six experimental campaigns were performed with the Full-Scale Experimental Voloxidizer (FSEV) following installation of the prototypical drum described in Sect. 1.2. In the experimental programs, the feed rates were varied to test certain aspects of operation and considerable operating time at near prototypical feed rates was accumulated with no problems with the FSEV. Run 16, which was 106 h in duration, was run entirely at the prototypical feed rates of 600 g/min for hulls, 100 g/min for sand, and 100 g/min for shroud. Special effort was made to measure the quantity of any material spilled into the

breeching section. The total quantity of solids spilled was 0.300 kg (0.660 lb) of sand including the dust swept from the internal surface of the breeching section following the run. A solids recirculating system, described previously,[1] was subsequently designed and installed to return such solids to the drum. No other problems were encountered.

4.2 High Feed Rates

Determining the maximum feed rate that the voloxidizer may accept is not straightforward. An empty drum can accept a higher feed rate than one that already has an appreciable inventory. That is, the maximum allowable feed rate is variable and diminishes with increasing inventory. So, during operation, a large increase in feed rate could be tolerated for a short period of time and would have to be decreased as time and inventory increases. Because of these inherent difficulties, it was decided that experiments could be performed to determine how the machine would react to large feed rates over an extended time interval.

In FSEV run 20, the effective feed rates were varied by varying both the feed rate and rotational speed as shown in Table 4.1. The base or beginning feed rate shown is ~67% greater than the prototypical feed rate. The equivalent feed rate was then effectively doubled

Table 4.1. Solids feed rates for run 20

Run-time interval	Drum speed (rpm)	Feed rates (g/min)		Effective feed rates[a] (g/min)	
0–42	1.0	Hulls	600	Hulls	600
		Sand	200	Sand	200
		Shroud	200	Shroud	200
		Total	1000	Total	1000
42–60	0.5	Hulls	600	Hulls	1200
		Sand	200	Sand	400
		Shroud	200	Shroud	400
		Total	1000	Total	2000
60–75	0.5	Hulls	900	Hulls	1800
		Sand	300	Sand	600
		Shroud	300	Shroud	600
		Total	1500	Total	3000
75–95	1.0	Hulls	600	Hulls	600
		Sand	200	Sand	200
		Shroud	200	Shroud	200
		Total	1000	Total	1000
95–106	1.0	Total	0	Total	0

[a]Normalized to 1.0 rpm.

by halving the rotational speed at a run time of 42 h. At a run time of 60 h, the feed rate was increased by 50% causing the rate to be three times as great as the starting rate, which corresponds to about five times the prototypical rate. After 5 h of operation at this rate (i.e., run time of 65 h), solids began to spill from the drum into the inlet breeching section. These solids consisted of both sand and hulls. According to the inventory accumulated, this spillage occurred earlier than expected. This early spillage was probably caused by the inlet flights not being able to move solids away from the entrance fast enough at 0.5 rpm. The inventory history can be followed from the data shown in Fig. 4.1. At a run time of

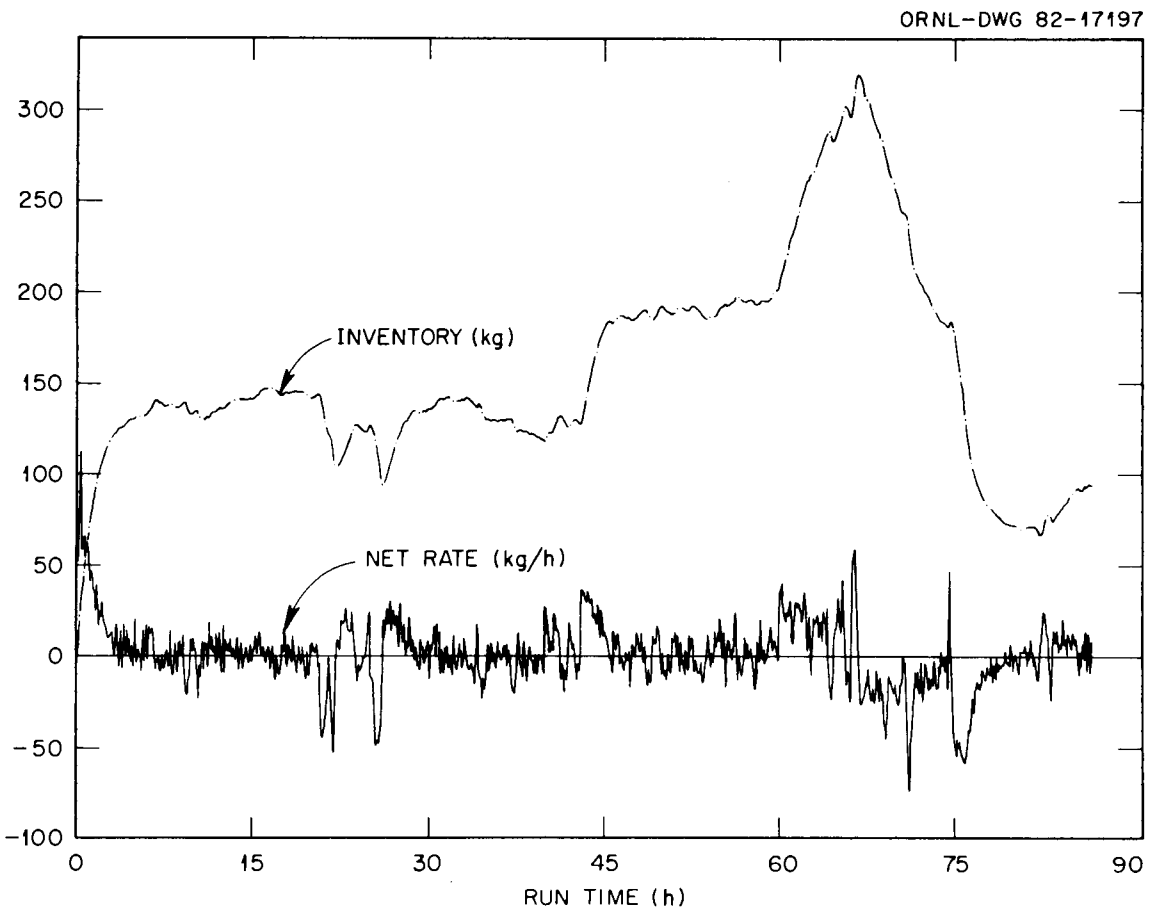

Fig. 4.1. Net feed rate and solids inventory in drum; run-time, 0 to 87 h.

66 h, the shroud feeder failed and was out of service for several hours. However, the interesting data had already been collected. The data show that a very conservative figure for the maximum feed rate is five times the prototypical rate and can be maintained for 5 h.

5. CONCLUSIONS

The following conclusions can be drawn from this study:

1. The intensity of dispersion of hulls in the Full-Scale Experimental Voloxidizer (FSEV) is well described by a dispersion number of 0.0171, which agrees closely with a previously developed correlation.
2. The mean time of solids passage through the FSEV is sufficient for the reaction to reach completion.
3. Surge capacity of the FSEV is 12 h, without discharge, at prototypic feed rates.
4. The inventory profile (i.e., depth) of the solids in the furnace section during surge tank operation varies according to the slope of the drum, much as a pool of liquid would.
5. The voloxidizer is expected to perform well at prototypic feed rates and may be operated at five times the nominal feed rate for periods up to 5 h.

REFERENCES

1. B. B. Spencer, T. D. Welch, and M. E. Whatley, *Description of a Full-Scale Experimental Voloxidizer Facility*, ORNL-5924, to be published.

2. T. D. Welch (Oak Ridge National Laboratory), unpublished work.

3. M. E. Whatley, *A Dimensional Analysis of Solids Transport and Dispersion in a Rotary Kiln*, ORNL/TM-5898 (July 1977).

4. B. B. Spencer and M. E. Whatley, *Mathematical Model of Axial Heat Transfer in a Rotary Calciner and Heat Transfer Studies in a 6.5-in.-diam Calciner*, ORNL-5937, to be published.

5. E. Th. Van der Laan, *Chem. Eng. Sci.*, 7, pp. 187–91 (1957).

6. O. Levenspiel, *Chemical Reaction Engineering*, 2nd ed., Wiley, New York, 1972, pp. 253–314.

7. C. Y. Wen and L. T. Fan, *Models for Flow Systems and Chemical Reactors*, Marcel Dekker, Inc., New York, 1975, pp. 113–43 and pp. 468–81.

8. M. E. Whatley (Oak Ridge National Laboratory), personal communication to B. B. Spencer, June 9, 1982. Information may also be found in *Scaling Voloxidizers from the Reference 0.5-t/d Size to Larger Fuel Reprocessing Plants: An Interim Study*, internal document (October 1978).

NOMENCLATURE

A	distance into drum as measured from discharge end, cm (see Fig. 3.2)
B	measured distance between top surface of tool and inside top surface of drum, cm (see Fig. 3.2)
C	concentration, kg/m^3
$C(\theta)$	concentration, $\bar{t}\,C/\int_0^\infty C dt$, dimensionless
d	diameter of drum, m
D	dispersion coefficient, m^2/s
D	dispersion number, D/uL, dimensionless
f	fraction of drum volume filled with solids, dimensionless
h	bed depth, cm
I	inventory, kg
L	length, m
M	mass, kg
r	radius, $d/2$, m
rpm	revolutions per minute
s	characteristic size of solids feed particle, m
S	slope of drum, m/m, dimensionless
t	time, s
$\bar{t}$	mean time, s
u	velocity, m/s
U_N	velocity number, $u/\omega dS$, dimensionless
W_N	watt number, $2\pi D/\omega d^2$, dimensionless
x	axial position, m

Greek Letters

α	slope of drum, rad
γ	fill angle, rad (see Fig. 3.3)
Δ	a change or increment in a variable
θ	dimensionless time, $t/\bar{t}$
π	3.141592654
ρ	bulk density of solid feed material, kg/m^3
σ	standard deviation or square root of variance, s
ω	rotational speed, rad/s

APPENDIX

CALCULATION OF SOLIDS FEED RATES NORMALIZED ON A VOLUMETRIC BASIS

Material flow rate in a plant processing 0.5-t/d of heavy metal can be estimated from the physical properties of individual components and dimensions of a single "slice" of a fuel element. The mass flow rate of stand-in fuel (inert material) will be different for the same volumetric flow rate. The calculations performed below, in worksheet form, for Clinch River Breeder Reactor (CRBR) fuel are:

DATA: dimensions of sheared shroud –

perimeter, P = 40.64 cm (16 in.)
length, l_{sh} = 2.54 cm (1 in.)
thickness, t_{sh} = 0.318 cm (0.125 in.)

dimensions of sheared rod (hull) –

outside diameter, d_h = 0.584 cm (0.23 in.)
wall thickness, t_w = 0.0381 cm (0.015 in.)
length, l_h = 2.54 cm (1 in.)

dimensions of sheared wire wrap –

outside diameter, d_w = 0.142 cm (0.056 in.)
length, l_w ≈2.54 cm (1 in.)

specific gravity –

UO_2, ρ_u = 10.96 g/cm^3
304 L stainless steel, ρ_s = 8.03 g/cm^3

molecular weight –

UO_2, $\bar{M}_{UO_2}$ = 270
U, $\bar{M}_U$ = 238

void fraction of randomly packed sheared fuel rods*,

v = 0.57

Calculate mass of one hull, M_h –

mass of UO_2 in hull, $M_{UO_2} = \frac{\pi}{4}(d_h - 2t_w)^2\ l_h\ \rho_U$ = 5.64 g

mass of steel in hull, $M_s = \frac{\pi}{4}[d_h{}^2 - (d_h - 2t_w)^2]\ l_h\ \rho_s$ = 1.33 g

$M_h = M_{UO_2} + M_s$ = 6.97 g

*From S. D. Clinton and R. L. Cox, *The Effective Thermal Conductivity of Sheared Prototype LMFBR Fuels*, ORNL/TM-3772 (February 1973).

Specific gravity of a hull, $\rho_h = M_h / \frac{\pi}{4} d_h^2 \; l_h = 10.25 \text{ g/cm}^3$

Mass of U in one hull, $M_U = M_{UO_2} \dfrac{\bar{M}_U}{\bar{M}_{UO_2}} = 4.97 \text{ g}$

Mass of shroud associated with one hull –

$$M_{sh} = 1/217 \, (P \, l_{sh} \, t_{sh}) \rho_s = 1.22 \text{ g}$$

Mass of wire associated with one hull, $M_w = \frac{\pi}{4} d_w^2 \; l_w \rho_s = 0.32 \text{ g}$

Total mass associated with one hull, $M_{tot} = M_h + M_{sh} + M_w = 8.51 \text{ g}$

Total mass throughput for a 0.5-t/d plant:

$$\bar{M} = \frac{500 \text{ kg}}{\text{d}} \; \frac{1000 \text{ g}}{\text{kg}} \; \frac{\text{d}}{24 \text{ h}} \; \frac{\text{h}}{60 \text{ min}} \; \frac{M_{tot}}{M_U} = 595 \text{ g/min}$$

and this material has an average density of:

$$\bar{\rho} = M_{tot} / \left(\frac{\pi}{4} d_h^2 \; l_h + \frac{1}{217} \, P l_{sh} \, t_{sh} + \frac{\pi}{4} d_w^2 \; l_w \right) = 9.76 \text{ g/cm}^3$$

Assuming all the material can be simulated by sheared stainless steel rod, 0.635-cm (0.25-in.) outside diameter, the equivalent mass flow rate for this simulated fuel material is

$$M_{eq} = \bar{M} \left(\frac{\rho_s}{\bar{\rho}} \right) = 490 \text{ g/min} \; .$$

This last calculation has assumed that the packing factor or void fraction is the same for both sheared fuel and sheared steel rod.

ORNL/TM-8493
Dist. Category UC-86
(Applied)

INTERNAL DISTRIBUTION

1. R. L. Anderson
2. S. M. Babcock
3–5. W. D. Burch
6. R. V. Clark
7. D. J. Crouse
8. M. J. Feldman
9. W. S. Groenier
10. W. D. Holland
11. R. T. Jubin
12. H. T. Kerr
13. E. H. Kreig, Jr.
14. B. E. Lewis
15. S. A. Meacham
16. J. G. Morgan
17. R. E. Norman
18. R. L. Philippone
19. W. W. Pitt
20. R. T. Primm
21. J. W. Roddy
22. T. W. Semple
23. J. H. Shaffer
24–28. B. B. Spencer
29. J. G. Stradley
30. T. D. Welch
31. M. E. Whatley
32. O. O. Yarbro
33. Manson Benedict (consultant)
34. A. Schneider (consultant)
35–36. Laboratory Records
37. Laboratory Records, ORNL-RC
38. ORNL Patent Office

EXTERNAL DISTRIBUTION

39–40. K. O. Laughon, Jr., Acting Director, Office of Spent Fuel Management and Reprocessing Systems, U.S. Department of Energy, Washington, DC 20545
41. F. P. Baranowski, 1110 Dapple Grey Court, Great Falls, VA 22066
42. S. J. Beard, Vice President, Engineering and Technology, Exxon Nuclear Company, Inc., 600 108th Avenue, N.E., C-00777, Bellevue, WA 98009
43. R. Little, Princeton Plasma Physics Laboratory, James Forrestal Campus, P.O. Box 451, Princeton, NJ 08544
44. J. L. McElroy, Pacific Northwest Laboratories, P.O. Box 999, Richland, WA 99352
45. M. J. Ohanian, Associate Dean for Research, College of Engineering, 300 Weil Hall, University of Florida, Gainesville, FL 32611
46. J. F. Proctor, Senior Technical Specialist, Petrochemicals Department, Atomic Energy Division, E. I. du Pont de Nemours and Company, Montchanin Building 6600, Wilmington, DE 19898
47. Office of Assistant Manager for Energy Research and Development, DOE-ORO, Oak Ridge, TN 37830
48–127. Given distribution as shown in TIC-4500 under UC-86, Consolidated Fuel Reprocessing Category (Applied)