H-204

OAK RIDGE NATIONAL LABORATORY LIBRARY

3 4456 0034040 5

ornl

NUREG/CR-3856
(ORNL/TM-9236)

OAK RIDGE NATIONAL LABORATORY

MARTIN MARIETTA

An Ultrasonic Level and Temperature Sensor for Power Reactor Applications

W. B. Dress
G. N. Miller

OAK RIDGE NATIONAL LABORATORY
CENTRAL RESEARCH LIBRARY
CIRCULATION SECTION
4500N ROOM 175
LIBRARY LOAN COPY
DO NOT TRANSFER TO ANOTHER PERSON.
If you wish someone else to see this report, send in name with report and the library will arrange a loan.
ORNL-119 (6-97)

Prepared for the
U.S. Nuclear Regulatory Commission
Under Interagency Agreement DOE 40-551-75

OPERATED BY
MARTIN MARIETTA ENERGY SYSTEMS, INC.
FOR THE UNITED STATES
DEPARTMENT OF ENERGY

Printed in the United States of America. Available from
National Technical Information Service
U.S. Department of Commerce
5285 Port Royal Road, Springfield, Virginia 22161

Available from

GPO Sales Program
Division of Technical Information and Document Control
U.S. Nuclear Regulatory Commission
Washington, D.C. 20555

This report was prepared as an account of work sponsored by an agency of the United States Government. Neither the United States Government nor any agency thereof, nor any of their employees, makes any warranty, express or implied, or assumes any legal liability or responsibility for the accuracy, completeness, or usefulness of any information, apparatus, product, or process disclosed, or represents that its use would not infringe privately owned rights. Reference herein to any specific commercial product, process, or service by trade name, trademark, manufacturer, or otherwise, does not necessarily constitute or imply its endorsement, recommendation, or favoring by the United States Government or any agency thereof. The views and opinions of authors expressed herein do not necessarily state or reflect those of the United States Government or any agency thereof.

NUREG/CR-3856
ORNL/TM-9236
Dist. Category AN

Instrumentation and Controls Division

AN ULTRASONIC LEVEL AND TEMPERATURE SENSOR FOR POWER REACTOR APPLICATIONS

W. B. Dress
G. N. Miller

Manuscript Completed: April 15, 1984

Date Published: August 1984

Prepared for the
U.S. Nuclear Regulatory Commission
Washington, DC 20555
Under Interagency Agreement DOE 40-551-75

NRC Fin No. B0401

Prepared by the
OAK RIDGE NATIONAL LABORATORY
Oak Ridge, Tennessee 37831
operated by
MARTIN MARIETTA ENERGY SYSTEMS, INC.
for the
U.S. DEPARTMENT OF ENERGY
under Contract No. DE-AC05-84OR21400

OAK RIDGE NATIONAL LABORATORY LIBRARY
3 4456 0034040 5

TABLE OF CONTENTS

	Page
ACKNOWLEDGEMENTS	v
ABSTRACT	vii
1. INTRODUCTION	1
2. PRINCIPLE OF OPERATION	3
3. INITIAL DEVELOPMENT AND EVALUATION	7
3.1 Test Equipment	7
3.2 Engineering Problems	
3.2.1 Propagation of Electrical Signals	8
3.2.2 Acoustic Attenuation	8
3.2.3 Flowing Water and Voids	10
3.2.4 Material Fatigue	12
3.2.5 Radiation Damage	12
3.2.6 Temperature Effects	12
3.2.7 Restoration of Torsional Signal	13
3.2.8 Method of Measurement	13
3.2.9 Vessel Penetration	16
3.3 Basic Acoustic Problems	16
3.3.1 Density and Level Relations	17
3.3.2 Curved Waveguides	19
3.3.3 Multisectioned Sensors	20
4. CONCLUSIONS	21
REFERENCES	22

ACKNOWLEDGEMENTS

The continuing interest of A. Hon of the NRC in this novel approach to level measurement is greatly appreciated. L. Lynnworth of Panametrics, Inc., who invented the torsional ultrasonic method, has shown continuing interest and has graciously provided assistance throughout the work.

To our colleagues in the I&C Division, R. L. Anderson, D. R. McNeilly, and S. C. Rogers, we extend special thanks and appreciation.

ABSTRACT

An ultrasonic waveguide employing torsional and extensional acoustic waves has been developed for use as a level and temperature sensor in pressurized and boiling water nuclear power reactors. Features of the device include continuous measurement of level, density, and temperature producing a realtime profile of these parameters along a chosen path through the reactor vessel.

The next step toward a practical level sensor for use in a reactor vessel should concentrate on nuclear qualification in a joint effort with a vender and a utility.

1. INTRODUCTION

A result of the post-TMI-2 studies was the Kemeny Commission mandate to the Nuclear Regulatory Commission (NRC) to "consider the need for additional instrumentation to aid in understanding of plant status."[1] Through the efforts of the TMI-2 Lessons Learned Task Force, the NRC recommended the installation of additional instrumentation (if required) to "provide unambiguous, easy-to-interpret indications of inadequate core cooling."[2] The Advisory Committee on Reactor Safeguards stated:[3]

> "The Committee believes that it would be prudent to consider expeditiously the provision of instrumentation that will provide an unambiguous indication of the level of fluid in the reactor vessel...."

Under normal operating conditions, a liquid level sensor located inside a reactor vessel would be exposed to temperatures up to 375°C, pressures to 15.2 MPa, and intense radiation fields. NRC requires that in-vessel instrumentation survive a "design-basis accident" and provide useful indications both during an excursion and afterward as well.

Some manufacturers of pressurized water reactors (PWRs) have specified that an in-vessel liquid level sensor must not be "event dependent;" the sensor must provide an indication that can be independently verified either by reference to other plant parameters or through "self-calibration." The post-TMI accident studies showed that instrumentation indicating a single and stationary liquid level reading of "full" throughout months of normal operation would be disregarded during an excursion. The desired alternatives are to provide liquid-level sensors utilizing diverse measurement principles or one sensor with multiple outputs such as the one described in this study.

The NRC then sponsored the evaluation of differential-pressure devices, heated-junction thermocouples, and ultrasonic torsional-wave sensors at Oak Ridge National Laboratory (ORNL). All of these approaches seemed promising solutions, and subsequent evaluation has developed and extended that promise. The remainder of this discussion will focus on the torsional-wave ultrasonic technique and how it can fulfill the requirements of the NRC and of the PWR vendors.

A liquid-level sensor system based on the ultrasonic technique is a promising long-term solution for monitoring core cooling adequacy because of its multiparameter capabilities: it can display temperature and density profiles along a chosen path through the reactor (including the core). The density data can be used to indicate voids (boiling), froth, and actual level as well as collapsed level.[4] Correlation of these parameters with the outputs of other plant sensors provides the desired event independence.

Compatibility with current reactor designs and the ability to perform under both normal and accident conditions is realized by the simple, all-metal construction of the sensor and by isolation of the transducer from the reactor core area. The remote location of the electronics and the absence of moving parts inside the reactor vessel contribute to the reliability of the probe and minimize maintenance requirements.

2. PRINCIPLE OF OPERATION

The principles of acoustic stress-pulse generation and propagation in waveguides are well known, and will be described only briefly here. Additional information and extensions to the techniques described here may be found in the references cited in this section.

The velocity of acoustic waves in an elastic medium is proportional to the square root of a restoring force (determined by the elastic constants) divided by an inertial term,[5]

$$v = \sqrt{(\text{stiffness})/(\text{inertia})} \ . \tag{1}$$

For the case of a rod in which the transverse dimensions are much smaller than the wavelength, the transverse strain is negligible, and the elastic modulus is Young's modulus, Y. The corresponding velocity of the extensional wave is

$$v = \sqrt{Y/\rho} \ , \tag{2}$$

where ρ is the sensor's density. If the medium supports shear, the appropriate elastic modulus is the modulus of rigidity or the shear modulus, G. The velocity of the torsional wave, for a rod of circular cross section, is given by

$$v = \sqrt{G/\rho} \ . \tag{3}$$

For a waveguide of noncircular cross section, Eq. 3 must be modified to reflect the property of a solid rod to buckle when twisted. The appropriate term is the torsional constant, J, and has units of area to the fourth power.[6] This torsional constant has the effect of increasing the stiffness. The correct expression for the torsional velocity is then

$$v = \sqrt{(G\ J)/(p\ I)} \ , \tag{4}$$

where I is the polar moment of inertia of the rod about the axis of shear. Spinner and Valore[7] related the torsional resonances of rectangular bars to the shear modulus by means of a shape factor, and gave an approximate formula for the ratio of I to J for bars of rectangular cross sections. Extending their idea to the general case results in

$$v = K\sqrt{G\ /\ p} \tag{5}$$

for the torsional velocity in an arbitrarily shaped rod, where K is a constant of unspecified shape dependence. For a circular cross section, K is unity and decreases as the shape departs from that of a circle.

Expressions for J, I, and K for some simple shapes can be obtained analytically in closed form (see the examples in ref. 6). Other shapes require complex computational methods to solve Poisson's equation numerically.

A current pulse in a coil surrounding a ferromagnetic rod creates a magnetic flux transient in the rod which causes a change in length (Joule effect).[8] This generates an acoustic pulse which propagates as an extensional wave within the rod. Conversely, a traveling stress pulse produces a local dimensional change (strain) which causes a change in magnetic flux in a ferromagnetic rod (Villari effect). This changing magnetic flux is detected by a coil placed on the rod.

In a similar manner, a sudden change in shear will generate a torsional wave. A shear stress can be produced magnetically by applying an azimuthal magnetic bias; the longitudinal magnetic pulse produced in the excitation coil will then interact with the azimuthal field, causing the rod to shear (Wiedemann effect).[9] The vector sum of the two magnetic fields is a rapidly growing, then diminishing helical field which produces a twisting strain in the rod. The torsional pulse is detected in a manner similar to the extensional pulse, the only difference being that an azimuthal magnetic bias is required at the pick-up coil also. There are other means of producing torsional waves, the most common being mode conversion.[10] Here, an extensional motion is coupled to the circumference of a rod, converting a longitudinal motion to a shear motion.

For a waveguide immersed in a fluid of density ρ, the extensional propagation is minimally affected, and there is a small loss of energy at the end of the rod due to the fluid which supports compressional-wave motion. However, the torsional motion of the rod can easily couple to the fluid, transferring both energy and momentum. Thus, not only will the velocity be diminished, but the amplitude will also be decreased due to viscosity effects. Lynnworth[11] incorporated the velocity reduction into an empirical formula by multiplying the velocity in air by

$$f = 1 + \frac{\rho_f}{2\rho_s}\left(1 - \frac{1}{K}\right), \tag{6}$$

where ρ_s is the density of the sensor, ρ_f is the fluid density, and K is defined in Eq. 5. This expression is valid only for sensors having rectangular cross sections and whose density is greater than the fluid density. Since $K < 1$, f is always less than 1, so the torsional velocity decreases upon immersion in a fluid. Note that a theoretically correct expression for f must also always be less than or equal to unity, since the case of coupling energy and momentum into the sensor from the surrounding fluid is not considered. Environmental noise could couple to the sensor, but signal averaging and frequency selection eliminate such effects.

Inspection of Eq. 4, in which inertial effects of the fluid are included in I, shows that the expression for the average density of the

fluid surrounding the sensor is proportional to the difference of the square of the transit times (inverse of the velocities) in and out of the fluid

$$\rho = \text{const}\ (t^2 - t_o^2)\ , \tag{7}$$

where t is twice the length of the sensor divided by the velocity of Eq. 4, and the subscript "o" refers to the value obtained in vacuum (or more practically, air).

The temperature dependence of the sensor is implicit since the density and length of the sensor material are temperature dependent, as are the elastic moduli. The method of temperature correction is as follows: A careful calibration of the temperature dependence of the extensional and torsional transit times is obtained for a particular piece of probe material. To measure density, the extensional transit time is obtained and the temperature is inferred and used to correct the torsional data.

3. INITIAL DEVELOPMENT AND EVALUATION

The previous work by Arave[12] and Lynnworth[13] demonstrated the potential for application of the ultrasonic waveguide technique to power-reactor instrumentation. Prior work done at ORNL[14-15] identified a number of specific questions pertaining to the instrumentation needs, the physical structure, and the environment of a nuclear reactor.

These questions involve both the problems of acoustic generation and propagation of ultrasound in waveguides (basic problems), and those being concerned with a particular application (engineering problems). The initial concerns in each category will be discussed below, and the secondary problems that arose will be examined.

3.1 TEST EQUIPMENT

To carry out the tests necessary for a prototype instrument, means for optimum stress-pulse generation and accurate time-interval measurement needed study. A pulser for generating the acoustic stress waves in the magnetostrictive material was designed and built. Capable of producing pulses up to 20 A with variable widths from 2 to 20 μs, the pulser was able to saturate magnetically the transducer material. Thus the maximum possible stress pulses were generated in both the nickel tubing and in the iron-cobalt wire used in the tests. A pick-up coil of about 1000 turns provided adequate signal strength (up to 2 V) for observation by an oscilloscope and for processing by the electronics. The length of the coils and width of the excitation pulse were parameters used to adjust the stress pulse width for minimum dispersion and maximum amplitude.

Tests were carried out with either 1.6-mm iron-cobalt wire or 3.1-mm nickel tubing as the magnetostrictive transducer. The sensor portion was typically, but not limited to, 1- × 3-mm stainless steel strips of various lengths. Either brazing or laser welding was used to join the sensor to the transducer section. Sensor zones, defined by material discontinuities large enough to reflect sufficient energy, were produced by either notching the sensor or adding material at desired places along its length.

An electronic control device was built to allow variable blanking to follow a particular echo as its position in time changed due to density and temperature effects. Typical torsional echoes in a flat, zoned probe consist of multiple peaks forming a dispersive-type pattern due to coupling to flexural vibrational modes of the flat ribbon. The interval between adjacent peaks is less than the entire time the pattern will change upon immersion in water or due to temperature effects. Thus, a fixed-interval device, which effectively sets a window around the echo of interest, would be useless.

A more serious problem with the commercial instrument concerned its basic mode of signal detection: zero crossing of the echo signal following an echo peak. For a laboratory device in an ideal environment with no noise and no interfering echoes due to other modes of excitation or secondary reflections, this may be satisfactory. In a device based on selecting the zero crossing of the signal, any small peak which appears close by can produce large errors. Even more serious is noise due to mechanical vibrations and shocks; here the amplitudes are as much as 2 to 10 times the signal. Thus, errors of hundreds of percent would be the rule with the commercial instrument under real-life reactor conditions even if the signal were strongly filtered.

Figure 1 shows how the functions described above were integrated into a complete instrument for measuring the level, density, and temperature of a test liquid. The measurement sequence was controlled by the microcomputer, which received parameters from and passed time-interval measurements to the operator's computer for logging and display purposes. An oscilloscope was used to monitor the wave forms and to make more precise measurements than allowed by the microcomputer's 4-MHz clock frequency.

The electronics were designed to fulfill several functions: accurate determination of the echo peak position, precise control of timers gated by the peak-position information, easy adjustment of the enable window position, and interfacing to a controlling computer.

3.2 ENGINEERING PROBLEMS

This section examines such problems as electrical signal propagation and acoustic pulse propagation over distances common to remote nuclear instrumentation; behavior of the sensor in radiation fields, flowing water, and voids; and concerns about mounting the sensor and transducer relating to the problem of nuclear vessel penetration. Each of these topics will be discussed in turn.

3.2.1 Propagation of Electrical Signals

The electrical signals required for remote sensor operation need to propagate in cables up to 100 m in length without significant losses. In tests transmitting the high-current excitation pulse and receiving the echo pulse over 120 m of cable, the observed loss was less than 10 db. This is acceptable since the signal-to-noise ratio remained larger than 20.

3.2.2 Acoustic Attenuation

The total sensor length, including any necessary acoustic lead-in from the transducer section, will be comparable to the vertical dimensions of a reactor vessel, so attenuation in the waveguide becomes an important consideration. Tests on a rectangular waveguide with a 2:1

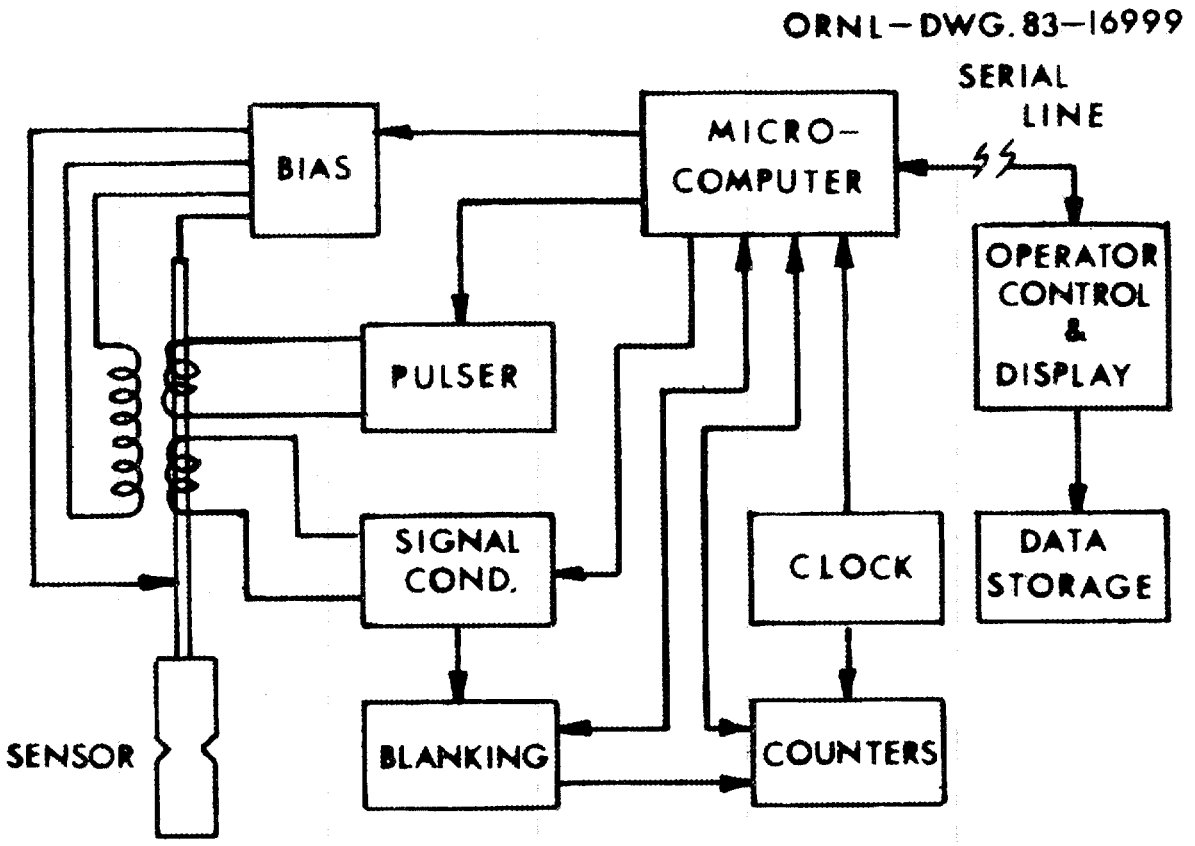

Fig. 1. Block diagram of test equipment.

aspect ratio show that acoustic echoes will have sufficient strength for reliable processing by the electronics after reflection from the end of a 25-m long probe. Detailed measurements were made on a 13-m section. The measured attenuation coefficient was 11% per meter, indicating that acoustic attenuation over reactor-scale distances will pose no problems. Figure 2 depicts the data obtained in this attenuation test. The departures from the expected exponential behavior are indicative of local variations in the material along its length.

3.2.3 Flowing Water and Voids

A test stand for subjecting a probe to rapidly flowing water in both the axial direction and across the sensor was designed for water velocities of up to 20 m/s. In actual practice, only 5 m/s water velocity was obtained due to the small size of pump used in the tests.

During the axial flow with velocities varying from 0 to 5 m/s, the only noticeable effect on the level signal was a jitter of the echo peak in time and amplitude due to fluctuations in the water level. When air was injected to test the effect of two-phase flow, the mechanical vibrations of the system increased in amplitude and intensity. The torsional transit times showed variations up to 10% due to rapidly changing column height as the voids grew and collapsed. These effects were most noticeable when the void fraction was above 50%.

For the cross-flow tests, the inlet to the probe housing was at the side and directed toward the middle of the sensor. The same results as discussed above were found for this configuration: variations in the torsional transit times corresponding to actual level and density variations. However, an additional and potentially serious effect was noted. The lateral forces due to the flowing water and impulse forces when air was added to the stream would pinch the sensor between the impinging flow and the housing structure, thus blocking the transmission of the torsional wave. The result was a sensor which had an acoustic termination for the torsional mode at the point of restriction.

There are several ways to overcome this effect in a flowing-medium environment. The most obvious one is to divert the flow from the flat portion of the sensor, which is sensitive to lateral forces. If this solution were adopted, the level information provided by the probe would then be collapsed level and not give any indication of possible voids (boiling). However, an alternate possibility remains of designing the probe housing to break up the lateral forces while still allowing voids formed outside the housing to contact the sensor. Yet another approach is to design the probe itself so that it would be deflected under a lateral force but not restricted. A probe with a star cross section would be such a design wherein a twisting of the sensor through an angle greater than that determined by two adjacent teeth would require a larger force than the moving fluid could produce.

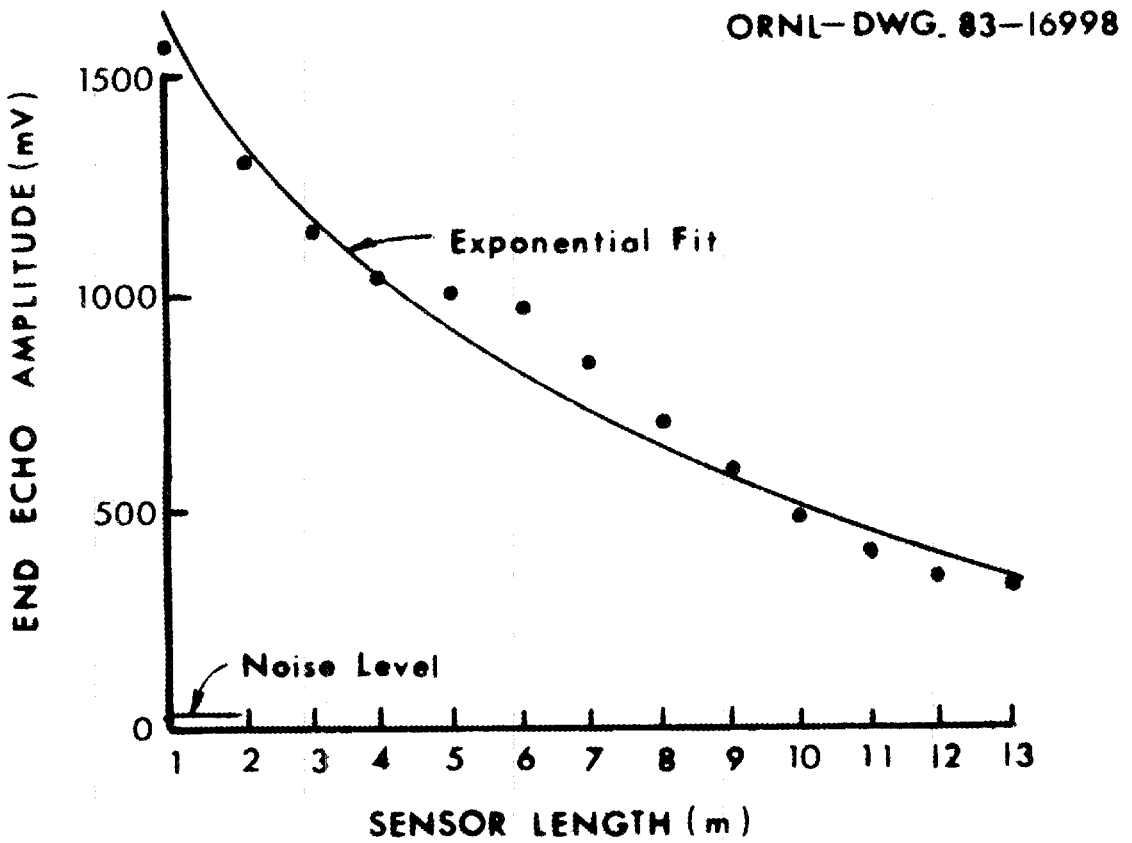

Fig. 2. Acoustic attenuation in a stainless steel sensor.

3.2.4 Material Fatigue

Since the ultrasonic method is based on creating and propagating stress pulses in various materials, the question of long-term aging due to repeated stressing of the material may arise. Even though the stresses in question are well below the region of plastic deformation (at a few parts in 100,000), some concern has been expressed due to the number of times (around 1.3×10^9) the sensor is to be stressed during its useful lifetime.

Two tests were designed to study any possible effects of self-induced aging. One was a long-term test (lasting several months) in which pulses at a rate of 30 Hz excited a test probe, and another in which 3.3×10^9 pulses were obtained in a week (equivalent to five years of continuous operation). Neither test indicated any change in the elastic moduli of the materials (iron-cobalt alloy, annealed nickel tubing, and 300 series stainless steel) to within 0.5%. Stressing well within the elastic deformation region of the material does not affect the material's elastic properties.

3.2.5 Radiation Damage

The sensor, in some cases, will pass through or alongside the reactor core. Thus, the amount of radiation damage may be significant. To estimate the magnitude of the effect of radiation damage on the elastic moduli and hence on the acoustic velocity, a 0.74- by 2.30-mm sensor 870 mm in length was placed next to and just outside the core of the Oak Ridge Research Reactor (a 30-MW light-water research reactor at ORNL). The estimated thermal flux was around 5×10^{11} neutrons/($cm^2 \cdot s$) at that location. An acoustic lead consisting of a 1.59-mm-diam, 7-m long stainless steel wire with an iron-cobalt transducer at one end allowed easy monitoring of the acoustic velocity in the sensor section. Measurements over one refueling cycle show that radiation damage is indeed present and increases the elastic moduli (hardens the material). The data indicate that the changes in elastic modulus are small (about 1%) and saturate with a 1/e time of about 6.5 weeks. Extrapolation of these data to a particular power reactor would require knowledge of the fast-neutron spectrum.

3.2.6 Temperature Effects

The temperature behavior of a sensor requires calibration due to the combined effects of temperature on sensor length, density, and elastic moduli (the dimensional change of the sensor's cross section is assumed negligible). Two materials most likely used in a reactor application, nickel and 300 series stainless steel, were calibrated in the laboratory. The stainless steel behaved essentially linearly with respect to the square of the transit times, and could be represented by

$$(t/t_o)^2 = 1 + A\,T\ , \qquad (8)$$

where the coefficient A was found to be +0.0004 per degree to within 10% for both the extensional and torsional waves over a range from 20 to 400°C. The nickel tubing exhibited a radical departure from the linear case--even a rough fit required a cubic as well as a quadratic term. A material behaving in such a fashion would, of course, not be chosen for a temperature sensor.

Figure 3 shows the results of a temperature calibration of a stainless steel sensor. The plot shows the torsional delay as a function of the extensional delay where both have been normalized to their values at 0°C. The temperature is shown as a parameter along the curve, with 0°C at the axes' intersection. Although 50°C steps are shown in the figure, the actual data were obtained with increments of 20°C. The curve is a second-degree fit through the data points.

3.2.7 Restoration of Torsional Signal

Loss of torsional signal during a pressurizer test at high temperatures was observed during an earlier study at ORNL. The residual magnetic bias in the iron-cobalt alloy used for the transducer section disappeared as the material was subjected to temperatures higher than about 250°C. Since a convenient means of sensor installation in a PWR is to place the transducer section within the pressure boundary, this was a serious consideration. The Wiedemann effect[8] indicated that this loss of torsional bias could be recovered and augmented by applying a dc current along the length of the rod,[16] passing under both excitation and pick-up coils.

Subsequent tests, in which the entire transducer section was placed in an oven, showed that the torsional signal could be maintained over the entire PWR temperature range. Figure 4 shows the results of applying a bias current to the rod. Note the approximate proportionality of the signal amplitude to the bias current.

3.2.8 Method of Measurement

Since the retentivity of nickel was found to be much less than that of the iron-cobalt alloy, the azimuthal bias was also used when nickel was the transducer material. When the transducer is near magnetic saturation in the azimuthal direction, the generation of extensional waves is greatly reduced, and vice versa. Thus the measurement cycle evolved into a three-step process: turn on the torsional bias and make the torsional measurement; switch to the extensional bias (dc coils wound over or along side of the pick-up coil) and make the extensional measurement; and demagnetize the transducer by applying an ac current of diminishing amplitude to the extensional bias coils to be ready for the next torsional bias application. Demagnetization before the extensional cycle accomplishes little, but the residual magnetization left after that measurement would permit a significant extensional signal to appear

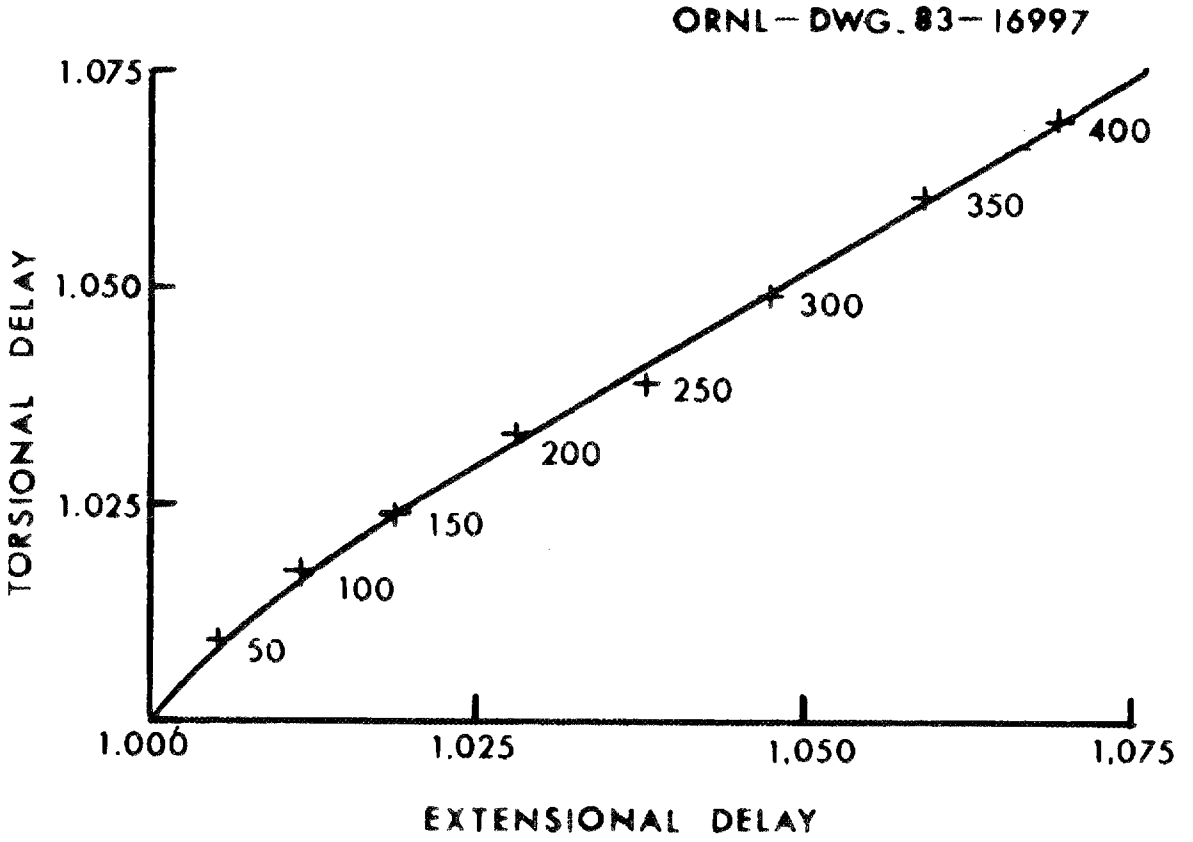

Fig. 3. Normalized torsional delays as a function of normalized extensional delay time. The temperatures (°C) are labeled along the curve.

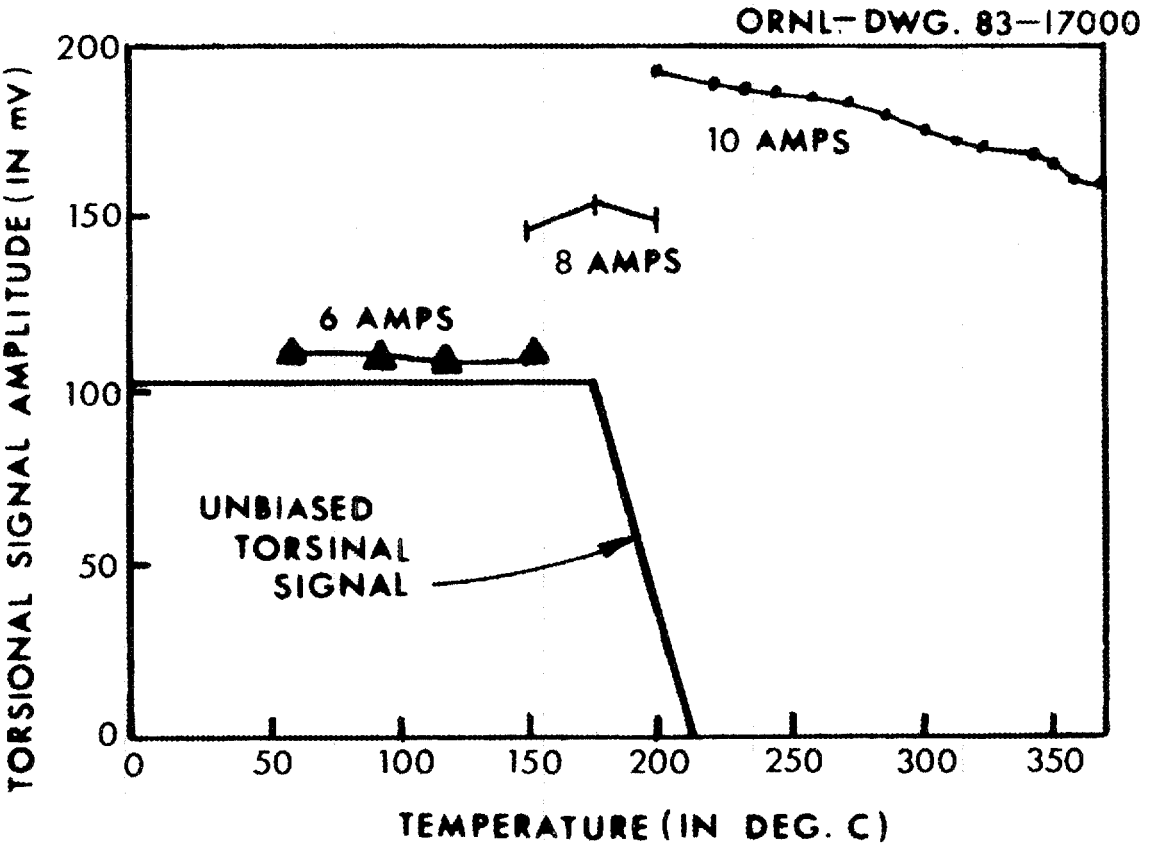

Fig. 4. Behavior of torsional signal versus temperature when a bias current flows along the transducer rod.

during the subsequent torsional measurement, dividing the pulse energy between the two modes and complicating the interpretation of the echo pattern.

3.2.9 Vessel Penetration

Various configurations for isolating the transducer section from the harsh conditions existing in the interior of a PWR have been examined. Not only must the requirements of PWR vessel penetration be taken into account, but the transmission characteristics of acoustic signals across possible pressure barriers also must be considered.

The possibilities fall into two broad categories: the transducer located inside and outside the pressure boundary. The advantage of the first is little or no acoustic loss from transmission across containment boundaries, while the second allows easier access to the transducer and insures isolation of the associated coils and electrical leads from the erosive high-temperature steam environment. Several methods have been tested and determined to be compatible with reactor operating conditions.

3.3 BASIC ACOUSTIC PROBLEMS

There are several unanswered questions in the literature on ultrasonic waveguides used for level and density measurements. The assumed linear relationship of transit time versus density breaks down when the density of the medium is no longer much smaller than that of the probe or when the cross section of the waveguide is no longer rectangular in shape. A rederived formula for f containing the inertia of the fluid moved by the sensor was obtained by considering the contribution to the "inertial" term in Eq. 1. Slowing of the torsional wave probably involves effects such as drag, complex fluid motions, and effects of nearby objects. Data obtained with a finned probe which had an easily calculable drag coefficient did not show a strict proportionality to drag as the number of fins was increased. Thus any correct theoretical expression of the velocity of torsional acoustic propagation in arbitrarily shaped waveguides will probably be difficult to obtain.

The choice of sensor shape for a given application then remains an empirical problem, with only a few heuristical observations about torsional shape constants, density ratios, and drag coefficients to guide development.

The earlier studies at ORNL identified another potential problem—gross distortion of the echoes was observed when the sensor was operated at high temperatures. The effect was identified as due to dispersion which caused the echo signal to spread out in time until its position was uncertain. When separate excitation and pick-up coils were used to provide better coupling to the magnetostrictive rod, the lengths of both

coils and the width of the excitation pulse were matched dimensions of the rod. During subsequent temperature tests, the echo pulses did not change shape over the entire range of 20 to 650°C.

The added complication of temperature and density variation of the pulse echo's shape and height would make the pattern-recognition algorithms unwieldy. The current method is to estimate the location of the echo based on the past history of the sensor, obtain an amplitude normalization using the first echo (normally from the junction of the round acoustic lead and the first sensor section), and look for the echo at the expected location in amplitude and time.

3.3.1 Density and Level Relations

Since the only fluid of concern in this study is water, the density calibration becomes one of calibrating the probe for changes in level or immersion depth. The small departure of the reactor coolant density from unity due to temperature and pressure effects will be ignored here.

There are two methods of calibration--a quick method and an elaborate one. The quick method consists of fully immersing the probe in water and noting the transit time of the torsional wave and the ambient temperature. The effective value of f for the sensor is then empirically determined. Such a method ignores any possible variations in transit time along the sensor due to local inhomogeneities in the material. Since such variations are usually small, this method has an inaccuracy of less than 5%.

The more elaborate method consists of a multi-stepped immersion wherein the length of sensor immersed is an independent variable, and the transit times are measured as a function of this length. The data obtained are used as a look-up table, with linear or quadratic interpolation between calibration points. This method is used when highly accurate values for density and level are desired.

Figure 5 shows the results of a calibration of a three-section probe. Each of the three sections has a different slope due to the different treatment the sensor received along its length during fabrication. Immersion of the entire probe (first method) results in a calibration constant (f of Eq. 6) of 0.957, whereas the individual sections have f values of 0.952, 0.959, and 0.958, respectively. The worst-case error on using the composite calibration of 0.957 for all three sections is 3% of full scale; for the individual sections via the first method, the error is 2% maximum; and the error estimated from using the calibration curve itself (second method) is less than 1% of full scale of 720 mm.

A more careful analysis of Eq. 4 can be made as follows: The inertial term, ρI, can be written to include the contribution of the fluid which is proportional to the fluid density, ρ_f, and the fluid inertial contribution which will be denoted by I_f. Thus

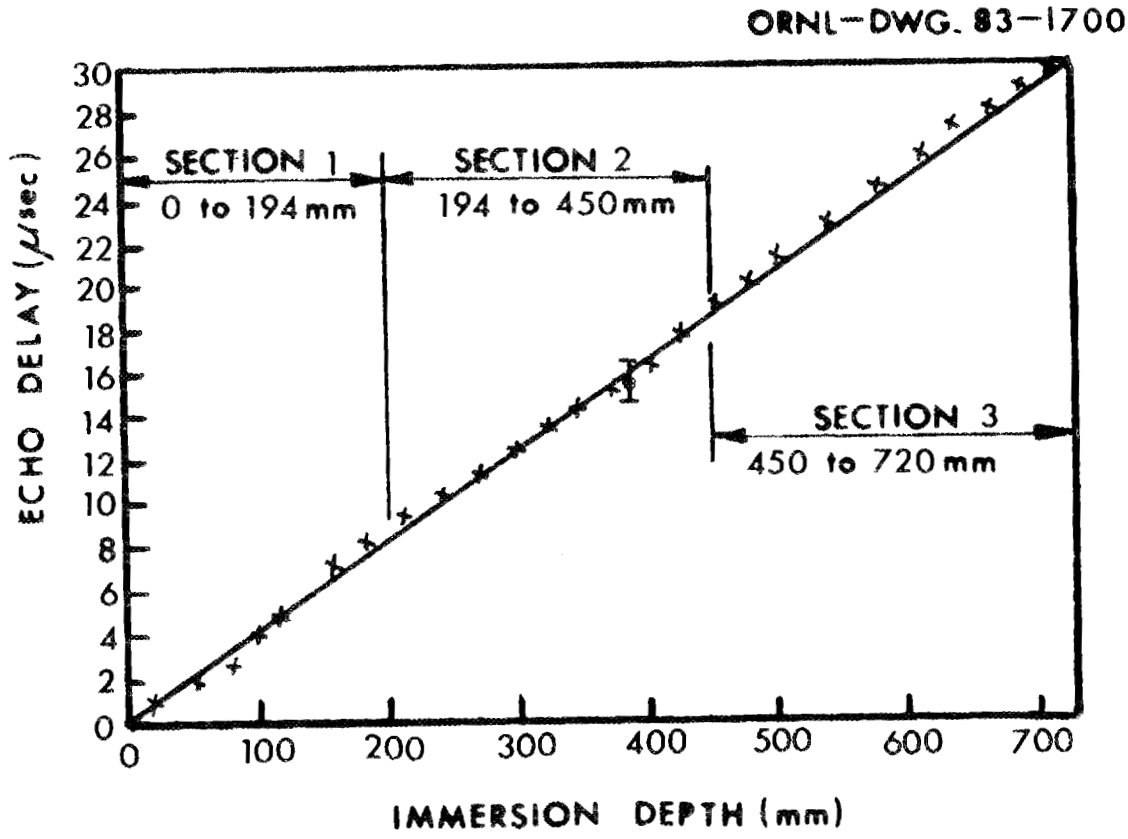

Fig. 5. Calibration of a 3-section probe.

$$\rho I = \rho_f I_f + \rho_s I_s \tag{9}$$

is the expression to consider. For the case of no fluid, the velocity is

$$v = \sqrt{G\ J\ /\rho_s I_s}\ , \tag{10}$$

and with fluid

$$v = \sqrt{G\ J\ /(\rho_f I_f + \rho_s I_s)}\ . \tag{11}$$

Noting that the transit time is twice the length, ℓ, divided by the velocity, the expression for the time for a fully immersed probe is

$$t = t_o\ (1 + \rho_f I_f/\rho_s I_s)^{1/2}\ , \tag{12}$$

where $t = 2\ell/v$. If the term $I_f/\rho_s I_s$ is called α, a factor including the geometry and density of the probe and its coupling to the fluid, we obtain

$$\rho_f = \frac{1}{\alpha}\left(\frac{t^2}{t_o^2} - 1\right). \tag{13}$$

Alternately, the expression for level of immersion, x, is given by

$$x = \ell\left(\frac{t}{t_o} - 1\right)/\left(\sqrt{1 + \alpha\rho_f} - 1\right), \tag{14}$$

which considers the wave to travel in two different sections--one with no fluid, and the other, of length x, surrounded by fluid. Such an analysis is correct if it is assumed that the presence of the fluid around one portion of the sensor does not influence the other portion; i.e., the wavelength must be small compared to the sensor length and the resolution desired.

Thus the density is a quadratic function of the transit times, while the level is a linear function. The usual claim found in the literature that the measured time (or equivalently, velocity) represents the integrated or average density along the sensor length must be carefully interpreted. It is the time that must be integrated, not the density. Admittedly, the error is small for small densities and large values of K (Eq. 5); but for the more sensitive probes it can be an appreciable effect, up to 6% for a rectangular probe with a K of 0.2.

3.3.2 Curved Waveguides

An ultrasonic level sensor installed in an existing plant must conform to the restrictions imposed by structures already in place. Thus it becomes important to know the limits on bending the waveguides: how many bends--of what nature, and through what angle--may be made before the transmission properties are impaired. Losses due to curved waveguides

fall into the two categories of dispersion and mode conversion. Even a spectrally pure wave will couple to other modes of propagation if an initially straight waveguide is curved.

In practice, it was found that as long as the radius of curvature of any bend was kept larger than 30 to 100 times the wavelength, the losses were small (of the order of a few percent) even for a 360-deg bend. Such results are consistent with the stress-strain behavior of the material in that any bending through a significantly smaller radius would produce measurable variations in the elastic moduli. Such variations in material properties give rise to velocity variations as a function of path, resulting in a typical dispersive medium. Since the optimum wavelength of the torsional pulses in a 1- by 3-mm sensor is about 1 cm, a radius of curvature of 30 cm is permissible. This should impose no undue restrictions on retrofitting a sensor to existing power plants.

3.3.3 Multisectioned Sensors

One of the strengths of the ultrasonic method is its ability to provide multiple outputs: a profile of density and temperature along the sensor length. To accomplish this, the sensor is divided into several sections by introducing appropriate discontinuities such as notches or added material (lumps). Each adjacent pair of notches then defines a sensor zone. Successful probes with up to 5 zones have undergone long-term testing under a variety of conditions. In practice, a maximum of perhaps 10 zones would be feasible in allowing the echoes to be distinguished from the background and secondary peaks.

4. CONCLUSIONS AND RECOMMENDATIONS

We have conducted a detailed study of an ultrasonic waveguide employed as a level, density, and temperature sensor. The purpose of this study was to show how such a device might be used in the nuclear power industry to provide reliable level information with a multifunction sensor, thus overcoming several of the errors that led to the accident at Three Mile Island.

Some additional work is needed to answer the questions raised by the current study--most important are the damping effects of flowing water. However, the problems encountered are not of a fundamental nature and would be resolved by a modest effort. The next phase should concentrate on nuclear qualification in a joint effort with a vendor and a utility group.

REFERENCES

1. "Report of the President's Commission on the Accident at Three Mile Island," Washington, D.C., 1979.

2. "TMI - Related Requirements for New Operating Licenses," NUREG-0694, Office of Nuclear Reactor Regulation, U.S. Nuclear Regulatory Commission, 1980.

3. "Interim Report No. 3 on TMI-2," Advisory Committee on Reactor Safeguards, May 16, 1979.

4. G. N. Miller, R. L. Anderson, S. C. Rogers, and L. C. Lynnworth, in *IEEE Ultrason. Sym. Proc., Vol. 2,* Cat #80CH1602-2, p. 877, October 1980.

5. *American Institute of Physics Handbook,* Third ed. D. E. Gray et al., Ed., American Institute of Physics, McGraw-Hill Book Company, New York, 1972.

6. Chi-teh Wang, *Applied Elasticity,* McGraw Hill, New York, 1953. Chapter 5.

7. S. Spinner and R. C. Valore, *J. Natl. Bur. Std.,* Vol. 60, No 5, Res. Paper 2861, May 1958.

8. R. M. Bozorth, *Ferromagnetism,* D. Van Nostrand Company, Inc., New York, 1951.

9. N. S. Tsannes, *IEEE Trans. Sonics Ultrason.,* Vol. SU-13, No 2, p. 33, July 1966.

10. A. E. Arave, "Ultrasonic Densitometer Development," in *IEEE Ultrason. Symp. Proc.,* Cat. #79CH1482-9, Sept. 1979.

11. L. C. Lynnworth, *IEEE Ultrason. Symp. Proc.,* Cat #77CH1264-ISU, p. 29, 1977.

12. A. E. Arave, "Ultrasonic Density Detector Air-Water Flow Test," LOFT Technical Report LTR 141-91, EG&G Idaho, Inc., January 1979.

13. L. C. Lynnworth, "Industrial Applications of Ultrasound... ," *IEEE Trans. Sonics Ultrason.,* SU-22 (2), March 1975.

14. J. E. Hardy, G. N. Miller, S. C. Rogers, and W. L. Zabriskie, "Advanced Two-Phase Flow Instrumentation Program... ," NUREG/CR-2752, Vol. 1, ORNL/TM-8365, July 1982.

REFERENCES (continued)

15. S. C. Rogers and G. N. Miller, *IEEE Trans. Nucl. Sci.*, NS-29 (1), p. 665, February 1982.

16. W. B. Dress, "A Torsional Ultrasonic Technique for LWR Liquid Level Measurement," NUREG/CR-3113, ORNL/TM-8585, January 1983.

NUREG/CR-3856
ORNL/TM-9236
Dist. Category AN

INTERNAL DISTRIBUTION

1. J. L. Anderson
2. R. L. Anderson
3-7. W. B. Dress, Jr.
8. B. G. Eads
9. A. P. Malinauskas
10-11. G. N. Miller
12. C. A. Mossman
13. F. R. Mynatt
14. L. C. Oakes
15. Max J. Kopp (Advisor)
16. Peter F. McCrea (Advisor)
17. P. W. Murrill (Advisor)
18. Henry M. Paynter (Advisor)
19. H. E. Trammell (Advisor)
20. ORNL Patent Section
21. Central Research Library
22. Document Reference Section
23-24. Laboratory Records Department
25. Laboratory Records (RC)
26. I&C Publications Office

EXTERNAL DISTRIBUTION

27. Office of Assistant Manager for Energy Research and Development, DOE-ORO, Oak Ridge, TN 37831
28. Andrew L. Hon, Division of Facility Operation, Office of Nuclear Regulatory Research, U.S. Nuclear Regulatory Commission, Washington, DC, 20555
29. L. Lynnworth, Panametrics Inc., 221 Crescent St., Waltham, MA 02154.

30-31. Technical Information Center, Oak Ridge, TN 37831.
32-131. Given distribution under NRC Category AN.

NRC FORM 335 (11 81)

U.S. NUCLEAR REGULATORY COMMISSION

BIBLIOGRAPHIC DATA SHEET

1. REPORT NUMBER *(Assigned by DDC)*
NUREG/CR-3856
ORNL/TM-9236

4. TITLE AND SUBTITLE *(Add Volume No., if appropriate)*
An Ultrasonic Level and Temperature Sensor for Power Reactor Applications

2. *(Leave blank)*

3. RECIPIENT'S ACCESSION NO.

7. AUTHOR(S)
W. B. Dress and G. N. Miller

5. DATE REPORT COMPLETED
MONTH: April | YEAR: 1984

9. PERFORMING ORGANIZATION NAME AND MAILING ADDRESS *(Include Zip Code)*
Oak Ridge National Laboratory
P.O. Box X
Oak Ridge, TN 37831

DATE REPORT ISSUED
MONTH: July | YEAR: 1984

6. *(Leave blank)*

8. *(Leave blank)*

12. SPONSORING ORGANIZATION NAME AND MAILING ADDRESS *(Include Zip Code)*
U.S. Nuclear Regulatory Commission
Washington, DC 20555

10. PROJECT/TASK/WORK UNIT NO.

11. FIN NO.

13. TYPE OF REPORT
Final

PERIOD COVERED *(Inclusive dates)*

15. SUPPLEMENTARY NOTES

14. *(Leave blank)*

16. ABSTRACT *(200 words or less)*

An ultrasonic waveguide employing torsional and extensional acoustic waves has been developed for use as a level and temperature sensor in pressurized and boiling water nuclear power reactors. Features of the device include continuous measurement of level, density, and temperature producing a realtime profile of these parameters along a chosen path through the reactor vessel.

17. KEY WORDS AND DOCUMENT ANALYSIS

17a. DESCRIPTORS

PWR Level Measurement;
Ultrasonic Level and Temperature Measurement

Core profile of temperature and density

17b. IDENTIFIERS/OPEN-ENDED TERMS

18. AVAILABILITY STATEMENT
Unlimited

19. SECURITY CLASS *(This report)*
Unclassified

20. SECURITY CLASS *(This page)*

21. NO. OF PAGES

22. PRICE
$

NRC FORM 335 (11 81)