OAK RIDGE NATIONAL LABORATORY LIBRARY
3 4456 0034834 5

CD

ORNL/CSD/TM-220

MARTIN MARIETTA

Grotesque Without Tears

J.R. Knight

OAK RIDGE NATIONAL LABORATORY
CENTRAL RESEARCH LIBRARY
CIRCULATION SECTION
4500N ROOM 175
LIBRARY LOAN COPY
DO NOT TRANSFER TO ANOTHER PERSON
If you wish someone else to see this report, send in name with report and the library will arrange a loan.
UCN 7969 (3 9-77)

OPERATED BY
MARTIN MARIETTA ENERGY SYSTEMS, INC.
FOR THE UNITED STATES
DEPARTMENT OF ENERGY

Printed in the United States of America. Available from
National Technical Information Service
U.S. Department of Commerce
5285 Port Royal Road, Springfield, Virginia 22161
NTIS price codes—Printed Copy: A03 Microfiche A01

This report was prepared as an account of work sponsored by an agency of the United States Government. Neither the United States Government nor any agency thereof, nor any of their employees, makes any warranty, express or implied, or assumes any legal liability or responsibility for the accuracy, completeness, or usefulness of any information, apparatus, product, or process disclosed, or represents that its use would not infringe privately owned rights. Reference herein to any specific commercial product, process, or service by trade name, trademark, manufacturer, or otherwise, does not necessarily constitute or imply its endorsement, recommendation, or favoring by the United States Government or any agency thereof. The views and opinions of authors expressed herein do not necessarily state or reflect those of the United States Government or any agency thereof.

ORNL/CSD/TM-220

GROTESQUE Without Tears

J. R. Knight

Date Published - September 1984

COMPUTER SERVICES
at
Oak Ridge National Laboratory
Post Office Box X
Oak Ridge, Tennessee 37831

Martin Marietta Energy Systems, Inc.
operating the
Oak Ridge Gaseous Diffusion Plant
Oak Ridge Y-12 Plant
Paducah Gaseous Diffusion Plant
Oak Ridge National Laboratory
under Contract No. DE-AC05-84OR21400
for the
DEPARTMENT OF ENERGY

OAK RIDGE NATIONAL LABORATORY LIBRARY
3 4456 0034834 5

TABLE OF CONTENTS

	Page
LIST OF TABLES	v
LIST OF FIGURES	vii
ACKNOWLEDGMENTS	ix
ABSTRACT	xi
INTRODUCTION	1
DESCRIPTION OF EXPERIMENT	1
KENO-5 CALCULATION	6
CONCLUSION	6
REFERENCES	7
APPENDIX 1	10

LIST OF TABLES

Page

Table 1. Description of the Units. 8

Table 2. Location of Units 9

LIST OF FIGURES

Page

Figure 1. GROTESQUE. The Insert Shows the Centerpiece 2

Figure 2. Experimental Arrangement 3

Figure 3. Units 1 and 5. 4

Figure 4. Centerpiece. 5

ACKNOWLEDGMENTS

The author would like to express his appreciation for the help of J. T. Thomas, who located the section of the Critical Experiment Facility Log Book which described this experiment. He would also like to thank L. M. Petrie and N. F. Landers for their many helpful suggestions and comments.

ABSTRACT

The purpose of this report is to demonstrate the capability and generality of the KENO V.a Monte Carlo criticality program in modeling and calculating a critical experiment with relatively complex geometry. This experiment, consisting of an assembly of various pieces of uranium metal, has been given the name "GROTESQUE". The steps taken to calculate this experiment using KENO V.a are described. A detailed description of the experiment and the input data used for the calculation are given.

GROTESQUE Without Tears

J. R. Knight

Introduction

In June of 1964, an unusual collection of 93.2% uranium metal pieces were assembled into a critical configuration at the Y-12 Critical Experiment Facility. The assembly consisted of cylinders, rectangular parallelepipeds, and a hemisphere. Eight units were placed in an approximately circular arrangement on a thin stainless steel diaphragm, and a centerpiece was raised remotely through a hole in the center of the diaphragm to achieve a delayed critical configuration. Monte Carlo calculations of this array are described in reference 1.

Part of the development of the KENO V.a code was collecting and executing a series of benchmark calculations for validation purposes. This report describes how this problem was set up and executed. Because of the relatively complex Generalized Geometry description[2] used for earlier calculations, this problem has become known as "GROTESQUE". The KENO V.a version uses only standard geometry features of the code.

Description of Experiment

The experimental arrangement of GROTESQUE is shown in Figure 1, and a detailed description is given in reference 3. This reference assigns unit numbers to each of the eight units around the edges of the hole in the diaphragm, as shown in Figure 2. Unit 1 is a rectangular parallelepiped with an irregularly shaped top, and unit 5 is a rectangular parallelepiped with a cylinder on top of it. The centerpiece consists of a cylinder on the bottom, a rectangular parallelepiped in the center, and a hemisphere on the top. The remaining units are cylinders. Over 200 kilograms of 93.2% enriched uranium were used in this experiment.

Figure 3 is a detailed description of units 1 and 5, taken from reference 3. Details of the centerpiece are given in Figure 4. The weight of the units in the circular pattern causes the diaphragm to sag, causing units 1 through 8 to tilt at the top slightly toward the center of the diaphragm. A description of each unit, taken from reference 3, is given in Table 1.

In addition to the description given in Table 1, reference 3 also gives the X, Y, and Z coordinates for the bottom center of each unit and the centerpiece at delayed critical. However, the use of these coordinates for describing the KENO V.a geometry presented several problems. First, the origin of the chosen coordinate system was not at the center of the hole in the diaphragm. Second, the coordinate axes were not aligned with the edges of the rectangular parts. (Alignment of the coordinate axes with the edges of the rectangular piece is a requirement of KENO V.a geometry.) Third, the use of these coordinates resulted in the center of the rectangular parts failing to fall on a common line, as they appear to do in Figure 1.

ORNL PHOTO 66028R

GROTESQUE. THE INSERT SHOWS THE CENTERPIECE

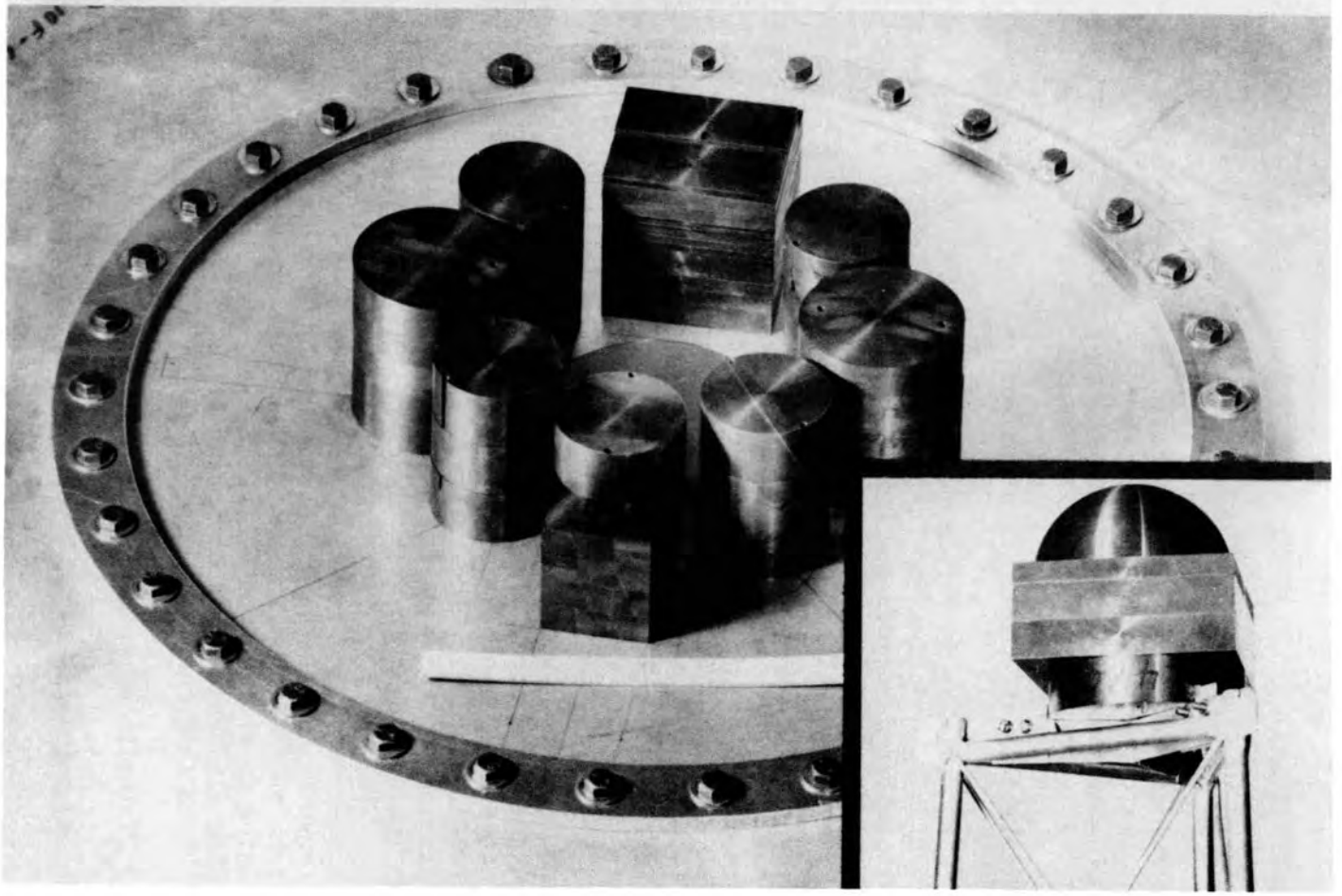

Figure 1

ORNL–DWG 84-10649

EXPERIMENTAL ARRANGEMENT

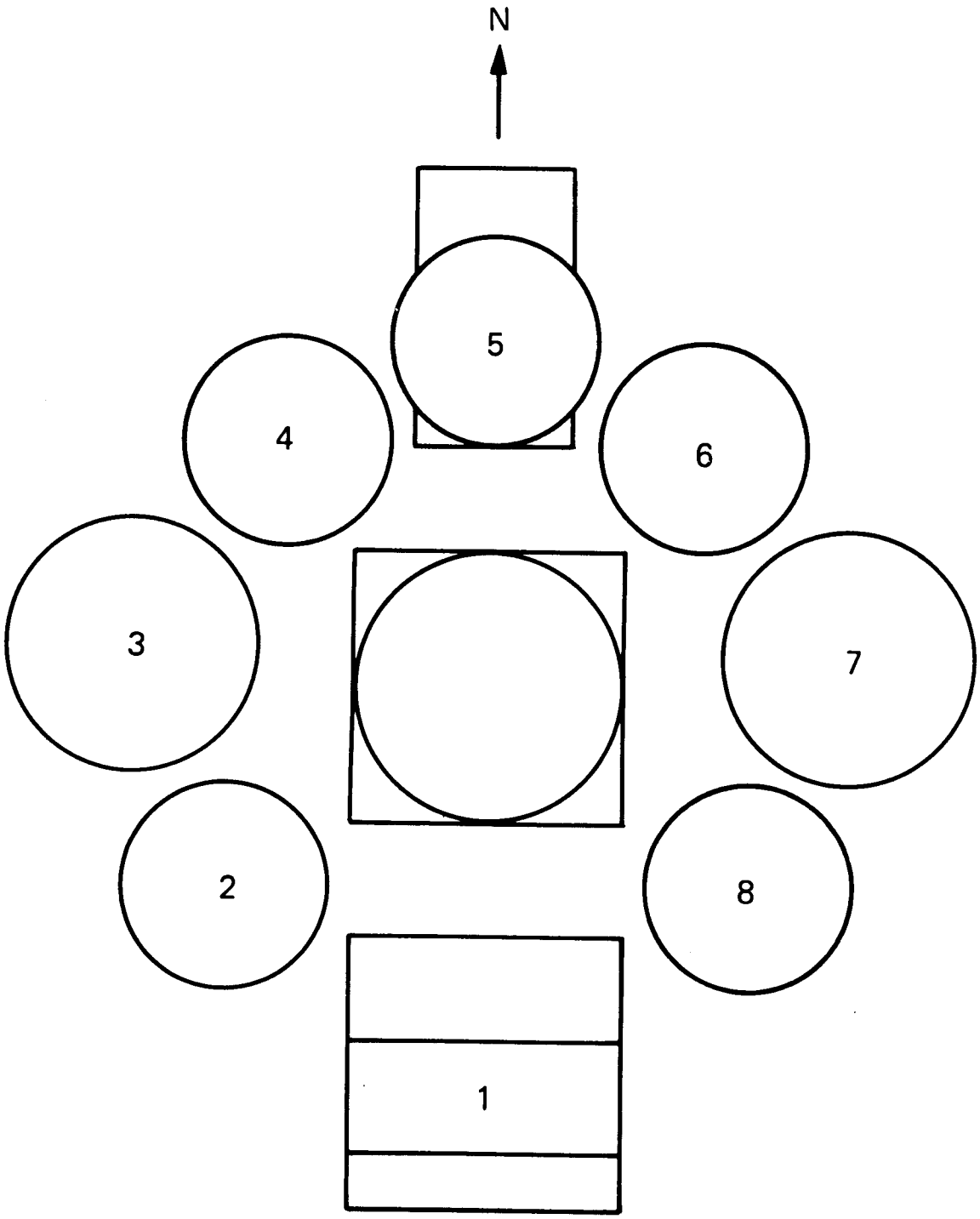

Figure 2

ORNL–DWG 84-10647

UNITS 1 AND 5

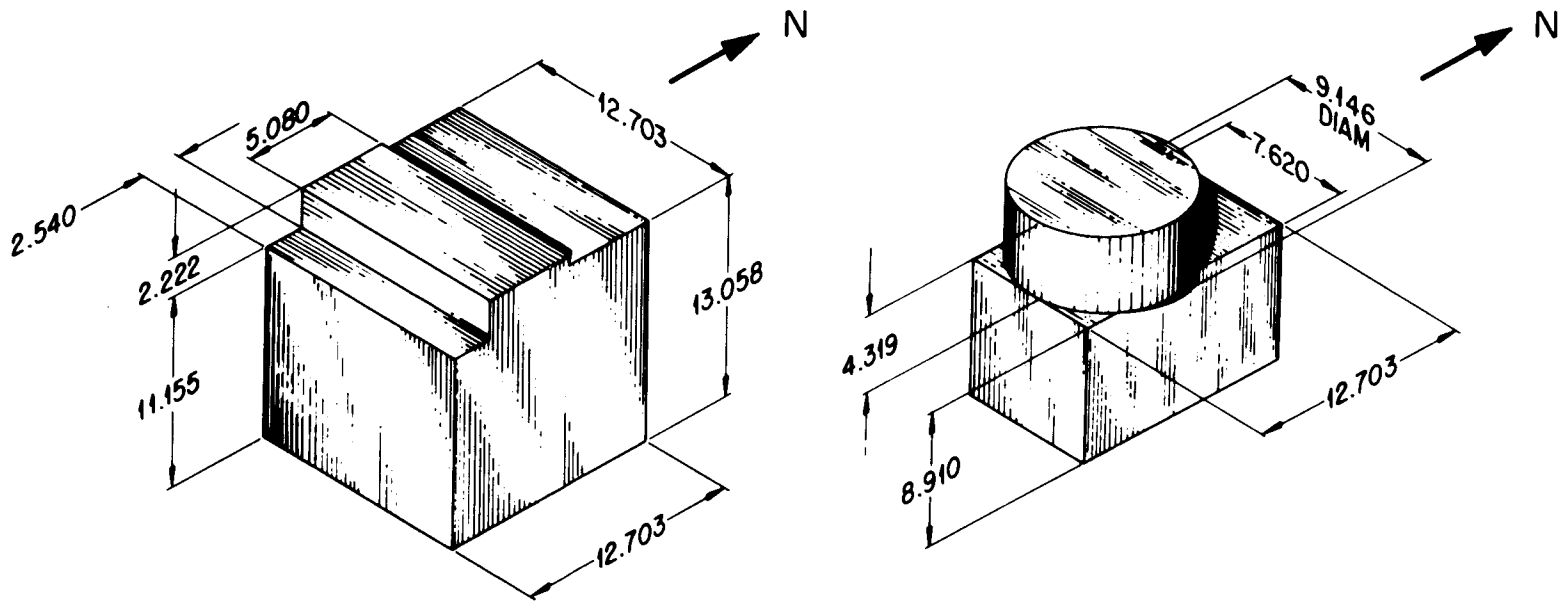

UNIT 1

UNIT 5

DIMENSIONS IN CENTIMETERS

Figure 3

ORNL–DWG 84-10648

CENTERPIECE

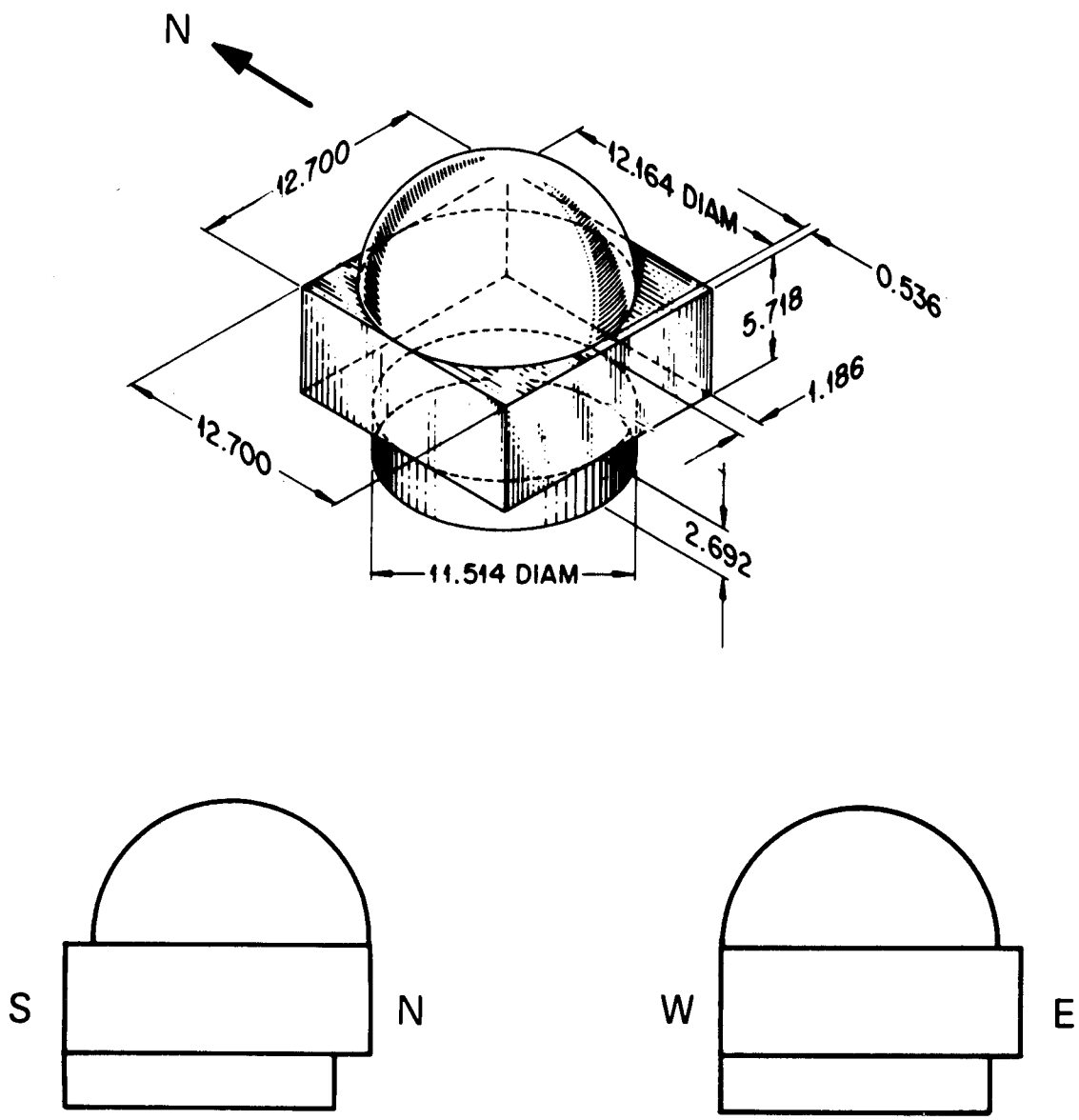

DIMENSIONS IN CENTIMETERS

Figure 4

Further information on this experiment was found in the Critical Experiment Facility Log Book.[4] The diaphragm is 10 mil stainless steel, with a 7.25 inch diameter (18.415 cm.) hole in the center. The angular spacing of the center of the units about the center of the hole and the distance of the inner edge of each unit from the edge of the hole are given. Combining this information with the sizes of the units given in reference 3, the X and Y coordinates of the center of each unit are uniquely defined for any convenient coordinate axes directions.

Several assumptions were made in setting up the KENO V.a problem description. The position Y axis was chosen as going from the center of the hole in the diaphragm toward the center of unit 5, which is north. This gives a positive X axis going from the center toward the east. Although not specifically stated in reference 3 or reference 4, the center-piece location was chosen so that the center of the rectangular parallelepiped portion was at the origin. If the center of either the cylinder or hemisphere was placed at the center of the hole, the rectangular part would be offset such that it could not be raised through the central hole without at least one corner striking the edge of the hole. In addition, using this location aligns the centers of all three rectangular parts on the Y axis. The density for the centerpiece is given in reference 3 as 18.713 gm/cm. Although the given density of the remaining units varies by small amounts from this value, this density was chosen for all of the uranium. The effect of the stainless steel diaphragm was taken as too small to be considered. The effect of the tilt of each unit toward the center of the hole was approximately compensated for by placing untilted units at the X and Y coordinates of the center of the mid-plane of each unit. The Z coordinates used are taken directly from reference 3. The angular spacing of each unit was measured counter-clockwise from the positive X axis. The KENO V input data is described in Appendix 1. The results of these calculations are given in Table 2.

KENO V.a Calculation

Unit 5 and the centerpiece were described as arrays stacked vertically. The holes option was used to place the eight units and the centerpiece at the proper coordinates for each item. The 27 group ENDF/B-4 cross-section library was used for the calculation. 203 generations of 300 neutrons (60,000 histories) were run. The KENO V.a plot option was used to print several geometry cross sections for verifying the geometrical arrangement. The calculation gave a k-effective of 0.996 .003.

Conclusion

The ability of obtaining good results from KENO V.a for problems involving reasonably complex geometry configurations has been demonstrated.

References

1. D. C. Irving and John T. Mihalczo, "Monte Carlo Calculations for Enriched Uranium Metal Assemblies," Trans. Am. Nucl. Soc., 7, 287 (1964).

2. L. M. Petrie and N. F. Cross, "KENO IV - An Improved Monte Carlo Criticality Program," ORNL-4938 (1975), p. 89.

3. J. T. Michalczo, "Multiplication Factor of Uranium Metal by One-Velocity Monte Carlo Calculations," ORNL-TM-1220 (1965).

4. Critical Experimental Facility Log Book #4, May 1964-May 1965 (unpublished), pp. 30-50.

Table 1

Description of the Units

Unit No.	Mass No.	Diameter, Cm.	Height, Cm	Tilt Angle, Deg.
1	38.497	See Figure 3		1.350
2	15.768	9.111	12.918	1.400
3	26.216	11.522	13.475	1.173
4	15.720	9.105	12.969	1.970
5	21.386*	See Figure 3		2.580
6	15.727	9.109	12.974	1.680
7	26.160	11.499	13.475	1.400
8	16.755	9.113	12.954	1.100
Centerpiece	31.287**	See Figure 4		0.0

*Rectangular parallelepiped, 16.100 Kg.; cylinder, 5.286 Kg.

**Cylinder, 8.840 Kg.
Rectangular parallelepiped, 17.200 Kg.
Hemisphere, 5.247 Kg.

Table 2. Location of Units

Unit No.	Dist. From Hole In.	Dist. From Hole Cm.	Angular Spacing, Deg.	Tilt, Deg.	Bottom Coordinates Cm. X	Bottom Coordinates Cm. Y	Bottom Coordinates Cm. Z	Midplane Coordinates X	Midplane Coordinates Y
1	0.750	1.905	270.0	1.350	0.000	-17.464	0.150	0.000	-17.306
2	0.624	1.585	217.5	1.400	-12.176	- 9.343	0.111	-12.051	- 9.247
3	0.579	1.471	173.5	1.173	-16.333	1.861	0.174	-16.196	1.845
4	0.365	0.927	130.5	1.970	- 9.539	11.168	0.156	- 9.394	10.999
5	0.755	1.918	90.0	2.58	0.0	17.477	0.290		
5 *	-	-	90.0	2.58	0.0	15.698	-	0.000	15.400
6	0.380	0.965	48.0	1.680	9.854	10.964	0.134	9.727	10.803
7	0.588	1.494	5.0	1.400	16.388	1.434	0.140	16.224	1.419
8	0.591	1.501	322.0	1.100	12.029	-9.398	0.087	11.931	-9.322
Centerpiece	-	-	-	0.0	-0.593	-0.593	-1.755	-0.593	-0.593
Centerpiece*	-	-	-	0.0	0.000	0.000	-	0.000	0.000
Centerpiece**	-	-	-	0.0	-0.268	0.268	-	-0.268	0.268

*Rectangular parallelepiped

**Hemisphere

APPENDIX 1

```
=CSAS25
KENO-5 VALIDATION CASE B-3
27GROUPNDF4  MULTIREGION
URANIUM  1 .98231 293 92235 93.2 92238 6.8 END
END COMP
CYLINDRICAL  END
1 4.55 NOEXTERMOD  END ZONE
KENO-5 VALIDATION CASE B-3
READ PARAM GEN=203 TME=6 PLT=NO END PARAM
READ GEOM
UNIT 1
CUBOID  1 1 2P6.3515 1.2685 -3.8115 13.377 13.058
CUBOID  0 1 2P6.3515 6.3515 -3.8115 13.377 13.058
CUBOID  1 1 2P6.3515 6.3515 -3.8115 13.377 11.155
CUBOID  0 1 4P6.3515 13.377 11.155
CUBOID  1 1 4P6.3515 13.377 0.
UNIT 2
CYLINDER  1 1 4.5555 12.918 0.
UNIT 3
CYLINDER  1 1 5.761  13.475 0.
UNIT 4
CYLINDER  1 1 4.5525 12.969 0.
UNIT 5
ARRAY     1 -4.573 -4.573 0.
UNIT 6
CYLINDER  1 1 4.5545 12.974 0.
UNIT 7
CYLINDER  1 1 5.7495 13.475 0.
UNIT 8
CYLINDER  1 1 4.5565 12.954 0.
UNIT 9
COM='CENTERPIECE'
ARRAY     2 -6.35 -6.35 0.
UNIT 10
COM='BOTTOM OF UNIT 5'
CUBOID    1 1 2P3.81 8.13 -4.573 8.91 0
CUBOID    0 1 2P4.573 8.13 -4.573 8.91 0.
UNIT 11
COM='TOP OF UNIT 5'
CYLINDER  1 1 4.573 4.319 0.
CUBOID    0 1 2P4.573 8.13 -4.573 4.319 0.
UNIT 12
COM='BOTTOM OF CENTERPIECE'
CYLINDER  1 1 5.757 2.690 0.  ORIGIN -.593 -.593
CUBOID    0 1 4P6.35 2.690 0.
UNIT 13
COM='MIDDLE OF CENTERPIECE'
CUBOID    1 1 4P6.35 5.718 0.
```

APPENDIX 1 (cont'd)

```
UNIT 14
COM='TOP OF CENTERPIECE'
HEMISPHERE  1 1 6.082  ORIGIN  -.268 .268 0.
CUBOID    0 1 4P6.35 6.082 0.
GLOBAL
UNIT 15
CUBOID    0 1 4P25.0 15.0 -2.0
HOLE  1 0.0 -17.306 0.15
HOLE  2 -12.051 -9.247 0.111
HOLE  3   -16.196 1.845 0.174
HOLE  4  -9.394 10.999 0.156
HOLE  5  0.0 15.400 0.29
HOLE  6  9.727 10.803 0.134
HOLE  7   16.224 1.419 0.140
HOLE  8  11.931 -9.322 0.087
HOLE  9   0.0     0.0   -1.755
END GEOM
READ ARRAY
ARA=1 NUX=1 NUY=1 NUZ=2 FILL 10 11 END FILL
ARA=2 NUX=1 NUY=1 NUZ=3 FILL 12 13 14 END FILL
END ARRAY
READ PLOT TTL='GROTESQUE' PIC=MIX
XUL=-25 YUL=25 ZUL=0.5   XLR=25 YLR=-25 ZLR=.5
UAX=1 VDN=-1  NAX=130  END
XUL=-25 YUL=25 ZUL=2   XLR=25 YLR=-25 ZLR=2  END
XUL=-25 YUL=25 ZUL=9.5   XLR=25 YLR=-25 ZLR=9.5  END
XUL=-.593 YUL=-25 ZUL=15  XLR=-.593 YLR=25 ZLR=-2
UAX=0 VAX=1  VDN=0 WDN=-1 NAX=130  END
END PLOT
END DATA
END
```

INTERNAL DISTRIBUTION

1. H. P. Carter/G. E. Whitesides/CS Library
2. H. R. Dyer, K-25
3. G. R. Handley, Y-12
4-8. J. R. Knight
9. N. F. Landers
10. J. T. Mihalczo
11. G. W. Morrison
12. L. M. Petrie
13. J. T. Thomas
14. R. M. Westfall
15-16. Central Research Library
17. Y-12 Document Reference Section
18-19. Laboratory Records
20. Laboratory Records - RC
21. ORNL Patent Section
22. K-25 Plant Library

EXTERNAL DISTRIBUTION

23. J. N. Rogers, Div. 8324. Sandia Laboratories, Livermore, CA 94550.

24. Division of Engineering, Mathematics and Geosciences, DOE, Washington, DC 20545.

25. Office of Assistant Manager for Energy Research and Development, DOE-ORO. Oak Ridge, TN 37830.

26. R. H. Odegaarden, Transportation Branch, Office of Nuclear Material Safety and Safeguards, Nuclear Regulatory Commission, Washington. DC 20555.

27-53. Technical Information Center, DOE, Oak Ridge, TN 37831.