MARTIN MARIETTA ENERGY SYSTEMS LIBRARIES

3 4456 0388236 9

ORNL/TM-8669

ornl

OAK RIDGE NATIONAL LABORATORY

MARTIN MARIETTA

A Preliminary Study of Possible ORELA Replacement Options

D. K. Olsen
J. A. Martin
D. J. Horen

OAK RIDGE NATIONAL LABORATORY
CENTRAL RESEARCH LIBRARY
CIRCULATION SECTION
4500N ROOM 175
LIBRARY LOAN COPY
DO NOT TRANSFER TO ANOTHER PERSON
If you wish someone else to see this report, send in name with report and the library will arrange a loan.
ORNL-1716 (6-97)

OPERATED BY
MARTIN MARIETTA ENERGY SYSTEMS, INC.
FOR THE UNITED STATES
DEPARTMENT OF ENERGY

Printed in the United States of America. Available from
National Technical Information Service
U.S. Department of Commerce
5285 Port Royal Road, Springfield, Virginia 22161
NTIS price codes—Printed Copy: A04; Microfiche A01

This report was prepared as an account of work sponsored by an agency of the United States Government. Neither the United States Government nor any agency thereof, nor any of their employees, makes any warranty, express or implied, or assumes any legal liability or responsibility for the accuracy, completeness, or usefulness of any information, apparatus, product, or process disclosed, or represents that its use would not infringe privately owned rights. Reference herein to any specific commercial product, process, or service by trade name, trademark, manufacturer, or otherwise, does not necessarily constitute or imply its endorsement, recommendation, or favoring by the United States Government or any agency thereof. The views and opinions of authors expressed herein do not necessarily state or reflect those of the United States Government or any agency thereof.

ORNL/TM-8669

Engineering Physics and Mathematics Division

A PRELIMINARY STUDY OF POSSIBLE ORELA REPLACEMENT OPTIONS

D. K. Olsen, J. A. Martin,* and D. J. Horen*

*Physics Division

Manuscript Completed - June 5, 1984
Date Published - June 1984

NOTICE This document contains information of a preliminary nature. It is subject to revision or correction and therefore does not represent a final report.

Prepared by
Oak Ridge National Laboratory
Oak Ridge, Tennessee 37831
operated by
Martin Marietta Energy Systems, Inc.
Under Contract No. DE-AC05-840R21400
for the
Division of Basic Energy Sciences
U.S. DEPARTMENT OF ENERGY

MARTIN MARIETTA ENERGY SYSTEMS LIBRARIES

3 4456 0388236 9

CONTENTS

Abstract 1

1. Introduction 1

2. Existing or Potential Accelerator Pulsed-Neutron Facilities 4
   2.1 Electron Linacs 4
   2.2 The LAMPF-WNR and WNR-PSR Facility 6
   2.3 Pulsed Sources for Condensed Matter Studies 6

3. ORELA Replacement Neutron Source Desiderata 9
   3.1 Neutron Production 9
   3.2 Neutron Moderation 15
   3.3 Pulsing Desiderata 15
   3.4 Intensity Desiderata 20

4. Existing Accelerator Designs 22
   4.1 General Considerations 22
   4.2 SIN Injector Cyclotron 22
   4.3 SNQ Linac 23
   4.4 ZEBRA Linac 23
   4.5 PIGMI Linac 23
   4.6 Conclusion 24

5. Other Possible Options 24
   5.1 Pulsed Power Technology 24
   5.2 Induction Linacs 25
   5.3 Internal Stacking in Cyclotrons 25
   5.4 Conventional Synchrotrons 25
   5.5 FFAG Synchrotron 25
   5.6 PRBS Pulsing 26
   5.7 Collective Accelerators 26

6. Conceptual Design Studies 26
   6.1 Large Linac 27
   6.2 LIRIC (Linac-Ring Compressor) 31

7. Discussion and Conclusion 39
   7.1 Comparison of ORELA to LANL Conceptual Designs 39
   7.2 RF Wavelength Scaled Large Linacs 43
   7.3 Additional Work for a Proposal 43
   7.4 Final Conclusions 45

Acknowledgments 45

References 46

A PRELIMINARY STUDY OF POSSIBLE ORELA REPLACEMENT OPTIONS

D. K. Olsen, J. A. Martin, and D. J. Horen

ABSTRACT

Based on two conceptual design studies performed by the LANL Accelerator Technology Division, the possibilities in terms of accelerator systems for replacing ORELA with a more intense Maxwellian-type continuous-energy neutron source are summarized and discussed. The neutron intensities from ORELA are compared with those from existing or potential accelerator systems used for cross-section and condensed-matter studies. The best replacement options seem to involve a spallation source from 200- to 400-MeV protons on an ORELA-like target. Pulsing and intensity desiderata with such a source are discussed which correspond to a spectrum-averaged 100-fold improved figure of merit over ORELA for TOF measurements with only a tenfold increased source strength. Existing accelerator designs seem to be inadequate for such a source. Consequently, two conceptual designs were developed for this study by the LANL Accelerator Technology Division. The first conceptual design is for a 200-MeV large linac capable of accelerating 1.3 A during a macropulse; this linac standing alone could serve as an ORELA replacement source. The second conceptual design is for a much smaller 250-MeV PIGMI linac with a 28-mA macropulse current which feeds a proton accumulator ring and bunch-compressor transport line. This linac-ring-compressor (LIRIC) option would give a more cost-effective neutron source for cross-section measurements, whereas the large linac, or a modified version of it, would give a much simpler system more suitable for expansion. In particular, both conceptual designs would incorporate the present ORELA building and would provide approximately 100-fold improved neutron sources over ORELA for cross-section measurements. The total estimated cost of the LIRIC system would be $43M (1984), whereas the cost of the large linac would be about a factor of two more.

1. INTRODUCTION

The Oak Ridge Linear Accelerator (ORELA) facility shown in Fig. 1 is capable of producing a time-averaged $\sim 10^{14}$ source of fast neutrons per second (fn/s) in 1000 pps and is presently the international leader for obtaining neutron cross-section data using time-of-flight (TOF) techniques for both applied and basic research programs. In order to insure maximum efficiency and the capability to satisfy U.S. neutron data needs in the future, particularly those for fission and fusion reactor systems, defense needs, and basic nuclear physics from thermal to the few-hundred-MeV range, the possible options for an ORELA replacement neutron source required study. Such a source would also enhance the condensed-matter epithermal-neutron-scattering physics capability at ORNL. This technical memorandum briefly reports on the work of the authors charged with investigating the possible options for replacing ORELA with a more intense pulsed neutron source. It was and is generally thought that a serious proposal would require a neutron source with perhaps a spectrum-averaged 100-fold improvement over the figure of merit (FOM) of ORELA for TOF measurements. With proton spallation and optimized pulse widths and repetition rates, this improvement could possibly be achieved with a tenfold increase in average neutron source strength, 10^{15} fn/s.

This study seems opportune at this time. ORELA has been operational for more than a decade, and some of the most interesting experiments and most compelling applied measurements which are easily accessible with ORELA's intensity and resolution have been made (Pe82). Some important measurements are difficult or impossible with ORELA. For example, the measurement of (n,xα) and (n,xp)

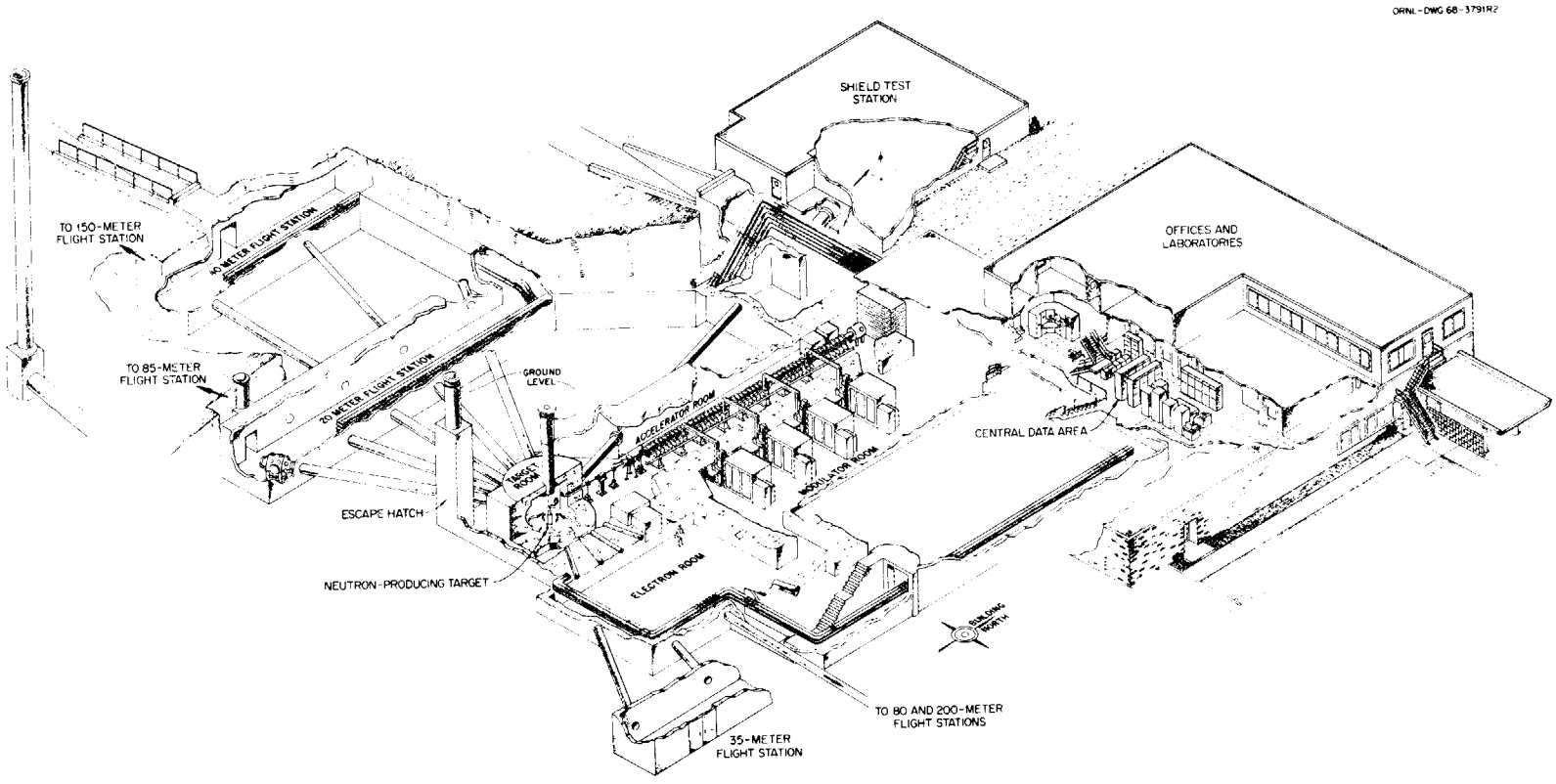

Fig. 1. ORELA facility showing the underground accelerator area, target room, flight paths and experimental stations. Altogether there are 10 evacuated flight paths with 18 measurement stations at distances from 9 to 200 m from the target-moderator. The proton beam from a replacement source could enter the target room in a direction diameterically opposite to the present electron beam.

cross sections which are required for the fusion-energy program and high-energy-resolution fission-fragment angular distributions which are of intense interest for fission theory are at the edge of or beyond ORELA's present capability. Moreover, the technology of pulsed neutron production with electron linacs is nearly optimized, so that dramatic improvements in ORELA's performance will be difficult beyond that expected from the prebuncher presently under development or a possible post buncher. The simple ORELA target is near its heat-load limit. The recent upgrading of the electron linac facilities at Harwell and Geel and proposed upgrade of the electron linac facility at JAERI, all of which are equal to or less powerful than ORELA, seems to testify to both the technological limits of the pulsed electron linacs and the continuing need for neutron data. In addition, since the construction of ORELA, interest in spallation neutron sources for condensed-matter studies has grown immensely. Some condensed-matter experiments have been done with ORELA. A replacement source would be of some benefit to condensed-matter physics programs at ORNL by providing a substantially increased flux of epithermal neutrons. This increased capability would provide an important adjunct to the intense thermal fluxes from the existing ORNL reactors and to the intense epithermal fluxes from the condensed-matter spallation sources presently under construction.

The goal of this study was limited and was to provide, if possible, a conceptual design with cost and performance parameters for an ORELA replacement neutron source. It was assumed that only a pulsed source, producing a Maxwellian-type continuous-energy spectrum giving moderated and unmoderated neutrons from subthermal to epifusion energies, would be used. Monoenergetic or thick-target continuous-energy sources based on light-element targets were not considered as primary goals. This technical memorandum is not a detailed proposal, although it could easily provide base material for a proposal. Among other things, a proposal would require a thorough programmatic justification for a new neutron source. For this study, it was simply assumed that neutrons for TOF measurements from subthermal to epifusion energies would be required.

Finally, this study does not consider a "world-class" spallation neutron source, 10^{16}-10^{17} fn/s, which could directly compete with or surpass the intense sources presently under construction at LANL and in the United Kingdom and under consideration in Germany and perhaps Japan. Such sources are primarily justified with condensed-matter studies, neutrino physics, and neutron radiation damage research. The present report results from a search for a neutron source with relatively modest capital and operating cost which would utilize the present ORELA building, target room, and beam lines. Its primary justification would be for neutron-induced nuclear-reaction cross-section measurements.

Section 2 of this report briefly reviews the major pulsed sources for both cross-section measurements and condensed-matter physics which are either operational, under construction, or under serious consideration. Section 3 briefly reviews the target and moderator considerations which suggest an ORELA-like target-moderator for a 200- to 400-MeV proton accelerator. Section 3 also lists pulsing and intensity desiderata for an ORELA replacement source. Section 4 discusses the possible use of existing accelerator designs to meet these desiderata. These designs are found to be inadequate. Section 5 lists other accelerator options suggested to the authors which were either found lacking or not thoroughly pursued. Section 6 summarizes and describes the results from two conceptual design studies for an ORELA replacement source provided by the Accelerator Technology Division of LANL. One study (Wa81) is for a 200-MeV pulsed large linac capable of producing 1.3 A of proton current during a very short macropulse. The other study (Ja84) is for a 250-MeV PIGMI linac feeding an accumulator ring and bunch compressor transport line. These reports provide the basis for the conclusions of this study which are summarized in the last section.

2. EXISTING OR POTENTIAL ACCELERATOR PULSED-NEUTRON FACILITIES

2.1 ELECTRON LINACS

ORELA, shown in Fig. 1, was designed, constructed, and brought into operation during the late 1960s and was maximized to be a high-performance source of pulsed neutrons (Pe69). During most of its operation ORELA has been substantially superior to other white sources used for neutron cross-section measurements. This commanding position has been reduced with the upgrading of the GELINA electron linac at the CBNM near Geel (Be81) and the construction of the HELIOS electron linac at Harwell (Ly80). These three electron linacs with less intense electron linacs at NBS, LLL, RPI, KURRI, and JAERI produce most of the present white source neutron data. No cyclotrons, electrostatic machines, or proton linacs, except LAMPF, are presently in use as Maxwellian-type white neutron sources.

Table 1 compares the fast-neutron intensities from GELINA, HELIOS, and ORELA. ORELA is capable of producing 3×10^{10} fast neutrons in a 5-ns pulse and 13×10^{10} fast neutrons in a 40-ns pulse (Le76). At ORELA's maximum 1000-pps rate these pulses give 3×10^{13} and 13×10^{13} fn/s, respectively. A nine-gap prebuncher presently under development (Al79) should increase the short-pulse intensity by a factor of three (8×10^{10} fn/pulse) by compressing the power of 15-ns pulses into 5-ns pulses. As of this writing, the prebuncher has demonstrated a factor of two compression for intense pulses; however, these pulses have not been accelerated onto the neutron-producing target without substantial beam loss.

HELIOS (Ly80) is a L-band electron linac very similar to ORELA and has an unloaded beam energy of 136 MeV. Its design rf power levels and accelerated electron currents are smaller than those achieved with ORELA; however, planned use of a ^{238}U neutron-producing target will allow intensities nearly equivalent to those from ORELA without the prebuncher. At the expense of increased complexity, backgrounds and safety concerns, a ^{238}U target can increase both spallation and photoneutron production by a factor of two over the Ta target used by ORELA. GELINA (Be81) is an S-band linac with an unloaded beam energy of 150 MeV and uses a ^{238}U target. For short pulses, GELINA's flux is 1/2 of the ORELA unprebunched value. For long pulses, GELINA's smaller stored energy limits its flux to 2/7 of the ORELA value. A post acceleration static bunching magnet has been installed on GELINA. This magnet appears to compress the full output power of GELINA into 1-ns-wide pulses (Tr84). Except for small differences caused by electron energy and target-moderator materials and design, these three electron linacs give similar neutron spectra. They all have variable pulse widths and repetition rates between the limits indicated in Table 1. Because of ORELA's larger rf klystron power, beam energy, bore and electron gun current, it is capable of producing a substantially larger neutron intensity than HELIOS and GELINA.

Using several orbits of a 50-MeV deuteron beam simultaneously diverted onto a thick internal ^{238}U target, the Karlsruhe cyclotron has been used as a very-intense source of forward-direction continuous-energy neutrons for MeV TOF measurements (Ci78). This source has a very modest angle- and energy-integrated neutron intensity compared to the electron linacs and is not suitable for measurements with moderated neutrons.

Table 1. Comparison of "white" neutron sources for TOF measurements

	ORELA[a] (Le76)	HELIOS[b] (Ly80)	GELINA[c] (Be81)	WNR (Au80)	PSR (Au80)
Short-pulse mode for keV-MeV TOF measurements					
Pulse-width (ns)	5	5	4	0.2	1.0
10^{10} fn/pulse	3.0	1.1	1.9	0.2	120
Pulses/s	1000	2000	900	6000	720
10^{13} fn/s	3.0	2.2	1.7	1.3	86
Long-pulse mode for meV-eV TOF measurements					
Pulse width (ns)	40[f]	40	11	3000[d]	270
10^{13} fn/pulse	13[f]	12	4.3	130	45000
Pulses/s	1000[e]	1000[e]	900[e]	120	12
10^{13} fn/s	13	12	3.9	16	540

[a]A prebuncher is presently under development (Al79) which should increase the short-pulse intensity by a factor of three (8×10^{10} fn/pulse) by compressing the power of 15-ns pulses into 5-ns pulses. As of this writing, the prebuncher has demonstrated a factor of two compression for intense pulses; however, these pulses have not be successfully accelerated onto the neutron-producing target.

[b]HELIOS has several targets and operating modes (Ly80).

[c]A post acceleration static bunching magnet has been installed on GELINA which appears to compress the 11-ns pulses down to 1-ns pulses without power loss (Tr84).

[d]For TOF measurements above a few tenths of an eV, this pulse width would significantly degrade the resolution.

[e]These repetition rates are rarely used for TOF measurements involving thermal neutrons. A rate of less than 100 pps is required to avoid pulse overlap on a 10-m flight path without a time overlap filter.

[f]For pulsed work with thermal neutrons somewhat more intense, pulses that are 3-μs wide could perhaps be produced. Design figures suggest that up to 20×10^{10} fn/pulse could be produced.

2.2 THE LAMPF-WNR AND WNR-PSR FACILITY

Table 1 also compares the fast neutron intensities from the three electron linacs with those from LAMPF's Weapons Neutron Research (WNR) facility and the Proton Storage Ring (PSR) addition to the WNR facility (La80, Au80). The 800-MeV LAMPF proton beam has a macro duty factor of approximately 6%, consisting of 120 500-μs-wide macropulses per second. These macropulses are produced by the on-time of the rf system. The rf system modulates each of these macropulses into 100,000 micropulses with 0.2-ns widths and 5.0-ns spacings. The WNR facility directly utilizes some of this proton beam to produce spallation neutrons for TOF measurements after the proton beam has been suitably structured with a helical chopper prior to injection into the linac., A post-linac kicker magnet diverts this beam into the WNR facility. A time-averaged proton current of 0.36 mA, that is averaged overall time, gives a macropulse current, averaged over the rf on-time, of 6.0 mA (Au80). This macropulse current gives 1.9×10^8 protons per micropulse or 2.2×10^9 fast neutrons per micropulse with a Ta target (Au80). The WNR facility uses these micropulses in two modes for TOF cross-section measurements. One short-pulse mode utilizes a single micropulse per macropulse giving 120 0.2-ns-wide pps with 8.3-ms spacings. The second short-pulse mode utilizes 12 macropulses/s with each macropulse structured to contain 500 0.2-ns-wide micropulses with 1-μs spacings. This mode gives twelve trains of 500 micropulses per second for fast neutron physics. These short pulses, coupled with the relatively large number of higher-energy neutrons produced from 800-MeV protons, give WNR a larger FOM for TOF measurements than the electron linacs above a few MeV; however, the operating time devoted to this mode is limited. The long-pulse mode for WNR consists of taking up to 3 μs, 600 micropulses, of each LAMPF macropulse. These wide pulses are useful mostly for condensed-matter studies.

The PSR is an extension to the WNR facility, is presently under construction, and will restructure with amplification the LAMPF proton beam to form 1-ns-wide and 270-ns-wide pulses with two or three orders of magnitude more neutrons than the present WNR pulses (La80, Au80). This amplification will be achieved by overlaying a LAMPF 1-mA time-averaged beam in a 90.2-m circumference (360-ns circulation time) storage ring. For the long-pulse mode the PSR will simply accept every tenth macropulse and overlay it 1400 times to form a 270-ns-wide pulse from 75,000 micropulses. This mode will produce 4.5×10^{15} fn/s. In the short-pulse mode the PSR will produce 720 equally time spaced pps by simultaneously overlaying, 200 times each, six micropulses spaced 60-ns apart in the ring. The 270-ns pulse will be 3500 times more intense than the ORELA 40-ns pulse. The 1-ns pulse will be 40 times more intense than an ORELA 5-ns pulse. This increased intensity coupled with the short pulse width and spectral differences between electron and proton produced neutrons will give the WNR-PSR facility 100-fold and 1000-fold larger FOMs than ORELA at 1 and 14 MeV, respectively. A detailed comparison, in terms of FOM (Ra70), between the source strengths of Table 1 has been given by Auchampaugh (Au80). Most of the WNR-PSR facility development has been for condensed-matter studies.

2.3 PULSED SOURCES FOR CONDENSED MATTER STUDIES

Over the last decade there has been considerable activity with spallation-neutron sources used primarily for condensed-matter studies. Table 2 compares the approximate characteristics of the major accelerator systems with ORELA. The purpose of this table is to place ORELA and any possible replacement option in proper perspective with respect to a large spallation source. The neutron intensities in Table 2 are in terms of fast neutrons per pulse and per second which allows a simple comparison; in terms of 1-eV neutrons per eV per second per steradian which depends on both the target and moderator and allows a comparison of epithermal flux; and in terms of peak and time-averaged thermal flux. The ILL reactor at Grenoble produces a peak and time average thermal flux of 1.5×10^{15} n/cm^2/s. Most of the pulse widths in Table 2 are determined by accelerator and storage-ring design considerations. As long as the pulse width of the source neutrons is less than about 1 μs it has an almost negligible effect on the experimental resolution below 1 eV.

Table 2. Comparison of ORELA with pulsed neutron sources for condensed matter studies

Facility	ORELA	KENS (Is81)	IPNS-1 (Ku81)	WNR-PSR (Au80)	SNS (Ma78)	SNQ (Ba81)
Location	ORNL USA	Tsukuba Japan	ANL USA	LANL USA	Rutherford UK	Julich FRG
Accelerator type	electron linac	proton synchrotron	proton synchrotron	proton storage ring	proton synchrotron	proton linac
Energy (MeV)	150	500	500	800	800	1100
Average current (μA)	400	1.5	8	100	200	5000
Beam power (kW)	60	1	4	80	160	5500
Projectile/pulse	2.5×10^{12}	6×10^{11}	1.8×10^{12}	5×10^{13}	2.5×10^{13}	3×10^{14}
Target	Ta	W	U	W	U	Pb
Fast n/proj.	0.05	8	19	14	30	25
Fast n/pulse	1.3×10^{11}	5×10^{12}	3.4×10^{13}	7×10^{14}	8×10^{14}	7×10^{15}
Pulse width (ns)	40	50	100	270	420[d]	500,000[b]
pps	1000[a]	16	30	12	50	100
Fast n/s	1.3×10^{14}	8×10^{13}	9×10^{14}	9×10^{15}	4×10^{16}	7×10^{17}
Epithermal neutrons (1 eV n/s/sr/eV)	5×10^{10}		3×10^{11}	3×10^{12}	1.0×10^{13}	
Average thermal flux[c] (n/cm^2/s)		5×10^{10}	4×10^{11}	6×10^{12}	1.0×10^{13}	7×10^{14}
Peak thermal flux[c] (n/cm^2/s)		1×10^{14}	4×10^{14}	1.2×10^{16}	5×10^{15}	1.3×10^{16}
Status	operational	operational	operational	under construction	under construction	under study

[a]Parameters for 1000 pps which is not useful for most condensed-matter experiments. ORELA was not designed for condensed matter studies.

[b]Shorter pulses would be used for TOF measurements. A second-stage compressor ring is planned.

[c]The ILL reactor at Grenoble produces a peak and average thermal flux of 1.5×10^{15} n/cm^2/s.

[d]Two 100-ns pulses separated by 220 ns.

Both ANL's IPNS-1 pulsed neutron source (Ku81) and Japan's KENS pulsed neutron facility (IS81) for the KEK booster are listed in Table 2 and based on 500-MeV proton synchrotrons. The two sources together with the WNR facility listed in Table 1 are operational and are presently being used for condensed-matter studies.

Rutherford Laboratory's Spallation Neutron Source (SNS), based on a 800-MeV proton synchroton (Ma78), and Los Alamos National Laboratory's WNR-PSR facility (La80), based on the 800-MeV LAMPF linac, are both under construction and will produce substantially larger fluxes than the existing sources. The WNR-PSR facility should produce twice the protons per pulse in a smaller beam radius than that of the SNS, whereas on a time-averaged basis the SNS should produce six times more fast neutrons than the WNR-PSR. These sources should be operational by the mid-to-late 1980s. It is important to appreciate that the WNR-PSR has the potential to be a much more intense spallation neutron source than the reference parameters listed in Table 2 (Ke81). LAMPF is capable of accelerating up to 1 mA of current. Ignoring shielding, activation, and other severe problems, most of this current could be accommodated by the PSR simply by accepting 120 pps from LAMPF instead of the reference design 12 pps. In addition, the neutron intensity could be doubled with a ^{238}U target. The LAMPF-II Kaon facility presently under study by LANL would utilize only about 100 μA of the LAMPF beam so its realization need not hinder future spallation source development at LANL (Ke81).

Perhaps the most ambitious project under active study is the Spallations-Neutronenquelle (SNQ) for Julich (Ba81). The original SNQ is based on an 1100-MeV proton linac capable of producing a 100-mA macropulse current in a 5% duty cycle. This beam on a ^{238}U target would allow the SNQ to produce a time-averaged thermal flux equal to the Grenoble reactor. The parameters of Table 2 are for a Pb target which allows the SNQ to produce, without an accumulator ring, a peak thermal flux a factor of ten larger than the Grenoble reactor. An accumulator ring under study as a future option would allow the long pulses to be compressed by a factor of 650. Because of the large cost of this facility, less ambitious neutron sources are also being studied by Julich. The linac may be built in stages with the first step ending at 350 MeV.

ANL is actively studying a source on the scale of the SNQ and based on a fixed-field alternating-gradient synchrotron (Kh83). Not listed in Table 2 is the spallation source being designed as a 1-MW beam dump for the SIN cyclotron (Ts81). This source will be essentially continuous and will be used mostly for research employing cold neutrons. Also not listed in Table 2 are the 1978 ANL's IPNS proposal (Ca78) and the recent preliminary KEK proposal (Ad82). Both of these sources are based on 800-MeV proton synchrotrons similar to SNS and producing $\sim 10^{17}$ fn/s in short pulses at a rate of 50 or 60 Hz.

In addition, subcritical boosters and pulsed reactors can provide intense sources of pulsed neutrons for condensed-matter studies. Harwell has successfully operated a ^{235}U booster on its electron linacs for twenty years. This booster amplifies the primary neutron production by a factor of ten but is limited to an electron beam power of less than 5 kW (Ly80). A ^{233}U booster providing a neutron amplification of 50 was suggested for ORELA (Pe75) which would give a 10^{16} fn/s source. The most intense pulsed neutron source presently under construction is the IBR-2 fast-pulsed reactor and LIU-30 induction linac driver presently under construction at Dubna (Lu80). The pulsed reactor by itself will produce peak thermal fluxes of 10^{16} n/cm^2/s in 100-μs-wide pulses at a rate of 5 Hz. Pulses 50 times shorter will be achieved when the 200-kW electron linac driver is completed.

Clearly, ORELA would be a relatively weak neutron source for condensed matter studies compared to these facilities. A spallation neutron source, which would be considered a significant advance over the WNR-PSR and SNS, would be required to produce over 10^{17} time-averaged fn/s in short pulses. Such a source was considered beyond the scope of this study. However, the pulsing requirements for an ORELA replacement source are more severe than those required for a dedicated condensed matter source.

3. ORELA REPLACEMENT NEUTRON SOURCE DESIDERATA

3.1 NEUTRON PRODUCTION

A combination of moderated and unmoderated spallation neutrons produced from protons in the 200- to 400-MeV range on an ORELA-like target moderator seems to be the most practical option for a modest ORELA replacement source. The need to utilize spallation neutrons seems compelling because of target heating considerations, the requirement for a relatively large flux over the fusion-energy range, and the avoidance of a large gamma flash. The choice of beam energy is less obvious and is based primarily on the desire for a highly compact bright target, a low-cost replacement option, and the avoidance of complicating meson backgrounds. In this subsection some of the considerations leading to these conclusions are presented.

Table 3 lists methods of neutron production in terms of decreasing target energy deposition per neutron. Except for controlled fusion which is presently not available, proton spallation is the most efficient method of neutron production. For accelerator-produced intense neutron sources the heat dissipated in the target is a major consideration which favors proton spallation over electron-photoneutron production as at ORELA. In particular, Fig. 2 shows the ORELA target-moderator assembly which produces neutrons in a $4.0 \times 5.1 \times 3.2\text{-cm}^3$ cube of water-cooled Ta (Ma71). This target produces about 0.05 neutrons per electron (Al70). It dissipates about 3 GeV per neutron and has a heat-load limit around 70 kW (Da81); a level which is approached under full-power operation. A 10^{15} fn/s source with electrons would require a 0.5-MW target which would provide a formidable, but not impossible, design challenge.

Table 3. Features of some neutron producing mechanisms (taken from ref. Ca78)

Process	Example	Yield	Energy Deposition (MeV/n)
(d,t) solid target	400 keV deuterons on T in titanium	4×10^{-5} n/d	10,000
Deuteron stripping	35 MeV D on liquid Li	2.5×10^{-3} n/d	10,000
Electron bremsstrahlung photoneutron	100 MeV e^- on ^{238}U	5×10^{-2} n/e	2,000
Fission	$^{235}U(n,f)$	1 n/fission	180
Spallation	800 MeV protons on ^{238}U	30 n/proton	55
(d,t) CTR	Laser or ion-beam imploded pellet	1 n/fusion	3

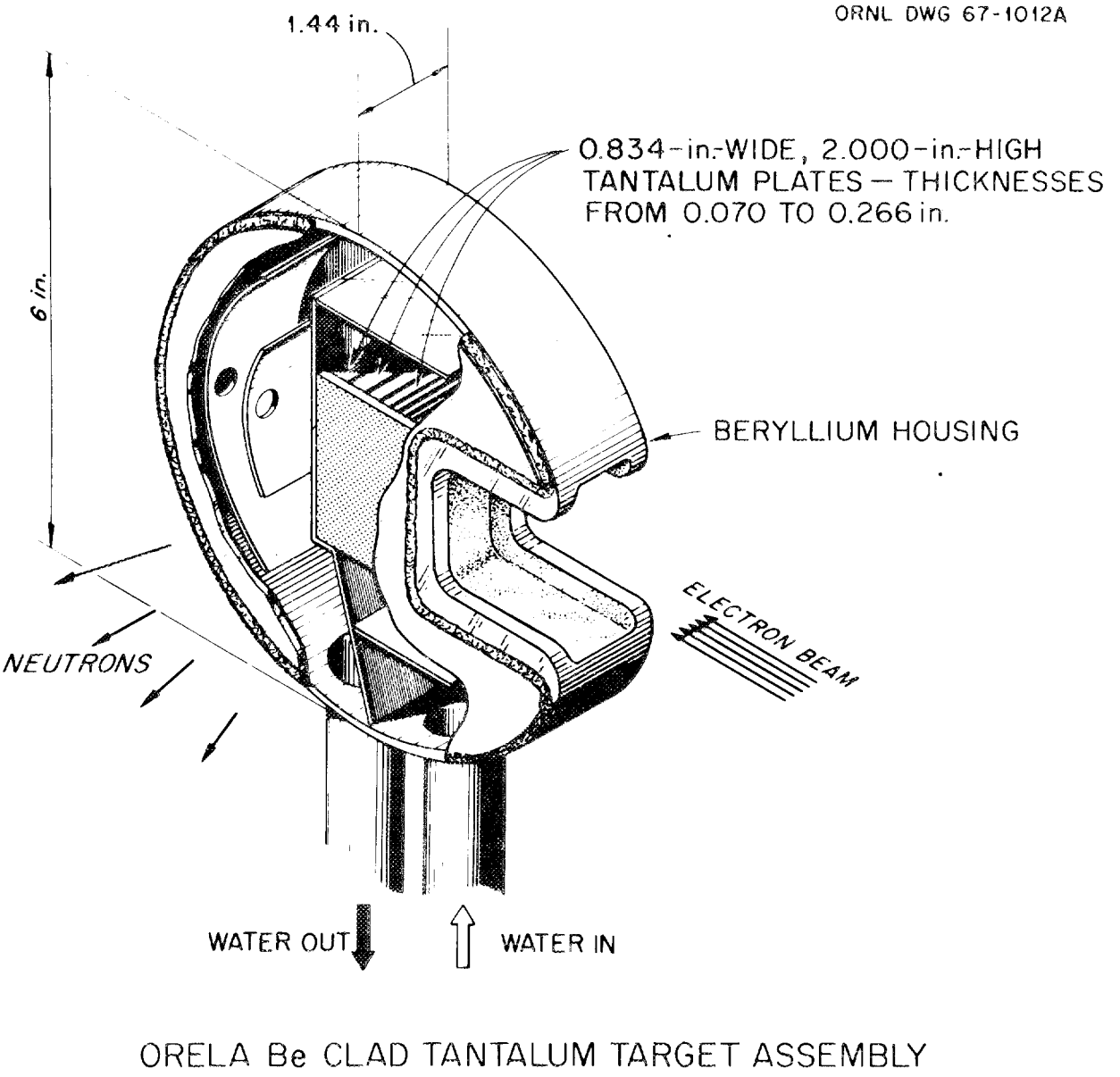

Fig. 2. ORELA water-cooled and water-moderated Be-clad Ta target assembly. The neutrons are produced in a 4.0 × 5.1 × 3.2-cm^3 volume of water-cooled Ta allowing a high target-to-moderator coupling efficiency.

Figure 3 shows a simplified two-dimensional conceptual design for a Ta ORELA-like spallation target for 190-, 210-, 230-, 250-, and 270-MeV protons. This target would also be capable of dissipating on the order of 70 kW and consists of 4.5-cm-diam plates separated by 1-mm-thick water-cooling channels. As indicated in Fig. 3, all the Ta disks are used for 270-MeV incident protons, and disks with associated water gaps are removed from the design for successively lower beam energies. For example, disks 1 through 4 would be absent from the target for 190-MeV incident protons. Figure 4 plots the number of fast neutrons per proton from this target as calculated by Alsmiller et al. (Al82). One 250-MeV proton would produce 2.3 neutrons, so this target at this energy would have to dissipate 108 MeV per neutron which is 30-fold less than that required for the ORELA electron beam. A 10^{15} fn/s source with 250-MeV protons would deposit 17 kW of beam power into the target. This lower beam power with protons could also allow the convenient use of a ^{238}U target which would provide an estimated twofold increase in neutron production per proton over Ta; however, for this study only neutron yields from Ta targets will be considered.

In addition, the cascade component from proton spallation gives a larger fraction of higher-energy neutrons than does photoneutron production. This property is illustrated in Fig. 5. The histograms shown in Fig. 5 plot (Al82) the number of neutrons emitted from a target face per MeV per steradian per incident proton at 250 MeV. The angular intervals over which the histograms were averaged are indicated in the figure. The ordinates for the various histograms have been divided by successive factors of 10 to prevent overlap. The dashed line in Fig. 5 is a calculated spectrum averaged over 4π steradians from electrons on the ORELA Ta target (Al70) and is very similar to that measured by Morgan (Mo75). This dashed curve has been normalized to Fig. 5, so it gives the same area (fn/sr/projectile) as the 15° to 45° (heavy) histrogram. As shown in Fig. 5, a 250-MeV proton beam would provide an additional factor of 10 more 14-MeV neutrons over this angular range than the ORELA electron beam for the same number of total neutrons produced. Calculations of the spallation cascade component tend to underestimate the measured high-energy yields so the gain at 14 MeV could be larger than that shown in Fig. 5 (Al83). This spectral advantage is an important consideration for measurements at fusion energies.

The choice of beam energy is ambiguous and is a compromise between conflicting requirements. The desire for an intense source suggests, at least superficially, a high proton energy. The energy required per fast neutron tends to decrease with increasing proton energy up to approximately 1 GeV. In addition, achieving increased beam power from an accelerator system is more straightforward with increased beam energy than increased beam current. However, a high proton energy leads to a longitudinally large source. An extreme example is the SNQ reference target design (Ar81) for an 1100-MeV proton beam. A target depth of 40 cm is required to accumulate 80% of the target leakage neutrons. A target of that length would not be appropriate for a neutron source used primarily for cross-section measurements. In addition to allowing a spatially compact target, a much lower beam energy would allow a lower-cost accelerator and shielding and give less complicated backgrounds. Protons with energies less than 400 MeV produce a negligible number of mesons (Al83). For most of this study a nominal proton energy of 250 MeV was chosen. At this energy, the neutron production per proton is reasonable, and the Figure-3 target produces 100% of its neutrons over a depth of 5.7 cm. No detailed optimization of the proton beam energy has been performed for this study. The optimum energy may, in fact, be higher depending on the meson production rate and coupling efficiency of the target to the moderator.

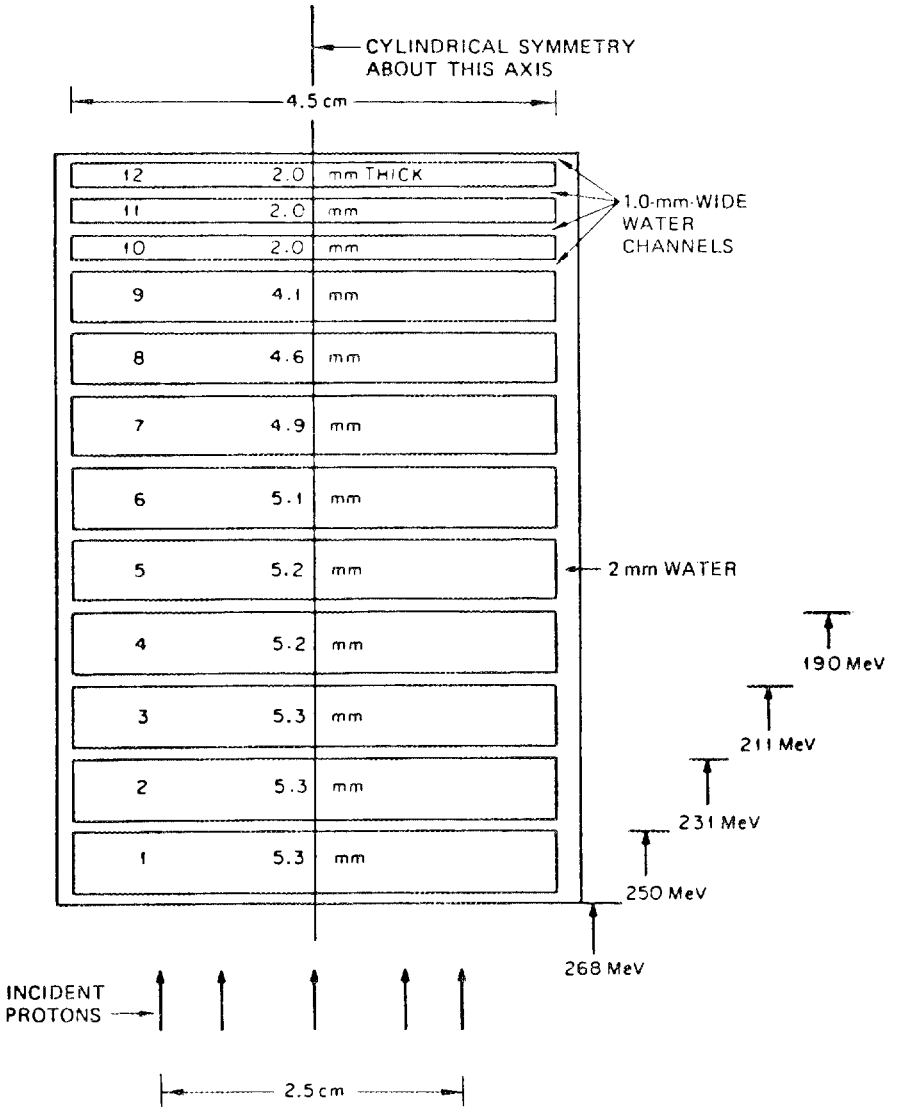

Fig. 3. Possible ORELA-like target for protons from 190 to 268 MeV. This hypothetical target consists of 4.5-cm-diam Ta disks separated by 1-mm-thick water cooling channels and gives the neutron yields of Fig. 4. Neutron energy spectra from 250-MeV protons on this target are shown in Fig. 5. The cylindrical shape was chosen to facilitate the calculation and could not be used in practice.

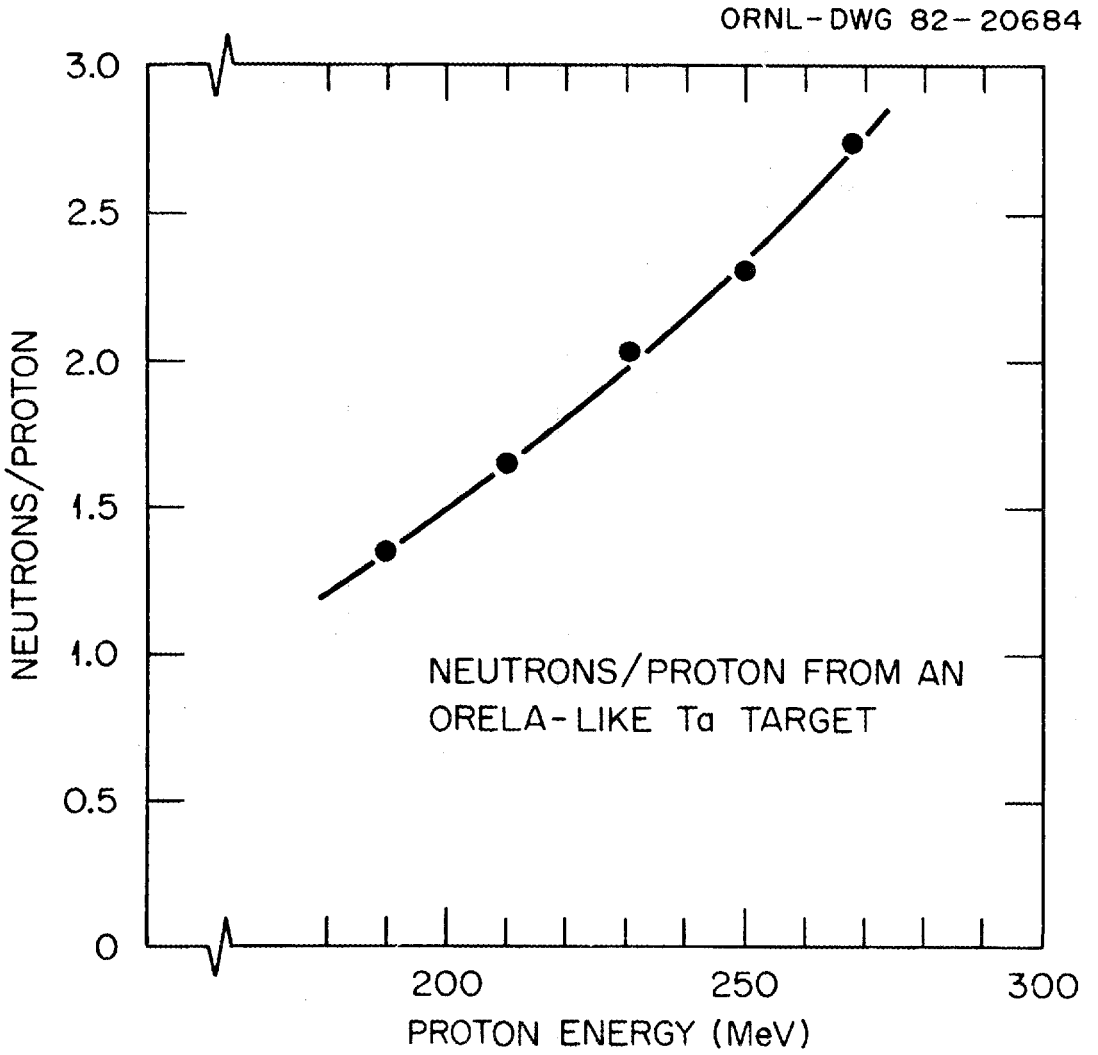

Fig. 4. Total neutron yield as a function of proton energy as calculated by Alsmiller et al. (Al82) for the ORELA-like Ta target of Fig. 3.

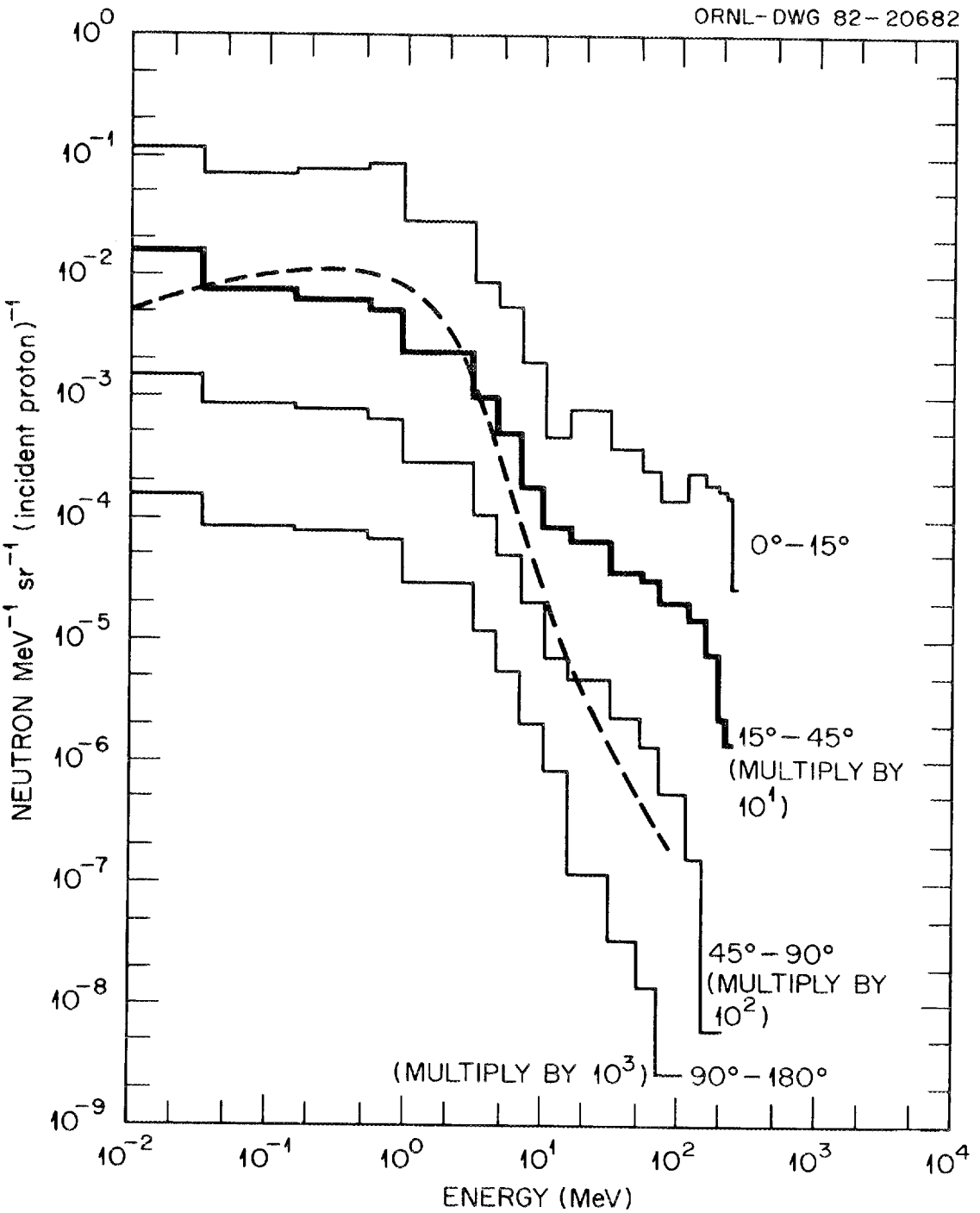

Fig. 5. The histograms are calculated (Al82) energy distributions of neutrons produced by 250-MeV protons on the ORELA-like Ta target of Fig. 3. The dashed curve is the corresponding energy distribution for 150-MeV electrons which has been normalized to give the same area (fn/sr/projectile) as the 15° to 45° histogram. A proton beam viewed within this angular range would provide a factor of ten more 14-MeV neutrons than electrons for the same total integrated neutron intensity.

3.2 NEUTRON MODERATION

A rich literature exists on the design of neutron moderators, a review of which is beyond the scope of this report. Nevertheless, Table 4 lists some calculated total-area efficiencies ϵ (n/eV/sr/fn), pulse FWHM (μs), and target figure of merits (FOMs) at 1 eV for various target-moderator assemblies. The FOMs are the total-area 1-eV efficiencies divided by the area of moderator surface, divided by the square of the pulse FWHM, and normalized to give a value of unity for the ORELA target moderator. The target-moderator efficiencies contain the target-moderator coupling factors and are for one moderator face only. At 1 eV, the ORELA target-moderator, shown in Fig. 2, gives 4.1×10^{-4} neutrons per eV per steradian per fast neutron over an area of 160 cm^2 with a moderated pulse width of 1.4 μs (Co82). The different efficiencies listed in Table 4 for the various Be-reflected moderators used for condensed-matter studies result mostly from different beam diameters and target-cooling requirements. Except for the KENS moderator, the ORELA target-moderator gives as large a FOM at 1 eV as those designed specifically for condensed-matter physics. This is the result of the high target-moderator coupling at ORELA which is possible because of the small volume within which the neutrons are produced. The ORELA target-moderator has proved to be safe and reliable, and a similar design would be probably be used, at least initially, for a replacement source.

3.3 PULSING DESIDERATA

In general, because of accelerator and accumulator-ring space charge limits in an ORELA replacement source, the number of protons contained and hence neutrons produced in a pulse would be somewhat proportional to the pulse-time width. This is also presently the case with ORELA. Under this condition an ideal replacement source would within limits have a continuously variable pulse width and a continuously variable repetition rate so the maximum allowable values could be used for a given measurement. Since this ideal proton replacement source is probably not achievable, this subsection attempts first to define the limits of the most useful combinations of pulse widths and repetition rates required for minimum-resolution-width maximum-intensity TOF measurements and then to specify pulsing desiderata for a replacement neutron source. Since each pulse width will probably require complex and expensive hardware, only three pulse widths are specified: one for MeV-keV neutrons, one for keV-eV neutrons, and one for eV-meV neutrons. These pulsing desiderata along with corresponding intensity desiderata are meant to provide a basis for designing a replacement source.

The heavy lines in Fig. 6 are vague bounds for the most useful combinations of pulse widths and repetition rates. The right-hand scale in Fig. 6 approximately connects the maximum neutron energy for a minimum-resolution-width measurement with the corresponding left-hand scale pulse width. These correspondences were obtained by noting that the smallest time dispersion of neutrons for a given energy emanating from most hydrogenous target moderators is equivalent to a flight time over a distance of about 20 mm (FWHM). This distance at low energies arises from the smear in moderation times and at high energies arises from the physical volume over which the fast neutrons are produced. Pulse widths as a function neutron energy substantially smaller than that required to traverse this 20 mm of flight path are to no avail since they cannot appreciably improve the resolution. The right-hand scale of Fig. 6 is the neutron energy which traverses 10 mm of flight path over the corresponding time of the left-hand pulse width. This 10 mm when added quadratically to the target-moderator 20 mm only degrades the resolution by 10%. For this correspondence, it has been assumed that a measurement would be made over a decade-wide energy interval logrithmically centered at the energy of interest so that the maximum pulse width is in fact for a value of 3.16 times the neutron energy. This condition give maximum pulse widths of 400, 13, and 0.4 ns for minimum-resolution-width measurements near 1 eV, 1 keV, and 1 MeV, respectively.

Table 4. Calculated efficiencies (ϵ), pulse width (FWHM), and figure of merit (FOM) at 1 eV for various moderators

Ref.		Description	ϵ(n/eV/sr/fn)[a]	FWHM(μs)	FOM[b]
Co82	ORELA	3.2-cm-thick, 14.7-cm-dia. H_2O wing slab	4.1×10^{-4}	1.4	1.0
Bi74	GELINA	4-cm-thick × 5-cm × 15-cm CH_2 wing slabs	2.9×10^{-4}	1.3	0.9
Ru77	WNR	Target inbedded in 6.5-cm-thick × 30-cm × 20-cm CH_2 slab[c]	8.3×10^{-4}	2.0	1.0
Ru77	WNR	7-cm-thick × 10-cm × 10-cm CH_2 side slab in Be reflector	4.7×10^{-4}	2.0	1.0
Ca77	IPNS-1	5-cm-thick × 10-cm × 10-cm CH_2 wing slab in Be reflector, Mod C	4.5×10^{-4}	2.0	0.9
Ma78	SNS	5-cm-thick × 10-cm × 10-cm CH_2 wing slab in Be reflector	2.5×10^{-4}	2.0	0.5
Wa82	KENS	5-cm-thick × 10-cm × 10-cm CH_2 wing slab in Be reflector	6.6×10^{-4}	2.0	1.3

[a] Contains the target-moderator coupling solid angle factor and is for one moderator face.

[b] ϵ/area/FWHM^2 normalized to unity for the ORELA target moderator.

[c] Results are viewed for a 15-cm-diameter area only.

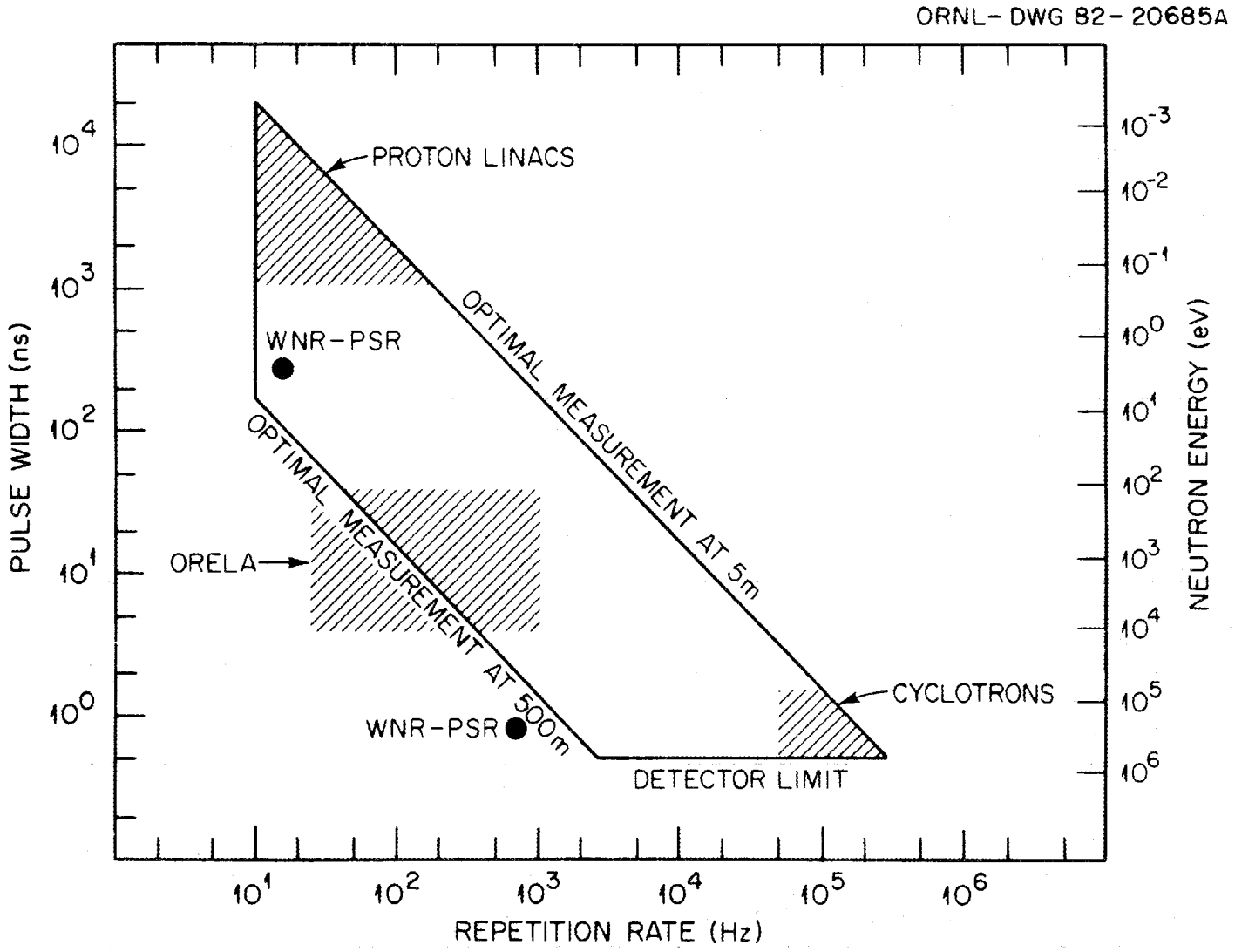

Fig. 6. Approximate bounds of pulse widths and repetition rates which can be used for minimum-resolution maximum-intensity TOF measurements under the assumption that the neutron intensity per pulse is proportional to the pulse time width. For a given mid-range neutron energy (left hand scale) the maximum pulse width for minimum resolution (right hand scale) and maximum repetition rate (lower scale) can be obtained for optimal decade-wide measurements at 5 m and 500 m. The pulse width and repetition rate combinations of ORELA and the WNR-PSR are shown as well as the limited areas for which conventional proton linacs and cyclotrons could serve as an ORELA replacement source.

The maximum useable repetition rate for a given pulse width is a much more ambigous number and depends on the flight-path length, time overlap filters, detector used, cross section measured, flux shape, and the lowest energy of interest. The diagonal lines in Fig. 6 were obtained by requiring the repetition rates to be four times slower than that needed to prevent time overlap for a given energy and flight-path length. The maximum repetition rates are for a 5-m flight path and the minimum repetition rates are for a 500-m flight path. The repetition rates were, in fact, calculated for a value of 0.316 times the given energy to allow for a decade-wide measurement. The factor of four in repetition rate gives a 1.5% flux overlap for the worst case which is a measurement with a 1/v detector and time-overlap filter in the energy region of $E^{-0.8}$ moderated flux. Less stringent time-overlap conditions can be used for measurements with Cd filters, cross-section thresholds, black detectors, and detectors with low-energy cutoffs.

The lower bound of useful pulse widths for fast neutrons is determined by the detector resolving times. For commonly used detectors this resolution is difficult to reduce below about 0.5 ns (Ci82). The minimum repetition rate is set at 10 pps. These conditions give the bounds of useful pulse widths and repetition rates shown in Fig. 6. The pulse widths and repetition rates routinely used from ORELA are shown as well as those of the WNR-PSR presently under construction. Areas where conventional proton linacs and cyclotrons could give good performance with respect to ORELA are also shown. Under the assumption that the neutron intensity is proportional to the pulse width, any point within this bounded area could be used for some minimum-resolution-width, maximum-intensity TOF measurement for a given flight-path length between 5 and 500 m. However, for this study only three pulse widths will be considered. It is assumed that the repetition rate would be variable up to some maximum value for each pulse width.

MeV-keV Neutrons

For TOF measurements with MeV neutrons, the pulse width usually dominates the resolution and should approach the detector limit; consequently, an ORELA replacement source should have a pulse width of 1 ns or less. This pulse width would surely be used for 100-keV measurements, probably be used for 10-keV measurements and could be used for 1-keV measurements. As shown in Fig. 6, maximum repetition rates from 10^3 to 10^5 Hz could be used for measurements from 10 keV to 1 MeV. A 10^5 maximum rate would reduce pileup and deadtime counting problems for high-energy measurements but could not be used for long flight path or keV measurements. A maximum rate of 10^3 Hz could be used for long flight paths and keV measurements. Perhaps 3000 Hz would be a good compromise rate allowing most 10 keV and all MeV measurements to be made simultaneously.

eV-meV Neutrons

The instrumental resolution of TOF measurements at very low neutron energies is usually dominated by the moderator time spread. At 1 eV the ORELA moderator gives a 19-mm equivalent distance (1.4-μs FWHM), whereas the more efficient Be-reflected or thicker moderators give a 27-mm equivalent distance (2.0 μs FWHM). For TOF measurements below 0.1 eV, pulse widths as wide as 3 μs would be acceptable. For this study the maximum useful pulse width will be set somewhat arbitrarily at a few hundred ns; however, if condensed-matter measurements were made wider pulses could be used. A maximum repetition rate of 120 Hz would be adequate. This pulse width could also be used for keV measurements if good resolution was not required.

eV-keV Neutrons

As shown on Fig. 6, minimum-resolution-width measurements at 0.1, 1.0, and 10.0 keV require pulse widths less than about 40, 13, and 5 ns, respectively. At least one intermediate pulse width between the MeV and eV extremes would be a necessity. Perhaps a pulse width equal to the logarithmic mean, 10-20 ns, of the MeV and eV pulses would be a good compromise. This pulse width could be used for MeV measurements if minimum resolution was not required. This pulse width would only be useful if it contained more neutrons, a factor of three perhaps, than the 1-ns pulse. A variable repetition rate from 10 to 1000 Hz would be desirable.

Some understanding of the relative importance of the various pulsing modes can be obtained by examining the ORELA pulsing parameters chosen by principal experimenters. Table 5 from Peelle et al. (Pe82) lists typical ORELA operating conditions for 1974 and 1977. Averaged over both years, 37% of the beam time was devoted to short pulse operation usually to get the best resolution for higher energies (>1 keV), 38% of the beam time was devoted to wide pulse operation usually to get the most intensity, and 24% of the beam time was devoted to intermediate pulse widths, usually chosen to be as wide as possible without damaging the resolution at the highest energy important to the measurement.

Table 5. Typical ORELA operating conditions[a] (taken from ref. Pe82)

1974 Calendar Year

Repetition Rate (pps)	3.5-5 ns	7.5-10 ns	24 ns	30-40 ns	Total (%)
25			8%, 1 kW		8
200		9%, 4 kW		2%, 10 kW	11
300		12%, 8 kW			12
800	14%, 13 kW	6%, 16 kW	5%, 25 kW	11%, 50 kW	36
1000	25%, 20 kW			8%, 60 kW	33
Total	39%	27%	13%	21%	100

1977 Calendar Year

Repetition Rate (pps)	3-6 ns	10-20 ns	30-45 ns	Total (%)
25			4%, 1.5 kW	4
200-350			12%, 20 kW	12
600			4%, 33 kW	4
800-1000	36%, 10 kW	8%, 25 kW	36%, 55 kW	80
Total	36%	8%	56%	100

[a]For each repetition rate and range of pulse widths the table gives the percentage of the total beam time and the average beam power.

3.4 INTENSITY DESIDERATA

The tables in this report directly compare neutron intensities from the ORELA electron-photoneutron target with those expected from proton spallation targets. This comparison is not entirely valid for TOF measurements because of the intense photon emission, gamma flash, from the ORELA target. The bremsstrahlung calculations of Alsmiller and Moran (Al66) lead to an estimate that the intensity of gamma-ray emission at right angles to the electron beam for a Ta target is about 250 MeV of photon emission per fast neutron (and over 100 times as much per neutron in the 0.1- to 1-eV range). For many measurements this gamma flash is a severe problem and is attenuated with shadow bars and thick heavy metal filters resulting in corresponding, but smaller, attenuations in useable neutron flux. This neutron attenuation factor for gamma flash with ORELA is difficult to quantify since it depends on the shadow bar, cross-section type, flight-path length, detector system, and energy range of interest. In addition, some photons are produced in spallation, and the cascade neutrons from spallation can be an important experimental problem for low energy measurements. Nevertheless, Table 6, based on private communications, lists for various ORELA measurements some neutron attenuation factors resulting from gamma flash suppression. These factors vary from 0.13 to 1.0 and average 0.5. For simplicity in this study, the neutron intensities from ORELA as listed in tables, will not be discounted for the gamma flash. Nevertheless, on the average the neutron intensities of ORELA should be discounted by a factor of two with respect to those from a spallation source. This factor is an important consideration for an ORELA replacement source. For condensed-matter studies the gamma flash is less of a problem since, in general, detectors are not placed directly in the beam and are not very sensitive to photons.

We seek a replacement source with a 100-fold spectrum-averaged improvement in FOM over ORELA for TOF measurements. In some sense, this spectrum-averaged improvement can be achieved by combining a 1000-fold FOM improvement for MeV and fusion energies, a tenfold FOM improvement in the eV-keV region, and a 100-fold FOM improvement for a few electrons and below. The pulse width, repetition rate, and intensity desiderata listed in Table 7 would provide such an improvement.

MeV-keV Neutrons

FOMs for minimum-resolution TOF measurements at energies above 1 MeV usually contain the inverse square of the pulse width. Consequently, 1-ns pulses give a 25-fold improvement over 5-ns pulses. In addition, as previously discussed, the spectral advantage of proton-produced neutrons provides another tenfold improvement at 14 MeV. An ORELA replacement source with 1-ns pulses produced from 250-MeV protons would provide a 250-fold improved source at 14 MeV for the same time-averaged total neutron intensity! ORELA produces 3×10^{13} fn/s in 5-ns pulses; consequently, a 3×10^{14} fn/s source in 1-ns pulses from 250-MeV protons would provide a 2500-fold stronger source for 14-MeV TOF measurements. In the keV region the full 3000 pps may not be usable and a tenfold better source is desired. ORELA produces 3×10^{10} fn/pulse in 5-ns pulses. Consequently, a replacement source would require 3×10^{11} fn/pulse. This latter desideratum is more severe and is listed in Table 7.

eV-meV Neutrons

ORELA can produce at most 13×10^{10} fn/pulse. We seek a 100-fold improvement for wide pulses so 13×10^{12} fn/pulse would be required. At 120 pps, this gives 1.5×10^{15} fn/s.

Table 6. Average neutron attenuation factor for gamma-flash filter

Flight Path	Measurement	Filter	Neutron Attenuation
6	20-m transmission Li-glass	51 mm Pb	0.16
	40-m transmission Li-glass	19 mm Pb	0.50
	150-m transmission Li-glass	6 mm Pb	0.80
1	20-200 m transmission Li-glass	6-19 mm U	0.72-0.36
1	200 m transmission NE-110	25-38 mm U	0.43-0.28
6	40-m capture	none	1.00
5	20-80 m fission and capture	6-12 mm Pb	0.80-0.64
6,8	20-40 m fission	none	1.00
7	40 m capture	6-12 mm Pb	0.80-0.64
1	200 m scattering	32 mm U	0.30
5	80 m^{-}	25 mm U	0.40
6	20 m (n,n′γ)	100 mm Th	0.13
165°	50 m (n,xγ)	38 mm U	0.28
6	150 m (n,xn)	100 mm Th	0.13
		Table Average	0.5

Table 7. Desiderata for a proton spallation neutron source with a 100-fold larger FOM than ORELA for TOF measurements

1. Short-pulse mode for 3 keV to MeV neutrons

Width	$\leqslant$ 1 ns
Repetition rate	300 $\rightarrow$ 3000 pps (variable)
Intensity	$> 3 \times 10^{10}$ fn/pulse

2. Long-pulse mode for meV to 100 eV neutrons

Width	500 $\rightarrow$ 100 μs
Repetition rate	10 $\rightarrow$ 120 pps (variable)
Intensity	$> 13 \times 10^{12}$ fn/pulse
	or $>1.5 \times 10^{15}$ fn/s at 120 pps

3. Intermediate-pulse mode for 10 eV to 30 keV neutrons

Width	20 $\rightarrow$ 10 ns
Repetition rate	10 $\rightarrow$ 1000 pps (variable)
Intensity	$> 10 \times 10^{11}$ fn/pulse
	or 1.0×10^{15} fn/s at 1000 pps

eV-keV Neutrons

It is over this energy range that ORELA is optimal and improved performance is most difficult. We seek a tenfold improvement. The 1-ns pulse desideratum provides this improvement for the upper keV region. ORELA produces 6×10^{10} and 10×10^{10} fn/pulse for 10- and 20-ns wide pulses, respectively (Le76). Consequently, replacement sources with 10×10^{11} fn/pulse would be required. At 1000 pps, this gives 1.0×10^{15} fn/s.

The Table 7 desiderata are somewhat arbitrary and are open for discussion and change. Nevertheless, they provide a basis for discussing a replacement source. If the gamma-flash problem of ORELA were fully incorporated into the discussion, the Table 7 intensity desiderata could be reduced by a factor of two.

4. EXISTING ACCELERATOR DESIGNS

4.1 GENERAL CONSIDERATIONS

It is the pulsing requirements for an ORELA replacement source which make this study necessary. The time-averaged beam intensity requirement is readily achievable. A 10^{15} fn/s source with 250-MeV protons on Ta requires a time-averaged beam of 70 μA. This beam intensity could be realized at modest cost following existing accelerator designs for meson production, medical applications, or injectors to high energy synchrotrons. However, neutron TOF measurements require a beam duty factor in the order of 10^{-4} to 10^{-6}, whereas most conventional accelerators operate with beam-duty factors from 10^{-1} to 10^{-3}.

Perhaps the most advanced designs for conventional high-current proton accelerators are the SIN injector cyclotron (Sc81), the SNQ linac (Ba81), and ZEBRA linac (Sc82). In addition, the PIGMI linac (Ha81) is very interesting because of its simplicity and its low construction and operating cost. These accelerator designs, extended or truncated to 250 MeV, are inadequate for an ORELA replacement neutron source. Nevertheless, it is instructive and provides points of reference to consider them for pulsed neutron sources in which single micropulses would be selected out as short pulses of TOF measurements.

4.2 SIN INJECTOR CYCLOTRON

A new 72-MeV separated-sector isochronous cyclotron is under construction at the Swiss Institute for Nuclear Research (SIN) to serve as a proton injector into their main 590-MeV cyclotron which is used primarily for meson production (Sc81). This is the most beam-intense cyclotron presently under consideration or construction. It was designed for a 2-mA beam current, will operate as most cyclotrons in a cw mode, and will use a "flattop" rf system with the main component at 50 MHz. Consequently, the cyclotron will produce 50×10^6 equally spaced micropulses per second. Each micropulse will be 1.1-ns wide and contain 2.5×10^8 protons. One micropulse accelerated to 250 MeV and incident on a Ta target would produce 6×10^8 neutrons, 50-fold less than an ORELA 5-ns pulse. Similarily a 1.0-μs-wide train of 50 micropulses would produce 3×10^{10} neutrons, a factor of 4 less than an ORELA 40-ns pulse. The micropulses would need to contain at least a 100-fold more protons in order for an extended version of this cyclotron, operated in the conventional manner, to be interesting as an ORELA replacement source. The true cost of this injector is somewhat unknown since much of the work was done in-house using operating funds.

4.3 SNQ LINAC

The proton linear accelerator for the German SNQ project is perhaps the most ambitious linac project presently under consideration for construction (Ba81). It consists of a 400-keV ion source, a 108-MHz drift-tube linac (DTL) from 0.4 to 105 MeV, and a 324-MHz coupled-cavity linac (CCL) from 105 to 1100 MeV. The rf of the 108-MHz DTL will modulate the beam into 1.0-ns-wide micropulses with spacings of 9.3 ns. The 5% rf on-duty cycle will form 100 macropulses per second, each consisting of 54,000 micropulses. The accelerator is designed to carry a 100-mA macropulse of beam current so each micropulse contains 6×10^9 protons. These micropulses, accelerated to 250 MeV and incident on Ta, would each produce 1.4×10^{10} neutrons, twofold less than an ORELA 5-ns pulse. A 1.0-μs train of 108 micropulses would produce 1.6×10^{12} neutrons, 13-fold more than an ORELA 40-ns pulse. The projected current limit of this accelerator is conservative to insure its realization and provide for the small beam losses made necessary by the large time-averaged current of 5 mA. It is interesting to note that the time-averaged beam current requirement of 300 mA for an accelerator breeder device is nearly two orders of magnitude larger than those planned for the SNQ linac. The whole SNQ facility is estimated to cost $679 million (Ba81).

4.4 ZEBRA LINAC

Perhaps the most advanced accelerator breeder program is the Zero Energy Breeder Accelerator (ZEBRA) project at Chalk River. Their reference design for a 300-mA cw 1-GeV linac consists of a 75-keV multi-aperature ion source, a 108-MHz radio frequency quadrupole (RFQ) to 2 MeV, a 216-MHz DTL from 2 to 200 MeV, and a 432-MHz CCL from 200 to 1000 MeV (Sc82). A substantial amount of research and development would be required to build a 1-GeV 300-mA cw accelerator. One micropulse accelerated to 250 MeV and incident on Ta would produce 4.3×10^{10} fn, about the same as an ORELA 5-ns pulse. Similarly, a 1.0-μs train of micropulses would produce 4.7×10^{12} fn, 34-fold more than an ORELA 40-ns pulse. The 200-MeV DTL would give a 3×10^{18} fn/s source on a cw basis and cost $77 million (1981 Canadian dollars).

4.5 PIGMI LINAC

In some respects, the most interesting advanced linac concept is the Pion-Generator-for-Medical-Irradiations (PIGMI) accelerator designed by the LANL Accelerator Technology Division for meson production with 100 μA of 650-MeV protons for use in clinical therapy at a hospital environment (Ha81). The reference design calls for 60-μs-wide macropulses at a rate of 60 Hz. It consists of a 440-MHz RFQ and DTL below 125 MeV and a 1320-MHz CCL above 125 MeV. It is remarkably simple, cost-effective, and somewhat follows the physical dimensions of ORELA; the CCL employs the same klystrons as ORELA. The heart of the system is the RFQ which takes a cw beam from a 30-keV ion source and delivers a matched 2-MeV beam to the DTL with nearly a 100% efficiency. Like ORELA it has a short rf duty cycle, 0.5%, and large accelerating gradient, 6 to 8 MeV/m. The 27-mA macropulse beam current gives 4×10^8 protons/micropulse which, if accelerated to only 250 MeV and incident on Ta, would produce 1.0×10^9 fn, 30-fold less than an ORELA 5-ns pulse. Similarly, a 1-μs macropulse would produce 4.4×10^{11} neutrons, threefold more than an ORELA 40-ns pulse. The PIGMI time-averaged beam current is ideal for an ORELA replacement source; however, the beam time structure is inappropriate for neutron TOF measurements.

4.6 CONCLUSION

The results of this discussion are summarized in Table 8 where the fast neutrons per pulse from ORELA are compared with those from one micropulse and a 1-μs macropulse from the advanced accelerator designs. As in the previous discussion, the beam energies of the proton accelerators have been extended or truncated to 250 MeV and assumed to be incident on a Ta target. None of these accelerators would provide a satisfactory replacement source; however, they have been mostly optimized for cw operation, not pulsed operation. A SIN-type cyclotron operated in a conventional manner at 10^5 to 10^6 pps could be developed with reasonable power cost into a good neutron source for MeV TOF measurements. On the other hand, the ZEBRA linac could provide a good neutron source for meV TOF measurements. When operated at a few-hundred short macropulses per second, its power consumption would be managable. The simultaneous requirements for both short- and long-pulse capabilities significantly complicate this study.

Table 8. Neutrons/pulse comparison of ORELA with advanced conventional accelerators used as pulsed neutron sources[a]

Facility	ORELA[b]	SIN	PIGMI	SNQ	ZEBRA
Short-pulse or single micropulse mode					
Pulse-width (ns)	5	1.1	<1.0	<1.0	<1.0
Pulse-spacing (ns)	10^6	20.0	2.3	9.3	9.3
10^{10} fn/pulse	3.0	0.06	0.10	1.4	4.3
Long-pulse or 1-μs-wide macropulse mode					
Pulse width (ns)	40	1000	1000	1000	1000
10^{10} fn/pulse	13	3	44	150	470

[a]Beam energy truncated or extended to 250 MeV and incident on an ORELA-like Ta target.
[b]Intensity could be discounted by a factor of two for gamma flash.

5. OTHER POSSIBLE OPTIONS

In this section other options suggested to the authors for an ORELA replacement source are discussed. These options were either rejected or not thoroughly studied.

5.1 PULSED POWER TECHNOLOGY

Substantial progress has been made in the technology of pulsed power devices over the years (Na79). These devices consist of an energy storage system and pulse-forming network which are discharged through some diode, triode, or tetrode producing ion beams of several hundred kA in the MeV range for times as short as 50 to 100 ns. The low repetition rate of these devices, approximately one pulse per day, is unsuitable for neutron TOF measurements. With lower beam powers, higher repetition rates are possible.

5.2 INDUCTION LINACS

An induction linac is made up of a succession of small pulsed-power modules, each timed to give an energy increment to the particles at the moment of passage of the beam. The pulsed-power modules drive ferrite loops with the particle beam acting, in a sense, as a transformer secondary. Progress on induction linacs has been reviewed by Faltens and Keefe (Fa81) and Leiss (Le79). Perhaps the most ambitious U.S. project is the LLL's Advanced Test Accelerator (ATA) which is designed to produce 10 kA of electron beam current at 50 MeV with pulses as short as 50 ns (Br81). The average repetition rate is 5 Hz with a burst-mode capability of 1 kHz for ten pulses. The development of reliable high-voltage (250 kV) spark-gap switches to operate at a 1000 Hz is a significant technological advance. Further improvements in switch technology would be necessary for use as an ORELA replacement source. A prototype module of an unique long-pulse, low-cost, high-current induction linear accelerator has been designed, constructed, and tested at NBS (Le80). Tests prove that such modules are capable of accelerating several kiloamperes at a voltage gradient of better than 0.25 MeV per meter. Combined with a high-current injector, the prototype module has accelerated a 1-kA, 1-μs electron beam pulse to over 0.8 MeV with a computed energy spread of less than 3%. The acceleration of ions with induction linacs is also studied; however, the same space charge forces which limit low energy ion current in an rf linac (1 to 10 A) also limit low energy ion current in an induction linac. Perhaps wider apertures could be used with an induction linac.

5.3 INTERNAL STACKING IN CYCLOTRONS

One fruitful area of accelerator technology relevant to this study is the possibility of internal stacking in cyclotrons. These schemes are discussed by Pollock (Po81) and essentially involve preparing an intense proton pulse in the outer orbits of an isochronous cyclotron from many individual turns; the accelerator and storage ring functions are combined in the cyclotron. Joho (Jo74) has discussed a scheme for storing beams of up to 100 A inside the SIN 500-MeV H^+ cyclotron. The problem of extraction was left unsolved. Calculations show that over 100 turns of the TRIUMF H^- cyclotron beam could be accumulated in a radial interval of 2 to 3 cm allowing an extracted pulse in excess of 10^{10} protons every 20 μs (Ri78, Cr83). Such a pulse at 250 MeV and incident on a Ta target would produce about half the neutrons as an ORELA 5-ns pulse. These schemes and their limits have not been fully evaluated in this study. They may provide a cost-effective ORELA replacement source.

5.4 CONVENTIONAL SYNCHROTRONS

Perhaps the most cost-effective accelerator for a moderate-intensity spallation neutron source for condensed-matter TOF measurements is a conventional alternating-gradient synchrotron. Two operating sources are synchrotrons: one of the two sources under construction is a synchrotron, and the 1978 ANL proposal and possible KEK proposal are for synchrotrons. The natural pulse widths and repetition rates from these machines are near optimum for condensed-matter TOF studies. However, a conventional synchrotron does not seem appropriate for an ORELA replacement source since the cyclically-excited magnets would limit the pulse repetition rate to a low value, probably 60 Hz. Consequently, a pulsing mode for MeV TOF measurements would be very difficult to obtain.

5.5 FFAG SYNCHROTRON

The pulse rate problem of a conventional synchrotron could be overcome with a fixed-field, alternating-gradient (FFAG) synchrotron. These machines were extensively studied during the early

1960s by the Midwestern University Research Association. Argonne National Laboratory (ANL) has resurrected this idea for a very large spallation source (Kh83). The fixed field allows a much higher pulse repetition rate, a larger space charge limit per pulse, a more efficient rf system, and engineering and maintenance simplification. The acceleration and storage functions, if needed, could be combined in a single device. A 200- to 400-MeV FFAG, perhaps operated in a harmonic mode, could possibly provide a very cost-effective ORELA replacement source. This option has not been thoroughly investigated for this report.

5.6 PRBS PULSING

If the micro or macropulses from an accelerator were switched on and off following a pseudorandom binary sequence (PRBS), the resulting neutron pulses would follow the PRBS. In this case, neutrons with different energies originating from different pulses would overlap in TOF and would be detected in an energy-mixed TOF spectrum. This energy-mixed spectrum could be unfolded mathematically to yield the usual energy-unmixed TOF spectrum. With this scheme, for example, a slightly modified and truncated PIGMI accelerator would provide an ORELA replacement source. Such pulsing modes were studied for ORELA and found, in general, to be unsatisfactory because of the time shape of the TOF spectra normally measured at ORELA (La80). These conclusions would also be valid for a proton-spallation source. In particular, the PRBS method gives advantages only when there are large beam uncorrelated backgrounds or when the neutrons of interest are more intense than those with which they overlap in TOF. For cross-section measurements, this is usually not the case.

5.7 COLLECTIVE ACCELERATORS

"Collective accelerators make use of the electric and magnetic fields of more-or-less purposeful assemblies of charged particles in the region of the accelerated particles, for acceleration, for focusing or for both" (Co81). A good discussion on the work in collective accelerators is given by Olson and Schumacher (Ol79). Most concepts for collective accelerators are in the proof-of-principle stage and require more research and development in order to build a prototype, let alone an accelerator to be used as a research instrument. Nevertheless, this field holds great promise.

6. CONCEPTUAL DESIGN STUDIES

Because no conventional accelerator seemed adequate for an ORELA replacement source, two conceptual design studies were performed at our request by the LANL Accelerator Technology Division. The first study by Wangler, Boyd, Crandell, and Stokes (Wa81) is for a large linac capable of accelerating 2×10^{11} protons per micropulse up to 200 MeV. At the rf 40-MHz repetition rate, these micropulses correspond to a beam current of 1.3 A. The design is for 1000 equally spaced micropulses per second. Because of the large capital and operating cost for this system, a second more-detailed conceptual design study was performed by Jason and Lawrence (Ja84) for a 250-MeV accumulator ring and transport compressor line fed by a truncated PIGMI type linac. This system produces pulses containing 6×10^{10} protons at a rate of 5000 Hz. In this section the results of these two studies are briefly summarized. The main goal for these studies was to achieve the best possible short-pulse mode. The less difficult longer-pulse modes follow naturally with additional hardware from these short-pulse modes.

6.1 LARGE LINAC

The motivation for this study was the hope that recent developments in linac technology, most notably the RFQ, might make possible a low-cost pulsed linac which could be directly used as an ORELA replacement source. The main goal of the study was to design the best 200-MeV linac capable of accelerating about 5×10^{11} protons per micropulse at a rate of up to 1000 equally-time-spaced pps. At output, the beam spot was to be less than 4 cm in diameter and the pulse width less than 1 ns. The resulting design, outlined in Fig. 7, is capable of accelerating 2×10^{11} protons per micropulse. It consists of a 200-keV duopigatron multiaperture ion source followed by a beam chopper, a 40-MHz RFQ from 0.2 to 5 MeV, a 80-MHz DTL from 5 to 40 MeV, and a 160-MHz DTL from 40 to 200 MeV.

The heart of the system is the 40-MHz RFQ since, except for the ion source, the current-limit bottleneck occurs in this structure. This RFQ is designed to accelerate the maximum beam current. The current limit occurs at the end of the bunching section at 2.2 MeV where the transverse and longitudinal current limits are balanced. The 5-MeV output energy of the RFQ is a compromise between a low energy needed for efficient acceleration and a high energy needed to permit an rf frequency doubling into the DTL. The calculated macropulse current limit, averaged over one 25-ns rf period, is 3.1 A, and good performance could be expected with an operating current around 2 A which corresponds to 3×10^{11} protons/micropulse. The parameters of the RFQ are listed in Table 9. The peak rf power is calculated assuming a 4-vane cavity without a coaxial manifold.

Table 9. Large-linac RFQ design parameter summary (Wa81)

Ion	H^+
Frequency (MHz)	40
Input Energy (MeV)	0.20
Output Energy (MeV)	5.00
Peak Surface Field (MV/m)	17.5
Peak Current Limit (A)	3.1
Nominal Peak Current (A)	2.0
Nominal Protons per Bunch	3.1×10^{11}
Normalized Acceptance (cm-mr)	$8.3\ \pi$
Initial Synchronous Phase (deg)	-90°
Final Synchronous Phase (deg)	-38°
Final Modulation Parameter	2.25
Average Radius (cm)	6.18
Length (m)	14.4
Peak rf Power (MW)	5.4

The pulsed ion source to feed the RFQ would require research and development, would need to produce a peak current of 2 A at 200 keV within the RFQ normalized acceptance of 8.3 π cm-mr, and would need to produce 1-μs-wide pulses at 1000 Hz. The time-averaged beam current would be no more than about one mA. A candidate for such an ion source is a duopigatron multiaperture extraction column such as the one developed at Chalk River (Sc79). Measurements made on their seven-aperture source have shown beams with 40.5 mA per beamlet within an effective normalized emittance of about 0.1π cm-mr per beamlet, including the geometrical dilution factor. The quoted emittance corresponds to 95% of the beam of which 70% is estimated to be H^+. In order to obtain 2 A of H^+, a 7×7 array would be required whose corresponding normalized emittance would be 4.9π cm-mr. A pulse width as

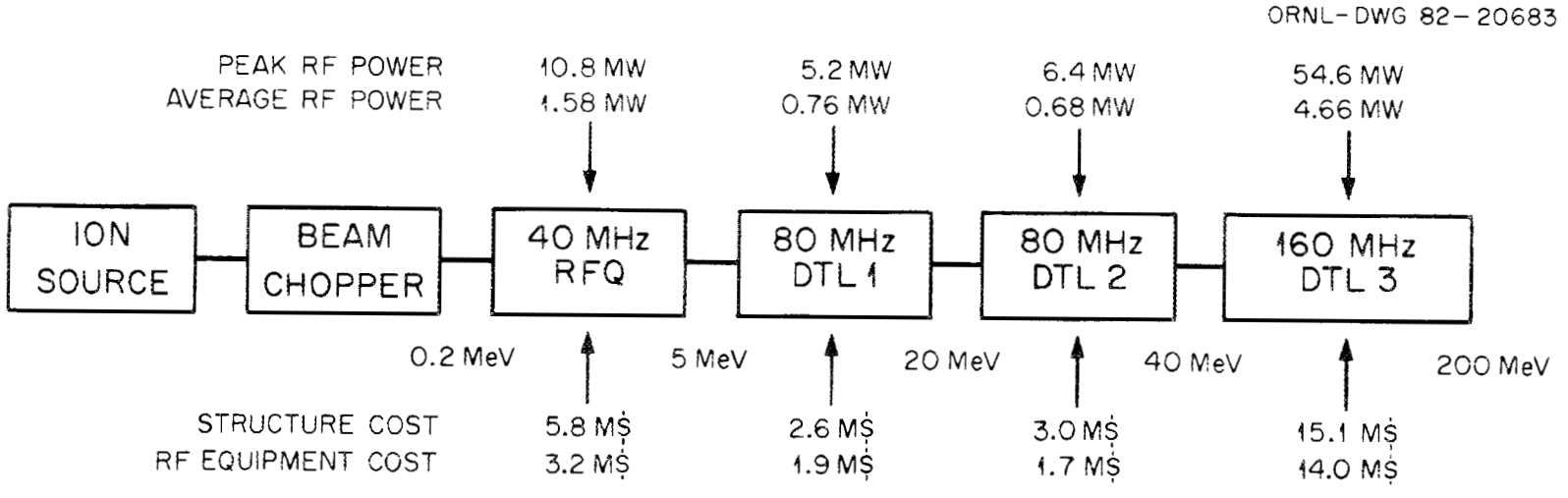

Fig. 7. Block diagram for the large proton linac with peak rf power requirements, average rf power requirements at 1000 pps, structure cost, and rf equipment cost for each accelerator section. The total average rf power requirement is 7.7 MW and the total linac manufacturing cost is $47M (1981). The average rf power cost would be proportional to the repetition rate.

small as about 1μs seems feasible with pulsed extractor electrodes. These 1-μs-wide pulses could be used directly for a long pulse mode producing a train of 40 micropulses. For shorter pulse modes fast-beam choppers similar to that employed at LAMPF would be used. For the 1-micropulse (short-pulse) mode, a 25-ns beam pulse would be required at the input to the RFQ which seems feasible. The accelerator would compress this input 200-keV 25-ns pulse into an output 200-Mev 1-ns pulse.

Table 10 lists some of the parameters for the DTLs. The common FOM used to characterize the efficiency of linac structures is the effective shunt impedance per unit length, a quantity which should be as large as possible. For these DTLs, the cell geometries are similar to those of PIGMI in order to give optimized shunt impedances. Constant-length constant-strength magnetic quadrupoles in a FODO lattice configuration would provide transverse focusing. Because the shunt impedance increases as the square root of the rf frequency, the first DTL occurs at twice the frequency of the RFQ and a second frequency doubling occurs at 40 MeV. A combined adiabatic-damping method and phase-jump method are employed to allow the frequency doublings to occur at the lowest possible energies. In addition, the geometry of the 80-MHz DTL is changed at 20 MeV to allow a further increase in shunt impedance. It is believed that this design gives an optimum solution for the DTL. Acceleration to higher energies would, of course, be possible with additional structures.

Table 10. Drift tube linac design parameter summary (Wa81)

Parameter	80 MHz Tank 1	80 MHz Tank 2	160 MHz Tank 3
Frequency (MHz)	80	80	160
W_i (MeV)	5	20	40
W_f (MeV)	20	40	200
Peak Surface Field (MV/m)	17	17	23.8
E_o (MV/m)	2.585	2.347	3.66
Initial Synchronous Phase (deg)	-50	-41.5	-45
Final Synchronous Phase (deg)	-41.5	-40	-38
Bore Radius (cm)	4.5	4.5	4.5
Length (m)	10.4	12.0	84.4
Power (MW)	1.67	2.04	27.3

A numerical simulation was made of the beam dynamics of the RFQ and the DTLs using the computer codes PARMTEQ and PARMILA, respectively. These programs trace protons which are generated with random initial coordinates chosen from distributions of input beam parameters. Both the effects of external focusing forces and internal space charge forces were included. Table 11 gives the transmissions for the RFQ and two DTLs. If 2 A of cw current are input to the RFQ, micropulses containing 2×10^{11} protons are obtained at 200 MeV. For this simulation, only protons within the 90% contour level of the longitudinal phase space output from one structure were input to the next structure so the current estimate conservatively contains two additional 90% transmission factors. Full-width output beam characteristics at 200 MeV for the 90% contour are listed in Table 12. The output beam time spread is about 1 ns and the transverse beam size is about 1.5 cm $\times$ 3.0 cm.

Table 11. Linac transmissions (Wa81)

	T (%)
RFQ	87
80 MHz DTL	95
160 MHz DTL	99

Table 12. Estimated full-width output beam characteristics at 90 percent contour (Wa81)

ΔW (MeV)	10
$\Delta\phi$(deg)	54
Δt (ns)	0.94
Δx (cm)	1.5
Δy (cm)	3.0
ϵ_n(cm-mr)	4.5 π

This conceptual design meets the requirements for an ORELA replacement source. One 200-MeV proton on Ta produces 1.5 fast neutrons so 2×10^{11} protons/micropulse would produce 3×10^{11} neutrons/micropulse which is tenfold larger than an ORELA 5-ns pulse. One thousand equally spaced micropulses per second would provide an acceptable short-pulse mode. A two-micropulse train would produce 6×10^{11} neutrons per 25-ns pulse, a three-micropulse train would produce 9×10^{11} neutrons per 50-ns pulse, etc., and a 0.5-μs macropulse of 20 micropulses would produce 0.6×10^{13} neutrons, 50-fold larger than an ORELA 40-ns pulse and 100-fold larger if the ORELA pulse is discounted for gamma flash.

The rf power requirements for this system are disappointingly large and are listed by structure on the top of Fig. 7 for operation at 1000 pps. These sum to 7.7 MW! ORELA presently requires 0.3 MW of rf power at 1000 pps. The time-averaged power requirements are the products: (peak rf power into the structures) $\times$ (structure rf fill time) $\times$ (rf fills per second). The peak rf power levels were chosen to be a factor of four larger than the copper dissipation power for the 80-MHz DTLs and two times larger for the RFQ and 160-MHz DTL. With these overdrive power levels, 146 μs, 145 μs, 106 μs, and 86 μs are required to fill the RFQ, 80-MHz DTL-1, 80-MHz DTL-2, and 160-MHz DTL structure, respectively. The structures must be filled for each micro or macropulse. Operation for 5000 hours per year at an average rate of 800 pps would require 3.0×10^4 MWk of rf power. An efficiency of 50% and a cost of \$0.05/kwh results in an annual rf power cost of \$3.0 million. The requirement for intense micropulses leads to a linac operated at low frequencies, which implies long fill times, low energy efficiencies, and large power cost.

The component costs for this linac are listed in the lower part of Fig. 7. These costs in 1981 dollars are based on approximate formulae developed at LANL using the material and fabrication cost only for several ion linacs. The summed structure cost is \$26.7 million, the summed rf equipment cost is \$20.7

million, and the summed total cost is $47.4 million. This is only the manufacturing cost of the linac and excludes the cost of the ion source, fast chopper, and output beam line. It does not include research and development, engineering, and testing costs. It does not include building, utilities, escalation, and contingency costs. The complete cost for this system could be in excess of $100 M. A much more complete dicussion of this system is given in ref. Wa81.

6.2 LIRIC (LINAC-RING COMPRESSOR)

The motivation for this study was the hope that an accumulator ring (AR) filled by a small linac would provide a more cost-effective ORELA replacement source than the large linac without an AR. In addition, the existing PIGMI type linac technology could be used. A schematic of the resulting Linac-Ring-Compressor (LIRIC) system is shown in Fig. 8. A 250-MeV H^- PIGMI linac fills with multiturn injection an AR which restructures the linac beam to be suitable for neutron TOF measurements. In particular, the AR has a circulation time of 600 ns and, in the short-pulse mode, is filled 833 times a second. After each fill and adiabatic bunch compression the AR contains six 6-ns-wide circulating pulses with equal 100-ns spacings. These 6-ns-wide pulses are sequentially ejected into a transport line which compresses them down to 1-ns-wide pulses at the neutron-producing target. On target, 5000 equally time-spaced pulses are produced, each containing 150 PIGMI micropulses. This conceptual design is both detailed and partially optimized. One of the major parameters of this optimization is the number of linac micropulses per group used to fill the AR. A value of five micropulses per group is assumed for this brief summary.

Table 13 lists the linac parameters for this system which can be met by a modified PIGMI capable of accelerating the reference design (Ha81) 28 mA of macropulse current (4×10^8 protons/micropulse). The accelerator would consist of a 30-keV H^- ion source, a 440-MHz RFQ from 30 keV to 2.5 MeV, a 440-MHz DTL from 2.5 to 125 MeV, and a 1320-MHz CCL from 125 to 250 MeV. Two sets of linac parameters are listed. The parameters for the shortest linac (64 m) were obtained by minimizing the accelerator capital cost without regard for power consumption, whereas the parameters for the longest linac (121 m) were obtained by minimizing the accelerator capital cost and approximate ten-year rf power cost. The 121-m linac would cost $2.5 million more than the 64-m linac, but would save $5.0 million in escalated rf power cost over a ten-year period. Operation for 5000 hours per year with a power cost of $0.05/kWh results in an annual rf power cost of $0.42 million using existing klystrons with the 121-m linac.

Figure 9 shows the linac output pulse structure for the short-pulse mode with successively increasing magnification. The linac rf would be pulsed on and off at a rate of 833 Hz (1200 μs spacings). Each rf on pulse would produce a 18-μs-long beam macropulse. Using a helical chopper, positioned between the RFQ and DTL, each macropulse would be structured to contain 180 micropulse groups with 100-ns spacings. Each group would contain five micropulses with 2.27-ns spacings. The AR would be filled using H^- injection by overlaying each macropulse 30 times around the ring circumference, producing six stored bunches with spacings of 100 ns with each bunch containing 150 linac micropulses or 6×10^{10} protons.

The H^- beam is transported to the AR by a conventional achromatic beam line system about 60 m long. This transport system contains a 2.0-MV side-coupled rf cavity operating at 440 MHz which reduces the beam momentum spread from 0.3% to the required 0.03% for capture in the ring rf system. This cavity is 2.1 m long and requires on a time-averaged bases 2.1 kW of rf power.

Continuous 30-turn injection into the ring is achieved by stripping the H^- ions to protons by passage through $\sim$60 $\mu g/cm^2$ carbon foil located in a ring straight section. A system of orbit bump magnets distorts the equilibrium ring orbit vertically during injection to approximately position the H^- beam

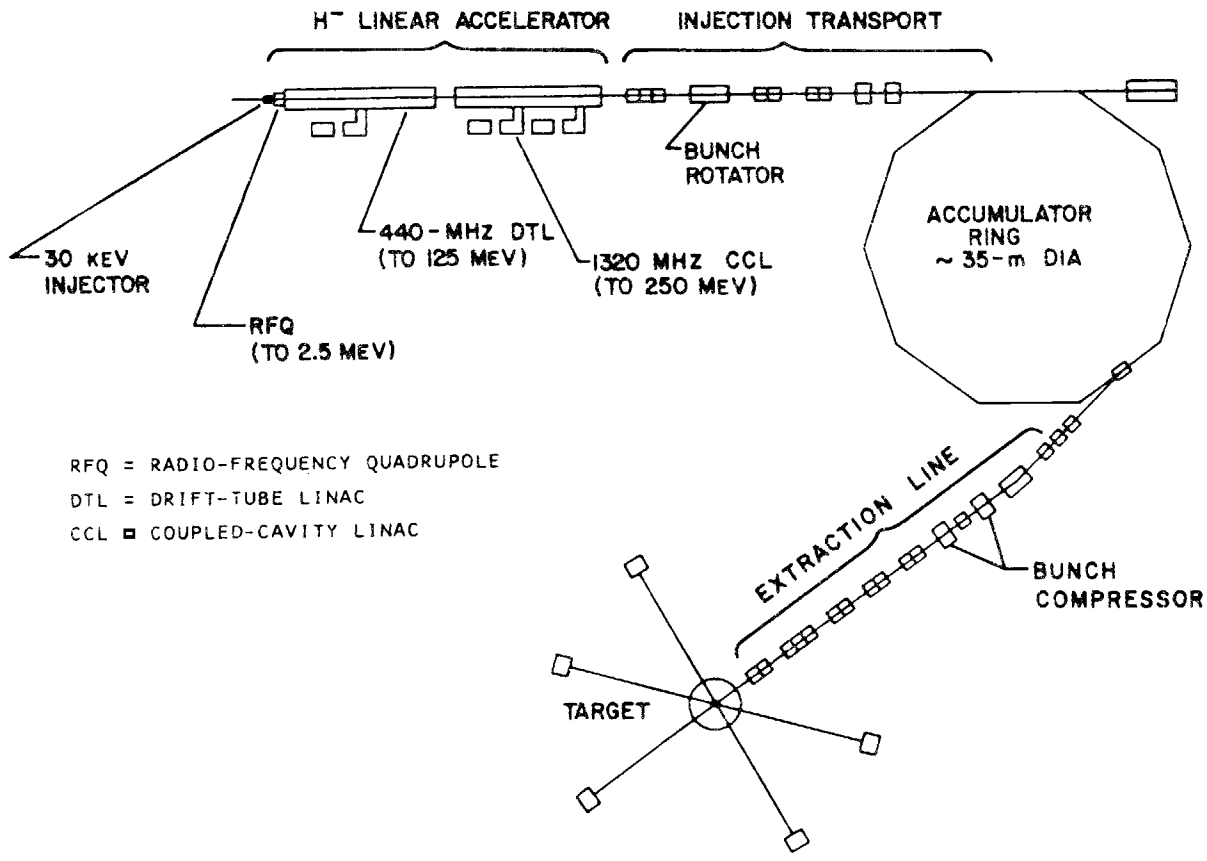

Fig. 8. Conceptual design for a 250-meV Linac-Ring-Compressor (LIRIC) neutron source. In the short-pulse mode, macropulses are overlayed 30 times in the ring forming 6-ns-wide pulses each containing 6×10^{10} protons. These protons are compressed to be 1 ns wide at the target by the 70-m-long compressor line. The PIGMI would fill the ring 833 times per second with six circulating pulses giving an on-target repetition rate of 5000 pps. Drawing from (Ja 84).

ORNL-DWG 84-10322

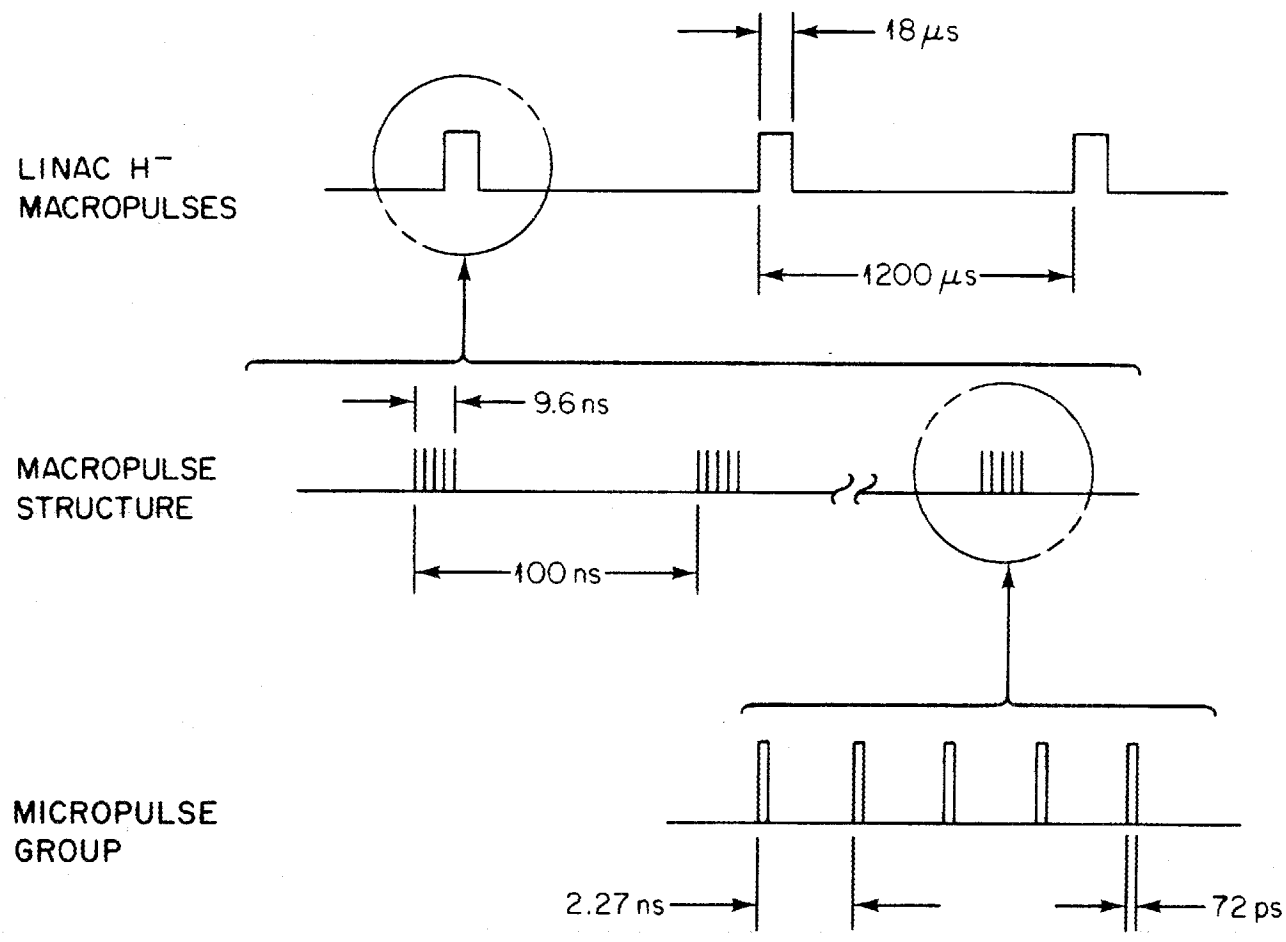

Fig. 9. Detail of the PIGMI beam macropulse structure as prepared for injection into the accumulator ring operated in the short-pulse mode. The rf pulses would be 26 μs and 3 μs longer than the 18μs beam macropulses for the DTL and CCL, respectively, and occur at a rate of 833 Hz. Each macropulse would consist of 180 micropulse groups with spacings of 100 ns. Each micropulse group would consist of five micropulses with spacings of 2.3 ns. The beam macropulse would be overlayed 30 times in the circumference of the accumulator ring which has a circulation time of 600 ns. Drawing from (Ja84).

Table 13. PIGMI H^- Linac Parameters[a] (Ja84)

Macropulse current	28 mA
Time-averaged current	48 μA
Macropulse rate	833 Hz
Macropulse interval	1200 μs
Ions/micropulse	4×10^8
Micropulse interval	2.27 ns
Micropulses/group	5
Group length	9.6 ns
Group interval	100 ns
Groups/macropulse	180
Beam macropulse length	18 μs
Micropulses/macropulse	900

	DTL[b]	CCL[b]
Frequency	440 MHz	1320 MHz
Length	36 or 73 m	28 to 48 m
Fill time	28 μs	3 μs
rf macropulse length	46 μs	21 μs
rf duty factor	3.7%	1.8%
Time-averaged rf power	600 or 300 kW	375 to 225 kW
Klystons	2 or 1 VA812[c]	5 to 3 L5081

[a]For system short-pulse mode, 5000 1-ns-wide pps.
[b]Parameters are an average of 3 and 7 micropulse/group values.
[c]Ten to six 57-kW L3694 klystrons could also be used.

from the linac and the stored beam orbit in the carbon foil. After injection, the stored beam is removed from the foil for storage of up to 1 ms. Pulsed steering magnets may be necessary in the transport line to move the H^+ beam horizontally during injection to achieve the maximum beam density in the ring.

Figure 10 shows a scale drawing of the ring which is similar in design to the PSR. Table 14 lists some parameters of the ring and rf bunching system for the short-pulse mode. The ring lattice is a 10-cell FODO structure with equal-length straight sections and a circumference of 110.4 m for the equilibrium orbit. The dipoles have 7 cm $\times$ 21 cm aperatures. The injected, overlayed, 9.6-ns-wide micropulse groups are captured by two rf bunchers operating at 60 MHz with a voltage increasing from 24 kV to 39 kV. After capture, the stored bunches containing 6×10^{10} protons are 13 ns long and this pulse length is decreased to 6.1 ns by increasing the rf voltage to 500 kV. The compressed bunches have an emittance of 1.15-cm-mrad giving an average beam radius of $\sim$8 mm. No detailed dynamical beam calculations have been performed for long or intermediate pulse modes; however, it is estimated that the ring could hold approximately 4×10^{12} protons in a 400-ns pulse and 2×10^{11} protons in a 20-ns pulse. Each additional pulse width would require a separate rf bunching system and ring input micropulse configuration.

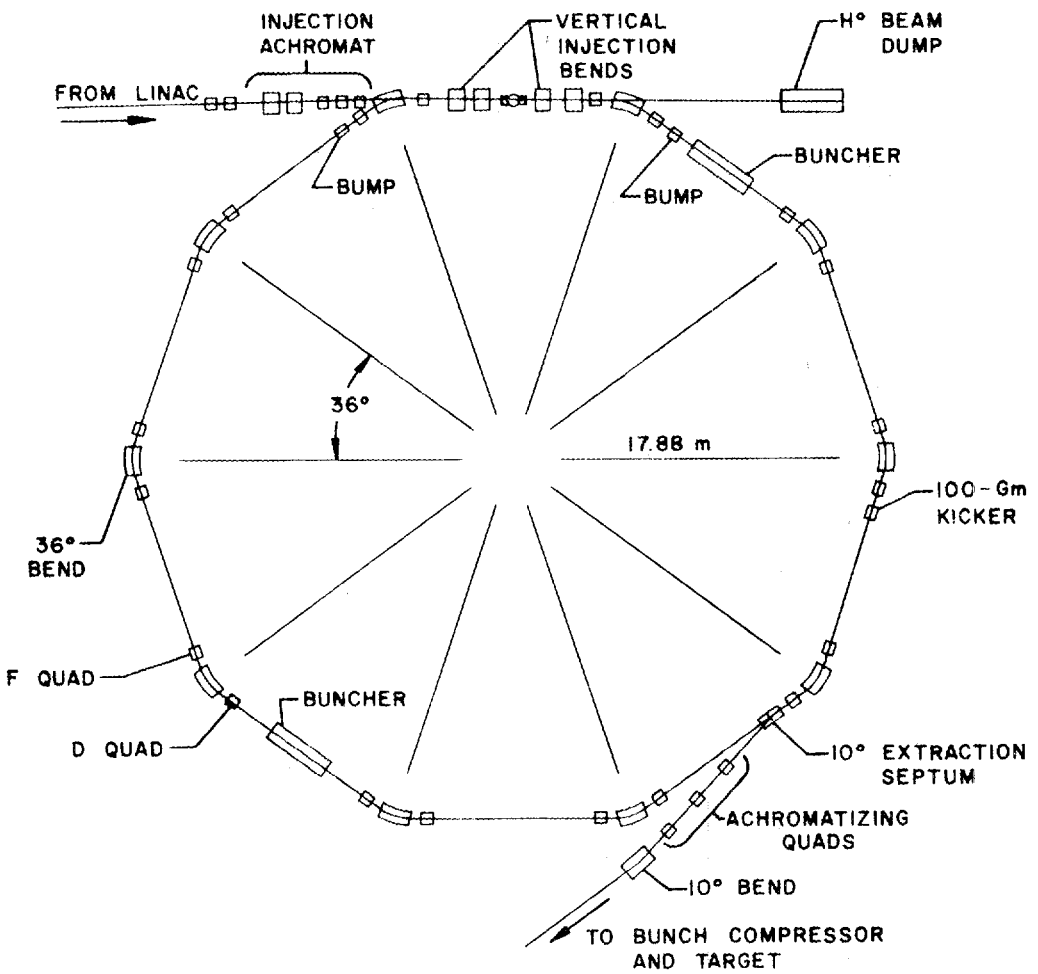

Fig. 10. Scale drawing of accumulator ring which has a diameter of 35.8 m and a circulation time of 600 ns. The two bunchers are for the short-pulse mode only. Intermediate and long pulse widths would require additional rf bunchers, kicker operating modes, and different micropulse structures at PIGMI injection. Drawing from (Ja84).

Table 14. Accumulator ring parameters[a] (Ja84)

Mechanical and Magnet Parameters	
Ring circumference (radius)	110.4 m (17.6 m)
Lattice focusing structure	10 cells, DOFO
Straight section length	8.4 m
Dipole aperture	7 cm × 21 cm
Dipole field	1.2 T
Dipole length	1.27 m
Dipole radius of curvature	2.02 m
Quadrupole length	0.3 m
Quadrupole F gradient	2.78 T/m
Quadrupole D gradient	1.50 T/m
Dynamical Parameters	
Proton velocity	$\beta = 0.613$
Proton mass	$\gamma = 1.267$
Transition γ	2.88
Nominal tunes	$Q_x = Q_y = 3.25$
Average beam radius	~8 mm
Protons/bunch	6×10^{10}
Emittance	1.15 cm·mrad
Final length of bunch	6.1 ns
Circulation time	600 ns
Number of stored bunches	6
Final dp/p	0.3%
rf Buncher Parameters	
Type	Modified drift tube
Number of cavities	2
Frequency	60 MHz
Peak rf amplitude	500 KV
Average rf power	57 kW
Extraction rate	5000/s

[a]For system short-pulse mode, 5000 1-ns-wide pps.

Extraction from the ring would proceed one bunch at a time so that on target 5000 equal time-spaced pps would be produced. Each pulse would be single turn deflected into a septum magnet with a fast-pulsed magnet system providing a 7-cm horizontal displacement. The deflection magnets would be driven by short-pulse high-repetition rate modulators. The repetition rate of 5000/s for this system is a high number, but with research and development could be obtained with a moderate extension of existing kicker technologies and performance levels.

Following extraction, the bunches would be transported to the ORELA-like target by an achromatic beam line containing a high voltage rf compression buncher located about 10 m from the ring. This buncher would reduce the width of the 6-ns extracted pulse to a nominal 1-ns on target. The dp/p of the bunches would be increased from $\pm 0.3\%$ to $\pm 1.0\%$ which would be manageable as long as the following 60-m beam line contained no significant bends. Table 15 contains some parameters for this bunch compression transport line. It is important to appreciate that on-target bunches with a full width of 1.3 ns would be produced. If bunches with a 1.3 ns FWHM were desired the compressor voltages could be significantly reduced. The bunch compressor would only be used for the short-pulse mode.

Table 15. Bunch compression in transport line[a] (Ja84)

Total transport line length	70 m
Buncher-to-target length	60 m
Compression	6.1 ns - 1.3 ns (FW)
Buncher frequency	66.7 MHz
Peak rf amplitude	5.0 MV
Buncher length	8.3 m
Time-averaged rf power	83 kW

[a]Bunch compression would only be used for a short-pulse mode.

The description given in this report is for a 110.4-m-circumference ring filled in a 5 micropulse/group mode. This system is partially optimized. From 3 to 7 micropulses per group would provide an acceptable ORELA replacement source. The various advantages and disadvantages of moving away from this and other nominal design choices is discussed in detail by Jason and Lawence (Ja84). Further optimization studies might well produce a smaller ring circumference than the 110.4-m ring described in this report.

Table 16 attempts to sum the component operating power requirements for the LIRIC system and arrive at an annual energy consumption. The major power consumers would be the PIGMI rf system which is about double that of ORELA and AR magnets. During maximum-level operation, about 3.4 MW would be consumed which is about one-fifth of that required for the large linac.

Table 16. Approximate LRIC annual power use

PIGMI rf[a]	1.5 MW × 5000 hr =	7,500 MWh
PIGMI miscellaneous	0.25 MW × 8760 hr =	2,200
Injection transport	0.20 MW × 8760 hr =	1,750
Injection rf buncher[a]	0.006 MW × 5000 hr =	30
AR magnets	0.60 MW × 8760 hr =	5,300
AR rf buncher[a]	0.163 MW × 5000 hr =	800
AR miscellaneous	0.20 MW × 8760 hr =	1,750
Extraction transport	0.20 MW × 8760 hr =	1,750
Extraction rf buncher[a]	0.24 MW × 5000 hr =	1,200
	3.4 MW	22,000 MWh/year

[a]35% efficiency assumed.

Jason and Lawence give a detailed cost estimate for this system. Their cost summary is shown in Table 17 in terms of 1983 dollars and equivalent manyears for research, development, engineering, and installation. They estimate a professional/nonprofessional staff ratio of 3/5. Allowing $65K per FTE manyear, a 10% contingency for buildings and utilities, and a 30% contingency for the high-technology items results in an unescalated total cost of $43M (1983). About half of the cost would be for the PIGMI linac. No costs are included in this estimate for the additional hardware required for intermediate and long pulse modes. However, the cost estimates are for a very long linac and perhaps a shorter one would be built. The resulting savings would offset the cost for longer pulsing modes.

This second conceptual design also meets the requirements for an ORELA replacement source, has similar neutron intensities, and both smaller construction and power costs than the large linac. One 250-MeV proton produces 2.3 fast neutrons, so 6×10^{10} protons in a 1-ns pulse would produce 1.4×10^{11} fast neutrons, 4.5-fold more than an ORELA 5-ns pulse. However, with its fivefold faster pulse rate than ORELA, it would produce over 20 times more fast neutrons per second for TOF measurements for which the 5000 pps could be used. In the MeV region, it would be equivalent to the WNR-PSR facility operated in the short-pulse mode (Au80). Pulses 400-ns wide would produce 70 times more fast neutrons than an ORELA 40-ns pulse and 30-fold less than a WNR-PSR 270-ns pulse.

It is important to appreciate that at these proton intensities the AR would be at its space-charge limit, so increased neutron intensities would be difficult since the energy of the system and linac pulsing parameters would also be fixed. The need for a small beam radius is the main factor limiting the proton intensity per pulse in the ring. In particular, the number of stored protons per pulse is approximately proportional to $A\beta^2\gamma^3$ where A is the cross-sectional area of the beam, β is the relativistic velocity ratio, and γ is the relativistic mass ratio. This $\beta^2\gamma^3$ factor gives an 800-MeV AR an eightfold advantage over a 250-MeV AR. This factor, plus the increased fast neutron yield from 800-MeV protons for the WNR-PSR, is overcome in the short-pulse mode with this conceptual design by the increased repetition rate and storage of 5-ns-wide pulse with external compression. In fact, the LIRIC system short-pulse mode probably produces a more desirable neutron flux for cross-section measurements than the short-pulse mode of the WNR-PSR system. For intermediate- and long-pulse modes these factors, favoring higher energies, cannot be overcome except for some target-moderator advantages of lower-energy protons.

Table 17. Cost summary from Jason and Lawrence (Ja84)

Item	Fabrication/Procurement ($M 1983)	Staff (FTE-yrs)
Linac	11.1	70
Transport	2.3	37
Ring	2.9	50
Controls	1.5	35
Buildings and utilities	6.4	8
Totals	24.2	200

Similarly, it is important to appreciate that, in principle, large gains in intensity can be gained by small increases in operating energy. This increase comes from the $\beta^2\gamma^3$ factor and the neutron yield. These factors combine to give 300-MeV and 350-MeV AR twofold and threefold intensity advantages over a 250-MeV AR. The design criteria of 250 MeV was set by the present authors. Perhaps a slightly higher energy would have been a better choice.

7. DISCUSSION AND CONCLUSION

This technical memorandum has reported on the work of the authors who have sought with LANL's aid a preliminary conceptual design for a 10^{15} fn/s ORELA replacement neutron source. ORELA has been compared to other existing or potential neutron sources used for cross section and condensed-matter TOF measurements. It was concluded, at least initially in the study, that a source produced from protons in the 200- to 250-MeV range on an ORELA-like target moderator would probably be the best replacement option. Table 7 lists pulse and intensity desiderata which give, in some cases, a spectrum-averaged 100-fold FOM improvement over ORELA for TOF measurements with only a ten-fold increased source strength. The discussions of Sects. 4 and 5 indicate that these desiderata cannot be met with existing conventional accelerator designs. Because of this, two design studies for this work were performed by the LANL Accelerator Technology Division which are summarized in Sect. 6. The first study was for a large linac and the second study was for a linac-ring-compressor combination.

7.1 COMPARISON OF ORELA TO LANL CONCEPTUAL DESIGNS

A bottom-line comparison of the two LANL conceptual designs with ORELA are given in Table 18. Both conceptual designs, more or less, give 10^{15} fn/s and much improved FOMs for TOF measurements over ORELA. For the short-pulse mode the LIRIC system would provide a factor of two more time averaged intensity than the large linac, whereas on a per pulse basis the converse is true. For the intermediate- and long-pulse modes listed in Table 18 the two systems give similar performance; the large linac has a stronger intermediate pulse, whereas LIRIC has a stronger long pulse. The two conceptual designs have similar merit for TOF measurements. The major advantages of the LIRIC system are its

Table 18. Comparison of ORELA to LANL conceptual designs

Parameter	ORELA[a]	LARGE LINAC	LIRIC[h]
Energy (MeV)	150	200	250
Neutrons/projectile on Ta	0.05	1.5	2.3
Short-pulse mode for MeV-keV neutrons			
Pulse width (ns)	5.0	1.0	1.0
10^{10} fn/pulse	3	30	14
Pulses/s	1000	1000	5000
10^{13} fn/s	3	30	70
Average current (μA)	~100	32	48
Beam power (kW)	15	6	12
Intermediate pulse mode for keV-eV neutrons			
Pulse Width (ns)	20	25	20
10^{10} fn/pulse	10	60	46
Pulses/s	1000	1000	1000
10^{13} fn/s	10	60	46
Average current (μA)	~400	64	32
Beam power (kW)	50	13	8
Long-pulse mode for eV-meV neutrons			
Pulse Width (ns)	40	400	400
10^{10} fn/pulse	13	480	900
Pulses/s	120[b]	120	120
10^{13} fn/s	1.6	58	108
Average current (μA)	~500	61	75
Beam power (kW)	65	12	19
Cost (M$)		~100[d]	43[f]
Power (MW)	1[c]	15[e]	3[g]

[a]Intensities should be discounted by a factor of two for γ-flash. A prebuncher under development may increase the short-pulse intensity by a factor of 2.

[b]1000 pps are available but could not be used for most eV-meV measurements.

[c]Bus-bar power for rf only assuming 32% efficiency and 1000 pps.

[d]Approximately two times the 1981 manufacturing cost for the linac structures and rf equipment.

[e]Bus-bar power for rf only assuming 50% efficiency and 100 pps.

[f]Total 1984 cost from Table 17 which does not include hardware for long and intermediate pulse.

[g]Rough estimate for total from Table 16.

[h]The intermediate and long pulse intensities are simple estimates and are not based on detailed calculations.

twofold smaller capital cost and fivefold smaller power requirements. The major advantage of the large linac is its simplicity. The LIRIC system requires a linac, a accumulator ring, and a compressor line all to operate simultaneously to produce short pulses of neutrons. The large linac requires only a linac to operate; however, the required 2-Ampere pulsed ion source could be a major source of development and operating trouble.

Neither system would provide a neutron source competitive with the WNR-PSR or SNS for condensed-matter studies. The two long pulse cases listed in Table 18 for the conceptual designs would produce about the same moderated neutron flux as IPNS-I. For measurements with neutrons below 1 eV the pulse width of the large linac could be expanded with proportional increases in neutron flux without affecting the resolution. Measurements below 0.1 eV could utilize 3-μs pulses. In addition to expandable pulse widths, the neutron intensity from a large linac, if properly sited, could be increased by adding more acceleraor sections to increase the final energy. Also, a large linac is more interesting in terms of accelerator technology than the LIRIC system. The macropulse current in the LANL conceptual design is one to two orders of magnitude larger than the LAMPF linac and, in fact, is larger than needed for the breeding of fissile material with accelerator beams. Its construction and operation could provide a low duty cycle accelerator proof-of-principle experiment for accelerator breeding. Nevertheless, for only cross-section measurements the LIRIC system is clearly more attractive than the large linac in terms of construction cost, and operating power consumption. For MeV measurements the 5000 Hz pulse rate would also be an advantage.

Figure 11 compares the LIRIC system with ORELA in terms of a FOM for TOF measurements which is similar to that defined by Rae and Good (Ra70) and used by Auchampaugh (Au80). In particular, the number of neutrons per cm^2 per elapsed second incident on an in-beam detector are plotted as a function of neutron energy for a fractional energy interval of 8.8×10^{-4} which corresponds to an equivalent moderator dispersion distance of 22 mm at 50 m. With very short pulse widths, this is the minimum resolution one could obtain at very low energies with a flight path of 50 m. At higher energies, where the time resolution is too broad to achieve this energy resolution at 50 m, the fractional resolution is maintained by increasing the flight-path length. The other requirements for the FOM are similar to those used to construct Fig. 6. That is, the FOM is calculated at the logrithmic center of a decade wide energy interval. The resolution of flight-path-length requirement is calculated for highest energy of the interval and the repetition rate requirement is calculated at the lowest energy of the interval by allowing a factor of four for time overlap assuming a 1/v filter with 1% transmission at overlap. This is a realistic FOM and incorporates all the factors affecting resolution and intensity except counting losses from deadtime and pileup and the non-continuum of flight path lengths.

As shown in Fig. 11, the LIRIC FOM at 100 keV is about two orders of magnitude larger than that of ORELA and this ratio increases to four orders of magnitude at 14 MeV. At 20 eV the LIRIC FOM is an order of magnitude larger than that of ORELA and this ratio increases to 50 at 1 eV. However, from 30 eV to 3 keV, the LIRIC FOM is only about four or five times that of ORELA. The logarithmic average of this FOM increase averaged over logarithmic energy ranges from 1 eV to 30 MeV is about 50. If the ORELA flux is discounted by a factor of two for gamma flash as it should, then in the above sense the LIRIC system provides a 100-fold improvement over ORELA for TOF measurements.

There are several points to be made about the comparison of Fig. 11. First, as mentioned above, the ORELA FOM should be reduced by two on an average for gamma flash. Second, the prebuncher presently under development would have almost no affect on the ORELA FOM below 1 keV. Above about 10 keV the FOM would increase roughly by the compression factor obtained with the prebuncher. Third, development of a ^{238}U target for either LIRIC or ORELA could increase the FOMs by about two for measurements not using a 1/v detector. However, this development would be much simpler for LIRIC than ORELA because of its smaller beam power as listed in Table 18. Finally, the proton energies for the two design studies were fixed at low values by the present authors prior to the

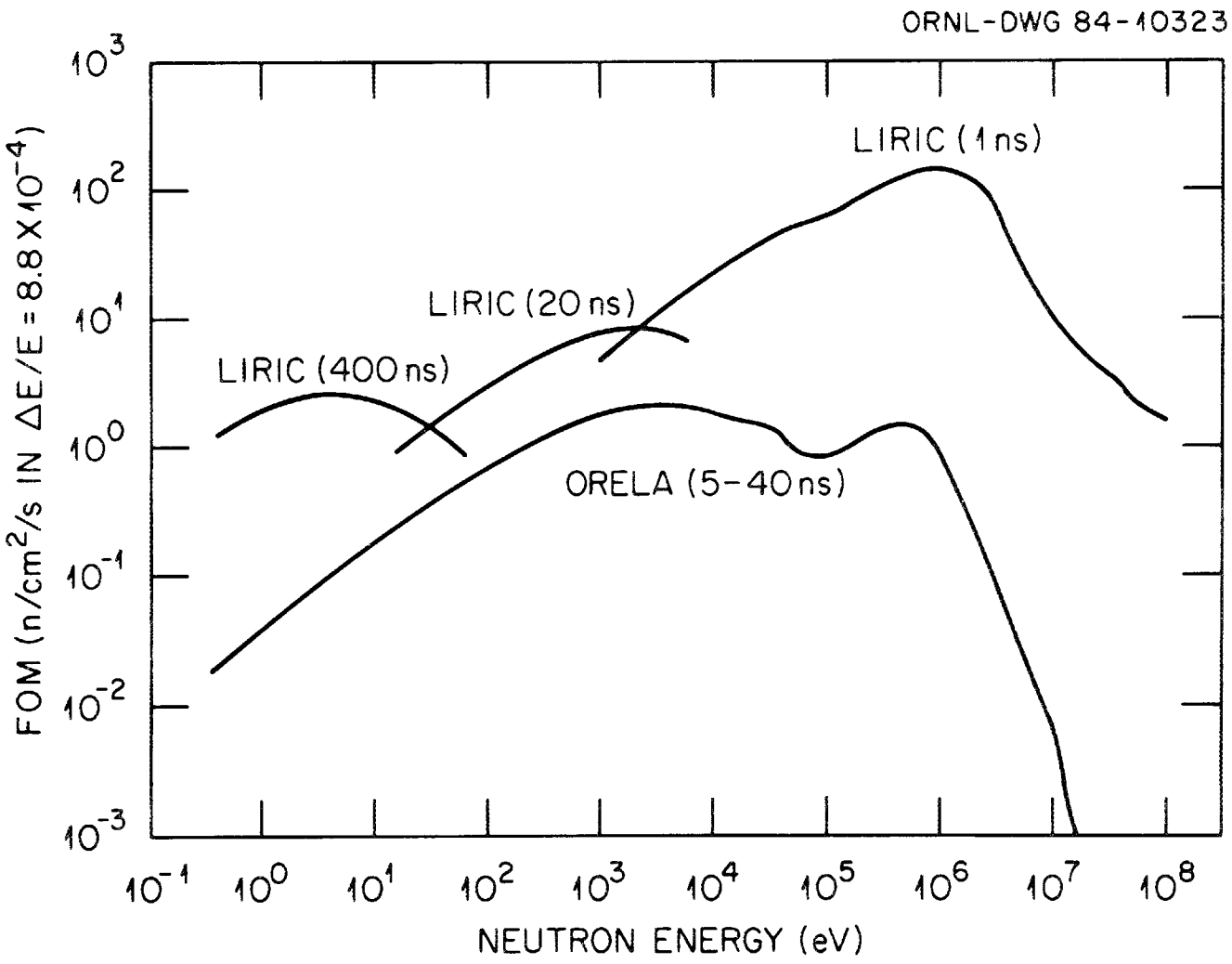

Fig. 11. Comparison of LIRIC and ORELA in terms of a FOM for TOF measurements over decade-wide energy intervals. The ORELA FOM should be reduced by a factor of two to account on the average for gamma flash.

full understanding of the importance of higher energies. This importance stems from the combination of two factors: (1) increased beam power from an accelerator (and accumulator ring) is more achievable through increased beam energy than increased beam current; (2) at the beam energies under discussion the energy required per neutron is rapidly decreasing with increasing energy. A 300-MeV LIRIC system could almost double the neutron intensities from a 250-MeV LIRIC system. If this were technically possible and if the incremental cost were small, this would be a very cost effective change in the LIRIC design. The next subsection attempts to estimate the advantages of increasing the large linac proton energy to the meson threshold.

7.2 RF WAVELENGTH SCALED LARGE LINACS

The beam energies and rf frequencies of the LANL conceptual design for a large linac may not be completely optimum for an ORELA replacement source. Table 19 shows the trends for two other large linac configurations using rf-wavelength (λ) scaled performance, cost, and power consumption estimates with respect to the LANL design. In particular, using the scaling estimates of Lapostolle and Septier (La70) for fixed accelerator geometries with fixed lengths and electric field strengths, one can obtain: beam current $\sim\lambda$, beam brightness $\sim 1/\lambda$, protons/micropulse $\sim\lambda^2$, and the energy per rf fill $\sim\lambda^2$. The LANL-design cost formulas give a structure cost $\sim\lambda^{1/2}$ and imply an rf equipment cost per MW of average rf power $\sim\lambda^{-1/4}$. Results for two large linacs are given. These estimates are exceedingly rough and are only meant to show possible trends with linac parameter changes.

The first scaled estimate is for a 200-MeV linac with the rf frequencies double those of the LANL design. This reduces the neutrons per micropulse by a factor of four, but the time-averaged neutron intensity in the short-pulse single-micropulse mode is maintained by increasing the pulse rate from 1000 to 4000 pps. In an intermediate- or long-pulse mode the neutron production rate is decreased by a factor of two. The rf-power consumption remains unchanged as well as the capital cost of the accelerator; the structure cost decreases but is somewhat compensated by an increased rf equipment cost. There seems to be no gain in increasing the rf frequencies with proportional increases in rf fills.

The second estimate, which shows more promise, is also for a linac with the rf frequencies double those of the LANL design. However, for this case the time-averaged neutron intensity for the micropulse mode is maintained by extending the energy from 200 to 450 MeV with a 640 MHz section to increase the neutrons per proton from 1.5 to 6.0. In the micropulse mode this linac would be pulsed at 1000 pps as in the LANL design. In a long- or intermediate-pulse mode the neutron-production rate would be increased by a factor of two. The rf-power consumption in the micropulse mode is decreased by a factor of three. If the increased beam brightness obtained by going to a higher frequency would at least partially compensate for the loss in target-moderator coupling from going to a higher energy, then a higher-energy higher-frequency linac than the LANL conceptual design may be more attractive. This option is contrary to the original energy specification given to LANL. Such a linac would require a 1-Ampere ion source and would be more on the scale of the machine needed for an accelerator breeder. The values tabulated in Table 19 are purely speculative. In any event the cost of this latter system would be about the same as the 200-MeV LANL design, a factor of two more than the LIRIC system. In addition, a 450-MeV proton beam could pose major target and shielding problems.

7.3 ADDITIONAL WORK FOR A PROPOSAL

This study attempted to determine the accelerator and target-moderator basis for an ORELA replacement neutron source and is not a detailed proposal. Some of the additional material needed to expand this study into a formal proposal are listed below:

Table 19. RF wavelength-scaled cost and performance estimates for large linacs

Parameter	LANL Design[a]	Scaled Estimate[b]	Scaled Estimate[b]
RF frequencies (MHz)	40-80-160	80-160-320	80-160-320-640
Energy (MeV)	200	200	450
Max. rf pulse rate (Hz)	1000	4000	1000
Neutrons/proton	1.5	1.5	6.0
Macropulse current (A)	1.3	0.65	0.65
Short or micropulse mode (< 1-ns-wide)			
10^{10} protons/micropulse	20	5	5
10^{10} fn/micropulse	30	7.5	30
pulses/s	1000	4000	1000
10^{13} fn/s	30	30	30
Time averaged current (μA)	32	32	8
Long or macropulse mode (0.4-μs-wide)			
10^{10} protons/macropulse	320	160	160
10^{10} fn/macropulse	480	240	960
pulses/s	120	120	120
10^{13} fn/s	58	29	115
Time averaged current (μA)	61	31	31
Structure cost ($M)	27	19	36
RF equipment cost ($M)	21	24	9
Total equipment cost ($M)	48	43	45
RF power consumption (MW)[c]	15.4	15.4	5.0

[a]Wangler et al. (Wa81).
[b]Estimated from the LANL design using rf-wavelength scaling.
[c]Bus-bar power for rf at maximum pps assuming 50% efficiency.

1. A thorough programmatic justification for a new neutron source would be required. What measurements would be done? Some of this material exists from internal Engineering Physics and Mathematics Division work (Pe78, Pe82, We82).

2. The choice of beam energy would require further justification. The calculations of Alsmiller et al. (Al81) would need to be extended to higher energies, and detailed moderator calculations would need to be performed as a function of beam energy so that the penalties of going to higher beam energies are quantified. Some estimates of shielding and detector problems would also be required. The neutron production rates calculated by Alsmiller et al. (Al81) could require additional experimental verification in this energy range.

3. Other replacement options would require some study. In particular, a FFAG syncrotron could provide a more cost effective system. The advantages and disadvantages of using a higher-energy higher-frequency stand-alone linac would need to be better understood. Some work would need to be done to provide a cost-benefit analysis of going to a higher-energy LIRIC system.

4. The ORELA building, target room, and beam lines exist and almost surely would be utilized. What modifications, if any, to these structures would be required for a 10^{15} fn/s source from proton spallation? Detailed checking of existing shields and analysis of future experimental needs would be required.

5. The siting and additional buildings for the new accelerator system would require study. The system could be constructed south of the ORELA building with the beam entering the ORELA target room diametrically opposite to the present electron beam line. This may be the most optimal siting with respect to the present ORELA beam lines and would allow ORELA operation during most of the construction. The present 165° beam line would become a 15° beam line and the present linac vault would become available for a 0° beam line. The whole question of beam line requires thought.

6. The possible activation problems of the accelerator system, target, target room, and neutron beam lines need to be understood. System activation problems have not been fully addressed in the conceptual design studies.

7. The maintenance and operating cost in terms of manpower, materials, and power consumption would need to be fully understood and documented.

8. The areas requiring hardware research and development would need to be listed and the people and organizations who would perform this research and development would need to be clearly identified.

9. The people and organizations who would provide the detailed design for the system would need to be clearly identified.

7.4 FINAL CONCLUSIONS

This study of acclerator systems to serve as an ORELA replacement neutron source has led to two coneptual design studies of proton machines by the LANL ATD. These conceptual designs meet the requirement for an "average" 100-fold FOM improvement over ORELA and could utilize the present ORELA building, target room, and beam lines. Of these, the LIRIC option seems to clearly provide the more cost-effective neutron source for cross-section measurements; however, the large linac would provide a simplier more flexible option. In any case, using present technology a replacement neutron source for ORELA based on the LIRIC conept would cost about $43M (1984). A replacement source based on a large linac concept could double this cost. The LIRIC design of Jason and Lawrence could easily be near optimal for an ORELA replacement source. It provides a reference design which clearly puts to rest the notion that a new neutron source for cross-section measurements can be cheaply constructed and operated using existing technology. It also provides a reference design against which other possible options and LIRIC design improvements can be measured.

ACKNOWLEDGMENTS

The LANL Accelerator Technology Division is thanked for their kind cooperation in providing the two conceptual design studies without which this work would have indeed been shallow. The support and encouragement of F. C. Maienschein and R. W. Peelle in this study are gratefuly acknowledged. In addition, R. W. Peelle is thanked for a very careful and thorough review of this mauscript. The ORELA staff is thanked for their help.

REFERENCES

Ad82 T. Adachi, *Proceedings of the Meeting on BSF Future Prospects,* KEK Internal 82-6 (1982).

Al66 R. G. Alsmiller, Jr., and H. S. Moran, *Electron-Photon Cascade Calculations and Neutron Yields from Electrons in Thick Targets,* ORNL/TM-1502, Oak Ridge National Laboratory, 1966.

Al70 R. G. Alsmiller, Jr., T. A. Gabriel, and M. P. Guthrie, "The Energy Distributions of Photoneutrons Produced by 150-MeV Electrons on Thick Beryllium and Tantalum Targets," *Nucl. Sci. Eng.* **40**, 365 (1970).

Al79 R. G. Alsmiller, Jr., F. S. Alsmiller, J. Barish, and T. A. Lewis, "Calculations Pertaining to the Design of a Prebuncher for an Electron Linear Accelerator," *Part. Accel.* **9**, 187 (1979). Also see R. G. Alsmiller, Jr., F. S. Alsmiller, and J. Barish, *Calculations Pertaining to the Design of a Prebuncher for a 150-MeV Electron Linear Accelerator: II Radial Motion,* ORNL/TM-5419/VL, Oak Ridge National Laboratory, 1979.

Al82 R. G. Alsmiller, Jr., J. Barish, J. M. Barnes, and R. T. Santoro, *Neutron Production by Protons (190-268 MeV) in a Water-Cooled Tantalum Target,* ORNL/TM-7949, 1981; also *Nucl. Sci. Eng.* **80**, 452 (1982).

Al83 R. G. Alsmiller, Jr., private communication (1983).

Ar81 T. W. Armstrong, P. Cloth, D. Filges, and R. D. Neef, *Theoretical Target Physics Studies for the SNQ Spallation Neutron Source,* Jul-Spez-120, 1981.

Au80 G. F. Auchampaugh, "Status and Comparison of New, Planned, and Upgraded Pulsed White Neutron Source Facilities Since 1970," p. 920 in *Proc. Intern. Conf. on Nuclear Cross Sections for Technology, Knoxville,* NBS-SP-594, National Bureau of Standards, 1980.

Ba81 G. S. Bauer, H. Sebening, J. E. Vitter, and H. Willax, *Feasibility Study for the Spallation Neutron Source (SNQ),* Jul-Spez-113, KFK 3175, 1981.

Be81 A. Bensussan and J. M. Salome, "GELINA: A Modern Accelerator for High Resolution Neutron Time of Flight Experiments," *Nucl. Instr. Methods* **155**, 11 (1978); see also J. M. Salome and R. Cools, "Neutron Producing Targets at GELINA," *Nucl. Instr. Methods*, **179**, 13 (1981).

Bi74 A. Bignami, C. Coceva, and R. Simonini, *Monte Carlo Calculations for the Moderator of the Pulsed Neutron Target of the Geel Linac,* EUR 5157c, 1974.

Br81 R. J. Briggs, D. L. Brix, G. J. Caporaso, T. J. Fressenden, R. E. Hester, R. Melendez, V. K. Neil, A. C. Paul, and K. W. Struve, "Beam Dynamics in the ETA and ATA Linear Induction Accelerators: Observations and Issues," *IEEE Trans. Nucl. Sci.*, NS-28, 3360 (1981).

Ca77 J. M. Carpenter, "Pulsed Spallation Neutron Sources for Slow Neutron Scattering," *Nucl. Inst. Methods*, **145**, 91 (1977).

Ca78 J. M. Carpenter, D. L. Price, and N. J. Swanson, *IPNS A National Facility for Condensed Matter Research,* ANL-78-88, Argonne National Laboratory, 1978.

Ci78 S. Cierjacks, G. Schatz, D. Erbe, and B. Leugers, *Progress Report on Nuclear Data Research in the Federal Republic of Germany,* NEANDC(E)-192 U, Vol. V, p. 1, 1978.

Ci82 S. Cierjacks, *Instrumental Developments in High-Resolution Neutron Measurements,* KFK 3447 B (1982), Kernforschungszentrum Karlsruhe.

Co81 F. T. Cole, "Recent Work in Collective Accelerators," p. 225 in *Proc. 1981 Linear Accelerator Conf., Santa Fe,* LA-9234-C, Los Alamos Scientific Laboratory, 1981.

Co82 C. Coceva, R. Simonini, and D. K. Olsen, "Calculation of the ORELA Neutron Moderator Spectrum and Resolution Function," *Nucl. Instr. Methods* **211**, 459 (1983).

Cr83 M. K. Craddock, "Kaon Factories", *IEEE Trans. Nucl. Sci.*, **NS30**, 1993 (1983).

Da81 J. W. T. Dabbs, private communication (1981).

Fa81 A. Faltens and D. Keefe, "Review of Induction Linacs," p. 205 in *Proc. 1981 Linear Accelerator Conf., Santa Fee,* LA-9234-C, Los Alamos Scientific Laboratory, 1981.

Ha81 L. D. Hansborough, R. W. Hamm, J. E. Stovall, and D. A. Swenson, "An Optimized Design for PIGMI," *IEEE Trans. Nucl. Sci.*, NS-28, 1511 (1981); also T. J. Boyd et al., *The PIGMI Technology,* LA-UR-80-3561, Los Alamos Scientific Laboratory, 1980.

Is81 Y. Ishikawa, "Present Status of the KENS Facility," p. 89 in *Proc. 4th Meeting of International Collaboration on Advanced Neutron Sources,* Tsukuba, Japan, 1981.

Ja84 A. J. Jason and G. P. Lawence, *LIRIC: A Preliminary Design of the Proton Driver for a New ORNL Neutron Source,* LA-UR-83-2807, Los Alamos National Laboratory, 1984.

Jo74 W. Joho, "Application of the Phase Compression - Phase Expansion Effect for Isochronous Storage Rings," *Particle Accelerators* **6**, 41 (1974).

Ke81 G. A. Keyworth, "Present Status and Future Development of WNR," p. 1 in *Proc. 4th Meeting of International Collaboration on Advanced Neutron Sources,* Tsukuba, Japan, 1981.

Ku81 R. L. Kustom, "Intense Pulsed Neutron Sources," *IEEE Trans. Nucl. Sci.* NS-28, 3115 (1981).

Kh83 J. K. Khoe and R. L. Kustom, "ASPUN, Design for an Argonne Super Intense Pulse Neutron Source," *IEEE Trans. Nucl. Sci.* NS-30, 2086 (1983).

La80 G. P. Lawrence, R. K. Cooper, D. W. Hudgings, G. Spalek, A. J. Jason, E. F. Higgins, and R. E. Gillis, "LASL High Current Proton Storage Ring," *Proc. 11th Int. Conf. on High Energy Accelerators, Geneva, July 7-11, 1980,* Experimentia: Supplement **40**, 103 (1981).

La80 N. M. Larson and D. K. Olsen, *Preliminary Study of Pseudorandom Binary Sequence Pulsing of ORELA,* ORNL/TM-6632, Oak Ridge National Laboratory, 1980.

Le76 T. A. Lewis, *ORELA Performance,* ORNL/TM-5112, Oak Ridge National Laboratory, 1976.

Le79 J. E. Leiss, "Induction Linear Accelerators and Their Applications," *IEEE Trans. Nucl. Sci.*, NS-26, 3870 (1979).

Le80 J. E. Leiss, N. J. Norris, and M. A. Wilson, "The Design and Performance of a Long-Pulse Higher Current Linear Induction Accelerator at the National Bureau of Standards," *Particle Accelerators* **10**, 223 (1980).

Lu80 V. I. Luschikov, L. B. Pikelner, Yu. P. Popov, I. M. Frank, E. I. Sharapov, and Yu. S. Yazvitskii, "Selected Topics in Research Program on IBR-2," p. 385 in *Proc. Intern. Conf. on Nuclear Cross Sections for Technology, Knoxville,* NBS-SP-594, National Bureau of Standards, 1980.

Ly80 J. E. Lynn, "HELIOS: The New Harwell Electron Linear Accelerator, and Its Scientific Programme," *Contemp. Phys.* **21**, 483 (1980); also M. S. Coates, "The Harwell Linear Accelerator," private communication (1978).

Ma71 R. L. Macklin, "Gamma Flash Suppression for the ORELA Pulsed Neutron Source," *Nucl. Instr. Methods* **91**, 79 (1971).

Ma78 G. Manning, "The Rutherford Laboratory Spallation Neutron Source," p. 829 in *Proc. Intern. Conf. on Neutron Physics and Nuclear Data,* Harwell, 1978.

Mo75 G. L. Morgan, private communication (1975).

Na79 J. A. Nation, "High-Power Electron and Ion Beam Generation," *Particle Accelerators*, **10**, 16 (1979).

Ol79 C. L. Olson and U. Schumacher, "Collective Ion Acceleration," *Springer Tracts in Modern Physics*, Vol. 84, Springer, N.Y. (1979).

Pe69 N. C. Pering and T. A. Lewis, "Performance of 140 MeV High Current Short Pulse LINAC at ORNL," *IEEE Trans. Nucl. Sci.* NS-16, 316 (1969); also T. A. Lewis, *ORELA Performance*, ORNL/TM-5112, Oak Ridge National Laboratory, 1976.

Pe75 R. W. Peelle, T. A. Lewis, J. T. Mihalczo, H. A. Mook, and R. M. Moon, *Use of ORELA to Produce Neutrons for Scattering Studies on Condensed Matter,* ORNL/TM-4987, Oak Ridge National Laboratory, September 1975.

Pe82 R. W. Peelle, J. A. Harvey, F. C. Maienschein, L. W. Weston, D. K. Olsen, D. C. Larson, and R. L. Macklin, *Neutron Research and Facility Development at the Oak Ridge Electron Linear Accelerator 1970-1995*, ORNL/TM-8225, Oak Ridge National Laboratory, 1982.

Po81 R. E. Pollock, "Coupling Cyclotrons to Other Machines," p. 731 in *Ninth Intern. Conf. on Cyclotrons and Their Applications,* Caen. France, 1981.

Ra70 E. R. Rae and W. M. Good, "Pulsed Accelerator Time-of-Flight Spectometers," *Experimental Neutron Resonance Spectroscopy*, J. A. Harvey, Editor, Academic Press, New York, p. 1, 1970.

Ri78 J. R. Richardson, "Future Directions for Isochronous Cyclotrons," *IEEE Trans. Nucl. Sci.* NS-26, 2436 (1978).

Ru77 G. J. Russell, P. A. Seeger, and R. G. Fluharty, *Parametric Studies of Target/Moderator Configurations for the Weapons Neutron Research (WNR) Facility,* LA-6020, Los Alamos Scientific Laboratory, 1977.

Sc79 M. R. Schubaly, "High Current DC Ion Source Development at RNL," *IEEE Trans. Nucl. Sci.* NS-26, 3065 (1979).

Sc81 U. Schryber, S. Adams, B. Berkes, H. Frei, W. Joho, P. Lanz, C. Markovits, M. Olivo, L. Rezzonico, and N. Schmid, "Status Report of the Injector at SIN," p. 43 in *Proc. Ninth Int. Conf. Cyclotrons and Their Applications*, Caen, France, 1981; also S. Adams, B. Berkes, C. Collins, W. Joho, P. Lanz, M. Olivo, and U. Schryber, "A Proposed New Injector for the SIN Ring Cyclotron," p. 123 in *Proc. 7th Int. Conf. on Cyclotrons and Their Applications,* Basel, 1975.

Sc82 S. O. Schriber, *Canadian Accelerator Breeder System Development,* AECL 7260, 1982.

Tr84 D. Trone, J. M. Salome, and K. H. Bockhoff, "A New Pulse Compression System for Intense Relativistic Electron Beams," preprint, 1984.

Ts81 C. Tschalar, "Spallation Neutron Source at SIN," p. 56 in *Proc. 4th Meeting of International Collaboration on Advanced Neutron Sources,* Tsukuba, Japan, 1981.

Wa81 T. P. Wangler, T. J. Boyd, Jr., K. R. Crandall, and R. H. Stokes, *Conceptual Design Study of a Proton Linear Accelerator to Replace ORELA,* AT-1-81-290, Los Alamos National Laboratory (1981).

Wa82 N. Watanabe, private communication (1982).

We82 C. R. Weisbin, D. Gilai, G. de Saussure, and R. T. Santoro, *Meeting Cross Section Requirements for Nuclear Energy Design,* ORNL/TM-8220, Oak Ridge National Laboratory (to be published).

INTERNAL DISTRIBUTION

1-5. L. S. Abbott
6. R. G. Alsmiller
7. J. B. Ball
8. D. E. Bartine
9. J. W. T. Dabbs
10. G. de Saussure
11. J. K. Dickens
12. G. F. Flanagan
13. C. Y. Fu
14. R. Gwin
15. J. A. Harvey
16-20. D. J. Horen
21. D. C. Larson
22. T. A. Lewis
23. R. L. Macklin
24-28. F. C. Maienschein
29-33. J. A. Martin
34-38. D. K. Olsen
39-43. R. W. Peelle
44-46. F. G. Perey
47. R. B. Perez
48. R. R. Spencer
49. C. R. Weisbin
50. L. W. Weston
51. A. Zucker
52. P. W. Dickson, Jr. (consultant)
53. H. J. C. Kouts (consultant)
54. G. H. Golub (consultant)
55. D. Steiner (consultant)
56. Central Research Library
57. ORNL Y-12 Technical Library
58. Document Reference Section
59. Laboratory Records
60. Laboratory Records - RC
61. ORNL Patent Section

EXTERNAL DISTRIBUTION

62. Office of Assistant Manager for Energy Research and Development, Department of Energy, Oak Ridge Operations Office, Oak Ridge, TN 37831
63-64. Director, Reactor Research and Development, USDOE, Washington, DC 20545
65. S. L. Whetstone, Division of Nuclear Sciences, Office of Basic Energy Sciences, U.S. Department of Energy, Room G-355, Washington, DC 20545
66. E. T. Ritter, Office of High Energy and Nuclear Physics, Division of Nuclear Physics, Department of Energy, M.S. J-309, Washington, D. C. 20545
67. J. E. Leiss, Assistant Director, Office of High Energy and Nuclear Physics, Office of Energy Research, Department of Energy, Washington, DC 20545
68. P. B. Hemmig, Office of Reactor Research and Technology, Physics and Safety, Room F-331, M.S. B-107, Department of Energy, Washington, DC 20545

69. G. F. Auchampaugh, Los Alamos Scientific Laboratory, MS 442, P-3, Los Alamos, NM 87545
70. C. D. Bowman, Los Alamos Scientific Laboratory, P. O. Box 1663, Los Alamos, NM 87545
71. A. J. Jason, Accelerator Technology Division, Los Alamos Scientific Laboratory, P. O. Box 1663, Los Alamos, NM 87545
72. G. P. Lawrence, Accelerator Technology Division, Los Alamos Scientific Laboratory, P. O. Box 1663, Los Alamos, NM 87545
73. T. P. Wangler, Accelerator Technology Division, Los Alamos Scientific Laboratory, P. O. Box 1663, Los Alamos, NM 87545
74. T. J. Boyd, Accelerator Technology Division, Los Alamos Scientific Laboratory, P. O. Box 1663, Los Alamos, NM 87545
75. K. R. Crandall, Accelerator Technology Division, Los Alamos Scientific Laboratory, P. O. Box 1663, Los Alamos, NM 87545
76. R. H. Stokes, Accelerator Technology Division, Los Alamos Scientific Laboratory, P. O. Box 1663, Los Alamos, NM 87545
77. C. H. Poppe, Lawrence Livermore National Laboratory, P. O. Box 808, M.S. L-405, Livermore, CA 94550
78. J. E. Lynn, Nuclear Physics Division, Bldg. 418, Atomic Energy Research Establishment, Harwell, Didcot, Oxon, OX11, ORA, United Kingdom
79. M. Coates, Nuclear Physics Division, Bldg. 418, Atomic Energy Research Establishment, Harwell, Didcot, Oxon, OX11, ORA, United Kingdom
80. J. M. Salome, Central Bureau for Nuclear Measurements, Steenweg naar Retie, B-2440, Geel, Belgium
81. K. H. Bockhoff, Central Bureau for Nuclear Measurements, Steenweg naar Retie, B-2440, Geel, Belgium
82. S. Tanaka, Japan Atomic Energy Research Institute, Tokai Research Establishment, Linac Laboratory, Tokai-Mura, Naka-Gun, Ibaraki-Ken, Japan
83. M. Mizumoto, Japan Atomic Energy Research Institute, Tokai Research Establishment, Linac Laboratory, Tokai-Mura, Naka-Gun, Ibaraki-Ken, Japan

84-110. Technical Information Center, P. O. Box 62, Oak Ridge, TN 37831