JUN 22 1984
DATE ISSUED
466

ornl

ORNL/TM-506/R1&P3

OAK RIDGE
NATIONAL
LABORATORY

MARTIN MARIETTA

ORNL
MASTER COPY

Operating Manual for the Oak Ridge Research Reactor

Part 3

[redacted]

OPERATED BY
MARTIN MARIETTA ENERGY SYSTEMS, INC.
FOR THE UNITED STATES
DEPARTMENT OF ENERGY

This report was prepared as an account of work sponsored by an agency of the United States Government. Neither the United States Government nor any agency thereof, nor any of their employees, makes any warranty, express or implied, or assumes any legal liability or responsibility for the accuracy, completeness, or usefulness of any information, apparatus, product, or process disclosed, or represents that its use would not infringe privately owned rights. Reference herein to any specific commercial product, process, or service by trade name, trademark, manufacturer, or otherwise, does not necessarily constitute or imply its endorsement, recommendation, or favoring by the United States Government or any agency thereof. The views and opinions of authors expressed herein do not necessarily state or reflect those of the United States Government or any agency thereof.

ORNL/TM-506/R1&P3

Operations Division
Reactor Operations Section

OPERATING MANUAL FOR THE OAK RIDGE RESEARCH REACTOR

Part 3

Compiled by

Oak Ridge Research Reactor Staff

Manuscript Completed - April 27, 1984
Date of Issue - June 1984

NOTICE: This document contains information of a preliminary nature. It is subject to revision or correction and therefore does not represent a final report.

Prepared by the
Oak Ridge National Laboratory
Oak Ridge, Tennessee 37831
operated by
Martin Marietta Energy Systems, Inc.
for the
U.S. DEPARTMENT OF ENERGY
under Contract No. DE-AC05-840R21400

Approved by:

J. H. Swanks, Director Operations Division	R. V. McCord, Head Reactor Operations Section	B. L. Corbett Reactor Supervisor

TABLE OF CONTENTS

	Page
LIST OF EXAMPLES	ix
LIST OF FIGURES	xi
LIST OF TABLES	xiii
6. SPECIAL PROCEDURES	6-1
6.1. Pertaining to the Reactor	6-1
6.1.1. Checking Chambers with a Source	6-1
6.1.2. Precautions to Be Used in the ORR Pool	6-2
6.1.3. Large-Facility Leak-Detector System	6-3
6.1.4. Dispersion of ^{16}N Around the Reactor	6-5
6.2. Building 3042	6-5
6.2.1. Operation of the Pneumatic Doors	6-5
6.2.2. The ORR Heating, Air-Conditioning, Ventilating, and Containment Systems	6-9
6.2.3. Normal Off-Gas System	6-23
6.2.4. Pressurizable Off-Gas (POG) System	6-45
6.2.5. Authorization and Documentation of Changes to the System, Operating Manual, and/or Special Operating Instructions	6-62
6.2.6. Building Pressure Data	6-67
6.2.7. Saturday Tours at the ORR	6-67
6.2.8. Operation of the Overhead Crane	6-69
6.2.9. Securing Systems with Locks and Tags	6-70
6.2.10. Use of Mercury in the ORR Building	6-103
6.2.11. Underwater Periscope	6-104
6.2.12. Neutron Radiography Facility (presently on standby)	6-111
7. EMERGENCY PROCEDURES	7-1
7.1. Emergency Electrical Power	7-1
7.1.1. Introduction	7-1
7.1.2. Description	7-2
7.1.3. Precautions	7-4
7.1.4. Operating Procedures	7-5
7.1.5. Reliability Checks	7-8
7.2. Building Cell-Ventilation System	7-12

Page

7.2.1. Description 7-12
7.2.2. Responsibility 7-16
7.2.3. Instrumentation and Controls (ORNL Dwg. P-10167-G121-D) 7-17
7.2.4. Normal Operation 7-24
7.2.5. Emergency Operation 7-29
7.2.6. Performance Checkouts 7-30

7.3. Building 3042 Hot-Cell Ventilation System 7-40

7.3.1. General 7-40
7.3.2. General Operating Conditions for the Systems 7-42
7.3.3. Ventilation Alarm Conditions 7-44
7.3.4. Action to Be Taken if an Alarm Occurs 7-44

7.4. Fire-Protection System at the ORR Cells 7-46

7.4.1. Description 7-46
7.4.2. Indications of a Fire in a Hot Cell 7-47
7.4.3. Actions to Be taken in the Event of a Hot Cell Fire 7-48

7.5. Emergency Cooling for the ORR 7-50

7.5.1. Introduction 7-50
7.5.2. The dc Pony Motors 7-50
7.5.3. Gasoline-Operated Pump 7-69
7.5.4. Shutdown Pump 7-69
7.5.5. Minimum Requirements for Reactor Operation . . 7-70
7.5.6. Loss of Main Cooling Pumps 7-70
7.5.7. Loss of Water from the Reactor Pool and/or Primary System 7-70
7.5.8. Process Water as Reactor Pool Emergency Fill and as Core Emergency Coolant 7-72
7.5.9. Summary 7-72

7.6. Emergency Services 7-76

7.6.1. Introduction 7-76
7.6.2. Fire Department 7-76
7.6.3. Guard Department 7-77
7.6.4. Dispensary 7-78
7.6.5. Maintenance 7-79
7.6.6. Accidents 7-79

7.7. Evacuation Procedures 7-80

Page

7.7.1. Emergency Personnel 7-80
7.7.2. Responsibilities of Emergency Personnel . . . 7-81
7.7.3. Laboratory Emergency Signals 7-82
7.7.4. Laboratory Evacuation (Emergency Outside the Section Area) 7-83
7.7.5. Local Area Evacuation (Emergency Outside the Section Area) 7-84
7.7.6. Use of the Building for Shelter 7-86
7.7.7. Building Evacuation - Emergency in Building 3001 7-87
7.7.8. Building Evacuation - Emergency in Buildings 3004 and 3005 7-91
7.7.9. Building Evacuation - Emergency in Building 3010 7-92
7.7.10. Building Evacuation - Emergency in Building 3042 7-96
7.7.11. Response to Air Attack Warnings 7-101
7.7.12. Evacuation Procedure Drills 7-102
7.7.13. Maintenance Policy for Building Evacuation Equipment 7-102

7.8. Emergency Actions 7-104

7.8.1. Introduction 7-104
7.8.2. Filling the Reactor Heat-Exchanger Pit 7-106
7.8.3. Remote Microphone for Building 3042 Public-Address System 7-108
7.8.4. Emergency Action for Gross Contamination in the ORR Primary Water System 7-108

7.9. Abnormal-Operation Instructions 7-111

7.9.1. Introduction 7-111
7.9.2. AOI 1: Leaks in the Primary Cooling System . . 7-112
7.9.3. AOI 2: Rapid Loss of Pool Water 7-116
7.9.4. AOI 3: Loss of TVA Electrical Power 7-118
7.9.5. AOI 4: Reponse to Setbacks, Reverses, and Scrams 7-120
7.9.6. AOI 5: Loss of Instrument Air 7-127
7.9.7. AOI 6: Loss of Potable, Process, or Demineralized Water Systems 7-129
7.9.8. AOI 7: Loss of Steam 7-130
7.9.9. AOI 8: Loss of One or More Reactor Primary Cooling Pumps 7-133
7.9.10. AOI 9: Loss of Pool Cooling System 7-134
7.9.11. AOI 10: Loss of Secondary Cooling System . . 7-135
7.9.12. AOI 11: Loss of Shutdown Cooling Capability . 7-136
7.9.13. AOI 12: Uncontrolled or Unexpected Changes in Reactivity 7-138

Page

7.9.14. AOI 13: Stuck Control Rod 7-139
7.9.15. AOI 14: Dropped Control Rod 7-139
7.9.16. AOI 15: Loss of Control-Rod Position Indicator System 7-141
7.9.17. AOI 16: High Radiation Level in the Reactor Primary Cooling System 7-142
7.9.18. AOI 17: High Radiation Level in the Secondary Water Systems 7-143
7.9.19. AOI 18: Loss of Building Containment 7-144
7.9.20. AOI 19: High Radiation Level in the Reactor Building or Off-Gas Systems 7-145
7.9.21. AOI 20: High Radiation Level in the Liquid Waste System 7-147

8. RECORDS 8-1

8.1. Data Accumulation 8-1

8.1.1. Introduction 8-1
8.1.2. Routine Daily Report Forms 8-1
8.1.3. Other Routine Report Forms 8-49
8.1.4. Information Required in the Log 8-72

8.2. Data Summation 8-73

8.2.1. ORR Weekly Report Form (Example 8.27) 8-73
8.2.2. The Quarterly Report 8-73

8.3. Mechanical Maintenance 8-76

8.3.1. Maintenance Program 8-76
8.3.2. Hoisting Equipment Inspection 8-78

9. RADIATION AND CONTAMINATION CONTROL 9-1

9.1. Facility Radiation and Contamination Alarm System (FRCAS) Building 3042 9-1

9.1.1. Introduction 9-1
9.1.2. Description 9-2
9.1.3. Operational Procedures 9-14

9.2. Establishing a Contamination Zone and Handling Contaminated Supplies 9-21

9.2.1. Introduction 9-21
9.2.2. Precautions 9-21
9.2.3. Procedure 9-22

Page

10. SAFETY 10-1

10.1. Introduction 10-1

10.2. Pool Work 10-1

10.3. Pool-Basin Entry 10-2

10.4. Bosun's Chair 10-2

10.5. Chemical Hazards 10-2

10.6. Miscellaneous 10-3

10.7. Safety Showers and Eyewash Basins 10-4

11. MAINTENANCE MANAGEMENT AT THE ORR COMPLEX 11-1

11.1. Introduction 11-1

11.1.1. Area and Responsibilities 11-1

11.2. Mechanical and Electrical Maintenance 11-4

11.2.1. Scheduling 11-4
11.2.2. Procedures 11-5
11.2.3. Documentation 11-6
11.2.4. Control 11-7
11.2.5. Auditing 11-8

11.3. Electronic and Process Instrumentation 11-9

11.3.1. Category I - Minimum Control and Safety Instrumentation Required for Startup and Continuity of Operation 11-9
11.3.2. Category II - Other Instrumentation Not Falling into Category I 11-9

11.4. Inspection of Specialized Equipment 11-10

11.5. Operational Maintenance Activities 11-11

11.5.1. Operability Tests 11-12
11.5.2. Spare Parts Stock 11-14
11.5.3. Auditing of Maintenance by Operations 11-14
11.5.4. Auditing by Independent Committees 11-15

11.6. Records 11-15

Page

12. INFORMATION AND JOB INSTRUCTION CHECKLISTS 12-1

12.1. Introduction 12-1

LIST OF EXAMPLES

Example		Page
6.1	ORR pressurizable off-gas filter pit Building 3109 test data	6-56
6.2	Operating instructions	6-63
6.3	Mechanical design change memo	6-65
6.4	Reactor instrumentation and controls design change memo	6-66
6.5	Neutron radiography, detailed procedural checklist	6-122
7.1	Cell-ventilation system quarterly functional checks	7-32
7.2	Load test for No. 1 or No. 2 dc battery bank	7-60
7.3	Load test for No. 3 dc battery bank	7-61
7.4	Battery load test	7-62
7.5	Recharging of No. 1, 2, or 3 dc batteries	7-64
7.6	Battery charging test	7-65
7.7	Procedure for testing the emergency water-pumping components	7-66
8.1	ORR hourly readings	8-2
8.2	ORR power changes and accumulated megawatt hours	8-6
8.3	12-8 shift daily checksheet - ORR (inside checks)	8-8
8.4	12-8 shift daily checksheet - ORR (outside checks)	8-16
8.5	8-4 shift daily checksheet - ORR (inside checks)	8-22
8.6	8-4 shift daily checksheet - ORR (outside checks)	8-28
8.7	4-12 shift daily checksheet - ORR (inside checks)	8-34
8.8	4-12 shift daily checksheet - ORR (outside checks)	8-37

		Page
8.9	ORR daily water system checks	8-41
8.10	ORR secondary water system	8-42
8.11	Demineralized make-up water to ORR	8-44
8.12	Daily routine instrument checklist	8-45
8.13	Graph of shim rod position versus time	8-46
8.14	ORR daily summary	8-48
8.15	ORR startup checklist	8-50
8.16	Background survey	8-58
8.17	ORR shutdown checklist	8-60
8.18	Beam-hole-status	8-62
8.19	Beam hole liner N_2 purge system	8-63
8.20	ORR replacement loading	8-64
8.21	ORR weekly checks	8-66
8.22	Weekly supply inventory	8-67
8.23	ORR-BSR complex electrical usage	8-68
8.24	Facility radiation and contamination system checksheet (weekly)	8-69
8.25	ORR embedded aluminum vacuum line readings	8-70
8.26	Data sheet for water makeup to pool reservoir tank	8-71
8.27	ORR weekly report	8-74
8.28	Hoisting equipment checklist	8-79
11.1	Plant and Equipment work request	11-13
12.1	Information and job instruction checklist for the Oak Ridge Research Reactor	12-2
12.2	Operation checklist for Building 3004	12-31
12.3	Instruction checklist for LITR standby and Building 3001	12-35

LIST OF FIGURES

Figures		Page
6.1	Large facility leak detector system.	6-4
6.2	Spray nozzle piping for ^{16}N dispersion around reactor tank	6-6
6.3	^{16}N dispersion for Poolside Facility	6-7
6.4	Normal off-gas system	6-26
6.5	ORR normal off-gas system in line water removal . .	6-32
6.6	Pressurizable off-gas system	6-47
6.7	Pressurizable off-gas filter pit gauge panel	6-55
6.8	Underwater periscope	6-105
6.9	Objectives	6-106
6.10	Tools	6-107
6.11	Neutron radiography facility in the ORR	6-113
6.12	Top of camera and seal plate containing a small opening for insertion of the specimen (shown in position)	6-115
6.13	Top of camera with adapter for ice seal	6-117
6.14	Helium pressurization system for camera	6-119
6.15	Air flow sheet for collimator	6-120
6.16	Liquid nitrogen circuit	6-127
7.1	Simplified power diagram - ORR	7-3
7.2	Cell ventilation flow diagram	7-13
7.3	Thermocouple location cell ventilation filter pit	7-15
7.4	Iodine injection system	7-31
7.5	Ventilation system at ORR hot cells	7-41

		Page
7.6	Hot cell ventilation instrument panel	7-43
7.7	Monitoring system for dc units 1, 2, and 3	7-53
7.8	Emergency cooling flow	7-73
7.9	Heat-exchanger pit area	7-107
9.1	Central panel of the ORR facility radiation and contamination alarm system	9-7
11.1	Line of maintenance responsibility	11-2

LIST OF TABLES

Table		Page
6.1	Roof fan capacities	6-10
6.2	NOG orifice (FE-903) calibration	6-36
6.3	Filter differential pressures	6-44
6.4	Doors to rooms or buildings	6-72
6.5	Valves on the ORR reactor primary water system locked and/or tagged	6-75
6.6	Valves on the ORR reactor secondary water system locked and/or tagged	6-81
6.7	Valves on the ORR pool primary water system locked and/or tagged	6-82
6.8	Valves on the ORR containment system locked and/or tagged	6-88
6.9	Electrical equipment at the ORR complex locked and/or tagged	6-91
6.10	Valves on the ORR air supply lines locked and/or tagged	6-92
6.11	Valves on ORR experimenters' equipment locked and/or tagged	6-97
9.1	Radiation and contamination monitors installed in Building 3042	9-3
9.2	Central control panel alarm indications	9-5
11.1	List of maintenance records - ORR	11-16

6. SPECIAL PROCEDURES

6.1. Pertaining to the Reactor

Reference Drawing - D-24664

6.1.1. Checking Chambers with a Source

Startup of a reactor should not be initiated until its neutron detection instruments have been checked for operability by exposure to a neutron source, and a source of background neutrons has been established against which comparison measurements can be made as neutron production increases.

The ORR has two such sources of background neutrons, each dependent on the gamma-neutron reaction for production. One is from the fission products and the other gamma-emitting radioisotopes present in the fuel, shim rods, experiments, and reactor components as these emitted gamma radiations react with the beryllium reflector in the reactor to produce neutrons. The level of neutron output is dependent upon the age of the fuel, the amount of beryllium present, and the length of time the reactor has been shut down, permitting the gamma-emitting radioisotopes to decay. The second source of neutrons uses the same sources of gamma radiations but depends upon their reaction with the deuterium present in the natural water coolant and moderator for the production of neutrons. The quantity of neutrons produced is dependent upon the age of the fuel, the length of time the reactor has been shut down (permitting the gamma-emitting radioisotopes to decay), and the amount of water around the sources of gamma radiations.

The supply of background neutrons is sufficient to be detected by both the fission chamber, the ORR's most sensitive detector, and the micromicroammeter chamber. The supply of background neutrons is <u>not</u>

sufficient to be detected by the log-N chambers, used for operation of the reactor at intermediate power levels. Before placing a neutron detection chamber (either new or repaired) in the control system, it must be checked for response to neutrons. The checking is done either by exposure of the chamber to a known intensity of neutrons from a specially prepared source or by exposure in an operating reactor where its performance can be checked against that of a properly operating chamber. In the latter case, the chamber under test must not be connected to the control or safety system.

6.1.2. Precautions to Be Used in the ORR Pool

It is important that operators realize the hazards associated with damaging the aluminum liner of the pool. Water leaking through holes in the liner would flow around the inlet and exit reactor water lines, the reactor bottom plug liner, and the other lines which pass through the concrete to the pool. Experience with concrete-aluminum corrosion indicates that the presence of water between the pipes and the concrete might cause the lines to corrode enough to produce leaks in the lines. If this should happen with a line carrying as much as 40 psi pressure, the water would be pumped between the concrete and the pool liner possibly causing it to balloon out into the pool. The core drilling which has been done through the concrete to provide drainage for the water in such an event might preclude such damage, but it is obvious that every precaution must be taken against such an occurrence.

Grating and plates have been installed at the bottom of the center pool floor. The main purpose of the grating is to protect the aluminum lining from puncture by any item which might be dropped into the pool. Every precaution must be taken to ensure that heavy tools or other objects which might cut through the lining are not dropped into the pool.

Before heavy shields are suspended over the pool, precautions must be taken to make certain that they cannot drop or swing in such a manner as to damage the pool liner. In general, use of the pools other than for normal storage should be kept at a minimum. Only fuel and such experiment equipment as is absolutely necessary should be put into them.

6.1.3. Large-Facility Leak-Detector System

The term "large facility" refers to the large north and south experiment facilities. As a part of each facility, between the large-diameter liner embedded in the concrete shield and the 18-in. by 24-in. obround section which enters the reactor tank, there is a transition section known as the "dished head" of the facility. This transition piece is welded to the obround section in the tank and is bolted to the large-diameter spool piece that extends through the pool wall. All these components are made of aluminum. In order to ensure a seal against water leakage at this bolted connection, there is an aluminum "O" ring between the flange on the dished head and that on the insert where the fasteners are located. Since the installation of the "O" ring leaves a space between the two sections, an aluminum-plate hoop 3/32-in. thick has been welded as a bridge between the liner and the dished head. This gives the facility the appearance, when viewed internally, of being smooth and free of mechanical joints.

Referring to Fig. 6.1, it can be seen that there are spaces between the welded plate and the "O" ring and between the "O" ring and the apex of the "V" groove into which the ring seats. Since water leaking into these spaces would remain stagnant, there would be a definite possibility of corrosion. To minimize the possibility of leaks and to detect them before they become serious, the flow system shown in Fig. 6.2 had been installed. This system forces an air stream through the spaces mentioned above and exhausts the air and any entrapped water into the atmosphere. The lines and valves are located on the north side of the reactor balcony at the east end. Glass tubes containing an anhydrous compound (Drierite)

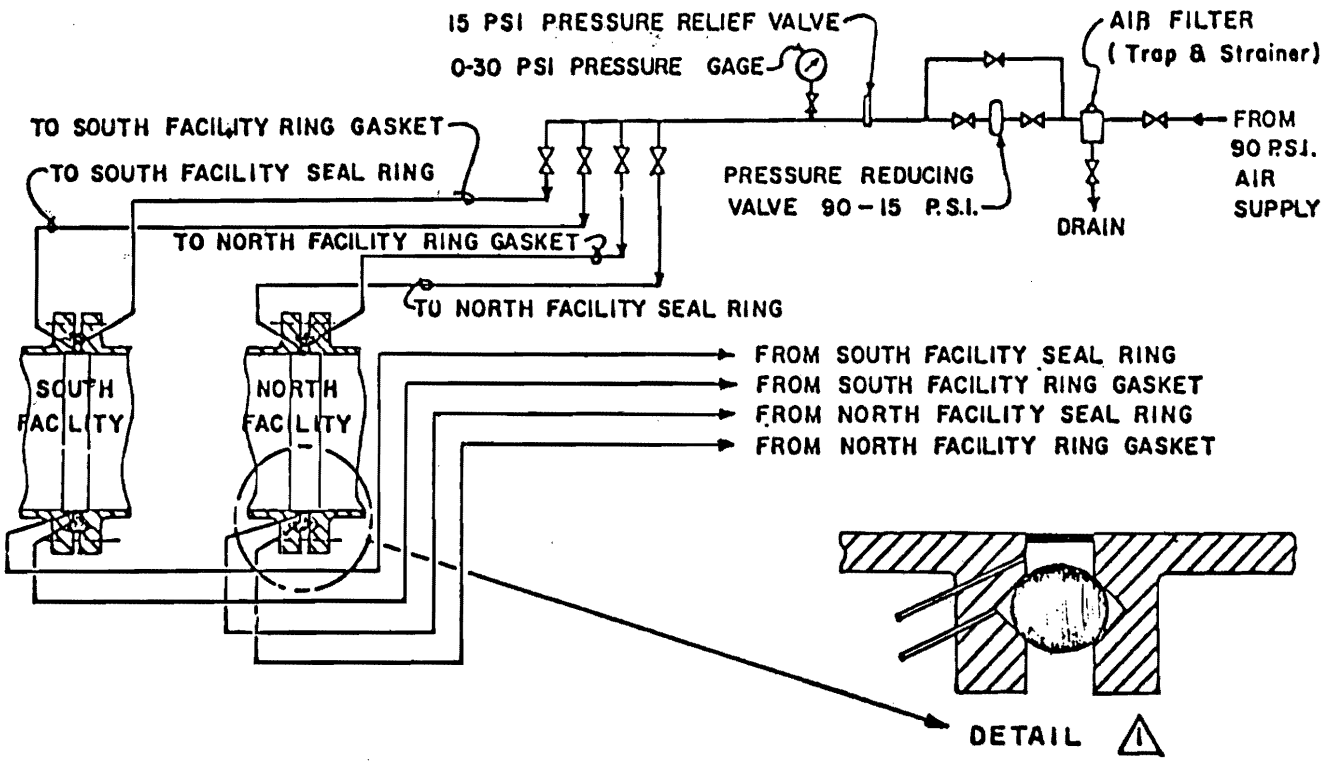

Fig. 6.1. Large facility leak detector system.

have been attached to the ends of the exhaust lines. This material changes color (from blue to red) when exposed to moisture. Therefore, a change in color will indicate the presence of water or moist air in the spaces of the flanged joint. A daily check is made of this system, and, if a change takes place, further tests will be performed to evaluate the situation.

6.1.4. Dispersion of ^{16}N Around the Reactor

During the design of the ORR, there was considerable concern about the formation of the radioisotope ^{16}N in the reactor pool adjacent to the reactor. Radiation readings of approximately 20 R have been obtained from ^{16}N-bearing water on the exit water line from the reactor core. ^{16}N has a half-life of approximately 7 s, but it was feared that the natural convection around the reactor would move the radioactive gas to the pool surface before it could decay sufficiently to be harmless. Sufficient delay was accomplished by a system of jet nozzles which direct approximately 140 gpm of pool return cooling water downward along the outside of the reactor tank wall as shown in Fig. 6.2.

Another source of relatively high ^{16}N activity is at the reactor pool side. The delay here was accomplished by installing a jet eductor, Fig. 6.3, and using 140 gpm of the pool return cooling water to provide a suction at the pool side causing a "downflow." The ^{16}N-bearing water is pulled down by the suction and dispersed into the reactor pool. With both systems in operation, the radiation level is only about 8 mr/h at the pool surface.

6.2. Building 3042

6.2.1. Operation of the Pneumatic Doors

Reference drawing

E-20393-ED-019

The large, pneumatically operated doors at the east and west sides of Building 3042 are, in addition to being access doors, an integral part of the containment system of the building. In the event of a release of

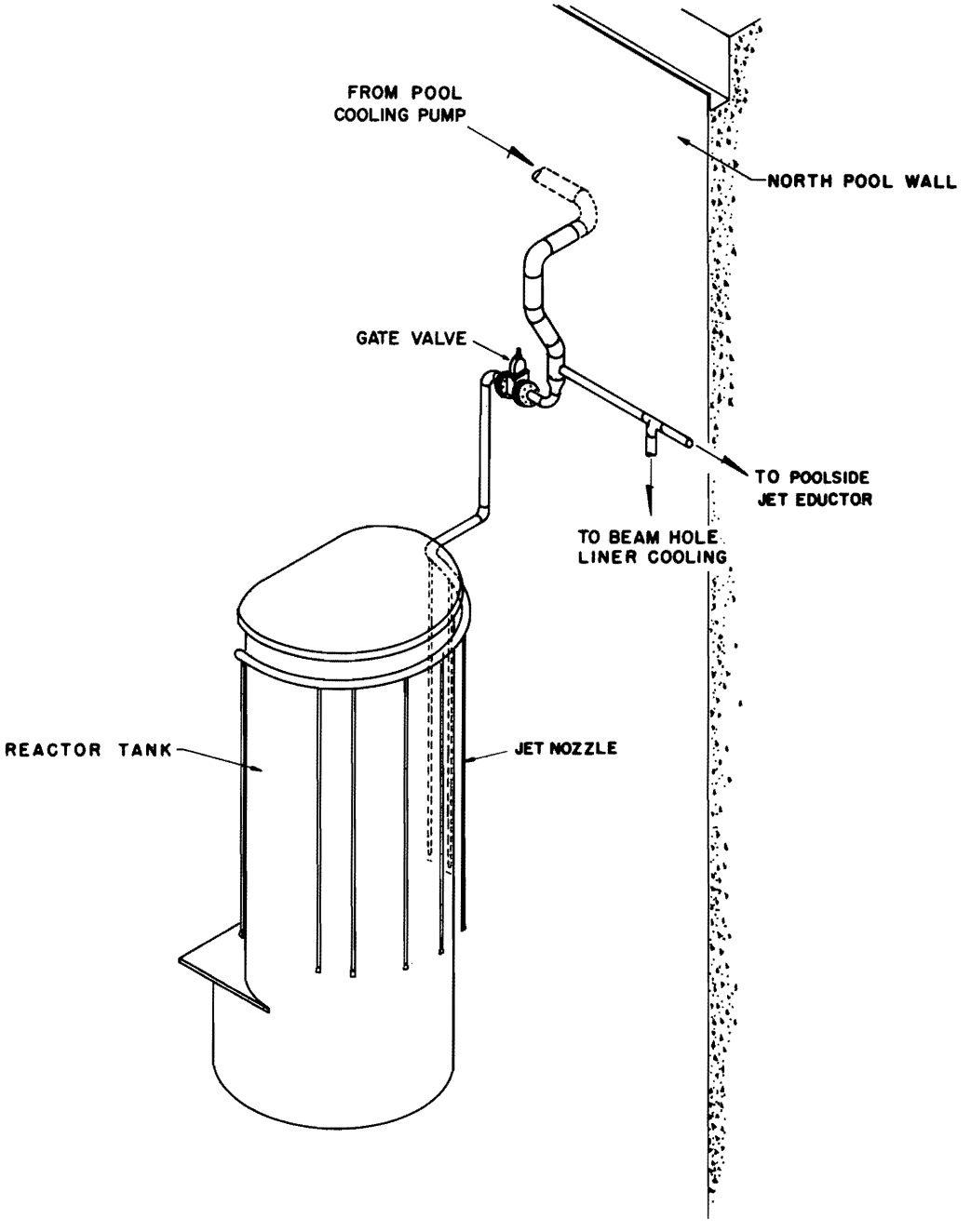

Fig. 6.2. Spray nozzle piping for ^{16}N dispersion around reactor tank.

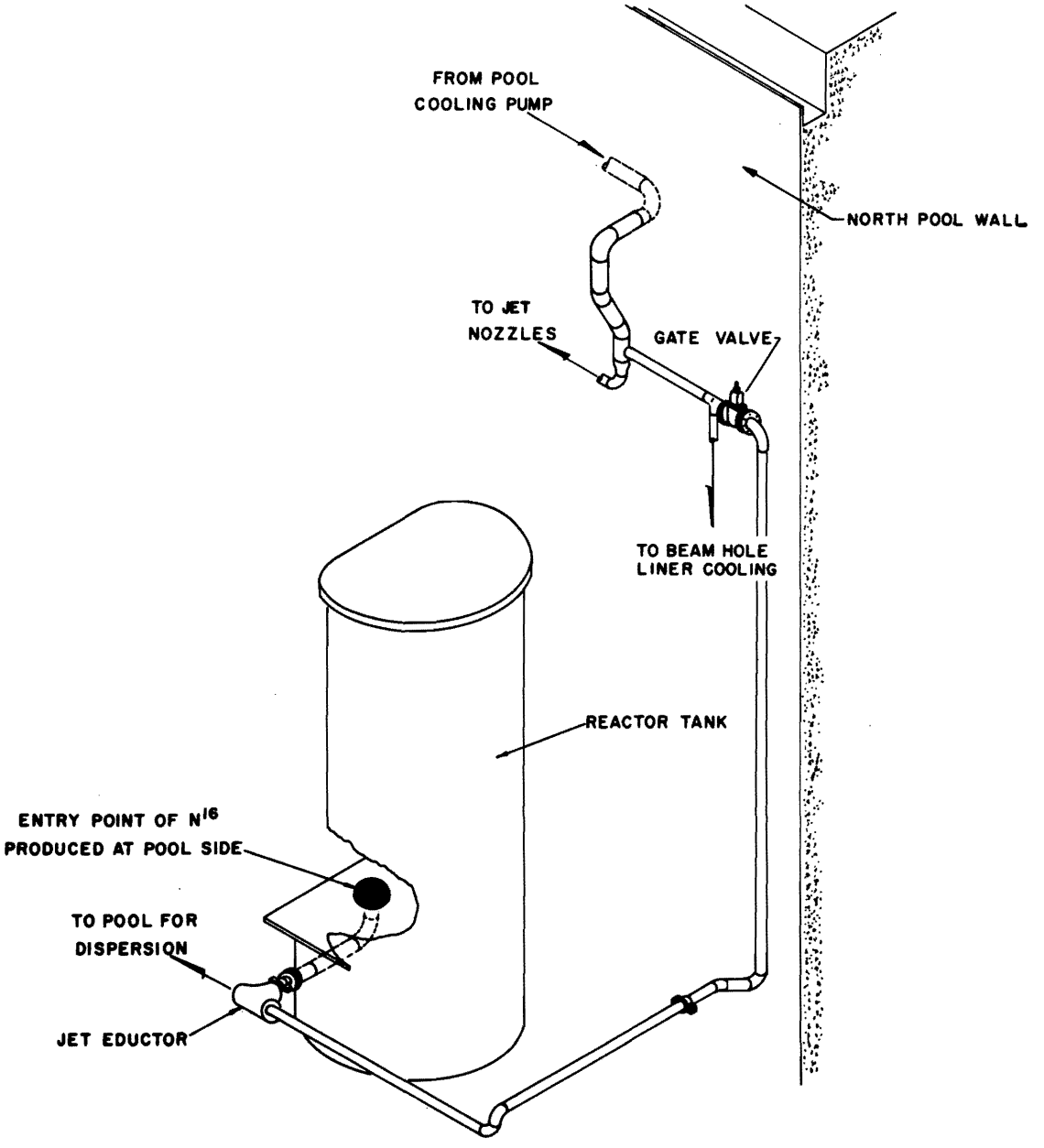

Fig. 6.3. ^{16}N dispersion for Poolside Facility.

radioactive contamination into the ORR which requires that the building be put in containment, these doors automatically close. The following operating procedures should be used.

1. Procedure for opening the doors

   a. Unlock the control box for the door which is to be opened.

   b. Hold the personnel door next to the large doors open for 15 to 30 s to relieve the negative pressure induced in the building by the exhaust system.

   c. Check to see that there are no obstructions which would be struck by the doors while they are opening.

   d. Press the "open" button (press and release).

   e. Remain stationed at the door while it is open to ensure that it is not used as a personnel door and that it is not blocked.

   f. Close the door as soon as possible. There are very few instances when the door should be open for longer than a few seconds. Even when a vehicle is to be unloaded immediately, the operation of unloading is usually of sufficient duration to warrant closing the door and reopening it to allow the vehicle to exit after unloading.

   g. Relock the controls. This is to ensure that the operation of the doors will be done by Operations Division personnel only.

   h. At no time will obstructions be left in the path of the doors; for example, prior to allowing a vehicle to enter the truck bay, it shall have been established that the doors can be closed when the vehicle is in the truck bay. For longer vehicles, the load must be transferred to a shorter vehicle before being brought into the building or delivery must wait until the reactor is shut down.

2. Procedure for closing the doors

   a. Check to see that the door is unobstructed. This includes being certain that there is no large accumulation of rocks and/or dirt near the door's framework.

   b. Press the "close" button.

   c. Relock the controls.

During the opening and closing of the doors, be attentive to any unusual noises or operating behavior of the doors. If there are any, report them to the ORR shift supervisor.

6.2.2. The ORR Heating, Air-Conditioning, Ventilating, and Containment Systems

NOTE: The cell-ventilation and containment part of this section is explanatory only and is discussed here since it is related to the heating and air-conditioning system. Refer to Section 7, "Building Cell Ventilation System," in the ORR Operating Manual for the reference drawings and procedures associated with this part of the system.

1. Description and function

   The ORR building air-handling and conditioning system, as designed, considered the basement as a separate, self-contained volume with its own heated fresh-air supply and exhaust systems of equal capacity. The remainder of the building's systems were designed to provide approximately 13,810 cfm of fresh air, 14,000 cfm of exhaust air, and 20,600 cfm of recirculated air for a total handling capacity of approximately 48,410 cfm. Air exhaust was handled by the operation of two roof fans (Nos. 1 and 6) with a total capacity of 14,000 cfm. In Table 6.1, these design flows are compared with those resulting from present operation under modified conditions.

Table 6.1. Roof fan capacities

	As designed	Using emergency system[a]	Using emergency system and additional roof fan[a,b]
Fresh air	13,810	20,210	27,000
Exhaust	14,000	20,400	27,000
Recirculated	20,600	14,230	0

[a]Calculated on basis of design air-handling capabilities of individual units.

[b]Flows considered to be only rough approximation.

The ORR building (Building 3042) has four working levels as follows: a full basement with 11,400 sq ft, a first floor with 9,500 sq ft, a second floor with 3,000 sq ft, and a third floor with 6,880 sq ft. The difference in usable square feet per floor area from that contained by the building dimensions is taken up by the reactor pool, hot cells, and high-bay area of empty space which extends from the building ceiling to the first floor, permitting unimpeded use of the bridge crane to service experiment areas located at the beam holes at the east end of the reactor pool. As a fire control measure, the basement can be isolated from the floors above by a hatch cover in its ceiling, by fire walls around the stairwells, and by fire-resistant access doors to the area. Air is removed from the building through six exhaust fans installed in the building roof, only two of which are in normal use, and by the "emergency" ventilation system which is in constant operation.

2. Containment, ventilation, and air conditioning

The ORR containment, ventilation, and air-conditioning systems have been designed to minimize the dissemination of contamination and radioactive gases into the area surrounding the reactor building in the event of an accidental release of radioactive materials. There are three separate systems which are used for the decontamination and disposal of potentially radioactive gases. The cell-ventilation system provides dynamic containment for the building and provides a method for the decontamination and subsequent controlled release of large quantities of potentially radioactive gases. Two separate off-gas systems are used to handle routine low-volume disposal of gaseous wastes from experiment facilities and reactor system components. The two systems are the pressurizable off-gas (POG) system and the normal off-gas (NOG) system. Although the off-gas systems are not specifically a part of the building containment system, they are somewhat related and are described in this section to aid in the overall understanding of the air-handling systems. The control room, offices, and other normally clean areas are served by an air-conditioning system which is separate from the building's ventilation system.

Additional ventilation of the reactor bay and experiment areas is provided by two roof fans (Nos. 1 and 6), each of which exhausts building air at the rate of 7000 cfm. These automatically controlled fans also aid in maintaining the negative pressure in the building during normal conditions.

Ventilation of the basement area is provided by a centrifugal blower, which exhausts basement air through a louvered opening located in the northeast corner of the basement.

The cell-ventilation system provides a flow of air through areas of the main ORR building in which potential sources of radioactive gases exist. These areas include the reactor-bay area, the basement area, the Loop 2 decontamination cell and equipment room, the pipe

chase, the hot cells over the reactor pool, the B-9 experiment cubicle in the basement, and other areas. The air from these areas is drawn through ducts into a filtering system and discharged into the atmosphere from the 250-ft-high 3039 stack.

The off-gas systems are designed to handle routine high-concentration radioactive gaseous releases and are connected directly to the components which are capable of releasing these effluents. The pressurizable off-gas system is connected to components which may become pressurized, whereas the normal off-gas system collects gaseous wastes only from components which are not subject to becoming pressurized.

3. General ventilation and air-conditioning systems

Reference drawings

Heating and ventilation: D-22305-R1 through D-22338, D-22376, D-28185, D-28188, D-28189, D-29156 through D-29158, and D-37570.

Air conditioning: D-22147, D-22161, D-22162, D-22243, D-22303-R1, D-22378, D-27130, D-29030, D-29138 through D-29149, D-29506 through D-29513, D-32843 through D-32849, D-35705, D-35706, and D-36115.

Ventilation and air conditioning of the ORR building are accomplished with several package-type air conditioners positioned in appropriate locations in the building. Chilled water is supplied to the various air-conditioning units by a single large unit which has a capacity of 2.15×10^6 Btu/h (180 tons). Heat collected at the chiller is dissipated by a small cooling tower, which is used for that system only. Low-pressure steam (25 psi) for the air-conditioning units is obtained by a pressure reduction of the 125-psi plant steam supply.

The basement is heated by a 12,000 cfm forced-draft unit equipped with steam-fed heating coils. This unit, located near the basement ceiling on the south wall, has pneumatically operated inlet and exit dampers. Fresh air for the unit enters through a metal stack located outside on the south side of the building. Air from the basement is exhausted through a vertical shaft located in the northeast corner approximately 10 ft above the basement floor.

The subpile room, located at the east end of the basement under the reactor pool, is ventilated and air conditioned by a window-type unit mounted in the east wall of that room. Air from the subpile room is exchanged with that in the basement.

The heating and ventilation system of the laboratory and the counting room located in the northwest corner of the basement consists of individual air-conditioning facilities in the two rooms. The units supplying these rooms can supply climatized air. The unit servicing the counting room is backed up by a booster fan, served by a duct from the fresh-air intake to the No. 2 heating and ventilation unit, to maintain this room at a positive pressure with respect to the rest of the building. The laboratory air is exhausted both by hood fans, serving two laboratory hoods via an exhaust duct which passes directly through the building room to the atmosphere and by natural air movement to the building basement through a hole in the laboratory ceiling. The laboratory hood-exhaust fans, which are vented to the atmosphere, are controlled by switches located on the lower sections of the hoods and must be reactivated after a building ventilation shutdown.

The heating, cooling, and ventilation of the rooms and open area of the first floor are accomplished by the Nos. 1 and 2 air-conditioning and ventilating units located on this floor. Each of these has a capacity of 15,600 cfm. The No. 1 unit is located near the south wall of the building, and the No. 2 unit is located near the north wall of the building. These units are supplied with chilled water and steam to the cooling and heating coils, respectively. They are thermostatically controlled with automatically controlled inlet and recirculating air dampers. Their fresh-air inlets are located above and adjacent to the south and north personnel doors. Each unit has ducting, equipped with diffusers, which runs east and west from the unit on its respective side of the building. Each unit is equipped with filters for dust removal.

The heating, cooling, and ventilation of the second-floor open area and the open area of the rest of the building not served by the first-floor units are accomplished by air-conditioning and ventilation unit No. 3. This unit has a design specification capacity of 61,200 cfm. As with units Nos. 1 and 2, chilled water and steam are supplied to its coils. It has pneumatically operated inlet dampers, and the fresh-air intake is by way of three metal stacks located outside the building at the southeast corner. The intake air is filtered for dust removal.

The laboratories and offices of the second level, north and south, contain individual heating and cooling units equipped with coils supplied by chilled water and steam. These units are thermostatically controlled and have dampers controlling the amount of recirculated air from the room and fresh makeup air from the open area of the building outside the room. An exception to this type of cooling is Room 212, which is equipped only with an exhaust fan exhausting to the open area of the second floor.

The second floor change room, which is outside the building containment system, is heated by a forced-draft unit. This unit has thermostatically controlled dampers. It uses either recirculated air from the room or fresh air obtained from the outside through an intake on the west wall of the building at the unit. Air is removed from the room to the outside of the building by two manually controlled exhaust fans in the east wall.

The second floor rest rooms are vented through a duct, with air-intake registers of 400 cfm each, to an 800-cfm fan which exhausts through a self-closing louvered opening in the east wall of the change room.

The control room and offices of the north side of the third level are heated, cooled, and ventilated by an air-conditioning unit located in the northeast corner of the third floor. This unit has a design specification capacity of 4460 cfm, is equipped with its own refrigeration system as well as heating system, is thermostatically controlled, and has pneumatically controlled automatic inlet and return-air dampers. Its fresh-air intake is located in the north wall of the building at the unit.

The south section of the third floor consists of laboratories equipped with individual heating and cooling units. Each unit, equipped with coils supplied with chilled water and steam, is thermostatically controlled and has automatically operated dampers for either recirculation of room air or makeup with fresh air from the open area of the third level, similar to those on the second level. The laboratories have individual roof vents, the openings of which are pneumatically operated and controlled.

The third floor change room, which is outside the building containment system, is heated and ventilated by a thermostatically controlled system which is similar to that of the second floor change room.

Air from the first, second, and third floors and the open area, which extends to the building roof, is exhausted by two of six roof exhaust fans in addition to the building ventilation system previously described. Two of these fans, Nos. 1 and 6, have capacities of 7000 cfm each and are normally operated in an automatic mode. The remaining four exhaust fans have capacities of 16,000 cfm each and are manually operated. At present, only exhaust fan No. 3 is occasionally called upon to assist fans 1 and 6 in maintaining the required building negative pressure while the normal building air intakes are open. Fans 1 and 6 are currently operated in the automatic mode in conjunction with the building ventilation system. All of these fans are equipped with pneumatically operated, automatically controlled dampers.

4. <u>Setting of dampers for air-conditioning and ventilation units Nos. 1 and 2</u>

Occasionally, it may be necessary to check and adjust dampers on air-conditioning and ventilating units 1 and 2 during hot weather to regulate the makeup air. The adjustment procedure is:

a. Measure the temperature, T_1, of the return air at the grill of each unit using a <u>non-mercury</u> thermometer

b. Measure the outside temperature, T_2

c. Determine the "adjusting factor," T_3, using the following relationship

$$T_3 = (T_2 - T_1) \times 0.2828$$

d. Adjust the damper unit until the temperature of the mixed air (before it crosses the cooling coils) is the sum of $T_1 + T_3$.

5. Cell-ventilation system

The cell-ventilation system is a maximum-reliability system which provides for the removal, decontamination, and disposal of possibly contaminated air from the reactor building. It consists of a network of five ducts located throughout the building, a series of filters which remove particles and radioiodine from the air, blowers which provide the draft for the system, and the 250-ft-high 3039 stack. This system removes air from the building at a rate of 9000 cfm.

The five main ducts and the areas they service are listed below.

a. The main building duct removes air from:
   (1) around the pool area between the second and third floors,
   (2) the overhead reactor-bay area, and
   (3) the basement area over the B-9 cubicle.

b. A basement duct removes air from the Loop 2 decontamination cell and equipment room which is located on the first floor, and laboratory hoods located in the west end of the basement.

c. A basement duct removes air from:
   (1) the NOG seal tank in the subpile room,
   (2) the HB-5 vacuum pump,
   (3) the pressurized-water loop (PWL) battery room,
   (4) the PWL valve box,
   (5) the pipe chase,
   (6) the PWL equipment room, and
   (7) the pipe-tunnel sump and sampling stations.

d. The hot cell duct removes air from the hot cells over the reactor pool.

e. A duct in B-9 cubicle removes air from the B-9 cubicle in the basement.

Each duct has a manual damper, which is adjusted to provide suitable air flow and pressures and is then locked at the required setting. All five ducts join one 24-in. duct before entering the filter pit. The filter pit, located south of the reactor building, is an underground, water-proofed, concrete structure designed to withstand pressures in the range -57 in. H_2O to +5 psig. The top shield of the filter pit is 1 1/2-ft thick, and removable concrete plugs allow access to the filters.

The filter pit contains five separate banks of filters. They are, in order, a 3 x 3 array of 2-ft-square prefilters, a 3 x 3 array of 2-ft-square absolute filters, two 3 x 3 arrays of 2-ft-square, 1-in.-thick activated charcoal filters, and another 3 x 3 array of 2-ft-square absolute filters. The filter frames are of corrosion-protected carbon steel.

The filter pit is designed for a filter-removal method in which the filters are withdrawn into lead shielding casks. After removal of the concrete access plugs, the cask is placed over the opening. Wedging devices which seal the filters to the filter frames are removed remotely, and the filters are removed into the casks.

6. Containment

The ORR employs dynamic containment to prevent the escape of untreated radioactive gases to the atmosphere. The ORR building is not sealed air-tight to retain radioactive gases that might be released. Instead, it is maintained as a partially leak-tight structure. The cell-ventilation system maintains the containment by the controlled exhaust of air from the building at a rate sufficient to ensure that there is always an inflow of air at leakage points. The cell-ventilation system is not a start-on-demand system but operates continuously so that the building is always under a slight vacuum.

When the building ventilation is placed in the emergency containment mode, all air entering the building enters by leakage paths. Heating and ventilating units, exhaust fans, and air-cooling equipment are shut down, and their related louvers are automatically closed. At the same time, the roof fans and the basement exhaust fans are shut off, and their louvers are closed so that all air leaves the building through the ducts of the cell-ventilation system. The air exhausted from the building is decontaminated by a filtration and iodine absorption system and discharged into the atmosphere at a height sufficient to ensure adequate dispersion.

The building ventilation can be placed in the containment mode either manually or automatically through the use of three separate sets of controls. Within the first set of controls, designated as containment controls, manual actuation is initiated by a push button located in the control room. Automatic containment will occur when a high radiation level exists either in the building or in the cell-ventilation duct, as detected by the containment radiation monitors. A detector located just outside the control room initiates containment if a level of 75 mr/h exists. A detector on the cell-ventilation duct at the filter pit also initiates containment if a level of 7.5 mr/h is detected. The two radiation detectors transmit signals to two gamma monitors located in the control room, and containment is initiated when setpoints on the monitors are exceeded. The monitors are also fail-safe units, in that containment is also initiated when the instrument fails.

Building containment can also be effected by the Facility Radiation and Contamination Alarm System. This system will automatically actuate the building evacuation system if two monitrons or two continuous air monitors in the coincidence circuit alarm simultaneously at the high-level trip (23 mr/h and 4000 counts/min, respectively). Also, containment can be actuated by any one of three "manual" evacuation buttons (two in the control room and one outside a west personnel door). Refer to Section 9.1 for a description of the Facility Radiation and Contamination Alarm System.

The third method of automatically establishing building containment is provided by the fire-alarm system. If a fire alarm occurs in the building, containment is initiated by a relay in the building's master fire-alarm box.

To ensure that the personnel in the ORR control room and offices on the third level, north, have an independent air supply when the building is in containment, the air-conditioning unit serving these rooms does not exchange air from the building high bay area with air from the office and control room area. Instead, the unit exchanges air with fresh air from outside the building. The rooms are maintained at a pressure greater than that existing in the high-bay area. Refer to Section 7.2.3 for a description of this system.

Pressure conditions within the building are continuously indicated by four manometers located in various parts of the building and by flow indicators (two ΔP cells) which monitor the exhaust flow from the filter pit. A reduction of the duct flow below 5000 cfm results in a reactor power reduction to 300 kW (N_L).

The ORR building is designed to withstand a negative pressure of 1 in. of H_2O; however, the desired maximum negative pressure that the building should be put under is approximately 0.5 in. of H_2O. Two counter-weighted louvers are located in the high-bay area east building wall to provide relief (inflow of air from outside the building) from excessive building negative pressure. The building could be put under excessive negative pressure by a condition such as the following simultaneous events: the building in containment with both the electric and steam power blowers operating, starting the basement exhaust fan, and starting the roof fans. (The Nos. 1 and 6 roof fans are normally in the automatic mode and won't start unless the respective heating and ventilation units Nos. 1, 2, and 3 are started. Roof fans Nos. 2, 3, 4, and 5 are normally locked and tagged in the OFF position and should not be

turned on unless authorized by the Reactor Supervisor or his alternate.) It is important that all operating personnel be aware of the preceding responsibilities and direct their activities accordingly to prevent putting the building under excessive negative pressure which could result in building damage.

7. Returning the building to normal ventilation following containment

Reference drawings

D-32920 and RC2-1-5Y-R2

When normal operation can be resumed following a building containment condition, all heating, cooling, exhaust, and ventilation systems must be manually restarted to regain operation of the blowers and the louvers. The Trane Centravac Refrigeration System will not be affected by the operation of the containment system; however, following a normal power failure or manual shutdown, it is necessary to manually restart the system. Manual restart is accomplished by operating the "start" buttons in the four push-button stations located in the emergency diesel generator room near the panel marked Time Delay Control Panel and pushing the reset button on the Centravac panel. Following the restart of the Trane Centravac System, the Nos. 1, 2, and 3 air-conditioning and ventilating units, the chilled water pump, and the Nos. 1 and 6 exhaust fans will all start automatically and in a sequence which depends upon temperature and time-delay relays.

To return the building to the normal ventilation conditions, the following steps will be taken to start the operation of the individual units:

a. Push PB14 in the control room (northwest corner) which will clear the building containment condition, thereby allowing the ventilation units to be reset.

b. Basement

(1) Air-conditioning and ventilation unit No. 3 (K-8). The unit is located in the southeast corner of the basement. Push the start button on the power switch (K-8) which is located on the north wall of the unit room.

(2) Heating unit No. 3 (HU-3). The unit is located in the south area near the ceiling level. Push the start button on the power switch (HU-3) which is located under the unit on the south wall. An alternate switch is located on the first floor among the electrical controls west of the south personnel door and is also labeled "HU-3."

(3) Exhaust fan (RE-4). The unit is located in the northeast area approximately 10 ft above the basement floor. Push the start button on the power switch (RE-4) which is located on the south wall under heating unit No. 3. An alternate switch is located on the first floor among the electrical controls west of the south personnel door and is also labeled "RE-4."

(4) Battery room vent blower. The battery room is located over the Loops 1 and 2 control room. Push the start button on the power switch (on column F-5 inside the experiment control room). In addition, clear the telearm station (battery room vent blower) alarm condition on the instrument panel in the Loop 2 experiment control room.

(5) Counting room air-conditioning and ventilation unit. The unit is located in the counting room. The operation of the unit is not affected by the building containment condition; however, following an electrical power outage, the unit must be checked to verify that it is operating. Since the electrical power is controlled by an "on-off" switch, the air-conditioner motor should start when the electrical power is restored.

(6) Counting room air-conditioning booster fan. The booster fan supplies air via a duct tied into the outside air intake duct of the air-conditioning and ventilation unit No. 2 and extends downward to the counting room air-conditioning unit. Push the start button on the power switch located on the west wall of the counting room. NOTE: The air-conditioning and ventilation unit No. 2 (first floor north) must be restarted before the booster fan can be started.

(7) Laboratory air-conditioning and ventilation unit. The unit is located on the roof of the laboratory room. The operation of the unit is not affected by the building containment condition; however, following an electrical power outage, the unit must be restarted by pushing the start button on either of two power switches (one on the west wall or the one on the south wall of the laboratory room).

(8) Laboratory hood fans (2). Push the start button on the power switch on the north and south hoods. The switch is located on the lower section of the respective hood.

c. First floor

(1) Air-conditioning and ventilation unit No. 1. The unit is located near the south wall of the building. Push the start button on the power switch labeled "H&V No. 1" located near the south personnel door.

(2) Air-conditioning and ventilation unit No. 2. The unit is located near the north wall of the building (inside the I&C maintenance shop). Push the start button on the power switch labeled "H&V No. 2" located on the north wall near the north personnel door.

d. Second floor

(1) Ladies' and men's restroom vents. Push the start button on the power switch labeled "Emergency Shutdown Toilet Vent" located on the column just outside the entrance to the restrooms.

e. Third floor

(1) Laboratory roof vents. Push the start button on the power switch labeled "Emergency Shutdown Lab Vent" located on a building column opposite Room 302.

(2) Air-conditioner unit No. 1. The unit is located in the control-room annex. Push the start button on the power switch (labeled "A/C Unit") located on the east wall of the building near the unit. NOTE: The operation of the unit is not affected by a containment condition; therefore, the unit must be reset following a condition when the cell-ventilation flow drops to <5000 cfm and returns to >5000 cfm or following an electrical power outage.

In the event of a power failure, the above units will all have to be reset in addition to the Trane Centravac Refrigeration System and the change rooms' heating units on the second and third levels.

6.2.3. Normal Off-Gas System

Reference drawings

Flow diagram D-44862 and instrument flow diagram A-1594-7; also D-35721, D-33567, D-20760, D-22216, D-22222, D-22223, D-27134, D-22247, D-22319, D-22321, D-22326, D-22330, D-22331, D-22332, D-22333, D-22334, D-32055, D-44110, C-46903, H-11105-EG-001 through -EG-005, S-1106-EA-001, P-1105-EA-003, C-11105-EA-004, E-11105-ED-001, and E-10167-D-104.

1. General description

The normal off-gas system (hereafter referred to as the NOG) is one of three continuously operated gas-removal systems used in the ORR complex. The basic function of the NOG is to provide a controlled air sweep for the disposal of radioactive or potentially radioactive gases from the ORR water systems, various experiments, and related small experiment cubicles. The ORR NOG is, in turn, part of the ORNL plant-wide off-gas system which serves many buildings under the supervision of several divisions. The plant-wide system, operated by the Laboratory Facilities Section, is equipped with positive-displacement blowers and a caustic scrubber. Gases collected and processed by the system are discharged to the atmosphere through the 250-ft-high 3039 stack.

2. Operational requirements

The NOG system must be operating properly at any time that the ORR is either starting up or is in operation. This requirement is ensured by pressure-sensing instruments equipped with electrical interlocks in the reactor control circuits.

3. Operational responsibilities

Although reliable functioning of the NOG system is a prerequisite for ORR operation and for other systems in the ORR complex, some of its components are maintained by the Laboratory Facilities Section; therefore it is important that the areas of responsibility are defined.

The Laboratory Facilities Section is responsible for the periodic checks and maintenance of all components in the 3039 stack area. Any activities performed by this group which will affect the reliability of the system or cause a change in the operating pressure of the system must be scheduled with the ORR Operations Group, and such activities must be coordinated with the operating schedule of the ORR.

The ORR Operations Group (Reactor Operations Section) is responsible for those parts of the system directly related to the ORR, BSR, or LITR,* and is responsible for the periodic checks as outlined in this procedure.

4. Detailed functional description

a. Introduction

The NOG (Fig. 6.4) has been in service since the beginning of operation of the ORR. The system has undergone several modifications and now consists basically of piping imbedded in the concrete of the pool wall (and building floor) with numerous access ports, two water catch-tanks to prevent blockage by liquids, a filtering system containing two parallel banks of filters, and an 8-in. stainless steel header which connects the major portions of the system and extends to the vicinity of the 3039 stack where it joins the main header for the plant-wide system. Upstream of the filters, three branch lines are connected to the 8-in. header. These lines provide off-gas service to the LITR* and BSR, to waste tank WC-19, and to the decay tank and expansion pit in the ORR primary piping system.

Under normal conditions, the plant-wide off-gas system is kept at a negative pressure by an electric-motor-driven, positive-displacement blower. In the event of an electrical power failure or, if for any other reason, the pressure in the intake manifold increases to -30 in. H_2O, an auxiliary steam-turbine-powered blower will be energized automatically to provide continuation of the off-gas service.

---

*The NOG line to the LITR is normally not in use, i.e., no equipment is in use there, and the building header is valved out. This condition has existed since 1968 when the LITR was retired from service.

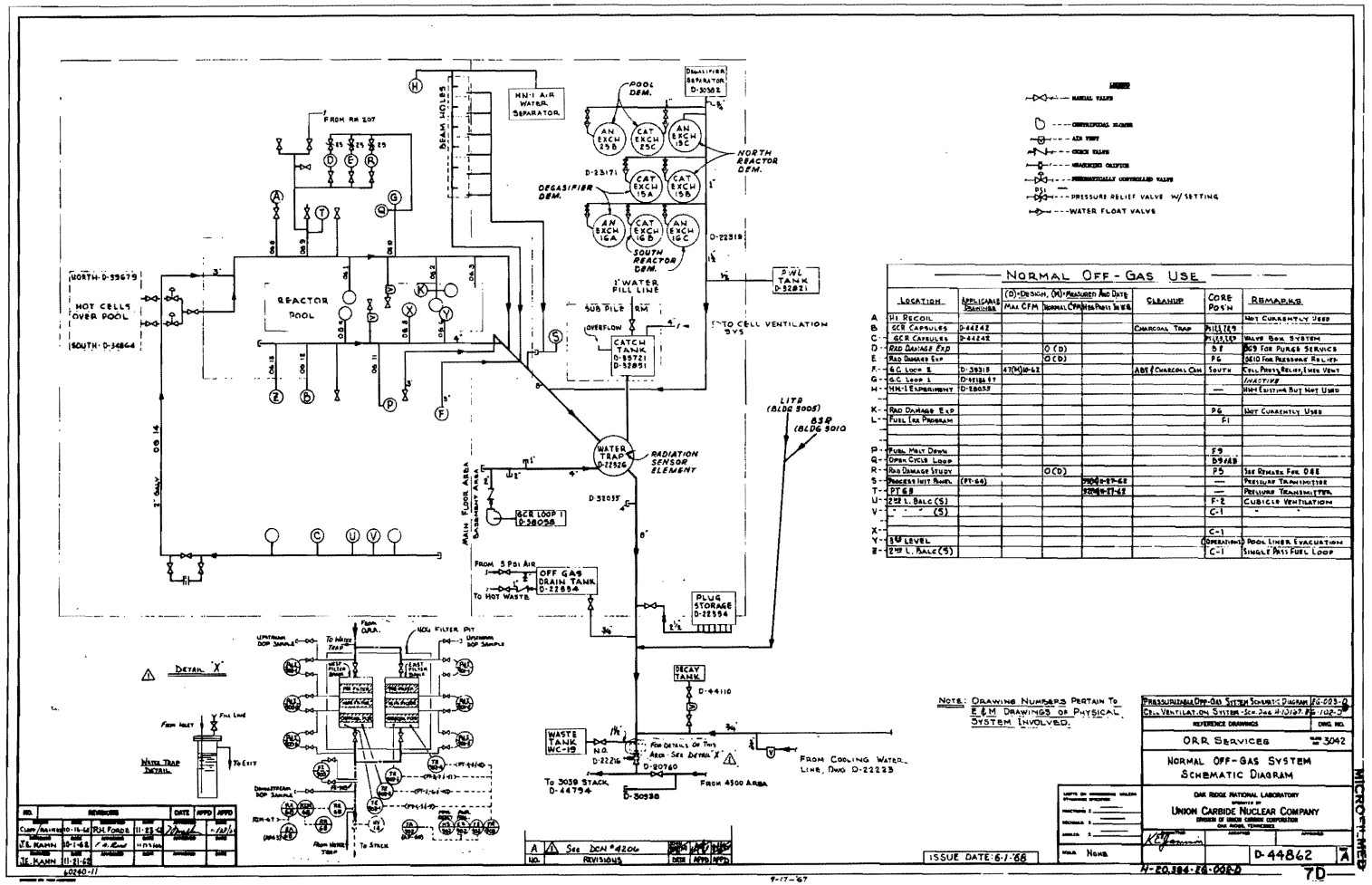

Fig. 6.4. Normal off-gas system.

b. Service connections

The NOG system at the ORR serves a variety of areas associated mainly with the reactor primary-water system and various experiment facilities (including air-sweeps for valve boxes). Since this system was designed to remove gases from enclosures where high flow rates are not required, it is characterized by a relatively low flow (500 cfm) and a high negative pressure (-40 in. H_2O). Off-gas service for cubicles requiring higher flow rates is provided by the cell-ventilation system, while high-pressure or potentially high-pressure experiments are connected to the pressurizable off-gas (POG) system. These systems are described elsewhere in this manual.

Since the branches of the NOG system are so numerous, no exact description of their location will be given. Instead, references will be made to prints which illustrate the piping in particular areas.

The main line for the NOG system (in the ORR building) is an 8-in. header extending from the third level to the basement area. The header is imbedded in the southeast corner of the structure of the storage-pool walls. The main branches of the system are the 4-in.-diam headers which surround the storage pools at the third-level elevation (Dwgs. D-22332 and D-22333). Access points to the system are listed below according to the areas which they serve.

(1) Pool area (Dwgs. D-22332 and D-22333)

Access points are OG-1, -2, -3, -4, -5, and -6, all of which are located in the reactor pool. Access point OG-3 has been fitted with a valve and a Chicago coupling to provide quick connection to the NOG system. Attached to OG-1 is a header with Chicago couplings located on the north side of the reactor, center, and west pools.

(2) Third level (Dwgs. D-22328 and D-22329)

Three 3-in. lines extend to the third level and are terminated by valves. The valves are located around the outside of the pool parapet. One is on the north side, one is on the south side, and one is at the east end of the reactor pool.

(3) Second-level balcony (Dwgs. D-22328 and D-22331)

Access lines protrude from the concrete wall at the ceiling. They are OG-8, -9, -10, -11, -12, -13, and -14. These access ports are used for gases discharged by experiments and also are connected to experiment valve boxes to provide a continuous air-sweep and negative pressure.

(4) Hot cells (Dwgs. D-22328 and D-34864)

The hot cells are provided with NOG services by a connection to a 4-in.-diam header. All valves are normally closed. The hot cells are normally kept under a negative pressure by the cell-ventilation system (refer to Section 7.2 for a detailed description). When the cell-ventilation system cannot maintain an adequate vacuum in the hot cells, a control valve will open automatically to allow the NOG system to maintain the correct negative pressure. This valve is located under, and just west of, the hot cells at the second-floor level. The NOG system is also used for venting special, smaller enclosures within the cells, when desirable.

(5) Reactor tank and exit water lines (Dwgs. D-22332 and D-22333 and sketch SP-737-1)

All gases that collect inside the reactor tank are removed by the NOG system. Lines from the reactor tank top route these gases to liquid-gas separators located in the reactor pool (one north unit and one south unit). These separators are also connected to the exit water lines.

Gases pass from the separators through ball-float traps into the NOG system. One ball-float trap is located on each exit water line. The ball-float traps can be seen at the third level near the top of the parapet.

(6) First floor (Dwgs. D-22330 and D-22331)

A 3-in.-diam header, which is imbedded in the pool wall, provides NOG services for the beam-hole facilities and the north and south experiment facilities.

(7) Plugs and liners of beam holes and N&S Facilities (Dwg. D-32881)

A 1 1/2-in.-diam stainless steel header is located near the ceiling of the basement. The catwalk surrounding the subpile room provides access to the branch lines from this header which service the beam-hole plugs and liners. The branch lines of the NOG system extend from the catwalk area to the first floor.

(8) Degasifier and demineralizers (Dwgs. D-22319 and D-22321)

A 1 1/2-in. line, located beneath the basement floor level, provides NOG services to all the demineralizer columns and the degasifier. Every demineralizer unit has a ball-float trap located at the top of each column; the gases passing through these traps enter the NOG system. The eight ball-float traps in these systems are located at the: (1) north reactor anion, (2) north reactor cation, (3) south reactor anion, (4) south reactor cation, (5) degasifier anion, (6) degasifier cation, (7) pool anion, and (8) pool cation. The effluent from the degasifier, itself, does not pass through a ball-float trap; instead, a constant vacuum is maintained in a liquid-air separator by the NOG system.

(9) Basement experiments (Dwg. D-32055)

A 4-in. line provides NOG services to the south side of the basement. This line is located below the basement floor and connects directly to the water trap; it does not connect to the main 8-in.-diam header in the building.

(10) Plug storage (Dwg. D-22334)

A 2 1/2-in. header provides NOG services for the plug-storage holes located in the east end of the basement. Since these storage holes are not sealed, building air flows through them at all times and enters the NOG system.

(11) Expansion pit and decay tank (Dwgs. D-22222, D-22223, and D-22247)

Ball-float traps bleed entrained gases from the reactor primary-coolant system, both at the reactor primary-water decay tank and at the pipe-expansion pit. The decay-tank ball-float trap is located at the manhole directly over the decay tank. Gases in the exit-water line are removed at the high point of the 36-in. section. A 1-in. stainless steel line routes the gases to the 8-in. NOG header just outside Building 3042.

(12) LITR, BSR header (Dwg. D-5232)

NOG service for the LITR and the BSR is provided by a 4-in. header which joins the 8-in. stainless steel line near the southeast corner of Building 3042 (outside the building). This line joins the 8-in. header between the connection from the decay tank and the connection from WC-19.

(13) Waste storage tank WC-19 (Dwg. D-27134)

During normal operation, WC-19 is maintained at a slight negative pressure. A throttling valve in the line between the NOG system and WC-19 is adjusted to obtain the desired negative pressure. There is no ball-float trap in this line.

c. Water collection systems

The accidental introduction of water into the NOG system is quite probable because of the nature of the equipment to which it is connected. The system design included provisions for removal of water from the low point of the piping in the building. Later modifications provided an in-line water removal system. Details of both are given below (see Fig. 6.5).

(1) Catch tank (Dwgs. D-33567 and D-22334)

The 35-gal catch tank is located in the southeast corner of the basement below the floor level. A line connects the tank to the low point of the NOG system in Building 3042. At regular intervals (once a day on the 12-8 shift), the line is closed off and the tank is pressurized with plant air to force the accumulated liquids into the intermediate-level waste system (the hot drain).

(2) Water trap and seal tank (Dwg. D-35721)

After about one and one-half years of reactor (ORR) operation, the increased use of the NOG system for experiments and reactor auxiliary equipment made the operation of the catch tank (described above) troublesome. Consequently, an additional water trap was installed at the low point in the 8-in. off-gas duct to remove liquids (also by gravity) prior to the tie-in point for the original catch tank. Most of the liquid entering the NOG system from Building 3042 will enter this water trap (dimensions: 18-in.-diam cylinder, 18 in. high). The location and design of the trap prevent the formation of a water leg in the piping. A 4-in. line in the bottom of the trap allows any collected water to flow to a 150-gal seal tank located in the subpile room (below the grating). An air sweep is maintained through the seal tank by the cell-ventilation system, and an overflow line allows excess water to flow from the seal

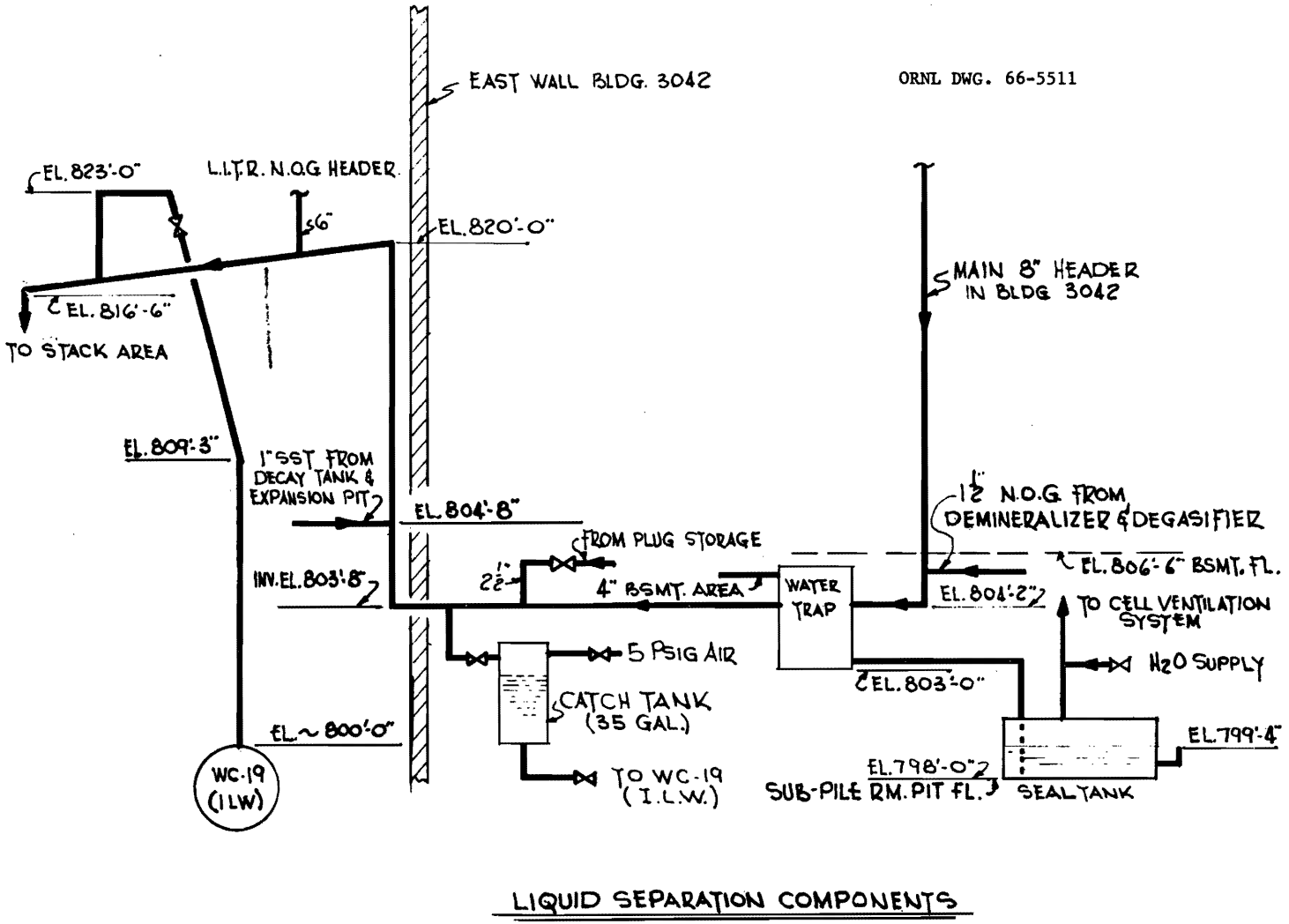

Fig. 6.5. ORR normal off-gas system in-line water removal.

tank to a nearby process drain at a rate equal to the collection rate. Water can be added to the seal tank to prevent the seal between the building and the normal off-gas system from being broken. This water level is checked routinely and water is added as needed.

d. Filter system (Dwg. series 11105, RC2-21-6, E-10167-D-104-D)

The NOG is equipped with two banks of filters (Fig. 6.4), each containing one roughing filter or prefilter, one absolute (HEPA) particle filter, and one charcoal filter.

The roughing filters are pleated fiberglass type with 48% NBS dust-test efficiency (American Air Filter Co., type H, or an approved equal). The roughing filters measure 23 1/2 x 23 1/2 x 1 7/8 in. thick.

The absolute (HEPA) filters are usually of pleated, fiberglass construction with corrugated aluminum or asbestos separators and are contained in a fire-resistant cell (usually plywood) which measures 24 x 24 x 11 1/2 in. thick. These filters are purchased under UCCND Material Specification V07 AZ-3a, and are designed to remove 99.95% of all particles $\geq$0.3 micron in diameter.

The charcoal filters, also 24 x 24 x 11 1/2 in. thick, must meet ORNL Procurement Specification XSP-224. They are of perforated pleated stainless steel construction, with a minimum bed depth of 1 in. of high-purity, coconut-shell charcoal treated with iodine. The charcoal is thoroughly compacted to minimize settling during use.

The filter banks are housed in two separate stainless steel filter boxes which are located in a concrete filter pit south and east of the ORR building (across Hillside Avenue). The filter banks are piped in parallel and may be used individually or jointly since each bank is equipped with both inlet and exit isolation valves.

The filter system is equipped with a water trap designed to collect any water in the inlet pipe or in the filter boxes and drain it to a sump located under the floor of the pit. Overflow from the sump is routed to the NOG header downstream of the filters.

The filter pit is equipped with an electric heater which is thermostatically controlled. This heater is used to maintain the filter housings at a temperature sufficiently high to minimize moisture condensation.

Sampling connections and lines are also provided for facilitating filter efficiency tests.

Pressure changes expected in the filter system are tabulated in the "Periodic tests" section of this procedure.

5. Instrumentation, ORR NOG system (Dwg. RC2-21-6)

Instrumentation for the NOG system includes pressure and radiation sensors within Building 3042 and temperature, radiation, flow, and pressure drop sensors at the filter banks. In most cases, appropriate readout instruments are located either in the ORR control room or at the filter pit.

a. Main header pressure instrumentation

If an abnormal condition results in a loss of vacuum, the pressure-sensing instrumentation will initiate a reduction in reactor power. This instrumentation is dual tracked using two standard Foxboro ΔP cells (calibrated over the range of +5 in. H_2O to -55 in. H_2O) as the sensing elements.

Pressure switches PS-63A, -63B, and -63C receive signals from pressure transmitter PT-63 (connected to the 4-in. header at the north balcony, OG-9). Pressure switches PS-64-A, -64B, and -64C are piped to PT-64 which is connected to the 8-in. header in the basement. All six pressure switches are located in the ORR control room pressure-switch cabinet No. 2. Both channels (63 and 64) are connected to a dual-readout recorder

located on the graphic panel in the ORR control room. The negative pressure sensed by channel 63 (normally about -37 in. H_2O) is indicated by a red-inking pen. The negative pressure sensed by channel 64 (normally about -39 in. H_2O) is indicated by a green-inking pen.

(1) Alarm signal

Pressure switch PS-63A is actuated, and subsequently the pressure alarm, PA-63, when the normal off-gas pressure increases above -25 in. H_2O. A similar action is also obtained through a separate but similar channel with PS-64A as the sensing element through PA-64. Annunciator AP-45 (NOG high pressure) will alarm, thus indicating the condition.

(2) Setback signal

Switches PS-63B and PS-64B are independent pressure switches which activate contact switches RS-88 and RS-90, respectively, if the normal off-gas pressure increases above -20 in. H_2O. Actuating these switches, RS-88 and RS-90, will effect a reactor setback through the reactor control circuitry.

(3) Reverse signal

Switches PS-63C and PS-64C are independent pressure switches which activate contact switches RS-89 and RS-91, respectively, if the normal off-gas pressure increases above -19 in. H_2O. These switches will provide an auxiliary reverse if the setback signal does not place the reactor on a negative 100-s period within 5 s. This is effected through the reactor control circuitry.

The monitoring of this system and the resulting reduction in reactor power, when an abnormal negative pressure exists in the normal off-gas system, provide corrective action to minimize hazards before an experiment experiences difficulty.

b. Radiation detector (Building 3042 basement)

An ORNL Q-3006 gamma monitor (RIM-67) with its associated GM probe (RE-67) is used to measure the radiation level at the top of the water trap in the 8-in. main header (basement floor, near the subpile room door). This instrumentation will cause an alarm (RA-67, AP-43) if the detector indicates a radiation level of 40 mr/h, or about 20 times the normal level. This instrument is not connected to a recorder, and direct observation is necessary to confirm the source of an alarm.

c. Filter pressure-drop indicators

Each filter bank is equipped with three differential pressure indicators which provide a direct measurement of the resistance to flow of each filter. This local instrumentation is shown in Fig. 6.4, and is enclosed in a panel just south of the filter pit. Pressure-drop data taken on a regular schedule will provide a basis for decisions regarding replacement of filters.

d. Flow measurement

An indication of the flow through the header downstream of the filter pit is provided by FE-903, a differential pressure gauge connected directly across an orifice plate in the line. The indicator for the instrument is also located on the local panel just south of the filter pit. A calculated calibration of the orifice is given in the table below.

Table 6.2. NOG orifice (FE-903) calibration

Gauge reading (in. H_2O)	Air flow (cfm)
0.09	100
0.20	150
0.35	200
0.80	300
1.40	400
2.20	500
3.00	600

e. Charcoal exit temperatures

The locations of the temperature-sensing elements (thermocouples) for the charcoal exit temperature measurement are shown in Fig. 6.4. These thermocouples are connected to temperature recorder TR-902, located on vertical panel 1 in the ORR control room. Recorder switches provide an alarm through TA-902 (AP-40) if a higher-than-normal temperature is recorded (setpoint approximately 100°F) or if power to the instrument is interrupted. As may be noted in the figure, there are two thermocouples provided for each bank of filters. As a general rule, both thermocouples on each charcoal filter will be maintained operable. Since failures will occur, however, operation with only one thermocouple will be permitted with the duration of such conditions to be an administrative decision based on operating conditions at the time.

If a temperature alarm occurs, investigation should commence immediately to determine the cause. If the other temperature measurement indicates normal conditions, a thermocouple failure is a high probability, and action should be initiated to verify this. A faulty thermocouple must be "jumpered" in the recorder to permit proper response of the recorder to the remaining thermocouples.

f. Radiation measurement, filter pit exit

The radiation level adjacent to the exit header is detected by an ORNL Q-3006 (RIM-68) gamma monitor, with primary element RE-68 shielded so as to exclude radiation from other sources. The output of RIM-68 is recorded on RR-68 located on vertical panel 10. Radiation levels of approximately two times normal level will cause an alarm through instrument switch RX-68, which actuates process annunciator AP-43 (RA-68).

g. 3039 stack area

The instrumentation in the 3039 stack area which monitors the status of components and operating conditions is displayed in Building 3105 control room. The parameters which are monitored include flow, pressure, and status of blower units. A pressure switch located in the inlet manifold of the blowers will activate the emergency steam-turbine-driven blower if the pressure increases to -27 in. H_2O. The emergency blower is also activated upon failure of electrical power to the area.

The NOG scrubber is equipped with an emergency steam-turbine-driven pump which is activated upon the loss of pressure at the pump discharge or upon the loss of electrical power. Remote monitoring in Building 3105 indicates the status of the pumps, P across the scrubber, and P across the filters with an alarm to indicate high P.

The radiation level of the gaseous waste being discharged to the atmosphere from the plant-wide NOG system is monitored continuously. These data are recorded in Building 3105, and an alarm is initiated if the radiation level of the gases exceeds a predetermined value (approximately 15,000 counts/min). These local alarms are to be reported to the ORR shift supervisor by the tank farm personnel.

6. Operational procedures

a. Normal operation

Generally, the NOG system remains in service without interruption with a normal pressure of -40 ($\pm$5) in. H_2O (as indicated by the dual-pen readout in the ORR control room). As might be inferred from the preceding descriptive material, no special operating procedures are required for normal conditions; however, the following rules apply.

(1) Any connections to the system must be approved by the Reactor Supervisor or his designated representative. Approval by the Technical Section may also be required.

(2) The system should not be opened to atmosphere to the extent that the resulting pressure increase will cause an ORR shutdown.

(3) The flow from an individual experiment will be limited to a few cfm because of the low flow capacity of the system.

b. Removing the system from service

It is expected that the NOG will remain in service almost 100% of the time. Occasional shutdowns for maintenance or alterations will be required; however, the infrequency of such shutdowns requires that a special procedure be prepared for each occasion. These procedures will vary in content depending upon the work to be done, the number of experiments in operation, the conditions within the system, the operating history, and other factors. Generally speaking, however, the following steps will apply.

(1) Determine that the ORR is shutdown and that it will remain down for the duration of the NOG outage.

(2) Determine that there is no possible source of gas which would cause pressurization of the system. This requires that all experiments, pumps, and other equipment tied into the system be valved out and tagged. A careful review of the system and a carefully prepared checklist are required to accomplish this.

(3) Determine that the BSR is shutdown and that the NOG system at the BSR is properly removed from service in accordance with current BSR procedures.

(4) Close valve HV-14. This is a slide valve located downstream of the filter pit on the exposed portion of the 8-in. header (south of the retaining wall and approximately 40 ft from the south edge of the pit).

c. Returning the system to service

(1) Determine that all lines, valves, etc., on the local (building) NOG system are ready to be returned to service.

(2) Determine that at least one of the filter banks is ready for service, i.e., both inlet and exit valves open. (Both filter banks may be in service if desired.)

(3) Slowly open valve HV-14, thus returning the system to service. CAUTION: If the valve is opened suddenly, the water in the drain trap for the filters will probably be pulled into the system.

(4) Remove, with proper approval, any tags remaining on valves or other equipment and re-establish off-gas service to all affected areas including experiments, process equipment, any special equipment, and the BSR.

d. Switching filter banks

It will prove necessary to switch filter banks occasionally to accommodate efficiency checks, maintenance, or operational requirements. Since it is necessary that one bank of filters be in service at all times, the following procedure must be followed to prevent inadvertent loss of vacuum and/or loss of the water from the filter drain seal.

(1) Place both filter banks in service in parallel by (1) slowly opening the exit valve at the filter bank not in service and (2) slowly opening the inlet valve of the same filter bank, thus placing the unit in service.

(2) Check the pressure drop across each filter of the bank just placed in service. The values observed should be approximately 1/2 the normal pressure drops with one bank in service.

(3) Remove the other filter bank from service by (1) slowly closing the inlet valve and (2) slowly closing the exit valve.

(4) Make a final check of the pressure drop across the filter bank which was placed in service. Record the values in the log book.

e. Replacing filters

Filter replacement will become necessary in the event that a unit becomes dust laden, fails to meet Laboratory efficiency requirements, or otherwise fails to qualify as a reliable filter. The exact procedure to be followed to effect a change will depend upon the conditions at the time the replacement is to be made, the type of filter to be replaced, prevailing weather conditions, and other factors which might develop. It should usually be possible to leave the NOG system in service by simply switching operation to the filter bank which is not affected by the change. Upon occasion, however, it may be necessary to remove the entire local system from service to facilitate the filter change. In all instances, the responsible reactor shift supervisor will determine the appropriate mode of operation required for the change.

(1) Preparation for filter replacement

(a) Place the system in the proper operating mode, i.e., bypassing the filter to be changed, or shut down the entire system. Appropriate procedures are detailed above.

(b) Remove sections of the top of the filter pit (concrete plugs) as necessary to provide access to the filter housing. (Health Physics surveillance must be provided.)

(c) Establish a contamination zone in and near the filter pit and provide the necessary supplies for the job.

(d) Provide a radiation monitor with local alarm (for personnel protection).

(e) Obtain and post the proper work permits, thus ensuring that a radiation survey has been made.

(2) Opening the filter housing:

(a) Recheck the inlet and exit valves to determine that they are closed.

(b) Loosen the quick-opening clamps or the wing nuts which secure the filter-housing cover sections to be removed (see Dwgs. H-11105-EG-004-D and -005-D).

(c) With Health Physics surveillance, open the housing by removing the sections of the top. (It may be necessary to relieve the negative pressure by prying up the top with a screwdriver or other prying tool.)

(d) If the HEPA or charcoal filter is to be replaced, loosen the appropriate quick-opening clamps to free the filter or filters. Clamps for the HEPA filter are on the north end of the filter box, while clamps for the charcoal filter are on the south end (see Dwg. H-11105-EG-005-D). The roughing filter is not clamped in place and may be removed simply by lifting it vertically.

(e) Replace the filter(s) as scheduled using due caution in regard to radiation and contamination control. The filter(s) should be checked by Health Physics as they are removed, bagged, and properly tagged for disposal, storage, or maintenance.

(f) Carefully clamp the new filter(s) in place and check the gaskets for uniform compression.

(g) Replace and clamp the top of the housing. NOTE: The new filters should be tested by QA&I as soon as possible following their installation. These tests may require that the ORR and BSR be shut down or that

special valving arrangements be made and, therefore, by necessity, must be carefully scheduled and conducted under the direction of the Reactor Supervisor or his designated representative.

7. Periodic checks

Checks and duties performed by the reactor operators are aimed toward verifying that the system is operating properly, without excessive water accumulation or other malfunction.

a. Catch tank

Once each day on the 12-8 shift, as a part of the routine checks, the catch tank is purged of any water which may have accumulated. The catch tank is located in a small pit in the basement floor in the southeast corner of the ORR building. Five valve handles extend from this pit. They are identified as follows: No. 1 valve is in the 3/4-in. line from the low point of the NOG system to the catch tank; No. 2 valve is in a 1/4-in. line which runs from the 2 1/2-in. plug-storage header to the catch tank; No. 3 valve is just below the catch tank in the 1-in. hot drain line; No. 4 valve supplies plant air at 5 psig to the catch tank; and No. 5 valve is in the 2 1/2-in. plug-storage header line. The procedure for purging the catch tank is as follows: (1) close valves Nos. 1 and 2; (2) open valve No. 3; and (3) open valve No. 4. After the catch tank is emptied (usually in about 5 min), close valves Nos. 4 and 3 then open valves Nos. 2 and 1, in that order.

b. Seal tank

Once each day on the 12-8 shift, as a part of the routine checks, the overflow leg of the seal tank in the subpile room is checked for the proper water level. Additional water is added if necessary.

c. Filter pit

The pressure drop across each bank of filters (in service), the total flow, and the water level in the water-trap sump are checked at least once each day (4-12 shift). The data obtained on each Saturday's check are to be recorded in the logbook. This check will help determine when a filter change is needed. Expected pressure drops for both clean and dirty filters are tabulated below.

Table 6.3. Filter differential pressures

Type filter	Gauge number		ΔP, clean (600 cfm)	ΔP, filter change needed (600 cfm)
	East bank	West bank		
Prefilter	PD1-901-1	PD1-900-1	0.5 in. H_2O	1.0 in. H_2O
HEPA	PD1-901-2	PD1-900-3	0.6 in. H_2O	1.8 in. H_2O
Charcoal	PD1-901-3	PD1-900-3	0.6 in. H_2O	>0.6 in. H_2O

d. Instrument checks

During the end-of-cycle shutdowns, a functional check on the instrumentation associated with the NOG system is performed; refer to Section 2.5 for this step-by-step procedure.

e. Filter efficiency checks

To ensure filter reliability, each filter bank is subjected to efficiency tests every six months and must meet the minimum Laboratory removal efficiency requirement of 99.95% for particles

greater than 0.3 micron and 99.9% for elemental iodine (particle filters and charcoal filters, respectively). Both the dioctyl phthalate (DOP) particle test and the iodine test require that only the bank being tested be in service; i.e., individual inlet and exit sample points were not provided. Filter efficiency checks are made by QA&I.

6.2.4. Pressurizable Off-Gas (POG) System

Reference drawings

RC2-21-8, RC2-28-4A, RC2-28-4B, RC2-28-4C, RC2-28-4D, RC2-28-4E, D-39095, D-39101, D-39102, D-29103, D-39104, D-39106, D-42727, D-42728, D-43148, D-44864, D-48910, and D-50469

1. Purpose

The pressurizable off-gas system was installed for use by experiments which will operate at greater than atmospheric pressure and with a large air supply; i.e., the system will provide a high-suction, low-flow exhaust of 500 scfm at minus 50 in. H_2O pressure; the gases discharged from experiments may pressurize the off-gas system if downstream stoppage should occur.

2. Description

The system has several intakes around the reactor pool for experiment tie-in. The main line begins at approximately the mid-section of the reactor pool on the north side, continues eastward along the north wall of the reactor pool, southward across the east wall, then westward along the south wall of the three pools and penetrates the west pool wall at thimble T-23 on the second level. The line is shielded by 4 in. of lead from where it turns downward through the floor to the point where it penetrates the

ORR building wall on the first level, west, approximately 5 ft underground. Just outside the ORR building, the main line is joined by a 4-in. line which provides service for the LITR. The main line continues (as depicted in Fig. 6.6) to the filter pit just east of Building 3039.

The main line is joined, prior to reaching the filter pit, by an 8-in. branch line on the south side of the ORR building. This branch line penetrates the south wall of the ORR building near the 24-in. cell-ventilation duct, basement level, just above the B-9 experiment cubicle. An HN-1 line enters the branch line at this point. It then continues to the GCR Loop 2 equipment cell in the basement, through a charcoal trap and filter, and up and into the GCR Loop 2 containment cell.

After leaving the filters, the off-gas continues through a 10-in. overhead line to a 2000-cfm, 30-hp blower and is then discharged to the 3039 stack.

There is an interconnecting line between this system and the LITR-BSR ventilation system on the exit side of Building 3039. The purpose of this line is to supply a sufficient volume of air to prevent the blower from overheating. A check valve and slide valve are installed in the line. The check valve prevents a reverse flow into the LITR-BSR cell-ventilation system. The slide valve regulates the flow through the blower.

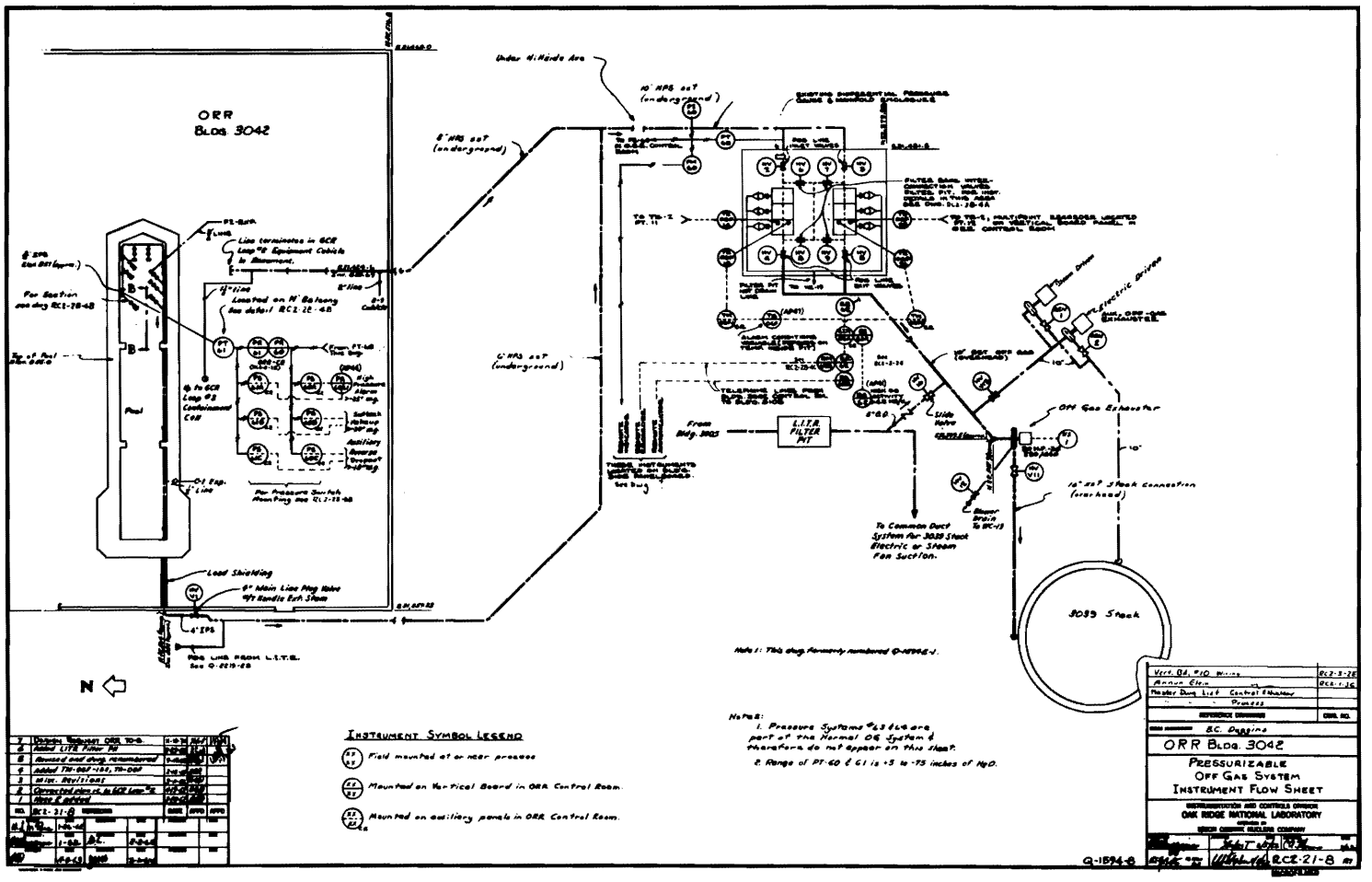

Fig. 6.6. Pressurizable off-gas system.

The filter pit (H-11248-EF-001-D) consists of two banks of filters (north and south) separated by a 24-in. x 11-in. air duct. This air duct and the bank interconnection valves formerly allowed the use of the filter banks either individually or in parallel. Due to the possibility of gas leakage into the air duct, thereby allowing some gas to bypass the filter units, valves HV-6, -7, -8, and -9 openings in the air duct wall were blanked and sealed. This action eliminates the use of the filter banks in series. Normally, the north or the south bank will be used individually.

Each filter bank is composed of four compartments. The first compartment, the inlet, contains a roughing filter for removal of any particulate matter and also a pair of bank interconnection valves which have been blanked off. The second compartment contains an activated charcoal assembly for the removal of gaseous fission products, primarily iodine. The third compartment contains an absolute filter. The last compartment contains the exit line and another pair of bank interconnection valves which have been blanked off. Each of the first, second, and fourth compartments contains a floor drain with a removable stopper which is routinely inspected and temporarily removed as needed to allow condensate or in-leakage water collected from the system to drain to the ILW (WC-19).

3. POG auxiliary blower

Reference drawings

I-2039D-EE-001-D, Rev. 1 and E-2039D-ED-003-D, Rev. 1

The operation and maintenance of the POG system from the exit side of the POG filter pit is the responsibility of the Chemical Operation Group; however, since the POG system is an important part of the ORR operation, the ORR operating personnel should be familiar with this part of the system and give the Chemical Operation Group assistance when needed.

A 2000-cfm, steam-powered (automatic start) blower and an auxiliary 2000-cfm, electrically-powered (manual start) blower serves as a backup for the POG 2000-cfm, electrically-powered blower (see Fig. 6.6). It should be noted that this system also serves as a backup for the NOG system. If there is an abnormal condition in which the pressure of the POG electrically-powered blower input line increases to -35 in. H_2O, the steam-powered blower is started (125 psi steam pressure to the turbine) by both pneumatic and electrical signals to PCV-1 and PCV-3, respectively (valves will open). This condition would exist in the case of an electrical power outage and/or failure of the POG electrically-powered blower. The 2000-cfm auxiliary electrically-powered blower would be used during an extended shutdown of the POG electrically-powered blower.

The most likely cause of a shutdown of the POG electrically-powered blower and startup of the steam-powered blower will be during an electrical power interruption. Assuming the power interruption also results in an ORR shutdown, the steam-powered blower will provide sufficient negative pressure to clear the POG system reactor setback and reverse points for immediate reactor startup. The chemical operator will restart the POG electrically-powered blower and stop the steam-powered blower as soon as practical (he has several systems at the stack area to be restarted). On the failure of the ORR electrically-powered blower, the steam-powered blower will start when the POG negative pressure increases to -35 in. H_2O; however, a momentary reactor setback (-20 in. H_2O) may be expected due to the time lag between failure of the electrically-powered blower and startup of the steam-powered blower.

4. Radiation instrumentation

An ionization chamber (RE-62), located on top of the exit line from the filter pit, monitors the radiation level of the off-gas. The signal is transmitted to the pressurizable off-gas gamma monitor located in the ORR control room and, subsequently, to the POG

radiation recorder (RR-62) located on the vertical panel No. 10 in the ORR control room. Recorder switch RS-62A and, subsequently, the radiation alarm RA-62 are actuated upon receiving a signal indicating twice the normal radiation background.

A radiation modifier (RM-62B), an integral part of RR-62, transmits the POG radiation-level signal to a remote indicator located on a panel in Building 3105; RS-62B actuates a remote annunciator also located on a panel in Building 3105. The purpose of these instruments is to alert the patrol chemical operators of the source of the high-level radiation which is being discharged into the 3039 stack so that appropriate action can be taken.

5. Pressure instrumentation

A pressure transmitter, PT-60, located at the filter pit, is connected to the inlet line of the filter pit and sends its signal to a pressure recorder, PR-60 (red pen), located on vertical panel No. 10, in the ORR control room. Pressure transmitter PT-61 (located on the north balcony) is connected to the 3/4-in. pressurizable off-gas line located on the north side of the reactor pool. Pressure transmitter PT-61 transmits its signal to PR-61 (green pen) also located on vertical panel No. 10 in the ORR control room.

Pressure switches PS-61A, PS-61B, and PS-61C are actuated by PT-61. Pressure switches PS-60A, PS-60B, and PS-60C are actuated by PT-60. These pressure switches are all located in the ORR control-room pressure switch cabinet No. 2.

a. Alarm signal. Pressure switch PS-61A is actuated and, subsequently, the pressure alarm PA-61 if the POG pressure increases to minus 25 in. H_2O; PS-60A and, subsequently, PA-60 are also activated if the POG pressure increases to minus 25 in. H_2O.

b. Setback signal. Pressure switch PS-61B, which actuates recorder switch RS-86, and pressure switch PS-60B, which actuates recorder switch RS-84, are actuated if the pressurizable off-gas pressure increases to minus 20 in. H_2O. A setback (makeup) signal will be initiated from either RS-86 or RS-84.

c. Reverse signal. Pressure switches PS-61C, which actuates RS-87, and PS-60C, which actuates RS-85, are also actuated if the pressurizable off-gas pressure increases to minus 19 in. H_2O. An auxiliary reverse (dropout) signal will be initiated from either RS-87 or RS-85.

6. Differential pressure instrumentation

The differential pressure instrumentation (Dwg. D-39102, Rev. 1) consists of two 0- to 4-in. pressure gauges. Four 3/8-in. copper tubes are connected to each gauge. The sampling points for these tubes are one each for each of the four compartments. By proper valving at the pressure gauge enclosure (located at the filter pit), the pressure drop across the absolute filter, the charcoal assembly, or the roughing filter, or any combination of these can be obtained. The gauges, located in the pressure gauge enclosure, are identified and used in obtaining the measurements.

7. Filter-pit inspection procedure

a. Purpose. The pressurizable off-gas filter pit consists of two filter banks (north and south) with four compartments in each bank - roughing filter, charcoal filter, CWS filter, and exit compartment. The intent of inspecting these compartments is to determine if any water has collected and to remove it.

b. Frequency. The inspection is required in only three of the compartments and will be made about every two months.

c. Method. NOTE: Prior to performing any of the inspection steps, the operator must ascertain that the bank to be inspected is valved out of service and that the other bank is in service.

(1) Roughing filter compartment

(a) Remove the inspection plug cover plate and inspection plug.

(b) Loosen the rubber stopper by means of a special T-handle tool stored at the filter-pit area. Pull the stopper by using a long hook (also stored at the filter-pit area)

inserted in the bale that is welded onto the side of the stopper rod. Do not remove the T-handle tool until after the stopper is removed, but use it to steady the pulling of the stopper with the hook.

NOTE: In the east compartment only, it is necessary that the stopper be removed regardless of whether water is visible since both the center and west compartment drain lines tie into the east compartment drain line.

(2) Charcoal filter compartment

(a) Remove the inspection plug cover plate and inspection plug.

(b) If no water is visible, reinstall the plug and cover plate.

(c) If water is visible, remove the rubber stopper in a manner similar to that of the east compartment.

(d) After the water is drained, replace the stopper, plug, and cover plate.

(3) CWS filter compartment

(a) Remove the large inspection plug cover plate and inspection plug from the bank not in service.

(b) If no water is visible, reinstall the plug and cover plate.

(c) If water is visible, loosen the rubber stopper by reaching down into the opening and turning the nut on top of the approximately 6-ft rod counterclockwise. After the stopper has loosened, loop a rope around the nut end and pull up to remove it.

(d) After the water has drained, replace the stopper, plug, and cover plate.

8. Pressure drop test procedure

Since the POG system is operating at a small percent of maximum load, an additional quantity of air is allowed to enter the system through a 4-in. standpipe on the inlet side of the filter pit. The total flow, adjusted to the same value for each test, is established by measuring the velocity pressure (V.P.) in the 10-in. duct on the downstream side of the filter pit with a gauge marked "V.P." The valve on the interconnecting line from the LITR-BSR cell-ventilation duct must be closed prior to adjusting the flow through the filters; and, following the completion of the test, the valve must be restored to the open position.

The pressure drops across the roughing filter, the charcoal filter, the CWS filter, and the combined filters are taken for each filter bank (i.e., north and south). Since these measurements are taken with the filter banks isolated (i.e., with only one bank in service), precautions should be taken to ensure that the required valves are closed tightly to prevent leakage. The flow is adjusted after the filter bank is placed in service; the various pressure drops are read, and then the flow is rechecked.

These tests will be repeated every six months or after an incident which might affect the pressure drop across the filters. The following itemized procedure will be followed in completing this test:

a. Ensure that all experiments which are connected to the pressurizable off-gas system are isolated and are not discharging any gases into this system. This, of course, requires that the reactor be shut down; therefore, the test will be scheduled only during a major ORR shutdown.

b. Close the valve (HV-10) on the interconnecting line from the cell ventilation.

c. Establish the proper valving for either filter bank to be in service. NOTE: Only one filter bank at a time will be checked.

d. Check the zeroes on the Magnehelic gauges used to measure static pressure and velocity pressure by closing valves Nos. 9 and 10 and opening valves Nos. 11 and 12 (see Fig. 6.7). Adjust zeroes if needed. Zeroes on the Magnehelic gauges used to measure the pressure drop across the filters may be checked by disconnecting the quick disconnects provided to isolate the gauges. Adjust zeroes if needed.

e. Remove all but <u>one</u> bolt from the flange on the 4-in. standpipe located on the inlet line to the filter pit.

f. After opening valves Nos. 9 and 10, and closing valves Nos. 11 and 12, adjust the flange to obtain a reading of 0.30 in. H_2O on the gauge marked "V.P." (velocity pressure). Record the reading as the "velocity pressure in the 10-in. pipe at start" (Item 2, Example 6.1).

g. Read the static pressure (S.P.) gauge. Record the reading as "static pressure in 10-in. pipe at start" (Item 3, Example 6.1).

h. Record pressures and pressure drops on the data sheet, Example 6.1. If necessary, readjust the 4-in. flange to maintain 0.30-in. H_2O on the V.P. gauge (see Fig. 6.7).

   (1) For the static pressure (S.P.) at an upstream point in the pit (north filter bank), connect the low-pressure side of the ΔP gauge to valve No. 1 and open this valve. Leave the remaining ΔP valves closed (Item 4, Example 6.1).

   (2) For the north roughing filter ΔP measurement, connect the low-pressure side of the ΔP gauge to valve No. 2 and the high-pressure side to valve No. 1. Open valves Nos. 1 and 2; the remaining valves should be closed. (Record as Item 5, Example 6.1).

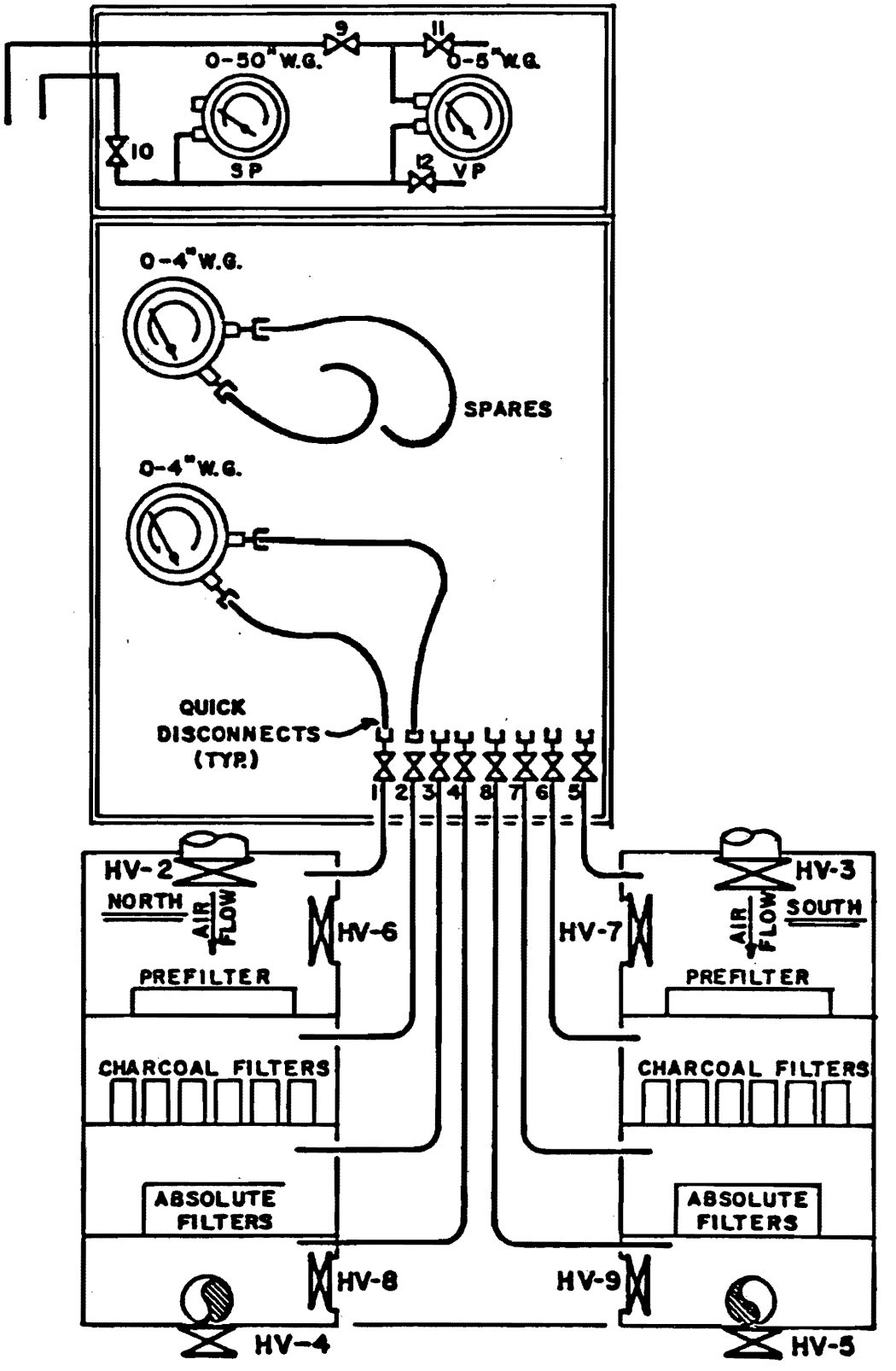

Fig. 6.7. Pressurizable off-gas filter pit gauge panel.

ORR Pressurizable Off-Gas Filter Pit Building 3109 Test Data

Supervisor _____ Date _____

		North Compartment		South Compartment	
		Valve Nos.	In. H_2O	Valve Nos.	In. H_2O
1.	Temperature _____°F				
2.	V.P. in 10-in. pipe at start				
3.	S.P. in 10-in. pipe at start				
4.	S.P. at upstream point in pit	1		5	
5.	Roughing filter ΔP	1-2		5-6	
6.	Charcoal filter ΔP	2-3		6-7	
7.	Final (CWS) filter ΔP	3-4		7-8	
8.	All filters ΔP	1-4		5-8	
9.	V.P. in 10-in. pipe at finish				
10.	S.P. in 10-in. pipe at finish				
11.	S.P. at downstream point in pit	4		8	
		Before	After	Before	After
12.	Fan motor amps				

NOTE: When the pressure drops approach the values listed below, an evaluation will be made.

1. Roughing filter 1.5
2. Charcoal filter 0.6
3. Final (CWS) filter 3.0

Example 6.1.

(3) For the north charcoal-filter assembly ΔP measurement, connect the low-pressure side of the ΔP gauge to valve No. 3 and the high-pressure side to valve No. 2. Open valves Nos. 2 and 3; the remaining valves should be closed (record reading as Item 6, Example 6.1).

(4) For the north absolute (CWS) filter ΔP measurement, connect the low pressure side of the ΔP gauge to valve No. 4, and the high pressure side to valve No. 3. Open valves Nos. 3 and 4; the remaining valves should be closed (record reading as Item 7, Example 6.1).

(5) For the total pressure drop across the north bank, connect the low-pressure side of the ΔP gauge to valve No. 4, and the high-pressure side to valve No. 1. Open valves Nos. 1 and 4; the remaining valves should be closed (record readings as Item 8, Example 6.1).

(6) For the static pressure (S.P.) at an upstream point in the pit (south filter bank), connect the low-pressure side of the ΔP gauge to valve No. 5 and open this valve. Leave the remaining ΔP valve closed (item 4, Example 6.1).

(7) For the south roughing filter ΔP measurement, connect the low-pressure side of the ΔP gauge to valve No. 6, and the high-pressure side to valve No. 5. Open valves Nos. 5 and 6; the remaining valves should be closed (record readings as Item 5, Example 6.1).

(8) For the south charcoal filter assembly, ΔP measurement, connect the low-pressure side of the ΔP gauge to valve No. 7, and the high-presure side to valve No. 6. Open valves Nos. 6 and 7; the remaining valves should be closed (record readings as Item 6, Example 6.1).

(9) For the south absolute (CWS) filter ΔP measurement, connect the low-pressure side of the ΔP gauge to valve No. 8 and the high-pressure side to valve No. 7. Open valves Nos. 7 and 8; the remaining valves should be closed (record readings as Item 7, Example 6.1).

(10) For the total pressure drop across the south bank, connect the low-pressure side of the ΔP gauge to valve No. 8 and the high-pressure side to valve No. 5. Open valves Nos. 5 and 8 ; the remaining valves should be closed (record readings as Item 8, Example 6.1).

i. Recheck the velocity pressure (V.P.) in the 10-in. pipe; the static pressure (S.P.) in the 10-in. pipe; and the S.P. at the downstream point in the pit (Items 9, 10, and 11, Example 6.1). The static pressure at the downstream point is measured by connecting the low-pressure side of the ΔP gauge to either valve No. 4 (north) or valve No. 8 (south), with the high-pressure side open to the atmosphere (disconnected).

j. Record the fan amperage on the data sheet.

k. Close and secure the 4-in. flange.

l. Reset the valve on the interconnecting line from the LITR-BSR cell-ventilation system. Adjust to establish 52 in. H_2O negative pressure as indicated on the ORR control room instrumentation.

m. Check all valves at the gauge panel to ensure that they are closed.

n. Make proper valve arrangements to place the desired filter bank in service.

o. Notify all affected experimenters that the POG is available for use.

p. File the completed data sheet in the ORR shutdown file.

9. Thermal instrumentation (Ref. Dwg. RC-2-28-4A)

Iron-constantan thermocouples (TE-OGF-1A, -2A, -1B, and -2B) have been provided to monitor the temperature of the air immediately after it has passed through the charcoal filter units. The possibility exists of the charcoal becoming loaded with radioactive iodine, thereby producing a heat source.

Thermocouples (TE-OGF-1A and -1B, monitoring the top north and top south charcoal units, respectively) transmit signals to the multipoint recorder, TR-2, located in vertical panel No. 5 in the ORR control room. Thermocouples (TE-OGF-2A and -2B which monitor the bottom north and bottom south charcoal units, respectively) transmit signals through a converter to actuate an annunciator when the temperature exceeds 85°F.

As a general rule, one reliable thermocouple on the filter bank in service (filter banks on the POG are in service either individually or in parallel) will be considered a minimum. The absolute minimum will be determined by administrative decision based on operating conditions at the time the general rule is approached.

If an alarm occurs from a thermocouple, investigation should commence immediately to determine the cause. If other thermocouples indicate normal conditions, a thermocouple failure is a high probability and action should be initiated to verify this. A faulty thermocouple must be "jumpered" in the recorder to permit proper response of the recorder to the remaining thermocouples.

10. Requirements for use of the POG system

a. All connecting piping must be capable of withstanding 100 psig internal pressure, including all parts of the experiment apparatus subject to backup pressure from the system or the piping protected by pressure-relief systems which do not discharge to the building or directly to the atmosphere.

b. All valved taps to the system must be closed by pipe caps or plugs when not connected to equipment.

c. The system must not be opened to the building or to the atmosphere when any experiment or test capable of causing a positive pressure in the system is discharging gases into it.

d. Check valves may be used to prevent backup pressure but cannot be used as safety equipment because of their inability to be frequently checked for performance.

11. Procedure for placing the POG system in service

a. The shift supervisor must be assured that experiment tie-in is complete and all requirements for use of the system have been met.

b. Ensure that all the valved taps (in the reactor pool and elsewhere) which are not connected to an experiment are closed by pipe caps or plugs and that all valves on these taps are closed.

c. Ensure that the main valve (POG V-1) on the west side of Building 3042 (midsection of building between sidewalk and building) is open and locked.

d. Contact the Chemical Operation foreman and/or operator and request the startup of the POG electrical blower as follows:

(1) Open the valve on the 1 1/2-in. drain line from the blower (POG V-12).

(2) Open the inlet damper to the blower (the damper is normally open).

(3) Reset the "on-off" breaker (located immediately north of the blower).

(4) Press the start button located just below the breaker.

(5) Open the slide valve (POG V-10) no more than 2 in. on the 6-in. line connecting the 10-in. POG line to the 24-in. LITR-BSR cell-ventilation line. Secure the slide valve in the partially open position. (This valve must not be open more than 2 in., intermittent shutdown of the blower has been experienced.) Normally, this valve will be locked in this partially open position.

(6) Open HV V-13 on the line between suction side of POG electrical blower and the auxiliary electric and steam blowers.

e. Determine which bank of filters (north or south) is to be used. Open the appropriate POG line inlet (POG V-2 or -3) and exit (POG V-4 or -5) valves to the bank of filters. Close the POG line inlet and exit valves to the bank which is not to be used.

12. Procedure for removal of the system from service

If this system is to be removed for experiment tie-in or maintenance or if any valved taps are to be opened, the following procedure is to be followed:

a. Ensure that no experiments in the ORR are discharging gases into the system.

b. Close the POG inlet (POG V-2 or -3) and exit (POG V-4 or -5) valves to the filter pit so as to isolate the filter pit.

c. Contact the Chemical Operation foreman and/or operator and request the shutdown of the POG electrical blower.

d. Close the slide valve (POG V-10) and secure in the closed position.

e. Switch the "on-off" breaker to the OFF position.

13. Routine checks

Very few checks are required for this system as it consists of only pipes, filters, a blower, and motor as described in the introduction.

a. Daily

The blower and motor condition should be checked once each shift.

b. Quarterly

(1) The differential pressure across the filter and charcoal assemblies should be checked during each quarterly shutdown as detailed in Example 6.1.

(2) Oil and grease the motor and rotor during the long shutdown.

The filter pit will be inspected every three months.

c. Annually

(1) Visually inspect the charcoal canisters.

(2) Visually inspect the roughing filter.

(3) Visually inspect the CWS filter.

6.2.5. Authorization and Documentation of Changes to the System, Operating Manual, and/or Special Operating Instructions

1. Routine changes

During the course of normal operation, it is necessary to make checks, tests, adjustments, and changes to equipment and/or systems to ensure smooth and reliable operation. This work is performed according to established procedures and may be done by verbal agreement between Reactor Operations personnel and the individual performing the work.

2. Special operating instructions

Temporary changes of procedures and/or deviations from the standard operating procedures are filed in a special "Operating Instructions Book" in the ORR control room. Instructions in this category are authorized by using form UCN-435 (Example 6.2).

3. Operating manual revisions

Revisions to the operating manual are made as required by authorization of senior members of the Reactor Operations Section and the Technical Group. All revisions are formally transmitted to personnel directly associated with the operation of the reactor, to the Reactor Operations Review Committee at ORNL, and to DOE-ORO.

UNION CARBIDE CORPORATION
NUCLEAR DIVISION

OPERATING INSTRUCTIONS

DEPT. AND/OR DIV.	BLDG. OR AREA	DATE

SHIFT RECOGNITION *(Please Initial)*

A					
B					
C					
D					
.....					
.....					
.....					

Supervisor

UCN-455
(12 2-65)

* G.P.O. 1979—640-029 / 2298, REGION NO. 4

Example 6.2.

4. Instrumentation and controls and mechanical changes (change memoranda)

Important mechanical and instrumentation and controls design changes are documented by issuing change memoranda. A formalized system is used in processing the change memorandum to ensure that the proposed change is reviewed and approved by the designated senior staff members. A permanent record of all change memoranda is kept in the Operations Division office. Copies of all change memoranda shall be sent to the Reactor Operations Review Committee and to the DOE-ORO.

a. Mechanical design change memoranda

Mechanical design changes are documented by mechanical design change memoranda (Example 6.3) which may be prepared by anyone knowledgeable of a proposed change; such memoranda are identified by number and title. Each memorandum states the reason for the change, briefly describes the change, and lists the new drawings and procedures and the revised drawings and procedures required. Spaces are provided for the appropriate approval signatures. Space also is provided for acknowledging completion of the drawings, procedures, and field work.

b. Instrumentation and controls design change memoranda

Instrumentation and controls design changes are documented by instrumentation and controls change memoranda (Example 6.4). An I&C change memorandum is prepared by an I&C engineer knowledgeable of the proposed change. Instrumentation and controls change memoranda are identified by number and title. Each change memorandum states the reason for the change, briefly describes the change, and lists the new drawings and procedures and the revised drawings and procedures required. Space also is provided for acknowledging completion of the drawings, procedures, and field work.

OPERATIONS DIVISION
MECHANICAL DESIGN CHANGE MEMO

1. FACILITY	CHANGE NO.
2. CHANGE MEMO PREPARED BY	DATE
3. TITLE OF CHANGE	
4. REASON FOR CHANGE	
5. BRIEF DESCRIPTION OF CHANGE (ATTACH ADDITIONAL DETAILS IF NECESSARY)	

6. DRAWINGS REQUIRING CHANGE	8. PROCEDURES REQUIRING CHANGE
7. NEW DRAWINGS REQUIRED	9 NEW PROCEDURES REQUIRED

10.

This modification does ☐ does not ☐ involve a change in the technical specifications. If a change is involved, explain:

11. APPROVAL SIGNATURES		12. NEW DRAWINGS AND DRAWING CHANGES COMPLETED	
FACILITY SUPERVISOR	DATE	(ACKNOWLEDGED BY)	DATE
DEPARTMENT HEAD	DATE	13. NEW PROCEDURES AND PROCEDURE CHANGES COMPLETED	
		(ACKNOWLEDGED BY)	DATE
OTHER	DATE		
		14. FIELD CHANGE COMPLETED	
OPERATIONS DIVISION DIR.	DATE	(ACKNOWLEDGED BY)	DATE
		(ACKNOWLEDGED BY) OPERATIONS DIVISION	DATE
15. ORNL Safety Committee Review Required ☐ Yes ☐ No		ORNL Safety Committee Review By	Date
16. DOE Review Required ☐ Yes ☐ No		DOE Review By	Date

UCN-9798
(3 7-81)

Example 6.3.

OPERATIONS DIVISION
INSTRUMENTATION AND CONTROLS DESIGN CHANGE MEMO

	CHANGE MEMO NO.
1. FACILITY	DESIGN REQUEST NO.
2. CHANGE MEMO PREPARED BY	DATE
3. TITLE OF CHANGE	
4. REASON FOR CHANGE	
5. GENERAL DESCRIPTION OF CHANGE	

6. DRAWINGS REQUIRING CHANGE	8. PROCEDURES REQUIRING CHANGE
7. NEW DRAWINGS REQUIRED	9. NEW PROCEDURES REQUIRED

10.
This modification does ☐ does not ☐ involve a change in the technical specifications. If a change is involved, explain:

11 APPROVAL SIGNATURES		12. NEW DRAWINGS AND DRAWING CHANGES COMPLETED	
I&C REPRESENTATIVE	DATE	(ACKNOWLEDGED BY)	DATE
I & C DEPARTMENT HEAD	DATE	13. NEW PROCEDURES AND PROCEDURE CHANGES COMPLETED	
		(ACKNOWLEDGED BY)	DATE
OTHER	DATE		
		14. FIELD CHANGE COMPLETED	
OPERATIONS DIVISION DIR.	DATE	(ACKNOWLEDGED BY)	DATE
		(ACKNOWLEDGED BY) OPERATIONS DIVISION	DATE
15. ORNL Safety Committee Review Required ☐ Yes ☐ No		ORNL Safety Committee Review By	DATE
16 DOE Review Required ☐ Yes ☐ No		DOE Review By	DATE

UCN-9797
(3 7-81)

Example 6.4.

6.2.6. Building Pressure Data

On each 4-12 shift during midshift checks and under normal operating conditions, record on the 4-12 Shift ORR Daily Checksheet the status of the building pressure as shown on the manometers located as follows:

Third level - west of hot cells

Second level - west wall

First level - south entrance

First level - north entrance

The readings should be taken when there is no one entering or leaving the building and with the building ventilation in the normal mode. The normal negative pressure readings will range between 0.10 and 0.30 in. H_2O. If the indicated readings on all of the manometers drop below 0.10 in. H_2O and remain there, then a thorough investigation should be made of the ORR building to determine the source of trouble. It is not necessary to reduce reactor power; however, the proper personnel should be notified if the building pressure data show all instrumentation to be reading below the prescribed minimum. All abnormal conditions should be investigated and properly reported.

6.2.7. Saturday Tours at the ORR

A number of safety rules must be observed regarding the Saturday tours in the ORR because of the possibility of some incident which might frighten the visitors or cause them to injure themselves. The shift supervisor should observe the following precautions regarding these tours.

1. The shift supervisor has full responsibility and authority to cancel the ORR tours any time he feels that visitors should not enter the building. This should include any time the reactor is being started up or when work is under way which might involve the release of contamination or otherwise endanger any visitor. Cancellation should be made by calling the Laboratory Shift Supervisor before the tours begin if possible; but a last-minute cancellation should be made if necessary.

2. The shift supervisor is responsible for evacuating the group promptly if an incident should occur, and for this reason he or his designated representative should remain in the vicinity of the control room or the group so that he can direct an evacuation if it becomes necessary. In most cases, except in the direst emergency, it would be better to instruct the group verbally rather than to blow the evacuation horn; however this decision remains with the shift supervisor.
3. The shift supervisor on duty during the 12-8 shift Saturday morning has the responsibility of ensuring that housekeeping is in order. Tidying up the tour route should be especially emphasized, and all tour equipment should be checked for operability.
4. The tour guide is responsible for the conduct of the tour in the ORR; however, he may be given directions by the Operations shift supervisor and may require assistance in case of emergency. The tour guides are aware of, and assume, the following responsibilities.
   a. A maximum limit of 25 people has been placed on the size of each group entering the ORR.
   b. He will deliver a prepared speech to each group as the tour progresses through the ORR.
   c. He is familiar with the ORR evacuation system and has been instructed in the manner in which the group might have to be evacuated if an incident should occur.
   d. While he is conducting tours in the building: (1) he will instruct the visitors at the beginning of his talk not to reach over the pool; (2) he will prevent their dropping anything into the pool; and (3) he will prevent their reaching past the contamination sign to attempt to touch the water or the experiments. If anyone violates this rule, he should be monitored promptly and appropriate action taken.

e. The routine tours should not be permitted to deviate from the established tour route which includes the ORR models; the reactor, pool facilities, and hot cells; and the ORR control room viewed from the outside (control room bypass balcony). Entering the ORR control room is prohibited for such large groups.

f. The guide is responsible for the visitors and should keep them together. If additional help is needed in the ORR building to keep the group from straggling, a member of Operations may assist.

6.2.8. Operation of the Overhead Crane

In order to ensure safe movement of materials with the overhead crane, only qualified personnel are permitted to operate it. Each shift supervisor is responsible for the activity of the crane, and he should make certain that personnel using it observe the following rules. NOTE: All overhead cranes are to be checked daily or before their use, whichever is least frequent. Refer to "Hoisting Equipment Inspection" in Section 8 of the ORR Operating Manual.

1. Any operation of the crane for handling items in the pools must be by Operations personnel or by qualified crane operators. If it is done by a crane operator, the operation must be under the surveillance of Operations personnel.
2. When approaching any of the mechanical "stops" on the crane tracks, cease all movement about 12 in. from the "stops" and then continue movement slowly.
3. The operator should always visually inspect the cable and the cable drum to ensure proper tracking of the cable.
4. The load limits of the crane should never be exceeded. The load limit of the small crane is 2,000 pounds and that of the large crane is 40,000 pounds.
5. Before any carrier is lowered into the pool, approval for the lifting device must be obtained from the Reactor Supervisor.

6. All lifts must be vertical to ensure proper tracking of the cable on the drum.
7. The crane must never be attached directly to any reactor component which is being inserted into or removed from the reactor; e.g., beam-hole plugs, core components, experiment tubes, etc. However, the crane can be used with a chainfall under direct supervision of an ORR supervisor for handling components in special cases.
8. Use of the crane in and around the hot cells will be evaluated by ORR supervision as each particular operation occurs.
9. Prior to using the crane for lifting fuel racks, a checkout must be made on the crane controls to ensure proper operation. The check is as follows:
   a. Turn the "on-off" button on the pendant to OFF and then to ON.
   b. Do not reset.
   c. Attempt to raise and lower the crane hook. If the system is in order, no action of the crane should result.
   d. If the system is in order, press the reset button and proceed.
10. When lifting irradiated fuel with a crane, always post a man at the crane circuit breaker located on column B, third level.

6.2.9. Securing Systems with Locks and Tags

Components of certain systems are required to remain in a particular mode of operation at the ORR complex. Such components (valves and electrical switches), if operated inadvertently and incorrectly, could have an adverse effect on the reactor and subsequently present a possible radiation hazard to personnel in the ORR area. Locks and tags are used to ensure that inadvertent and unauthorized manipulations are not made.

The various systems which are included in this category are as follows: (1) the doors to certain rooms and buildings (Table 6.4), (2) the reactor primary and secondary and pool water systems (Tables 6.5, 6.6,

and 6.7, respectively), (3) the containment system (Table 6.8), (4) the electrical system (Table 6.9), (5) the air supply lines for pneumatic instrumentation (Table 6.10), and (6) the experimenters' equipment (Table 6.11). The Reactor Operations Section keeps the various systems under surveillance and ensures that appropriate control is maintained by securing the systems by one of the following methods:

1. Locked valves and equipment

   It shall be the responsibility of any member of the Reactor Operations Section supervision to secure any system with a Best padlock (3-A series) if it is deemed sufficiently important that misuse of the controls will jeopardize the safety of the reactor. In addition, each locked valve will be tagged with a "Do Not Operate" tag bearing a statement of the reason for locking the valve, the date, and the signature of the person who locked the valve or equipment. Any member of this supervision shall have the authority to unlock the lock provided: (1) he has the approval of the person who locked the lock and signed the tag and/or (2) he has completed a thorough investigation which indicates that unlocking the lock and performing the operation in question is safe.

2. Tagged valves and equipment

   It shall be the responsibility of any member of the Reactor Operations Section supervision to affix a dated "Do Not Operate" tag with his signature to a component of a system when, in his judgment, it is necessary to protect equipment. Such action would generally be taken when the normal status of the system has been temporarily changed to accomplish a specific purpose. Any member of this supervision shall have the authority to remove a tag provided: (1) he has the approval of the person who authorized the installation of the tag and/or (2) he has completed a thorough investigation which indicates that the system has been restored to normal.

Actions which alter the status of a system shall be recorded in the daily ORR logbook.

Table 6.4. Doors to rooms or buildings

Identification	Location	Function	L (locked) and/or T (tagged)	Normal condition
Subpile room door	Building 3042 basement	Access to control-rod-drive mechanism	L	Closed
Primary pump house cell doors (four)	Building 3085	Access to reactor primary pump cells	L	Closed
Reactor secondary heat-exchanger pit gate	Building 3102	Access to heat-exchanger pit	L	Closed
Warehouse door	Building 3095	Access to storage area	L	Closed
North demineralizer cell door	Building 3042 basement	Access to north reactor demineralizer and de-gasifier cation column	L	Closed
South demineralizer cell door	Building 3042 basement	Access to south reactor demineralizer and de-gasifier anion column	L	Closed
B-9 cubicle door	Building 3042 basement	Access to storage area	L	Closed
PWL Equipment room door	Building 3042 basement	Access to radioactive equipment associated with a former experiment	L and T	Closed
Loop 2 Equipment door	Building 3042 basement	Same as above	L and T	Closed

Table 6.4. (continued)

Identification	Location	Function	L (locked) and/or T (tagged)	Normal condition
Loop 2 cell door	Building 3042 1st floor, south	Same as above	L and T	Closed
Shim-rod-drive shop door	Building 3042 basement, east	Access to maintenance area	L and T	Closed
Vault	Building 3042 basement, south-west	Access to ORR-BSR fuel	L and T	Closed
Shim-rod-drive parts storage door	Building 3042 basement, south	Access to shim-rod-drive parts	L	Closed
Elevator machinery room door	Building 3042 basement, south-east	Access to elevator motor and controls	L	Closed
GCR and PWL control room doors (two)	Building 3042 basement, north-east	Access to control room for Loop 2 cold finger and former PWL experiment associated controls	L	Closed
Storage shed door	Building 3042 south pad	Access to hose, portable pumps, etc.	L	Closed
Storage shed door	Building 3101 (former above ground BSR fuel vault)	Access to hose, cable, etc. (majority of contents associated with BSR)	L	Closed

Table 6.4. (continued)

Identification	Location	Function	L (locked) and/or T (tagged)	Normal condition
Fan house door	Building 3003	Access to OGR electrically operated fan blowers	L and T	Variable (locked on off shifts)
ORR building doors	Building 3042	Access to ORR building via badge-operated access system	L and T	Variable (locked on off shifts)

Table 6.5. Valves on the ORR reactor primary water system locked and/or tagged

Valve identification	Location	Function	L (locked) and/or T (tagged)	Normal condition
115-D	Reactor primary pump house	Permits draining of reactor primary system (Quick-opening valve deactivated by ORR Mechanical Change Memo No. 7, February 1970.)	T	Closed and line blanked
109-A	Reactor primary pump house	Permits draining of reactor primary system to storage tanks	L and T	Closed
503-A	Reactor primary pump house	Permits draining of reactor primary system	L and T	Closed
162-A	Reactor primary pump house	Controls inlet to shutdown pump	L and T	Open
163-B	Reactor primary pump house	Controls exit of shutdown pump	L and T	Open
101-A	Reactor primary pump house	Controls inlet to gasoline-driven pump (Mechanical Design Change Memo No. 28, December 9, 1981)	L and T	Open
106-B	Reactor primary pump house	Controls exit of gasoline-driven pump (Mechanical Design Change Memo No. 28, December 9, 1981)	L and T	Open
129-A	Heat-exchanger pit	Permits draining of reactor primary side of heat exchangers (exit line)	L and T	Closed
120-A	Heat-exchanger pit	Permits draining of reactor primary side of heat exchangers (inlet line)	L and T	Closed

Table 6.5. (continued)

Valve identification	Location	Function	L (locked) and/or T (tagged)	Normal condition
303-A	Pipe tunnel	Controls exit-water flow to north and south facilities	T	Open
N-1	First level, north	Controls inlet-water flow to north facility	L and T	Open
S-730	First level, south	Supplies reactor cooling water to south facility	L and T	Open
S-750	First level, south	Supplies reactor cooling water to south facility	L and T	Open
S-739	Basement, south	Permits draining of south-facility annulus	L and T	Closed
S-740	Basement, south	Permits draining of south-facility annulus	L and T	Closed
S-759	Basement, south	Permits draining of south-facility plug	L and T	Closed
S-760	Basement, south	Permits draining of south-facility plug	L and T	Closed
N-2	Basement, north (ceiling)	Allows north facility to be drained to the process drain	L and T	Closed
N-3	Basement, north (ceiling)	Allows north facility to be drained to the process drain	L and T	Closed

Table 6.5. (continued)

Valve identification	Location	Function	L (locked) and/or T (tagged)	Normal condition
302-A	Subpile room	Supplies a flow of reactor water to the shim-rod-drive shock absorbers, wipers, and bottom plug annulus (Originally permitted draining of north and south facilities.)	L and T	Open
110-E (24-in. valve)	Sump No. 1 (primary pump house)	Controls all reactor-primary-water flow	L and T	Open
HTC-SR	Basement, north facility pump	Allows reactor water to be used in the hydraulic-tube system (supply)	T	Closed
HTC-OR	Pipe tunnel	Allows reactor water to be used in the hydraulic-tube system (return)	T	Closed
HT1-3	Basement, west	Supplies reactor water to the No. 1 hydraulic-tube system (The No. 1 hydraulic-tube system was removed from service in November 1969.)	L and T	Closed
HT2-3	Basement, west	Supplies reactor water to the No. 2 hydraulic-tube system (The No. 2 hydraulic-tube core piece was removed from service July 1980.)	L and T	Closed
N-15	Pipe tunnel	Supplies acid to the reactor north-cation demineralizer	L and T	Closed
D-9	Pipe tunnel	Supplies acid to the reactor degasifier demineralizer cation column	L and T	Closed

Table 6.5. (continued)

Valve identification	Location	Function	L (locked) and/or T (tagged)	Normal condition
N-23	Pipe tunnel	Supplies caustic to the reactor north anion demineralizer	L and T	Closed
S-15	Pipe tunnel	Supplies acid to the reactor south cation demineralizer	L and T	Closed
D-9	Pipe tunnel	Allows acid in line 408 to be drained to the hot drain	L and T	Closed
D-17	Pipe tunnel	Supplies caustic to the reactor degasifier demineralizer (3-way valve) anion column	L and T	Closed
S-23	Pipe tunnel	Supplies caustic to the reactor south anion demineralizer	L and T	Closed
401-A	Outside diesel room	Supplies process water to the reactor tank	T	Closed
1	Degasifier cubicle	Bypasses the automatic control valve	T	Closed
160-A	No. 1 pump cell	Controls inlet to the No. 1 primary pump	T	Open
161-B	No. 1 pump cell	Controls exit of the No. 1 primary pump	T	Open
158-A	No. 2 pump cell	Controls inlet to the No. 2 primary pump	T	Open
158-B	No. 2 pump cell	Controls exit of the No. 2 primary pump	T	Open

Table 6.5. (continued)

Valve identification	Location	Function	L (locked) and/or T (tagged)	Normal condition
147-A	No. 3 pump cell	Controls inlet to the No. 3 primary pump	T	Open
148-B	No. 3 pump cell	Controls exit of the No. 3 primary pump	T	Open
121-A	Heat-exchanger pit	Controls inlet to the No. 1 heat exchanger	T	Open
125-A	Heat-exchanger pit	Controls exit of the No. 1 heat exchanger	T	Open
122-A	Heat-exchanger pit	Controls inlet to the No. 2 heat exchanger	T	Open
126-A	Heat-exchanger pit	Controls exit of the No. 2 heat exchanger	T	Open
123-A	Heat-exchanger pit	Controls inlet to the No. 3 heat exchanger	T	Open
127-A	Heat-exchanger pit	Controls exit of the No. 3 heat exchanger	T	Open
124-A	Heat-exchanger pit	Controls inlet to the No. 4 heat exchanger	T	Open
128-A	Heat-exchanger pit	Controls exit of the No. 4 heat exchanger	T	Open

Table 6.5. (continued)

Valve identification	Location	Function	L (locked) and/or T (tagged)	Normal condition
301-A	Basement	Controls inlet to the north-facility pump	T	Open
302-B	Basement	Controls exit of the north-facility pump	T	Open
304-A	Basement	Controls inlet to the south-facility pump	T	Open
305-B	Basement	Controls exit of the south-facility pump	T	Open
TCV-11	Sump No. 7	Bypass control valve for the primary water system	L and T	Variable

Table 6.6. Valves on the ORR reactor secondary water system locked and/or tagged

Valve identification	Location	Function	L (locked) and/or T (tagged)	Normal condition
801-A	Heat-exchanger pit	Controls inlet to the No. 1 heat exchanger	T	Open
811-A	Heat-exchanger pit	Controls exit of the No. 1 heat exchanger	T	Open
802-A	Heat-exchanger pit	Controls inlet to the No. 2 heat exchanger	T	Open
812-A	Heat-exchanger pit	Controls exit of the No. 2 heat exchanger	T	Open
803-A	Heat-exchanger pit	Controls inlet to the No. 3 heat exchanger	T	Open
813-A	Heat-exchanger pit	Controls exit of the No. 3 heat exchanger	T	Open
804-A	Heat-exchanger pit	Controls inlet to the No. 4 heat exchanger	T	Open
814-A	Heat-exchanger pit	Controls exit of the No. 4 heat exchanger	T	Open
817-B	Secondary pump house	Controls inlet to the No. 1 secondary pump	T	Open
817-C	Secondary pump house	Controls exit of the No. 1 secondary pump	T	Open
818-B	Secondary pump house	Controls inlet to the No. 2 secondary pump	T	Open
818-C	Secondary pump house	Controls exit of the No. 2 secondary pump	T	Open
819-B	Secondary pump house	Controls inlet to the No. 3 secondary pump	T	Open
819-C	Secondary pump house	Controls exit of the No. 3 secondary pump	T	Open
TCV-47	Secondary pump house	Bypass control valve for the reactor secondary water system	T	Variable

Table 6.7. Valves on the ORR pool primary water system locked and/or tagged

Valve identification	Location	Function	L (locked) and/or T (tagged)	Normal condition
409-C	Basement, west	Supplies demineralized water from Building 3004	T	Open
409-E	Basement, west	Supplies demineralized water to the rod-drive "O"-ring seals	T	Open
410-A	North balcony	Supplies make-up demineralized water to reactor pool	T	Closed
411-A	North balcony	Supplies make-up demineralized water to center pool	T	Closed
409-D	North balcony	Supplies make-up demineralized water to west pool	T	Closed
447-A	Above reservoir tank	Automatic block valve which allows demineralized water to enter reservoir tank	T	Open
447-B	Above reservoir tank	Automatic block valve which allows demineralized water to enter reservoir tank	T	Open
456-A	Above reservoir tank	Automatic block valve bypass which allows demineralized water to enter reservoir tank through bypass line	T	Open
203-B	Basement, west	Main block valve which supplies pool water to beam-hole facility	L and T	Open
201-C	Basement, west	Main block valve which permits return of pool water from beam-hole facilities	L and T	Open

Table 6.7. (continued)

Valve identification	Location	Function	L (locked) and/or T (tagged)	Normal condition
HB-1 plug supply	Basement, catwalk	Supplies pool cooling water to HB-1 plug	L and T	Variable
HB-2 plug supply	Basement, catwalk	Supplies pool cooling water to HB-2 plug	L and T	Variable
HB-3 plug supply	Basement, catwalk	Supplies pool cooling water to HB-3 plug	L and T	Variable
HB-4 plug supply	Basement, catwalk	Supplies pool cooling water to HB-4 plug	L and T	Variable
HB-5 plug supply	Basement, catwalk	Supplies pool cooling water to HB-5 plug	L and T	Variable
HB-6 plug supply	Basement, catwalk	Supplies pool cooling water to HB-6 plug	L and T	Variable
HB-1 plug return	Basement, catwalk	Permits return of pool water from HB-1 plug	L and T	Variable
HB-2 plug return	Basement, catwalk	Permits return of pool water from HB-2 plug	L and T	Variable
HB-3 plug return	Basement, catwalk	Permits return of pool water from HB-3 plug	L and T	Variable

Table 6.7. (continued)

Valve identification	Location	Function	L (locked) and/or T (tagged)	Normal condition
HB-4 plug return	Basement, catwalk	Permits return of pool water from HB-4 plug	L and T	Variable
HB-5 plug return	Basement, catwalk	Permits return of pool water from HB-5 plug	L and T	Variable
HB-6 plug return	Basement, catwalk	Permits return of pool water from HB-6 plug	L and T	Variable
HB-1 plug drain	Basement, catwalk	Permits draining of HB-1 plug to process drain	L and T	Closed
HB-2 plug drain	Basement, catwalk	Permits draining of HB-2 plug to process drain	L and T	Closed
HB-3 plug drain	Basement, catwalk	Permits draining of HB-3 plug to process drain	L and T	Closed
HB-4 plug drain	Basement, catwalk	Permits draining of HB-4 plug to process drain	L and T	Closed
HB-5 plug drain	Basement, catwalk	Permits draining of HB-5 plug to process drain	L and T	Closed
HB-6 plug drain	Basement, catwalk	Permits draining of HB-6 plug to process drain	L and T	Closed

Table 6.7. (continued)

Valve identification	Location	Function	L (locked) and/or T (tagged)	Normal condition
HB-1 liner drain	Basement, catwalk	Permits draining of HB-1 liner to process drain	L and T	Closed
HB-2 liner drain	Basement, catwalk	Permits draining of HB-2 liner to process drain	L and T	Closed
HB-3 liner drain	Basement, catwalk	Permits draining of HB-3 liner to process drain	L and T	Closed
HB-4 liner drain	Basement, catwalk	Permits draining of HB-4 liner to process drain	L and T	Closed
HB-5 liner drain	Basement, catwalk	Permits draining of HB-5 liner to process drain	L and T	Closed
HB-6 liner drain	Basement, catwalk	Permits draining of HB-6 liner to process drain	L and T	Closed
HB-1 magnet cooling water	Basement, catwalk	Opening valve may overpressurize HB-1 liner	L and T	Closed
HB-1 pump off-gas	Basement, catwalk	Controls off-gas from HB-1 pump	T	Open
HT1-1	Poolside, north	Supplies pool water to hydraulic-tube sample system No. 1 (The No. 1 hydraulic-tube system was removed from service November 1969.)	L and T	Closed
HT2-1	Poolside, north	Supplies pool water to hydraulic-tube sample system No. 2 (The No. 2 hydraulic-tube core piece was removed from service July 1980.)	L and T	Closed

Table 6.7. (continued)

Valve identification	Location	Function	L (locked) and/or T (tagged)	Normal condition
P-9	Basement, west	Supplies acid to pool cation demineralizer column	L and T	Closed
P-12	Basement, west	Supplies caustic to pool anion demineralizer column	L and T	Closed
HT1-2	Basement, west	Supplies pool water to No. 1 hydraulic-tube sample system (The No. 1 hydraulic-tube system was removed from service November 1969.)	L and T	Closed
HT2-2	Basement, west	Supplies pool water to No. 2 hydraulic-tube sample system (The No. 2 hydraulic-tube core piece was removed from service July 1980.)	L and T	Closed
HN-1 and 4 water supply	Basement, catwalk	Supplies water to both HN-1 and HN-4 plugs	L and T	Variable
HN-1 and 4 water return	Basement, catwalk	Permits return of water from HN-1 and HN-4 plugs	L and T	Variable
HN-1 and 4 helium	Basement, catwalk	Supplies helium to HN-1 and HN-4 plugs	T	Variable
HN-1 and 4 air	Basement, catwalk	Supplies air to HN-1 and HN-4 plugs	T	Variable
HN-1 and 4 off-gas	Basement, catwalk	Allows HN-1 and HN-4 plugs to be connected to off-gas system	T	Variable

Table 6.7. (continued)

Valve identification	Location	Function	L (locked) and/or T (tagged)	Normal condition
4	First level, north	Controls inlet water flow to HN-1 plug	L and T	Variable
7	First level, north	Controls exit water flow to HN-1 plug	L and T	Variable
4	First level, north	Controls inlet water flow to HN-4 plug	L and T	Variable
7	First level, north	Controls exit water flow to HN-4 plug	L and T	Variable
201a	Basement	Controls inlet to pool circulating pump	T	Open
202b	Basement	Controls exit of pool circulating pump	T	Open
202d	Basement	Controls exit to pool circulating pump	T	Open
202e	Basement	Controls inlet of pool circulating pump to the heat exchanger	T	Open
203a	Basement	Controls exit of pool circulating pump from the heat exchanger	T	Open

Table 6.8. Valves on the ORR containment system locked and/or tagged

Valve identification	Location	Function	L (locked) and/or T (tagged)	Normal condition
CV-1S	3042 stack area	Controls steam supply to operate cell-ventilation auxiliary blower	L and T	Open
CV-2S	3042 stack area	Controls steam supply to operate cell-ventilation auxiliary blower	L and T	Open
CV-3S	3042 stack area	Controls steam supply to operate cell-ventilation auxiliary blower	L and T	Open
CV-4S	3042 stack area	Controls steam supply to operate cell-ventilation auxiliary blower	L and T	Open
CV chain valve	3042 stack area	Controls steam supply to operate cell-ventilation auxiliary blower	T	Open
Inlet damper 22-E	3042 stack area	Controls steam supply to operate cell-electric blower	L and T	Open
Inlet damper 22-S	3042 stack area	Controls steam supply to operate cell-auxiliary steam blower	L and T	Open
25-A	Cell-ventilation filter pit (3106)	Controls inlet flow to cell-ventilation filter bank	T	Open
25-B	Cell-ventilation filter pit (3106)	Controls exit flow from cell-ventilation filter bank	T	Open

Table 6.8. (continued)

Valve identification	Location	Function	L (locked) and/or T (tagged)	Normal condition
Electrometer, inlet	Cell-ventilation filter pit (3106)	Controls inlet flow to local cell-ventilation electrometer	L and T	Open
Electrometer, exit	Cell-ventilation filter pit (3106)	Controls exit flow from cell-ventilation electrometer	L and T	Open
CV-P6	Seal-tank pit	Controls water flow to cell-ventilation seal tank	T	Open
CV-P1	Seal-tank pit	Controls water flow to cell-ventilation seal tank	T	Open
CV-P2	Seal-tank pit	Controls water flow to cell-ventilation seal tank	T	Open
CV-P3	Seal-tank pit	Controls water flow to cell-ventilation seal tank	T	Open
CV-P4	Seal-tank pit	Controls water flow to cell-ventilation seal tank	T	Open
CV-P5	Seal-tank pit	Controls water flow to cell-ventilation seal tank (bypasses automatically controlled valves)	T	Closed
R-4	Basement, south	Controls air flow from ORR building to cell-ventilation ducts	L and T	Open

Table 6.8. (continued)

Valve identification	Location	Function	L (locked) and/or T (tagged)	Normal condition
R-5	Basement, south	Controls air flow from ORR building to cell-ventilation ducts	L and T	Open
CV-BS1	Basement, south	Controls air flow from Loop 2 cubicle to cell-ventilation ducts	L and T	Open
CV-BS2	Basement, south	Controls air flow from PWL equipment room to cell-ventilation ducts	L and T	Open
CV-BS3	Basement, south	Connects pipe chase to cell-ventilation ducts	T	Open
POG-10	Above Building 3089	Connects cell-ventilation system to POG blower	L and T	Closed
POG-11	Stack area	Controls discharge of POG blower	L and T	Open
POG-13	Stack area	Allows POG to go to auxiliary blower	L and T	Closed
NOG 34	NOG line east of Building 3089	Main block valve on NOG system	L and T	Open
SH-8	Second level, west	Hot cell off-gas block valve	T	Open
SH-8A, T-handle	Second level, west	Hot cell off-gas block valve	T	Open
ST-1B	South balcony	Controls gas flow in NOG line serving valve boxes	T	Open
ST-5B	South balcony	Controls inlet flow to NOG check valve	T	Closed
ST-2B	South balcony	Controls exit flow from NOG check valve	T	Closed

Table 6.9. Electrical equipment at the ORR complex locked and/or tagged

Equipment identification	Location	Function	L (locked) and/or T (tagged)	Normal condition
No. 2 roof exhaust fan switch, 3 phase, 440 V	First level, south	Controls roof exhaust fan No. 2*	L and T	De-energized
No. 3 roof exhaust fan switch, 3 phase, 440 V	First level, south	Controls roof exhaust fan No. 3*	L and T	De-energized
No. 5 roof exhaust fan switch, 3 phase, 440 V	First level, south	Controls roof exhaust fan No. 4*	L and T	De-energized
No. 4 roof exhaust fan switch, 3 phase, 440 V	First level, south	Controls roof exhaust fan No. 5*	L and T	De-energized
ES-124	Electrical blower, cell-ventilation system (stack area)	Maintains negative pressure on building	T	Energized
Diesel switch box	Diesel room	Ensures automatic resumption of electrical power to critical reactor components if TVA power is lost	L and T	In "auto" mode
Switch box	POG blower	Supplies power to POG blower	T	Energized

*Exhaust fans 2, 3, 4, and 5 are no longer in service because operation of these units subjects the building to excessive vacuum.

Table 6.10. Valves on the ORR air supply lines locked and/or tagged

Valve identification	Location	Function	L (locked) and/or T (tagged)	Normal condition
ASV-CR1	Control room, north	Controls main air supply to ORR pneumatic instrumentation on control-room graphic panel	T	Open
ASV-CR2	Control room, north	Controls air supply to ORR pneumatic instrumentation on control-room graphic panel	T	Open
ASV-CR3	Control room, north	Controls air supply to ORR pneumatic instrumentation on control-room graphic panel	T	Open
ASV-CR4	Control room, north	Bypass for air line filter	T	Closed
ASV-CR5	Control room, north	Controls air supply to pneumatic instrumentation on control-room graphic panel	T	Open
ASV-CR6	Control room, north	Controls air supply to pneumatic instrumentation on control-room graphic panel	T	Open
ASV-CR7	Control room, north	Regulates air supply to pneumatic instrumentation on control-room graphic panel	T	Set at 22 psig
ASV-CR8	Control room, north	Controls air supply to POG ΔP cell	T	Open
ASV-BA1	North balcony	Regulates air supply to POG and NOG ΔP cells	T	Set

6.10. (continued)

Valve identification	Location	Function	L (locked) and/or T (tagged)	Normal condition
ASV-BA2	North balcony	Controls air supply to POG and NOG ΔP cells	T	Open
ASV-BS1	Basement, west	Controls air supply to pneumatic instrumentation for pool cooling system (bypass valve)	T	Closed
ASV-BS2	Basement, west	Controls air supply to pneumatic instrumentation for pool cooling system	T	Open
ASV-BS3	Basement, west	Controls air supply to pneumatic instrumentation for pool cooling system	T	Open
ASV-BS4	Basement, west	Controls air supply to pneumatic instrumentation for pool cooling system	T	Open
ASV-BS5	Basement, west	Controls air supply to pneumatic instrumentation for pool cooling system	T	Open
ASV-BS6	Basement, west	Regulates air supply to pneumatic instrumentation	T	Set
ASV-BS7	Basement, south	Controls air supply to pneumatic instrumentation for facility flow, NOG, and reactor ΔT	T	Open
ASV-BS8	Basement, south	Controls air supply to pneumatic instrumentation for facility flow, NOG, and reactor ΔT	T	Open

6.10. (continued)

Valve identification	Location	Function	L (locked) and/or T (tagged)	Normal condition
ASV-BS9	Basement, south	Instrument air supply bleed valve	T	Closed
ASV-BS10	Basement, south	Controls air supply to pneumatic instrumentation	T	Open
ASV-BS11	Basement, north	Controls air supply to pneumatic instrumentation for facility cooling	T	Open
ASV-BS12	Basement, north	Controls air supply to pneumatic instrumentation for facility cooling	T	Open
ASV-BS13	Basement, north (ceiling)	Controls air supply to pneumatic instrumentation for facility cooling	T	Open
ASV-FP1	POG filter pit	Controls air supply to POG ΔP cell	T	Open
ASV-FP2	POG filter pit	Regulates air supply to POG ΔP cell	T	Set
ASV-PHA1	Pump house annex	Controls air supply to ΔP cell for primary water flow	T	Open
ASV-PHA2	Pump house annex	Controls air supply to ΔP cell for primary water flow	T	Open
ASV-PHA3	Pump house annex	Controls air supply to ΔP cell for primary water flow	T	Open
ASV-PHA4	Pump house annex	Controls air supply to reactor bypass valve	T	Open

6.10. (continued)

Valve identification	Location	Function	L (locked) and/or T (tagged)	Normal condition
ASV-RS1	Reactor secondary pump house	Controls air supply to instrument panel	T	Open
ASV-RS2	Reactor secondary pump house	Controls air supply to instrument panel	T	Open
ASV-RS3	Reactor secondary pump house	Controls air supply to instrument panel for water-temperature-control system	T	Open
ASV-RS4	Reactor secondary pump house	Controls air supply to instrument panel for water-temperature-control system	T	Open
ASV-RS5	Reactor secondary pump house	Controls air supply to instrument panel for water-temperature-control system (a bypass valve)	T	Closed
ASV-RS6	Reactor secondary pump house	Controls air supply to pneumatic instrumentation for secondary cooling system (ΔP cell, inlet-water temperature to heat exchangers)	T	Open
ASV-RS7	Reactor secondary pump house	Controls air supply to pneumatic instrumentation for secondary cooling system (ΔP cell, inlet-water temperature to heat exchangers)	T	Open
ASV-RS8	Reactor secondary pump house	Controls air supply to pneumatic instrumentation for secondary cooling system (ΔP cell, inlet-water temperature to heat exchangers)	T	Closed

6.10. (continued)

Valve identification	Location	Function	L (locked) and/or T (tagged)	Normal condition
ASV-RS9	Reactor secondary pump house	Controls air supply to pneumatic instrumentation for secondary cooling system (ΔP cell, exit-water temperature to heat exchangers)	T	Open
ASV-RS10	Reactor secondary pump house	Controls air supply to pneumatic instrumentation for secondary cooling system (ΔP cell, exit-water temperature to heat exchangers)	T	Open
ASV-RS11	Reactor secondary pump house	Regulates air supply to pneumatic instrumentation for secondary cooling system (ΔP cell, outlet temperature)	T	Set at 22 psig
ASV-RS12	West side of reactor secondary pump house	Regulates air supply to pneumatic instrumentation for secondary control system (ΔP cell, outlet temperature)	T	Set at 22 psig
ASV-BS14	Above hot lab.	Controls main air supply to Building 3042	T	Open
ASV-BS15	Above hot lab.	Controls main air supply to Building 3042	T	Open
ASV-BS16	Above hot lab.	Controls main air supply to Building 3042	T	Open
ASV-BS17	Above Loop 1 control room	Controls main air supply to pneumatic instrumentation located in pump house and reactor cooling tower	T	Open

Table 6.11. Valves on ORR experimenters' equipment locked and/or tagged

Valve identification	Location	Function	L (locked) and/or T (tagged)	Normal condition
HV-739	Loop 2 equipment room, basement	Permits draining of south facility	L and T	Closed
HV-740	Loop 2 equipment room, basement	Permits draining of south facility	L and T	Closed
HV-759	Loop 2 equipment room, basement	Permits draining of south facility	L and T	Closed
HV-760	Loop 2 equipment room, basement	Permits draining of south facility	L and T	Closed
MQC-711*	Loop 2 cell, first level, south	Provides quick-disconnect in pressure piping for cooling annulus and cold finger (supply)	L and T	Connected
MQC-712*	Loop 2 cell, first level, south	Provides quick-disconnect in coolant line between cold finger and pressure-piping annulus	L and T	Connected
MQC-713*	Loop 2 cell, first level, south	Provides quick-disconnect in coolant line between cold finger and pressure-piping annulus	L and T	Connected
MQC-714*	Loop 2 cell, first level, south	Provides quick-disconnect in coolant line between cold finger and pressure-piping annulus	L and T	Connected

Quick-disconnects are locked with a special pin provided with their actuating mechanism.

Table 6.11. (continued)

Valve identification	Location	Function	L (locked) and/or T (tagged)	Normal condition
MQC-720*	Loop 2 cell, first level, south	Provides quick-disconnect in 18 1/2-in.-cavity coolant supply line	L and T	Disconnected
HV-730	First level, south outside east wall of Loop 2 cell	Block valve in coolant supply line to south facility 5-ft plug	L and T	Throttled
HV-750	First level, south, outside east wall of Loop 2 cell	Block valve in coolant supply line to south facility 24-in. annulus	L and T	Open
HV-751	Inside Loop 2 cell, first level, south	Throttle valve in coolant supply line to south facility 24-in. annulus	L and T	Throttled
HV-758	Inside Loop 2 cell, first level, south	Block valve in 18 1/2-in.-cavity drain	T	Closed
HV-781	Inside Loop 2 cell, first level, south	Throttle valve in pressure piping annulus and cold-finger coolant supply line	L and T	Throttled
HV(M)-782**	Inside Loop 2 cell, first level, south	Block valve in coolant supply line	T	Open
HV(M)-785**	Inside Loop 2 cell, first level, wouth	Block valve in pressure-piping annulus and cold-finger coolant return line	L and T	Open

*Quick-disconnects are locked with a special pin provided with their actuating mechanism.
**Manipulator-operated valves are locked by removing their extension handles.

Table 6.11. (continued)

Valve identification	Location	Function	L (locked) and/or T (tagged)	Normal condition
HV-788	Inside Loop 2 cell, first level, south	Throttle valve in beryllium-coolant supply line	L and T	Throttled
HV(M)-789*	Inside Loop 2 cell, first level, south	Block valve in beryllium-coolant supply line	L and T	Open
HV(M)-792*	Inside Loop 2 cell, first level, south	Block valve in beryllium-coolant return line	L and T	Open
HCV-794**	Inside Loop 2 cell, first level, south	Block valve in 18 1/2-in.-cavity coolant supply line	L and T	Closed
HCV-795**	Inside Loop 2 cell, first level, south	Block valve in 18 1/2-in.-cavity coolant return line	L and T	Closed
HV-797	Inside Loop 2 cell, first level, south	Block valve in connecting line between 18 1/2-in.-cavity coolant supply line and 18 1/2-in.-cavity drain	L and T	Closed
HV-7001	Inside Loop 2 cell, first level, south	Block valve in combined coolant return line	L and T	Open
HV-798	Inside Loop 2 cell, first level, south	Block valve in 24-in. annulus drain ling	L and T	Closed
HV-7000	Inside Loop 2 cell, first level, south	Block valve in beryllium and cold-finger coolant supply line	L and T	Open

*Manipulator-operated valves are locked by removing their extension handles.

**Motor-operated valves are locked by de-energizing their electrical circuits.

Table 6.11. (continued)

Valve identification	Location	Function	L (locked) and/or T (tagged)	Normal condition
HV-442B	Loop 2, basement equipment room	Block valve between POG and cell vacuum pumps	L and T	Closed
HV-443	Loop 2, basement equipment room	Block valve between POG and cell vacuum pumps	L and T	Closed
HV-441B	Loop 2, basement equipment room	Block valve between POG and cell vacuum pumps	L and T	Closed
HV-414B	Loop 2, basement equipment room	Block valve between POG and cell vacuum pumps	L and T	Closed
HV-413B	Loop 2, basement equipment room	Block valve between POG and cell vacuum pumps	L and T	Closed
HV-412	Loop 2, basement equipment room	Block valve between POG and Loop 2 cell	L and T	Closed
HV-334	Loop 2 control room	Block valve between Loop 2 fill-tank bypass and POG	L and T	Open
HV-425	Loop 2 cell roof	Block valve between cell and NOG	L and T	Open
HV(M)-770	Inside Loop 2 cell	Block valve between 18-in. annulus and NOG	T	Open
HV-609	Basement, south	Block valves between various loop components and ILW drain (prevents backup from hot drain)	L and T	Closed

Table 6.11. (continued)

Valve identification	Location	Function	L (locked) and/or T (tagged)	Normal condition
HV-670	Basement, south	Block valves between various loop components and ILW drain (prevents backup from ILW drain)	L and T	Closed
HV-671	Basement, south	Block valves between various loop components and ILW drain (prevents backup from ILW drain)	L and T	Closed
HV-682	Basement, south	Block valves between various loop components and ILW drain (prevents backup from ILW drain)	L and T	Closed
HV-683	Basement, south	Block valves between various loop components and ILW drain (prevents backup from ILW drain)	L and T	Closed
HV-362	PWL cubicle	Controls water supply to vacuum jacket (Water may be flashed to steam if valve is opened.)	T	Closed
909	Basement, north	Provides overflow for Loop 1 surge tank	T	Open
PWL standpipe cooler 709	North balcony	Block valve on PWL cooling water system for standpipe cooler	T	Closed
HV-600A	North balcony	Block valve on PWL cooling water system	T	Closed
HV-600B	North balcony	Block valve on PWL cooling water system	T	Closed

Table 6.11. (continued)

Valve identification	Location	Function	L (locked) and/or T (tagged)	Normal condition
Loop 1 emergency cooling	South balcony	Provides emergency cooling for Loop 1 cold finger	T	Closed
906	North balcony	Controls Loop 1 cell off-gas	T	Open

6.2.10. Use of Mercury in the ORR Building

1. Introduction

The use of mercury around aluminum systems (in particular, nuclear reactor systems of aluminum construction) should be avoided due to the rapid, severe corrosion of aluminum caused by the presence of mercury or mercury compounds. Consequently, rules limiting the use of mercury in the ORR building have been in effect since initial operation of the reactor in 1958. All personnel doors in the ORR building are posted with "mercury prohibited" signs.

Exceptions to the "mercury prohibited" rule have been permitted but only under regulated conditions. Requests for deviations are reviewed by the Reactor Supervisor and, if the request is granted, a procedure for handling is developed. For example, a request to permit the use of a mercury diffusion pump in the operation of a ^{6}He recoil experiment was received, reviewed, and approved. This experiment has been completed and the components containing mercury removed from the building. In other isolated cases, permission has been granted to use mercury switches housed in mechanical containment for components in experiment instrument control circuits. All requests are evaluated on an individual basis. The use of mercury in instruments has become so widespread that it is difficult to make sure that none is brought into the building. For example, the PRM (personal radiation monitor) carried by many of the people at ORNL contains mercury batteries.

Experience to date indicates that the control of mercury in the ORR building has been satisfactory and that none has been released into the water system.

2. Procedure

Requests for the use of mercury or mercury-containing components in the ORR should be directed to the Reactor Supervisor. Evaluation will be made and, if approved, special handling procedures will be developed. The use of PRMs in and around the ORR pool will continue

as in the past, i.e., controlled entry into the pool by a member of the Operations Division will follow standard procedures and the disposal of the PRM's mercury batteries will be in accordance with existing policies.

6.2.11. Underwater Periscope

1. Introduction

The underwater periscope is an optical instrument used for the remote viewing of submerged objects. At the reactor facilities, the periscope has become a useful tool for the detailed inspection of highly radioactive items that must remain shielded by water.

2. Description

The periscope kit consists of several items which are pictured in Figs. 6.8, 6.9, and 6.10 and are described as follows:

a. A viewing section. This section permits the viewer to focus the instrument. An eye hook is mounted on the top side of this piece to allow the periscope to be suspended from an overhead crane.

b. A 15-ft tubular section. This section is the "middle piece" of the periscope. Located at the top section is a valve to allow pressurization of the periscope. (The valve is similar to those on automobile tires.)

c. Four 4-ft extension tubes. Each extension tube used in the assembly extends the minimum permissible distance between the viewing level and object level approximately 55 in. (The minimum distances that can be obtained, allowing for focus, are 15 ft; 19 ft, 8 in.; 24 ft, 5 in.; 29 ft, 1 in.; and 33 ft, 9 in.

d. Three viewing heads. These attachments are as follows:

(1) An omniscope. This piece is used for wide-angle (140°) viewing; the optics do not magnify the object. (NOTE: Substract 6 in. from the distance listed in item 3 when using this head, since the 6-in. captive coupling is not used for wide-angle viewing.)

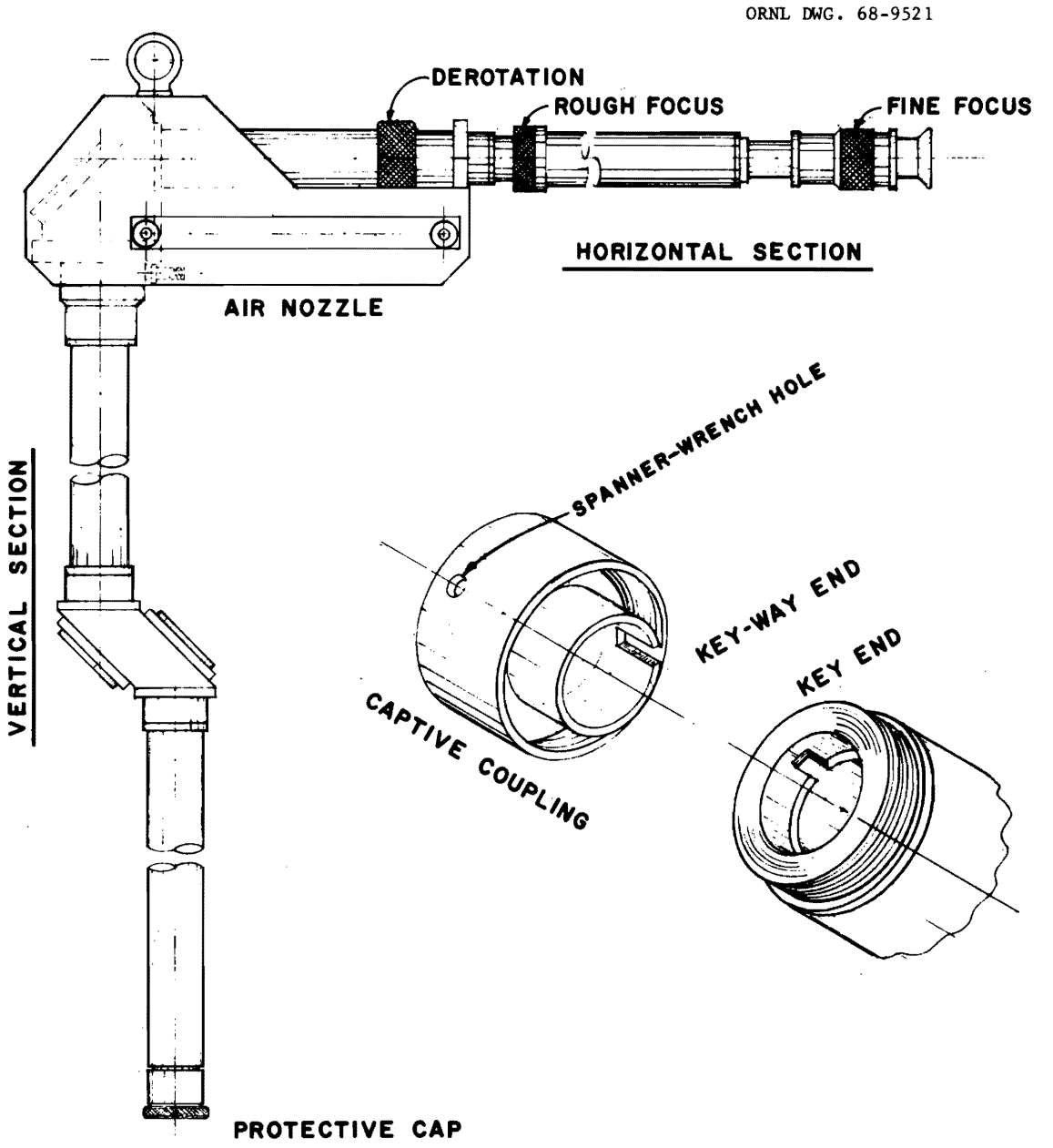

Fig. 6.8. Underwater periscope.

ORNL DWG. 68-9522

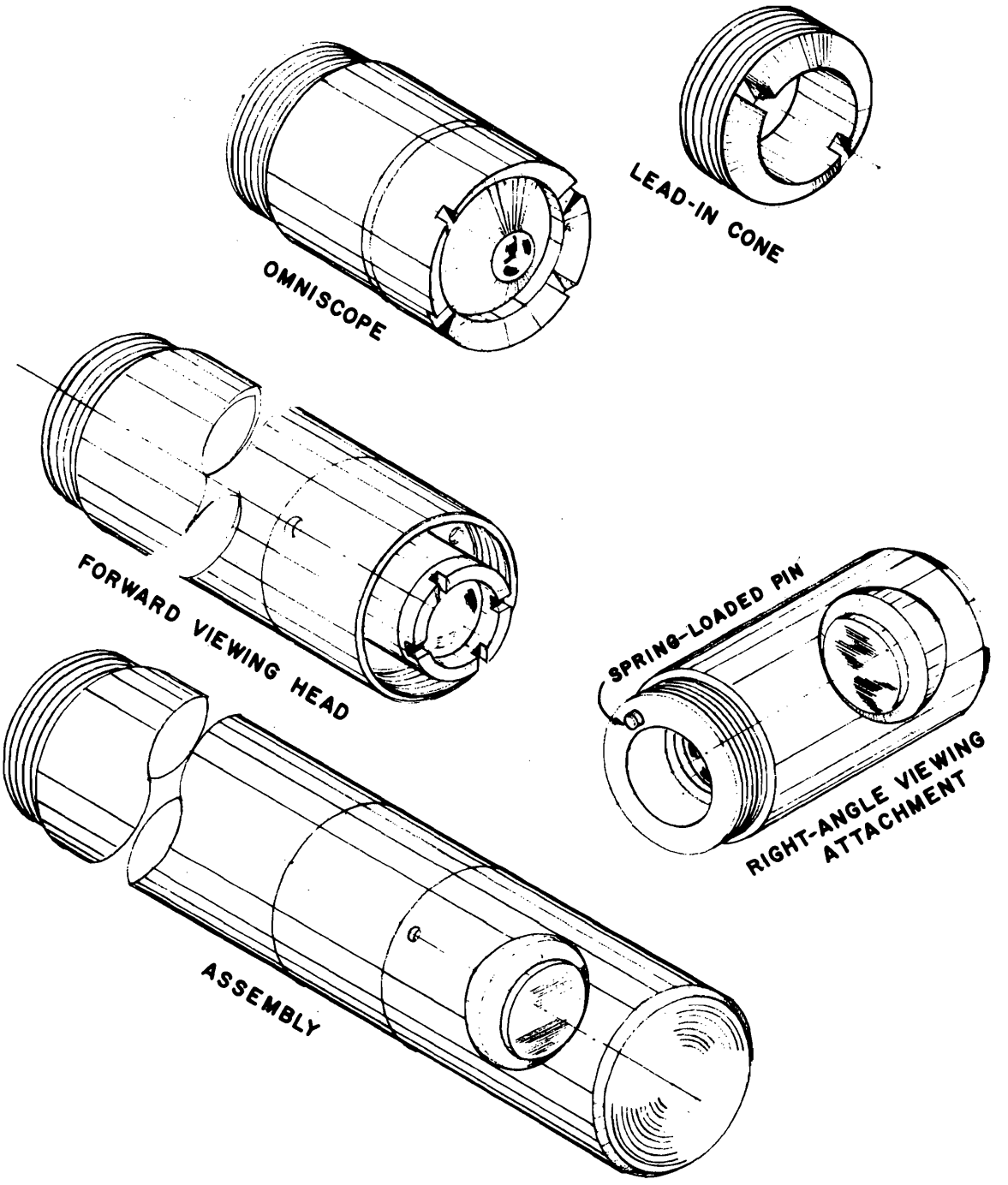

Fig. 6.9. Objectives.

ORNL DWG. 68-9523

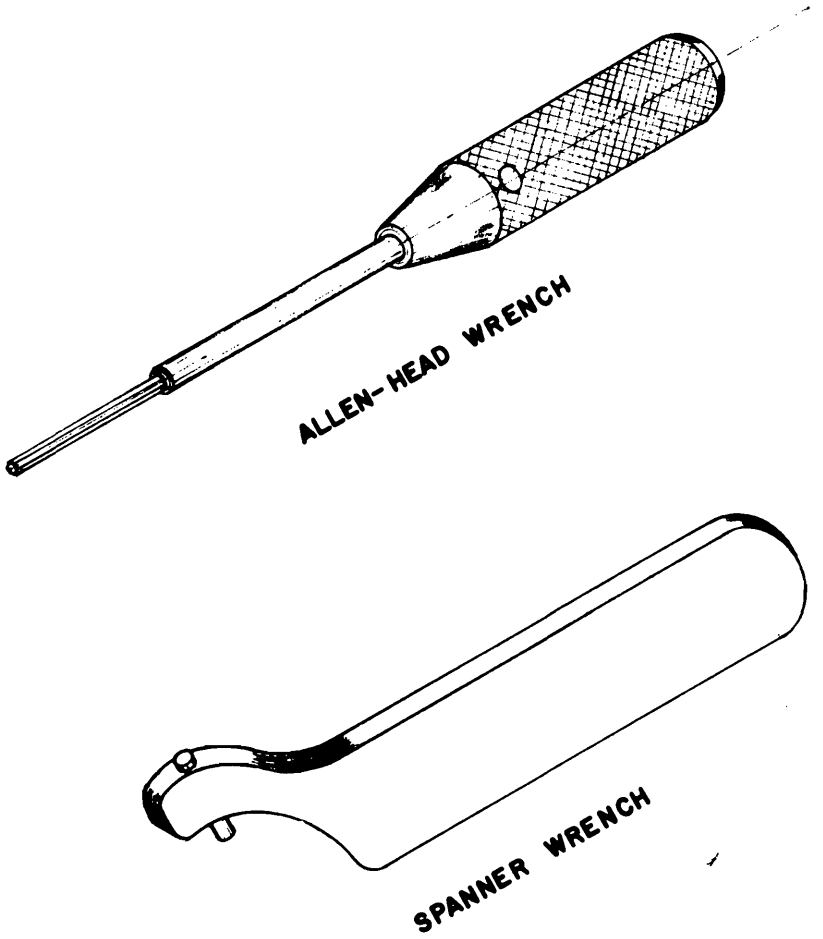

Fig. 6.10. Tools.

(2) A forward viewing, 4X objective. This piece will allow the viewer to observe the top side of the object (field of vision is straight down when periscope is suspended in vertical position); the optics will magnify the object by four times. (NOTE: The 6-in. captive coupling precedes this piece in the assembly.)

e. A 6-in. captive coupling. This piece is attached to the 15-ft tubular section directly when either of the two magnifying heads is used.

f. An allen-head wrench. This is to be used to attach the viewing piece to the 15-ft tubular section.

g. A spanner wrench. This is used to secure the various tubular pieces to each other (viewing heads, extension tubes, etc.).

h. An attachment to allow pressurization of the 15-ft tubular section. This attachment is simular to those used at a service station to pressurize automobile tires.

All these pieces are stored in two instrument boxes.

3. Assembly procedures

a. Prepare a working area. This should consist mainly of placing a 20-ft section of blotting paper on a cleared area of the floor where the instrument is to be assembled.

b. Remove the viewing piece and the 15-ft tubular piece to the working area. (PRECAUTION: Two individuals should remove the 15-ft section to facilitate a safe transfer. Do not allow this section to "sag" in the middle.)

c. Remove the three allen-head screws securing the black-colored caps on the viewing piece and on the 15-ft tubular piece.

d. Attach the viewing piece to the tubular piece using the five allen-head screws provided. (Align the pressurizing valve facing the eyepiece.)

e. Attach the 6-in. captive coupling section to the bottom end of the 15-ft section. (PRECAUTION: Carefully match the keys in the keyways when connecting the viewing heads, extension, tubes, etc., to the periscope. Use the spanner wrench to provide the proper torque for a tight seal around the rubber O-rings.)

f. Attach either of the two magnifying viewing heads to the 6-in. captive coupling. (NOTE: If the wide-angle viewing head is to be used, the captive coupling is omitted from the assembly. If a 4-ft extension is needed, it should be attached directly to the 15-ft section, preceding the 6-in. captive coupling.)

g. Pressurize the periscope with dry nitrogen. To prevent water from leaking into the periscope and subsequently distorting the optical characteristics, the periscope should be pressurized to a value slightly in excess of the maximum hydrostatic head to be expected. In general, pressurize to an additional 1 psig for each 2 ft the viewing head will be submerged. (PRECAUTION: The pressure should be increased slowly, in increments; and the final pressure should be rechecked after about 10 min.)

4. Procedure for transferring the periscope to the pool

a. Secure a rope through the eye hook on the viewing section and prepare a loop to attach to the small crane. Allow about 3 ft of rope to separate the crane from the periscope so that the crane does not present any obstacle problems to the viewer.

b. Raise the crane very slowly to take the slack out of the rope. When the viewing section of the periscope is raised slightly off the floor, and until the periscope is suspended completely from the rope, two individuals should support the 15-ft tubular section in such a manner as to prevent any possible sagging or bowing of the center section.

c. Transfer the periscope to the pool. Do not allow unnecessary "swinging around" of the viewing head while the periscope is hanging from the crane. As the viewing head is being submerged, be certain that it does not strike any other objects in the pool.

5. Focusing procedure

a. Rotate the knurled eyepiece barrel until the eyepiece is roughly in the middle of its fine-focusing travel.

b. Loosen the knurled locking ring outside the off-set bridge structure. Slide the eyepiece tube back and forth until the image comes into approximate focus and then tighten the locking ring.

c. The image may be reversed or tilted, depending on the number of extensions used and on the orientation of the right-angle viewing attachment. The orientation of the image can be changed by rotating the knurled ring located inside the off-set bridge structure (ring farthest from eyepiece).

NOTE: A camera adapter from a 4 x 5 Grayflex camera is furnished with the periscope if photographs are desired. (See "Operating Instruction for Underwater Periscope Model No. 5000," Lerma Engineering Corporation, Northampton, Massachusetts.)

6. Procedure for disassembling the periscope

a. Remove the periscope from the pool water with the same degree of care as outlined previously. With clean rags, wipe the periscope dry as it is being raised from the water.

b. Transfer the periscope to the blotting paper. Two individuals are again needed to support the tubular section as it is laid down. Remove the rope from the crane.

c. Wipe the periscope with clean wet rags and have the Health Physicist check the assembly for contamination. Decontaminate the assembly if it is necessary. The transferable surface contamination limits are: 30 dpm/100 cm^2 for alpha and 1000 dpm/100 cm^2

for beta-gamma emitters. However, when the contamination involves radionuclides such as plutonium or some other long-lived emitter of comparable toxicity, the alpha levels permitted should average no more than 1/100 the given value.

d. To depressurize the periscope, depress the center pin in the valve (similar to method used to deflate an automobile tire).

e. To disassemble the periscope, follow the assembly procedures in reverse.

f. Store the disassembled pieces in the two instrument boxes. PRECAUTION: Two individuals are required to transfer the 15-ft section.

6.2.12. Neutron Radiography Facility (presently on standby)

References

Dwg. M-11247-EN-100 through M-11247-EN-107 and M-11247-EN-111 through M-11247-EN-135

1. Introduction

A facility using neutrons to make radiographs for nondestructive examination of a variety of materials and experiments has been placed in service at the ORR. Operations Division personnel operate the facility, and Metals and Ceramics Division personnel are responsible for handling the detector, transferring the image, and processing the film.

This procedure is limited to a brief description of the facility and operating instructions specifically written for the operating group. A report[1] covering the design and evaluation of the neutron radiography facility at the ORR together with a few applications has been published.

---

[1]B. E. Foster, et al., Development and Operation of a High-Intensity High-Resolution Neutron Radiography Facility, ORNL-4738, December 1971.

2. Description[1]

The facility is located in the P-9 poolside position near the core of the ORR at a depth of 24 ft below the surface of the pool. The reactor core serves as the neutron source, and the pool water serves as a biological shield. As shown in the isometric drawing of Fig. 6.11, the two major assemblies of the facility are a camera and a collimator. The camera is detachable from the collimator and is designed for easy removal from the pool for periodic maintenance. The entire facility is held in place by its own support structure, which rests on the floor of the reactor pool and is weighted to prevent flotation. The collimator is attached to a base plate near the reactor core. An alignment bar on the side of the collimator slides into an adapter fixture which is attached to the base plate to position the collimator in relation to the face of the reactor.

a. Collimator. As shown in Fig. 6.11, the collimator is a flat-sided aluminum funnel (pyramid shaped) 64 9/15 in. long. It is lined with neutron-absorbing materials except at the ends. The first 18-in. portion of the collimator (from the small end) is lined with Eu_2O_3-aluminum dispersion 1/4 in. thick, and the remainder is lined with 1/4-in.-thick boral plate. The collimator is continuously purged with dry air. This purge reveals any developing water leak in the collimator and prevents the buildup of any radiolytic gas.

As fabricated, the collimator has a fixed aperture 0.3 in. square. Attached to the collimator is a curved plate with variable apertures which can reduce the opening to 0.2 or 0.14-in. squares or to a 0.08-in.-diam circle. These apertures are in a Eu_2O_2-aluminum dispersion material 3/16 in. thick, encased in 1/32-in.-thick aluminum. The top portion of the multiaperture assembly is made of solid aluminum, and, when it covers the

[1]The major portion of this description was extracted from the report written by B. E. Foster, et al., Development and Operation of a High-Intensity High-Resolution Neutron Radiography Facility, ORNL-4738, December 1971.

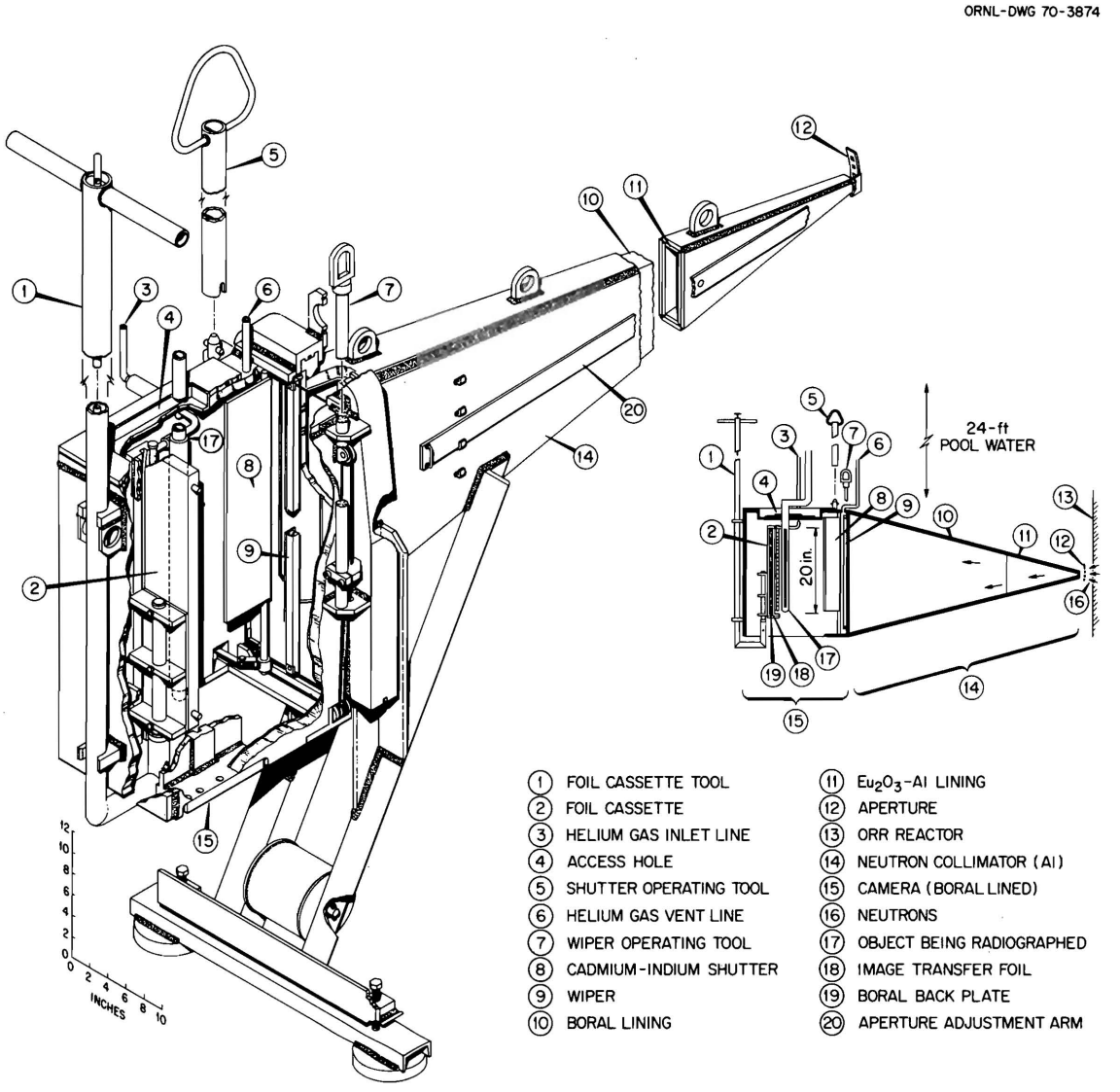

Fig. 6.11. Neutron radiography facility in the ORR.

end of the collimator, the 0.3-in.-square opening is effective. Aperture selection is by movement of a lever that fits into any one of four slots located on the side of the collimator. The uppermost slot positions the solid aluminum portion over the collimator opening, and the other three slots, in descending order, position the 0.2-, 0.14-, and 0.08-in. apertures, respectively.

b. Camera. The camera chamber is made of 1-in.-thick type 6061 aluminum plate. The chamber, with inside dimensions of 9 15/16 in. wide, 19 1/2 in. long, and 26 13/16 in. deep, fits onto the large end of the collimator as seen in Fig. 6.11. The chamber is lined with 1/8-in.-thick boral plate, is open at the bottom, and contains a shutter mounted at the collimator end. The shutter of the camera is 20 3/4 in. long x 4 3/8 in. wide x 1/4 in. thick. It was fabricated by sandwiching 0.01-in.-thick indium foil between two sheets of cadmium 0.025 in. thick. Two cover plates of type 1100 aluminum, 1/16 and 1/8 in. thick, were added for rigidity.

In front of the shutter is a wiper which is operated by a push-pull motion of a rod extending out of the camera. The rod is coupled to the wiper by a series of pulleys and cables. The wiper action removes any droplets of water from the face of the collimator to which the camera is sealed. The camera also contains small gas jets which are directed toward the position of radiographed objects and the foil holder. The water in the camera is displaced through the open bottom by a flow of helium through these jets. After the water is removed, the continuous helium flow through the jets serves to dry the specimen and front face of the foil holder.

The top plate of the camera, shown in Fig. 6.12, has an opening 4 5/16 x 6 in. through which specimens can be inserted. After placement of the specimen and before radiography, the top opening must have a gas-tight seal before the water is displaced. There are three

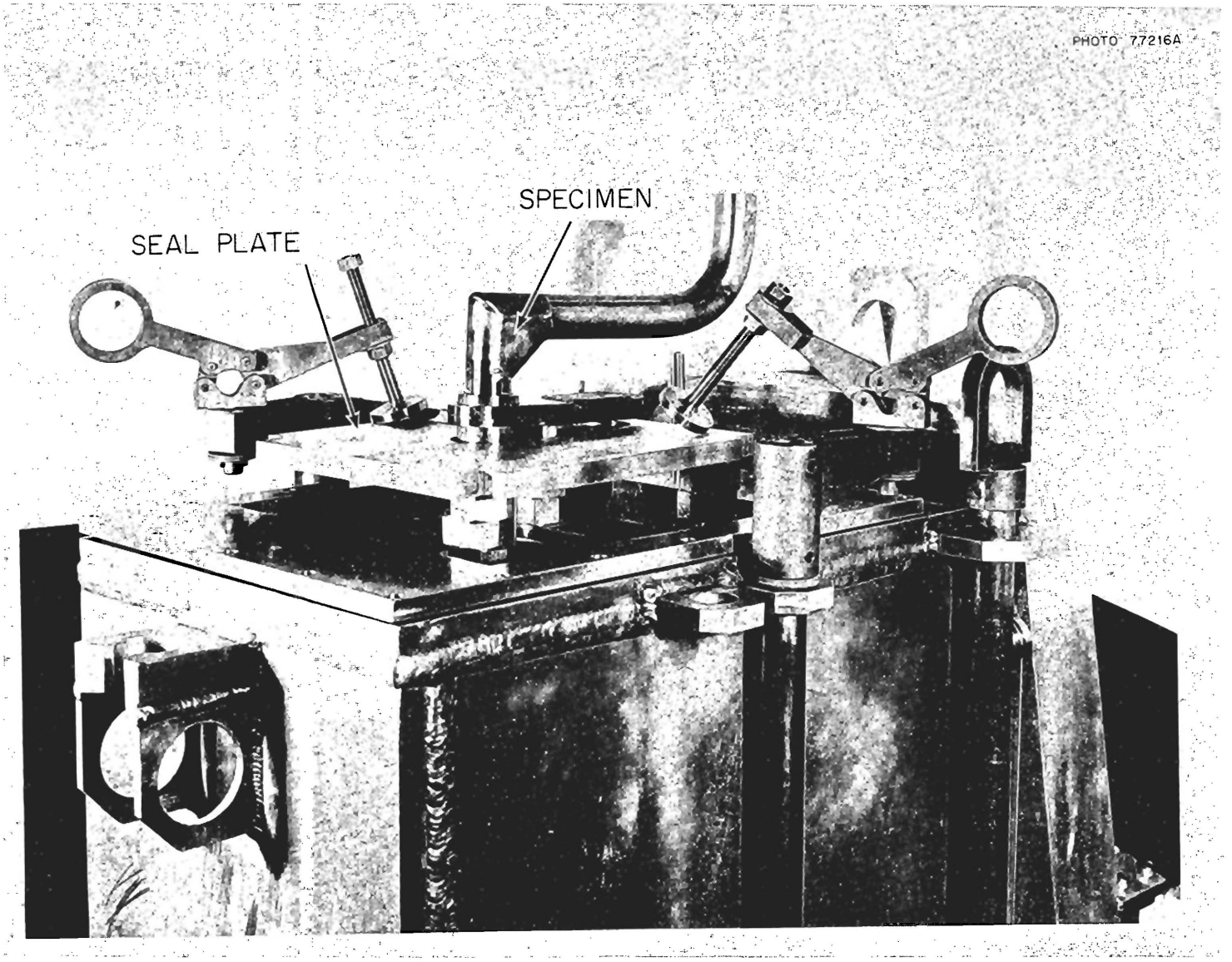

Fig. 6.12. Top of camera and seal plate containing a small opening for insertion of the specimen (shown in position).

methods by which objects to be radiographed can be placed in the camera and the gas-tight seal effected. The one illustrated in Fig. 6.12 uses a clamped sealing plate arrangement between the object and the top of the camera. As shown, this plate contains a small opening for insertion of specimens of smaller diameter than this opening. This is typical of the arrangement for radiographing irradiation test capsules from the ORR. This method requires that a matching sealing flange for the smaller opening be fabricated on the object.

A second method is to employ an ice seal adapter using liquid nitrogen, as shown in Fig. 6.13, to seal irregularly shaped objects (or those which do not have a matched sealing flange). The third method, and certainly the simplest, is to attach the object to the foil holder or place it in a holder attached to the foil package. When using this latter method, the camera is sealed with a solid cover plate and objects are limited to a maximum length of about 20 in.

c. Foil cassette. The foil cassette is 21 7/16 in. long x 5 1/16 in. wide x 1 3/16 in. thick and contains two aluminum sheets each 0.016 in. thick. The indium foil to be used for image transferring is placed between the aluminum sheets. This sandwich of aluminum-indium-aluminum slides into a slot in the foil cassette. The slot is between the 1/4-in.-thick boral backplate (which absorbs neutrons and prevents backscatter) and the 0.016-in.-thick aluminum front cover of the foil cassette. The assembly will accept a 21- x 4 1/2-in. sheet of foil up to 0.015 in. thick. The cassette is sealed from the pool water with a plate containing an O-ring seal.

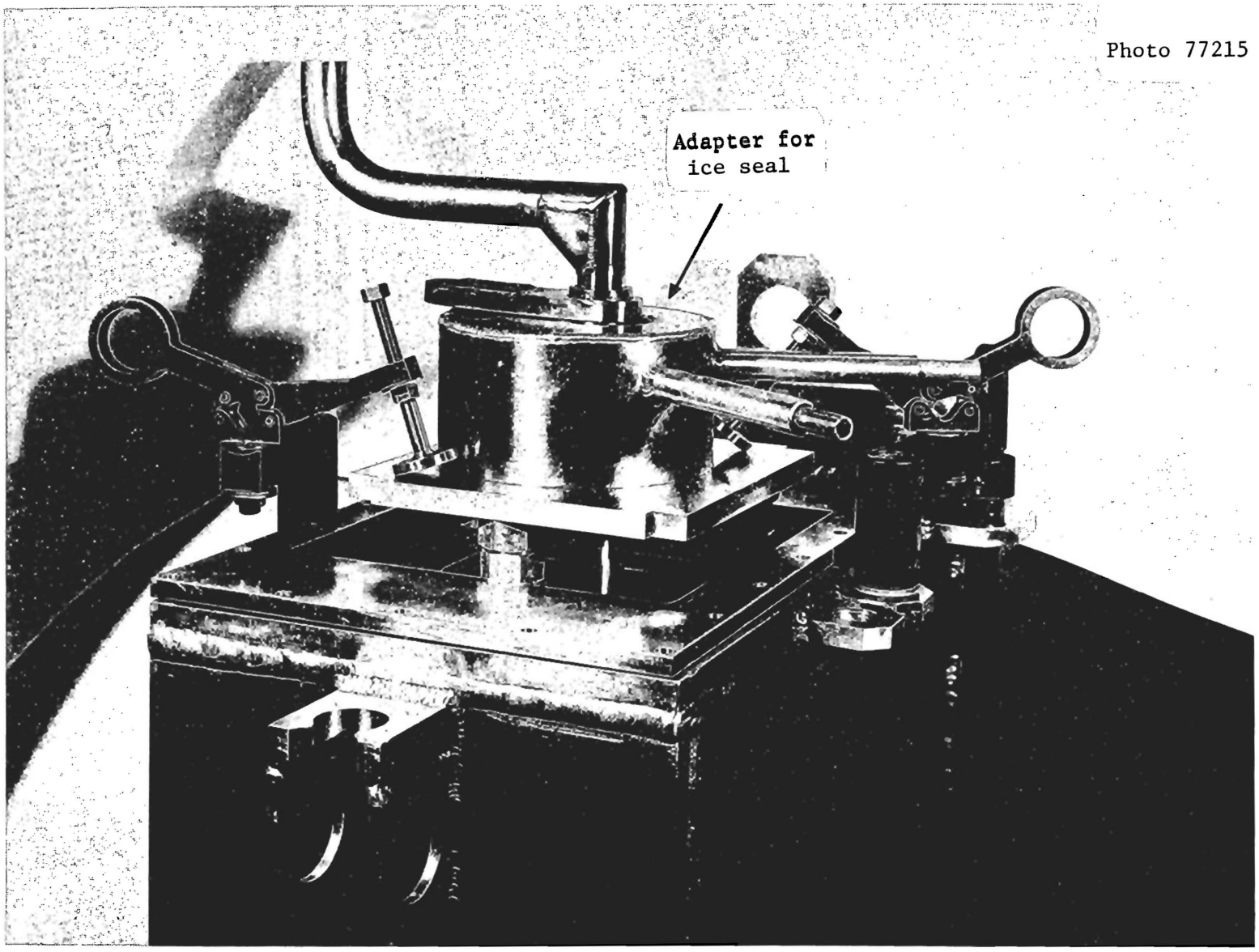

Fig. 6.13. Top of camera with adapter for ice seal.

d. Gas flow systems. There are two gas systems associated with this facility - the helium pressurization system and the air purge system. It is imperative that each system work properly to ensure satisfactory results from the facility.

The helium pressurization system, Fig. 6.14, serves as the source for displacing the water in the camera box and maintaining a slight purge of helium gas through the box during the period when the foil cassette and object are being bombarded with neutrons. Helium gas is used to minimize gaseous radioactivity since the camera box environment is subject to a thermal neutron flux of approximately 1.7×10^8 n cm^{-2} s^{-1}.

The air purge system, Fig. 6.15, serves to purge and pressurize the collimator continuously which should at all times have an air environment. This purge should reveal any developing water leak in the collimator and prevent the buildup of any radiolytic gases.

3. Operation of the facility

Operation of the facility requires personnel from the Operations and the Metals and Ceramics Divisions with responsibilities delegated as follows: Metals and Ceramics Division personnel will perform all aspects of assembling the foil cassette (this is usually done at the ORR poolside), transferring the exposed foil cassette to the laboratory, disassembling the foil cassette, transferring the image to the film, and processing the film; Operations personnel will perform all other activities associated with the operation and maintenance of the facility. The object to be radiographed and the foil holder containing the indium foil are placed in the proper position in the camera. The water in the camera is then removed using a helium pressurizing system. When the camera is fully pressurized, helium bubbles will emerge from beneath the camera and a small flow will sustain a small stream of bubbles from the camera. Any droplets of water on the specimen or foil cassette will be removed by the helium jet purge.

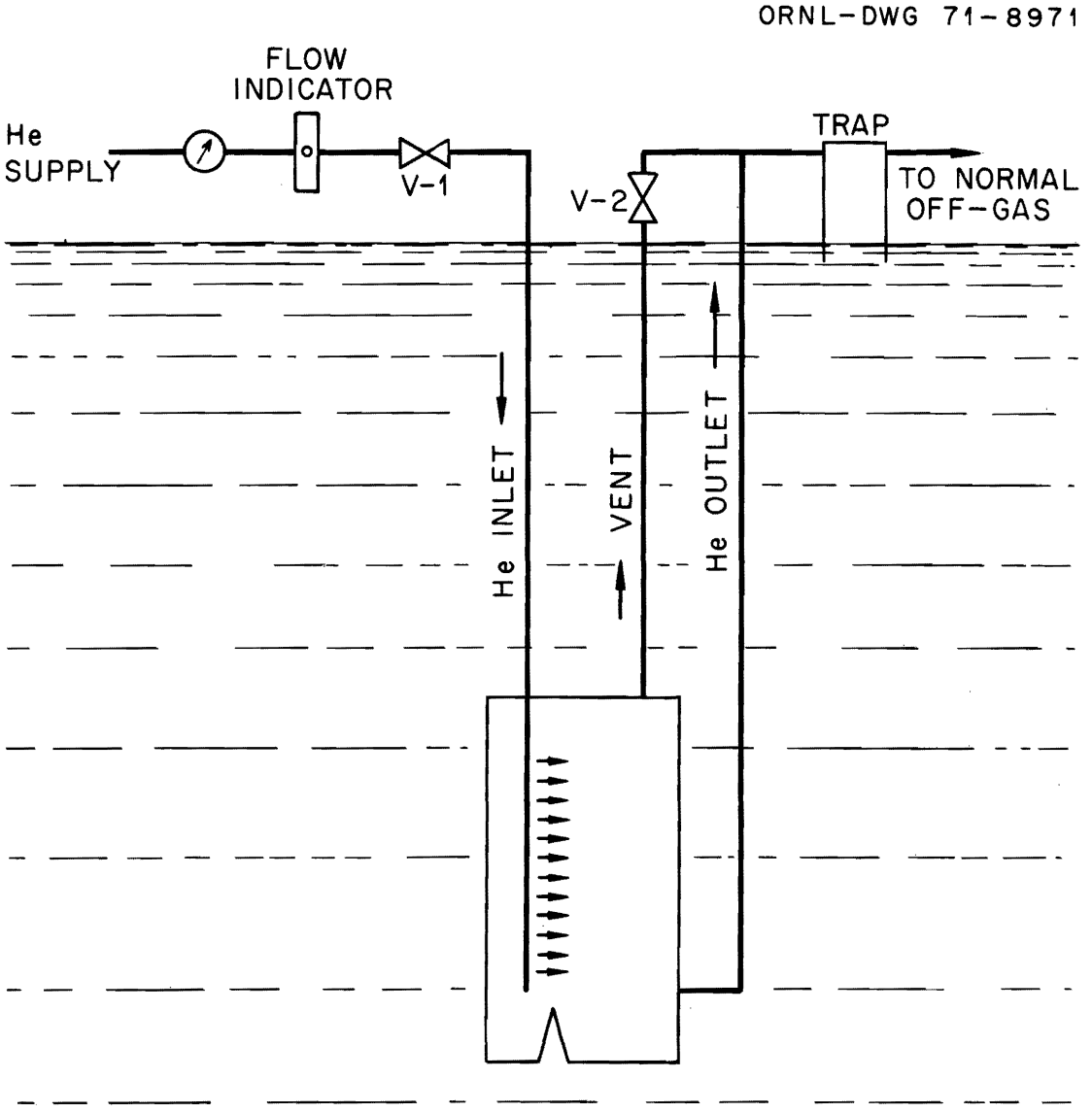

Fig. 6.14. Helium pressurization system for camera.

ORNL-DWG 84-9267

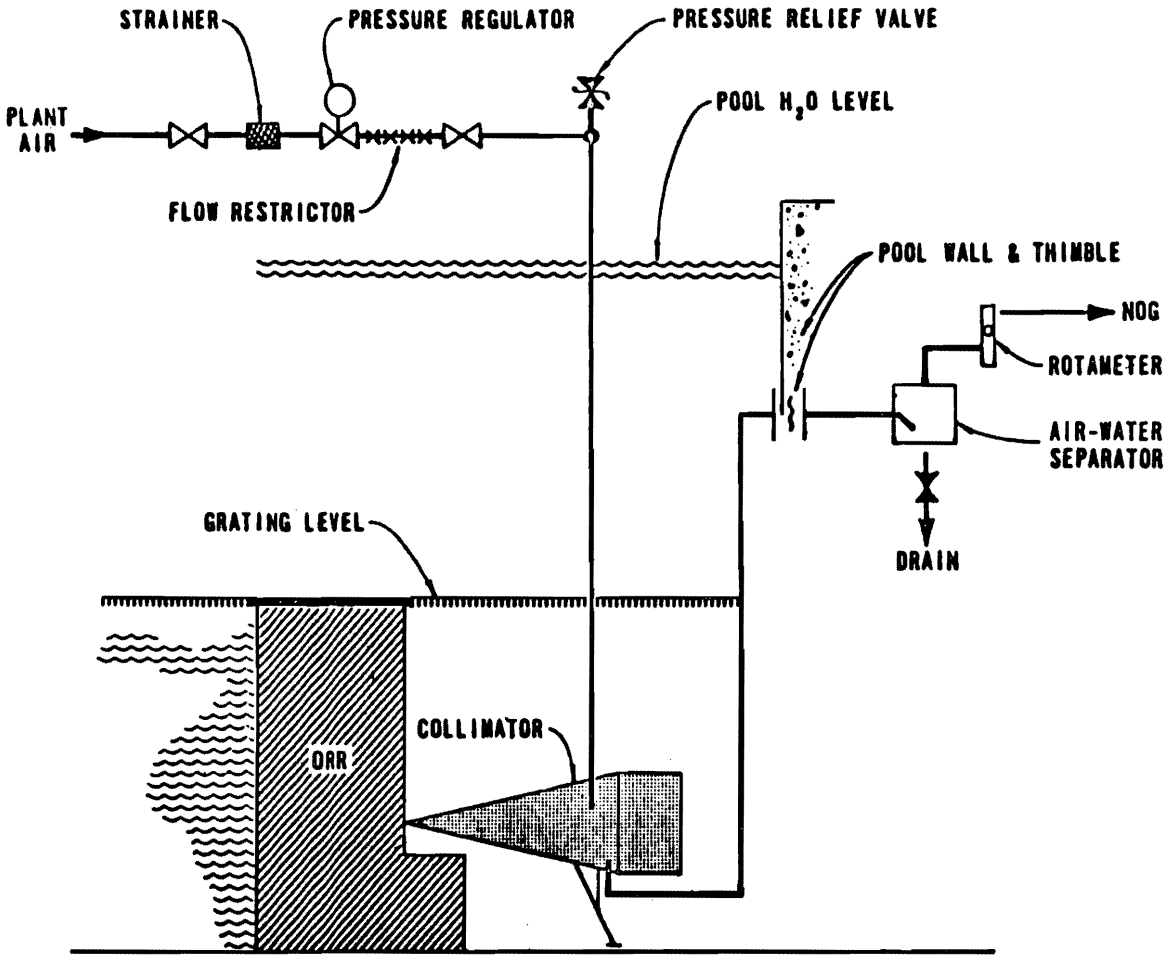

Fig. 6.15. Air flow sheet for collimator.

Operation of the wiper assembly will remove water droplets from the interface of the collimator and camera. The shutter is then opened for the time required for the exposure (typically 3-5 min) and then closed. The camera is then depressurized and the foil cassette which has been activated (approximately 10 R/h at 3 in.) is removed.

Since there are three methods by which objects can be radiographed, specific details for handling each is included. A procedural checksheet is included as Example 6.5 and is to be used and retained as a record of each complete operation.

a. Seal-plate adapter (see Fig. 6.12)

This type of arrangement is used for radiographing irradiated test capsules which have been designed with a matching sealing flange which, in turn, fits into the removable seal plate of the camera box. The seal plate is first fitted with a thin (approximately 1/16 in. thick) rubber gasket in the opening near its center which provides the seal between the seal plate and the matching sealing flange of the experiment. The seal plate is then placed in position atop a neoprene gasket (approximately 1/8 to 3/16 in. thick) on the camera box top and secured in place with the two clamps.

The experiment is then inserted into the camera box through the center hole of the seal plate and secured. The weight of the experiment is then supported on the camera box by the seal plate gasket, and the slotted plates on the seal plate are secured, thereby providing the seal. The upper portion of the experiment which extends above the water is secured to the mobile bridge during the radiography.

NEUTRON RADIOGRAPHY

Detailed Procedural Checklist

Date _____ Customer _____

Charge No. _____ Operations Supervisor _____

Operators _____

Brief Description of Item to be Radiographed _____

_____

_____

	Initial
1. Prepare pool area.	
a. Move grating and beam support.	_____
b. Locate aluminum bridge in proper position (normally it will be directed above the western edge of the reactor tank).	_____
2. Obtain the necessary tools.	
a. Transfer shutter tool to reactor pool.	_____
b. Transfer end-box tool to reactor pool.	_____
c. Transfer foil cassette tool to overhead crane.	_____
3. Prepare foil cassette (film pack) and mount on tool (Metals and Ceramics Division responsibility).	_____
4. Prepare the seal-plate adapter if it is to be used. A thin rubber gasket should be glued to the hole near its center. Slit the gasket to permit the experiment to be inserted.	_____
If the ice-seal adapter is to be used, install as previously described.	_____
If an object is to be attached to foil cassette, it will be performed just prior to step 3 above (Metals and Ceramics Division responsibility).	

Example 6.5.

A solid plate will be installed and clamped into position on top of the camera box. _____

5. Place the seal plate on top of the camera box and gasket and fasten in place using the end-box tool (15/16-in. end box). _____

6. Foil cassette (film pack) should be installed and locked in place. Cassette is lowered on the west side of the camera box to a position just below the bottom edge of the camera box so it can be moved east, aligned with the cassette track inside the camera box, and raised until the tool fits into the "v" stop. The locking position of the tool is rotated 90° counterclockwise to secure the unit in position. _____

7. Transfer the experiment (or other object to be radiographed) so it can be handled by personnel on the aluminum bridge. _____

8. Insert experiment (or other object to be radiographed) into the camera box through the opening in the seal-plate position and seal by depressing the gasket; then lock in place with the slotted plates on the seal plate using the end-box tool with 7/8-in. socket. If the ice-seal adapter is to used, omit this step and proceed to step 9. _____

9. (To apply <u>only</u> if the ice-seal adapter is used and if applicable adapter at this point is in the position and secured.) Transfer experiment from aluminum bridge and insert into camera box through the "key hole" of the ice-seal adapter. Position experiment in the proper vertical location and secure in position. _____

10. Place shutter tool in position (refer to ORNL Dwg. 70-3874 to identify proper position for changing shutter position), and check to ensure that the shutter is in the closed position (shutter tool handle in the east-west direction - full counterclockwise position). _____

11. Blow water out of the camera (refer to ORNL Dwg. 71-8971, Helium Pressurization System for Camera).

    a. Adjust pressure on He cylinder located on north balcony to 16 psi. _____

b. Close valve V-2 which is the vent valve to camera box (top valve). _____

c. Open valve V-1 (which is the He supply) about two turns, and check the top of the camera box for leaks (where the seal plate and experiment are located). If leaking occurs, tighten the seal plate and/or experiment. _____

d. If no leaks are detected, open valve V-1 completely and leave open for 3 min. This should blow out all water from the camera box, and bubbles should be visible coming from the base of the camera box. _____

e. Decrease He flow by partially closing valve V-1 until gas bubbling is diminished to approximately one bubble every 15 s. _____

12. Open shutter for desired time of exposure. _____

13. Close shutter upon completion of exposure. _____

14. Vent gas from camera.

a. Close valve V-1 (the He gas supply). _____

b. Reduce pressure on He cylinder to 0. _____

c. Open vent valve V-2 and permit the He gas to escape to the off-gas which allows the camera box to refill with water. _____

15. Remove foil cassette (film pack) by rotating the tool 90° clockwise to align with the "v" bracket, lowering unit just below the bottom edge of camera box, then moving it a few inches west to permit raising the unit out of the water. Have a Health Physicist monitor the cassette for radiation as the unit is removed from the water. _____

16. Metals and Ceramics Division personnel will accept responsibility for the foil cassette and process the film. Transfer foil cassette to Metals and Ceramics Division personnel. _____

17. Record radioactivity of film pack (typical reading, 500 mr/h at 6 in.). _____

18. The object which has been radiographed should be removed and stored in a location acceptable to Operations Division and the customer. _____

19. Restore neutron radiography equipment to standby status by:

    a. returning all tools to storage; _____

    b. checking to ensure that V-2 vent valve is open, and that V-1 (He supply) is closed; and _____

    c. checking to ensure that He cylinder pressure is 0, that main valve on cylinder is closed, and that the pressure on the regulator has been reduced to atmospheric. _____

b. Ice-seal adapter (see Fig. 6.13)

This type of arrangement is used to seal irregularly shaped objects which do not have a matched sealing flange. The method involved here uses liquid nitrogen (temperature, -196°C) to freeze the pool water in the confines of the ice-retainer ring through which the object passes. Figure 6.16 shows the liquid nitrogen circuit. The liquid nitrogen is obtained by Operations personnel from the central storage tank located at the northeast corner of Building 3001.

The adapter for the ice seal actually replaces the seal plate on top of the camera box and uses the gasket (1/8 - 3/16 in.) and clamps for securing. The ice-seal adapter and associated insulated piping is quite cumbersome and awkward to handle; therefore, during the placement of this apparatus in the pool and installing of the adapter in position on top of the camera box, care should be taken in handling to avoid striking other objects within the pool and to ensure that the apparatus is securely supported with either the mobile bridge or the overhead crane.

Once the apparatus is securely in position and the adapter clamped in position, the object may be positioned within the keyhole of the adapter. The technique for supporting the object will depend upon the particular type of object to be radiographed. In any event, it will be positioned so the section of interest will be in the sensitive part of the camera.

The "secondary containment" lines, which when evacuated provide the necessary insulation to enable liquid nitrogen to flow in and out of the seal ring, should be connected to a vacuum pump and evacuated to a pressure of approximately -29 in. Hg. The system is then ready for the flow of liquid nitrogen to begin.

ORNL-DWG 84-9266

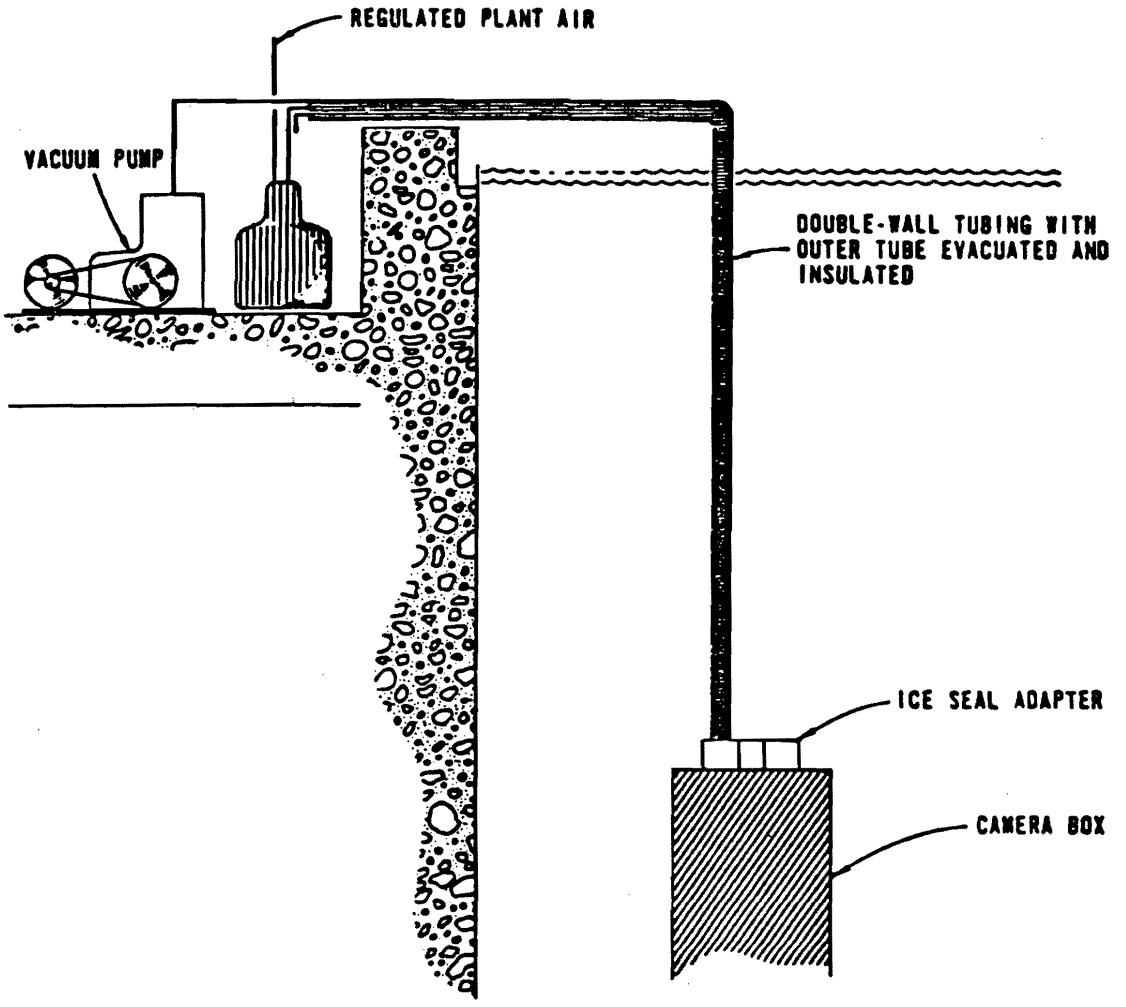

Fig. 6.16. Liquid nitrogen circuit.

Using a regulated air supply at 8 psi (this is building air supply), establish a flow of liquid nitrogen through the ice-seal system. A large quantity of liquid nitrogen will be lost by evaporation during the "cool-down"; however, once the system is cooled down and operating properly, the effluent from the apparatus will be nitrogen in the form of both liquid and gas. If conditions are proper, i.e., lines evacuated to proper pressure, air supply pressure as recommended, and object properly positioned, a seal produced by ice forming around the object should occur in about 45 min. During the radiography work, flow of liquid nitrogen is continued. Following the completion of the work, the flow of liquid nitrogen is stopped, and the "secondary containment" lines are vented to atmosphere to allow the ice seal to melt; thereafter the object can be removed.

c. Piggy-back on foil holder

The simplest method to radiograph an object is to attach the object to the film pack and insert the assembled unit into the camera box. Generally speaking, use of this technique will be the responsibility of Metals and Ceramics Division personnel with Operations Division personnel assisting as required.

d. Customizing for special work

Although descriptions of the three methods generally used are given, proposals will be accepted for new techniques to radiograph any object which will fit into the camera box. Details of revised operation will be developed as the design changes and fabrication of new parts occurs. The requester is expected to bear the expense for any changes from the standard methods; however, Operations and Metals and Ceramics personnel will aid as consultants.

4. Maintenance

This facility requires very little routine or preventive maintenance. Routine checks are performed by Operations personnel. Non-routine-type maintenance is required from time to time, and the Operations Division assumes full responsibility for this.

The one major item that has required a significant amount of maintenance effort has been replacement of the gasket between the camera box and the collimator. This replacement has been necessary to eliminate a gas leak in this area during attempts to blow out the water from the camera box. Because of the probability of this recurring, a detailed procedure for this activity is included.

a. Removal of camera box. The camera box is supported on the collimator section by a collar (inverted "U") which is an integral part of the camera box. This collar fits around a flange on the collimator. It is held in position by its own weight and this force provides the necessary pressure to effect the sealing of the gasket. Removal of the camera box requires a vertical lift; however, preparations to perform this operation are required.

(1) Preparation for removal

(a) This operation can be performed only during reactor shutdown since the reactor pool water level must be at grating level.

(b) Since pool entry is required, normal pool entry requirements must be met.

(c) Check the helium pressurization system to ensure that the pressure is "0" on the gauge.

(d) Disconnect the three gas lines to the box [(1) He inlet, (2) He outlet, and (3) vent line] at the closest disconnect point to the box.

(e) Transfer the tools needed for camera-box removal to the reactor pool. Attach the proper tool to the small overhead crane via a chain fall.

(2) Place a tool (any long type will suffice) on top of the collimator near the west end and secure its upper end to the mobile bridge. This tool will be used during the camera box removal as a height gauge to ensure that the collimator does not move vertically during the decoupling of the camera box collar and collimator flange.

(3) Attach the removal tool to the camera box.

(4) Slowly, by using the chain fall, lift the camera box vertically while observing that the collimator does not move. It may be necessary to "jar" the tool which is used to lift the camera box to cause initial separation of the components. The gas lines should be secured just before the camera is brought out of the water.

(5) Have HP available to monitor the radiation level as the camera box is removed from the water. The radiation level of the box will be approximately 200 mr/h at 3 in.

(6) The camera box will be transferred to the C-zone for gasket repair and general inspection.

(7) The extra tool which was used as a height gauge resting on the collimator should be removed.

b. Replacement of camera box. The procedure for replacement of the camera box is essentially a reversal of the procedure for removal.

(1) The camera box is transferred from the C-zone to the reactor pool via the overhead crane.

(2) Care should be taken not to damage the gasket.

(3) Slowly lower the camera box into position while aligning the collar of the box with the flange of the collimator.

(4) After the camera box is seated, a tool may be used as a height gauge to ensure proper elevations of the components.

(5) If it is necessary to lift the box once the collar and flange are in the seated position or have created a "binding condition," a tool to be used as a height-gauge should be rested on the west end of the collimator.

(6) After the box is seated in position, the gas lines should be reconnected as follows:

(a) He gas inlet line - the line which attaches to the camera box at the top of the north side.

(b) He gas vent line - the line which attaches to the eastern end of the top of the camera box.

(c) He gas outlet line - the line which attaches to the camera box near the bottom of the north side.

(7) A pressure check should then be made to determine if the unit is leak-tight. This can be done by following the procedure for blowing out the water of the camera box (step 11 of Example 6.5).

(8) After the pressure test has been completed and the results are satisfactory, the facility should be placed on standby (step 20 of Example 6.5).

c. Routine checks. When the facility is on standby, there is only one "active" system associated with the apparatus, namely, the air purge and pressurization system of the collimator as shown in Fig. 6.15. Periodic checks should be made to ensure that this system is functioning properly.

(1) The pressure gauge on the air supply (located on the pool parapet, north side) to the collimator should read 15 psi.

(2) The pressure gauge on the air-water separator tank on the collimator exit line (located on the second level balcony, north, near thimble T-5) should indicate the same reading ± 1 as in step 1 above.

(3) The rotameter should read 70% ± 5 full scale.

If unable to obtain the values indicated above, contact the Reactor Supervisor or his designated representative. A change in values could, but not necessarily, be an indication of a water leak which would require special attention not covered by this procedure.

7. EMERGENCY PROCEDURES

7.1. Emergency Electrical Power

References

Drawings:

F-29682

D-29683

D-29684

D-29685

D-29686

E-20393-D-003-D

E-20393-D-010-D

E-20393-D-005-D

E-20393-D-020-D

NOTE: THE EMERGENCY DIESEL GENERATOR IS NOT REQUIRED FOR REACTOR OPERATION. BATTERY-POWERED EMERGENCY LIGHTS ARE PROVIDED AND OTHER BATTERY-POWERED EQUIPMENT WILL BE USED DURING PREPLANNED DIESEL OUTAGES. PORTABLE GASOLINE-DRIVEN GENERATORS ARE ALSO AVAILABLE AT ORNL AND WILL BE USED AS NEEDED.

7.1.1. Introduction

During normal operation, TVA electrical power is supplied to the reactor complex. (TVA electrical power lines go to substation 0901 and then on to substation 3000 to supply the west half of ORNL; this power supplies Building 3042 and the reactor secondary pumps. Power lines go

to substation 0901 and then on to substation 4000 to supply the east half of ORNL; this power supplies the reactor primary cooling pumps and the cooling towers.)

During emergency conditions, electrical power is supplied to the ORR, BSR, and Building 3003 (electric blower for OGR and Building 3003 experiment facility) by a battery-started, diesel-driven generator which is located in the first floor level annex of the ORR building. This generator supplies electrical power to the following:

1. the Facility Radiation and Contamination Alarm System (ORR and Building 3001),
2. the fire alarm system,
3. the shutdown cooling pump,
4. the reactor seat-switch lights,
5. the facility cooling pumps,
6. certain experiment facilities (as needed),
7. certain lights in the building,
8. the public-address system, and
9. No. 1 Reactor-Outlet-Water Temperature Recorder.

7.1.2. Description

The diesel engine (manufactured by the Caterpillar Tractor Company) is started by a 32-V bank of lead-acid batteries. The electric generator (same manufacturer) has a rating of 350 kW and will supply 3-phase, 60-cycle, 480-V ac electric power.

In the event of an interruption in the TVA-supplied electrical power resulting in a decrease in line voltage to 70% of normal (approximately 340 V) the diesel-driven generator will start automatically and a transfer switch will transfer the emergency generator output to the "emergency services" bus (see Fig. 7.1). After 8 $\pm$ 2 s (this includes the operating

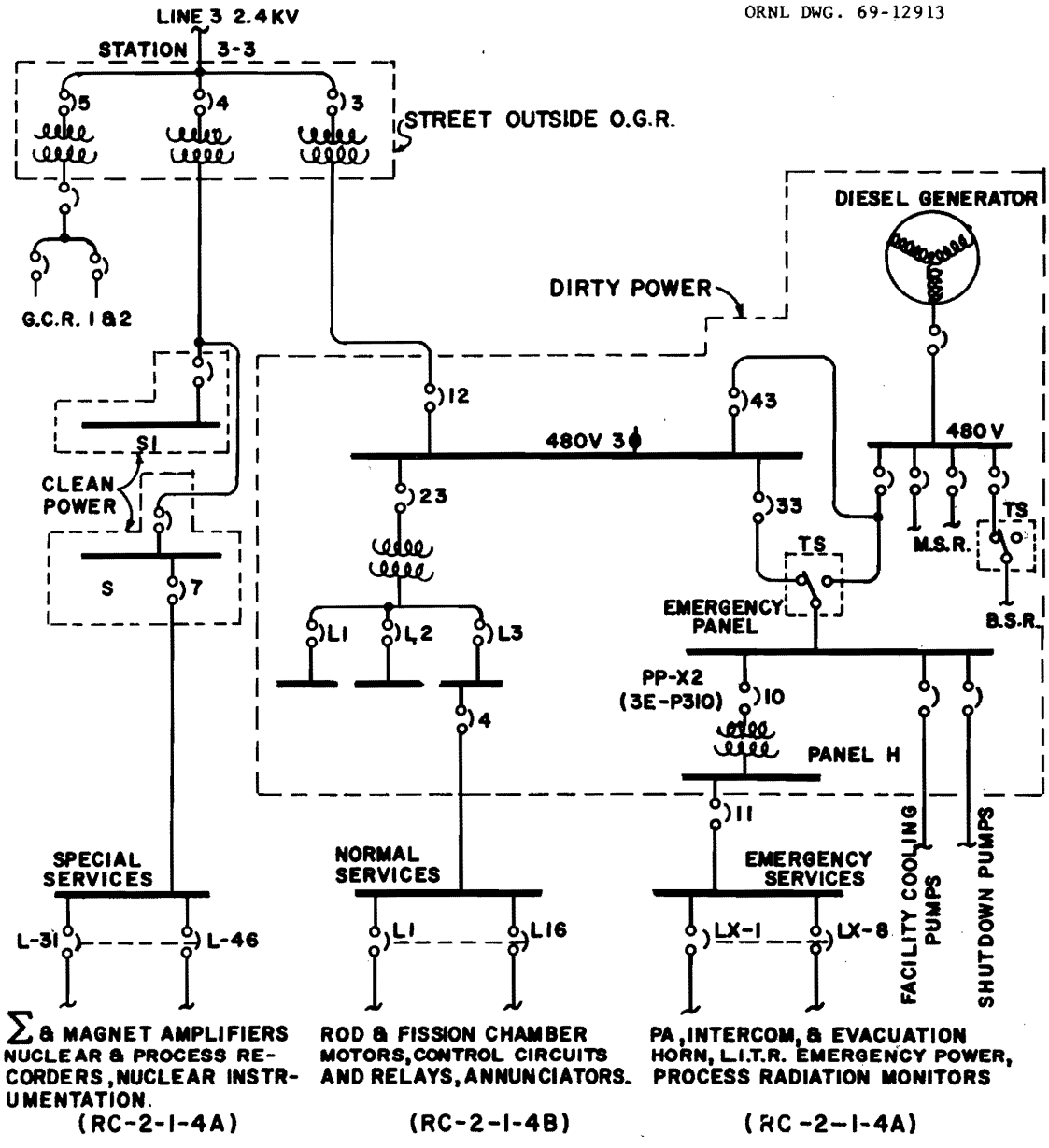

Fig. 7.1. Simplified power diagram - ORR.

time for the transfer switch and the starting of the diesel), those items mentioned above will be supplied with electrical power. When the TVA-supplied power is restored and following a time delay of approximately 2 min, the emergency loads will be transferred to the normal source automatically; however, the diesel unit must be de-energized manually.

The controls for the diesel unit are located on the north wall of the diesel room; they are locked behind a transparent viewing box to ensure that they remain in the proper mode. To the right of the control box, an integrator readout is provided to indicate the total time that the generator has been operated.

Annunciators are provided in the ORR control room to indicate the status of the diesel-driven generator in regard to: (1) the low oil pressure or the high water temperature that may have de-energized the diesel engine; (2) battery breaker position or status of battery charger output; (3) whether the demand for the diesel operation (need for emergency power) was initiated from (a) Building 3042, (b) Building 3010, or (c) Building 3003; and (4) whether the diesel engine is operating. (The audio silence button for these annunciators is located at the rear of the ORR control room's graphic panel.)

7.1.3. Precautions

Although most of the generator-reliability tests are actually performed by an electrician, the shift supervisor should be familiar with the procedures performed during the quarterly checkout.

1. Ensure that after each routine test or servicing of the diesel engine or the diesel-driven generator by P&E personnel, the "selector" switch on the north wall of the generator room has been returned to AUTOMATIC.

2. Ensure that the "over-crank" switch (located in the diesel room on the same control box as the "selector" switch) is in NORMAL.
3. Ensure that the control box (located in the diesel room) remains locked.
4. Ensure that the "transfer-test" switch (located on the basement south wall at the entrance to the vault) is in NORMAL. (In TEST, the power supply will be taken from the diesel-driven generator in preference to the TVA-supplied power even though the latter is available.)
5. Ensure that the "reset" lever on the diesel engine is facing west. (Otherwise, there would be no fuel supply to the diesel engine.)
6. Ensure that the automatic-start features of the diesel are not tested while the reactor is operating; these tests involve a momentary interruption in electrical power and will cause a reactor shutdown.
7. Ensure that, during the quarterly checks, the No. 12 (3-B312) breaker is opened before the No. 43 (3-B343) breaker is closed. (Otherwise, TVA-supplied power and diesel-generator-supplied power will feed the 480-V, 3-Ø bus at the same time.)

7.1.4. Operating Procedures

1. To energize the diesel engine manually:
   Turn the "selector" switch (located in the diesel room) to MANUAL. (This is the preferred, usual method of starting the diesel for the routine testing required while the reactor is operating.)

2. To energize the diesel engine automatically:
   When the "selector" switch is in AUTOMATIC, the diesel engine will energize automatically when the TVA line voltage decreases to 70%. (A request for diesel-supplied power may be initiated by either the ORR or the BSR.) This condition may be simulated from the ORR by the following methods:
   a. Turn the "normal-test" switch (located at the entrance to the basement vault) to TEST. In TEST, the "emergency services" panel is supplied by the diesel-driven generator instead of the TVA-supplied power; since there will be a momentary interruption in electrical power when this switch is placed in TEST, the diesel engine will energize. (NOTE: This is not the preferred method of testing; the following method (b) is used during the quarterly functional check-outs.)
   b. Turn the "emergency transfer" breaker switch No. 33 (3-B333) to OPEN. This action will disconnect the TVA-supplied power from the 480-V, 3-Ø bus supplying the ORR emergency electrical system. As a result, the diesel-driven generator will energize and the "transfer" switch will transfer the output of the emergency generator to the emergency electrical system (emergency panel PP-X2).
3. To de-energize the diesel engine:
   NOTE: Determine that there is no load on the diesel generator. (Wait approximately 2 min for automatic transfer after test.) Turn the "selector" switch to EMERGENCY STOP; after the engine has completely stopped, turn the "selector" switch to AUTOMATIC. (This will allow the diesel to start automatically when the

TVA-supplied line voltage again decreases to 70%.) [NOTE: Breaker No. 33 (3-B333) must be closed first; otherwise, the diesel engine will again energize when the "selector" switch is placed in AUTOMATIC.]

4. If the diesel engine fails to start or is de-energized when it should be operating, the cause should be determined immediately. The probable causes will be: (1) over-cranking*; (2) low oil pressure; and/or (3) high cooling water temperature. (The last two items will be indicated by annunciators in the ORR control room.) After the trouble has been corrected, the "selector" switch must be momentarily turned to RELAY RESET before further efforts at energizing the diesel engine are made. If over-cranking de-energized the diesel, the breaker behind the locked control-panel box will have tripped - this must be returned to NORMAL before attempts are made at restarting the unit.

---

*If the diesel engine has not started within 25 s, further cranking is terminated. If the over-crank control does operate properly, the over-cranking time will also trip the battery breaker located on the south wall of the diesel room. This condition will be indicated on the oil-pressure and water-temperature annunciator in the reactor control room.

7.1.5. Reliability Checks

To ensure starting and functional reliability, the diesel-driven generator is subjected to frequent and numerous checks. Although most of the checks are performed by personnel of the P&E Division (specifically, an electrician), it is most important that Operations personnel verify that the system's controls are always returned to the proper mode after the completion of any tests. In particular, the "selector" switch must be in AUTOMATIC, the "normal-test" switch must be in NORMAL, and the "reset" lever (on the diesel engine) must be facing west. (These are all routine checks performed by each operating shift.)

To ensure starting and operational reliability, the diesel-driven generator is operated for one hour every other week (under no load). During this time, checks are made on the various subsystems of the unit (e.g., the cooling system, ignition system, lubrication system, battery starter, etc). These checks, performed by an electrician, are initiated by turning the "selector" switch to MANUAL. When the test is completed, the switch should be turned to EMERGENCY STOP; after the diesel engine has completely stopped, the switch should be turned to AUTOMATIC.

All data obtained on these routine tests are submitted to the ORR maintenance coordinator.

To ensure functional reliability, the diesel-driven generator is operated for about two hours during each quarterly shutdown. This test is initiated by terminating the TVA-supplied power at the switch gear in the ORR basement. During this test, most of the building load is also transferred onto the diesel-driven generator. The following procedure should be followed for this test:

1. The day before the scheduled test, the shift supervisor should notify all the experimenters, informing them of the exact time the test will start and the duration. (Incidentally, this test does not affect the "clean" electrical power used by the experimenter for special equipment.)
2. Before the test is to begin, notify the Fire Department personnel (4-6646). They will dispatch someone to the ORR building to block out the fire alarm box.
3. Notify the tank farm personnel (4-8687). (It should be noted that the steam-driven blower on the cell-ventilation system will remain in operation during this test; however, the closing of the back-draft dampers for the electrically driven blower should be verified. The electrically driven blower can be operated during this test, if needed.)
4. Notify the Guard Department (4-6646) that they could possibly receive alarms from the Facility Radiation and Contamination Alarm System when the test is initiated.
5. Announce over the public-address sytem, "There will be a momentary power outage in the ORR building. There will be a 2-h test of the diesel-driven generator." Repeat once.
6. De-energize the Centravac unit in the diesel room (by turning the control switch on the far left to OFF) and place a DO NOT OPERATE tag on the control panel.
7. Turn the "emergency transfer" breaker switch No. 33 (3-B333) to OPEN. This will energize the diesel and supply the "emergency panel" PP-X2 (3E-P310) with electrical power. It should be noted that, at this time, TVA-supplied power is still available to the remaining 480-V, 3-Ø services via breaker No. 12 (3-B312);

this action has only placed the emergency services on the diesel-driven generator. (Incidentally, there is not a breaker in compartment No. 43; it remains empty during normal operation.)

8. Rack out the No. 33 (3-B333) breaker gear with the tool provided and transfer it to the empty switch gear compartment adjacent to it, No. 43 (3-B343). CAUTION: Do not close the No. 43 (3-B343) breaker since we would then be supplying the 480-V, 3-Ø bus with both TVA and generator-supplied power at the same time.
9. Turn the "main breaker" switch No. 12 (3-B312) to OPEN. This action will isolate the 480-V, 3-Ø bus from TVA-supplied power.
10. Turn the No. 43 (3-B343) breaker to CLOSE. This action will supply electrical power to the 480-V, 3-Ø bus from the diesel-driven generator; hence, all normal services (except the air-conditioning unit) will now be supplied with power and can be restarted. (Depress push button PB-14 in the control room and reset the small H&V units around the building; do not restart the Centravac. Restart the pool fill-and-drain pump if needed to maintain the pool water level. Restart the Nash-Hytor pumps. Restart the degasifier pump, if needed.)
11. Record all pertinent data on the various subsystems of the diesel-driven generator.
12. Prior to the end of the test, notify the Fire Department personnel, the Guard Department personnel, and the tank farm personnel of the intended termination of the test and the momentary power outage as the ORR is returned to TVA-supplied power.

13. Turn the No. 43 (3-B343) breaker switch to OPEN.
14. Turn the No. 12 (3-B312) breaker switch to CLOSE.
15. Remove the breaker switch gear from compartment No. 43 and return it to compartment No. 33.
16. Turn the No. 33 (3-B333) breaker switch to CLOSE.
17. After approximately 2 min and after verifying that there is no load on the diesel, de-energize the diesel engine.
18. Remove the DO NOT OPERATE tag from the Centravac and energize the unit. NOTE: Manual restart is accomplished by operating the "start" buttons in the four push-button stations located in the emergency diesel generator room near the panel marked Time Delay Control Panel and pushing the reset button on the Centravac panel.
19. Restart all building H&V units, the Nash-Hytor pumps, and any miscellaneous equipment (e.g., the fill-and-drain pump, the facility cooling pumps, the degasifier pump, and the basement sump pump).
20. Ensure that the cell-ventilation's steam-driven blower has been de-energized and that the electrically driven blower has been returned to service.
21. Check the experimenter's equipment for any abnormalities, or as requested.

7.2. Building Cell-Ventilation System

References: All prints associated with engineering job No. 10167, especially P-10167-G121-D and H-10167-G102-D. Additional prints include D-32851, D-32852, D-32057, D-22232, D-32920, and D-44863.

7.2.1. Description

The cell-ventilation system (Fig. 7.2) consists of a network of five main ducts located throughout the building, a bank of five filters in series, an electrically operated blower, and an auxiliary team turbine. This system removes air from the ORR building at a rate of approximately 9000 cfm, filters it, then discharges it to the atmosphere via a 250-ft stack (No. 3039).

1. Main building ducts

Listed below are the five main ducts and the areas they service within the building (ORNL Dwg. H-10167-G102-D).

a. The main building duct (rectangular in cross section) removes air from: (1) around the pool area between the second and third floors, (2) the overhead reactor-bay area, and (3) the basement area over the B-9 cubicle.

b. A basement cell duct (circular) removes air from the Loop II decontamination cell and equipment room which is located on the first floor.

c. A basement cell duct (circular) removes air from: (1) the NOG seal tank in the subpile room, (2) the HB-5 vacuum pump, (3) the PWL battery room, (4) the PWL valve box, (5) the PWL equipment room, (6) the pipe chase, (7) the pipe-tunnel sump and demineralizer sampling stations, and (8) the laboratory hood.

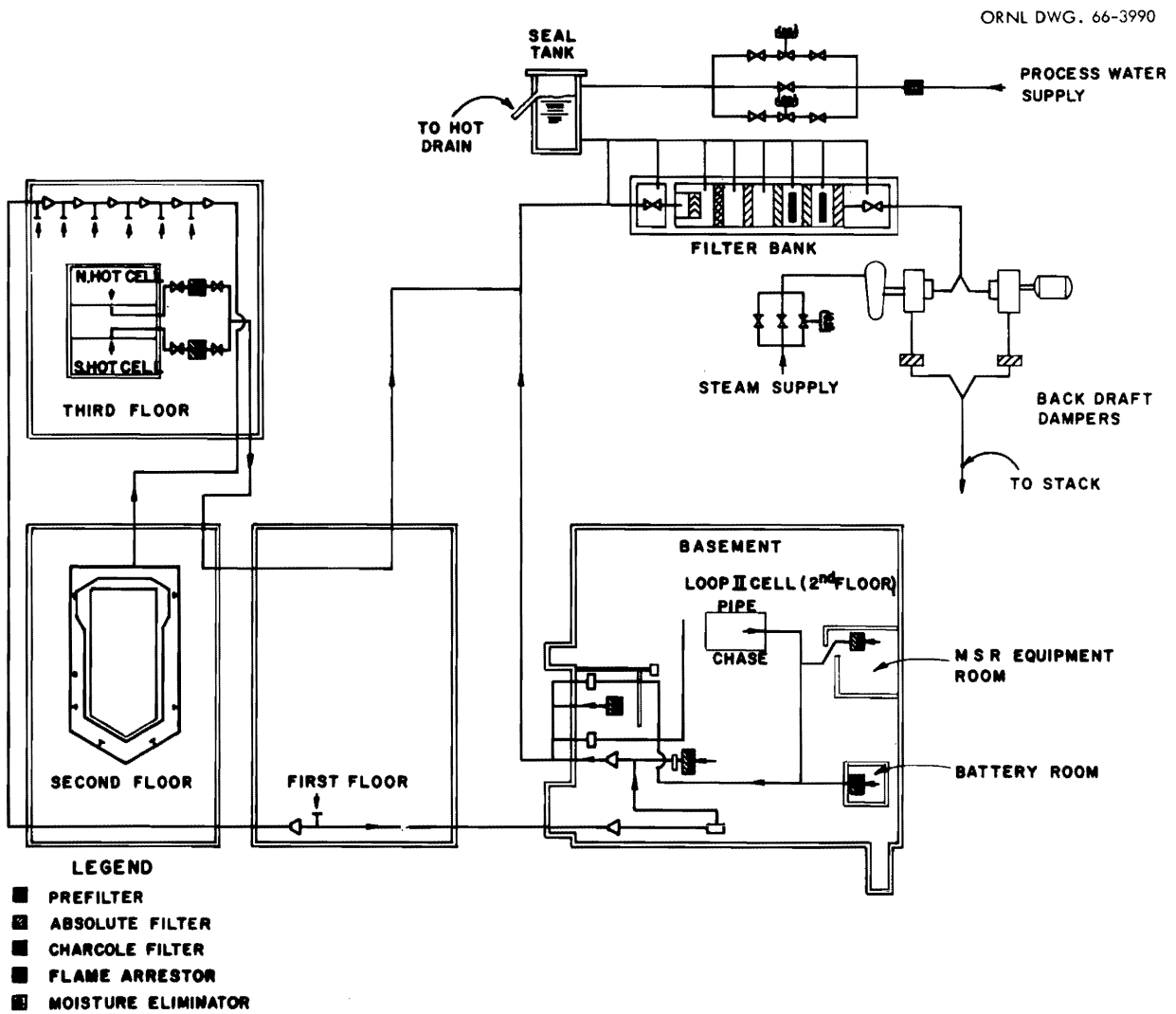

Fig. 7.2. Cell ventilation flow diagram.

d. The hot-cell duct (rectangular) removes air from the hot cells over the reactor pool.

e. A duct in B-9 cubicle removes air from the B-9 cubicle in the basement.

Each duct has a manual damper which is adjusted to provide suitable air flow and pressures and then positioned at the required settings. All five ducts join into one 24-in. duct before entering the filter pit.

2. Filter pit

The filter pit, located north of the stack area, contains five banks of filters. The air from the system is routed in turn through:

a. a prefilter (roughing filter),

b. an absolute filter to remove particulate matter,

c. a charcoal filter to remove iodine,

d. a second charcoal filter, and

e. an absolute filter.

Pressure differentials across each bank of filters are indicated by gauges located at the filter-pit area. An additional gauge, indicating the flow rate through the filters, is also provided.

Since carbon has a relatively low combustion point and would be heated should fission products or other radioactive substances be deposited on it, the possibility of a fire exists. Accordingly, flame arrestors were installed downstream of each bank of charcoal filters, and thermocouples were installed to warn of increasing temperatures (alarm at 38°C). These temperatures are continuously recorded by multipoint recorders in the control room. See Fig. 7.3 for thermocouple location.

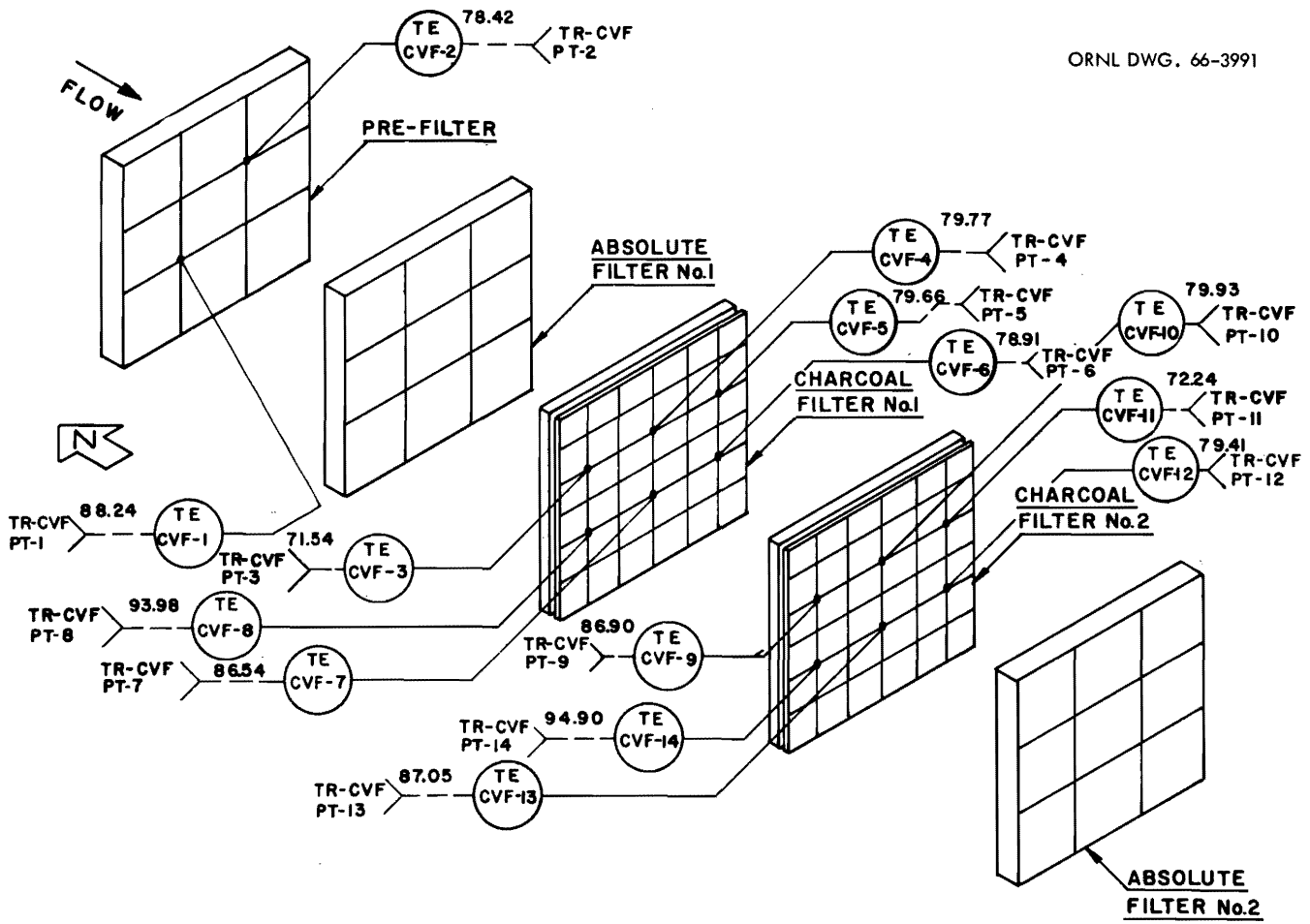

Fig. 7.3. Thermocouple location cell ventilation filter pit.

Each filter bank contains an ILW drain line to remove any accumulated water. These drain lines are connected to an underground seal tank. A water leg is maintained in this tank to provide an airtight seal between the filter system and the drain. The water also seals the compartments.

Butterfly-type shut-off valves are located on the inlet and exit sides of the filters. When neither of the cell-ventilation blowers is in service, these two valves are the only valves capable of absolutely preventing backflow from the stack into the ORR building.

Downstream of the filter system are located the two blowers (in parallel) which maintain the building's negative pressure at about -0.3 in. H_2O by removing air from the building at a rate of approximately 9000 cfm. Normally, the electric-powered blower is in service with the auxiliary steam-driven unit on standby.

7.2.2. Responsibility

The importance of maintaining a reliable building cell-ventilation system cannot be overemphasized. The significance of this system is demonstrated by the fact that its monitoring circuits are connected to the reactor control circuit, thus making its operation a prerequisite to operating the reactor. Accordingly, the system has been provided with dual-channel instrumentation and components to increase the reliability of its operation.

Since this system extends from the ORR building (3042) to the stack area (3039), division of responsibility is required. The Reactor Operations Section has the responsibility for all system components from inside Building 3042 to the exit side of the filter pit; while the

Laboratory Facilities Section assumes full responsibility for all components from the exit side of the filter pit to the stack. Each section will maintain an operating procedure, test procedure, maintenance schedule, and spare parts inventory for its respective area of responsibility.

Routine testing and checkout of the system both on a component basis and also as a unit will be made on a schedule compatible with the operation of the ORR; i.e., this testing and checkout will be scheduled to coincide with an ORR quarterly shutdown. Some tests will require the combined effort of personnel from both sections, and Reactor Operations supervisors will be responsible for ensuring that all criteria relative to system reliability have been met prior to startup of the reactor.

7.2.3. Instrumentation and Controls (ORNL Dwg. P-10167-G121-D)

1. Filter-pit temperature

The location of the temperature sensing elements (thermocouples) in the filter pit is indicated in Fig. 7.3. These temperatures are indicated on a multipoint recorder located in the control room (behind vertical board No. 7). The alarm at 38°C (described above) is effected through process annunciator "filter-pit high temperature" located above vertical board No. 9. If a charcoal filter becomes loaded with excessive amounts of beta-gamma emitter (radioiodine) heat will be generated in the filter bank and the possibility of a fire exists. Thermocouples are used to detect a change in temperature of air passing through the charcoal filter bank.

Since six thermocouples were installed just downstream from each bank of charcoal filters, "spares" exist to accommodate failures. As a general rule, three reliable thermocouples on the downstream side of charcoal filter No. 2 (these also monitor the effluent of charcoal filter No. 1) will be considered a normal minimum. The absolute minimum will be an administrative decision based on operating conditions at the time the general rule is approached.

If an alarm occurs from a thermocouple, investigation should commence immediately to determine the cause. If other thermocouples indicate normal conditions, a thermocouple failure is a high probability and action should be initiated to verify this. A faulty thermocouple must be "jumpered" in the recorder to permit proper response of the recorder to the remaining thermocouple.

2. Steam-fan controls (automatic startup)

Since operation of the cell-ventilation system is a requirement for safety, the reactor power will be reduced automatically if the flow rate through the system should decrease to 5000 cfm (setback to N_L). To ensure uninterrupted operation of the reactor, the steam-driven blower is instrumented to start automatically upon the loss of the electric blower.

Two virtually independent instrument channels are provided to effect the startup of the steam-driven blower upon an increase in the pressure in the cell-ventilation duct (indicating a failure of the electric blower or other trouble). One channel utilizes air-operated instrumentation, the other electric. Both channels are designed to be "fail safe," i.e., loss of air pressure or electric power will result in a startup of the steam fan. This instrumentation is shown schematically in ORNL Dwg. P-10167-G121-D. These channels will hereafter be referred to as the pneumatic channel and the electric channel.

The pneumatic channel consists of: (1) a differential-pressure transmitter, No. PT-108 (3 to 15 psig output, 0 to 10 in. H_2O range - located at the duct over the B-9 cubicle); (2) a pneumatic relay, No. PX-108; and (3) an air-operated control valve, No. PV-108, in the steam inlet line at the turbine.

Under normal operating conditions, plant air pressure (90 to 100 psig) is applied (through PX-108) to the diaphragm of the air-operated steam valve, PV-108 (air to close), and (through PX-108 and ECV-110) to the air cylinder at the backdraft damper, BV-125A, for the steam blower. This air cylinder compresses the "assist-to-open" spring, thus allowing the damper to close freely.

When the duct pressure, as sensed by PT-108, increases to -2 in. H_2O, the output signal to PX-108 will be decreased to 5.4 psig. At this pressure input, PX-108 will be actuated, and the air supply to PV-108 will be vented, thus allowing the steam supply valve, PV-108, to open. At the same time, the air supply to the 3-way solenoid valve, ECV-110, is also vented, thus releasing the compressed "assist-to-open" spring and, consequently, allowing the backdraft damper, BV-125A, for the turbine to open.

The electrical channel consists of: (1) a differential-pressure switch that will actuate when the duct pressure increases to a negative 2 in. H_2O and (2) a solenoid-operated block valve, PV-110, in the steam line. This sensing element, PS-110, is located at the duct over the B-9 cubicle.

Under normal operating conditions, the solenoid valve, PV-110, remains energized and, consequently, closed. When the duct pressure increases to -2 in. H_2O, the differential-pressure switch, PS-110, actuates and subsequently de-energizes the solenoid-operated valve, PV-110.

This action, as well as an electrical power outage, allows the valve to open and supply steam to operate the turbine. As with the pneumatic channel, the 3-way solenoid valve, ECV-110, will be vented, thus releasing the compressed "assist-to-open" spring and, consequently, allowing the backdraft damper, BV-125A, to open.

It should be noted that pressure switch PS-124, on the discharge of the electric blower, opens when the pressure on the discharge side decreases to 7 in. H_2O (positive). This action will actuate ECV-124 (3-way solenoid valve) and allow the backdraft damper, BV-125B, on the electric blower to close. This will ensure that the steam turbine will provide an adequate flow rate when the electric blower is de-energized.

3. Main-duct pressure-regulating damper controls

The controls for the main-duct pressure-regulating damper are located on panel C in the basement. The differential-pressure transmitter, PT-108, discussed in the steam control section not only sends its control air signal to PX-108 but also to controller PIC-108 which controls the damper operator PCV-108. This operator is reverse-acting so that the damper is wide open as PCV-108 receives the 15-psig signal (low duct pressure) and gradually closes as the signal is reduced from 15 psig (increasing duct pressure).

4. Main-duct flow instrumentation

Flow in the main duct, downstream from the filter pit, is sensed by two pitot-venturi tubes which are connected to differential-pressure cells located in an enclosure mounted on the east side of the cell-ventilation filter pit. These differential-pressure cells, No. PT-65 and No. PT-66, supply a signal to pressure recorders PR-65 and PR-66 (one recorder, two pens) and to pressure switches PS-65A, PS-65B, PS-66A, and PS-66B. When the output of either transmitter indicates a flow of 6000 cfm (43 on the recorder scale), then a

low-flow alarm is initiated by PS-65A or PS-66A. Should the output of either transmitter indicate a decrease in flow to 5000 cfm (35 on the recorder scale), a reactor setback will be initiated by PS-65B or PS-66B. The control room air-conditioning unit is also shut down when the cell-ventilation flow decreases to 5000 cfm.

5. Level controls for the filter seal tank

In the event of a low water level in the seal tank, float-type level switches, LS-123A and LS-123B, located in the underground pit with the tank, cause level-control valves LCV-123A and LCV-123B to open. These valves are located in the pit on the two process water supply lines. When they are open, water is added to the tank until the normal operating level is obtained; at that time, LS-123A and LS-123B initiate the closing of LCV-123A and LCV-123B. Should the water level decrease further, a low-level alarm is initiated. If a high-level condition exists, an over-flow line connected to the tank drains the excess water to WC-19. Such a condition is monitored by a high-level alarm.

6. Controls for building containment

The building can be placed in containment,* either manually or automatically, through the use of three separate sets of controls. Within the first set of controls, designated as containment controls, manual actuation is initiated by push button, PB-12, located on the

---

*Containment, as used here, defines that condition when air exhausted from the building leaves via the cell-ventilation system, and all air entering the building is through leakage paths. Heating units, ventilation units, exhaust fans, and air-cooling equipment are shut down and related louvers and/or dampers are closed.

north wall in the control room. Automatic containment will occur when a high radiation level exists either in the building or in the cell-ventilation duct as detected by the containment radiation monitors. A detector located just outside the control room initiates containment if a level of 75 mr/h is detected. A detector sampling air from the cell-ventilation duct at the filter pit initiates containment if a level of 7.5 mr/h is detected. The two radiation detectors transmit signals to two gamma monitors located in the control room. Containment is initiated when setpoints on the gamma monitors are exceeded. The gamma monitors are fail-safe units in that containment is also initiated when the instrument fails.

Building containment can also be effected by the Facility Radiation and Contamination Alarm System. This facility will automatically actuate the building evacuation system if two monitrons or two constant air monitors in the coincidence circuit alarm simultaneously at the high level trip (23 mr/h and 4000 c/m, respectively). Also, the containment system can be actuated by any one of three "manual" evacuation buttons (two in the control room and one outside the west personnel door) (see Section 9.3 for further details).

One additional method of establishing building containment automatically is provided by the fire-alarm system. If a fire alarm occurs in the building, containment is initiated by a relay in the master fire station located outside column A-5, second floor.

In order to restore normal operating conditions, pushbutton PB-14 (control room) must be depressed. This resets all of the building heating and ventilating systems. Afterward, each individual unit may be restarted.

The operation of roof fans (Nos. 2, 3, 4, and 5) which are in service and the basement exhaust fan may be stopped by either PB-13 in the control room or PB-11 at the west personnel door. The start side of PB-13 has been disconnected to prevent starting of the fans from the control room. The start side of PB-11 remains in service to allow restarting of the selected roof fans and the basement exhaust fan following a containment condition initiated from the building fire-alarm system. This action is desired as an additional method of clearing the building of smoke which would result from a fire. However, the smoke-abatement feature (start side of PB-11) is not effective if the radiation detectors of the Cell-Ventilation System or the Facility Radiation and Contamination Alarm System are at any time demanding containment conditions. When the abnormal condition which initiated a fire alarm is corrected, the reset button (PB-14), in the control room, must be depressed before future containment demands from the fire-alarm system are effective.

The truck doors can be opened with the building under containment and without the reset action of PB-14; however, when this is done a member of the Reactor Operations Section should be posted near the doors to close them if an emergency demands such action.

To ensure that the personnel in the ORR control room and offices on the third level north have an independent air supply (relative to the building proper) when the building is in containment, additional instrumentation has been added to the air-conditioning unit serving these rooms. A toggle switch, located on the east section of the inlet duct (in the air-conditioning room), when in the "manual" mode, will permit the inlet damper to remain in the closed position. In the "automatic" mode, the damper position may vary; however, in the event the building is placed in containment, the damper will close. Hence, in both of

modes of operation, there is no exchange of air from the building high bay area to the office and control room area.

If the flow instrumentation (the primary elements located in the cell-ventilation duct, downstream from the filter pit) senses a decrease in flow to 5000 cfm or less, the control room air conditioner will be shut down.

7.2.4. Normal Operation

Continuous operation is maintained for two reasons: (1) to maintain ventilation for experiment cubicles inside the building, and (2) to improve system reliability by having continuous air flow. Any time the reactor is starting up for operation, the cell-ventilation system must be in operation. If the cell-ventilation system becomes unable to remove air at a flow rate greater than 5000 cfm during normal operation, an automatic reduction in power level will occur (setback to N_L).

1. Upon loss of the electric blower during normal operation, the steam blower will start automatically. In the event that this action does occur, Operations personnel are to check the following:
   a. flow rate and pressure drops in the cell-ventilation system at the filter pit for their normal values;
   b. the building pressure manometers for proper readings; and
   c. proper operation of the steam blower, consulting with the stack operator, if necessary. The cause of the electric-blower failure should be determined, and with the aid of the stack operator the electric and steam blowers returned to their normal modes as soon as the cause of the failure is corrected.

The reactor power should not be raised above N_L unless the electric blower is operating and a standby is available.

2. Failure of steam blower

Should the steam blower fail to start and conditions prevent restarting the electrical blower, do the following.

a. Close the filter pit's exit butterfly valve to prevent backflow from the stack into the building. The backflow is a result of a positive pressure condition at the base of the stack interior.
b. Close the inlet butterfly valve to the filter pit also.
c. Initiate steps to get the system into operation as soon as possible.

3. Restarting electric blower

If conditions permit, the electrical blower can be restarted by turning the start switch, ES-124, to the ON position and by pushing the damper reset button, ES-110, for the electrical blower backdraft damper.

The following items must be accomplished in order to reset and stop the steam blower after the electrical blower is restarted. These actions should be coordinated with the stack operator (at the steam blower).

a. Raise the reset level on PV-110 to the UP position.
b. Stop the bleed of air from the pressure regulator in the air line to PV-108 until the pressure as indicated on the gauge is greater than 60 psi and observe that the bleed has stopped.
c. When the steam blower has shut down, observe that the shaft does not rotate in the reverse direction. If the shaft does rotate backwards, the backdraft damper has not closed completely and is allowing backflow to reverse the direction of rotation.

Failure in the instrumentation and control system of the electric and steam blowers could result in both blowers operating concurrently. A dangerous condition of an abnormally high vacuum would then exist if some automatic pressure relief system were not present. Counterbalanced

relief dampers are centrally located in the east wall of the building, approximately 51 ft above the first floor. These dampers open automatically when the building negative pressure (with respect to the outside pressure) exceeds 0.5 in. H_2O. Additional dampers near the south personnel door (first level) will open at a slightly lower pressure should more relief prove necessary.

4. Removing the cell-ventilation system from service

Removing the system from service will be done only while the reactor is shut down and by personnel from the Laboratory Facilities Section and Reactor Operations Section under direction of ORR supervision. The following steps must be taken:

a. Notify hot-cells personnel and those experimenters whose apparatus is affected by the scheduled outage.
b. Close and lock the manual valves on the steam supply line to the steam blower.
c. Close the exit butterfly valve at the filter pit about 4 turns.
d. Turn off the electric blower and make sure the backdraft damper is closed.
e. Immediately close the exit butterfly valve completely to prevent any backflow to the building. WARNING: Any opening made in the duct between the backdraft damper and the stack will probably result in a backflow from the stack through the opening.
f. Close the inlet butterfly valve to the filter pit.
g. Tag both butterfly valves and the electric-blower controls.

5. Restoring the cell-ventilation system to service

When the system is ready to resume normal operation, the steam blower must be started first in order to reset the system and restart the electric blower. Actual manipulation of equipment in the 3039 stack area will be performed by personnel from the Laboratory Facilities Section and the Reactor Operations Section under direction of ORR supervision.

a. Notify hot-cells personnel and those experimenters concerned that the cell-ventilation system will be returned to service.

b. Open the inlet butterfly valve at the filter pit.

c. Open the steam supply valves and the filter-pit exit butterfly valve simultaneously. Bring the steam blower up to speed with the steam valves.

d. Place the electric blower start switch, ES-124, in the "on" position.

e. Push the damper reset button, ES-110, and the electric blower should operate.

f. Reset (stop) the steam blower to standby operation.

6. Routine checks

Since the cell-ventilation system is so vital to reactor operation, certain checks are to made each day. These are:

a. Inside checks.

(1) At the hot cells (Panel A-B)

(a) PI-102 and PI-105 should indicate about 1 in. H_2O negative pressure (with respect to the building's negative pressure). NOTE: If there is no flow, and the negative pressure is greater than 1 in. H_2O, push the reset button on PX-102 or PX-105.

(b) Check PI-122B and PI-122E which should be indicating 20 psig.

(c) Drain moisture from the two instrument-air-line filters.

(2) Basement (Panel C)

(a) Negative pressure in the main duct - at control point, should be indicating close to the setpoint - about 42 percent on the dial (4.2 in. H_2O on PIC-108).

(b) Air pressure indicated on PI-120A04 and PI-120B should be 20 psig and on PI-11 approximately 100 psig.

(c) Drain moisture from the instrument-air-line filters.

(3) Building pressure readings. Record the negative pressure as indicated by the four manometers located in the building. This is a 4 to 12 shift check. The locations are: first level north, first level south, second level west, and third level west.

b. Outside checks

(1) Air flow through the sampling line to the radiation detector. This check ensures that the filter-pit radiation detector is actually sampling a portion of the cell-ventilation flow. This is checked every shift.

(2) Pressure indicators at the filter pit. The pressure differential across each bank of filters is checked each day and the data are recorded in the logbook on Saturday, 4 to 12 shift. These readings determine if any change in air resistance has occurred across the filters requiring a possible filter change.

Filter	Indicator	ΔP clean filter*	ΔP, at filter change*
Prefilter	PDI-112	0.35 in. H_2O	1.20 in. H_2O
Absolute	PDI-113	1.00 in. H_2O	3.00 in. H_2O
Charcoal	PDI-114	$\leq$0.80 in. H_2O	>0.80 in. H_2O
Charcoal	PDI-115	$\leq$0.80 in. H_2O	>0.80 in. H_2O
Absolute	PDI-116	1.00 in. H_2O	3.00 in. H_2O
Flow indicator	PDI-117	0.17 in. H_2O	

*9000 cfm flow rate

(3) Check the water level in the seal-tank pit. Since there is no floor drain in the pit, it is necessary to note any accumulation of water. This is a 4 to 12 shift check.

(4) The following checks should be made by personnel of the Laboratory Facilities Section:

(a) Check the steam turbine; the shaft should be rotating slightly.

(b) The steam bypass valve should be partly open to keep the turbine hot while it is not in operation.

(c) Check the steam pressure gauge. It should indicate pressure of 100 to 125 psig.

(d) Check the fan-bearing housing of the operating fan. If the bearing is thought to be running too hot (determined by feeling), attach a straight-stem thermometer to the bearing housing and read the temperature as often as possible. Normal operating temperature is 70°C (158°F). The bearing temperature should not exceed 90°C (194°F).

7.2.5. Emergency Operation

In the event of a major release of radioactivity in the building, containment would occur automatically. This would consist of the following: (1) the shutdown of all heating and ventilating units in the containment shell; (2) shutdown of all building ventilation fans; and (3) the closing of the truck access doors. Under containment conditions, air leaves the building via the cell-ventilation duct only, and air enters via leakage paths and through special louvers. This system has been designed to maintain the building pressure negative with repect to the building exterior. This will prevent outleakage of contamination to areas outside the ORR building. In addition, equipment and experiment cells serviced by the system are maintained at lower pressures than the building itself.

Should it become necessary to place the system in emergency operation (either automatically or manually) due to a radioactivity release, the Reactor Supervisor or his designated representative should be notified.

When the building is placed in containment, the following steps are to be followed:

1. determine the cause,
2. initiate proper corrective action and/or personnel evacuation if necessary, and
3. if possible, observe that the building pressure is maintained at approximately minus 0.3 in. H_2O.

When conditions permit, the building air-handling system may be reset for normal operation by pushing push button PB-14 in the control room. Then each individual unit may be restarted. The heating and ventilating units are to be restarted prior to starting the roof fans in order to prevent too low a building pressure. Three of the four overhead exhaust fans have been locked out and should not be used while the building air is being exhausted through the emergency cell-ventilation system.

7.2.6. Performance Checkouts

Assurance that the system and its components are functioning properly is maintained by performing routine functional and efficiency tests on a specified frequency.

1. Functional test

   In addition to daily routine checks described earlier, a complete functional test of the system is performed during each quarterly shutdown. This test is accomplished by following the instructions presented on the check sheet included as Example 7.1. Any discrepancy in operation of any part of the system will be resolved before the test is complete.

2. Efficiency tests

   Periodic tests are conducted to measure the effectiveness of the filter-cleanup system. Two specific efficiency tests are performed by personnel of the QA&I Section: (1) radioactive elemental iodine removal and (2) particulate removal using the DOP method (see Fig. 7.4 for iodine injection system located in the ORR basement). The scheduling and data reporting is handled by QA&I.

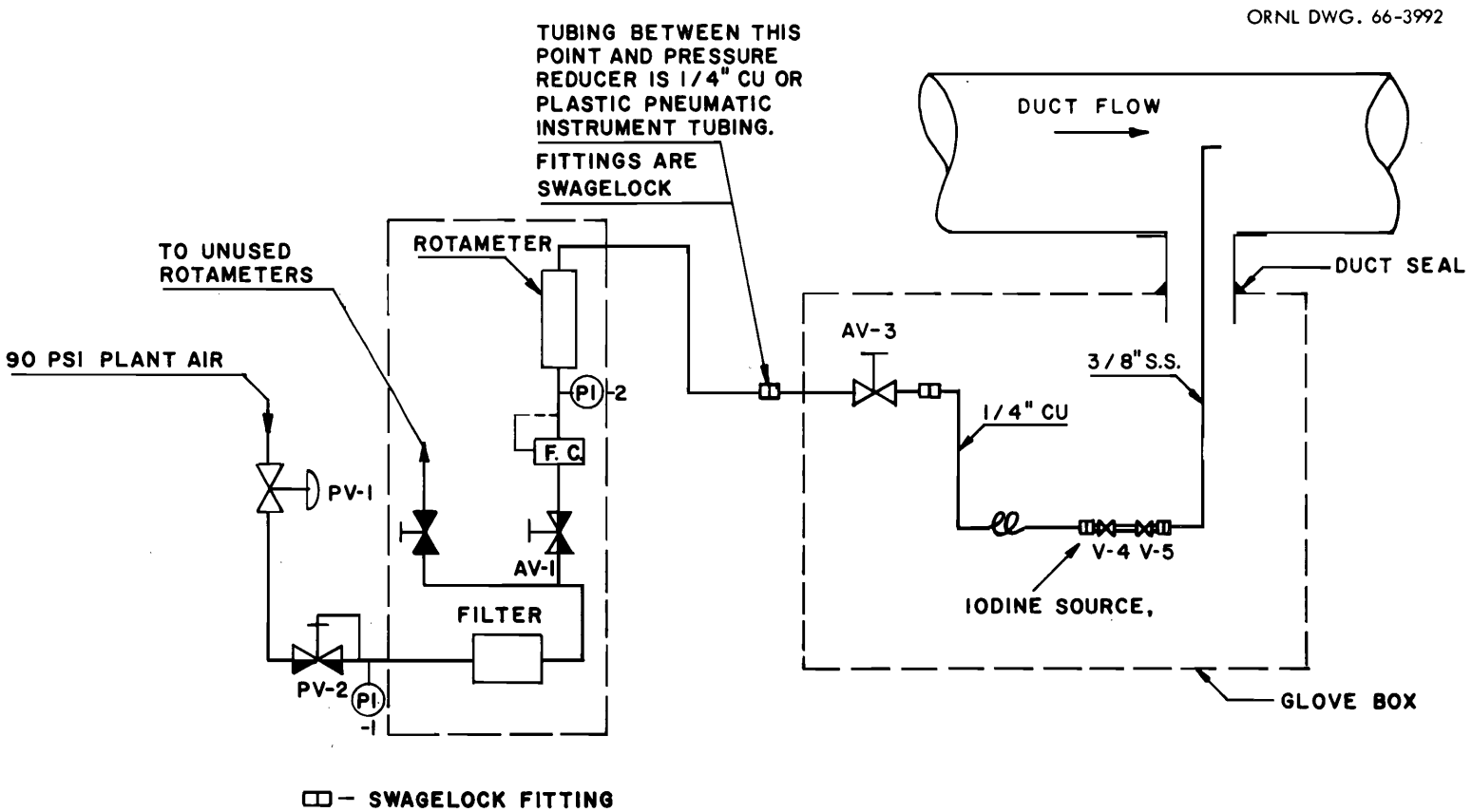

Fig. 7.4. Iodine injection system.

Cell-Ventilation System Quarterly Functional Checks

In addition to the routine checks, a complete functional check is performed during each quarterly shutdown. Satisfactory results must be obtained before reactor operation can be resumed.

	Limits of acceptability or setpoints
1. Placing the building in containment.	
____ a. Notify the chemical operator because the containment gamma monitor alarms will be received at his control room.	
____ b. Place control room air-conditioner damper on AUTOMATIC.	
____ c. Open the east and west truck doors.	
____ d. Using a radioactive source ($\geq$100 mr/h at 6 in.), increase the background at the cell-ventilation-duct chamber at the filter pit until the setpoint at the gamma monitor is reached. The monitor should be observed during this test.	7.5 mr/h
____ e. Instantly, complete building containment should be effected.	
(1) building containment alarm	
(2) containment electrometer alarm	
(4) truck doors should close	

Example 7.1.

	Limits of acceptability or setpoints

____ f. Wait approximately 5 min then record the negative pressure inside the ORR building.

First level, north door	_____	(-0.3 to -0.5 in. H_2O)
First level, south door	_____	(-0.3 to -0.5 in. H_2O)
Second level, west	_____	(-0.3 to -0.5 in. H_2O)
Third level, west	_____	(-0.3 to -0.5 in. H_2O)

The building pressure readings during the test should be between -0.3 and -0.5 in. H_2O. If a minimum -0.3 in. is not obtained, survey the building for excessive leaks. Repair the leaks and repeat the test until the required conditions are met.

____ g. Record the pressure drops across the cell-ventilation filter-pit components.

			ΔP new	ΔP at change
Pre-filters	_____	in. H_2O	0.35	1.20 in. H_2O
Absolute No. 1	_____	in. H_2O	1.00	3.00 in. H_2O
Charcoal No. 1	_____	in. H_2O	$\leq$1.00	>1.0 in. H_2O
Charcoal No. 2	_____	in. H_2O	$\leq$1.00	>1.0 in. H_2O
Absolute No. 2	_____	in. H_2O	1.00	3.00 in. H_2O
Air flow to blower	_____	in. H_2O	0.17	
Air flow to blower	_____	cfm (control room, green pin)		
	_____	cfm (control room, red pin)	(>6000 cfm)	

Example 7.1 (continued)

		Limits of acceptability or setpoints
____	h. The containment electrometer alarm condition should clear when source is removed in step 1.d.	
____	i. Open the west truck doors to prevent putting the building under unnecesarily excessive negative pressure. It will be necessary to unlock and close the breaker on one of the overhead roof fans No. 2 through No. 5. CAUTION: Use only one overhead roof fan for this test. Push the smoke-abatement button, PB-11 (located at the west truck door). The overhead roof fan that is in service (exclusive of the No. 1 and 6 fans) and the basement exhaust fan should start.	
____	j. Using the source as in 1.d, above, obtain containment conditions from action of the building (high-bay area) cell-ventilation gamma monitor. The chamber is located overhead at the west control room entrance. (1) Observe high bay gamma monitor. (2) Check containment electrometer alarm. (3) The overhead roof fan and basement exhaust fan should cease operating. (4) Closure of the west truck doors should occur.	75 mr/h

Example 7.1 (continued)

	Limits of acceptability or setpoints
____ k. Reset PB-14 (located in northwest corner of control room). Building-containment-alarm condition should clear.	
____ l. Using PB-12 (located in northwest corner of control room), obtain containment conditions manually. The building containment alarm should sound.	
____ m. Reset the building containment system to normal operation.	
2. Operation of the steam-driven blower (contact the chemical operator).	
____ a. With the electric-driven blower operating and the steam-driven unit on standby, turn the electric blower off.	
____ b. Main duct high-pressure alarm.	$\geq$-0.3 in. H_2O
____ c. Building low-vent alarm and control-room air-conditioning unit off.	Alarm <6000 cfm Setback <5000 cfm
____ d. The backdraft damper for the blower should open automatically, along with the automatic startup of the blower.	-2 in. H_2O
____ e. Verify that both automatic steam-control valves, PV-108 and PV-110, opened.	

Example 7.1 (continued)

		Limits of acceptability or setpoints
____ f.	Steam blower operating properly.	
____ g.	Backdraft damper for the electric blower closed.	<7 in. H_2O on discharge side.
____ h.	Close down on the overhead chain valve on the steam supply line. Observe steam-pressure indicator PI-118. When the pressure decreases to approximately 75 psig, the turbine steam low-pressure alarm should occur.	
____ i.	Continue closing down on the chain valve on the steam supply line. Observe steam-pressure indicator PI-118. When the pressure decreases to approximately 45 psi, the low-air-flow-to-stack alarm should occur. Return the overhead steam valve to the fully open position.	
____ j.	Record the building pressures.	
	First level, north door _____	
	First level, south door _____	
	Second level, west _____	
	Third level, west of hot cell _____	
____ k.	Filter ΔP readings.	
	Pre-filters _____ in. H_2O	0.35 to 1.20 in. H_2O
	Absolute No. 1 _____ in. H_2O	1.00 to 3.00 in. H_2O
	Charcoal No. 1 _____ in. H_2O	approximately 0.8 in. H_2O
	Charcoal No. 2 _____ in. H_2O	approximately 0.8 in. H_2O

Example 7.1 (continued)

		Limits of acceptability or setpoints
Absolute No. 2 _____	in. H_2O	1.00 to 3.00 in. H_2O
Air flow to blower _____	in. H_2O	0.17 in
Air flow to blower _____	cfm (control room, green pin)	
_____	cfm (control room, red pin)	(>6000 cfm)

3. Operation of the seal tank.

____ a. Add water to the seal tank through the manual valve which is located in the seal-tank pit.

____ b. The seal-tank high-level alarm should occur.

____ c. Stop the water addition by closing the manual valve (in a, above).

____ d. The alarm should clear after the overflow has drained the water to the required level.

____ e. On the manifold, close the water supply to the seal tank.

____ f. Reduce the vacuum at WC-19 by closing the valve in the line between WC-19 and the NOG system.

____ g. The seal-tank low-level alarm should occur. Normal -0.75 in.

____ h. Restore the manual water valve to its normal open position.

____ i. Restore the normal vacuum at WC-19.

____ j. The low-level alarm should clear.

Example 7.1 (continued)

Limits of acceptability or setpoints

____ k. At the basement auxiliary panel, close down on the air supply valve and observe PT-111. When the pressure decreases to approximately 75 psig, the low-instrument-air-pressure alarm should occur.

4. Contact tank farm personnel and request the following.

____ a. Restart the electric blower.

____ b. Main duct low-pressure alarm annunciator in the ORR control room should sound.

____ c. Reset the steam blower to standby operation by:

(1) Raising the reset lever on PV-110 to the UP position and

(2) stopping the bleed of air from the pressure regulator in the air line to PV-108 until the pressure, as indicated on the gauge, is greater than 60 psig and observe that the bleed has stopped.

____ d. Verify that the backdraft damper is closed. (If it is not completely closed, the impeller and shaft will rotate in the reverse direction.)

5. Restart control room air-conditioning unit.

Should the results of any part of these tests not fall within the operating limits, any problems shall be resolved and the test repeated if warranted prior to the approval of the system for normal operation.

Reviewed and Approved by Shift Supervisor _____

Example 7.1 (continued)

7.3. Building 3042 Hot-Cell Ventilation System*

References: ORNL Dwg. D-55384
D-55354
D-55355

7.3.1. General

A schematic drawing (Fig. 7.5) shows the flow of air through the ORR hot cells and into a duct which leads to the stack area. Inlet air to the cells is drawn through a common intake filter (No. 9). Because the cells are connected at the common intake filter, pneumatic two-position valves (Nos. 1S and 1N) and check valves (Nos. 2S and 2N) in each cell duct prevent flowback from one cell to the other or to the operating area. Opening of the two-position pneumatic valves is accomplished by manually resetting PX-102 or PX-105 instruments when a negative pressure in the cells of approximately 1 in. H_2O is sensed by the pressure transmitters PT-102 and PT-105 and indicated on cell pressure gauges PI-102 and PI-105. Control air of 3 to 5 psig acts to hold the pneumatic valve open by maintaining an air pressure of 20 psig on the diaphragms of each valve (through PX-102 and PX-105).

Cell pressure is controlled by regulating valves (Nos. 5S and 5N) in the cell exhaust lines ahead of the absolute filters. Gradual opening of these valves over an extended period of time is expected in order to compensate for the increased pressure drop through the air filters as indicated on PDI-102 and PDI-105. Valves (Nos. 6S and 6N) at the outlet of the absolute exhaust filters (Nos. 8S and 8N) should remain wide open

*From ORR Hot Cells Memo No. 9

ORNL DWG. 66-3993

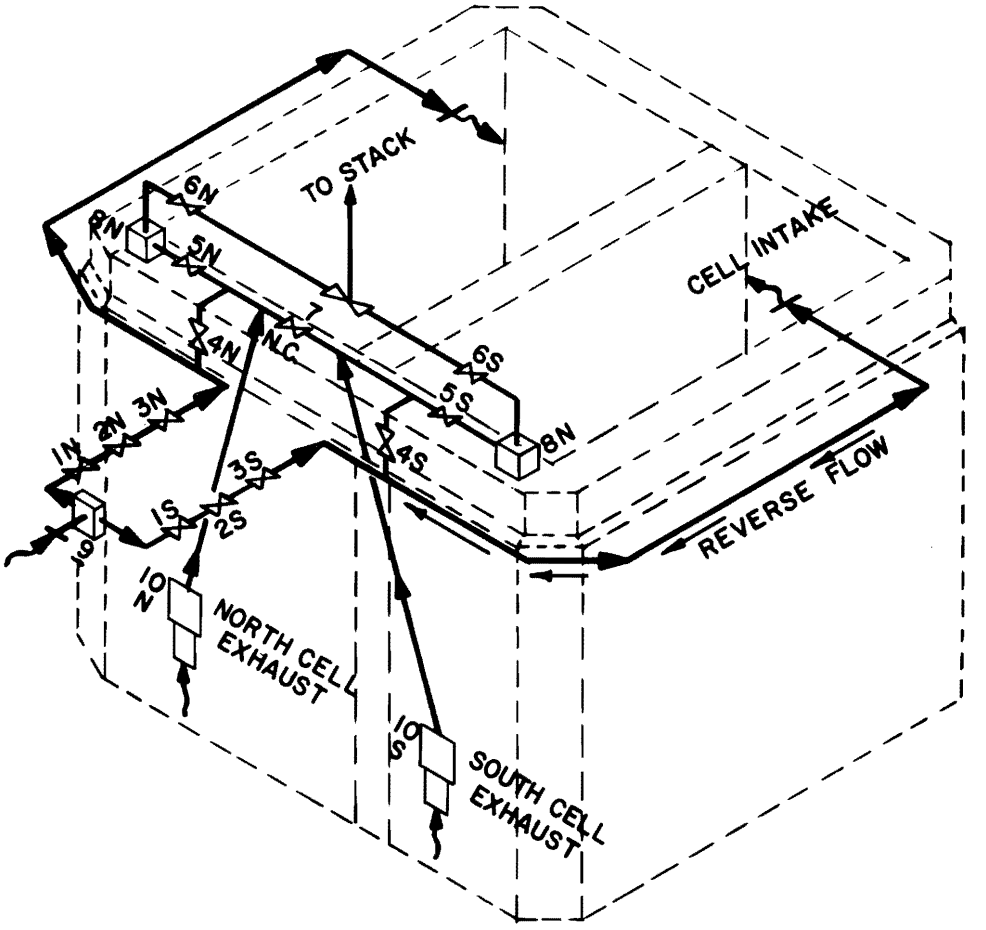

1. PNEUMATIC EMERGENCY CONTROL VALVE.
2. VACUUM BREATHER CHECK VALVE.
3. INTAKE REGULATING VALVE.
4. BY-PASS VALVE.
5. EXIST REGULATING VALVE.
6. CELL EXIT FILTER VALVE.
7. CELLS BY-PASS VALVE.
8. HIGH EFFICIENCY FILTERS. EXHAUST FROM CELL.
9. INTAKE FILTERS.
10. IN-CELL ROUGHING FILTER AND CHARCOAL TRAPS.

Fig. 7.5. Ventilation system at ORR hot cells.

except during filter changes. When the exit regulating valves (Nos. 5S and 5N) are wide open, cell pressure must be maintained by partial closing of intake regulating valves (Nos. 3S and 3N) on the cell intake ducts.

Provisions have been made for an increase in air flow when opening the cell door or removing the cell roof plug. This is done by manually opening the bypass valves (Nos. 4S and 4N), which allows bypass of the in-cell filters, causing air to be exhausted from the cells through the cell-air intake ducts (reversed flow) through valves 4S and 4N, 5S and 5N, and the absolute filters. The maximum exhaust will be obtained by closing the intake regulating valves (Nos. 3S and 3N) when the bypass valves are opened.

A photograph of the panel for the ventilation system is shown in Fig. 7.6. All indicating gauges, transmitters, etc., are appropriately marked.

7.3.2. General Operating Conditions for the Systems

1. The cells will be maintained at -1.00 in. H_2O.
2. The negative pressure will be maintained by regulating valves Nos. 5S and 5N. Valves 1S and 1N, 2S and 2N, 3S and 3N, and 6S and 6N will be opened. Valves Nos. 4S and 4N and 7S and 7N will be closed during normal operation.
3. When valves Nos. 5S and 5N are at their maximum open positions, and -1.00 in. H_2O cannot be obtained, the intake regulating valves (Nos. 3S and 3N) should be throttled to get the desired negative pressure.
4. When opening the west cell doors or removing the roof slab, bypass valves Nos. 4S and 4N will be opened and intake regulating valves Nos. 3S and 3N will be closed to provide the maximum ventilation rate for the cell being worked on. The cell will be returned to normal operating conditions after closing the appropriate openings.

Photo 2229

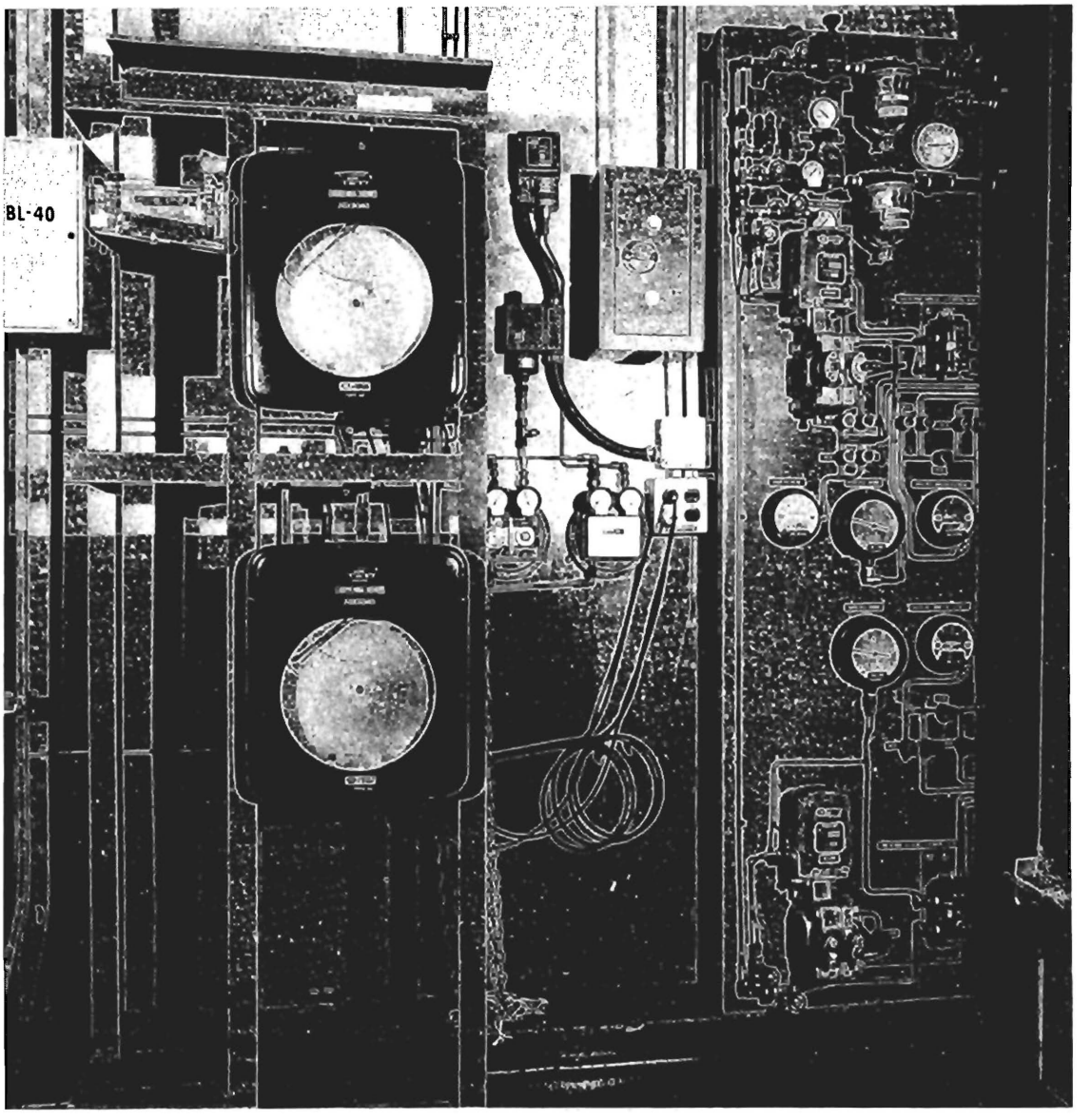

Fig. 7.6. Hot cell ventilation instrument panel.

7.3.3. Ventilation Alarm Conditions

A high-pressure alarm is initiated when the cell negative pressure approaches -0.10 in. H_2O. The following will occur when the alarm is received.

1. A local alarm will sound.
2. The red light on the east wall of the cell will come on.
3. An alarm will be received in the ORR control room.
4. A light will appear on the relay and cell pressure-indicating cabinet designating the appropriate cell.
5. A high-pressure signal will be initiated by the pressure switches (PS-102, north cell, and PS-105, south cell) and the pneumatically operated emergency intake valve will close and seal off the cell-air intake flow.

7.3.4. Action to Be Taken if an Alarm Occurs

1. Acknowledge the alarm by depressing the silence button on the instrument panel. This will silence the horn but the alarm conditions under Section 7.3.3, items No. 2, 3, and 4 will remain until the negative pressure reaches -0.10 in. H_2O.
2. Check the Foxboro instrument and recorders to verify high-cell pressure. Instruments are marked "north-cell vacuum" and "south-cell vacuum."
3. In case of loss of cell ventilation, the back-up (normal off-gas) system will automatically take over when the cell negative pressure reaches -0.4 in. H_2O. This can be verified by checking the Foxboro instrument and recorders. When the cell ventilation returns to normal, the normal off-gas system will be valved out automatically.

4. The pneumatically operated intake valve, Section 7.3.3, item No. 5, should remain closed until the cell ventilation returns to normal. This can be determined by checking PI-102 and PI-105. When they indicate less than 0.50 in., the cell ventilation is still inadequate.
5. When PI-102 and PI-105 indicate approximately -2.0 in. H_2O, open the pneumatically operated intake valves by resetting PX-102 and PX-105 (three-way valves located on the cell panel). Resets are appropriately marked. The cell pressure should be approximately -1.0 in. H_2O after opening the intake valves.
6. If the Foxboro recorders are indicating -1.0 in. H_2O and PI-102 and PI-105 are verifying these readings, it can be assumed that a false alarm has been received. In this case, no action is necessary. Hot Cell Operation supervision should be contacted so that the necessary checks and repairs can be made.

7.4. Fire-Protection System at the ORR Cells*

References: ORNL Dwg. D-50635
D-50636
D-46999

7.4.1. Description

The nature of the work in the ORR hot cells demands a permanent-type fire-protection system at the hot cells. This system consists of fire-detecting and fire-extinguishing equipment.

The fire-detection system consists of a detector, a fire-indicating cabinet, and a zone-indicating cabinet. The detector consists of a sensitive cold-cathode gas-discharge tube located inside each cell, and the flow of current through the detector is controlled by two ionization chambers. The air in the two chambers, one sealed and the other open to the atmosphere, is ionized by a source of alpha-emitting material, and the current in the chambers is electrically balanced. When the smoke or combustion gases enter the open chamber, the electrical conductivity of the chamber is decreased, causing the two chambers to be electrically unbalanced which causes current to flow through the cathode tube. This flow of current initiates the signal that results in placing the system in an alarm condition. A horn in the operating area will sound; a warning light located on the east wall of the cells will come on; and signals will be sent to the ORR control room and the Fire Department. The signal to the Fire Department is directed through the fire and containment loop which places the ORR building in containment.

---

*From ORR Hot Cells Memo No. 10.

The fire-indicating cabinet, located on the west wall, consists of a panel of three lights marked power, fire, and trouble. The zone-indicating cabinet located at the right of the fire-indicating cabinet consists of a panel of two lights marked North cell fire and South cell fire. The detector giving the alarm will be indicated on the zone cabinet.

The fire-extinguishing system in the north cell consists of one 30-lb cylinder of dry chemical and associated piping. The cylinder (outside the cell) is connected to piping which terminates inside the cell. When the cylinder is actuated, the dry chemical will be discharged into the cell via two nozzles. The south cell has the same system plus a 30-lb cylinder of Met-L-x (graphite) for metal fires. The Met-L-x cylinder is connected to the cell by a flexible line with a nozzle extending into the center of the cell which can be remotely directed by the manipulator. The Met-L-x cylinder will only be placed in service when there is a potential for metal fires in the cell. All cylinders are equipped with a remote actuating device for discharging the cylinders. NOTE: Be sure these materials are kept out of the ORR pool water.

The release mechanisms are appropriately marked and located near the hot-cell windows for convenience and expediency when operating.

7.4.2. Indications of a Fire in a Hot Cell

In summarizing the fire-protection system, the following events will occur when an alarm is initiated by either of the fire detectors.

1. A local alarm will sound.
2. The red light on the east face of the cell will come on.
3. A light will come on at the fire-indicating unit, which is located on the west wall, indicating which cell.
4. A light will come on at the zone-indicating unit indicating which cell.
5. An alarm will be received in the ORR control room.
6. An alarm will be received at the Fire Department.
7. The ORR building will be placed in containment.

7.4.3. Actions to Be Taken in the Event of a Hot Cell Fire

The following action should be taken on receiving a fire alarm from the cells.

1. Check the cell to determine that the alarm is real.
2. If there is a fire in the cell, evaluate the seriousness of the fire.
3. If flames have spread and fire appears to be out of hand, discharge dry powder by actuating the release mechanism above the window.
4. If the fire is in the south cell and is a metal fire, grasp the flexible fire hose with a manipulator and direct the nozzle toward the fire. Actuate the release mechanism on Met-L-x located to the right of the south cell window.
5. After extinguishing the fire, silence the alarm by pressing the annunciator button.
6. All alarms received, items 2 through 7 will remain until the particular detector giving the signal has cleared. When the detector clears, the alarms can be cleared by opening the fire-indicating cabinet and flipping the power switch off and back on. The switch is marked "alarm reset."
7. Check the cell ventilation to determine if the cell operating pressure has increased due to smoke-plugged filters. Adjust the damper to maintain 1 in. negative pressure in the cell (see ORR Hot Cells Memo 9).
8. If the alarm is false, actuate the annunciator panel located west of the cell to silence the horn.
9. Contact the Fire Department and ORR control room and give conditions in the cell.

Evaluating the fire hazard within the cell will depend on the individual. The decision to actuate the cylinders is most difficult when there is a small fire which could either spread and create an incident or burn itself out with no damage to the cell. Common sense and judgment should prevail when making this decision. If, in the judgment of the observer, the fire stands a chance of spreading, then by all means the dry chemical should be discharged into the cell. If there is smoke and little flame or no flame, discretion should be used before discharging the dry chemical. The smoke or a small fire should be observed closely, and the observer should stand by prepared to discharge the cylinder if needed. The dry chemical used (sodium bicarbonate) will generally spread all over the cell and may create a contamination problem during cleanup. For this reason, the cylinders should not be needlessly discharged into the cells.

7.5. Emergency Cooling for the ORR

7.5.1. Introduction

The emergency core cooling system for operation of the ORR at 30 MW includes a requirement that at least 750 gpm of forced water cooling be maintained for a period of at least 30 min after shutdown to prevent possible overheating of the core due to heat produced by fission-product decay. Several devices have been installed to guarantee this coolant flow.

7.5.2. The dc Pony Motors

References: ORNL Dwg. D-37566-R1
D-37944-R3
D-39885
D-39886
D-43637-R1
E-20393-D-D12-D

1. Description

Battery-operated pony motors rated at 0.69 hp with 30 V input are directly coupled to the shafts of the primary pumps at the outboard ends. In the event of ac power outage, these motors operate the pumps at a reduced pumping rate to supply coolant to remove afterheat from the shutdown reactor. Each dc motor is connected to its own bank of storage batteries. Each battery bank, in turn, is connected to its own continuously operating battery charger. Battery banks 1 and 2 normally contain 18 batteries, while battery bank 3 has but 16.

During routine operation, the pony motors necessarily turn at the same speed as the main pumps since they are directly coupled to the shafts. When ac power to the main pump motors is interrupted, the pumps coast down until the operating speed of the pony motors is reached. At this speed the dc motors will continue rotation of the pump impellers. This transfer of driving force for the pumps is accomplished without switches or relays and without change in the mechanical linkage. Since the electrical connection between the

battery bank and the dc motor is not interrupted during normal operation of the pumps, a small current drain (approximately 7.5 A) exists at the normal operating speed even when the pony motors are not carrying the load of operating the pumps. Therefore, the battery chargers must supply a continuous trickle charge to the batteries even during normal operation. When the dc motors are supplying the driving force for the main pumps, the current demand increases to 35 A with the current output of the battery chargers limited to 28 A for units Nos. 1 and 2 and to 100 A for unit No. 3. To be considered reliable, each dc unit (pony motor, batteries, etc.) must be capable of supplying a coolant flow of 500 gpm for one-half hour.

Since the pony motors are maintained "on stream," they are considered to be the most reliable method of supplying emergency cooling. The importance of maintaining their operability and reliability was the chief guide in preparing the following procedures and the checks and tests described herein.

2. Monitoring by annunciator stations

Two types of monitoring are included in the instrumentation of the systems. In the ORR control room, separate annunciator stations monitor the following conditions for each dc unit: position of the disconnect switch, S-1, between battery charger and batteries; position of the disconnect switch, S-2, between batteries and motor; ac voltage to the battery charger; and high-low voltage of the battery bank and high-low amperage drawn by the motor. Under normal conditions (i.e., disconnect switches, S-1 and S-2, closed; 240-V supply to charger; and battery volt-age and motor current within specified limits), all associated annunciator stations will be dimly lighted. Abnormal conditions will illuminate the "red" section of the annunciator and sound an audible signal. In each of the cells at the primary pump house containing a main pump and dc motor, charger, and battery bank with associated circuitry, a panel on the relay-wire

terminal box provides information locally when the high-low limits on voltage and current have been exceeded. An abnormal condition seals in a circuit illuminating a warning light, at this location, which stores the information. A manual reset button is provided to restore this monitor to normal when the abnormal condition clears.

Figure 7.7 provides a single-line schematic of the monitoring system for the dc pony motor units.

3. Minimum requirements

a. The minimum requirements for dependability of dc units 1 and 2 are as follows (assuming primary pump running):

(1) At least 16 batteries must be in service in each bank. (The normal complement is 18.)

(2) All batteries in service must have a specific gravity (corrected for temperature) of 1.175 or greater. (1.175 represents about 60% full charge.)

(3) The battery charger must be operating to provide the needed charge.

(4) The control-room annunciator for the unit must indicate all clear.

(5) The suction and discharge valves at the primary pump associated with the unit in operation must be open.

(6) The motor amperage must be >5 and <10 A.

(7) The battery charger amperage must be >0 and <28 A.

(8) The battery voltage must be >37 and <41 V. Battery voltages lower than specified here may be approved by the Reactor Supervisor or his designated representative.

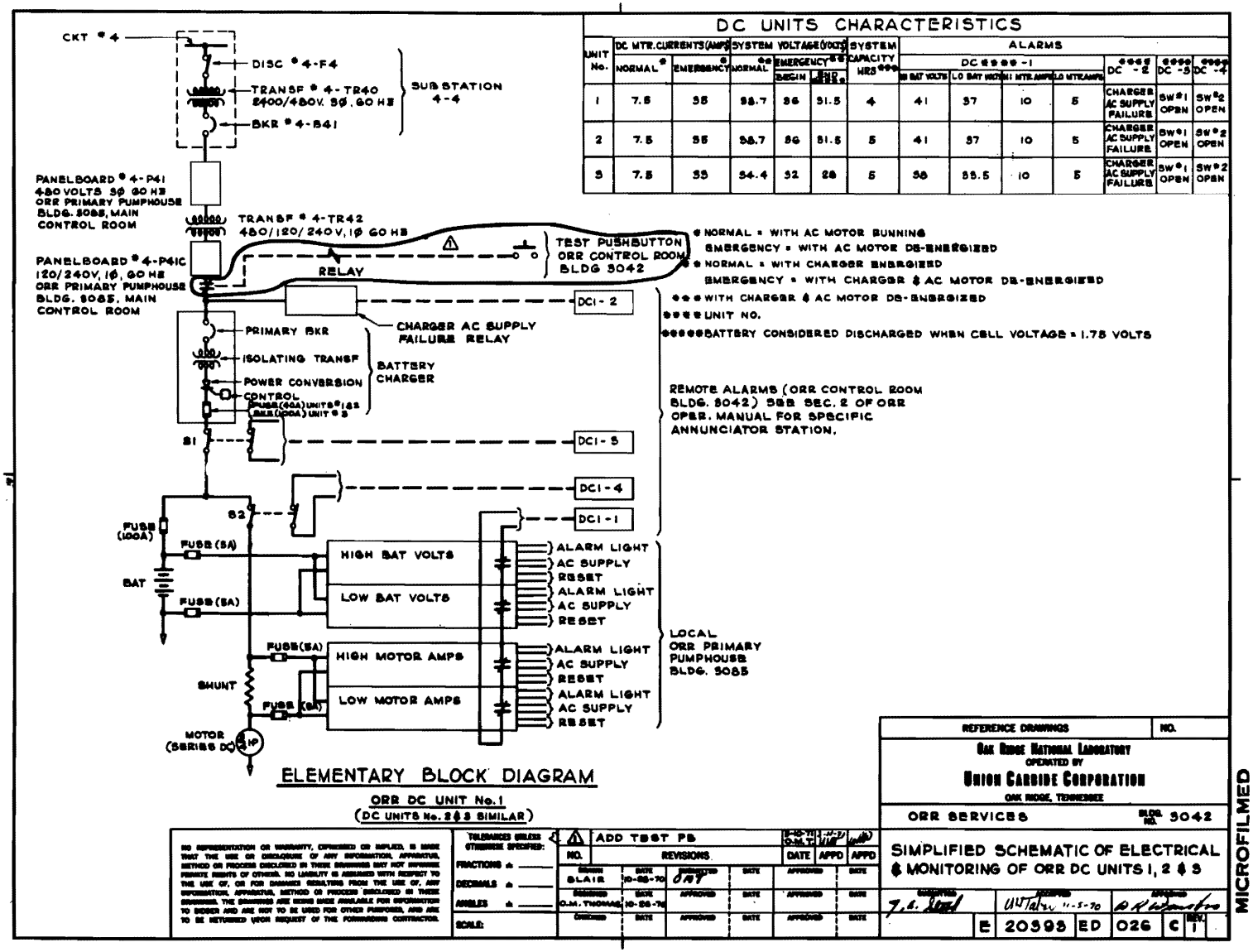

Fig. 7.7. Monitoring system for dc units 1, 2, and 3.

b. The minimum requirements for dependability of dc unit 3 are as follows:

(1) The normal complement of batteries of dc unit 3 is 16 and any deviation requires the approval of the Reactor Supervisor or his designated representative.

(2) All batteries in service must have a specific gravity (corrected for temperature) of 1.175 or greater. (1.175 represents about 60% full charge.)

(3) The battery charger must be operating to provide the needed charge.

(4) The control-room annunciator for the unit must indicate all clear.

(5) The suction and discharge valves at the primary pump associated with the unit in operation must be open.

(6) The motor amperage must be >5 and <10 A.

(7) The battery charger amperage must be >0 and <100 A.

(8) The battery voltage must be >33.5 and <38 V for 16 batteries. Battery voltages lower than specified here may be approved by the Reactor Supervisor or his designated representative.

4. Operation

a. Prior to startup of the reactor and after the main pump has been placed in service, the following steps should be accomplished at the pumphouse.

(1) Close the "battery-to-motor disconnect," S-2 (normally opened during shutdown).

(2) Reset the push button on the local high-low voltage and current monitoring panel.

(3) Determine that all alarms are clear and that the voltages and amperages are normal (see minimum requirements). If readings are not normal, an investigation should be initiated immediately.

b. During steady-state operation, routine checks of voltage, amperage, and specific gravity are to be made as outlined below.

(1) Voltage and amperage checks

(a) Shift checks

The battery voltage and amperage readings are to be recorded by the operator performing the shift checks. Motor voltages and amperages are to be checked. See the table below for possible causes of trouble. Any abnormal condition(s) should be reported to the supervisor immediately.

Probable Causes of Abnormal Readings

Abnormal condition	Check for
Low voltage	1. Failure of ac supply
	2. Failure of charger (dc output)
	3. Motor fuse open
	4. Failure of charger controller relay ("CR")
High voltage	1. Failure of charger controller voltage sensitive relay ("TVR")
	2. Charger controller relay ("CR") contact in line "X" welded closed
Low motor current	1. Open circuit to motor (such as broken brush)
High motor current	1. Electrical short in motor

(b) Daily checks

The operator performing the day-shift checks, in addition to the above voltage and amperage checks, will also verify that each dc system is reliable by performing the daily test of the pony motor systems. This check is accomplished by pushing the "test" button on the vertical panel in the control room. The following observations are to be made while the test button is depressed.

(aa) The control-room voltmeter for the unit being tested should show a steady drop in voltage (this may require two or three minutes) indicating that current is passing from the batteries to the motor. This results because the actuation of the test button temporarily isolates the battery charger from the batteries. The "ac power" annunciator will sound, and the voltage may drop below the alarm point thereby actuating the "high-low volts and amps" annunciator. Restoration of the "ac power" annunciator is automatic with the release of the test button; while the "low voltage" reset button at the pump cell requires a manual reset.

(bb) The control-room ammeter for the unit being tested should indicate approximately 7.5 A current.

Should the above conditions not be met, then an immediate investigation is to be initiated. Some possible observations and the most likely causes are as follows.

Probable Causes of Abnormal Readings

Abnormal condition	Check for
Constant voltage while test button is depressed	Open fuse in battery switch
Zero current	Open fuse in battery safety switch or open cell in battery bank
High or low current	See preceding table of causes of abnormal readings

(2) Specific-gravity checks

(a) The day shift checks the specific gravity of all batteries and records the lowest reading in the operating log.

(b) Evening and night shifts check the specific gravity of a single battery in the sequence 1, 2, . . . 16 or 18. A check of the operating log will determine which battery is to be checked. NOTE: The tops of the batteries for the dc pony motors have been replaced with special tops to prevent loss of water during high charging rate. It is important to determine that these caps are securely fastened following checks of specific gravity.

c. The dc units are removed from service during shutdowns after the reactor system has been cooled to near the pool-water temperature and immediately after shutting down the main pumps to prevent discharging the batteries while emergency cooling is not needed. This requires that the disconnect, S-2, between the

battery bank and the dc motor be opened, and the disconnect, S-1, between the charger and the battery be kept normally closed. The ORR Shutdown Checklist, Example 8.13, Section 8, includes these steps as part of the shutdown checks.

d. Quarterly tests for dc units are described in Example 7.7.

e. During unscheduled shutdowns (power outages), the conditions which will prevail cannot be predicted with sufficient accuracy to provide a detailed procedure. The following guidelines should be used to help decide the proper course of action.

   (1) The dc units should be left in service (ready to pump water if needed or pumping water in case of TVA power outage) following <u>any</u> shutdown (scheduled or unscheduled) for a minimum period of 30 min. This duration will provide after-heat protection.

   (2) The dc units should be removed from load service by opening disconnect S-2 between the battery bank and the dc motor as soon as it is completely safe to do so, i.e., after cooling has been supplied for 30 min following the reactor shutdown.

   (3) The main pumps can be returned to service without change in the status of the dc units if the power outage is of short duration; however, the dc units must remain in service for a minimum of 30 min irrespective of the duration of the power outage. Restarting the main pumps can be accomplished by closing all three motorized valves (electric shutdown pump running as verified by the flow meter in the control room) and then restarting the main pumps. It will be necessary to reset the push button on the local high-low voltage-current monitoring panel.

5. Non-routine testing

Once per year, during a quarterly shutdown, a load test is performed on each battery bank (Nos. 1, 2, and 3) to determine the load-bearing characteristics of the batteries. Normally, tests for the units are scheduled so that no two units undergo the load test during the same reactor shutdown period. In all cases, tests will be performed under the direction of ORR supervision.

a. Preparation

(1) The reactor primary system must be in a condition to circulate water at a low ($\leq$2000 gpm) flow rate.

(2) Reliable hydrometers must be available.

(3) A reliable temperature monitor must be available (do not use a mercury thermometer).

(4) The "blocks" in the ORR control room on the 1000-gpm, electric-motor-driven shutdown pump must be removed.

b. Load test for Nos. 1 or 2 dc battery bank

The procedure for this test is included as Example 7.2.

c. Load test for No. 3 dc battery bank

The procedure for this test is included as Example 7.3.

d. Recharging batteries after completing load test

The procedure for this test is included as Example 7.5.

Load Test for No. 1 or No. 2 dc Battery Bank

1. Pull test blocks CP-15, CP-16, and CP-17 in the control room.
2. Open the motorized valve on No. 1 or No. 2 primary pump using the local controls. The key to these controls is kept in the "key box" in the ORR control room.
3. Check and record the specific gravity on all batteries in the bank being tested before starting the test.
4. Place the battery-to-charger disconnect, S-1, in the OFF position.
5. Place the battery-to-motor disconnect, S-2, in the ON position to start the pump.
6. Record the following readings on the data sheet (Battery Load Test, Example 7.4) at start of the test and every 20 min during the test:
   a. time,
   b. load voltage - battery,
   c. load amps - battery,
   d. specific gravity on cell No. 1 (battery No. 1), and
   e. water flow.
7. Record the specific gravity on all batteries of the bank being tested every 20 min on the data sheet (Cell Characteristics During Discharge No. 1 dc Batteries).
8. Check the dc motor for overheating and performance during test.
9. Continue the checks for 60 min. The battery voltage should remain above 31.5 V and the specific gravity should not decrease below 1.175. Discontinue the test after 60 min; then place the battery-to-motor disconnect (S-2) in the OFF position to stop the pump.
10. Do <u>not</u> adjust charger amps.
11. Close the motorized valve.

Example 7.2

Load Test for No. 3 dc Battery Bank

1. Pull test blocks CP-15, CP-16, and CP-17 in the control room.
2. Open the motorized valve on No. 3 primary pump using the local controls. The key to these controls is kept in the "key box" in the ORR control room.
3. Check and record the specific gravity on all batteries before starting the test.
4. Place the battery-to-charger disconnect, S-1, in the OFF position.
5. Place the battery-to-motor disconnect, S-2, in the ON position to start the pump.
6. Record the following readings on the data sheet (Battery Load Test, Example 7.4) at start of the test and every 20 min during the test:
   a. time,
   b. load voltage - battery,
   c. load amps - battery,
   d. specific gravity on cell No. 1 (battery No. 1), and
   e. water flow.
7. Record the specific gravity on all batteries (No. 3 bank) every 20 min on the data sheet (Cell Characteristics During Discharge No. 1 dc Batteries).
8. Check the dc motor for overheating and performance during test.
9. Continue the checks for 60 min. The battery voltage should remain above 28 V and the specific gravity should not decrease below 1.175. This should provide flow for $\geq$30 min after the specific gravity has decreased below 1.175. Discontinue the test after 60 min; then place the battery-to-motor disconnect, S-2, in the OFF position to stop the pump.
10. Do <u>not</u> adjust charger amps.
11. Close the motorized valve.

Example 7.3

BATTERY LOAD TEST

No. ____ dc Batteries

Date _____

Supervisor _____

Time (min)	Battery Load Voltage	Battery Load Amperes	Specific Gravity Cell No. 1	Coolant Flow (gpm)	Remarks
0					
20					
40					
60					
80					
100					
120					
140					
160					
180					
200					
220					
240					
260					
280					
300					
320					
340					
360					

Example 7.4.

Cell Characteristics During Discharge No. 1 dc Batteries

Date _____

Supervisor _____

Specific Gravity of Cells (Left to Right)

Time (min)	Bank	Cell									Remarks
		1	2	3	4	5	6	7	8	9	
0	Upper										
	Lower										
40	Upper										
	Lower										
80	Upper										
	Lower										
120	Upper										
	Lower										
160	Upper										
	Lower										
200	Upper										
	Lower										
240	Upper										
	Lower										
280	Upper										
	Lower										
320	Upper										
	Lower										
360	Upper										
	Lower										

Example 7.4. (Continued)

Recharging of No. 1, 2, or 3 dc Batteries

1. Place the charger in the EQUALIZE position.
2. Place the battery-to-charger disconnect, S-1, in the ON position.
3. Record the following readings every 2 h on the data sheet (Battery Charging Test, Example 7.6):
   a. time,
   b. battery No. 7 temperature °F (do not exceed 110°F),
   c. battery voltage,
   d. charger voltage,
   e. battery amps, and
   f. specific gravity on battery No. 1.
4. If the battery temperature increases to 110°F, change the charger to the FLOAT position.
5. When the specific gravity of the batteries is 1.175, change the frequency of readings to every 4 h.
6. Allow the charger to stay on EQUALIZE until the specific gravity is $\geq$1.190, then place the charger in the FLOAT position.

BATTERY CHARGING TEST

No. ___ dc Batteries

Date _____

Supervisor _____

Time	Cell No. 7 Temperature (°F)	Battery Volts	Battery Amps	Charger Volts	Specific Gravity Cell No. 1	Remarks

Example 7.6.

Procedure for Testing the Emergency Water-Pumping Components

General

At the start of each quarterly shutdown, the emergency pumping facilities for the reactor primary water system must be checked for operability and dependability under various conditions. In essence, these conditions simulate emergency actions which occur in the event of a loss in electrical power and/or a decrease in water flow through the core. These pumping facilities are the three dc pony motors and the emergency-power operated shutdown pump. Perform these checks in the order in which they are listed below. Initial each step, record the actual flow rates at which the particular unit being tested was actuated, and report any abnormalities. Reference print No. RC2-1-3E.

Preparatory Activities

___ 1. After the reactor has been shut down, maintain the normal water-flow rate until the reactor primary water is cooled sufficiently to permit in-core work (exit temperature of the reactor water equal to that of the pool water or a few degrees less). Cooling should be performed slowly by lowering the inlet setpoint in steps. Normally, 30 min are adequate to avoid thermal shock to the reactor tank.

___ 2. Place the "battery-to-motor" disconnects (S-2) for each of three pony motors in the OFF mode (levers in the down position). The control-room annunciators (S-2, dc-1; S-2, dc-2; S-2, and dc-3) should alarm.

Tests of the Reactor Primary System Check Valves

This test must be done carefully to prevent shocking the system by stopping or starting the main pumps at the wrong time. Simultaneous stopping of the pumps with the exit valves open is not detrimental to the system. The observer at the pump house should check carefully for reverse rotation of the pump shafts.

___ 1. Post an observer at the reactor primary pump house.

___ 2. Simultaneously de-energize all three primary pump motors. (This step will require three hands.)

___ 3. The electrically driven shutdown pump should start. Check if affirmative.

___ 4. Flow should decay to approximately 1200 gpm. Record actual flow observed after the pumps stop rotating. Actual flow _____.

___ 5. No. 1 main pump stopped completely (observe shaft).

___ 6. No. 2 main pump stopped completely (observe shaft).

___ 7. No. 3 main pump stopped completely (observe shaft).

___ 8. In turn, close the exit valves indicated below while observing the flow which would indicate check-valve leakage, i.e., by varying.

a. No. 1 exit valve closed _____, flow rate _____.

b. No. 2 exit valve closed _____, flow rate _____.

c. No. 3 exit valve closed _____, flow rate _____.

Test for the Electrically Operated Shutdown Pump

___ 1. Re-establish flow by restarting the No. 1 pump. The flow rate should increase to approximately 10,000 gpm. Stop the electrically operated shutdown pump.

___ 2. Using the No. 1 motorized valve, decrease the flow rate to approximately 1200 gpm. The electrically operated shutdown pump should start. Actual flow _____ gpm.

___ 3. Fully shut the No. 1 motorized valve, then de-energize the No. 1 pump.

Tests for the Pony Motors

___ 1. Restore the three battery-to-motor disconnects to the ON mode (to energize the pony motors) and place the three battery-to-charger disconnects in the OFF mode.

___ 2. Open the three motorized valves and remove the electrically operated shutdown pump test block to check the flow rates supplied by the three dc motors for approximately 30 min. Maximum flow _____ gpm; minimum flow _____ gpm.

___ 3. The test blocks (Nos. 15, 16, and 17) for the main pumps should be removed during the test of the pony motors, and during this time, the reactor-tank access cover may be removed (there is little mixing of reactor and pool water with flows of less than 3000 gpm).

___ 4. After the above test is completed, close the three motorized valves (the test blocks must be restored temporarily). Place all the battery-to-motor disconnects in the OFF mode. Return all three battery-to-charger disconnects to ON mode.

7.5.3. Gasoline-Operated Pump

The emergency gasoline-operated pump, located in the primary pumphouse is in the standby mode. The gasoline engine-driven pump is not required; therefore, the following conditions are in effect:

1. The gasoline storage tank and fuel transfer piping to the tank were removed to reduce potential risk of a gasoline explosion.
2. The inlet and exit valves are open and locked with a chain.
3. A 1/2-in.-diam hole was drilled through the discharge checkvalve disc to prevent stagnant water buildup.
4. Electrical connections to the control circuits have been disabled.

7.5.4. Shutdown Pump

References

Drawings: D-18774
D-44118

The purpose of the shutdown pump is to remove decay heat during normal shutdowns and to provide emergency cooling flow of approximately 1200 gpm in the event of an electrical power outage. The normal state of the shutdown pump is on standby with the following conditions:

1. The inlet and exit valves are open and locked with a chain.
2. The electrical block located in the control room on the main panel board is inserted in position.

In the event of an electrical power outage, the emergency diesel generator will furnish the necessary power for the shutdown pump to maintain a flow greater than 1000 gpm.

The operational dependability is tested during each quarterly shutdown and, as stated above, the pump is used during each normal shutdown.

7.5.5. Minimum Requirements for Reactor Operation

The following are the minimum emergency units necessary for operation of the ORR at power levels above the minimum accountable power level.

1. At 15 MW or below - none
2. At 15-20 MW - one dc unit dependable
3. Greater than 20 MW - two dc units dependable.

If the minimum requirements on the emergency units cannot be met, the reactor power should be reduced to the level where the requirements can be met.

7.5.6. Loss of Main Cooling Pumps

In the event that reactor water flow is lost due to a stoppage or breakdown of the main cooling pumps, the reactor will be scrammed. If it is not scrammed automatically, it should be shut down manually by using the console scram switch.

If the main cooling pumps have shut off due to a loss of electrical power in the area, the main cooling flow will coast down to approximately 3000 gpm and the three dc pony-motors will assume the load, maintaining this flow. If the dc pony-motors fail to maintain a flow of greater than approximately 1500 gpm, the shutdown pump should start and maintain this flow.

7.5.7. Loss of Water from the Reactor Pool and/or Primary System

If during an incident (earthquake, bombing, etc.), one of the main reactor cooling lines should rupture causing a rapid loss of water from the cooling system, the "process water" valves described below should be opened immediately and the emergency ventilation system put into operation. The emergency ventilation system operation would be necessary in the event the process water system was unable to prevent even a minor core meltdown. Naturally the reactor should be scrammed, if the automatic control has not already done so.

If water is being lost from the reactor pool for an unknown reason at a rapid rate (and it is isolated from the center and west pools), water can be added in one of the following ways:

1. sending water to the reactor pool from the center and west pools via the "fill and drain" pump;
2. sending water to the reactor pool from the storage tanks via the "fill and drain" pump; or
3. sending water from Building 3004 to any of the pools or the storage tanks by opening valves 409B, 411A, 410A, located near the top of the wall on the north side of the second level balcony.

If the three items above prove to be insufficient, then, as a last resort, but without hesitation, open the "process water" valves which will supply (1) a water flow via a 4-in. line to the reactor pool and (2) a water spray over the reactor core via a 2-in. line to a water manifold inside the vessel which will spray water over the core. The handwheel for the 4-in. water line valve to the reactor pool is located on the outside, second level west wall of the building west of the hot cell. The handle for the 2-in. water line to the spray nozzle manifold is located outside, north wall of the building immediately west of the north first level exit door.

7.5.8. Process Water as Reactor Pool Emergency Fill and as Core Emergency Coolant

References

Drawings: D-22320
D-30214
M-11492-OR-020E
Figure 7.8

1. Purpose

Process water has been provided for emergency use to the reactor pool and as an emergency coolant to be used as a water spray over the reactor core in the event of an incident causing the loss of all reactor cooling water. The systems could provide adequate cooling flow to prevent fuel from melting and are designed for use when all other established methods have been exhausted.

7.5.9. Summary

Reactor Operations Section personnel should familiarize themselves with the purpose, location, and operation of each of the components which provide emergency cooling for the reactor. Listed below are the items, again, in the order for which they would be expected to become operable.

1. dc pony motors
2. Shutdown pump
3. Center and west pool water
4. Storage tank water
5. Demineralized water from Building 3004
6. Process water valve to the 4-in. process water line to the reactor pool
7. Process water valve to spray nozzles

ORNL-DWG 84-9269

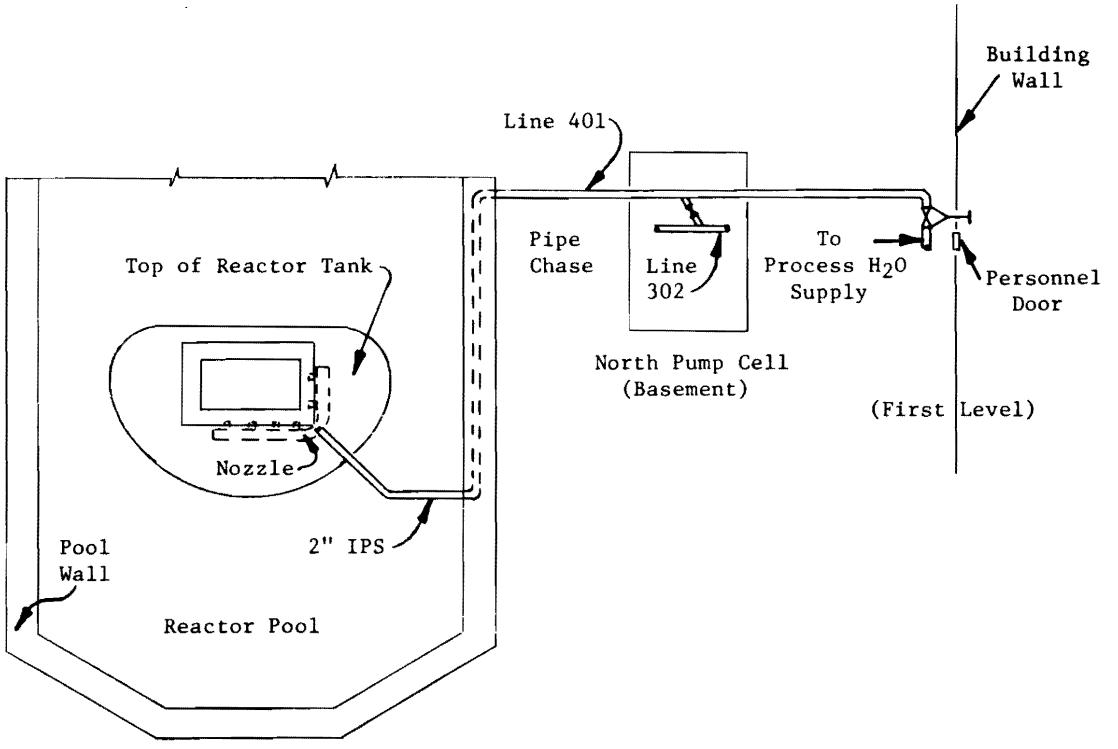

Fig. 7.8. Emergency cooling flow.

2. Description

The emergency 4-in. fill line for the reactor pool leaves the process water line header near the basement ceiling just north of the pool demineralizer reservoir tank and flows through a 4-in. line in the pipe tunnel to the pipe chase and up a 4-in. line inside the north pool wall into the reactor pool. A butterfly valve in the line is located in the basement also just north of the pool demineralizer reservoir tank. This valve has an extension handle which permits remote valve operation from outside the building at the second level west wall. The handle is identified as "emergency pool makeup plant process water." Opening this valve will supply plant process water to the reactor pool. The 4-in. line in the pool above the normal water level has a flange provided to allow the connection of an external hose for flushing and testing to the process drain.

The emergency cooling process water line (No. 401) for the core water spray leaves the process header at the basement ceiling near the north wall. The only valve in line No. 401 is also located near this point. This valve has an extension handle which permits remote valve operation outside the building. The valve handle is located just west of the first level (north) personnel door and is identified as "emergency reactor cooling plant process water." Opening this valve is the only action that is required to spray process water into the reactor tank. In the north facility pump cell, a 3/4-in. line is connected to the emergency cooling line from the exit side of the north facility pump (line No. 302). The valve on the small bypass line which is normally left open allows a small amount of reactor water to flow through the remaining portion of the emergency system. This circulation keeps that portion of the system clean and thereby increases its reliability.

From the north facility pump cell, the emergency line enters the pipe chase, proceeds to the reactor pool, and terminates on top of the reactor tank at the northeast corner. Inside the tank, two manifolds are connected to the line. One manifold is attached to the tank top on the north side and supplies two spray nozzles; the other manifold is attached to the tank top on the east side and supplies four nozzles.

3. Operation

Since this system is simple with a minimum of valves, few checks are necessary; but a complete operational test is conducted twice each year during a quarterly shutdown because the reactor must be shut down for the test. Use the following procedure.

a. Prepare the system as follows:

(1) Lower the reactor pool water to the grating level.

(2) Remove the reactor access cover.

(3) Lower the water in the reactor tank to a point just below the spray nozzles. CAUTION: Communication must be established between the personnel performing this operation because a high radiation field will be created if the water level inside the reactor tank is too low.

(4) Close the bypass valve in the north facility pump cell.

(5) A facility pump operating with at least one reactor demineralizer should be in service to provide a clean-up system for the process water added to the reactor system.

b. Procedure

(1) Station a man at the tank to observe the nozzles; open the emergency cooling water valve at the north personnel door.

(2) Watch the nozzles for water spray.

(3) Close the emergency cooling valve.

(4) Watch the nozzles to see if the water spray stops.

(5) Open the bypass valve in the north facility pump cell.

(6) Report the results of the test to the Reactor Supervisor.

7.6. Emergency Services

7.6.1. Introduction

When an emergency occurs, it is the responsibility of the person discovering the emergency to take immediate action to protect personnel and property and bring the emergency under control. This applies to fire, radiation, explosions, personnel injury, or any other emergency, and should be accomplished by one or more of the following methods.

1. Control the emergency single-handedly if possible.
2. Telephone 911 (Emergency Control Center) for help.
3. Pull the nearest fire alarm box.
4. Call the local emergency supervisor.
5. Call a local emergency squad member or anyone near.
6. Sound the building evacuation alarm if necessary.
7. Meet and orient the emergency service units.

When a call is received by the Emergency Control Center at 911, the dispatcher immediately notifies the Laboratory Shift Supervisor and dispatches the emergency service units needed (fire, guard, etc.).

Should an emergency occur at a time other than during regular duty hours, the shift supervisor should notify one on the "Divisional Emergency Call List"[1] and the Reactor Supervisor or his designated representative.

7.6.2. Fire Department

The Fire Department contains two sections, a fire-fighting section and a building-inspection section. The fire-fighting group is available at all times; the building-inspection group is available on the regular 8 to 4:30 shift.

---

[1]A copy of this is contained in the Operating Instruction Notebook located in the ORR control room.

The inspection group makes periodic inspections of Building 3042 and reports fire hazards to the building supervisor. Reactor Operations personnel can aid in fire prevention by reporting fire hazards to either the shift supervisor or to the Fire Department Inspection group.

A fire may be reported to the Fire Department by telephone (call 911) stating the location, name of the caller, badge number, and the type of fire, or by actuating the nearest fire alarm box. In either case, the person should remain in the area and direct Fire Department personnel to the fire.

Immediately after a fire extinguisher is used, a call should be made to the Fire Captain on duty, reporting the use of the fire extinquisher and the nature of the emergency. This will ensure that the fire extinguisher will be refilled and placed back in service for future emergencies.

1. Fire-fighting rules
   a. Put out a small fire if you are sure you can, then call the Fire Department by phone.
   b. Report all other fires to the Fire Department at once and sound the necessary alarms.
   c. Direct the Fire Department to the scene.

7.6.3. Guard Department

The Guard Department Headquarters is located in Building 2500. The main function is plant security; however, many other services are performed by the department personnel. Plant employees can aid the guards in the performance of their duties by properly wearing the picture film badge and observing plant rules. The badge should be worn on the left side, shirt pocket area.

The Guard Department works in conjunction with the Fire Department on fire alarms. Both departments have identical alarm code systems. Upon receiving a fire alarm by phone or fire alarm box, the Fire Department dispatcher will accompany the fire trucks to the emergency and the Guard Department dispatcher will operate the alarm code system until the fire dispatcher's return. Designated guards on all shifts are trained as auxiliary firemen. These men also have training in first aid.

Permits for the operation of plant vehicles are issued by the day shift Guard Captain. Permits for operating vehicles up to a 3/4-ton truck will be issued upon presentation of a State Permit. To operate vehicles larger than the 3/4-ton truck, the department will give a driver's test.

The plant ambulance is operated by guards. In an incident where ambulance service is needed, a phone call should be made to the Emergency Control Center, phone 911.

7.6.4. Dispensary

The Health Division's main dispensary is located in Building 4500, Wing 5. The Division is staffed with the full complement of doctors and nurses on the day shift, Monday through Friday. The main dispensary has a nurse on duty from 7:00 AM until 6:00 PM on Monday through Friday and services of the dispensary can be received at any time during these hours; however, an appointment must be made for a doctor's services, except in case of an emergency.

If services of the dispensary are needed on holidays and off-shifts, the Laboratory Shift Supervisor must be notified. A doctor is on "call" on all holidays and off-shifts. In special cases, the employee can be taken to a local hospital by the plant ambulance or other plant transportation. In case of an injury, regardless of how slight, the employee must report to medical for treatment.

7.6.5. Maintenance

The operation of the ORR and allied equipment requires considerable maintenance. To obtain the services of the Maintenance Section, a work order bearing the section number, the job order number, and a brief description of the repair work needed is sent to the Maintenance Engineer. If the job is an emergency, arrangements will be made for immediate repairs.

For emergency maintenance on evening shifts or weekends, the Laboratory Shift Supervisor will be notified of the situation and will make the necessary arrangements for the "call-in" of proper personnel.

7.6.6. Accidents

Any injured employee requiring assistance and dispatched to Medical in other than the ambulance is to be escorted. It is the reponsibility of the escort to see that the dispensary medical staff is immediately made aware of the injured employee's presence and to provide Medical with pertinent information about the accident, such as the involvement of chemicals, radiation, etc. It is the responsibility of building supervision to ensure that an individual is delegated the responsibility for meeting emergency assistance units responding to requests for assistance. The Laboratory Shift Supervisor acting as the Laboratory Emergency Director is in charge of all emergency efforts.

7.7. Evacuation Procedures

7.7.1. Emergency Personnel

1. Building 3001
   - a. Local emergency supervisor — ORR Supervisor
   - b. Warden — Operations Shift Supervisor
   - c. Searchers — Reactor Operators
2. Building 3004 and 3005
   - a. Local emergency supervisor — ORR Supervisor
   - b. Warden — Operations Shift Supervisor
   - c. Searchers — Reactor Operators
3. Building 3010
   - a. Local emergency supervisor — BSR Supervisor
   - b. Warden — Operations Shift Supervisor
   - c. Searchers — Reactor Operators
4. Building 3042
   - a. Local emergency supervisor — ORR Supervisor
   - b. Warden — Operations Shift Supervisor
   - c. Searchers — Reactor Operators

In the absence of the designated individual listed above, the duties described in this section will devolve to the next individual in the line organization. In the event this individual is the Operations shift supervisor, he will discharge the duties of this position (in addition to those of warden) until relieved by higher authority.

7.7.2. Responsibilities of Emergency Personnel[1]

An emergency squad consists of a local emergency supervisor, wardens, searchers, and other squad members. The responsibilities of each are outlined below:

1. The local emergency supervisor
   a. Organizes and trains the local emergency squad and plans for its use in handling the various types of anticipated emergencies always ensuring that the local plans are consistent with the overall Laboratory plans.
   b. In the event of a local emergency, directs his squad and ensures that:
      (1) Personnel have been evacuated from the affected area.
      (2) The Emergency Control Center has been notified.
      (3) Emergency service units are met, briefed on the situation, and directed to the scene.
      (4) Equipment and processes are shut down as necessary for safety.
      (5) The Laboratory emergency director is kept advised of the status of the emergency and of any needed assistance.
      (6) Additional manpower is secured if needed.
   c. In the event of a Laboratory-wide emergency, complies with the instructions of the Laboratory Director, which may include:
      (1) evacuation of personnel,
      (2) shutting down of process and building equipment, and
      (3) assembling his local emergency squad and dispatching it as directed.

---

[1] ORNL Emergency Manual, 1961.

2. The wardens
   a. Sound the local evacuation alarm.
   b. Direct employees from the emergency area to the local assembly point.
   c. Prevent re-entry.
   d. Check the safety of the assembly point and move it if necessary.
   e. Account for all employees in their areas after an evacuation.
   f. Have employees monitored for radioactivity, if the need is indicated, before dismissing them.
   g. Direct employees to other assembly points as instructed over the public-address system.
3. The searchers
   a. Search all areas of the building to make sure all employees have evacuated.
   b. Assist the wardens.
4. Other squad members
   a. Notify or summon assistance from the proper emergency service unit.
   b. Meet and orient the emergency service unit when it arrives.
   c. Make the necessary operational changes.
   d. Combat the emergency as required.

7.7.3. Laboratory Emergency Signals

1. General alert signal. On a general alert, the signal will come from the fire-alarm system. This will be in the form of Box 14 sounded four times followed by the fire-alarm box nearest the location affected. (This signal is sounded for second alarm fires as well as general alert conditions.)

2. Laboratory evacuation signal. On a Laboratory evacuation, the signal will be a 30-s warbling siren-like wail over the Laboratory-wide Bell Telephone public-address system, followed by verbal instructions.
3. Other signals. Other emergency signals are transmitted via the fire-alarm system; however, only two of these might involve Reactor Operations Section personnel. Box 11 sounded four times signifies an "all clear" condition. Box 12 sounded one time signifies that a "box test" is being conducted.

7.7.4. Laboratory Evacuation (Emergency Outside the Section Area)

If an emergency requiring a plant-wide evacuation occurs outside the Reactor Operations Section area, personnel will be notified as indicated in Section 7.7.3, above. The following action will be taken:

1. Operations personnel (either the warden or local emergency supervisor) will:
   a. scram the reactors (if they are operating);
   b. report the situation to all building occupants over the public-address system;
   c. initiate a building evacuation;
   d. select deputy searchers, if required, from the Reactor Operations Section personnel in the area assembly point (on Reactor Drive between Buildings 3001 and 3042);
   e. dismiss all other section personnel and direct them to evacuate the Laboratory; and
   f. after assessing the situation, may search the building for people who have not exited.

2. Operations personnel (general) will:
   a. leave the building via the most convenient exit (if a section member is in, or adjacent to, a reactor control room at the time the evacuation is initiated, he should take the emergency package with him when he leaves the building);
   b. assemble at the section area assembly point (on Reactor Drive between Buildings 3001 and 3042) for possible selection as a deputy searcher); and
   c. comply with instructions from local emergency personnel.
3. Other personnel in a Reactor Operations Section building will:
   a. leave the building immediately via the most convenient exit, and
   b. proceed to the nearest exit from the Laboratory unless otherwise directed via the Laboratory-wide public-address system.

7.7.5. Local Area Evacuation (Emergency Outside the Section Area)

If an emergency requiring a local area evacuation occurs outside the Reactor Operations Section, the local emergency supervisor (or warden) will be notified by the Laboratory emergency director or by other responsibile departments. (This notification may be received initially by the reactor control desk operator who will immediately contact the responsible local emergency supervisor or warden.)

1. Operations personnel (either the warden or local emergency supervisor, for each building) will:
   a. scram the reactors (if they are operating);
   b. report the situation to all building occupants over the public-address system;

c. initiate a building evacuation;

d. assemble his local emergency squad and all building occupants at the local assembly point; determine that the assembly point is in a safe area; move to a secondary assembly point, if necessary;

e. appoint a squad member as temporary warden; go to the section area assembly point (on Reactor Drive between Buildings 3001 and 3042) and select deputy searchers, if required, from the Reactor Operations Section personnel who have assembled there;

f. dismiss all section personnel not selected and direct them to evacuate the area and wait for further instructions via the Laboratory-wide public-address system;

g. after assessing the situation, may have the building searched for people who have not exited; and

h. wait for further instructions from the Laboratory emergency director via the Laboratory-wide public-address system.

2. Operations personnel (general) will:

a. leave the building via the most convenient exit (if a section member is in, or adjacent to, a reactor control room at the time the evacuation is initiated, he should take the emergency package with him when he leaves the building);

b. assemble at the local assembly point for possible selection as a deputy searcher (those individuals not selected should report to the section assembly point for possible service at the other reactors);

c. comply with instructions from local emergency personnel; and

d. wait for further instructions from the Laboratory emergency director via the Laboratory-wide public-address system.

3. Other personnel in a section buildings will:
   a. leave the building immediately via the most convenient exit;
   b. assemble at the local assembly point;
   c. comply with instructions from local emergency personnel; and
   d. wait for further instructions from the Laboratory emergency director via the Laboratory-wide public-address system.

7.7.6. Use of the Building for Shelter

Since conditions associated with an emergency outside the reactor buildings may vary considerably, the instructions one would be advised to follow may vary accordingly. It is conceivable that under certain circumstances the instructions in this section, pertaining to building evacuation, perhaps would not be the wisest to follow. An example of this would be an occurrence of an incident in another part of the Laboratory in which airborne activity released into the atmosphere would present a potential health hazard to personnel inside the reactor buildings (by virtue of the negative pressure inside of the buildings) but would present a greater hazard if the personnel were to leave the buildings.

In a case such as this, the local emergency supervisor (or warden) would have received information of the incident from the Laboratory emergency director. At this time, the local emergency supervisor (or warden) for each building should perform the following in the order listed.

1. Scram the reactor (if it is operating).
2. Announce over the building public-address system: "Attention! All personnel remain inside the building until further notice. Personnel in the immediate area who are outside the containment volume are advised to enter."
3. Monitor the building continuous air monitors frequently.

4. Close the inlet damper to the control room air-conditioning system by placing the "toggle" switch in the OFF condition.
5. Place the building in containment by depressing push button PB-12 in the control room.
6. Close the cell-ventilation dampers located over the B-9 cubicle.

In essence, this procedure is intended to decrease the building's negative pressure and subsequently minimize the contamination of personnel and materials that would result if there were the usual substantial flow of air into the building. During this period, the building continuous air monitors, the reactor-water activity recorder, the pool-water activity recorder, and the ^{16}N recorders should be monitored frequently.

When the condition of the outside air is no longer considered to represent a hazard (as determined by the Laboratory emergency director), the information should be announced over the building's public-address system and normal operations should be resumed as soon as possible.

7.7.7. Building Evacuation - Emergency in Building 3001

The ORNL Graphite Reactor (OGR) Building now has two distinct areas: (1) in-plant area - that portion of the building which is not accessible to the public and (2) visitors area - that portion which is allocated for public access during specified hours and is separated from the controlled plant area by a security fence, gates, and doors. The evacuation procedure for each area follows.

1. In-plant area. Contamination and radiation detection instruments are provided to monitor this area and their outputs are received by a central station located on the first level of this building. If the background increases above pre-selected setpoints, a local alarm will sound at the detecting instrument and a buzzer will sound at the central panel. Since the signal of this central panel is telemetered to the ORR control room,

the operator in the ORR control room is informed by an audible and visual signal. He will immediately notify his supervisor who will evaluate the conditions. The need for an evacuation could be the result of an emergency in Buildings 3005, 3010, 3042, or within 3001. The supervisor will make the evaluation and, if a building evacuation is necessary, he will inform the building occupants with an announcement on the ORR-BSR-complex public-address system.

The local emergency supervisor, or anyone directed by him, follows these general rules.

a. The situation or conditions will be announced over the public-address system. This announcement will help to make it possible for others to assist in combating the emergency.

b. The Emergency Control Center, phone 911, should be notified of the cause and magnitude of the emergency.

c. Re-entry of the building by searchers or other personnel (for radiation surveys, etc.) will be directed by the local emergency supervisor if safe and/or necessary; such re-entry will, whenever possible, follow the Health Physics procedures and recommendations.

The local emergency supervisor will combat the emergency until relieved by higher authority.

2. Visitor area. The same instrumentation as used in the "in-plant area" as described above for detecting abnormal conditions monitors this area also. The local emergency supervisor has the responsibility for this area and the special emergency procedure should be followed.

That portion of the ORNL Graphite Reactor (OGR), now a National Historic Landmark and opened to the public, is connected to a special visitors' parking lot on the north side of the Laboratory by a fenced walkway. This allows the general public to visit the OGR during certain hours without passes or advance notice. The OGR is near the ORR and the Pilot Plant as well as other process buildings of the Laboratory. The following procedure will be used for evacuating OGR visitors if any emergency elsewhere in the Laboratory should make this desirable.

a. Responsibility. The operating crew at the ORR will be responsible for evacuating the visitors from the area. The two general categories of occurrences that might require evacuation of the OGR are:

(1) a major incident at the ORR and

(2) a major incident elsewhere in the Laboratory which would require evacuation of the area including the Graphite Reactor.

In the first type of incident, the shift supervisor will make the decision to evacuate the OGR. If an evacuation is necessary due to an incident in another part of the Laboratory, the decision will be made at the Emergency Control Center and the shift supervisor will receive instructions accordingly. When the decision to evacuate the people from the visitors' access area is made, a decision must also be made as to which route to take - north via the pathway by which the visitors entered or south through the Laboratory.

b. Procedure. Since an evacuation could occur on a holiday or weekend, the crew on duty at the ORR area might consist of three people: the shift supervisor and two reactor operators.

(1) Evacuation southward. If it is necessary for the visitors to go south through the Laboratory, two men will enter Building 3001 through the east door and pass through the emergency door on the right into the public area. This door is equipped with a panic bar on the public-area side and with a switch to initiate an alarm at Guard Headquarters when the door is opened. Also, the Guard Department has placed an official seal on the door so that visual inspection will reveal whether it has been opened. One of the two men will go northward along the fenced walkway to the parking lot, directing any visitors along the pathway to return to the north parking lot. He will close the gate and do whatever is necessary for the safety of the group, including having checks made by an Industrial Safety and Applied Health Physics surveyor if this seems desirable. The other man will direct all visitors in the building through the emergency exit as rapidly as possible. He will accompany the group to one of the Laboratory gates where he will determine whether a Health Physics survey should be made. He will attempt to obtain transportation to the north parking lot where the visitors' cars will be parked and do whatever is possible for their safety and comfort. The Emergency Control Center should be notified of the completion of the evacuation and asked for further instructions. If any problem should arise requiring additional assistance, the Emergency Control Center should be called immediately.

(2) Evacuation northward. If the decision is to evacuate northward, one man (usually a reactor operator) will enter the visitor area by the route noted above and evacuate all visitors from the building as quickly as possible via the access pathway. As the visitors leave, the operator should follow them, giving any assistance that is needed. When this group leaves the north gate, the operator will close the gate and do whatever is necessary for the safety of the group. If radiation and contamination conditions are suspected, the visitors should be instructed to remain at the gate until a Health Physics surveyor can be called to check for possible contamination. The Emergency Control Center should be notified of the completion of the evacuation and asked for further instructions. If any problem should arise requiring additional assistance, the Emergency Control Center should be called immediately.

7.7.8. Building Evacuation - Emergency in Buildings 3004 and 3005

Emergency evacuations of Buildings 3004 and 3005 are initiated by personnel in the ORR (Building 3042) or BSR (Building 3010) by using the public-address system in the ORR and/or BSR.

Since the LITR has been decommissioned and the fuel and experiments have been removed, the possibility of a radioactive release has been eliminated. The general area is monitored by selectively placed radiation detecting instruments which are equipped with a local alarm only. Routine patrol checks through the area are made by each shift. An abnormal condition requiring an evacuation would be detected during these checks.

1. Upon receipt of information regarding an emergency condition which warrants an evacuation, the local emergency supervisor or his alternate will, if time permits, announce the condition over the public-address system.
2. The local emergency supervisor or his alternate will notify the Emergency Control Center (phone 911) of the emergency condition (if this has not been done previously). In case of fire, he will actuate the nearest fire-alarm box.
3. The local emergency supervisor or his alternate will continue to combat the emergency.
4. If the local emergency supervisor deems it necessary, he will initiate the evacuation plan for Buildings 3001, 3010, and 3042.
5. For a more serious emergency, the local emergency supervisor or his alternate will recommend to the Emergency Control Center that the entire Laboratory be evacuated. If such be the case, further instructions will be announced over the plant-wide public-address system.

Conditions in other buildings in the ORR-BSR complex could be a cause for emergency evacuation of these buildings. Applicable procedures for situations of this nature are provided elsewhere in this section.

7.7.9. Building Evacuation - Emergency in Building 3010

Emergency evacuations of Building 3010, for the purpose of this procedure, are divided into two classes. Class one evacuations are any evacuations automatically initiated by instrumentation. Class two evacuations are evacuations initiated manually.

The suggested course of action for the local emergency supervisor (or warden) is given below. It is not possible to provide a procedure that will apply in full for every condition which could arise; however, sound guidelines based on experience are provided. The proper execution of emergency procedures under actual conditions rests with well-trained and experienced personnel.

During any emergency in Building 3010, use should be made of the indications of radiation level displayed on the "high-bay log gamma monitor" meter and on the "high bay monitron" meter; both of these meters are located at the BSR remote console.

1. Class one evacuation, instrument initiated. An instrument-initiated (automatic) evacuation may be caused by high air-activity indications at two continuous air monitors in the air contamination coincidence circuit, or high radiation indications at two of the monitrons in the monitron coincidence circuit. Building containment is also automatically effected under these conditions.[1]

   If the evacuation signal is initiated automatically, a sudden increase in the air activity or radiation background within the building would be suspected since a gradual increase would usually have been detected by various low-level monitors and would have prompted a manually initiated evacuation. The following steps are suggested.

   (NOTE: It is assumed that all personnel will evacuate the Building 3010 containment shell upon actuation of the evacuation signal.)

---

[1]J. A. Russell, Jr. and D. J. Knowles, Description of Facility Radiation and Contamination Alarm Systems Installed in the Bulk Shielding Facility, Building 3010, ORNL-TM-1874 (August 22, 1967).

a. Shut down the BSR and PCA (if either is operating).

b. If time permits, the situation or conditions should be announced over the public-address system while depressing the silence button for the evacuation horn. This announcement will help to make it possible for others to assist in combating the emergency.

c. The Emergency Control Center, phone 911, should be notified of the magnitude and cause of the emergency.

d. Re-entry of the containment shell by searchers or other personnel (for radiation surveys, etc.) will be directed by the local emergency supervisor if safe and/or necessary; and such re-entry will, whenever possible, follow the Health Physics procedures and recommendations.

The local emergency supervisor will combat the emergency until relieved by higher authority.

2. Class two evacuations, manually initiated. An emergency condition, other than a suddenly occurring radiation or air-contamination incident, will usually develop at a rate which will permit some pre-evacuation planning, however limited. This type of emergency would include a pending or potential high-radiation or air-contamination level, a fire, or a release of undesirable gas into the building atmosphere.

The local emergency supervisor (or, in his absence, the control-room operator) will generally be forewarned of increasing radiation or air-contamination levels through the radiation and contamination alarm system. The control-room operator will notify the shift supervisor of radiation and/or contamination alarms as they occur.

Automatic early warning regarding fire, gas leaks, or other emergency conditions is not probable; however, such emergency conditions may not require the haste usually associated with an automatically announced radiation or air-contamination incident.

a. Upon receipt of information regarding an emergency condition which warrants an evacuation, the local emergency supervisor or his alternate will, if time permits, announce the condition over the public-address system.

b. The local emergency supervisor or his alternate will then actuate the evacuation horn, interrupting the signal after 10 s to announce the condition again and give pertinent directions to evacuating personnel. (Actuation of the evacuation signal places the building in containment.) (NOTE: Steps a and b can be accomplished from the ORR control room as well as from the BSR.)

c. The local emergency supervisor (or the warden) will initiate action to shut down the BSR should he deem such action necessary or helpful toward combating the emergency. (PCA shutdown will be required in any case.)

d. The local emergency supervisor or his alternate will notify the Emergency Control Center (phone 911) of the emergency condition (if this has not been done previously). In case of fire he will actuate the nearest fire-alarm box.

e. The local emergency supervisor or his alternate will continue to combat the emergency.

3. All-buildings evacuation, extended conditions

   a. If the local emergency supervisor deems it necessary, he will initiate the evacuation plan for Buildings 3001, 3004, 3005, and 3042.

   b. For a more serious emergency, the local emergency supervisor or his alternate will recommend to the Emergency Control Center that the entire Laboratory be evacuated. If such be the case, then further instructions will be announced over the plant-wide public-address system.

7.7.10. Building Evacuation - Emergency in Building 3042

Emergency evacuations of Building 3042, for the purpose of this procedure, are divided into two classes. Class one, instrument-initiated evacuation, includes any evacuation automatically started by instrumentation. Class two, manually initiated evacuation, includes evacuation initiated manually from the control room or from the emergency box outside the northwest personnel door.

The suggested course of action for the local emergency supervisor or, in his absence, the control desk operator is given below. It is not possible to provide a procedure which will apply in full for every condition which could arise, but sound guidelines based on past experience are provided. The proper execution of emergency procedures under actual conditions rests with well-trained and experienced personnel.

1. Class one evacuation, instrument initiated. An instrument-initiated (automatic) evacuation may be caused by high air-activity indications at two continuous air monitors in the air contamination coincidence circuit or high radiation indications at two of the monitrons in the monitron coincidence

circuit. Building containment is also automatically effected under these conditions (see Section 9.2, Facility Radiation and Contamination Alarm System, Building 3042). If the evacuation signal is initiated automatically, a sudden increase in the air activity or radiation background within the building would be suspected since a gradual increase would usually have been detected by various low-level monitors and would have prompted a manually initiated evacuation. The following steps are suggested.

(NOTE: It is assumed that all personnel will evacuate the Building 3042 containment shell upon actuation of the evacuation signal. The local emergency supervisor may elect to evacuate to the control room if his position within the high bay is favorable.)

a. If the evacuation signal is accompanied by an alarm from the control room high-level radiation monitor (>5 r/h), then the control room operator (warden) should scram the ORR (and any other reactor being operated from this control room) and evacuate the control room, taking the emergency equipment package with him if possible.

b. If the radiation level in the control room is less than 5 r/h, then the local emergency supervisor or, in his absence, the control room operator (warden) should survey the instrumentation to determine:

   (1) Radiation and air-contamination levels in the control room (from the control room radiation monitor and continuous air monitor).

(2) The cause of the evacuation signal, i.e., high-level signals from two monitrons or two continuous air monitors or both (from the radiation and contamination alarm system panel).

(3) The condition (radioactivity) of the reactor and pool systems as reflected by the reactor and pool water activity recorders and the ^{16}N recorders.

c. Emergency action to be taken after the above listed information is gathered must be decided upon by the local emergency supervisor or his alternate; however, decisions must be made quickly and, therefore, the following guidelines are offered.

(1) If it is suspected that the operating reactor is contributing to the condition, then the ORR should be shut down.

(2) If time permits, the situation or conditions should be announced over the public-address system while depressing the silence button for the evacuation horns. This announcement will help to make it possible for others to assist in combating the emergency.

(3) The Emergency Control Center, phone 911, should be notified of the magnitude and cause of the emergency.

(4) If radiation or air-contamination levels in the control room are sufficiently high, or are increasing rapidly, the ORR and any other reactor being operated from this control room should be scrammed and the control room evacuated.

(5) If, however, radiation and air-contamination levels in the control room are not excessively high, the local emergency supervisor can use the control room as a base from which to direct action toward correcting the emergency situation.

(6) Re-entry of the containment shell by searchers or other personnel (for radiation surveys, etc.) will be directed by the local emergency supervisor if safe and/or necessary; and such re-entry will, whenever possible, follow Health Physics procedures and recommendations.

d. The local emergency supervisor will combat the emergency until relieved by higher authority.

2. Class two evacuation, manually initiated. An emergency condition, other than a suddenly occurring radiation or air-contamination incident, will usually develop at a rate which will permit some pre-evacuation planning, however limited. This type of emergency would include a pending or potential high-radiation or air-contamination level, a fire, or a release of undesirable gas into the building atmosphere.

The local emergency supervisor (or, in his absence, the control-room operator) will generally be forewarned of increasing radiation or air-contamination levels through the radiation and contamination alarm system. The control-room operator will notify the shift supervisor of radiation and/or contamination alarms as they occur.

Automatic early warning regarding fire, gas leaks, or other emergency conditions is not probable; however, such emergency conditions may not require the haste usually associated with an automatically announced radiation or air-contamination incident.

a. Upon receipt of information regarding an emergency condition which warrants an evacuation, the local emergency supervisor or his alternate will, if time permits, announce the condition over the public-address system.

b. The local emergency supervisor or his alternate will then actuate the evacuation horn, interrupting the signal after 10 s to announce the condition again and giving pertinent directions to evacuating personnel. (Actuation of the evacuation signal places the building in containment.) (NOTE: Steps a and b can be accomplished from the emergency microphone box outside the northwest personnel door.)

c. The local emergency supervisor, or, in his absence, the control desk operator (warden) will shut down the ORR (and any other reactor being operated from this control room) should he deem such action necessary or helpful toward combating the emergency. However, if the situation permits, local operation at the other reactor should be initiated.

d. The local emergency supervisor or his alternate will notify the Emergency Control Center (phone 911) of the emergency condition (if this has not been done previously). In case of fire he will actuate the nearest fire-alarm box.

e. The local emergency supervisor or his alternate will continue to combat the emergency, operating from the control room as long as conditions permit.

3. All-buildings evacuation, extended conditions
   a. If the local emergency supervisor deems it necessary, he will initiate the evacuation plan for Buildings 3001, 3004, 3005, and 3042.
   b. For a more serious emergency, the local emergency supervisor or his alternate will recommend to the Emergency Control Center that the entire Laboratory be evacuated. If such be the case, then further instructions will be announced over the plant-wide public-address system.

7.7.11. Response to Air Attack Warnings

If the Laboratory receives information concerning an air attack of any type, a 30-s, continuous, siren-type sound will be broadcast from the plant-wide public-address system. The Laboratory emergency director will then broadcast on the public-address system any instructions that are necessary for the protection of Laboratory employees.

The directions given will depend upon the situation and will give the individual the option of evacuating the ORNL area or taking cover. In either event, operations at the reactors will cease. The following steps should be taken by each control-desk operator, assuming that each reactor is operating.

1. Scram the reactors.
2. Sound the evacuation horns. The buildings will automatically be placed in the containment mode.
3. Shut down all pumps of the following types:
   a. reactor secondary water pumps;
   b. reactor primary water pumps (do not shut off any battery-driven motors);
   c. pool secondary water pumps; and
   d. pool primary water pumps.

4. Shut off all cooling-tower fans.
5. Silence the evacuation horn and make an announcement on the building public-address system concerning the situation.
6. Leave the building or take cover, as is decided at the time.

If employees are instructed to leave the buildings, they should take with them portable, radiation-detection instruments for use in any emergency which may ensue. If the reactor is down at the time of the warning, the work should cease immediately; and the employees should take the indicated steps to preserve their safety.

7.7.12. Evacuation Procedure Drills

Each crew, during the quarterly safety meeting, will review one of the emergency procedures. The procedures will be chosen for review on a rotating basis so that all local emergency personnel remains well informed of their duties. Local area evacuations will be scheduled often enough to keep the remainder of the people acquainted with the procedures. Each shift supervisor will be responsible for conducting at least one emergency response exercise each year. Also, the ORR and BSR evacuation horn will be sounded each week as part of the weekly "FRCAS" checks (Example 8.3) on the 12-8 shift.

7.7.13. Maintenance Policy for Building Evacuation Equipment

Emergency building evacuation procedures are so important that they have been developed for practically every operating area at ORNL. It has been recognized by the Laboratory that there must always be available some method of quickly informing people in an operating area when a hazard exists so that they can leave.

In work around the reactors at ORNL, it has been found that the public-address system can be used just as effectively as the standard air horns to advise people to evacuate the building. For this reason, the public-address systems for the buildings in the ORR-BSR complex have

been connected to the emergency power system in each building. The ORR public-address system has been equipped with dual amplifiers, either of which can drive all of the speakers for the building complex.

Procedures have been set up to test the air-horn evacuation systems in each building; however, the public-address systems are used so frequently for paging that further testing is unnecessary. If either the air-horn or the public-address building-evacuation system fails, it must be repaired promptly; because, if the remaining system should fail before repairs are made, the building must be evacuated until repairs can be completed. This evacuation should be done by Operations personnel who would, by direct conversation, tell each person in the building that he must leave the area.

7.8. Emergency Actions

7.8.1. Introduction

Operations personnel are trained to cope with emergencies related to the areas where they perform their duties and responsibilities. While it is impossible to prepare procedures to cover all emergencies, a few specific cases are included; and, in other situations, personnel are expected to follow general rules and philosophy and exercise good judgment. When conditions of an emergency nature occur including, but not limited to a radiation and/or contamination incident, injury to personnel, or damage to equipment, the Reactor Supervisor of his designated representative should be notified. Also, a member on the "Reactor Operations Section Emergency Call List," a member on the "Divisional Emergency Call List," and the on-duty advisor for the "Emergency Shift Technical Support" may have to be notified.

1. "Reactor Operations Section Emergency Call List" -

   In the event of a serious emergency involving any operations or buildings for which the Reactor Operations Section is responsible, the people on the call list should be notified. The first person notified will be responsible for notifying the others. The call list is located in the "Special Instruction Notebook" in the ORR control room.

2. "Emergency Shift Technical Support" -

   A system has been established whereby specific individuals will be available around-the-clock to provide technical assistance as may be required.

   The system developed will work as follows. If a problem develops during the off-shifts or over a weekend or holiday, the

reactor shift supervisor should follow the current practice and notify his line supervision by telephone. It would be the judgment of each supervisor whether he should notify the next higher level of supervision.

If the shift supervisor is unable to contact his line supervision or if it is determined that technical assistance is necessary, the on-duty technical advisor (ODTA) should be contacted. A duty schedule is provided to each reactor supervisor and to the Laboratory Shift Supervisor (LSS) indicating who is on call during any specified time period.

Should it be necessary to call the ODTA, the reactor shift supervisor may call him at the specified telephone number or request the LSS to make the call for him. In any case, the LSS should be notified whenever the ODTA is called. In the event that the ODTA cannot be reached by telephone, it will be necessary for the LSS to contact him by Pageboy radio. The individual on duty will have a Pageboy radio receiver in his possession whenever he is out of contact by telephone. Upon receipt of a message by Pageboy, the ODTA will respond by calling the reactor shift supervisor, the LSS, or both.

The name and telephone number of the ODTA is posted in the reactor control room on the console and in the LSS office. A list of all of the technical advisors and telephone numbers are located in the special instruction notebook in the ORR control room.

7.8.2. Filling the Reactor Heat-Exchanger Pit

References: ORNL Dwg. D-37709-R2
D-37711-R1
D-37843-R1
D-37967-R1

In the event of high radiation in the reactor primary cooling system from fuel meltdown, etc., the reactor heat-exchanger pit must be filled with water to shield personnel from exposure. Special precautions should be exercised to avoid the high-radiation sources in areas where reactor water lines are unshielded. These include: (a) the pumphouse, (b) the "Y," "T," and expansion pits, (c) the decay tank access port, and (d) the bypass valve pit. A survey meter should be used to survey exposed piping in and around the heat-exchanger or pumphouse area.

After assuming that other preliminary actions have been taken (i.e., the reactor scrammed, emergency ventilation established, and emergency reactor cooling established), the supervisor should initiate the following steps.

1. Open the valve identified "emergency process water fill reactor heat-exchanger pit." This valve is located approximately 15 ft southwest of the "reactor primary bypass" valve (see Fig. 7.9).
2. Remove the handle from the fill valve, and use it to close the drain valve identified "drain from reactor heat-exchanger pit." This valve is located approximately 24 ft east southeast of the heat-exchanger pit outside the fence.
3. During the filling operation, which requires approximately 75 min, transfer the handle from the drain valve to the fill valve to permit quick closing after the pit is filled.

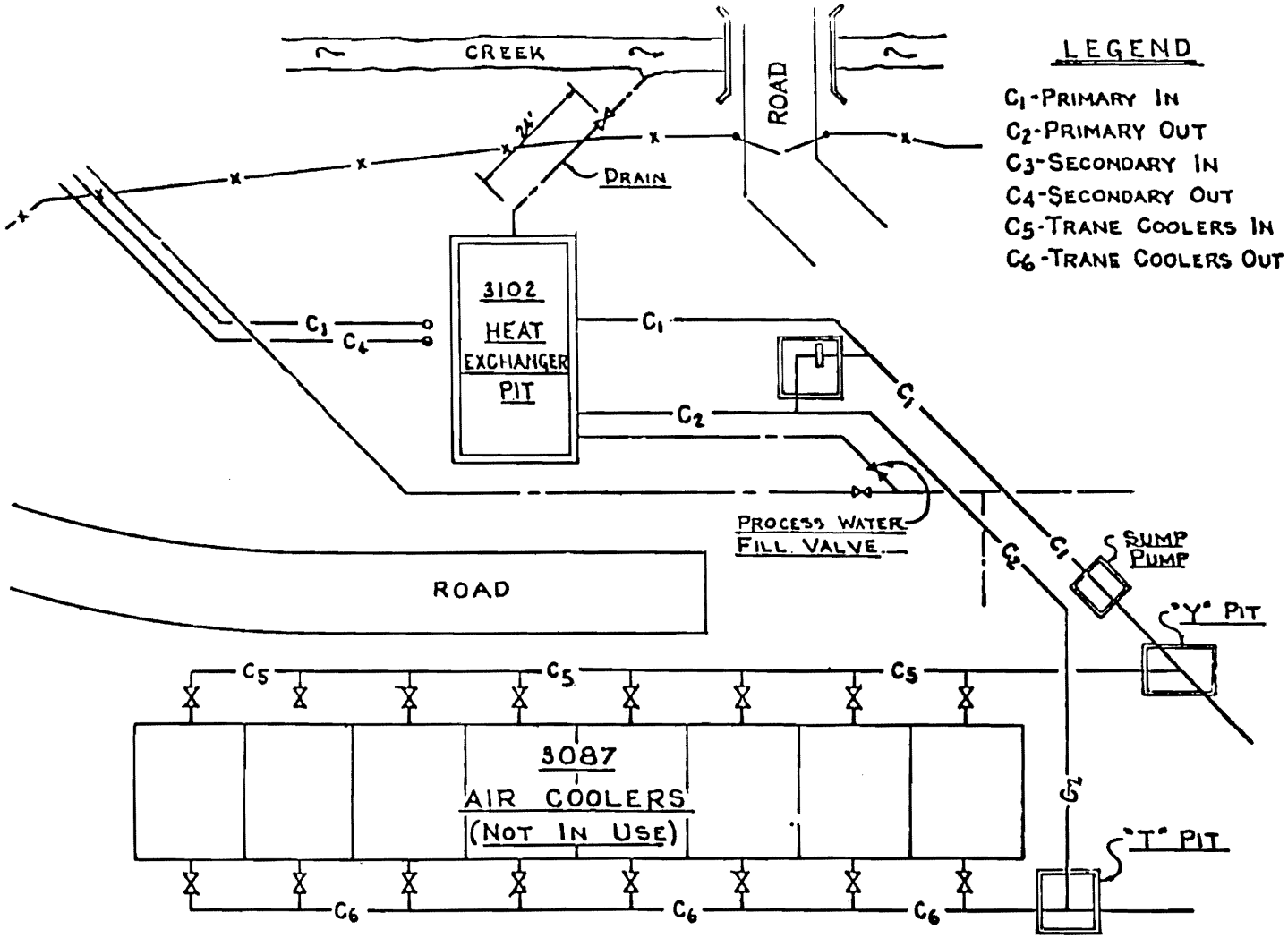

ORNL-DWG 84-9268

Fig. 7.9. Heat-exchanger pit area.

7.8.3. Remote Microphone for Building 3042 Public-Address System

A microphone which is part of the building public-address system is located in a weatherproof box mounted on the west, outside wall of Building 3042 near the northwest personnel door. The box for this unit is labeled "For Emergency Use Only." The instrument was installed to provide a one-way communication with building occupants from the building exterior. Use of this system should be limited to occasions when the building has been evacuated because of an incident; and it is, therefore, necessary to make announcements which can be heard inside the building. A test of the public-address system using this remote microphone is made each week (Example 8.3) to ensure proper operation.

7.8.4. Emergency Action for Gross Contamination in the ORR Primary Water System

Background information on the quantity of radionuclides in the ORR primary water system has been established for normal operating conditions. This information will be used as a reference point when it is suspected that additional radioactivity has been introduced into the water system and for following long-term trends in the water system. The background is maintained current by routine analyses of water samples during each operating cycle and is filed by the Reactor Supervisor.

In the event of a suspected fuel-element failure or the suspected introduction of fission products into the reactor system, the following action should be taken. Such an event would probably be indicated by the radiation-detection instruments.

1. A one-liter sample of primary coolant water should be taken as soon as possible. This sample will be delivered to the Analytical Chemistry Section (either the Radioisotopes-Radiochemistry Laboratory or the Nuclear and Radiochemical Analyses Group) for the following analyses:
   a. Radiochemical analyses on the listed nuclides:
      (1) $^{136-137}Cs$
      (2) ^{132}Te
      (3) $^{131-133}I$
      (4) $^{103-106}Ru$
      (5) ^{91}Sr
      (6) ^{239}Np
      (7) ^{24}Na
   b. Gross gamma count.
   c. Gross gamma count on a sample of degassed water.
   d. Gamma-ray spectrum.

   The one-liter sample should be kept to be compared with subsequent samples removed from the water system.
2. Successive sampling should be made at 3-h intervals for any or all of the analyses. This will be decided at the time, but usually a gross gamma on the sample and on a degassed sample will be sufficient.
3. Decay measurements should be made for samples taken in steps 1 and 2 above.
4. Nine (9) to twelve (12) h after the incident, samples may be taken at 9-h intervals.
5. Steps 2 through 4 above will be followed only if step 1 indicates radioactivity of sufficient magnitude to warrant the followup.

The introduction of radioactivities other than fission products into the water system is always a possibility. These activities, if a beta-gamma emitter, may also be indicated by the radiation-detecting instruments. Should such an event occur, step 1 above will be followed. This will establish identification of the activities and guide the course of action to be followed.

Alpha-emitting materials in approved containment may be irradiated in the ORR. When such materials are involved (e.g., plutonium fuel elements), water samples should be taken once per week for plutonium analysis. This routine sampling and analysis will provide a check on the containment; and, if ^{239}Pu is indicated, the reactor should be shut down and the source removed and contained to prevent the spread of contamination.

7.9. Abnormal-Operation Instructions

References: ORR Operating Instructions Notebook
ORR Experiment Notebook
Local Emergency Manual
ORNL Emergency Manual

7.9.1. Introduction

The purpose of this section of the manual is to provide instructions regarding the safe operation of the reactor during abnormal situations. Along with this manual, the listed references should also be consulted. The majority of material contained in this section is an expansion of the instructions provided elsewhere in this manual and in the above mentioned manuals. Additional instructions have been written to cover those abnormal situations not addressed by the other manuals. Naturally, it is impossible to provide instructions for all situations; operators are expected to use their training and experience to safely operate the reactor at all times.

The instructions in this section are organized into four (4) parts as follows

1. Symptoms
   a. Possible alarms
   b. Parameter changes
2. Possible causes
3. Automatic actions
4. Operator actions

These instructions should not be perceived as "hard-and-fast" rules; rather, they are provided as guidance to the operator. In some circumstances, it may be necessary to add to a given AOI, or to perform several AOIs concurrently. In general, an operator is expected to ensure that

the automatic actions of the various control systems have occurred, and to manually initiate them if not. This will ensure that the reactor is placed into a safe condition. It is understood that the operator will notify the shift supervisor and Reactor Supervisor of all abnormal situations in a timely manner.

The operator always has time to analyze his indications before he needs to take any corrective actions. Once again, the automatic control actions will guarantee reactor safety. "Tunnel vision," or concentrating solely on one indication to the exclusion of others, must be avoided. Furthermore, indications and alarms must be believed and acted upon until instrument malfunction has been positively identified.

7.9.2. AOI 1: Leaks in the Primary Cooling System

1. Small leaks

NOTE: If the leak rate does not exceed 30 gpm, the leak shall be considered categorically small. Leaks of this magnitude should present no immediate problem with the operation of the reactor. However, the reactor must be shut down when the leak rate reaches 30 gpm (administrative control).

a. Symptoms

(1) Possible alarms

(a) None

(2) Possible parameter changes

(a) Increase in frequency of water make-up as noted on the Reservoir Tank Level recorder.

(b) Increase in the make-up rate as calculated from the integrator readings.

(c) Increase in waste water counts as noted by the Tank Farm Instrumentation and routine sump counts.

(d) Increase in primary make-up flow rate.

(e) Decrease in U-bend standpipe levels.

b. Possible causes

(1) Improper valve lineup

(2) Leaking rod drive seals

(3) Ball float valve stuck open

(4) Failure of aluminum primary piping due to corrosion, fatigue, vibration, faulty weld, accident, etc.

(5) Pump leak

(6) Decay tank leak

(7) Demineralizer system leak

(8) Engineering test facilities leak

c. Automatic action

(1) Demineralized water is automatically made up to the reservoir tank as pool water is added to the primary system via the equilizer leg.

d. Operator actions

(1) Monitor the frequency of make-up to the reservoir tank and the rate of make-up from the integrator readings.

(2) If the leak rate is greater than or equal to 30 gpm, shut down the reactor and ensure after-heat removal.

(3) Locate and isolate the leak.

2. Large leaks

NOTE: Any leak from the reactor primary system that is greater than 30 gpm will be considered a large size leak.

a. Symptoms

(1) Possible alarms

(a) Main flow

(b) Low core ΔP

(c) Low reactor inlet pressure

(d) Make-up tank high/low level

(e) High ΔT

(f) High outlet temperature

(g) Facility cooling

(h) High reactor water activity

(i) High ^{16}N

(j) Low reactor water resistivity

(k) FRCAS

(l) Low pool level

(m) Primary make-up flow high

(2) Possible parameter changes

(a) Change in main flow rate from its normal operating value. If the leak is located between the venturi and the reactor tank inlet, the indicated flow would rise due to the reduced flow resistance caused by the leak. If the leak is located between the reactor tank outlet and the venturi, the indicated flow would drop.

(b) Dropping core ΔP.

(c) Oscillations in the indicated reactor power coupled with excessive servo motion caused by boiling in the core due to reduced pressure and reduced core flow rate.

(d) Rising core ΔT.

(e) Rising core outlet temperatures.

(f) Dropping reactor demineralizer flow rate.

(g) Dropping facility cooling flow rate.

(h) Rising reactor water activity.

(i) Rising ^{16}N levels.

(j) Dropping reactor water resistivity.

(k) Rising primary make-up flow.

(l) Dropped U-bend standpipe levels.

b. Possible causes

(1) Incorrect valving

(2) Ball float valve stuck open

(3) Failure of the aluminum primary piping

(4) Pump leak

(5) Decay tank leak

(6) Demineralizer system leak

(7) Engineering test facilities leaks

c. Automatic actions

(1) Possible setback, reverse, or scram.

(2) Pool water enters the reactor vessel via the equalizer leg and slant tube check valves.

(3) Possible transfer of the reactor primary pumps to the dc pony motors

d. Operator actions

(1) Manually scram the reactor if automatic action has not shut the reactor down.

(2) Immediately stop the main cooling pumps. (Do not wait to shut the discharge valves before de-energizing the pumps.)

(3) Locate and isolate the leak.

(4) Attempt to maintain reactor pool water level at least 4 in. above the grating. This will ensure that the slant tube check valves stay open, allowing pool water to flow through the core. For the worst case (a double-ended guillotine break on the pump discharge), the pool water level will drop to 4 in. above the grating about 55 min after the casualty. Pool make-up sources should be used in the following order:

(a) Send water to the reactor pool from the storage tanks via the "fill and drain" pump.

(b) Send demineralized water from Building 3004 to the pools or to the storage tanks.

(c) In the event that high radiation contamination levels or equipment damage precludes items (a) and (b) above, or if items (a) and (b) above do not keep the pool at least 4 in. above the grating, open the process water spray valve, entitled "emergency plant process water," located on the outside north wall of the building, immediately west of the north first level exit door and open the 4-in. emergency pool fill valve, entitled "emergency reactor cooling pool make-up plant process water," located on the outside, second level west wall, immediately west of the hot cell.

(d) As a last resort, rig fire hoses or hoses from the potable and/or process water systems.

NOTE: The core will be protected (that is, no cladding failures will occur) if it is covered with water.

(5) Notify the Emergency Control Center (911) if there is a need for assistance or the potential for a radiological problem exists.

7.9.3. AOI 2: Rapid Loss of Pool Water

1. Symptoms

a. Possible alarms

(1) Pool level (in control room and at poolside)

(2) FRCAS

(3) Make-up tank high/low level

(4) Annuli high pressure

(5) Containment electrometers

b. Possible parameter changes

(1) Drop in pool water level, as indicated on the pool water-level recorder and as visually noted.

(2) Rise in make-up water flow rate.

(3) Rise in radiation level around the pool.

(4) Reactor drops out of RUN on low primary flow rate, with resultant setback, reverse, and/or scram.

2. Possible causes

a. Improper valve lineup

b. Leak in an experiment facility (e.g., north or south engineering facilities, or beam holes).

c. Leak in the pool primary cooling system.

d. Leak in the reactor primary cooling system.

3. Automatic actions

a. Increased demineralized water make-up to the reservoir tank.

b. Possible reactor setback, reverse, and/or scram.

c. Possible initiation of building containment.

d. Possible building evacuation signal.

4. Operator actions

a. Manually scram the reactor.

b. Attempt to locate and isolate the leak.

c. Attempt to maintain the pool as full as possible to minimize radiation levels. The following sources of water are available.

(1) Building 3004 via valves 409B, 411A, and 410A located near the top of the wall on the north side of the second level balcony.

(2) Storage tanks via the fill and drain pump.

(3) Process water via the 4-in. emergency pool fill piping or fire hoses.

d. Initiate radiation and contamination surveys.

7.9.4. AOI 3: Loss of TVA Electrical Power

1. Symptoms

a. Possible alarms

(1) All modules in the FRCAS indicate inoperative (white lights brightly lit) and the buzzer sounds.

(2) Various alarms associated with the emergency diesel generator.

b. Possible parameter changes

(1) L-9 monitor goes dark.

(2) Most of the electrical equipment in the building is de-energized.

2. Possible causes

a. Troubles in the TVA power distribution system.

3. Automatic actions

a. The reactor scrams.

b. The ac motors on the reactor primary cooling pumps stop, and the battery-driven pony motors operate the pumps at about 3000 gpm flow.

c. The steam-driven blowers in the cell-ventilation and NOG systems start.

d. The emergency diesel generator starts and supplies electrical power to:

(1) FRCAS

(2) The fire alarm system

(3) The shutdown cooling pump

(4) The control-rod seat switch lights

(5) The facility cooling pumps

(6) Lights in Building 3042

(7) The public-address system

(8) No. 1 reactor outlet temperature recorder

(9) Various experiments

4. Operator actions

a. Ensure that the emergency loads listed in Section 3.d of this AOI have been energized from the emergency diesel generator. If they have not been energized, proceed as follows:

(1) Obtain the keys to the padlocked covers on the emergency diesel generator's controls and go to the diesel room.

(2) Check to see that the diesel controls are properly aligned as follows:

(a) The selector switch on the north wall is in AUTOMATIC.

(b) The over-crank switch on the north wall is in NORMAL.

(c) The starting motor battery circuit breaker on the south wall is shut.

(d) The reset level on the diesel engine is facing west.

(e) The bleed valve located on the east end of the north rocker arm cover is in RUN.

(f) The fuel inlet valves located on the floor along the north side of the diesel's base are open.

(g) The emergency diesel generator output breaker on the north wall is shut.

NOTE: If over-cranking has occurred, the selector switch must be momentarily turned to the RELAY RESET position before further attempts are made to start the diesel engine. Also, the emergency diesel generator output breaker must be reshut.

(3) Attempt to manually start the diesel by turning the selector switch to MANUAL.

b. Ensure that the cell-ventilation system is operating properly by checking the following:

(1) Flow and ΔP instrumentation at the filter pit indicate proper system operation.

(2) Building manometers indicate that the reactor building is being maintained at a lower pressure than the outside air pressure.

(3) If the steam turbine-driven blower fails to provide adequate cell-ventilation system flow, shut the inlet and exit valves on the filter pit to prevent backflow from the stack into the building.

c. Complete the "Power Outage Recovery Checklist for the ORR" and the "Checklist for ORR Restart Following an Unscheduled Shutdown."

7.9.5. <u>AOI 4: Response to Setbacks, Reverses, and Scrams</u>

1. <u>Setbacks</u>

a. Symptoms

(1) Possible alarms

(a) Main flow

(b) Reactor ΔP

(c) Experiment setback

(d) Normal off-gas pressure high

(e) Pressurizable off-gas pressure high

(f) Building ventilation low

(g) Safety level

(h) Reactor outlet temperature

(i) Reactor ΔT

(j) Facility cooling

(k) South facility 18-in. plug

(l) 1.8 N_L in start

(m) Primary make-up flow high

(2) Possible parameter changes

(a) Servo demand setpoint reduced, with a corresponding reduction in reactor power

(b) Decrease in reactor primary coolant flow rate

(c) Decrease in core differential pressure

(d) Increase in pressure, temperature, radiation level, etc. associated with an experiment as indicated in the experiment control room

(e) Decrease in NOG or POG vacuum

(f) Decrease in cell-ventilation flow rate

(g) Increase in any safety channel

(h) Increase in the core outlet temperature or core ΔT

(i) Decrease in the north or south facility cooling water flow rate

(j) Reactor dropping out of the RUN mode

(k) Increase in primary make-up flow

b. <u>Possible causes</u>

(1) A decrease in the reactor primary coolant flow rate ($\leq$17,000 gpm) or core differential pressure ($\leq$21.4 psi)

(2) An increase in the core outlet temperature ($\geq$135°F) or core ΔT ($\geq$13.5°F)

(3) An experiment exceeding set limits on temperature, pressure, radiation, etc.

(4) Insufficient NOG or POG vacuum ($\leq$-21-in. Hg)

(5) A decrease in the cell-ventilation flow ($\leq$5000 cfm)

(6) An increase in any safety channel ($\geq$110%)

(7) Insufficient cooling water flow to either the north ($\leq$71 gpm) or south ($\leq$61 gpm to the 5-ft plug and annulus or $\leq$51 gpm to the 24-in. annulus) engineering test facilities

(8) Reactor dropping out of the RUN mode

(9) Inadvertent operation of the servo demand setpoint switch

c. Automatic action

(1) Lowering of servo demand, with a corresponding reduction in reactor power

d. Operator actions

(1) Allow the setback to occur, i.e., do not attempt to counteract the setback action.

(2) Maintain reactor power at the setback level while investigating and correcting the cause of the setback; do not raise power until the cause has been corrected.

(3) Once the cause of the setback has been corrected and all necessary prerequisites for raising reactor power have been satisfied, raise reactor power to the desired level in accordance with current instructions.

(4) If the cause of the setback cannot be readily corrected, shut down the reactor.

2. Reverses

a. Symptoms

(1) Possible alarms

(a) Experiment reverse

(b) Normal off-gas pressure high

(c) Pressurizable off-gas pressure high

(d) Building ventilation low

(e) Safety level

(f) Reactor outlet temperature

(g) Reactor ΔT

(h) Facility cooling

(i) South facility 18-in. plug

(j) 1.8 N_L in start

(k) Safety trouble

(l) Two safety troubles

(m) 5-s period

(n) Water test

(o) Primary make-up flow high

(2) Possible parameter changes

(a) Insertion of all shim rods, with a corresponding reduction in reactor power

(b) Decrease in servo demand setpoint

(c) Increase in pressure, temperature, radiation level, etc., associated with an experiment as indicated in the experiment control room

(d) Decrease in NOG or POG vacuum

(e) Decrease in cell-ventilation flow rate

(f) Increase and/or erratic operation of any safety channel

(g) Increase in the core outlet temperature or core ΔT

(h) Decrease in the north or south facility cooling water flow rate

(i) Reactor dropping out of the RUN mode

(j) Period on the selected Log-N channel ≤ 5 s

(k) Period on the selected count-rate channel ≤ 5 s when reactor power is $\leq 1.8\ N_L$ on the selected Log-N channel

(l) Increase in primary make-up flow

b. Possible causes

(1) Reactor power is $\geq 1.8\ N_L$ on the selected Log-N channel and one of the four following events occurs:

(a) An experiment exceeds set limits on pressure, temperature, radiation level, etc.

(b) The reactor drops out of the RUN mode.

(c) The raise-test switch is placed in TEST.

(d) Reactor period as measured on the selected Log-N channel is ≥ -1000 s after a reactor setback has occurred due to one or more of the following:

(aa) an increase in core outlet temperature ($\geq 135°F$) or core ΔT ($\geq 13.5°F$),

(bb) insufficient cooling water flow to either the north (≤ 69 gpm) or south (≤ 59 gpm to the 5-ft plug and annulus or ≤ 49 gpm to the 24-in. annulus) engineering test facilities,

(cc) a decrease in cell-ventilation flow (≤ 2500 cfm), or

(dd) insufficient NOG or POG vacuum (≤ -19-in. Hg).

(2) An increase occurs in any safety channel ($\geq 110\%$).

(3) Failure/malfunction occurs in any two safety channels.

(4) Reactor period becomes ≤ 5 s on the selected Log-N channel.

(5) Reactor period becomes ≤ 5 s on the selected count-rate channel when reactor power is $\leq 1.8\ N_L$ on the selected Log-N channel.

(6) Inadvertent operation of the reverse switch occurs.

c. Automatic action

(1) Insertion of all shim rods, with a corresponding reduction in reactor power

d. Operator actions

(1) Allow the reverse to occur, i.e., do not attempt to counteract the reverse action.

(2) Evaluate the situation. If the cause of the reverse has been corrected and all necessary prerequisites for raising reactor power have been satisfied, raise reactor power to the desired level in accordance with current instructions.

(3) If the cause of the reverse cannot be readily corrected, shut down the reactor.

3. Scrams

a. Symptoms

(1) Possible alarms

(a) Main flow

(b) Reactor ΔP

(c) Reactor outlet temperature

(d) Reactor ΔT

(e) No. 1 gamma

(f) No. 2 gamma

(g) ^{16}N south

(h) ^{16}N north

(i) Fast scram

(j) Safety level

(k) 5-s period

(l) Primary make-up flow high

(2) Possible parameter changes

(a) Rod seat lights energized, with a corresponding reduction in reactor power

(b) Decrease in reactor primary flow rate

(c) Decrease in core differential pressure

(d) Increase in core outlet temperature or core ΔT

(e) Increase in any gamma channel

(f) Increase in any ^{16}N channel

(g) Increase in any safety channel

(h) Period on the selected Log-N channel ≤ 1 s

(i) Increase in primary make-up flow

b. Possible causes

(1) A decrease in the reactor primary coolant flow rate ($\leq$14,000 gpm) or a core differential pressure ($\leq$15.3 psi)

(2) An increase in the core outlet temperature ($\geq$140°F) or core ΔT ($\geq$15.5°F)

(3) An increase in any gamma channel ($\leq 1.45\ N_F$)

(4) An increase in any ^{16}N channel ($\geq 1.5\ N_F$)

(5) An increase in any safety channel ($>1.45\ N_F$)

(6) Reactor period ≤ 1 s on the selected Log-N channel

(7) Excessive primary make-up flow ($\geq$60 gpm)

(8) An experiment exceeding set limits on temperature, pressure, radiation level, etc.

(9) Inadvertent operation of the manual scram switch

(10) Inadvertent operation of the key switch or loss of power to circuit 31, resulting in a loss of power to the magnet amplifiers

c. Automatic action

(1) All scram magnets are de-energized, causing all shim rods to drop into the core.

d. Operator actions

(1) Verify successful completion of the scram action, i.e., all seat lights on, etc.

(2) Evaluate the situation. If the cause of the scram has been corrected and all necessary prerequisites for restarting the reactor are satisfied, restart the reactor.

(3) If any safety limit as given in the Technical Specifications has been exceeded or if the reactor shutdown system has experienced any degradation, do not restart the reactor without the express permission of the Reactor Supervisor.

7.9.6. AOI 5: Loss of Instrument Air

1. Symptoms

a. Possible alarms

(1) Low air pressure on cell-vent instrumentation (PS-111)

(2) Main flow

(3) Reactor inlet temperature (TT-11A)

(4) Reactor ΔP (PdT-55)

(5) Low building vent (FT65 and 66)

(6) No pool cooling pump (FT-3)

(7) Degasifier (LT-5)

(8) Facility flow (FT731, 751)

(9) Basin level

b. Possible parameter changes

(1) Reactor scrams

(2) See automatic actions

2. Possible causes
   a. Failure of plant air supply occurs.
   b. Air supply valve is inadvertently closed.
3. Automatic actions
   a. Main flow - alarm, setback, and/or scram occurs.
   b. Emergency shutdown pump starts.
   c. Primary temperature controller - zero output causes primary bypass valve to close and secondary bypass valve to close, providing maximum cooling.
   d. Pool temperature control system - secondary valve opens to provide maximum cooling.
   e. Cell ventilation system - steam blower will start.
   f. Degasifier - control valve will open and flood degasifier tanks.
4. Operator actions
   a. Shut down the reactor if it has not automatically scrammed.
   b. Take steps to prevent cooling the reactor too rapidly. This can be accomplished by reducing primary flow, by reducing tower fan speed, and/or by stopping one or both secondary pumps.
   c. Check the cooling tower area. In all probability a flooding of the basin will occur due to the opening of the make-up valve.
   d. Contact the Laboratory Shift Supervisor concerning the repairs to the plant air system if the occurrence is on an off shift.

7.9.7. AOI 6: Loss of Potable, Process, or Demineralized Water Systems

1. Potable or process water system

   a. Symptoms

      (1) Possible alarms

         (a) Fire alarm

         (b) Reactor tower basin level

         (c) Exchanger pump pressure

         (d) Reactor outlet temperature

         (e) Reactor inlet temperature

         (f) Filter seal low level

      (2) Possible parameter changes

         (a) Decrease in system water pressure

         (b) Increase in basin temperature

         (c) Decrease in basin level

         (d) Increase in inlet and outlet temperature

   b. Possible cause

      (1) Rupture in the water supply line or any of the system piping.

   c. Operator actions

      (1) Verify the loss of water as the cause of the problem.

      (2) Notify the Laboratory Shift Supervisor of the problem.

      (3) If water loss of water make-up to the cooling towers persists, it may be necessary to shut down the reactor. Water loss from the 30-MW tower is approximately 260 gal/min.

      (4) Attempt to locate the leak. If possible, isolate the faulty line or equipment.

      (5) If the sprinkler system is involved, the Fire Department should provide coverage of the area.

2. Demineralized water system

a. Symptoms

(1) Possible alarms

(a) Demineralizer resistivity low ($\leq$100,000)

(b) Storage tank level low ($\leq$6 ft)

(2) Possible parameter changes

(a) Demineralizer depleted

(b) Demineralized water level in storage tank below 6 ft.

b. Possible causes

(1) Routine demineralizer regeneration required

(2) Mis-valving or valve failure

(3) Rupture in storage tank and/or demineralized water piping

c. Automatic action

(1) Exit valve of demineralizer unit closes on low resistivity.

d. Operator actions

(1) Place spare demineralizer unit on-line and regenerate depleted unit.

(2) Check valving at demineralizer and major distribution points.

(3) Attempt to locate the leak. If possible, isolate the faulty line or equipment.

(4) If the loss of demineralized water persists, it may be necessary to shut down the reactor.

7.9.8. AOI 7: Loss of Steam

1. Symptoms

a. Possible alarms

(1) Turbine steam low pressure ($\leq$75 psi)

(2) Degasifier ($\geq$20 in. Hg)

b. Possible parameter changes

(1) Loss of vacuum at degasifier occurs.

(2) Steam tracing (in winter) becomes ineffective.

2. Possible causes

a. Loss of steam supply from ORNL steam plant

b. Improper valve lineup

3. Automatic action

a. If the degasifier level drops, the degasifier pump will de-energize.

4. Operator actions

a. Notify the steam plant personnel and obtain an estimate of the length of the outage.

b. Shut down the reactor if the outage is expected to last more than several minutes. The steam turbine-driven blower for the cell-ventilation system must be available in order to operate the reactor.

c. Note the outside air temperature and proceed according to the following:

(1) During freezing weather ($\leq$32°F), shut down the fresh air intake units, roof fans, and exhaust fans in the reactor building.

(2) If the outage is expected to last for greater than one hour and the outside air temperature is below 25°F:

(a) Remove the degasifier from service.

(b) Turn the main primary pumps off and open the battery-to-motor disconnects. Continue to circulate the reactor primary water via the shutdown pump; however, do not allow the reactor coolant

exit temperature to drop below 78°F. Turn the steam heater fans and exhaust fans off in each pump cell. Ensure that the doors to each pump cell are shut.

(c) Turn the reactor secondary cooling-tower fans off. Place their controllers in MANUAL. Open the tower riser bypass and secondary bypass. Run the reactor secondary pumps if necessary. Turn off the reactor tower building exhaust fans. Ensure that the door is shut and that the electrical heater is working.

(d) Place the pool cooling controller in MANUAL. Turn off the pool cooling-tower fan. Run the pool secondary pump as necessary.

(e) If possible, cover all sumps.

(f) Turn off the H&V units. Limit opening of outside doors. Close the damper on the control room ac unit and operate only as needed.

(g) Check outside piping often for signs of freezing.

(3) If the outside temperature is below 0°F:

(a) Close the main process water supply valves (using the T-handles) to the reactor and pool secondaries; then drain both secondaries.

(b) Install electric heaters in the pump cells and Building 3086 (pool tower).

(4) If the loss of steam occurs in addition to a loss of TVA power:

(a) Circulation of primary water with the shutdown pump (energized by the diesel generator) should still be possible. If not, it could become necessary to drain primary water lines in the pumphouse area depending on the temperature and expected length of outage.

(b) Close the inlet and exit butterfly valves to the cell-ventilation filter pit to prevent a backflow from the stack into the building.

7.9.9. AOI 8: Loss of One or More Reactor Primary Cooling Pumps

1. Symptoms

a. Possible alarms

(1) Main flow

(2) Reactor pressure

(3) Reactor outlet temperature

(4) dc 1 ac power

(5) dc 2 ac power

(6) dc 3 ac power

(7) High temperature of pump bearings

(8) Reactor ΔP

(9) Test blocks

b. Possible parameter changes

(1) Decrease in primary flow rate

(2) Scram

(3) Decrease in core ΔP

2. Possible causes

a. Electrical disturbance or loss of power to reactor primary cooling pumps

b. Inadvertently operating pump control switch

c. Failure of reactor primary cooling pump

d. Test blocks not in place

e. Failure of pump control system

3. Automatic actions

   a. Reactor scrams.

   b. The dc pony motors assume load.

   c. Diesel generator starts if TVA power has failed.

   d. Shutdown pump starts if flow decreases to 1200 gpm.

4. Operator actions

   a. Attempt to restart the pump(s) several times.

   b. Commence troubleshooting using the shift electrician and/or instrument technician.

7.9.10. AOI 9: Loss of Pool Cooling System

1. Symptoms

   a. Possible alarms

      (1) No pool cooling pump

      (2) Pool temperatures

      (3) Pool tower basin low level

   b. Possible parameter changes

      (1) Decrease in pool cooling flow rate

      (2) Increase in pool cooling system temperatures

      (3) Reduction in power level to $\leq 1.8\ N_L$ from reverse

2. Possible causes

   a. Failure of pool cooling pump

   b. Inadvertently operating pump control switch

   c. Loss of power to pool cooling system components

   d. Failure of pool secondary cooling pump

   e. Failure of pool cooling fans

   f. Failure of pool cooling control system

3. Automatic action

   a. Reverse to $\leq 1.8\ N_L$ if pool cooling flow decreases to 500 gpm

4. Operator actions

   a. If either the primary or secondary pool cooling pumps have stopped, attempt to restart them several times.

   b. Ensure that all controls in the system are in the correct position for system operation.

   c. Commence troubleshooting using the shift electrician and/or intrument technician.

   d. If the tower fans have failed, the basin temperature can be reduced by purging and adding water with a fire hose.

   e. Shut down the reactor if the pool temperature exceeds 105°F.

7.9.11. AOI 10: Loss of Secondary Cooling System

1. Symptoms

   a. Possible alarms

      (1) Reactor outlet temperature

      (2) Reactor inlet temperature

      (3) Heat exchanger pump pressure

      (4) Reactor cooling-tower fan

      (5) Reactor cooling-tower basin level

      (6) Tower basin temperature

   b. Possible parameter changes

      (1) Increase in inlet and exit temperature of reactor coolant

      (2) An outlet-temperature setback and/or scram

      (3) Primary bypass valves shut

2. Possible causes

   a. Loss of secondary pump

   b. Failure of cooling-tower fans or fan controls

   c. Major break in secondary piping

d. Fire at the cooling tower (Fire Box No. 216)

e. Mis-valving (e.g., after maintenance, drain valve left open, make-up valve not opened, etc.)

3. Automatic action

a. Outlet temperature setback and/or scram

4. Operator actions

a. If a failed secondary pump cannot be restarted, start the spare pump.

b. Observe the fan running lights for fan failure indication. Have shift electrician check fan breakers; reset vibration switches.

c. Check the basin level and valving to possibly correct low basin level and high basin temperature.

d. Add water to the basin via fire hose if necessary.

e. If a major break in the secondary piping has occurred, shut down the secondary system. If the reactor power has not automatically been setback (or scrammed), manually lower power or shut down until repairs can be made.

f. Notify Reactor Supervisor.

7.9.12. AOI 11: Loss of Shutdown Cooling Capability

1. Symptoms

a. Possible alarms

(1) High/low current, volts dc 1, 2, or 3

(2) dc 1, 2, or 3, ac power

(3) dc 1, 2, or 3, S-1

(4) dc 1, 2, or 3, S-2

b. Possible parameter changes

(1) Fluctuations in pony motor current

(2) Abnormal readings on the battery chargers

(3) Abnormal readings on the battery volts or motor amps

(4) Low specific gravity

2. Possible causes

a. Battery voltage or motor amps exceeding limits

b. Loss of battery chargers

c. Disconnect switches S-1 or S-2 opened or failed

d. Failure of pony motors

3. Automatic action

a. None

4. Operator actions

a. Push the pony motor test button to check the operation of the pony motors under load.

b. Check the disconnect switches for proper position.

c. Check the battery chargers for proper operation, if necessary place on equalize charge.

d. Ensure that the minimum requirements for reactor operation are met. The following are the minimum emergency units necessary for operation of the ORR at power levels above the minimum accountable power level:

(1) at 15 MW or below - none

(2) at 15-20 MW - one dc unit dependable and at

(3) greater than 20 MW - two dc units dependable.

e. If the minimum requirements on the emergency units cannot be met, the reactor power should be reduced to the level where the requirements can be met.

7.9.13. AOI 12: Uncontrolled or Unexpected Changes in Reactivity

1. Symptoms

   a. Possible alarms

      (1) Servo withdraw limit or insert 5 rods

      (2) Safety level

      (3) 5-s period

      (4) Nos. 1 and/or 2 gamma chambers

      (5) North and/or south ^{16}N detectors

   b. Possible parameter changes

      (1) Fluctuations in nuclear instruments

      (2) Wide variations in period readouts

      (3) Fluctuations in the position of the servo controlled rod

      (4) Fluctuations in temperature

2. Possible causes

   a. Servo failure

   b. Rod drive failure

   c. Unexpected or uncontrolled change in temperature

   d. Operator error in withdrawing or inserting rods

   e. Experiment failure

3. Automatic actions

   a. Setback

   b. Reverse

   c. Scram

4. Operator actions

   a. Ensure that the reactor is stable and is not on an unexplained positive period. If the unexplained condition is not corrected immediately and the power level is increasing, scram the reactor.

b. Observe the appropriate operational parameters to determine abnormal conditions.

c. Evaluate the ability of each experiment to insert reactivity.

7.9.14. AOI 13: Stuck Control Rod

1. Symptoms

a. Possible alarms

(1) None

b. Possible parameter changes

(1) Selsyn indicator does not show repositioning of control rod when the operator attempts to move the rod.

(2) No seat light is obtained after a scram.

(3) No change in nuclear instrumentation occurs during rod motion. (The reactor does not respond properly.)

2. Possible causes

a. Rod drive motor trouble

b. Debris in rod drive mechanism

c. Damage to control rod

3. Automatic action

a. None

4. Operator actions

a. Shut down the reactor with the operable control rods and verify shutdown status.

b. Have electrician check rod-drive motor.

c. Prepare for removal of control rod and drive mechanism.

7.9.15. AOI 14: Dropped Control Rod

1. Symptoms

a. Possible alarm

(1) If in instrument start, instrument start trip-out alarm will occur.

b. Possible parameter changes

(1) Reactor power drops.

(2) Core ΔT drops.

(3) Period meters show a negative period.

(4) Rod seat light comes on.

(5) Rod clutch light comes on.

(6) If the reactor is in RUN, it trips out of RUN.

(7) If the reactor is in INSTRUMENT START, it trips out of INSTRUMENT START.

(8) If the reactor is in SERVO, it shifts to MANUAL.

(9) If selected, FAST PERIOD PERMIT is cancelled.

2. Possible causes

a. Loss of power to the scram magnets caused by:

(1) Loss of continuity between the magnet amplifiers and the control rod drive mechanism

(2) Loss of power to the magnet amplifier

b. Mechanical shock to the control rod drive mechanism

c. Buildup of corrosion on magnet or armature

3. Automatic actions

a. Selected fission chamber inserts.

b. Associated rod drive mechanism runs down. When rod is made up, the clutch light goes out.

c. If the reactor is in RUN, it trips out of RUN.

d. If the reactor is in INSTRUMENT START, it trips out of INSTRUMENT START.

e. If the reactor is in SERVO, it trips out of SERVO.

f. If selected, FAST PERIOD PERMIT is cancelled.

g. The servo demand resets to N_L.

4. Operator actions

a. If more than one rod has dropped, immediately scram the reactor.

b. Announce the casualty. Recovery cannot commence until the shift supervisor is present in the control room.

c. Attempt to maintain power at or slightly below N_L by pulling the remaining rods.

d. Determine the cause of the dropped rod. If the problem cannot be resolved in a short time period, xenon production will probably cause an extended reactor shutdown.

e. Once the cause is known and corrected, pull the dropped rod. Power must remain at or below N_L until the dropped rod has been raised to 14.5 in.

f. Restore desired control-rod configuration and mode of reactor operation.

7.9.16. AOI 15: Loss of Control-Rod Position Indicator System

1. Symptoms

a. Possible alarms

(1) None

b. Possible parameter changes

(1) Selsyn indicator for individual control rods fails to show any change or indicates abnormal positioning of the rod as an operator attempts to reposition the control rods.

(2) Significant discrepancy between the selsyns and the meter stick indications in the subpile room.

2. Possible cause

a. Mechanical or electrical problems with the selsyn indicator.

3. Automatic action

   a. None

4. Operator actions

   a. Verify loss of control-rod position indication on the console selsyn by comparing with the meter stick readings in the subpile room.

   b. If the failure occurs during a start-up, terminate the start-up and have the faulty selsyn repaired.

   c. If failure occurs during operation, check the meter stick reading each time the rod is repositioned.

7.9.17. AOI 16: High Radiation Level in the Reactor Primary Cooling System

1. Symptoms

   a. Possible alarms

      (1) North and/or south ^{16}N detectors

      (2) Reactor water activity

      (3) Pool water activity

   b. Possible parameter changes

      (1) Possible oscillation in servo system

      (2) Increased radiation level in subpile room and near primary system piping

      (3) Increased radioactivity in routine water samples

2. Possible causes

   a. Failure of fuel element cladding

   b. Failure of an experiment

3. Automatic actions

   a. Possible ^{16}N channel scram (145%)

   b. Possible automatic evacuation signal

4. Operator actions

a. If the reactor has not scrammed and if a fission product release is suspected due to a relatively slow increase in the water activity, evaluate the radiation monitoring instruments and the nuclear channel instrumentation readouts; then, reduce the reactor power 50%. Re-evaluate the situation. If the trend indicates a loss of integrity of the fuel cladding or if there are any reasons to conclude that an unsafe condition exists, manually scram the reactor.

b. Investigate for high levels of radiation in the vicinity of the pipe corridor, subpile room, primary pump cells, and heat exchangers. Exercise caution to prevent overexposure of personnel to high radiation levels.

c. Record significant trends in radiation levels and instrument behavior. See Section 7.8.4 of ORR Operating Manual.

7.9.18. AOI 17: High Radiation Level in the Secondary Water Systems

1. Symptoms

a. Possible alarm

(1) Reactor secondary radiation

b. Possible parameter changes

(1) Increased water make-up rate to primary system

(2) Increased activity in secondary water

2. Possible causes

a. Ruptured tube in a primary coolant heat exchanger

b. Cross contamination from a drain or make-up system

3. Automatic action

a. None

4. Operator actions

   a. Observe the level and trend of contamination as indicated by readout of reactor secondary water activity recorder.

   b. Check the increase in the make-up rate to the water system to determine the primary system loss.

   c. Sample secondary water system to determine amount of radioactivity present.

   d. Attempt to locate the leaking heat exchanger by taking secondary water samples from each.

   e. If the radiation level or water loss is excessive, shut down the reactor.

7.9.19. AOI 18: Loss of Building Containment

1. Symptoms

   a. Possible alarms

      (1) Low building ventilation

      (2) Cell-vent main-duct high pressure

      (3) Low air pressure on cell vent

      (4) Turbine steam low pressure

      (5) Low air flow to stack

      (6) Filter seal high level

      (7) Filter seal low level

      (8) Cell vent filter pit high temperature

      (9) Building containment electrometers

      (10) Building containment

   b. Possible parameter changes

      (1) Low cell-ventilation system flow rates

      (2) High ΔP across the components of the cell-ventilation filter pits

      (3) No influx of air when an outside door is opened

2. Possible causes
   a. Loss of electrical power
   b. Loss of instrument air
   c. Loss of steam
   d. Failure of the cell ventilation system piping fan and/or filtering system
   e. A major breach in the containment building either accidental or intentional (e.g., resulting from terrorist activity, plane crash, etc.)
3. Automatic actions
   a. Reactor setback to N_L if flow decreases to 5000 cfm
   b. Start of steam-driven blower for the cell ventilation system
4. Operator actions
   a. The cell-ventilation system must be in operation whenever the reactor is critical or during fuel loading. In addition, the reactor cannot be operated at power levels above 300 kW unless the cell-ventilation system flow rate is above 4000 cfm. If the loss is sustained and cannot be immediately restored, reduce power, shut down, or stop refueling operation as applicable.
   b. Initiate action to correct the problem.

7.9.20. AOI 19: High Radiation Level in the Reactor Building or Off-Gas Systems

1. Symptoms
   a. Possible alarms
      (1) FRCAS
      (2) Building containment
      (3) Building containment electrometers
      (4) Degasifier activity high

(5) Reactor water activity high

(6) North and/or south ^{16}N detectors

(7) Pool water activity high

(8) NOG high radiation

(9) POG high radiation

b. Possible parameter changes

(1) Increase in the radiation levels measured during the weekly survey

(2) Increase in the radiation levels measured by the monitrons and/or CAMs

(3) Increase in the radiation levels of the NOG or POG systems

(4) Increase in the radiation levels of an experiment facility

(5) Increase in the routine water sample radioactivities

2. Possible causes

a. Fuel element cladding failure

b. Experiment failure

c. Failure of NOG, POG, or cell-ventilation systems

d. Loss of shielding around the reactor (e.g., low pool water level, removal of temporary shielding around experiment facilities, etc.)

3. Automatic actions

a. Reactor setback, reverse, or scram

b. Possible building containment

c. Possible building evacuation

4. Operator actions

a. Evaluate the rate of increase in radiation level.

b. Identify the cause of the high radiation level.

c. If an experiment is the cause, notify the experimenter.

d. If the filters in the off-gas or cell-ventilation systems are the cause (as indicated by low system flow rate and/or high filter P), switch filter banks.

e. If the reactor is the cause, consider shutting down the reactor. If the radiation level is slowly rising, but appears that it will eventually rise to a dangerously high level, reduce reactor power to see if the condition remains under control. If operation of the reactor at reduced power is not feasible or if personnel and/or equipment are in any jeopardy, immediately shut down the reactor.

f. Initiate building containment and/or building evacuation procedures as necessary to minimize personnel exposure and to prevent the spread of contamination. If the building is evacuated, the shift supervisor may elect to remain in the control room to monitor the reactor complex and to initiate corrective action. However, the reactor must be shut down and the control room evacuated if the control room radiation level reaches or exceeds 5 rem/h.

g. If the building was evacuated, notify the Emergency Control Center (dial 911) and assist emergency crews as required.

7.9.21. AOI 20: High Radiation Level in the Liquid Waste System

1. Symptoms

a. Possible alarms

(1) No annunciators in the control room will alarm.

(2) Tank Farm personnel notifies Reactor Operations of alarms received in their control room.

b. Possible parameter changes

(1) Increase in counts of samples taken from sumps and/or manholes

(2) Increase on radiation indicating instrumentation located at the Tank Farm

2. Possible causes

a. Mis-valving during demineralizer regenerations

b. Ball float trap failure

c. Primary coolant leakage

3. Automatic action

a. None

4. Operator actions

a. If demineralizer regenerations are in progress, recheck valving.

b. Check sight glasses for liquid flow through ball float traps.

c. Check for excess seal leakage on pumps.

d. Recheck samples from all sumps.

e. Recheck the radioactive level of waste water samples taken from manholes 1, 206, and 256.

f. After the source of the increase in liquid radioactivity level is located, make necessary valving change and/or repairs.

g. If the source is a primary coolant leak of $\geq$30 gpm, the reactor must be shut down until repairs are made.

8. RECORDS

8.1. Data Accumulation

8.1.1. Introduction

To facilitate the interpretation of accumulated operating data, uniformity in recording the data is of the utmost importance. The forms described in this section are used to record, collate, and aid in the interpretation of operating data. In general, the data will be recorded by operators. The shift supervisor is responsible for making sure that all pertinent data are recorded. It is also his responsibility to check any that may be questionable.

8.1.2. Routine Daily Report Forms

1. ORR hourly readings (Example 8.1)

   These data (as indicated by Example 8.1) are recorded each hour, on the half-hour, by the control desk operator. The data required on this report form are as follows:

   a. Gamma channels. These readings are taken from the gamma recorders.

   b. Temperature of reactor water in (T_1), °F. These readings are taken from the multi-temperature recorder.

   c. Temperature reactor water out, avg 1 + 2. These readings are taken from the exit-temperature recorder.

   d. Reactor water flow, gpm. This is the total cooling water flow minus the flow directed away for demineralization and facility cooling. The reading is taken directly from the flow indicators on the graphic panel.

ORR HOURLY READINGS

DATE	DAY NO.
SHIFT	SUPERVISOR

TIME									AVGS & SUMS
Gamma channel 1/2									
Temperature reactor water in (T_1), °F									
Temperature reactor water out, avg 1 + 2									
Reactor water flow, gpm									
ΔT, avg 1 + 2									
$\Delta T \times gpm \times 1.448 \times 10^{-4} = MW_1$									
Temperature reactor pool water in (T_3), °F									
Temperature reactor pool water out (T_4), °F									
Pool water flow, gpm									
$T_4 - T_3 = \Delta T'$									
$\Delta T' \times gpm \times 1.448 \times 10^{-4} = MW_2$									
$MW_1 + MW_2$ = total heat power, MW									
Heat energy, MW									
No. 1 safety									
No. 2 safety									
No. 3 safety									
Microammeter (Range _____)									
Log N (No. _____)									
Outside temperature, °F									

UCN-1706
(3 10-71)

PAGE 1

Example 8.1.

ORR HOURLY READINGS

TIME									AVGS & SUMS
Radioactivity reactor water, mr/hr									
Radioactivity pool water, mr/hr									
No. 1 shim rod, inches out									
No. 2 shim rod, inches out									
No. 3 shim rod, inches out									
No. 4 shim rod, inches out									
No. 5 shim rod, inches out									
No. 6 shim rod, inches out									
Test button – dc units Nos. 1, 2, and 3 (8–4 shift)									

Remarks:

REVIEWED AND APPROVED BY ENGINEER

Example 8.1. (Continued)

e. ΔT, avg 1 + 2. This is the temperature differential across the reactor and is the average of the Nos. 1 and 2 ΔT instrument readings.

f. $\Delta T \times gpm \times 1.448 \times 10^{-4} = MW_1$. This calculation is the heat removed from the reactor by the main flow of cooling water.

g. Temperature of reactor pool water in (T_3), °F. These readings are taken from the multi-point temperature recorder.

h. Temperature of reactor pool water out (T_4), °F. These readings are taken from the multi-point temperature recorder.

i. Pool water flow, gpm. This flow is taken from the pool water flow indicator on the graphic panel.

j. $T_4 - T_3 = \Delta T'$. This calculation is the temperature differential across the pool cooling water heat exchanger.

k. $\Delta T' \times gpm \times 1.448 \times 10^{-4} = MW_2$. This calculation is the heat removed from the reactor by the pool cooling system.

l. $MW_1 + MW_2$ = total heat power, MW. This calculation is the total heat power of the reactor in megawatts.

m. Heat energy, MW. This calculation is the total heat power of the reactor in MWh.

n. No. 1 safety

o. No. 2 safety

p. No. 3 safety. These are the safety level readings taken from the safety recorders.

q. Micromicroammeter. This is read directly from the micromicroammeter recorder.

r. Log-N. The log-N level is read directly from the log-N recorder being used.

s. Outside temperature, °F. This temperature reading is taken from the multi-point temperature recorder.

t. Radioactivity of reactor water, mr/h

u. Radioactivity of pool water, mr/h. These readings are taken directly from the respective recorders.

v. Shim rods, inches out. These readings are taken from the selsyn instruments on the control console.

w. Test button - dc units Nos. 1, 2, and 3 (8 to 4 shift). The test button on each dc unit will be depressed and held for approximately 2 min to observe a steady drop in voltage on the unit being tested.

2. ORR power changes and accumulated megawatt hours (Example 8.2)

This form is a record of the power level for a 24-h period. At constant power, the power level (as indicated by the No. 1 safety) is recorded on the half hour. The total power accumulated (hours of operation times the power level) is recorded on the hour. If there are changes in power level, they are recorded after each power change regardless of the time.

3. Shift check sheets

There are many instruments to be checked and duties to be performed, necessary to the operation of the reactor, that cannot be done by the operator at the control desk. To make sure that these important jobs are done, daily check sheets have been produced for each shift. When these duties are completed by the operators not on control desk duty, they are checked off on the check sheet.

These check sheets are interpreted as follows for the midnight shift (12 to 8 Shift Daily Check Sheet - ORR), day shift (8 to 4 Shift Daily Check Sheet - ORR), and evening shift (4 to 12 Shift Daily Check Sheet - ORR).

ORR POWER CHANGES AND ACCUMULATED MEGAWATT HOURS

DATE

DAY NO.

12-8 SHIFT	SUPERVISOR			8-4 SHIFT	SUPERVISOR			4-12 SHIFT	SUPERVISOR		
Time	Power Level	Incremental Mwh	Accumulated Mwh	Time	Power Level	Incremental Mwh	Accumulated Mwh	Time	Power Level	Incremental Mwh	Accumulated Mwh
Total Mwh for Shift				Total Mwh for Shift				Total Mwh for Shift			
SHIFT ENGINEER				SHIFT ENGINEER				SHIFT ENGINEER			

Power Level Units are Megawatts (Mw)

UCN-2302
(3 10-71)

Example 8.2.

4. 12 to 8 Shift Daily Check Sheet - ORR (inside checks), (Example 8.3)

   a. General and miscellaneous

      (1) Continuous air monitors and monitrons operating properly. Refer to Section 9.1.3 (Facility Radiation and Contamination Alarm System, Daily Checks) in the ORR Operating Manual.

      (2) Continuous air monitors and monitrons checked with source. Refer to Section 9.1.3 (Facility Radiation and Contamination Alarm System, Weekly Checks) in the ORR Operating Manual. The Facility Radiation and Contamination System Check Sheet (Weekly), Example 8.14, should be completed and attached to the ORR Daily Summary Sheet.

      (3) Evacuation horns tested. The evacuation horns should be tested using the following procedure.

         (a) Notify the Guard Department that the horns are to be sounded.

         (b) Valve out the nitrogen gas cylinder on horn No. 1 (3rd level) and horn No. 2 (basement).

         (c) Actuate the horns from the control desk, central panel, or the west personnel door manual evacuation button. The evacuation horn sound should be audible in all parts of the building and the warning lights on the outside corners of the building should be flashing.

         (d) On completion of the horn test, push the reset button on the "Manual Evacuate Module" unit located in the central panel, and reset the plunger on the solenoid valve for horns Nos. 1 and 2 and valve the nitrogen cylinders back into service.

12-8 SHIFT DAILY CHECKSHEET - ORR
(Inside Checks)

✓ *Acknowledged and/or Operating Properly*
X *Abnormal Condition Found*
NA *Not Applicable*
* *To be Performed During Shutdown*
M *Maintenance Item*

STARTING DATE

SHIFT

	OPERATOR'S INITIALS						
	GENERAL AND MISCELLANEOUS	**SAT.**	**SUN.**	**MON.**	**TUE.**	**WED.**	**THUR.**	**FRI.**
	1. Continuous air monitors and Monitrons operating properly							
	2. Continuous air monitors and Monitrons checked with source							
	3. Evacuation horns tested							
	4. Preparation for visitors (poolside area smeared)							
	5. Experiment panels checked and services completed							
*	6. All yellow cans emptied							
	7. PA system checks							
	THIRD LEVEL							
	1. Special assignments acknowledged							
*	2. Storage-tank level checked							
*	3. Core visually inspected							
	4. Instrument panel at hot cell checked							
	5. N_2 supply and pressure for evacuation horn checked							
*	6. Evacuation package checked							
	SECOND LEVEL							
	1. Dummy load on Sola transformer checked							

UCN-7494B
(3 3-82)

Example 8.3.

12-8 Shift Daily Checksheet - ORR
(Inside Checks)

Page 2

	FIRST LEVEL	SAT.	SUN.	MON.	TUE.	WED.	THUR.	FRI.
*	1. Diesel mode switch in "Auto"							
*	2. Diesel fuel valve pointed west							
*	3. Diesel oil heater operating							
*	4. Diesel radiator protection steam on for outside temp. $< 35^{\circ}$ F							
	BASEMENT							
*	1. Transfer mode switch in "normal"							
*	2. Cell-ventilation instrument panel "C" normal							
*	3. NOG catch tank purged							
*	4. NOG seal tank water level checked							
	5. Shim rod meter stick readings noted							
	6. Specified beam-hole liners pressurized							
	7. Specified beam-hole liners on constant air purge							
	8. N_2 supply and pressure for evacuation horn checked							
*	9. Degasifier: vacuum (inches H_2O)							
*	9. Degasifier: water flow							
*	9. Degasifier: water level (main tank)							
*M	9. Degasifier: pump, motor, and oil level							
M	10. Pumps and Motors Checked: pool demineralizer							
*M	10. Pumps and Motors Checked: facility							
M	10. Pumps and Motors Checked: pool cooling							
*M	10. Pumps and Motors Checked: process sump							
*M	10. Pumps and Motors Checked: Nash Hytor							
*M	10. Pumps and Motors Checked: fill and drain							

Example 8.3. (Continued)

(4) Preparation for visitors (poolside area smeared)

(a) Do necessary housekeeping to make the tour route presentable.

(b) Make a radiation survey of the tour route.

(c) Have the shift HP smear the poolside area and tour route.

(5) Experiment panels checked and services completed

(a) Make a check on each experiment panel as to normal condition on all instruments, recorders containing chart paper, and recorder pens inking.

(b) The research services completed as outlined in the Experiment Information Book and/or the Special Instructions Notebook.

(6) All yellow cans emptied. Dispose of the materials in these cans to the hot dumpster.

(7) PA system checks

(a) Call the Laboratory Shift Supervisor (4-6606) and request that music be put on the Reactor Operations area PA system. During the routine shift checks, the roving operator should be able to hear the PA clearly and distinctly in all the following locations.

(aa) Building 3042, inside. Third level, second level, toilets, first level, diesel room, and basement

(bb) Building 3042, outside. Area between 3042 and 3001, cell ventilation filter pit area, and area between BSR, ORR, and LITR

(cc) Pumphouses. ORR and BSR

(dd) Cooling towers. BSR and ORR pool

(ee) ORR heat-exchanger pit area

(ff) Reactor secondary tower

(gg) BSR control room, high bay area, Building 3080, and Building 3010 annex

(hh) Building 3004

(ii) LITR

(jj) Building 3001

Upon completion of the checks, call the Laboratory Shift Supervisor and request that the music be discontinued.

(b) PA microphones

Perform a test count on the following microphones:

(aa) Control room,

(bb) Poolside,

(cc) Room 202,

(dd) Room 206-B,

(ee) Room 208,

(ff) OGR, Room 202, and

(gg) Emergency microphone - west side of Building 3042.

(8) Third level

(a) Special assignments acknowledged. Check the Special Instructions Notebook at the beginning of each shift and complete the assignments accordingly.

(b) Storage-tank level checked. Note the levels of the storage tanks as indicated on the control room panel indicator.

(c) Core visually inspected. Visually inspect the inside of the reactor vessel via the Lucite windows in the access cover.

(d) Instrument panel at hot cell checked. Refer to Section 7.3 (Building 3042, Hot Cell Ventilation System) in the ORR Operating Manual.

(e) N_2 supply and pressure for evacuation horn checked. Refer to Section 9.1.2 (Facility Radiation and Contamination Alarm System, Air Horns) in the ORR Operating Manual.

(f) Evacuation package checked. Inventory the supplies as per the supply card inside the package and correct any deficient condition.

(9) Second level

(a) Dummy load on Sola transformer checked. Two light bulbs located in Room 211 at ceiling level should be burning.

(10) First level

(a) Diesel mode switch in "AUTO." The switch is located in the diesel room, north wall. Under normal conditions, the switch is in the AUTO position and the lucite access door to the switch is locked.

(b) Diesel fuel valve pointed west. The valve is located on top of the engine between the manifolds. If the valve is in any other position, the fuel supply is cut off.

(c) Diesel oil heater operating. The heater operation is checked by feeling of the rubber hose at the top of the heater; i.e., the hose should be hot to the touch. If the heater is not operating, the cold oil will delay the startup of the diesel. The breakers on the heater are located in panel 3E-P-310-L (Nos. 17 and 18), north wall of the diesel room.

(d) Diesel radiator protection steam on for outside temperatures <35°F. The valve for the steam heater is located at the heater. During below-freezing temperatures, the heater should be on for protection and to provide warm radiator conditions for proper startup of the diesel.

(11) Basement

(a) Transfer mode switch in "normal." The switch is located on the emergency electrical power transfer panel near the entrance to the vault.

(b) Cell-ventilation instrument panel "C" normal. Refer to Section 7.2.4 (Building Cell-Ventilation System, Routine Checks) in the ORR Operating Manual.

(c) NOG catch tank purged. Refer to Section 6.2.3 (Normal Off-Gas System, Catch Tank) in the ORR Operating Manual.

(d) NOG seal tank water level checked. Refer to Section 6.2.3 Off-Gas System, Water Trap and Seal Tank) in the ORR Operating Manual.

(e) Shim rod meter stick readings noted. The readings are taken at the subpile room and placed on the ORR Hourly Readings Sheet as a check on the proper operation of the console selsyns.

(f) N_2 supply and pressure for evacuation horn checked. Refer to Section 9.1.2 (Facility Radiation and Contamination Alarm System, Air Horns) in the ORR Operating Manual.

(g) Degasifier

(aa) Vacuum (in. H_2O). The normal reading is approximately 22 in.

(bb) Water flow. The normal water flow is 50 gpm (50% of the scale reading).

(cc) Water level (main tank). The sight glass should be approximately 3/4 full.

(dd) Pump, motor, and oil level. The pump operation should be noted as to sound level, temperature (by touch), packing leak, and oil level should be visible in the sight glass. The motor operation is normally somewhat noisy; however, any change in noise level or vibration should be noted. The temperature of the pump should be near that of the reactor water (approximately 120°F). There should be a slight leak from the packing (slow drip). Oil should be visible in the sight glass.

(h) Pumps and motors checked

(aa) Pumps. Check for water leaks at the seals, abnormal temperature of the seal and bearing housings (normally no discomfort to the hand by feeling), and abnormal noise level or vibration.

(bb) Motors. Check for abnormal noise and vibration. The sump pump and motor are located in the process sump; therefore note any abnormal sound on the unit. The sump low-level pump will be operating intermittently under normal conditions; however, when excessive water is being run into the sump, the high-level pump will be operating in addition to the low-level pump. On return to normal condition, the high-level pump should stop. Since the high-level pump doesn't run too often, the float may stick in the upper portion, thereby not stopping the pump. If the high-level sump pump is operating, check for the reason.

5. <u>12 to 8 Shift Daily Check Sheet - ORR (Outside Checks)</u> (Example 8.4)

   a. Pool secondary cooling tower

      (1) Basin level checked. The normal water level in the basin is approximately 12 in.

      (2) pH, phosphate, and total solids logged. Refer to Section 5.6.5 (The Secondary Cooling System) in the ORR Operating Manual. Note in the ORR logbook under pool secondary remarks any change made on phosphate addition or blowdown rate.

      (3) Secondary cooling pump and motor checked. Note any abnormal noise or vibration. The pump seals normally have a slight water leak.

      (4) Tower fan, motor, and oil level checked. Note any noise and/or vibration level change in the fan and motor operation. Observe any excess vibration of the tower structure which could be a good indication of improper operation of the tower fan and/or motor. The oil level is observed in the sight glass on the side of the fan wall and should be above the low-level mark.

      (5) Steam on for outside temperature <35°F. Refer to Section 5.9.2 (Freezing Precautions) in the ORR Operating Manual.

      (6) Tower deiced. Refer to Section 5.6.6 (ORR Pool Cooling Control System) in the ORR Operating Manual.

      (7) Acid pump and motor checked. Note any abnormal noise and vibration. Check the system for acid leaks.

      (8) Phosphate pump and motor checked. Note any abnormal noise and vibration. Check the system for phosphate leaks.

12-8 SHIFT DAILY CHECKSHEET - ORR
(Outside Checks)

✓ *Acknowledged and/or Operating Properly*
X *Abnormal Condition Found*
NA *Not Applicable*
* *To be performed during shutdown*
M *Maintenance Item*

STARTING DATE

SHIFT

	OPERATOR'S INITIALS							
	POOL SECONDARY COOLING TOWER	**SAT.**	**SUN.**	**MON.**	**TUE.**	**WED.**	**THUR.**	**FRI.**
	1. Basin level checked							
	2. pH, Phosphate and total solids logged							
M	3. Secondary cooling pump and motor checked							
M	4. Tower fan, motor, and oil level checked							
	5. Steam on for outside temperature < 35° F							
	6. Tower de-iced							
M	7. Acid pump and motor checked							
	8. Phosphate pump and motor checked							
	AIR-CONDITIONER TOWER							
M *	1. Pump and fan checked							
*	2. Basin level checked							
*	3. Steam on for outside temperature < 35° F							
*	4. Tower de-iced							
	5. pH, Phosphate, and total solids logged							
	6. Phosphate pump and motor checked							
	REACTOR PRIMARY PUMP HOUSE AND AREA							
M	1. Primary cooling pumps and motors checked							
M	2. Check-valves checked							
*	3. Batteries on dc Nos. 1, 2, and 3 (log specific gravity)							
*	4. Steam and heaters on for outside temperature < 35° F							

UCN-7493B
(3 2-82)

Example 8.4.

4 - 12 SHIFT DAILY CHECKSHEET-ORR

(Outside Checks)

Page 2

	STORAGE - TANK AREA	WED.	THUR.	FRI.	SAT.	SUN.	MON.	TUE.
*	1. Steam and heaters on for outside temperature < 35° F							
	HEAT - EXCHANGER PIT AND AREA							
M	1. Heat - exchanger vibration normal							
*	2. Steam on for outside temperature < 35° F							
M	3. Reactor primary bypass valves checked (sump No. 7)							
	REACTOR SECONDARY COOLING TOWER							
	1. pH, Phosphate, and total solids logged							
M	2. Basin level and bypass valve checked							
M	3. Secondary cooling pumps and motors checked							
	4. Instrument panel checked							
	5. Acid pump and motor checked							
M	6. Steam on for outside temperature < 35° F							
	7. Tower de-iced							
	8. Phosphate pump and motor checked							
*	Sumps and pumps (Nos. 1, 2, 3, 4, 5, and 6) checked							
	CELL VENTILATION FILTER PIT AND BLOWER AREA							
*	1. Air flow through radiation detector							
*	2. Radiation detector housing heater on for outside temperature < 35° F							
*	3. Δp across filters normal							
	4. Δp across filters recorded (logged)							
*	5. Cell ventilation and POG blowers normal							
*	6. Steam blower slight rotation of shaft for outside temperature < 35° F							
*	7. Backflow preventer checked							
	NORMAL OFF-GAS FILTER PIT AREA							
*	ΔP across filters normal							
*	ΔP across filters recorded (logged)							
	Shift Engineer's verification that the checks (inside and outside) have been completed and that appropriate action has been taken to alleviate any abnormal condition found.							

Example 8.4. (Continued)

b. Air-conditioner tower

(1) Pump and fan checked. Note any abnormal noise or vibration. A visual check of the fan belts may be made from the pool tower steps.

(2) Basin level checked. The normal water level in the basin is approximately 6 in. (with no blowdown from the pool secondary basin into the A/C basin).

(3) Steam on for outside temperature <35°F. Refer to Section 5.9.2 (Freezing Precautions) in the ORR Operating Manual.

c. Reactor primary pumphouse and area

(1) Primary cooling pumps and motors checked. Note any abnormal noise or vibration. The pump seals normally have a slight water leak. The bearing temperatures as indicated on the bearing temperature recorder at the pumphouse should be normal.

(2) Check-valves checked. Note any abnormal noise.

(3) Batteries on dc Nos. 1, 2, and 3 (log specific gravity). Check the specific gravity of one battery in each bank. The battery to be checked is determined from the ORR logbook, i.e., the next number in line from the previous check. The battery voltage and amperage of the three banks are also logged. Refer to Section 7.3.3 (Emergency Cooling for the ORR, dc Pony Motors) in the ORR Operating Manual.

(4) Steam and heaters on for outside temperature <35°F. Refer to 5.9.2 (Freezing Precautions) in the ORR Operating Manual.

d. Storage-tank area

(1) Steam on for outside temperature <35°F. Refer to Section 5.9.2 (Freezing Precautions) in the ORR Operating Manual.

e. Heat-exchanger pit

(1) Heat-exchanger vibration normal. Self-explanatory.

(2) Steam on for outside temperature <35°F. Refer to Section 5.9.2 (Freezing Precautions) in the ORR Operating Manual.

(3) Reactor primary bypass valves checked (sump No. 7). Note any noise and water leak from the valve.

f. Reactor secondary cooling tower

(1) pH, phosphate, and total solids logged. Refer to Section 5.3.6 (Chemical Conditioning of Tower Water) in the ORR Operating Manual. Note in the ORR logbook under reactor secondary remarks, any change made on phosphate addition or blowdown rate.

(2) Secondary cooling pumps and motors checked. Note any abnormal noise or vibration. The pump seals should have a slight water leak.

(3) Basin level checked. The normal basin level is approximately 48 in.

(4) Instrument panel checked. Instrumentation on the local panel includes readout for the following parameters; the respective, normal steady-state values, if known, are given.

(a) Reactor inlet temperature. Approximately 117°F.

(b) Tower flow north. To 6000 gpm (variable).
Tower flow south. To 6000 gpm (variable).

(c) Reactor outlet temperature. Approximately 128°F.

(d) Reactor primary bypass valve. Approximately 40% open.

(e) Reactor secondary heat exchanger inlet temperature. Variable.

(f) Reactor secondary heat exchanger outlet temperature. Variable.

(g) Reactor secondary mean temperature. Variable.

(h) Reactor secondary valve position. Variable.

(i) Basin temperature. Variable.

(j) Foxboro instrument

(aa) Secondary setpoint. Variable.

(bb) Secondary mean temperature. Variable.

(k) Foxboro instrument

(aa) Basin temperature. Variable.

(bb) Secondary valve position. Variable.

The instruments should be checked to determine that all readings are normal and the instruments contain chart paper and that chart drives are operating and pens inking.

(5) Acid pump and motor checked. Note any abnormal noise and vibration. Check the system for acid leaks.

(6) Bypass valve checked. Note any abnormal noise, air leak on the positioner, or water leak at the shaft.

(7) Steam on for outside temperature <35°F. Refer to Section 5.9.2 (Freezing Precautions) in the ORR Operating Manual.

(8) Tower deiced. Refer to Section 5.3.5 (Operating the Fans in the "Reverse" Direction) in the ORR Operating Manual.

(9) Phosphate pump and motor checked. Note any abnormal noise and vibration. Check the system for phosphate leaks.

g. Sumps and pumps

Sumps and pumps (Nos. 1, 2, 3, 4, 5, 6, and 6) checked. The water level in the sumps should be near the bottom of the sumps. High water level indicates improper operation of the respective pump. Note any noise and vibration of the pump during operation.

h. Cell-ventilation filter pit and blower area

(1) Air flow through radiation detector. The normal flow is approximately 10% of the full scale reading on the flow indicator.

(2) Radiation detector housing heater on for outside temperature <35°F. Self-explanatory.

(3) P across filters normal. Self-explanatory.

(4) Cell-ventilation and POG blowers normal. Note any abnormal noise and vibration.

(5) Steam blower slight rotation of shaft for outside temperature <35°F. The manual bypass valve should be opened to supply just enough steam for a slight rotation, i.e., to keep condensate in the housing from freezing.

(6) Normal off-gas filter pit area P across filters normal. Self-explanatory.

i. The shift supervisor signs the check sheets to verify that the checks (inside and outside) have been completed and that appropriate action has been taken to alleviate any abnormal condition found.

6. 8 to 4 Shift Daily Check Sheet - ORR (Inside Checks, Example 8.5)

NOTE: Many of the 8 to 4 shift daily checks (inside and outside) are identical to the ones on the previously listed 12 to 8 Shift Daily Check Sheets (Examples 8.3 and 8.4). On the checks that are identical, a reference will be made ("Refer to the 12 to 8 Shift Daily Check Sheet explanation"), with reference to the ORR Operating Manual for the respective information.

a. General and miscellaneous

(1) Continuous air monitors and monitrons operating properly. Refer to the 12 to 8 Shift Daily Check Sheet explanation.

8-4 SHIFT DAILY CHECKSHEET -ORR
(Inside Checks)

√ *Acknowledged and/or Operating Properly*
X *Abnormal Condition Found*
NA *Not Applicable*
* *To be Performed During Shutdown*
M *Maintenance Item*

STARTING DATE

SHIFT

	OPERATOR'S INITIALS							
	GENERAL AND MISCELLANEOUS	**FRI.**	**SAT.**	**SUN.**	**MON.**	**TUE.**	**WED.**	**THUR.**
*	1. Continuous air monitors and Monitrons operating properly							
*	2. Cutie pies and survey meters, location and operation checked							
	3. Experiment panels checked and services completed							
	4. Gas mask supply checked							
	5. Background survey completed							
	6. "Reactor on" lights checked							
	7. Record data required by "water system checks"							
	8. Supply inventory check							
*	9. Housekeeping completed (third level and truck door C-Zones)							
	THIRD LEVEL							
	1. Special assignments acknowledged							
*	2. Storage-tank level checked							
*	3. Core visually inspected							
	4. Instrument panel at hot cell checked							
	5. Inspection/testing of hoisting equipment							
*	6. Pool tools checked							
	SECOND LEVEL							
	1. Dummy load on Sola transformer checked							
	FIRST LEVEL							
*	1. Diesel mode switch in "Auto"							
*	2. Diesel fuel valve pointed "west"							
*	3. Diesel radiator protection steam on for outside temperature <35° F							
*	4. Diesel oil heater operation							

UCN-7494
(3 3-82)

Example 8.5.

8-4 Shift Daily Checksheet - ORR
(Inside Checks)

Page 2

	BASEMENT		FRI.	SAT.	SUN.	MON.	TUE.	WED.	THUR.
*	1. Transfer mode switch in "normal" (emergency power)								
*	2. Cell-ventilation instrument panel "C" normal								
	3. NOG seal-tank water level checked								
*	4. Degasifier:	vacuum (inches H_2O)							
		water flow							
		water level (main tank)							
M		pump, motors, and oil level							
	5. Imbedded aluminum vacuum line readings								
*	6. Pool Demineralizer:	pH and resistance (log)							
		counts (log)							
*	7. Reactor Demineralizer:	pH and resistance (log)							
		counts (log)							
*	8. Degasifier Demineralizer:	pH and resistance (log)							
		counts (log)							
	9. Shim-rod meter-stick reading								
M	10. Pumps and Motors:	pool demineralizer							
* M		facility							
M		pool cooling							
* M		process sump							
* M		Nash Hytor							
* M		fill and drain							
	11. Make-up water integrator reading logged								
*	12. KWH meter reading (logged)								
	13. Purge beam hole liners 1-6								

Example 8.5. (Continued)

(2) Cutie pies and survey meters, location and operation checked. Self-explanatory.

(3) Experiment panels checked and services completed. Refer to the 12 to 8 Shift Daily Check Sheet explanation.

(4) Gas mask supply checked. The clean gas mask supply is kept in a barrel located at the entrance to the 3rd level change room. There should be at least 15 clean masks available. When the supply becomes low, clean masks may be secured from the Industrial Hygiene Section at Building 3550. Used masks are kept in a barrel in the 3rd level change room. When a supply of used gas masks has accumulated, they must be checked by the building Health Physicist and tagged before being sent to the laundry.

(5) Background survey completed. Refer to Section 1.2.11 (Radiation Background Survey) in the ORR Operating Manual.

(6) "Reactor on" lights checked. Self-explanatory.

(7) Record data required by "water system checks." Refer to Example 8.9.

(8) Supply inventory check. Check the supplies in the control room annex (cabinet and emergency cabinet), barrels (gloves, shoe covers, and caps) located at the 3rd level change room entrance, blotter paper rolls located at the 3rd level and basement, and the plastic bag roll located at the 3rd level. Give the day shift supervisor a list of the needed supplies.

(9) Housekeeping completed (third level and truck door C-zones). Self-explanatory.

b. Third level

(1) Special assignments acknowledged. Refer to 12 to 8 Shift Daily Check Sheet explanation.

(2) Storage-tank level checked. Refer to 12 to 8 Shift Daily Check Sheet explanation.

(3) Core visually inspected. Refer to 12 to 8 Shift Daily Check Sheet explanation.

(4) Instrument panel at hot cell checked. Refer to 12 to 8 Shift Daily Check Sheet explanation.

(5) Inspection/testing of hoisting equipment. Refer to Example 8.22. This applies to the overhead 1- and 20-ton cranes.

(6) Pool tools checked. All frequently used tools should be checked for proper operating condition. Report any tool needing repairs to the Maintenance Coordinator.

c. Second level

(1) Dummy load on Sola transformer checked. Refer to 12 to 8 Shift Daily Check Sheet explanation.

d. First level

(1) Diesel mode switch in "AUTO." Refer to 12 to 8 Shift Daily Check Sheet explanation.

(2) Diesel fuel valve pointed west. Refer to 12 to 8 Shift Daily Check Sheet explanation.

(3) Diesel radiator protection steam on for outside temperatures <35°F. Refer to 12 to 8 Shift Daily Check Sheet explanation.

(4) Diesel oil heater operation. Refer to 12 to 8 Shift Daily Check Sheet explanation.

e. Basement

(1) Transfer mode switch in "normal" (emergency power). Refer to 12 to 8 Shift Daily Check Sheet explanation.

(2) Cell-ventilation instrument panel "C" normal. Refer to 12 to 8 Shift Daily Check Sheet explanation.

(3) NOG seal-tank water level checked. Refer to 12 to 8 Shift Daily Check Sheet explanation.

(4) Degasifier. Refer to 12 to 8 Shift Daily Check Sheet explanation.

(5) Imbedded aluminum vacuum line readings. Refer to Example 8.20.

(6) Pool demineralizer. Self-explanatory.

(7) Reactor demineralizer. Self-explanatory.

(8) Degasifier demineralizer. Self-explanatory.

(9) Shim-rod meter-stick readings noted. Refer to 12 to 8 Shift Daily Check Sheet explanation.

(10) Pumps and motors. Refer to 12 to 8 Shift Daily Check Sheet explanation.

(11) Make-up water integrator reading logged. Refer to Section 5.9.5 (Integrating Flow Meter for the ORR Demineralizer Water Make-up from Building 3004) in the ORR Operating Manual.

(12) KWH meter reading (logged). Self-explanatory.

7. <u>8 to 4 Shift Daily Check Sheet - ORR</u> (Outside Checks, Example 8.6)

a. Pool secondary cooling tower

(1) Basin level, screens, and ball-float valve checked. The normal basin level is approximately 12 in. The screen should be removed and cleaned whenever a noticeable amount of debris is deposited on the screen as indicated by the basin water level being at a much higher level than the sump water level.

The ball-float valve should operate freely and shut off the make-up water when raised to the upper position.

(2) pH, phosphate, total solids, and counts (logged). For the pH, phosphate, and total solids information, refer to 12 to 8 Shift Daily Check Sheet explanation.

A 1-ml sample of water is taken from the basin and counted on the scintillation counter (cpm/ml) as a check on primary water leakage into the secondary system.

(3) Secondary cooling pump and motor checked. Refer to 12 to 8 Shift Daily Check Sheet explanation.

(4) Tower fan, motor, and oil level checked. Refer to 12 to 8 Shift Daily Check Sheet explanation.

(5) Steam on for outside temperature <35°F. Refer to 12 to 8 Shift Daily Check Sheet explanation.

(6) Tower deiced. Refer to 12 to 8 Shift Daily Check Sheet explanation.

(7) Tower treatment added. Refer to Section 5.6.5 (The Secondary Cooling System) in the ORR Operating manual.

(8) Water condition checked (debris, slime, and algae). Self-explanatory.

(9) Acid pump and motor checked. Refer to 12 to 8 Shift Daily Check Sheet explanation.

(10) Phosphate pump and motor checked. Refer to 12 to 8 Shift Daily Check Sheet explanation.

8-4 SHIFT DAILY CHECKSHEET - ORR
(Outside Checks)

√ *Acknowledged and / or Operating properly*
X *Abnormal Condition Found*
NA *Not Applicable*
• *To be performed during shutdown*
M *Maintenance Item*

STARTING DATE

SHIFT

	OPERATOR'S INITIALS							
	POOL SECONDARY COOLING TOWER	**FRI.**	**SAT.**	**SUN.**	**MON.**	**TUE.**	**WED.**	**THUR.**
	1. Basin level, screens, and ball-float valve checked							
	2. pH, Phosphate, total solids, and counts (logged)							
M	3. Secondary cooling pump and motor checked							
M	4. Tower fan, motor, and oil level checked							
•	5. Steam on for outside temperature < 35° F							
	6. Tower de-iced							
	7. F16 water treatment (1 gal. added)							
	8. Water condition checked (debris, slime, and algae)							
M	9. Acid pump and motor checked							
	10. Phosphate pump and motor checked							
	AIR - CONDITIONER TOWER							
M •	1. Pump and fan checked							
•	2. Basin level checked							
•	3. Steam on for outside temperature < 35° F							
•	4. Tower de-iced							
•	5. pH, Phosphate, and total solids logged							
•	6. Fill acid tank as needed							
•	7. F16 water treatment (½ gal. added)							
	REACTOR PRIMARY PUMP HOUSE AND AREA							
M	1. Hand valves, check-valves, and 24 in. strainer checked							
M	2. Primary cooling pumps and motors checked							
•	3. Batteries on dc Nos. 1, 2, and 3 (log specific gravity)							
	4. Bypass filter area checked							
•	5. Steam and heaters on for outside temperature < 35° F							
M	6. Expansion joints and decay tank (top flange) checked							
•	7. KWH meter reading (logged)							
	STORAGE - TANK AREA							
•	1. Steam and heaters on for outside temperature < 35° F							

UCN-7493
(3 2-82)

Example 8.6.

8-4 SHIFT DAILY CHECKSHEET-ORR
(Outside Checks)

Page 2

	HEAT-EXCHANGER PIT AND AREA	FRI.	SAT.	SUN.	MON.	TUE.	WED.	THUR.
M	1. Heat-exchanger vibration normal							
*	2. Steam on for outside temperature < 35° F							
M	3. Reactor primary bypass valve checked (Sump No. 7)							
	REACTOR SECONDARY COOLING TOWER							
	1. pH, Phosphate, total solids, and counts (logged)							
	2. Basin level and screens checked							
M	3. Secondary cooling pumps checked							
*	4. Phosphate pump and motor checked							
	5. Instrument panel checked							
	6. Flow distribution (top of tower) checked							
M	7. Tower fans, motors, and oil level checked							
M	8. Acid pump and motor checked							
M	9. Bypass valve checked							
*	10. Steam on for outside temperature < 35° F							
	11. Tower de-iced							
	12. F16 water treatment (7 gal. added)							
	13. Water condition checked (debris, slime, and algae)							
	14. KWH meter reading (logged)							
M *	Sumps and pumps (Nos. 1, 2, 3, 4, 5, and 6) checked							
	Water samples from sumps Nos. 4, 5, and 6 (counts logged)							
	Process drain sumps Nos. 1, 245, and 206 checked - counts logged							
	CELL VENTILATION FILTER PIT AND BLOWER AREA							
*	1. Air flow through radiation detector							
*	2. Radiation detector housing heater on for outside temperature < 35° F							
*	3. ΔP across filters normal							
*	4. Cell ventilation blower normal							
*	5. Steam blower slight rotation of shaft for outside temperature < 35° F (cell vent)							
*	6. Seal tank pit water accumulation checked							
	NORMAL OFF-GAS FILTER PIT AREA							
*	ΔP across filters normal							
*	Filter pit seal (water trap) checked							
	Shift Engineer's verification that the checks (inside and outside) have been completed and that appropriate action has been taken to alleviate any abnormal condition found.							

* *To be checked everyday*

Example 8.6. (Continued)

b. Air-conditioner tower

For items No. (1), (2), and (3), refer to 12 to 8 Shift Daily Check Sheet explanation.

(4) Tower treatment added. Refer to Section 5.6.7 (ORR Air-Conditioning Cooling Tower Basin) in the ORR Operating Manual.

c. Reactor primary pumphouse and area

(1) Hand valves, check valves, and 24-in. strainer checked. Check for noise, vibration, and water leaks. The hand valves should be locked with a chain in their respective positions.

(2) Primary cooling pumps and motors checked. Refer to 12 to 8 Shift Daily Check Sheet explanation.

(3) Batteries on dc Nos. 1, 2, and 3 (log specific gravity). Check the specific gravity of all the batteries of each bank. Place the lowest reading specific gravity of each bank in the ORR logbook. The battery voltage and amperage of the three banks are also logged. Refer to Section 7.5.2 (dc Pony Motors) in the ORR Operating Manual.

(4) Bypass filter area checked. Observe area for water leaks and abnormal noise.

(5) Steam and heaters on for outside temperature <35°F. Refer to 12 to 8 Shift Daily Check Sheet explanation.

(6) Expansion joints and decay tank (top flange) checked. Observe area for water leaks and abnormal noise.

(7) kWh meter reading (logged). Self-explanatory.

d. Storage-tank area

Refer to 12 to 8 Shift Daily Check Sheet explanation.

e. Heat-exchanger pit and area

Refer to 12 to 8 Shift Daily Check Sheet explanation.

f. Reactor secondary cooling tower

(1) pH, phosphate, and total solids logged. For the pH, phosphate, and total solids information, refer to 12 to 8 Shift Daily Check Sheet explanation. A 1-ml sample of water taken from the basin and counted on the scintillation counter (cpm/ml) as a check on primary water leakage into the secondary system.

(2) Basin level and screens checked. The normal water level of the basin is approximately 48 in. The screens should be removed and cleaned whenever a noticeable amount of debris is deposited on the screen as indicated by the water being at a much higher level on the basin side.

(3) Secondary cooling pumps checked. Refer to 12 to 8 Shift Daily Check Sheet explanation.

(4) Phosphate pump and motor checked. Refer to 12 to 8 Shift Daily Check Sheet explanation.

(5) Instrument panel checked. Refer to 12 to 8 Shift Daily Check Sheet explanation.

(6) Flow distribution (top of tower) checked. Observe the water level at the top of each section. If there is an appreciable difference in the two, an adjustment will be made to equalize the flows.

(7) Tower fans, motors, and oil level checked. Note any noise and/or vibration level changes in operation of the fans and motors. Observe any excess vibration of the tower structure which would be an indication of improper operation of the tower fans and/or motors. The oil level is observed in the sight glass on the west side of the tower for the respective fan. The oil level should be greater than the low oil level mark.

(8) Acid pump and motor checked. Refer to 12 to 8 Shift Daily Check Sheet explanation.

(9) Bypass valve checked. Refer to 12 to 8 Shift Daily Check Sheet explanation.

(10) Steam on for outside temperature <35°F. Refer to 12 to 8 Shift Daily Check Sheet explanation.

(11) Tower deiced. Refer to 12 to 8 Shift Daily Check Sheet explanation.

(12) Tower treatment added. Refer to 12 to 8 Shift Daily Check Sheet explanation.

(13) Water condition checked (debris, slime, and algae). Self-explanatory.

(14) kWh meter reading (logged). Self-explanatory.

(15) Sumps and pumps (Nos. 1, 2, 3, 4, 5, 6, and 9) checked. Refer to 12 to 8 Shift Daily Check Sheet explanation.

(16) Water samples from sumps Nos. 4, 5, and 6 (counts logged). Take a 1-ml sample of water with a 15-min decay time and count on the scintillation counter (cpm/ml) as a check on leakage of reactor primary water. The sump water should be at the lowest when the samples are taken.

(17) Process drain sumps Nos. 1, 245, and 206 checked - counts logged. Check the sumps for an abnormal flow of water. Take a 1-ml sample of water from each sump and count on the scintillation counter (cpm/ml). Enter the results in the ORR logbook.

g. Cell-ventilation filter pit and blower area

For items No. (1), (2), (3), (4), and (5), refer to 12 to 8 Shift Daily Check Sheet explanation.

(6) Seal tank pit water accumulation checked. The pit doesn't contain a drain; therefore, the water that accumulates must be siphoned or pumped out with a portable sump pump.

h. Normal off-gas filter pit area

(1) P across filters normal. Self-explanatory.

(2) Filter pit seal (water trap) checked. Refer to Section 6.2.3 (Filter System) in the ORR Operating Manual.

i. The shift supervisor signs the check sheets to verify that the checks (inside and outside) have been completed and that appropriate action has been taken to alleviate any abnormal condition found.

8. 4 to 12 Shift Daily Check Sheet - ORR (Inside Checks, Example 8.7)

NOTE: Many of the 4 to 12 shift daily checks (inside and outside) are identical to the ones on the previously listed 12 to 8 Shift Daily Check Sheets (Examples 8.3 and 8.4). On the checks that are identical, a reference will be made ("Refer to the 12 to 8 Shift Daily Check Sheet explanation"), with reference to the ORR Operating Manual for the respective information.

a. General and miscellaneous

For items No. (1) and (2), refer to the 12 to 8 Shift Daily Check Sheet explanation.

(3) Weekly checks completed. Refer to Example 8.18.

b. Third level

For items No. (1) and (2), refer to 12 to 8 Shift Daily Check Sheet explanation.

(3) Flashlights in control room operable. There should be at least four operable flashlights in the control room at the beginning of each shift. New batteries for the flashlights are kept in the control room annex cabinet.

For items No. (4) and (5), refer to the 12 to 8 Shift Daily Check Sheet explanation.

4-12 SHIFT DAILY CHECKSHEET - ORR
(Inside Checks)

✓ *Acknowledged and/or Operating Properly*
X *Abnormal Condition Found*
NA *Not Applicable*
* *To be Performed During Shutdown*
M *Maintenance Item*

STARTING DATE

SHIFT

	OPERATOR'S INITIALS							
	GENERAL AND MISCELLANEOUS	**WED.**	**THUR.**	**FRI.**	**SAT.**	**SUN.**	**MON.**	**TUE.**
*	1. Continuous air monitors and Monitrons operating properly							
	2. Experiment panels checked and services completed							
	3. Weekly checks completed							
	THIRD LEVEL							
	1. Special assignments acknowledged							
*	2. Storage-tank level checked							
*	3. Flashlights in control room operable							
*	4. Core visually inspected							
	5. Instrument panel at hot cell checked							
	6. Building negative pressure							
	SECOND LEVEL							
	1. Building negative pressure (static)							
	2. Dummy load on Sola transformer							

UCN-7494A
(3 3-82)

Example 8.7.

4-12 Shift Daily Checksheet - ORR
(Inside Checks)

Page 2

	FIRST LEVEL		WED.	THUR.	FRI.	SAT.	SUN.	MON.	TUE.
*	1. Diesel mode switch in "Auto"								
*	2. Diesel fuel valve pointed West								
	3. Building negative pressure:	North							
		South							
*	4. Diesel radiator protection steam on for outside temperature $< 35^{\circ}$ F								
	BASEMENT								
*	1. Transfer mode switch in "Normal"								
*	2. Cell-ventilation instrument panel "C" normal								
*	3. NOG seal tank water level checked								
*	4. Degasifier:	vacuum (inches H_2O)							
*		water flow							
*		water level (main tank)							
* M		pump, motor, and oil level							
	5. Shim-rod meter stick readings								
M	6. Pumps and Motors:	pool demineralizer							
* M		facility							
M		pool cooling							
* M		process sump							
* M		Nash Hytor							
* M		fill and drain							

Example 8.7. (Continued)

(6) Building negative pressure. Refer to Section 7.2.4 (Building Cell-Ventilation System, Routine Checks) in the ORR Operating Manual.

c. Second level

(1) Building negative pressure (static). Refer to Section 7.2.4 (Building Cell-Ventilation System, Routine Checks) in the ORR Operating Manual.

(2) Dummy load on Sola transformer. Refer to the 12 to 8 Shift Daily Check Sheet explanation.

d. First level

For items (1) and (2), refer to the 12 to 8 Shift Daily Check Sheet explanation.

(3) Building negative pressure. Refer to Section 7.2.4 (Building Cell-Ventilation System, Routine Checks) in the ORR Operating Manual.

For item (4), refer to the 12 to 8 Shift Daily Check Sheet explanation.

e. Basement

Refer to the 12 to 8 Shift Daily Check Sheet for the respective item explanation.

9. <u>4 to 12 Shift Daily Check Sheet - ORR</u> (Outside Checks, Example 8.8)

a. Pool secondary cooling tower

Refer to the 12 to 8 Shift Daily Check Sheet explanation.

b. Air-conditioner tower

Refer to the 12 to 8 Shift Daily Check Sheet explanation.

c. Reactor primary pumphouse and area

For items (1), (2), and (3), refer to the 12 to 8 Shift Daily Check Sheet explanation.

For item (4), refer to the 12 to 8 Shift Daily Check Sheet explanation.

4 - 12 SHIFT DAILY CHECKSHEET - ORR
(Outside Checks)

✓ *Acknowledged and/or Operating Properly*
× *Abnormal Condition Found*
NA *Not Applicable*
* *To be performed during shutdown*
M *Maintenance Item*

STARTING DATE

SHIFT

	OPERATOR'S INITIALS							
	POOL SECONDARY COOLING TOWER	**WED**	**THUR.**	**FRI**	**SAT.**	**SUN.**	**MON.**	**TUE.**
	1. Basin level checked							
	2. pH, Phosphate, and total solids logged							
M	3. Secondary cooling pump and motor checked							
M	4. Tower fan, motor, and oil level checked							
*	5. Steam on for outside temperature < 35° F							
	6. Tower de-iced							
M	7. Acid pump and motor checked							
	8. Phosphate pump and motor checked							
	AIR - CONDITIONER TOWER							
M *	1. Pump and fan checked							
*	2. Basin level checked							
*	3. Steam on for outside temperature < 35° F							
*	4. Tower de-iced							
	5. Phosphate pump and motor checked							
	REACTOR PRIMARY PUMP HOUSE AND AREA							
M	1. Primary cooling pumps and motors checked							
M	2. Check-valves checked							
*	3. Batteries on dc Nos. 1, 2, and 3 (log specific gravity)							
*	4. Steam and heaters on for outside temperature < 35° F							

UCN-7493 A
(3 2-82)

Example 8.8.

4 - 12 SHIFT DAILY CHECKSHEET-ORR

(Outside Checks)

Page 2

	STORAGE - TANK AREA	WED.	THUR.	FRI.	SAT.	SUN.	MON.	TUE.
•	1. Steam and heaters on for outside temperature < 35° F							
	HEAT - EXCHANGER PIT AND AREA							
M	1. Heat - exchanger vibration normal							
•	2. Steam on for outside temperature < 35° F							
M	3. Reactor primary bypass valves checked (sump No. 7)							
	REACTOR SECONDARY COOLING TOWER							
	1. pH, Phosphate, and total solids logged							
M	2. Basin level and bypass valve checked							
M	3. Secondary cooling pumps and motors checked							
	4. Instrument panel checked							
	5. Acid pump and motor checked							
M	6. Steam on for outside temperature < 35° F							
	7. Tower de-iced							
	8. Phosphate pump and motor checked							
•	Sumps and pumps (Nos. 1, 2, 3, 4, 5, and 6) checked							
	CELL VENTILATION FILTER PIT AND BLOWER AREA							
•	1. Air flow through radiation detector							
•	2. Radiation detector housing heater on for outside temperature < 35° F							
•	3. Δ p across filters normal							
	4. Δ p across filters recorded (logged)							
•	5. Cell ventilation and POG blowers normal							
•	6. Steam blower slight rotation of shaft for outside temperature < 35° F							
•	7. Backflow preventer checked							
	NORMAL OFF-GAS FILTER PIT AREA							
•	Δ P across filters normal							
•	Δ P across filters recorded (logged)							
	Shift Engineer's verification that the checks (inside and outside) have been completed and that appropriate action has been taken to alleviate any abnormal condition found.							

Example 8.8. (Continued)

d. Storage-tank area

Refer to the 12 to 8 Shift Daily Check Sheet explanation.

e. Heat-exchanger pit and area

Refer to the 12 to 8 Shift Daily Check Sheet explanation.

f. Reactor secondary cooling tower

Refer to the 12 to 8 Shift Daily Check Sheet explanation.

g. Cell-ventilation filter pit and blower area

For items No. (1), (2), and (3), refer to the 12 to 8 Shift Daily Check Sheet explanation.

(4) ΔP across filters recorded (logged). Refer to Section 7.2.4 (Building Cell-Ventilation System, Routine Checks) in the ORR Operating Manual.

For items (5) and (6), refer to the 12 to 8 Shift Daily Check Sheet explanation.

(7) Backflow preventer checked. The drain pipe on the south side of the backflow preventer hutment should be free of any water loss. A water loss indicates the failure of the backflow preventer and should be reported immediately to the Maintenance Coordinator.

h. Normal off-gas filter pit area.

(1) ΔP across filters normal. Self-explanatory.

(2) ΔP across filters recorded (logged). Self-explanatory.

i. The shift supervisor signs the check sheets to verify that the checks (inside and outside) have been completed and that appropriate action has been taken to alleviate any abnormal condition found.

10. ORR Daily Water System Checks (Example 8.9)

    This form is completed by the operator making the routine checks each day on the 8 to 4 shift.

11. ORR Secondary Water System Checks (Example 8.10)

    This form is completed by the operator making routine checks each day on the 8 to 4 shift.

12. Demineralizer Make-Up Water to ORR (Example 8.11)

    This form is completed by the operator making routine checks each day on the 8 to 4 shift.

13. Daily Routine Instrument Checklist for ORR (Example 8.12)

    This form is completed by the instrument mechanic (or shift supervisor on weekends and holidays) making the instrument checks each day on the 8 to 4 shift.

14. Graph of Shim Rod Position vs Time (Example 8.13)

    The equalized rod position (shim rods 3, 4, 5, and 6) at 12:30 a.m. each day is plotted for one complete cycle. Any shutdowns are also indicated as well as the initial critical rod position at the beginning of a cycle.

ORR DAILY WATER SYSTEM CHECKS

DAY	
OPERATOR	

REACTOR SYSTEM

			CONTROL ROOM	PUMP HOUSE
Tank Δ P	psi	Bypass filter flow (gpm)		
Reactor inlet water line pressure	psi	Primary flow (gpm)		
Facility cooling flow	gpm	Reactor exit temp. °F		

North demineralizer flow gpm, Integrator ( ) X (1.5) = gallons

South demineralizer flow gpm, Intergrator ( ) X (1.5) = gallons

Degasifier demineralizer flow at gpm = gallons for 24-hr. period (8 A.M. – 8 A.M.)

Strainer Δ P = psi Pump House Strainer Δ P = psi Control Room

PRIMARY PUMPS		# 1	# 2	# 3	SHUTDOWN	
EXIT psi						
INLET psi						
MOTOR AMPS						
BEARING TEMP.	NORTH					
	SOUTH					

Secondary mean temperature °F Pump exit (PI 56) psi Return line (PI) psi

POOL SYSTEM

Primary flow gpm Secondary flow gpm

DEMINERALIZER Flow gpm Integrator ( ) X (1.8) = gallons

OTHER CHECKS

BEAM HOLE LINERS PRESSURIZED (SCHEDULED DURING A SHUTDOWN

LARGE FACILITY LEAK DETECTORS

APPROVED BY ENGINEER

UCN-3496
(3 3-84)

Example 8.9.

ORR SECONDARY WATER SYSTEM

		REACTOR				POOL			
Date	Time	pH	Phos	Micro Mhos	Remarks	pH	Phos	Micro Mhos	Remarks

UCN-14768
(3 7-82)

Example 8.10.

		AC				BSR			
Date	Time	pH	Phos	Micro	Remarks	pH	Phos	Micro	Remarks

UCN-14768

Example 8.10. (Continued)

DEMINERALIZED MAKE-UP WATER TO ORR

19 ____

Date	Day of Week	Time	Operator	Shift	Meter Reading	△ Reading x 1.13	△ Reading x 1.13 / Time in Minutes
	MONDAY						
	TUESDAY						
	WEDNESDAY						
	THURSDAY						
	FRIDAY						
	SATURDAY						
	SUNDAY						

Average for Week = _____

UCN-14765
(3 7-82)

Example 8.11.

DAILY ROUTINE INSTRUMENT CHECK LIST FOR _____

DATE	TIME ☐ AM ☐ PM	INST. TECH.	SHIFT ENGINEER
HEAT POWER LEVEL ☐ kw ☐ Mw	CHARTS ON ALL RECORDERS		INK ON ALL RECORDERS

GAMMA CHAMBERS (% Power)				LOG N CHANNELS (% Power)		SAFETY CHANNEL RECORDERS (% Power)		
#1	SW. POS.	#2	SW. POS.	#1	#2	#1	#2	#3

Magnet Amplifiers	1	2	3	4	5	6	
A							
B							
Total							
Posted Op. 1							

Sigma Amplifiers	#1 Safety	#2 Safety	#3 Safety	Period	
Heat to Cath. St.					
B + Unregulated					
B + Regulated					
B + Current					
Power (meter)					
Sensitivity SW Pos.					

REMARKS

UCN-3666
(3 6-66)

Example 8.12.

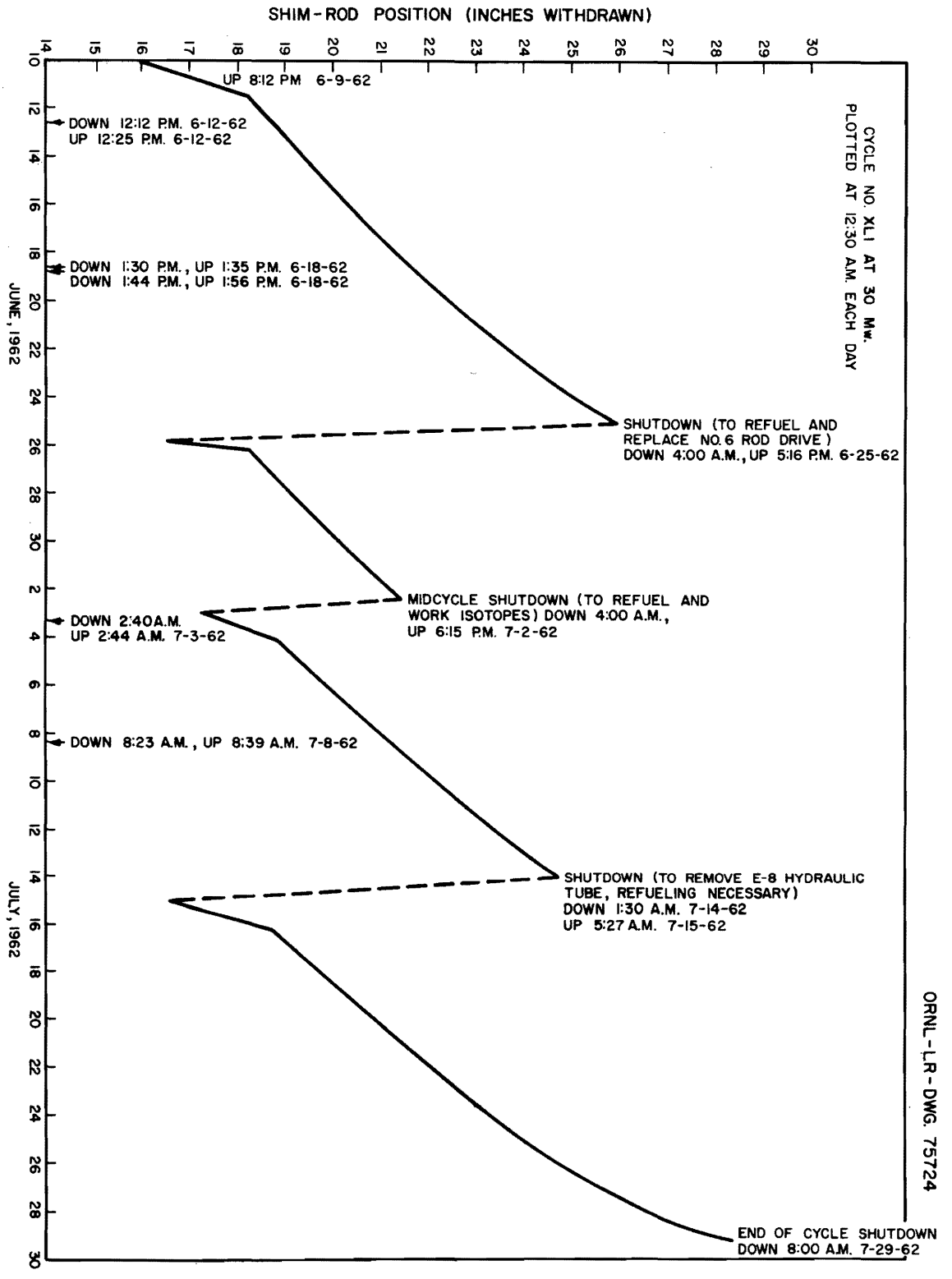

Example 8.13. Graph of shim rod position versus time

15. ORR Daily Summary (Example 8.14)

The daily summary is compiled from the daily check sheets. This summary is completed by, or under the direction of, the shift supervisor on the 12 to 8 shift. The following is a detailed description of the data required for this summary.

a. Hours operated - hours down. These two columns are filled in from the data recorded on the ORR accumulated instrument power data sheet.

b. MWh, instrument. These data are taken from the ORR accumulated instrument power sheet and are the total instrument power accumulated by each shift.

c. MWh, heat. This is a record of the total heat power accumulated by each shift. The data come from the ORR Hourly Readings sheet.

d. Accumulated instrument power (MWh). The accumulated power is found by adding the day's total to the previous accumulated total.

e. Reactor, degasifier, and pool demineralizer data. This is a summary of the data recorded in the logbook concerning the condition of the demineralizers.

f. Coolant. This information is obtained both from information in the logbook compiled from the water tests and by averaging the hourly temperature readings on the ORR Hourly Readings data sheet.

The ORR Daily Summary (Example 8.14), the ORR Hourly Readings for the 12-8, 8-4, and 4-12 shifts (Example 8.1), the ORR power changes and accumulated megawatt hours (Example 8.2), the Daily Routine Instrument Checklist for ORR (Example 8.12), and the Daily 3004 Demineralizer Data are stapled together and filed in the Day Shift Supervisor's office. Also attached to these papers are the shift notes for the day, signed by the respective shift supervisors. The shift notes are the record from which portions of the shift log are written. The notes are usually of a non-routine nature which are associated with activities such as problems or a work project as an example. Shifts on which the shift activities are only routine do not require shift notes.

ORR DAILY SUMMARY

DAY NO.	DATE	ENGINEER

I. POWER

Shift	Hours Operated	Hours Down	MW Hrs. Instrument	MW Hrs. Heat	Accumulated Instrument Power (MW Hrs.)
12-8					Previous Total
8-4					Day's Total
4-12					Current Total
Total					

II. DEMINERALIZERS

	N/S Reactor Demineralizers			Degasifier Demineralizer				Pool Demineralizer		
	pH	Res. ($\times 10^6$)	c/m/ml ($\times 10^3$)	Ph	Res.	c/m/ml ($\times 10^3$)		pH	Res.	c/m/ml ($\times 10^3$)
Inlet							Inlet			
Cation							Cation			
Exit							Exit			
N. Days Throughput (gals.)				Day's Throughput (gals.)				Day's Throughput (gals.)		
S. Day's Throughput (gals.)										

III. COOLANT

	Reactor	Pool		Secondary Reactor	Secondary Pool
Inlet T	°F	°F	pH		
Exit T	°F	°F	CrO_4		
Δt	°F	°F	TS		
			c/m/ml		

***NOTE:** Use averages for the three shifts wherever possible.*

IV. COMMENTS

UCN-1696
(3 10-71)

Example 8.14.

8.1.3. Other Routine Report Forms

The following forms are used to record various checks and data. Most of them are self-explanatory, so a detailed description will not be given. The forms are presented in the following sequence.

1. ORR Startup Checklist (Example 8.15)

   All items on this list must be checked prior to each reactor startup (exclusive of a startup following an accidental shutdown, refer to Section 1.4.4, "Startup Following an Unscheduled Shutdown" and Example 1.3, "Checklist for ORR Restart Following an Unscheduled Shutdown," in the ORR Operating Manual) or series of critical runs. The checks are made by the shift supervisor.

2. Background Survey (Example 8.16)

   The areas indicated on this form should be monitored by Operations Division personnel after each reactor startup following an extended shutdown. A routine check is made by Operations Division personnel each Friday on the 8 to 4 shift.

3. ORR Shutdown Checklist (Example 8.17)

   Items on the ORR Shutdown Checklist should be completed after the reactor is shut down.

4. Beam Hole Status Sheet (Example 8.18)

   Changes in the status of beam-hole plugs and liners (filled, empty, on purge, etc.) should be recorded on this form by the shift supervisor who made the change.

5. Beam Hole Liner N_2 Purge System (Example 8.19)

   These checks are performed each Friday on the 8 to 4 shift.

6. ORR Replacement Loading (Example 8.20)

   The replacement loading is prepared by the Reactor Supervisor. It is used only in the event the reactor is shut down and cannot be restarted due to xenon poisoning.

ORR STARTUP CHECKLIST

Requirements

1. The following personnel are required for a reactor startup: (1) a console operator and (2) a supervisor in charge of activities.

2. The supervisor in charge must follow the startup until the power level of N_L is attained; a change in personnel may be made at this time.

3. The supervisor in charge of the startup must verify that each item on the checklist is acknowledged by recording his initials on the line opposite the item.

Date	_____	_____	_____	_____
Shift	_____	_____	_____	_____
Type of Run (Critical - "C," Power - "P," Training - "T")	_____	_____	_____	_____

A. Reactor Vessel

1. All core pieces in place and properly seated	_____	_____	_____	_____
2. Experiments properly arranged in reactor vessel	_____	_____	_____	_____
3. Hold-down arms properly seated and locked	_____	_____	_____	_____
4. All rods checked for "freeness"	_____	_____	_____	_____
5. All work in the vessel completed	_____	_____	_____	_____
6. Core inspected and inventory check sheet signed	_____	_____	_____	_____
7. Access cover in place and secured	_____	_____	_____	_____

Example 8.15.

B. Experiment Facilities

1.	All experiment changes completed	____	____	____	____
2.	Experiment information sheets completed and signed by Reactor Supervisor	____	____	____	____
3.	Individual Experiment Safety Check Sheets completed by I&C engineer	____	____	____	____
4.	All experimenters informed of startup and ready for full-power operation	____	____	____	____
5.	Special startup requests noted	____	____	____	____

C. Reactor Primary-Water System

1.	Reactor system filled and vented	____	____	____	____
2.	Reactor water flow established (ensure that access cover is secured)	____	____	____	____
3.	Reactor-primary temperature-control system in AUTOMATIC	____	____	____	____
4.	Reactor-primary temperature setpoint selected for 117°F	____	____	____	____
5.	Flow through bypass filters	____	____	____	____
6.	All disconnects on dc units 1, 2, and 3 CLOSED and minimum requirements for this system established for power operation	____	____	____	____
7.	North and/or south demineralizer in service	____	____	____	____
8.	Degasifier demineralizer in service	____	____	____	____
9.	Degasifier in service	____	____	____	____
10.	Cooling water to north facility	____	____	____	____
11.	Cooling water to south facility	____	____	____	____
12.	Cooling water to horizontal beam holes, HN-1 and HN-4 (refer to status sheet)	____	____	____	____

Example 8.15. (continued).

D. Reactor Secondary-Water System

1. Reactor secondary system filled, vented, and ready for service	____	____	____	____
2. Reactor-secondary temperature-control system in AUTOMATIC	____	____	____	____
3. Tower fans in AUTOMATIC	____	____	____	____
4. Reactor-secondary temperature setpoint established	____	____	____	____
5. All subsystems ready for service (acid, phosphate, and blowdown)	____	____	____	____

E. Pool Primary-Water System

1. Pool primary system filled, vented, and ready for service	____	____	____	____
2. Pool-primary temperature-control system in AUTOMATIC	____	____	____	____
3. Pool-primary temperature setpoint selected for 90°F	____	____	____	____
4. Reactor pool filled to proper level	____	____	____	____
5. Pool demineralizer in service	____	____	____	____
6. All pool alarms cleared	____	____	____	____

F. Pool Secondary-Water System

1. Pool secondary system filled, vented, and ready for service	____	____	____	____
2. Pump and tower fan controls in AUTOMATIC	____	____	____	____
3. All subsystems (acid, phosphate, and blowdown ready for service)	____	____	____	____

Example 8.15. (continued).

G. Subpile Room

1.	Demineralized-water-supply valves to shim-rod drive units OPEN	____	____	____	____
2.	Demineralized-water-supply valves to annulus of bottom plug OPEN	____	____	____	____
3.	Servo tachometer plug connected to servo's rod-drive motor	____	____	____	____

H. Radiation Survey

1.	All modules on Facility Radiation and Contamination Alarm System normal	____	____	____	____
2.	Shielding blocks for HB-1 through HB-5 in place*	____	____	____	____
3.	HB-6 shield closed and key in possession of Operations*	____	____	____	____
4.	Shielding blocks etc., for HN-1 and HN-4 in place*	____	____	____	____
5.	Building containment check acceptable**	____	____	____	____
6.	Pipe chase shielding blocks in place	____	____	____	____
7.	HS facility - containment cell inspected	____	____	____	____
8.	Health Physicist informed of startup	____	____	____	____
9.	Reactor and pool primary-water electrometers operating	____	____	____	____
10.	Fission chambers inserted and controls in AUTOMATIC	____	____	____	____
11.	Pool-side count-rate speaker deactivated	____	____	____	____

*Or collimator flooded with water and valves locked open
**Before start of cycle

Example 8.15. (continued).

I. Instrumentation

1. All electrical-power switches in the proper mode:				
a. L-31 through L-42, plus L-46, in ON	____	____	____	____
b. LX-1, -2, -4, -5, -6, and -8 in ON	____	____	____	____
c. L-1 through L-16 in ON	____	____	____	____
2. Air supply to pneumatic instruments normal (approximately 90 psig)	____	____	____	____
3. All instruments turned on at least 1/2 h prior to operation of the reactor	____	____	____	____
4. Ionization chamber positions normal (check log for any changes during shutdown)	____	____	____	____
5. a. With the log-N amplifier on OPERATE, depress the negative voltage inhibit push button on the log-N chamber power supply and observe that an upscale reading occurs on the log-N recorder along with a positive period indication on the log-N period recorder.	____	____	____	____
b. No. 1 log-N chamber power supply at posted values: +____ V, -____ V, ±10%	____	____	____	____
6. a. With the log-N amplifier on OPERATE, depress the negative voltage inhibit push button on the log-N chamber power supply and observe that an upscale reading occurs on the log-N recorder along with a positive period indication on the log-N period recorder.	____	____	____	____
b. No. 2 log-N chamber power supply at posted values: +____ V, -____ V, ±10%	____	____	____	____
7. No. 1 log-N amplifier calibrated, recorder readouts normal, and calibrated switches on GROUND	____	____	____	____

Example 8.15. (continued).

8. No. 2 log-N amplifier calibrated, recorder readouts normal, and calibrated switches on GROUND	____	____	____	____
9. Safety channels 1, 2, and 3 calibrated (before start of cycle)	____	____	____	____
10. No. 1 counting-rate channel's PHS curve not older than start of present cycle	____	____	____	____
11. No. 2 counting-rate channel's PHS curve not older than start of present cycle	____	____	____	____
12. No. 1 counting rate calibrated for 60 cycles and "calibrate-use" switch set on USE	____	____	____	____
13. No. 2 counting rate calibrated for 60 cycles and "calibrate-use" switch set on USE	____	____	____	____
14. a. On the south gamma composite amplifier (No. 2), push the recessed "scram test" button and observe that the associated recorder drives $\geq$150 scale reading.	____	____	____	____
b. On the north gamma composite amplifier (No. 1), push the recessed "scram test" button and observe that the associated recorder drives $\geq$150 scale reading.	____	____	____	____
15. Shim-rod-drive safety switch and performance checkout test performed following any work on the drive units and before start of cycle	____	____	____	____
16. Magnet amplifier currents normal	____	____	____	____
17. a. Select a range on the micromicroammeter to give a scale reading of $\geq$20%; depress the negative voltage inhibit push button on the servo chamber power supply and observe that an upscale reading occurs on the micromicroammeter.	____	____	____	____
b. Micromicroammeter range switch set on proper scale (10×10^{-5} for full power)	____	____	____	____

Example 8.15. (continued).

18. Public-address system operating properly		_____	_____	_____	_____
19. Rods raised off seat positions and scrammed with the Jordon button on each of the three sigma amplifiers	a.	_____	_____	_____	_____
	b.	_____	_____	_____	_____
	c.	_____	_____	_____	_____
20. Rods raised off seat positions and scrammed with each log-N amplifier's "period scram test" button	a.	_____	_____	_____	_____
	b.	_____	_____	_____	_____
21. Both log-N's "calibrate-operate" switch on OPERATE	a.	_____	_____	_____	_____
	b.	_____	_____	_____	_____
22. An experiment scram checked (for beginning of cycle checks only)		_____	_____	_____	_____

J. Other Checks

1. Next operating cycle schedule reviewed and understood	_____	_____	_____	_____
2. Ten-minute prestartup announcement made over public-address system	_____	_____	_____	_____
3. Core inspected at 6 MW and inventory sheet signed	_____	_____	_____	_____
4. All required instrument channels responding properly during the startup	_____	_____	_____	_____
5. Magnet-amplifier currents posted 1 h after equilibrium at 30-MW operation (with safety-recorder readouts on 100)	_____	_____	_____	_____

Example 8.15. (continued).

K. Low Power, Low Flow Tests*

1. Microammeter (monitoring the "low-level" scram of the flow parameter) ≥ 10	____	____	____	____
2. Microammeter (monitoring the "low-level" scram of the ΔP parameter) ≥ 10	____	____	____	____
3. Microammeter (monitoring the "low-level" scram circuit of the "test" switch) ≥ 10	____	____	____	____

L. Startup Personnel

1. Shift supervisor to N_L	____	____	____	____
2. Assisting supervisor to N_L	____	____	____	____
3. Operator to N_L	____	____	____	____
4. Observers to N_L	____	____	____	____
5. Shift supervisor to full power	____	____	____	____
6. Assisting supervisor to full power	____	____	____	____
7. Operator to full power	____	____	____	____
8. Observers to full power	____	____	____	____
9. Names recorded on Reactor Startups record sheet	____	____	____	____

*This section applicable for runs at low power with low flow. Refer to Section 2.6.9 of the ORR Operating Manual.

Example 8.15. (continued).

BACKGROUND SURVEY

PERFORMED BY	REASON	DATE	TIME

NOTE: This survey is to be performed each Friday and after the startup of the reactor at the beginning of a cycle. A survey meter (G-M counter) shall be used for this survey, with a cutie pie used when survey meter goes off scale.

AREA		mr/hr MAXIMUM BACKGROUND	mr/hr PRE-SET LOCATION
1. POOLS:			
a. East	TAKEN AT SURFACE NEAR POOL WALLS		
b. Center			
c. West			
d. Top of Bridge			
e. Above Hydraulic Tube			
2. HOT CELL:			
a. North Cell			
1. Window			
2. Access Holes (Not including top of cell)			
3. Walls (Up to height of 6 feet)			
b. South Cell			
1. Window			
2. Access Holes (Not including top of cell)			
3. Walls (Up to height of 6 feet)			
3. WALKWAYS:			
a. Third Level, South			
b. Third Level, North			
c. Second Level, South			
d. Second Level, North			
e. Second Level, West			
f. First Level, South			
g. First Level, East			
h. First Level, North			
i. First Level, West			
4. EXPOSED EXPERIMENTAL EQUIPMENT (PIPING, ETC.) ON 2nd. LEVEL BALCONY:	North		
	South		
5. FACILITIES:			
a. North Facility			
b. South Facility			
c. HB-1			
d. HB-2			
e. HB-3			
f. HB-4	1		
	2		
g. HB-5			
h. HB-6			
6. BASEMENT:			
a. Pipe Tunnel			
b. Sub-Pile Room Door			
1. Near Reactor Bottom Plug			
c. North Walkway			
d. South Walkway			
e. Pool Heat Exchanger Area			
f. Beam Hole Plug Storage Area			

UCN-2276
(3 8-71)

Example 8.16.

AREA	mr/hr MAXIMUM BACKGROUND	mr/hr PRE-SET LOCATION
6. BASEMENT (Continued)		
g. Degasifier		
1. Air Separator		
2. Water Tank		
h. Pneumatic Tube Laboratory		
i. Reactor North Demineralizer		
1. Anion		
2. Cation		
j. Reactor South Demineralizer		
1. Anion		
2. Cation		
k. Degasifier Demineralizer		
1. Anion		
2. Cation		
l. Pool Demineralizer		
1. Anion		
2. Cation		
7. PUMP HOUSE:		
a. No. 1 Pump Cell		
b. No. 2 Pump Cell		
c. No. 3 Pump Cell		
d. Shutdown Pump (Electric) Cell		
e. Emergency Pump (Gasoline) Cell		
8. REACTOR HEAT EXCHANGER PIT:		
a. Entrance		
b. North Side of Pit		
c. South Side of Pit		
9. REACTOR WATER ACTIVITY		
10. POOL WATER ACTIVITY		
11. SUMP COUNTS		
a. No. 5 (Decay Tank)	c/m/ml	
b. No. 4E (Expansion Pit)	c/m/ml	
c. No. 4W (Expansion Pit)	c/m/ml	
d. No. 6 (3042)	c/m/ml	

SHIFT ENGINEER

Example 8.16. (Continued)

ORR SHUTDOWN CHECK LIST

INITIAL		DATE
	1. Scram handle in "scram" position.	
	2. Key switch in "off" and key removed.	
	3. All rods in seat position and seat lights "on".	
	4. All rod-mode switches in "off" position.	
	5. Servo demand at N_L.	
	6. After 30-Mw operation:	
	a. Continue normal circulation of reactor water for 30 min. or until the temperature of the reactor water is equal to the pool temperature; i.e., $78^\circ F$ < outlet temperature $<100^\circ F$.	
	b. Completethe "test" on emergency cooling units (end-of-cycle shutdowns only).	
	c. DC Unit No. 1	
	(1) Verification of proper operation (under load) of the charger, batteries, and DC motor and monitoring circuits.	
_____	DC motor turns pump after AC motor stops.	
_____	Hi-lo, curr-volt, DC-1 alarm occurs.	
	(a) Battery amps _____	
	(b) Motor amps _____	
	(c) Charger amps _____	
	(2) Verification of proper standby mode for the system, including monitoring circuits.	
_____	Battery-to-motor disconnect switch opened by _____	
_____	S-2 – DC-1 alarm occurs.	
_____	AC power, DC-1 annunciator clear.	
_____	S-1, DC-1 annunciator clear.	
	d. DC Unit No. 2	
	(1) Verification of proper operation (under load) of the charger, batteries, and DC motor and monitoring circuits.	
_____	DC motor turns pump after AC motor stops.	
_____	Hi-lo, curr-volt, DC-2 alarm occurs.	
	(a) Battery amps _____	
	(b) Motor amps _____	
	(c) Charger amps _____	
	(2) Verification of proper standby mode for the system, including monitoring circuits.	
_____	Battery-to-motor disconnect switch opened by _____	
_____	S-2 – DC-2 alarm occurs.	
_____	AC power, DC-2 annunciator clear.	
_____	S-1, DC-2 annunciator clear.	
	e. DC Unit No. 3	
	(1) Verification of proper operation (under load) of the charger, batteries, and DC motor and monitoring circuits.	
_____	DC motor turns pump after AC motor stops.	
_____	Hi-lo, curr-volt, DC-3 alarm occurs.	

UCN-5123
(3 1-79)

Example 8.17.

ORR SHUTDOWN CHECK LIST

INITIAL

e. (1) *Continued from page 1.*

(a) Battery amps _____

(b) Motor amps _____

(c) Charger amps _____

(2) Verification of proper standby mode for the system, including monitoring circuits.

_____ Battery-to-motor disconnect switch opened by _____

_____ S-2 – DC-3 alarm occurs.

_____ AC power, DC-3 annunciator clear.

_____ S-1, DC-3 annunciator clear.

_____ 7. Reactor secondary loop.

_____ a. Fans in "off."

_____ b. Pumps in "off."

_____ c. Blow-down valves closed.

_____ d. Acid addition system "off."

_____ 8. Pool secondary loop.

_____ a. Fan in "off."

_____ b. Pump in "off."

_____ c. Blow-down valve closed.

_____ d. Acid addition in "off."

_____ 9. Main pumps "off."

_____ 10. Shutdown pump "on."

_____ 11. Main pump test blocks removed.

_____ 12. Channel No. 1 / Channel No. 2 } Log-N instrumentation shows normal decrease in neutron level. Place both Log-N channels in low calibrate.

_____ 13. No. 1 fission chamber inserted to give 20 cps.
No. 2 fission chamber inserted to give 20 cps.

_____ 14. CRM speaker at poolside activated.

UCN-5123
(3 1-79)

Example 8.17. (Continued)

BEAM-HOLE-STATUS
ORR

Date	Shift	HB-1*		HB-2*		HB-3*		HB-4*		HB-5*		HB-6*		HN-1*	HN-4*
		Plug	Liner	Plug	Liner	Plug	Liner	Plug	Liner	Plug	Liner	Plug	Liner		

*Indicate status.

Example 8.18.

BEAM HOLE LINER N_2 PURGE SYSTEM

Date	Time	HB-1	HB-2	HB-3	HB-4	HB-5	HB-6	Cylinder Pressure	Initials	Remarks

UCN-14767
(3 7-82)

Example 8.19.

ORR REPLACEMENT LOADING

PURPOSE: ☐ SCHEDULED RELOADING ☐ UNSCHEDULED RELOADING	ENDING CYCLE / BEGINNING CYCLE	PREPARED BY	CHECKED BY

DATE:	ELEMENTS REMOVED		CHANGE IN WEIGHT U^{235}	ELEMENTS INSERTED		
CORE POSITION	OR NUMBER	WEIGHT U^{235}		OR NUMBER	WEIGHT U^{235}	LOCATION
NEW ELEMENTS	SUBTOTAL					
	SHIM RODS					
	OTHER UNITS					
	TOTAL					

UCN-2274
(3 2-67)

Example 8.20.

7. Experiment Safety Check Sheet (Example 4.2)

   The experiment safety check sheet is filled out by the experimenter and checked by the Reactor Supervisor. This check must be made after the insertion of an experiment into the reactor and before the reactor is started.

8. Weekly Checks (Example 8.21)

   These checks are performed each Friday on the 4 to 12 shift.

9. Weekly Supply Inventory (Example 8.22)

   These checks are performed each Friday on the 8 to 4 shift.

10. ORR-BSR Complex Electrical Usage (Example 8.23)

    These checks are performed each Friday on the 8 to 4 shift.

11. Facility Radiation and Contamination System Check Sheet (Weekly) (Example 8.24)

    These checks are performed each Sunday on the 12 to 8 shift.

12. ORR Embedded Aluminum Vacuum Line Readings (Example 8.25)

    These readings are taken each day on the 8 to 4 shift.

13. Data Sheet for Water Make-up to Pool Reservoir Tank (Example 8.25)

    These readings are taken each day on the 8 to 4 shift.

ORR WEEKLY CHECKS

DATE	SHIFT

CHECK IF "OK"		
_____	1.	Underwater light check
_____	2.	Secondary system supplies inventory
	3.	"Teletalk" system check
_____	A.	Room 307
_____	B.	Room 305
_____	C.	Room 303
_____	D.	North side of pool
_____	E.	South side of pool
_____	F.	Room 202
_____	G.	Room 206A
_____	H.	Room 206B
_____	I.	Second floor, west
_____	J.	First floor, north
_____	K.	First floor, south
_____	L.	Subpile room
_____	M.	Outside subpile room door
_____	N.	Scintillation counter area
_____	O.	Pipe tunnel
_____	P.	Reactor pump house
_____	Q.	Pool tower
_____	R.	Reactor secondary pump house and tower top
_____	S.	BSR control room and annex
_____	T.	POG filter pit
_____	U.	Cell ventilation blower area
_____	4.	Run emergency gasoline pump one hour
_____	5.	Check the area for unsecured gas cylinders
_____	6.	Clean the two reactor models

Clear contact must be established between the control and the point in question. The ability of the control room to contact each area should be tested as well as the reverse condition.

_____
SHIFT ENGINEER

UCN-4848
(3 8-75)

Example 8.21.

WEEKLY SUPPLY INVENTORY

SHIFT		QUANTITY ON HAND
REACTOR SECONDARY	ENDCOR 4630	
	Micro - 6254	
	Sulfuric Acid	
	Buffer Solution	
	Sodium Hypochlorite	
POOL SECONDARY	ENDCOR 4630	
	Micro - 6254	
	Sulfuric Acid	
	Sodium Hypochlorite	
BSR SECONDARY	Sulfuric Acid	
	Buffer Solution	
BUILDING 3004	Nitric Acid	
	Caustic	
	Buffer Solution	
ORR CONTROL ROOM ANNEX	Buffer Solution	
ORR SHIFT ENGINEERS' OFFICE	Sodium Thiosulfate	
	Interference Suppressor	
	Thorium Nitrate	
	Xylenol Indicator	

UCN-14764
(3 7-82)

Example 8.22.

ORR-BSR COMPLEX ELECTRICAL USAGE

Meter Location	Reading This Week	–	Reading Last Week	=	Difference	x	Factor	=	MWh
Bldg. 3085		–		=		x	1.2	=	
Bldg. 3103		–		=		x	1.2	=	
Bldg. 3042		–		=		x	0.64	=	
West of Trane Cooler		–		=		x	0.001	=	
Bldg. 3119		–		=		x	0.96	=	

UCN-14766
(3 7-82)

Example 8.23.

FACILITY RADIATION AND CONTAMINATION SYSTEM
Check Sheet (Weekly)

BUILDING NO.	CHECKED BY	DATE
3042		

CONTAMINATION SYSTEM (FRCAS)

CONTINOUS AIR MONITOR NO.	LOCATION	SOURCE CHECK		REMARKS
		Caution	High	
1	Basement east			
2	P – tube room			
3	Basement south			
4	2nd level northwest			
5	Basement northwest			
6	1st level south			
7	1st level north			
8	Poolside			
9	Hot cell			

RADIATION SYSTEM (FRCAS)

MONITRON NO.	LOCATION	SOURCE CHECK		REMARKS
		Caution	High	
1	Basement northwest			
2	Basement southeast			
3	1st level N. center			
4	1st level south			
5	1st level east			
6	1st level northeast			
7	Balcony north			
8	Pump house (Cell No. 2)			
9	2nd level west			
10	Balcony southwest			
11	3rd level west			
12	Pool top			
13	Balcony south			
14	Control room			

RADIATION SYSTEM (LOCAL ALARM)

MONITRON NO.	LOCATION	SOURCE CHECK		REMARKS
		Alarm	Siren	
Primary Pump Cell No. 1	Pumphouse			
Primary Pump Cell No. 3	Pumphouse			
Control Room (High Level)	Control Room		DNA	

EVACUATION SYSTEM

HORN NO.	ALARM LIGHTS		TANK PRESSURE (psig)		REMARKS
	Bright	Dim	Low	High	
1					
2					

SHIFT ENGINEER

MANUAL EVACUATION OK ☐

UCN-10103
(3 11-75)

Example 8.24.

ORR IMBEDDED ALUMINUM VACUUM LINE READINGS

DATE	TIME	SHIFT	1st FLOOR NORTH					BASEMENT SOUTHEAST						
			NORTH EXIT WEST	NORTH EXIT UPPER	NORTH EXIT LOWER	NORTH INLET WEST	NORTH INLET EAST	POOL LINER WEST	POOL LINER R & CENT	IN & EX PIPE CHASE	SOUTH INLET EAST	SOUTH INLET WEST	SOUTH EXIT LOWER	SOUTH EXIT UPPER

UCN-5710
(3 4-64)

Example 8.25.

DATA SHEET FOR WATER MAKEUP TO POOL RESERVOIR TANK

On 8 - 4 shift, read integrator, record time and date. Find difference in integrator reading from previous day and multiply by 1.13 to get total make up. Figure elapsed time since previous reading (minutes) and calculate makeup rate.

DATE	TIME	INT.	INT. DIFF.	ELAPSED TIME (min)	TOTAL MAKEUP	MAKEUP RATE (gpm)	OPERATOR INITIAL	SHIFT ENG. INITIAL

UCN-15230 (3 3-84)

Example 8.26.

8.1.4. Information Required in the Log

An important duty of the shift supervisor is to make a written record of the shift activities in the logbook. In order for this report to give a complete account of all activities, a standard format is used and is as follows:

(Day No.)

Date	I - Operations: (Time at Power Only)
Shift	II - Shutdowns:
Day	III - Troubles and Unusual Events Chronologically:
Shift supervisor	IV - Routine Checks:
	V - Maintenance:
	VI - Research:
	VII - Samples:
	VIII - Miscellaneous:

Signed by supervisor _____

NOTE: Downtime is defined as any power level below N_L on the log-N recorder and operating time is defined as any power at N_L or greater on the log-N recorder.

In addition to the above-mentioned items, additional information is recorded in the back of the logbook. This information is obtained during the performance of the normal shift checks and is as follows:

1. pool secondary water condition,
2. air-conditioner tower basin water condition,
3. reactor secondary water condition,
4. sumps Nos. 4, 5, and 6 water counts,
5. reactor demineralizer data,
6. degasifier demineralizer data,

7. pool demineralizer data,
8. dc battery data,
9. power accumulation,
10. cold traps, and
11. make-up water integrator reading.

8.2. Data Summation

8.2.1. ORR Weekly Report Form (Example 8.27)

The ORR weekly report is completed each Monday on the 8 to 4 shift by the shift supervisor. It summarizes and averages the operating data collected during the previous week. Most of the data required are taken from the ORR Daily Summary. Additional general information on troubles experienced, maintenance work performed, and experimental changes is obtained from the supervisor's logbook.

8.2.2. The Quarterly Report

Operations Division publishes a compilation of operating information from each reactor facility each quarter. A typical report from the ORR includes:

1. information on accumulated power,
2. time operating,
3. water analyses,
4. cycles of operation,
5. analyses of scheduled shutdowns,
6. analyses of unscheduled shutdowns,
7. analyses of reactor controls maintenance or changes,
8. experiment facility assignment and usage, and
9. individual reports of studies made by members of the Operations Technical Section.

ORR WEEKLY REPORT

WEEK ENDING		PREPARED BY

OPERATING DATA FOR THE WEEK

Mw HOURS			Mw DAYS	OPERATING TIME FOR THE WEEK	TOTAL DOWNTIME
BEGINNING	END	ΔMwh		%	%
				HOURS	HOURS

DATE	DAY NO.	ACC. ENERGY - - Mwh		HOURS OPERATED	HOURS DOWN	NO. OF SHUTDOWNS	
		INSTRUMENT	HEAT			SCHEDULED	UNSCHEDULED
	TOTAL						

SHUTDOWNS

DATE	DURATION, HOURS		ROD POSITION AT STARTUP		REMARKS
	SCHEDULED	UNSCHEDULED	PREDICTED	ACTUAL	

REDUCTIONS IN REACTOR POWER NOT RESULTING IN DOWNTIME

DATE	TYPE	REMARKS

UCN-2202
(3 9-70)

Example 8.27.

COOLING WATER PARAMETERS (MEASURED AT DEMINERALIZER INLET)

	pH AVERAGE (HIGH, LOW)	RESISTIVITY x 10^{-6} AVERAGE (HIGH, LOW)	AVERAGE GAMMA ACTIVITY (c/min/ml x 10^{-3})	DATE OF LAST FILTER CHANGE	AVERAGE WATER TEMPERATURE (°F)		
					INLET	EXIT	ΔT
REACTOR				E. W.			
POOL							

DATA ON REACTOR AND POOL DEMINERALIZERS

COLUMN	RUN NO.	DATE STARTING / ENDING	TOTAL THROUGH-PUT GAL. IN RUN	AVERAGE c/min/ml x 10^{-3}		INFLUENT AVERAGES		EFFLUENT AVERAGES	
				INLET	EXIT	pH	RESISTIVITY x 10^{-6}	pH	RESISTIVITY x 10^{-6}
N. CATION									
N. ANION									
S. CATION									
S. ANION									
DEGASIFIER CATION									
DEGASIFIER ANION									
POOL CATION									
POOL ANION									
*									
*									

DATA ON SECONDARY SYSTEMS

	PH AVERAGE (HIGH, LOW)	BETA, GAMMA ACTIVITY COUNTS Min/Ml AVERAGE (HIGH, LOW)	CrO_4 PPM AVERAGE (HIGH, LOW)	TOTAL SOLIDS PPM AVERAGE (HIGH, LOW)
REACTOR				
POOL				

** SPACE FOR ADDITIONAL DATA FROM REGENERATIONS DURING THE WEEK.*

PAGE 2

Example 8.27. (Continued)

FACILITY CHANGES *

FACILITY	DATE IN	DATE OUT	NATURE OF EXPERIMENT	SPONSOR

BUILDING 3001 – CANAL DEMINERALIZER

IN SERVICE	RUN NO.	PH		RESISTIVITY		COUNTS/MIN/ML		THROUGHPUT GALLONS
		IN	OUT	IN	OUT	IN	OUT	

BUILDING 3004 – WATER DEMINERALIZERS

DATE	SHIFT	UNIT	GALLONS THROUGH LAST REGENERATION	AVERAGE FOR RUN	
				PH	RESISTANCE

* *IF MORE THAN TEN FACILITY CHANGES HAVE BEEN MADE, TYPE ON PAGE 4.*

PAGE 3

Example 8.27. (Continued)

8.3. Mechanical Maintenance

8.3.1. Maintenance Program

The maintenance program for mechanical equipment is the responsibility of the Reactor Supervisor who may delegate this responsibility to one of the reactor supervisory staff. It is the responsibility of the supervisor to have periodic checks made to ensure that proper routine lubrications, inspections, and services are provided by maintenance personnel and to supervise the collection of records which include maintenance history on components, ORNL spare parts listings, manufacturers' service manuals and specifications, and radiation and contamination history on components. The effectiveness of this program lies in part upon the cooperation of Reactor Operations Section personnel in reporting malfunctions of equipment to their supervisor so that he can relay the information to the maintenance staff.

The records are filed as follows:

1. Routine preventive maintenance checks made by the reactor operators. These checks are performed on a routine schedule, and the forms are kept on file.
2. Plant and Equipment routine lubrication and observations checks. This work is performed by craftsmen under the supervision of a P&E foreman. The schedule of these activities is programmed on IBM cards at the P&E Programmed Maintenance office. Cards which specify the exact service(s) required are received by P&E field personnel with an "Information Only" card received by the facility complex maintenance coordinator. After the work is completed the services performed are indicated on a special card (different from the IBM schedule card) by P&E field personnel, and the cards

are returned to the P&E Programmed Maintenance office. Information relating to services performed is stored on magnetic tape (tape is held at the Computer Technology Center at Oak Ridge Gaseous Diffusion Plant) providing a complete history of service maintenance on all components. Procedures have been established which permit the last ten service calls of the service history on any specified item to be printed out immediately (<1 h required from request to delivery). A complete history is also available, but the time required from request to print-out is much longer. When non-routine servicing of component(s) is required, this will be scheduled by the facility maintenance coordinator. He, with P&E field personnel, will complete the necessary information cards and send them to the P&E Programmed Maintenance office so that this service will become a part of the magnetic tape record.

3. Maintenance records. When maintenance is performed on any component, a written description is prepared and filed. Typical information which should be in this record includes:
   a. the names of the craftsmen who performed the work,
   b. a description of the malfunction,
   c. all parts of the component that were replaced and the condition of the parts removed,
   d. any pertinent radiation and contamination information, and
   e. any changes that were made and the reason for the change.

As a part of the overall maintenance program for the ORR complex, the operator performing the routine daily checks should inspect all components and/or systems. Special emphasis should be placed on detecting a malfunction or an abnormal condition. The severity of the malfunction will be

determined by the shift supervisor. If immediate repair is required to ensure continuity of operation or safety, proper action shall be taken by the shift supervisor.

8.3.2. Hoisting Equipment Inspection

Plant policy requires certain checks on hoisting equipment and accessories such as slings and wire rope. All overhead cranes (Example 8.27) and forklifts (Example 8.27) are to be checked daily or before their use, whichever is the least frequent.

Daily check cards are provided at the equipment site for the appropriate checks to be made on the equipment. The checks should be performed as indicated on the cards and initialed in the space provided. Each operator using the equipment shall ensure that the checks have been made prior to the use of the equipment.

All slings, chokers, and other accessory equipment used for lifting shall be visually checked before each use as indicated on the check-card. Any deviations from the normal operation shall be reported to supervision before proceeding.

All cranes that are not in service, or not used for prolonged periods, will be provided with a "Do Not Operate" tag. Supervision shall be contacted prior to its use to ensure that all appropriate inspections, including Inspection Engineering checks, are up-to-date before placing the crane into service.

HOISTING EQUIPMENT CHECK LIST

BLDG. No._____ Dept._____ Equip._____ Equip. No._____ Supv._____

The equipment operator shall perform the following checks daily or before the use of the equipment whichever is less frequent. *Any* deviations from the normal operation shall be reported to the responsible supervisor before proceeding.

Check the following specific items for correct operation prior to using.

a. Operate trolley mechanism in both directions.
b. Operate bridge mechanism in both directions.
c. Inspect rope for proper reeving in drum.
d. Operate hoisting and lowering mechanism. (Includes auxiliary hoist if attached).
e. Lift load till it clears floor and stop to check the hoist brake.
f. Note: The upper limit switch on the hoisting mechanism is to be checked prior to the limit switch's functional use with a load, or daily, whichever is less frequent. Check upper limit switch by operating hoist at low speed and maximum speed.

Check the following, visually, before each use:

a. Slings or cables for excessive wear, broken wires, unstranding, or severe kinking or twisting.
b. Chains for excessive wear, bent links, scars or cuts, corrosion, or elongation.
c. Hooks for any deformation.

UCN-10843 (3 8-73)

SIGN-OFF

Initial daily sign-off to indicate appropriate checks were made prior to use.

INSPECTION/TESTING OF HOISTING EQUIP.

Area_____ Equip._____ Resp. Supv._____

	July Jan.	Aug. Feb.	Sept. March	Oct. April	Nov. May	Dec. June
1						
2						
3						
4						
5						
6						
7						
8						
9						
10						
11						
12						
13						
14						
15						
16						
17						
18						
19						
20						
21						
22						
23						
24						
25						
26						
27						
28						
29						
30						
31						

Example 8.28.

9. RADIATION AND CONTAMINATION CONTROL

9.1. Facility Radiation and Contamination Alarm System (FRCAS) Building 3042

9.1.1. Introduction

The Oak Ridge Research Reactor Building (3042) is equipped with networks of radiation and air-monitoring instruments connected to a central control room within the building and to the Laboratory Emergency Control Center. Facility Radiation and Contamination Alarm Systems are installed in Building 3042 to determine continuously and automatically the radiation condition of the entire facility and to report this information to a central control panel within the building. Should the radiation level or the air activity in a large portion of the building exceed preset values, an audible alarm in the building will be actuated, warning lights outside the building will flash, the building will be placed in containment, and an alarm signal will be transmitted to the Emergency Control Center, Building 2500. Since it is required that the building be evacuated immediately upon the actuation of the coincidence circuits, this circuit will automatically sound the evacuation horns and place the reactor building in containment. The reactor building is defined (for this system) as Building 3042 excluding: (1) the ORR control room and the offices on the third-level north (this area has a separate heating-cooling-ventilation system and normally has a positive pressure with respect to the remaining building containment mode) and (2) the second and third level change rooms which also have a separate heating-ventilating system and are also not a part of the containment mode.

The control room will be evacuated after an evaluation based on radiation and/or contamination levels indicated by the monitors located in the control room.

9.1.2. Description[1]

1. System

The beta-gamma radiation level is monitored by 16 monitrons located throughout the building and in the reactor cooling-water pump house (Table 9.1). Air is monitored for beta-gamma emitting particles by nine continuous air monitors located throughout the building.

Since none of the Health Physics functions originally designed into these monitrons and monitors were altered, each instrument is an independent unit that retains all of its local alarm features. Each instrument, however, is connected to an individual indicator module in the reactor control room. By means of three colored lamps, normally lit, a module indicates the condition of the instrument to which it is connected; that is, a white lamp burns at full intensity if the instrument becomes inoperative, a yellow lamp burns at full intensity if the "caution alarm level" (7.5 mr/h for a monitron and 1000 counts/min for continuous air monitor type Q-2212) is reached (Table 9.2). A change in the intensity of any lamp, that is, from dim to bright, is announced by a buzzer.

The high-level alarm output on each of six selected monitron indicator modules (see Table 9.1) is connected to an evacuation module; six selected air-monitor indicator modules are connected to evacuation modules in a similar manner. If an evacuation module receives a high-level alarm signal from any two or more monitrons or two or more air monitors, the building evacuation system is automatically activated, and the building will be placed in containment.

---

[1]J. A. Russell, Jr., Description of Facility Radiation and Containment System Installed in Oak Ridge Research Reactor, Building 3042, ORNL-TM-943 (September 15, 1964).

Table 9.1. Radiation and contamination monitors installed in Building 3042

Location	Monitor[a] Number
Facility Radiation Monitrons in the Automatic Evacuation System[b]	
Southeast Basement	2
First Level, North Central	3
First Level, South Central	5
Third Level, West	12
Southwest Balcony	11
Control Room	15
Radiation Monitrons with Control Room Alarm Only[b]	
Northwest Basement	1
First Level, East	6
First Level, Northeast	7
Balcony, North	8
Pump House (No. 2 primary pump cell)	9
Second Level, West	10
Top of pool[c]	13
Balcony, South	14
Radiation Monitrons with Local Alarm Only	
Pump House (No. 1 primary pump cell)	
Pump House (No. 3 primary pump cell)	
Room (high radiation level)[d]	

Table 9.1. (continued)

Location	Monitor[a] Number
Facility Contamination Monitors in the Automatic Evacuation System[e]	
Basement, East	1
Second Level, Northwest	4
Basement, Northwest	5
First Level, South	6
First Level, Northwest	7
Poolside	8
Contamination Monitors with Control Room Alarm Only[e]	
Pneumatic-Tube Area	2
Basement, South	3
Hot Cell	9

[a]The monitor number is indicative of the position that the particular unit occupies in the central panel, reading from left to right.

[b]All monitrons are ORNL Model Q-1154B-13.

[c]This is equipped with special ranges of 25 and 125 mr/h.

[d]This is equipped with a special range of 10^{-1} to 10^{4} r/h (local alarm at 5 r/h).

[e]All air monitors are ORNL Model Q-2240B-4 or Q-1740 modified.

Table 9.2. Central control panel alarm indications

Instrument Indication	Lamp intensities		
	Red	Yellow	White
Normal	Dim	Dim	Dim
Caution Level[a]	Dim	Bright	Dim
High Level[b]	Bright	Bright	Dim
Instrument trouble or out of service	Dim	Dim	Bright
Instrument removed[c]	Bright	Bright	Bright

[a]The caution level for an air monitor is 1000 counts/min for Q-2240B-4 and 7000 counts/min for Q1740, and for a monitron it is 7.5 mr/h.

[b]The high level for an air monitor Q-2240B is 4000 counts/min and 100,000 counts/min for an air monitor Q-1740, and for a monitron it is 23 mr/h.

[c]Lamp intensities exist until a maintenance connection is made giving "out-of-service" indication.

The reactor primary pump house monitron connected to the FRCAS has its sensor element in the No. 2 primary pump cell. Two additional monitrons with a siren mounted on the monitron cover plate are located in the Nos. 1 and 3 primary pump cells, respectively. These monitrons will give a local alarm only. The general background is approximately 10 mr/h. The monitron setpoint for the siren alarm is 20 mr/h, i.e., the setpoint should be no greater than two times the normal background. Signs ("At the Sound of the Siren, Evacuate Area") are located at the reactor primary pump house and the reactor primary heat-exchanger pit. Should a radiation problem exist, the monitrons along with verbal announcement over the ORR PA system, should alert perssonnel in the area of the abnormal radiation condition. The monitron in pump cells Nos. 1 and 3 will be checked with a source on the 12 to 8 shift, along with the routine FRCAS monitron and CAM checks on each Sunday (Example 8.24).

2. Components

a. Panel

The central panel for the entire system, located in the reactor control room, consists of 48 racks which contain one indicating module for each instrument, a coincidence module for the radiation alarm system, a coincidence module for the contamination alarm system, a buzzer, and a manual evacuation module. A metalphoto test strip is provided at the top of each rack for instrument identification. Those in the evacuation system are underlined for further identification (as shown in Fig. 9.1).

Photo 7818-83

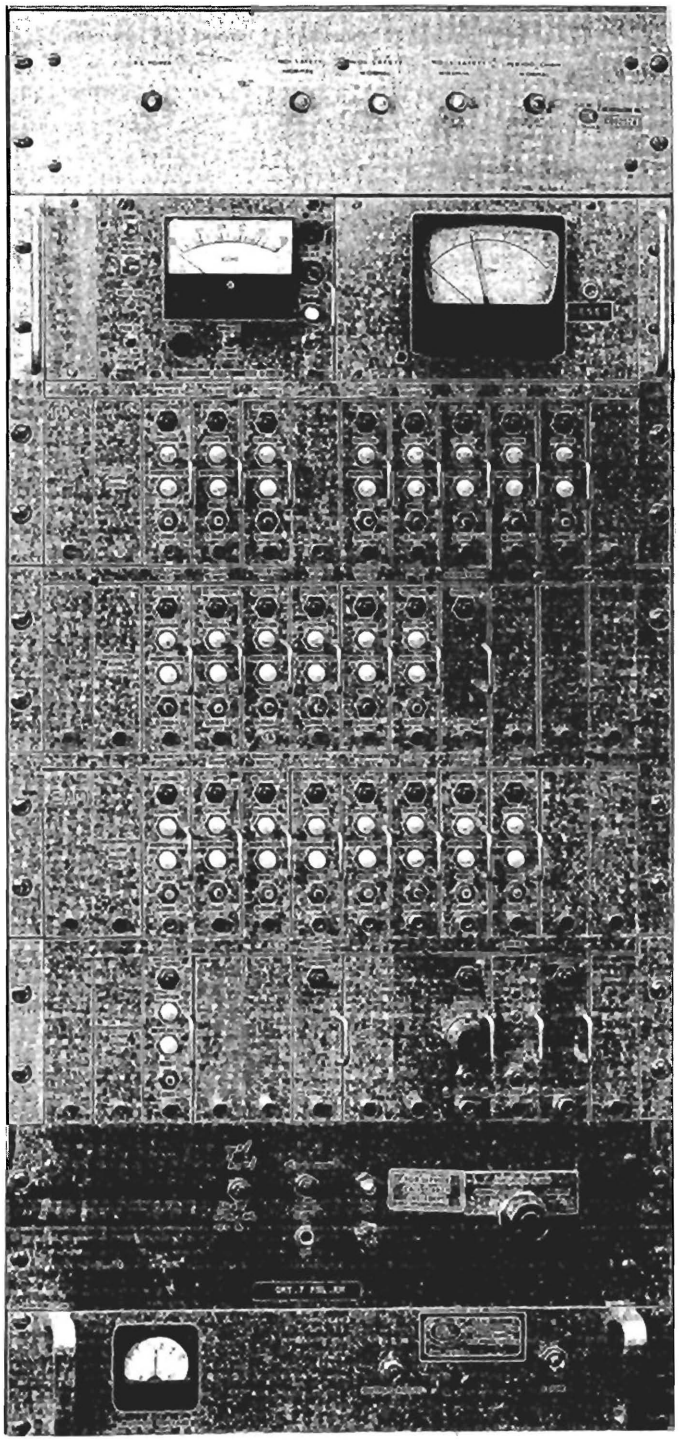

Fig. 9.1. Central panel of the ORR facility radiation and contamination alarm system.

b. Monitron

The remote monitron (ORNL Model Q-1154B) is an ac-powered, null-type radiation detection instrument for monitoring gamma radiation.

The instrument and alarms operate as follows:

(1) A power failure or a disconnected power cord will cause the white lamp on the central control panel to burn brightly. After power is restored and a 1-min delay, the white lamp will automatically reset. During this 1-min delay, caution and high-level alarms at the instrument might sound, but the same alarms on the central panel are automatically locked out and will not sound.

(2) At the caution radiation level of 7.5 mr/h, an electronic alarm circuit will cause the yellow lamp on the central panel in the ORR control room to burn brightly, the buzzer at the control panel to sound, and the bell at the instrument to ring. The instrument is automatically reset when the radiation level decreases below 7.5 mr/h.

(3) At 23 mr/h, the bell at the instrument will be ringing, since it started at 7.5 mr/h, and the red lamp on the central panel in the ORR control room will burn brightly. When the radiation level decreases to less than 23 mr/h, the instrument is automatically reset by an interrupter (allows a reset every 30 s) at the central panel.

(4) On dual-range instruments, the white light on the central panel burns brightly to indicate that the instrument is set on the highest range or is inoperative. The monitron for the top of the pool is of this type.

As mentioned earlier, any change in the intensity of any lamp from dim to bright is announced by a buzzer at the central panel.

c. Air monitors

Two types of air monitors are installed: an older model, the Mobile Air Monitor (ORNL Model Q-1740) and its successor, the Beta-Gamma Constant Air Monitor (ORNL Model Q-2240).

(1) Mobile air monitor. This monitor is equipped with a logarithmic count-rate meter, which does not require range changing. Any background radiation level within the range of the instrument can be suppressed, and from one to five decades may be selected for display on a strip-chart recorder. This scale arrangement allows the instrument to accumulate air-contamination data while operating in areas where the background count is high.

The local alarm circuit is so arranged that on instrument failure or very high radiation conditions an alarm bell and a red annunciator light are actuated simultaneously. If the air contamination increases to a point above the setpoint, a flashing white local annunciator light, indicating tolerance level, is actuated. The local annunciator lights are mounted on top of the instrument cabinet so that operation of the monitor can be observed from any position in the immediate area.

(2) Beta-Gamma Constant Air Monitor. This monitor consists of an aspirating system, a paper-tape filter, a halogen-type Geiger-Mueller tube detector, a linear count-rate meter, a recorder, and visible and audible alarms. The air flow through the filter is controlled at 3 cfm. Assuming airborne activity, a sample of beta-gamma emitting particles is collected on the paper-tape filter (collected-sample size of 1 x 2 1/2 in.). The collection time per sample may be one day or one week, depending on the timer installed, or the tape may be advanced manually at any time by the operator. The detector counts the sample as it is being collected.

The instrument has an alarm panel with four lights, a bell, and a buzzer. When the caution setpoint is reached, an amber light comes on and the buzzer is energized. There is no switch to silence the buzzer; therefore, the tape must be advanced to clear the alarm. When the high-level trip point is reached, a red light comes on and the bell rings. The bell can be silenced by a toggle switch; and, when this is done, an amber neon indicator comes on.

Filter-tape breakage is also indicated. When a tape breaks, a red neon indicator is energized, and the caution circuit to the central panel in the ORR control room is energized through a flasher. The amber neon bulb burns continuously, and the caution light and the buzzer come on intermittently. If a tape breaks and at the same time the caution alarm sounds, the tape-break neon light, the caution light, and the buzzer will be on continuously. A test push button permits checking the alarm panel by simultaneously simulating tape breakage and high-level alarm signals.

In addition to these standard features, both models of air monitors at Building 3042 have an accessory chassis containing a meter-relay.

The instrument and alarms operate as follows:

(a) An accessory meter-relay will cause the white light on the central panel to burn brightly, indicating an inoperative alarm, when power fails or the power cord is disconnected. After the power is restored and a 60- to 90-s delay, the white light will automatically reset. During the 60- to 90-s delay, local caution and high-level alarms do not sound since they are locked out.

(b) At the caution level of 1000 counts/min, an electronic alarm circuit will cause the yellow lamp in the control room to burn brightly. With a Model Q-2240 Air Monitor, a buzzer will sound at the instrument; with a Model Q-1740 Air Monitor, a bell will ring intermittently at the instrument. Both models are reset automatically when the filter is changed.

(c) At the high level of 4000 counts/min, the panel meter relay on the instrument causes the red lamp in the control room to burn brightly. The buzzer on the Model Q-2240 instrument sounds. The bell on the Model Q-1740 instrument changes from an intermittent to a steady ringing. These alarms can be reset by advancing or changing the filter and by pressing the manual reset button on the monitor.

d. Indicator (located in the central panel - ORR Control Room)

When the instrument connected to an indicator is operating normally, all lamps on that module are dim (Table 9.2). When the module receives a signal that the instrument is operating abnormally or that the caution level or the high-level alarm values have been exceeded, the lamps burn at full intensity: white for inoperative instrument, yellow for caution level, and red for high level. A signal is also generated which causes a buzzer to sound. These lamp indications will remain until they are manually reset by means of the push button at the botton of the indicator module that receives the signal. If the indicator is reset when the alarm or abnormal condition has not been fixed, the lamps will momentarily become dim when the reset button is depressed and then will become bright and the buzzer will sound again when the reset button is released.

All indicator modules are identical and can be interchanged or replaced without alteration.

e. Coincidence module (located in the central panel - ORR Control Room)

Six monitrons are connected to a coincidence module and six continuous air monitors are connected to another coincidence module. When two or more monitron indicator modules or two or more air-monitor indicator modules receive high-level alarm signals, the associated coincidence module will actuate the building warning and evacuation equipment and will transmit a signal to the Emergency Control Center,

Building 2500. In addition, the building will be placed in containment. A red lamp on the affected coincidence module will indicate which set of instruments has detected an abnormal condition.

When the indicator modules showing an abnormal condition are reset manually, which can be performed only after the abnormal condition has cleared, the coincidence module will also be reset.

f. Buzzer unit (located in the control panel - ORR Control Room)

The buzzer gives audible notice that an indicator module has received one of three input signals. The buzzer, which serves all indicator modules, is reset by a push button at the front of the module.

After being reset, the buzzer will again sound whenever there is a change in input signals received by the indicator modules. For example, a change from a normal condition to a "caution alarm level" at some location will start the buzzer. After it is reset, a change to "high alarm level" or to "inoperative" instrument will start the buzzer again.

g. Air horns, beacon lights, and control switches

(1) Air horns. When a coincidence module has been energized by two or more monitrons or air monitors, two air horns are activated by nitrogen gas bottles (one for each horn) to notify the building occupants to leave the building. These horns are located as follows: (a) third level - on the west wall in the southwest corner about 10 ft above the third floor and (b) basement level - on column E-5 (northeast corner of building) about 10 ft above the basement floor. The air horn, a "Clarion whistle," will sound about 4 min on one filled gas bottle. A control box for each horn contains a pressure-reducing valve, pressure switches that monitor tank and regulated pressures, and a solenoid valve that is opened by an electrical signal from the coincidence module. A momentary signal will open the solenoid valve, and the valve will remain open until it is closed manually by pressing the mushroom head of the valve stem inward or by depressing the silencing button.

The gas supply to power each horn is furnished by bottled nitrogen gas. Each station has a two-bottle source supplying gas pressure to a manifold. Normally, only one bottle of each station will be "on-line" with a second bottle on "standby" for emergency use and they will be identified accordingly.

The normal gas pressures for proper operation of the horns are not less than 1000 psig tank pressure and 80 to 120 psig line pressure to the solenoid valve. Abnormal pressures are indicated by red lamps (labeled "horn trouble") on the central control panel, one lamp for each horn. The dim lamp indicates normal pressures, and a bright lamp indicates abnormal pressures. Inspection of the gauges will indicate whether the tank pressure or the line pressure is abnormal.

(2) Beacon lights. Four beacons with magenta-colored lenses are installed on the corners of the building to warn personnel outside the building of the evacuation. These beacons are actuated by a signal from a coincidence module or from any one of three manual buttons, and they are automatically stopped when the coincidence module has returned to a normal condition or the manual reset button has been reset.

(3) Control switches. A key-operated switch, labeled "normal-disable," on the central control panel may be used to disconnect the air horns, beacons, and containment from the coincidence circuit during the maintenance or abnormal operation periods. Since the Laboratory Emergency Control Center receives an alarm signal when the switch is moved to the "disable" position, the Laboratory Emergency Control Center should be notified before the switch is set at this position.

A push button on the central control panel labeled "manual evacuate" actuates the beacons, the horns and building containment, and transmits an alarm signal to the Laboratory Emergency Control Center (if the Center has not already received an alarm), regardless of the position of the "normal-disable" switch.

h. Power supplies

The main power for the system is 120 V, 60 cycle, and is supplied from the emergency power bus in Building 3042.

The 24-V dc transistorized power supply is a regulated voltage and current unit. A green "power on" lamp on the control chassis and a neon lamp on the power supply panel (both located on the central panel) will be brightly lighted to indicate that the power supplies are operating. The two dial settings for the voltage and current adjustments are 8 and 5, respectively.

9.1.3. Operational Procedures

1. Acknowledgement of alarms

a. In the event of a high-level, caution, or inoperative alarm, the control room operator should call this to the immediate attention of the shift supervisor.

b. The control room operator should make a notation of the time the alarm was initiated, the module identification, and then reset the button on the buzzer. This permits the audible alarm to be sounded again if another alarm is activated before the first alarm can be cleared.

c. Check the conditions at the instrument and reset the instrument if required (air monitor filter change or air monitor high-level alarm). Verify the radiation level with a portable survey meter when applicable and initial the tape on the air monitors before advancing it (in the event an analysis of the collected radioactive nuclides is to be made). The air-monitor "caution" and "instrument inoperative" alarms and all monitron alarms are self-resetting when the radiation level or trouble causing the alarm is removed.

d. After the cause of the alarm has been determined and the appropriate action taken, the supervisor should be responsible for recording the pertinent information in the logbook.

e. Reset the module on the central alarm panel by pressing the button at the bottom of the module.

f. If two or more monitrons or two or more air monitors connected to the automatic evacuation system signal high-level conditions, the local evacuation horn will sound, the building will be placed in containment (excludes the control room), the beacons will be energized, and an audible and visual alarm signal will be transmitted to the Emergency Control Center, Building 2500. When an alarm occurs, all personnel should immediately evacuate the building except for those needed in the control room. Personnel in the control room will be guided in their actions by an evaluation of conditions based on readings from the control room radiation and air contamination instruments, reactor and pool water activity mesurements, and other considerations as described in Section 7.7.10, "Building Evacuation - Emergency in Building 3042."

g. In the event one of the units is scheduled for maintenance, or for any reason is unreliable, the supervisor in charge should be notified. He should ensure that, until the unit is again reliable, adequate monitoring of the particular area in question is made. If the signal cable is disconnected, all three lights will indicate an alarm condition. In this case a "jumper" should be installed by personnel from the instrument group to prevent possible unnecessary evacuation in the event a second high-level

alarm is initiated from an instrument in the same coincidence circuit. Following the installation of the jumper, the area should be monitored since no signal can be initiated from this unit. If the power cord only is unplugged, only an "inoperative" alarm is initiated. However, the high-level alarms from this source will be of no value in initiating an evacuation. Consequently, in both cases, the area should be monitored.

2. The key-operated "Normal-Disable" switch

This switch is located on the central alarm panel and may be used to prevent the system from causing unnecesary evacuation of the building or from sending false signals to the Emergency Control Center during maintenance or abnormal operating conditions. The key for this switch will be locked in the E-panel key box, and the approval of the Reactor Supervisor must be obtained before the aspect of the switch is changed. If the key is to remain in the switch for a prolonged period of time, the supervisor should place a "Do Not Operate" tag on the switch. The status of the system should be given. Since an alarm indication will show at the Emergency Control Center when the key-operated switch is in the "disable" position, the supervisor should notify the Emergency Control Center (Building 2500) before the switch is operated.

3. The manual evacuation button

A manual evacuation button is provided at the following locations: on the central panel in the control room, on the ORR console, and in the emergency microphone box located just outside the northwest personnel door. Each will initiate the same warning signals to personnel and Building 2500 as the automatic signals from two radiation monitors or contamination monitors.

This button may be used when an adverse condition has developed (or is expected to develop) which is considered to be deleterious to the safety of personnel in the building. Possible conditions for use of this button may be: emergency instructions to evacuate are received over the plant-wide public-address system; all air monitors are indicating a rapid increase in the building air-activity; and a monitron in the automatic evacuation system has been removed for maintenance and an operator stationed in the particular area reports a high-radiation field at the same time a second monitron initiates a high-level alarm. Reiterating, if the key-operated switch is in the "disable" position and if two monitors indicate high-level radiation, the evacuation horns will not sound and the building containment will be bypassed. Although the time that the automatic evacuation system is disabled will always be minimized, it is during this time that one should be ready to use the manual evacuation button if necessary.

Normally, the decision to use the manual button will be that of the shift supervisor or Reactor Supervisor. However, there may be circumstances where the console operator has received information of an impending emergency and will not have time for consultation with supervision. If time permits, he should announce the situation and then initiate the evacuation.

NOTE: On the module for the manual evacuation button, there is also a reset button. Press this when the system is to be returned to the normal standby condition.

4. Loss of power

Electrical power for the system (including the horn solenoid valves), is provided from the emergency bus which is fed by both TVA and the emergency diesel generator. If all electrical services have failed (noted by a loss of power to all the lamps on the control panel), the evacuation signal may be initiated by manually moving the plunger of the solenoid valves in the outward direction. These are located inside the metal boxes housing the pressure indicating gauges of the nitrogen cylinders. All personnel should familiarize themselves with the location of these plungers (see "Checks"). It should also be noted that a malfunctioning fuse (located at the face of the central panel) will result in a loss of power to the green light. The fuse (5 A) should be replaced as soon as possible.

If TVA power fails, all the "inoperative," white lights will brighten and the buzzer module should be reset.

5. Momentary evacuation signals

If the evacuation signal is actuated and the condition causing the action clears, the two horns will continue to sound until the nitrogen supply is exhausted. To silence the two horns, the plungers must be manually repositioned.

6. Temporary silencing of evacuation horn

To interrupt the sounding of the evacuation horn and permit communication from the local emergency director to the building occupants via the public-address system, a spring-return (button switch) is provided in two locations: (a) on the west panel of the ORR console and (b) inside the "emergency microphone" box located on the exterior west personnel door. When the button is held in the depressed position, the horn will be silenced; when it is released, the horn will again sound.

7. Daily checks

The 12 to 8 shift will include in their routine checks, a check of the indicated gas pressure of the nitrogen cylinders which operate the evacuation horns. Two cylinders are located at the third-level entrance to the elevator. Two cylinders are also located at column E-5 in the northeast section of the basement. The normal gas pressures for proper operation of the horns are not less than 1000 psig tank pressure and 80 to 120 psig line pressure to the solenoid valve. The gauges are mounted in a metal box close to each of the two nitrogen cylinders. The console operator should also make a routine surveillance of the following:

a. the two red lights on the lower section of the control room panel - a dim lamp indicates normal nitrogen cylinder pressure and a bright lamp indicates abnormal pressure; and

b. the green "power on" light and the neon light below it should be observed to make sure the power supplies are functioning.

All three shifts will check the monitrons and air monitors for any obvious malfunction (air flow, no chart paper, indicator off zero, drifts upward in readouts of the air monitors, etc.).

8. Weekly checks

Each monitoring unit (and channel) will be checked for operability using a radioactive source. The intensity of the radiation at two distances from the source should be verified, on occasion, with a portable monitor (one should be approximately 7.5 mr/h and one 23 mr/h). For example, if the source must be placed "too close" to an ionization chamber before an alarm is initiated, this will constitute a malfunction and should be reported to the shift supervisor in charge.

Operations personnel will perform these checks (preferably on Sunday, 12 to 8 shift) using an operator with a source to actuate the alarms. A second operator in the control room will announce over the public-address system which level alarm was received for each module.

If personnel of the Radiation and Monitoring Systems Development Group perform these checks or any other checks related to the operability of this system, the shift supervisor is still responsible for the completion of the checks and should be aware of the status of the system at all times.

9. Bimonthly checks

A complete check of all instruments and the coincidence modules will be made during the checks. The requirements of these checks are more extensive and the shift supervisor will be responsible for correlation of the checkout of the system. Services for the checks are obtained from the Radiation and Monitoring Systems Development Group. On alternate bimonthly checks, the nitrogen cylinder will be valved out of service and the air horns will be sounded on a short blast from the trapped nitrogen pressure in the horn piping.

10. Responsibilities for and during maintenance

The shift supervisor should be responsible for reporting all abnormalities associated with this monitoring system.* In addition, each shift supervisor should be aware of the status of the system during his shift and see to it that all maintenance work is expedited to minimize "out-of-service" time.

---

*All malfunctions will be reported to the Radiation and Monitoring Systems Development Group preferably by the shift supervisor logging the pertinent information.

9.2. Establishing a Contamination Zone and Handling Contaminated Supplies

9.2.1. Introduction

Since the ORR is routinely frequented by numerous non-Operations and non-ORNL visitors, Reactor Operations personnel have an added responsibility to guarantee that the ORR area, especially the pool area, does not present any radiation or contamination hazards to those individuals unfamiliar with such hazards.

To aid in maintaining a safe working environment for all personnel, it is most important for Reactor Operations personnel to be familiar with and practice the rules and policies set forth in the Safety Manual, the Health Physics Procedure Manual, the Radiation Safety and Control Training Manual, and the Operating Manual for the Oak Ridge Research Reactor. In addition, it is equally important that an efficient method of establishing C-zones and handling C-zone protective clothing be practiced.

9.2.2. Precautions

1. Ensure that there is no confusion to the user between "used" and "unused" C-zone protective clothing at the entrance to the C-zone.
2. Ensure that there is a categorical separation of C-zone clothing as listed below:
   a. coveralls, lab coats, and caps;
   b. shoe covers;
   c. neoprene gloves; and
   d. all-rubber gloves.

   It is most important that these categories be distinguishable at the entrance to a C-zone (unused supplies) and at the exit from a C-zone (used supplies).

3. Ensure that a yellow-painted "hot" can is located at the exit from a C-zone.
4. Ensure that all contaminated clothing is placed in a cloth laundry bag labeled "ORR"; the categorical separation must remain in effect to facilitate laundering. The four red plastic bags, into which the used C-zone clothing will be placed, may all be placed in the same cloth laundry bag.
5. Ensure that highly contaminated items (i.e., a pair of gloves that may present a radiation hazard) are disposed of in the yellow-painted "hot" can rather than one of the glove bags.
6. Ensure that radiation-monitoring equipment is available at the exit from each C-zone.
7. Ensure that a properly signed Radiation Work Permit is posted at the entrance to each C-zone.

9.2.3. Procedure

1. For establishing a C-zone
   a. Using masking tape, secure blotting paper on the floor area of the proposed C-zone.
   b. Post contamination-zone and/or radiation-zone signs, as applicable.
   c. Post a properly signed radiation work permit at the entrance to the regulated zone.
   d. Place four properly labeled "mail-bag" holders at the entrance to the C-zone; secure a red plastic bag to each. (Signs for each of the four categories listed under 9.3.2.2 must be secured to each holder.)
   e. Place the necessary clean supplies in each of the bags mentioned in the previous step.

f. Place four properly labeled "mail bag" holders at the exit from the C-zone; secure a red plastic bag to each.

g. Place a yellow-painted "hot" can near the exit from the C-zone.

2. For handling used C-zone clothing

a. Tape the end of each of the four red plastic bags containing the used C-zone clothing and transfer them to the 3rd level change room.

b. Place the filled red plastic bags in the large cloth laundry bag marked "ORR." (Since the contents are already separated, as required to facilitate laundering, more than one plastic bag may be placed in a cloth bag.)

10. SAFETY

10.1. Introduction

The ORNL "Safety Manual" discusses the safety regulations for much of the routine activities at the reactor facility, particularly sections:

1.4. Chemical Laboratory Safe Practices,

1.5. Electrical Safety Guides,

1.6. Compressed Gas Cylinders and Regulators, and

1.7. Use of Work Permits, Locks, and Tags.

However, it does not include all of the activities that are unique to the facility. So, adherence to the following safety rules and/or procedures, which supplement Laboratory-wide safety regulations, will help to ensure that all operational and maintenance activities are conducted with a minimum risk of personnel injury. Employees who fail to comply with these regulations are subject to disciplinary action.

10.2. Pool Work

10.2.1. Walking along the top of the pool parapet is prohibited. The movable bridge will be used for work requiring movement along the top of the pool.

10.2.2. Routine work which requires one person to be on the pool parapet, e.g., hydraulic-tube operation, manipulating valves for degasifier operation, work on the isotope platform, and operation of the underwater saw, will require that a second person be nearby who can be an observer or a helper on the particular job if the work is not performed behind a guard rail.

10.2.3. Two people must be present when work is performed which requires a person to work over the pool or in the pool basin, for example:

1. transferring fuel or shim rods,
2. transferring experiments from one pool to another,
3. transfers to the hot cell,
4. inserting or removing experiments,
5. isotope work, and
6. entry into the pool basin.

10.3. Pool-Basin Entry

When entry into the pool basin is required, the following safety precautions must be observed:

10.3.1. at least two people must be present, and

10.3.2. an escape ladder must be accessible to all of the people in the pool basin.

10.4. Bosun's Chair

When the use of a bosun's chair suspended from the crane is required, the crane operator will give full and undivided attention to the operation of the crane from the time the person using the bosun's chair enters the chair until he leaves the chair.

10.5. Chemical Hazards

Routine work at the reactor facility requires the use of several hazardous chemicals. The safety precautions listed below should be observed by operating personnel when handling these chemicals.

10.5.1. Two men must be present when filling acid or caustic storage tanks.

10.5.2. A face shield, rubber gloves, and a rubber apron must be worn when transferring acid or caustic and when checking the specific gravity or level of battery acid.

10.5.3. Detailed information of the chemicals used in the secondary water systems is given in Section 5.3.7 of this manual. When handling these chemicals, the proper precautions should be used to avoid coming in contact with them.

10.6. Miscellaneous

10.6.1. The following jobs require the presence of at least two people:

1. filling acid or caustic storage tanks,
2. emptying heavy waste cans or cans that are radioactive,
3. any work performed on the rod-drive platform in the ORR sub-pile room unless the person is in constant telephone contact with another person,
4. entry into the pipe chase, and
5. work in confined, out-of-the-way places such as sumps or tower basins.

10.6.2. Whenever a person works alone in the area after normal working hours, he should notify the shift supervisor when he arrives and when he leaves.

10.7. Safety Showers and Eyewash Basins

Safety showers and eyewash basins are in service at strategic locations within the ORR-BSR complex.

The specific locations of the units are as follows:

10.7.1. ORR (inside)

Building 3042 - basement lab, safety shower

Building 3042 - basement west, eyewash

Building 3042 - 1st floor, north, safety shower

Building 3042 - 1st floor, south, safety shower

Building 3042 - 1st floor, loop No. 2 cell, safety shower

Building 3042 - diesel room, eyewash

10.7.2. OGR (inside)

Building 3001 - 1st floor, southeast, safety shower

Building 3001 - 1st floor, southwest, safety shower

Building 3001 - 1st floor, southeast, eyewash

10.7.3. Demineralized Water

Building 3004 - north, inside, safety shower

Building 3004 - north, outside, safety shower

Building 3004 - north, eyewash

10.7.4. BSR Primary

Building 3117 - BSR tower, south, safety shower

Building 3119 - BSR pump house, safety shower

10.7.5. ORR Primary

Building 3085 - pump cell No. 1, safety shower and eyewash

Building 3085 - pump cell No. 2, safety shower and eyewash

Building 3085 - pump cell No. 3, safety shower and eyewash

Building 3086 - pool tower (inside), safety shower

Building 3103 - reactor tower (outside), safety shower

11. MAINTENANCE MANAGEMENT AT THE ORR COMPLEX

11.1. Introduction

11.1.1. Area and Responsibilities

The ORR complex consists of the following buildings:

3042 - ORR
3085 - Primary Pump House
3086 - Pool Cooling Tower
3087 - Trane Cooler
3089 - Air Conditioning Tower
3102 - Reactor Heat Exchanger Pit
3103 - 30-MW Cooling Tower

Maintenance of the ORR complex is the responsibility of the Reactor Supervisor and his staff in a typical line organization. A block diagram showing the line of responsibility is depicted in Fig. 11.1. He may delegate authority to a supervisor for coordinating the work with the appropriate groups that provide maintenance services. The Plant and Equipment Division is responsible for performing the maintenance work on mechanical and electrical equipment; the Instrumentation and Controls Division is responsible for performing the maintenance work on instrumentation; and the Quality Assurance and Inspection Department is responsible for performing the inspection of welds and critical materials, and for all other nondestructive testing as well as for inspection of filters, pressure vessels, and hoisting and other specialized equipment.

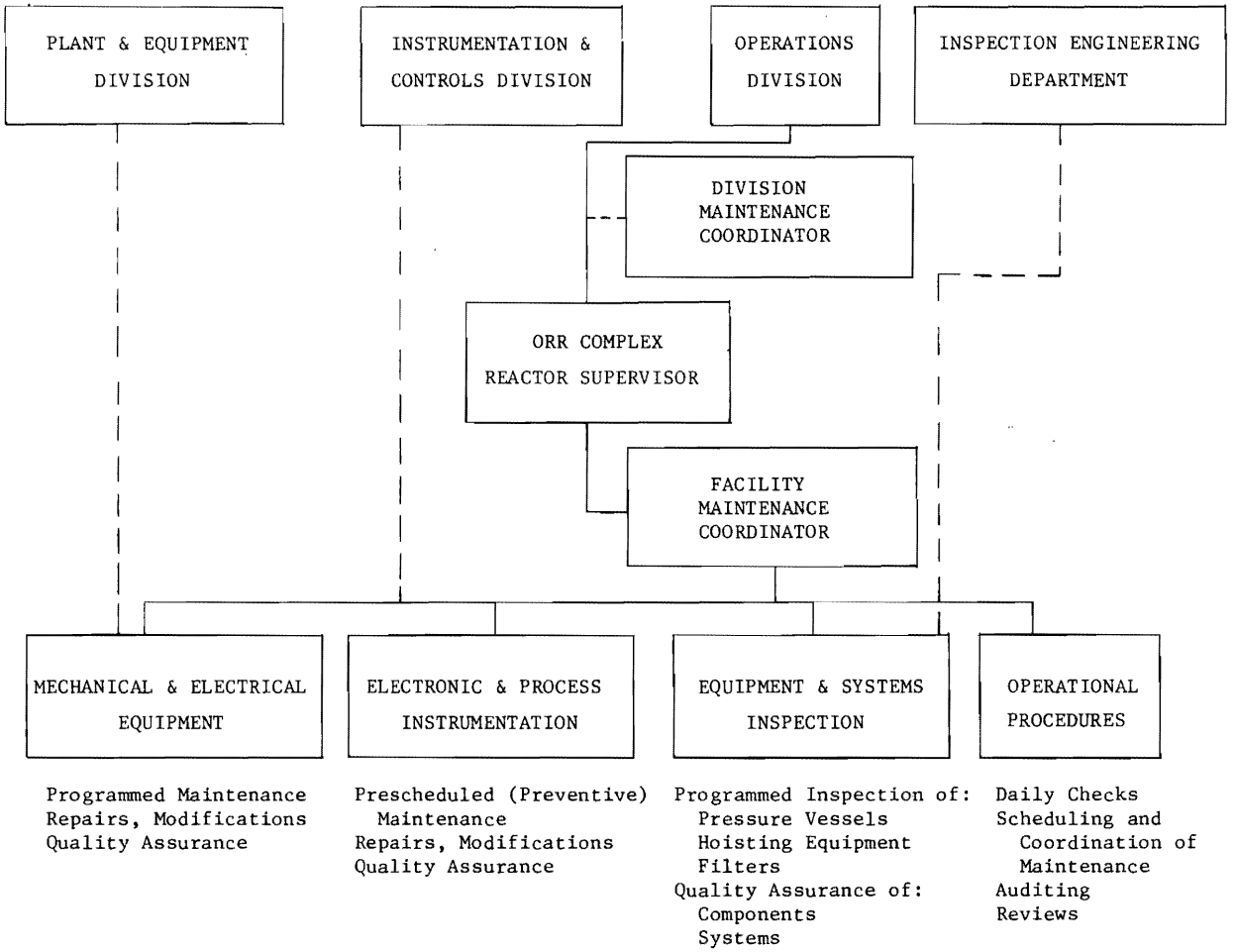

Fig. 11.1. Line of maintenance responsibility.

In addition, the Reactor Supervisor, through his staff, is responsible for:

1. setting up a program of routine maintenance and in-service inspection and scheduling maintenance during shutdowns in coordination with the Plant and Equipment, Instrumentation and Controls, and Quality Assurance and Inspection groups;
2. preparing certain maintenance and inspection procedures which cannot be disassociated from operation, such as that on reactor components which are highly radioactive;
3. auditing the maintenance performed by the above groups during work execution, inspecting completed work, and testing prior to operation (functional tests of the equipment and procedures are also used to detect any deficiencies prior to operations);
4. making regular reviews of operating and maintenance experience records to determine where maintenance procedures need to be written, upgraded, or changed;
5. obtaining engineering assistance as needed for developing designs, specifications, procedures, and inspection requirements for special jobs; and
6. maintaining an adequate inventory of spare parts and making certain that the spare parts meet the applicable specifications if purchased; or, if fabricated, that the applicable specifications for materials and inspection are adhered to.

11.2. Mechanical and Electrical Maintenance

11.2.1. Scheduling

All routine maintenance of this type has been put on a computerized scheduling-and-auditing system called "programmed maintenance" which is in effect throughout the Laboratory and is described in ORNL/TM-2161. The equipment inventory, route layout, analysis of manufacturer's maintenance data, frequency of scheduling, etc., were completed through the combined efforts of members of the Plant and Equipment Division and the Operations Division.

The schedule was selected to be compatible with the operational activities of the facility. Each week, IBM cards covering the routine maintenance to be done the following week are sent to the P&E maintenance supervisor responsible for doing the work; the supervisor assigns the work (gives the cards) to the appropriate mechanics. Identical cards marked "information only" are sent to the facility maintenance coordinator for review; he plans for any necessary equipment shutdowns and decides whether a more detailed inspection and/or repair is needed.

Initially, manufacturers' recommendations are used to determine the frequency of the performance of this maintenance, and adjustments of the frequency are made based upon experience and the accessibility of components. Most routine preventive maintenance can be done while the facilities are in operation; however, some must be scheduled to be done while the systems are shutdown. Since facility shutdowns cannot be predicted accurately over a long period of time, these routine maintenance jobs must have a flexible schedule which can be altered if feasible and prudent to do so. If schedule changes are warranted, such changes are approved by the operating group.

As experience is gained, scheduled maintenance frequency intervals can be decreased or increased as necessary. Periodic reviews of records of routine maintenance, equipment performance, and equipment failures are made by the Reactor Supervisor's staff. With the aid of lubrication experts and Plant and Equipment Division personnel, decisions are made relating to schedule changes.

11.2.2. Procedures

In general, procedures used to maintain equipment purchased from manufacturers outside the Laboratory are patterned after those recommended by the manufacturer of the equipment. Operating and maintenance instruction books are furnished originally by the manufacturers and are supplemented with procedures based on operating history. If any repetitive failure is experienced with the equipment, the manufacturer may be contacted and his advice solicited in an effort to prevent further failures. In some cases, the manufacturer's representative may be brought to the facility as a consultant.

Procedures used to maintain equipment built locally by the Laboratory are available in the office of the facility maintenance coordinator. Procedures covering critical items are included in this ORR Operating Manual, ORNL/TM-506/R1. In the preparation of these procedures, the designer of the equipment is consulted and is asked to approve the completed procedure. In some cases, the designer himself is responsible for writing the procedure. Such a descriptive procedure concerning the control-rod-drive mechanism was prepared by the designer and has been used effectively by maintenance personnel of the Plant and Equipment Division and the Reactor Supervisor and his staff.

In conjunction with these procedures, a checklist is provided which details critical component dimensions and conditions. Tolerances are given as a guide to the mechanic and his supervisor to help them determine whether or not a particular component is acceptable for use.

11.2.3. Documentation

All routine preventive maintenance which is scheduled on IBM cards is documented on the IBM cards themselves. For each maintenance job, an IBM card is sent to the P&E maintenance supervisor, who in turn distributes the card to the appropriate mechanic. When the work is completed, the mechanic initials and dates the card and returns it to his supervisor. If the P&E maintenance supervisor is satisfied that the work has been performed, there is no further inspection of the work. If the craftsman has run into unusual problems or if he has left work undone, the supervisor will check on conditions himself - he may have to reassign the card to another craft or he may initiate a repair order that exceeds the requirements of routine preventive maintenance. The judgment of the craftman is depended upon for most of the routine work and the supervisor spot checks to audit the effectiveness of the service performed. When the work is complete, a card (different from the IBM schedule card) is returned to the P&E programmed maintenance office. The facility maintenance coordinator spot checks a sufficient number of jobs to assure himself that the work is being done as specified.

For non-routine maintenance jobs, records are kept which show the equipment malfunction, inspection report, details of repair, and any unusual problems encountered. In addition, a list of all new parts installed and the condition of the old parts is recorded. The cause of the equipment failure and recommended preventive measures are also recorded on the maintenance record. This maintenance record includes the date of the repairs, the name of the mechanic who performed the work, the signature of the mechanic's supervisor, and the facility maintenance coordinator's signature. Information relating to services performed is stored on magnetic tape (the tape is held at the Computer Technology Center at Oak Ridge Gaseous Diffusion Plant) providing a complete history of

service maintenance on all components. Procedures have been established which permit the last ten service calls of the service history on any specified item to be printed out immediately (<1 h required from request to delivery). A complete history is also available, but the time required from request to print-out is much longer.

11.2.4. Control

The design and fabrication of new or replacement components and the maintenance of existing equipment is accomplished under the ORNL Quality Assurance Program. During the design of the ORR facility, the architect engineer issued a complete set of specifications for each system. These specifications cover the types of materials that may be used, the certifications required for the materials, the welding techniques, and the welding inspections required.

Engineering assistance is obtained from the General Engineering and/or Engineering Technology Divisions for the solution of design problems, for effecting modifications, and for designing new components. When the design phase of a job affecting pressure systems is finished, the complete package is reviewed and approved by a principal engineer who is an expert in the interpretation of the ASME Boiler and Pressure Vessel Codes and the RDT Standards. A work order is then issued to initiate the job.

The field engineer, a member of the Plant and Equipment Division, is responsible for providing to the shops and/or the field craftsmen the proper materials for each job. He must assure himself that these materials are used throughout the job as specified. The field engineer is also responsible for ensuring that qualified craftsmen and proper techniques are used. For example, proper welding techniques and welders formally tested (proven capability to produce welds that meet or exceed quality specifications of the ASME Boiler and Pressure Vessel Code, Section IX)

in the P&E qualification program are used; a qualified welding inspector approves the work. The field engineer is assisted in accomplishing these responsibilities by the Quality Assurance and Inspection Department personnel.

All spare and replacement reactor components are fabricated according to the original or improved ORR specifications under the ORNL Quality Assurance (QA) Program. No mechanical changes are made without official approval. Mechanical changes are documented by issuance of a "Mechanical Design Change Memo" (Example 6.3) which requires several levels of approval by members of the Operations Division and an engineer from the appropriate design group. The mechanical change memo authorizes a change to be made; design work, approved drawings, and the necessary procedures are provided by the appropriate design group. For very large jobs, a formal overall plan is developed and may include a PERT (computer-developed critical path) schedule.

The ORR complex has two levels of essentiality in regard to quality assurance. These are the primary cooling system and the secondary cooling system. Specifications for each of these systems are different in regard to the types of materials, certification of materials, welding specifications, and welding inspections. It is the responsibility of the Reactor Supervisor through his staff (usually the facility maintenance coordinator) to ensure that all work on each system meets the appropriate specifications.

11.2.5. Auditing

As the work is completed, the P&E maintenance supervisor sends a card indicating the work performed to the P&E programmed maintenance office for check of completion of work and audit.

Repair of equipment is audited by Plant and Equipment supervision during performance of the work and by operating personnel. Inspection is usually made by the facility maintenance coordinator who must give

his approval before the repair is considered completed. The P&E field engineer and/or maintenance supervisor are also responsible for inspecting the work as it is being done to ensure that it meets the required specifications.

11.3. Electronic and Process Instrumentation

Instrument maintenance procedures for the ORR are on file in the ORR area field office of the Reactor Controls Section of the Instrumentation and Controls Division.

The inventory of spare parts for the electronic and process instrumentation is maintained by supervision of the field crew of the Instrumentation and Controls Division. The criteria used in selecting parts for inventory are based upon two levels of essentiality.

11.3.1. Category I - Minimum Control and Safety Instrumentation Required for Startup and Continuity of Operations

Instruments which fall into this category are those which, if faulty, will prevent the starting of the reactor. For these channels, redundancy is followed; that is, a one-for-one replacement is in inventory, usually in the form of spare chassis or components. These are stocked in the instrument repair shop at the facility. Spare parts, such as vacuum tubes and resistors, are available from the ORNL Electronic Stores. Special items not held in inventory at ORNL Electronic Stores are stocked by field supervision of the Instrumentation and Controls Division in the instrument shop for the facility.

11.3.2. Category II - Other Instrumentation Not Falling into Category I

Instruments included here comprise systems which are not related to reactor safety and control, e.g., pressure switches that monitor the water level in the basin of the cooling tower. Component parts necessary for repair of items in this category are maintained in ORNL Stores or are available as needed from the manufacturer's representative in the area.

The waiting period for delivery is generally short, and a substitute monitoring unit suffices as a replacement for the faulty one. Continuity of operation of units in this category is not critical for reactor safety and operation.

All replacement components and/or parts have reliability equal to, or greater than, those originally used. This is verified by adhering to the original design specifications.

11.4. Inspection of Specialized Equipment

All pressure vessels, filters, and hoisting equipment are inspected routinely by personnel of the Quality Assurance and Inspection Department, an independent group with responsibility for providing quality control of these items. The scheduling and reporting of these inspections have been programmed for computer control; the schedule was selected to be compatible with the operational activities of the Operations Division. The Reactor Supervisor works with the Quality Assurance and Inspection Department to accomplish the inspections.

Work of a nonroutine nature in changing components and/or systems is subjected to engineering evaluation to ensure that the integrity is equal to, or greater than, the initial installations. For example, if penetrations to lines or pressure vessels are required, the Quality Assurance and Inspection Department evaluates the components to be used and the type and quality of welds and ensures that the installation technique conforms to approved ORNL MET Standards. In addition, a change in components reflected in the spare parts inventory is evaluated and approved by the Quality Assurance and Inspection Department.

The Quality Assurance and Inspection Department has issued Manual S to document the nondestructive inspection procedures and the certified personnel used as part of the Laboratory's Quality Assurance Program. The procedures comply with the requirements of the RDT Standards and Section III of the ASME Boiler and Pressure Vessel Code. A training program is in effect to qualify and certify inspectors to the Society for Nondestructive Testing Practices, SNT-TC-1A to perform liquid penetrant, radiographic, ultrasonic, and magnetic particle examination of materials and welds. These procedures and inspectors are used for all inspection operations relative to nuclear reactors and associated equipment.

In addition to the above certification program, several Quality Assurance and Inspection Department personnel have successfully completed the boiler and pressure vessel inspector training course of the Travelers Insurance Company and received a passing grade and a Certificate of Competency from the State of Tennessee Department of Labor, Division of Boiler and Pressure Vessel Inspection.

11.5. Operational Maintenance Activities

Since the ORR operates continuously (24-h day, 7-day week), the burden of routine inspection and surveillance of operating equipment is borne by the facility operating group. This equipment is inspected at various intervals, depending upon its importance. Inspections are made on hourly, shift (8 h), daily, and weekly schedules. This type of inspection cannot be disassociated from routine operation. For example, when a reactor operator is making his operating checks, he is also required to inspect the equipment for malfunction or possible malfunction. Usually, if a malfunction of operating equipment is discovered, a standby unit is placed in service while the disabled equipment is being repaired. In this manner,

an almost continuous surveillance is made. The operating group does not attempt to make repairs when these malfunctions are discovered. Instead, they submit work requests to the facility maintenance coordinator who schedules the repair work according to the importance of the equipment and its relationship with the overall maintenance schedule; for example, for a breakdown when a standby unit is available, a lower priority is assigned to the repair. If no standby equipment is available, repairs are usually made immediately. For this, a Plant and Equipment Work Request (Example 11.1) is written informally and can be initiated by any member of the operating group. The same documentation and auditing required of more formal work requests or work orders are required for this type also.

Prior to the startup of a nuclear reactor, all components must, of course, be operating properly. To ensure that all initial components are operating reliably, a startup checklist is completed and audited by the supervisor in charge of the operation. When the reactor is shut down, a need exists for assurance that specific components and systems have been properly secured. Such assurance is guaranteed by the completion of these activities and completing the "Shutdown Checklist." Refer to Section 8 for detailed checklists.

11.5.1. Operability Tests

Functional operability tests are conducted by personnel of the Operations Division. Normally, these tests are performed while the reactor is shutdown since the system being tested cannot be isolated from the operating systems without affecting normal operating conditions. The procedures are well-documented in this operating manual, and specific check sheets are completed and become a part of the permanent records. The responsibility, scheduling, and documentation for tests in this category are within the Operations Division and are handled through, and are a part of, the major shutdown schedule for the reactor.

PLANT & EQUIPMENT WORK REQUEST

UCN-4665
(3 12-80)

ORIGINATOR	PHONE NO.		DATE WRITTEN	DATE REQUESTED	JOB NUMBER
APPROVED BY	BUILDING	MAIL STOP	ACCOUNT NUMBER	WORK ORDER NUMBER	A-4460

WORK PERMITS REQD.: ☐ NONE ☐ ELECTRICAL ☐ EXCAVATION ☐ SAFETY ☐ RADIATION ☐ OTHER

WORK DESCRIPTION: (WHAT, WHERE, WHY, HOW) SPECIAL Q_A ACTIONS ☐ NO ☐ YES (SPECIFY)

INCLUDING DRAWING NUMBERS, INSPECTION, TEST, CLEANLINESS, OR OTHER SPECIFIC REQUIREMENTS

FOR P & E USE ONLY

CUSTOMER	JOB TITLE	BUILDING

SUPPLEMENTAL DISTRIBUTION: ENGINEER	PROGRAMMED MAINT. NUMBER	ENGINEER	CODE	LABOR ESTIMATE	SCHEDULE DATES
	EQUIPMENT CLASSIFICATION	SIC	CODE	MATERIAL ESTIMATE	START
	WORK CLASSIFICATION	PLANNER ESTIMATOR	CODE	TOTAL $	COMP.

CRAFT CODE BY DEPARTMENT FAB.	MAINT	RES.	ESTIMATED HOURS	BACK LOG CODE	DESCRIPTION	CRAFT SCHEDULE
TOTAL HOURS						

APPROVED	DATE	FINAL INSPECTION	DATE

DISTRIBUTION: Original, Blue, Green - P&E; Yellow Retained by Originator

Example 11.1.

11.5.2. Spare Parts Stock

The Reactor Supervisor is responsible for keeping an adequate supply of spare parts on hand. Criteria used in selecting the spare parts to be stocked are based on the level of essentiality of the component, the manufacturer's recommendations, the mechanical-maintenance history on similar equipment that has been in service for a long period of time, and whether the parts are shelf items in a local city. All are purchased in accordance with original specifications and are established as stock items in ORNL Special Materials Stores. The inventory is maintained through the use of an IBM card system.

A card file is located in the facility maintenance coordinator's office. This file contains a card for each piece of equipment listing the name of the manufacturer, the part, the vendor's part number, the ORNL standard stock number, and the number of parts in stock.

11.5.3. Auditing of Maintenance by Operations

The facility maintenance coordinator audits each maintenance job either while the work is being performed or after its completion. If an important piece of equipment is being repaired, the facility maintenance coordinator and the P&E field engineer direct the work as it is being done. For routine repair work on less important equipment, the maintenance coordinator checks out the equipment before it is placed back into service. The facility maintenance coordinator's signature on the maintenance record form ensures that the work has been done properly and the equipment is ready to be returned to service. The Reactor Supervisor also audits the maintenance records periodically.

New ORR core components are checked for fit by installation in a component mock-up prior to installation in the reactor. This check ensures that the particular component is properly fabricated in regard to fitting mating components.

11.5.4. Auditing by Independent Committees

All facets of the ORR complex operation are reviewed annually by two independent committees: the Reactor Operations Review Committee, composed of ORNL senior scientists and/or engineers who are not affiliated with the Operations Division, and the Reactor Safety Review Committee of the Oak Ridge Operations Office of the Department of Energy. These committees are charged with the responsibility for detailed review of the operation and maintenance of the facility with particular emphasis on safety; they evaluate conditions and submit official recommendations to improve the operational aspects of the facility. Basically, the review consists of a subcommittee reviewing the operational logbooks, data sheets, and maintenance records; observing the activities during reactor shutdown and startup; and making a visual inspection of the facility. The committee meets with the Reactor Supervisor and top supervision of the Operations Division, and pertinent subject matter is discussed. The reviews are officially documented and published.

11.6. Records

Including those records which have previously been mentioned in this procedure, history of maintenance activities is retained in a variety of formats. Table 11.1 itemizes these sources and includes pertinent information. These various sources of information relating to maintenance history are of significant value in day-to-day operation.

Table 11.1. List of maintenance records - ORR

Item	Reference document	Where filed	Filed by	How long kept	Audited by	Remarks
Programmed Maintenance	ORNL-TM-2161					
Master list		On computer	Plant & Equipment Prog. Maint. staff	Permanently		Continually updated by Fac. Maint. Coord. and P&E field engineer
IBM cards		Rm. 208, Bldg. 3042	Facility Maintenance Coordinator	Permanently	Computer, Prog. Maint. Staff, and Fac. Maint. Coord.	
Reschedule list				Until next list issued		Copy to Facility Maint. Coord. on request
Manufacturers' manuals		Rm. 208, Bldg. 3042	Fac. Maint. Coord.			
Rod drive notebooks	ORR Shim Safety Control-Rod-Drive Procedure Book	Rm. 208, Bldg. 3042	Specific day supervisor	Permanently	Fac. Supv.	
Mechanical Maint. Record		Rm. 208, Bldg. 3042	Fac. Maint. Coord.	Permanently	Fac. Supv., Div. Maint. Coord.	
Drawings on facilities		Rm. 309, Bldg. 3042	Specific shift supervisor	Permanently		

Table 11.1. (continued)

Item	Reference document	Where filed	Filed by	How long kept	Audited by	Remarks
Original specifications		Rm. 204, Bldg. 3042	Fac. Supv.			
Certification of materials, welding, and other inspections		In files of Div. performing work	By Div. performing work		Qualified people in Div. doing the work	Most of this work is done by QA&I and P&E Div.
Qualification of craftsmen	P&E Div. Welder Status Report and other P&E procedures	P&E Div. files	P&E Div.	Permanently	Qualified people in P&E Div.	
Mechanical Change Memo	Memo from Facility Supervisor to distribution dated 10-4-68	ORR Control Room	Day shift ORR supervisor	Permanently	Designers, Oper. Supv. up through Div. Dir.	
Pressure-containing equipment tests	QA&I Manual S, Section 13, and ORNL SPP 12-B and 16	On computer	QA&I	Permanently	QA&I, Fac. Supv., Fac. Maint. Coord., RCO	Copies of test results distributed monthly
Filter Test Report	QA&I Manual Section 16, and ORNL Bulletin DD-116	On computer	QA&I	Permanently	QA&I, Fac. Supv., Fac. Maint. Coord., RCO	Published in fac. quarterly report

Table 11.1. (continued)

Item	Reference document	Where filed	Filed by	How long kept	Audited by	Remarks
Iodine Absorber Test Report	QA&I Manual Section 15, F. R. Bruce Memo 2/3/67	Fac. quarterly report	Fac. Supv.	Permanently	QA&I, Fac., Supv.	Published in fac. quarterly report
Hoisting Equipment Safety Report	QA&I Manual S, Section 14, and ORNL SPP-16	On computer	QA&I	Permanently	QA&I., Fac. Supv. Fac. Maint. Coord., Safety Sec.	Copies of test results distributed monthly
Hoisting Slings		On computer	QA&I	1 yr	Fac. Maint. Coord., Fac. Supv.	Bad chokers discarded
Shift Check Sheets	ORR Oper. Manual, Sec. 8.1.2	Rm. 208, Bldg. 3042	Fac. Maint. Coord.	1 yr	Fac. Maint. Coord., Fac. Supv.	
Routine Report Forms	ORR Oper. Manual, Sec. 8.1.3	Rm. 208, 3042	Fac. Maint. Coord.	1 yr	Fac. Maint. Coord.	
Operating Shift Logbook	ORR Oper. Manual, Sec. 8.1.4	Rm. 305, Bldg. 3042	Day Shift Supervisor	Permanently	Fac. Supv.	
Maintenance Request (UCN-8321)	Memo from Fac. Supv. to Dist. dated 7/13/67			Not filed	Fac. Supv.	Any pertinent information is transferred to Mech. Maint. Record

Table 11.1. (continued)

Item	Reference document	Where filed	Filed by	How long kept	Audited by	Remarks
Job Order (UCN-8320)	Memo from Fac. Supv. to Dist. dated 7/13/67	Rm. 208, Bldg. 3042	Fac. Maint. Coord.	Permanently	Fac. Supv.	Formal work order
Startup Checklist	ORR Oper. Manual, Sec. 8.1.3	Control room	Day shift supervisor	Permanently	Fac. Supv.	
Shutdown Schedule		Rm. 305, Bldg. 3042	Day shift supervisor	Permanently	Fac. Supv.	
Spare Parts Card File		Rm. 208, Bldg. 3042	Fac. Maint. Coord.	Permanently	Fac. Supv.	
Operating Procedures	ORNL-TM-506	Control room, Fac. Supv. office	Fac. Supv.	Permanently	Operations Supv. through Sec. Head	
Tool and Equipment Check	UNC-5565	Not filed			Assigned operator	Destroyed on completion of shutdown
Radiation Work Permit	UNC-3779	Health Physics, Bldg. 3042	Health Physics	Permanently	Fac. Supv., RCO	
Cooling Tower Insp. (UCN-5595)	Manufacturer's Manuals	Rm. 208, Bldg. 3042	Fac. maint. Coord.	1 yr	Fac. Supv.	
Air Lines Filter Checklist	Included on Shutdown Schedule	Rm. 208, Bldg. 3042	Fac. Maint. Coord.	1 yr	Fac. Supv.	

Table 11.1. (continued)

Item	Reference document	Where filed	Filed by	How long kept	Audited by	Remarks
Instr. Maint. Practices	Reactor I&C Maint. Proc. No. ORR 300					
I&C Maint. Schedule	Reactor I&C Maint. Proc. No. ORR 301	ORR Oper. shift supv. office	Oper. shift supervisor	Permanently	Reactor Controls Maint. Supv.	
I&C Maint. Procedures and data sheet	Reactor I&C Maint. Manual Proc. Nos. 302 and 303	ORR Oper. shift supv. office	Oper. shift supervisor	Permanently	Reactor Supervisor	
Card File - Maint. Records	Reactor I&C Maint. Manual Proc. No. 300 par. 4.1	ORR shop office	I&C field foreman	Permanently	I&C Div. staff	
Daily Instr. Maint. Log	Reactor I&C Maint. Manual Proc. No. 300 par. 4.1	ORR shop office	I&C field foreman	Permanently	Reactor Controls Sec. staff	Carbon copy of log routed to I&C Engr. Sec. for audit
Daily Routine Instr. Checks	ORR Oper. Manual, Sec. 8.1.2	ORR Oper. shift supv. office	Oper. shift supervisor	1 yr	Oper. shift engr. and day engr.	
Fac. Contamination and Radiation Alarm Check Sheets	ORNL-TM-943	Monitoring Sys. Dev. group of I&C, Bldg. 3500	I&C MSD group	Permanently	I&C Monitoring Sys. Dev. group	All instruments checked every two months

Table 11.1. (continued)

Item	Reference document	Where filed	Filed by	How long kept	Audited by	Remarks
Instrument Drawings		I&C field engr. office and reactor control room		Permanently	I&C Reactor Controls Sec., Oper. Fac. Supv.	Tracings kept in I&C Reactor Controls drafting file, Bldg. 3500
Reactor Controls Change Memo		ORR I&C foreman's office	I&C foreman	Permanently	Designers, Oper. Supv., to Div. Dir.	Original in Oper. Div. Dir. file
Nuclear Instruments Repair		ORR I&C foreman's office	I&C foreman	Permanently		
Manufacturers' Manuals		ORR I&C foreman's office	I&C foreman	Permanently		

12. INFORMATION AND JOB INSTRUCTION CHECKLISTS

12.1. Introduction

The Information and Job Instruction Checklist for the Oak Ridge Research Reactor (Example 12.1), Operation Checklist for Building 3004 (Example 12.2), and Instruction Checklist for LITR Standby and Building 3001 (Example 12.3) are used as guides for training reactor operating personnel, principally to ensure that all areas of the complex are covered. The checklists are also useful for periodic review of the facilities. The principal sources of information to be used with the checklists are the "ORR Operating Manual," "The Oak Ridge Research Reactor - A Functional Description," "Drawing File," "Operating Safety Limits for the Oak Ridge National Laboratory Research Reactor (ORR)," "Operating Manual for the LITR," "Operating Manual for the Shutdown OGR," and "Special Instruction Notebook."

INFORMATION AND JOB INSTRUCTION CHECKLIST FOR THE OAK RIDGE RESEARCH REACTOR

Contents

I. Design and Description of Facility

A. Reactor Core Components
B. Reactor Vessel
C. Control-Rod-Drive Mechanisms
D. Nuclear Instrumentation and Control Systems
E. Process Instrumentation and Control Systems
F. Cooling Water Systems
G. Buildings
H. Irradiation Facilities (In-Core and Additional Systems)
I. Pool Area
J. Utilities for Building 3042 and Area
K. Waste Disposal Systems
L. Emergency Systems
M. Support Systems Provided by ORNL

II. Operational Activities

A. Pool Area
B. Cooling Systems
C. Control Room
D. Routine Operation
E. Reactor Cycle
F. Operational Handbook
G. Health Physics Aspects
H. Reference Information

Example 12.1.

INFORMATION AND JOB INSTRUCTION CHECKLIST FOR THE OAK RIDGE RESEARCH REACTOR

Name _____

	Has been taught	Has done or made use of
I. Design and Description of Facility		
A. Reactor Core Components		
1. Fuel elements		
a. One-half fuel element (presently not in use)	_____	_____
b. Whole element	_____	_____
2. Shim rods		
a. Al-Cd (presently not in use)	_____	_____
b. Be-Cd (presently not in use)	_____	_____
c. Fuel-Cd	_____	_____
3. Beryllium core pieces		
a. Hollow and inserts	_____	_____
b. Solid pieces	_____	_____
4. N_F tray (presently not in use)	_____	_____
5. Isotope stringers (presently not in use)	_____	_____
6. Neutron source insert (presently not in use)	_____	_____
7. Aluminum core pieces	_____	_____
8. Iodine stringer	_____	_____
9. End-box adapters	_____	_____
10. Hydraulic tubes (presently not in use)	_____	_____
11. In-core experiments (see Irradiation Facilities)	_____	_____

Example 12.1. (continued)

	Has been taught	Has done or made use of
B. Reactor Vessel		
1. Access cover and closure	_____	_____
2. Upper bearing supports	_____	_____
3. Lower grid	_____	_____
4. Lower bearing support plate	_____	_____
5. Inlet water line expansion joints	_____	_____
6. Large facility seals (leak detectors)	_____	_____
7. H_2O holes and plugs	_____	_____
8. Thermal shields		
a. Facilities	_____	_____
b. Inside vessel	_____	_____
c. Pool floor	_____	_____
d. Poolside facility	_____	_____
9. Ion chamber shield	_____	_____
10. Access cover	_____	_____
11. Access cover flange	_____	_____
12. Reactor tank head V-1 through V-10	_____	_____
13. Slant access tubes	_____	_____
14. Bottom tank (subassembly B-2)	_____	_____
15. D_2O system	_____	_____
16. Large facility cooling water flow (primary water)	_____	_____
17. Poolside facility (see Irradiation Facilities)	_____	_____
18. Ion-chamber racks	_____	_____

Example 12.1. (continued)

	Has been taught	Has done or made use of
19. Bottom plug	_____	_____
a. Shock absorber	_____	_____
b. Drive tubes	_____	_____
20. Spray nozzles	_____	_____
21. ^{16}N dispersion	_____	_____
22. Beam-hole cooling	_____	_____
23. Tubes for gamma chambers	_____	_____
C. Control-Rod-Drive Mechanisms		
1. Ball engagement mechanism assembly		
a. Guide tube	_____	_____
b. Push rod	_____	_____
c. Stellite balls	_____	_____
d. Plunger	_____	_____
2. Operator assembly		
a. Upper housing	_____	_____
(1) Snubber assembly	_____	_____
(2) Lock-unlock mechanism	_____	_____
b. Lower housing	_____	_____
(1) Magnet	_____	_____
(2) Magnet armature	_____	_____
(3) Release spring	_____	_____
3. Recocking mechanism assembly	_____	_____
a. Recocking springs	_____	_____
b. Recocking pins	_____	_____
4. Drive gear box	_____	_____
a. Drive screw (worm gear)	_____	_____

Example 12.1. (continued)

	Has been taught	Has done or made use of
5. Worm gear housing	_____	_____
a. Coarse selsyn	_____	_____
b. Fine selsyn	_____	_____
6. Mounting plate	_____	_____
7. Drive electrical motors	_____	_____
8. Tachometer generator (servo rod only)	_____	_____
9. Upper limit switch	_____	_____
10. Clutch switch	_____	_____
11. Push-rod response switch	_____	_____
12. Seat switch	_____	_____
13. Lower limit switch	_____	_____
14. Magnet amplifiers	_____	_____
15. Timers	_____	_____
16. Selsyns (coarse and fine)	_____	_____
D. Nuclear Instrumentation and Control System		
1. Counting-rate-meter channels		
a. Fission chamber	_____	_____
b. Pulse preamplifier	_____	_____
c. Pulse amplifier	_____	_____
d. Counting-rate meter	_____	_____
e. Counting-rate-meter recorder (set points)	_____	_____
f. Scaler	_____	_____
g. Audible amplifier and speakers	_____	_____
h. Counting-rate-meter period recorder (set points)	_____	_____

Example 12.1. (continued)

	Has been taught	Has done or made use of
2. Log-N channels		
a. Ion chamber (compensated)	_____	_____
b. High-voltage supply	_____	_____
c. Negative voltage	_____	_____
d. Log-N amplifier	_____	_____
e. Period amplifier	_____	_____
f. Log-N recorder	_____	_____
g. Log-N period recorder	_____	_____
3. Safety channels		
a. Ion chamber (uncompensated)	_____	_____
b. Sigma amplifier	_____	_____
c. Safety recorder	_____	_____
d. Sigma bus	_____	_____
e. Magnet amplifiers	_____	_____
f. Safety preamplifier	_____	_____
4. Gamma channels		
a. Ion chamber	_____	_____
b. Gamma recorder	_____	_____
5. ^{16}N channel		
a. Ion chamber	_____	_____
b. Electrometer	_____	_____
c. Voltage supply	_____	_____
d. ^{16}N recorder	_____	_____
6. Micromicroammeter channel		
a. Chamber	_____	_____
b. Noise monitor	_____	_____
c. Recorders	_____	_____
7. Servo channel		
a. Chamber	_____	_____
b. Limit switches	_____	_____
c. Servo amplifier	_____	_____
d. Voltage supply	_____	_____
e. Negative-voltage inhibit	_____	_____

Example 12.1. (continued)

	Has been taught	Has done or made use of
8. Reactor water activity	_____	_____
9. Pool water activity	_____	_____
10. Reactor secondary water activity	_____	_____
11. Degasifier activity	_____	_____
12. POG radiation	_____	_____
13. NOG radiation	_____	_____
14. Containment gamma monitors	_____	_____
15. Radiation warning and communication system	_____	_____
a. Monitrons	_____	_____
b. Continuous air monitors (old and new)	_____	_____
16. β-γ background survey meters	_____	_____
E. Process Instrumentation and Control Systems		
1. Reactor primary water inlet temperature (readout and alarms)	_____	_____
2. Reactor primary water outlet temperature channels	_____	_____
3. ΔT channels	_____	_____
4. Reactor secondary basin water temperature	_____	_____
5. Reactor secondary heat-exchanger average temperature	_____	_____
6. Pool primary coolant temperature channel	_____	_____
7. Pool secondary coolant temperature	_____	_____
8. POG filter-pit temperature	_____	_____

Example 12.1. (continued)

		Has been taught	Has done or made use of
9.	NOG filter-pit temperature	_____	_____
10.	Cell-ventilation filter-pit temperature	_____	_____
11.	Main pump bearing temperature	_____	_____
12.	Reactor primary coolant flow	_____	_____
13.	Reactor primary facility cooling flow	_____	_____
14.	Reactor primary demineralizer flow	_____	_____
15.	Pool primary demineralizer flow	_____	_____
16.	Pool primary coolant flow	_____	_____
17.	Pool secondary coolant flow	_____	_____
18.	Reactor primary tank pressure limitations	_____	_____
19.	Reactor primary pressure near strainer pit	_____	_____
20.	Reactor primary tank ΔP	_____	_____
21.	Reactor secondary system pressure	_____	_____
22.	NOG system pressure, ΔP across filters	_____	_____
23.	POG system pressure, ΔP across filters	_____	_____
24.	Cell-ventilation system pressure, ΔP across filters	_____	_____
25.	Total solids indicator	_____	_____
26.	Reactor water resistivity	_____	_____
27.	Pool water resistivity	_____	_____
28.	Reactor demineralizer effluent resistivity	_____	_____

Example 12.1. (continued)

	Has been taught	Has done or made use of
29. Reactor tower pH	_____	_____
30. Pool tower pH	_____	_____
F. Cooling Water Systems		
1. Reactor primary water system		
a. Exit lines from reactor vessel	_____	_____
b. 36-in. section of exit water line	_____	_____
c. Decay tank with screens	_____	_____
d. Manual pump inlet valves	_____	_____
e. Main primary pumps	_____	_____
f. Shutdown pump	_____	_____
g. Gasoline pump (standby)	_____	_____
h. dc motors	_____	_____
i. Mission-type check valves	_____	_____
j. 24-in. butterfly bypass valve	_____	_____
k. Heat exchangers	_____	_____
l. Bypass filters	_____	_____
m. Venturi	_____	_____
n. Strainer	_____	_____
o. 24-in. manual valve	_____	_____
p. Expansion joints (inlet and exit lines)	_____	_____
q. Degasifier	_____	_____
r. Facility pumps	_____	_____
s. Facility cooling flows	_____	_____
t. Ball-float traps	_____	_____
u. Demineralizers (cation and anion) north, south, and degasifier	_____	_____
v. Pipe-chase grinnel valve	_____	_____
w. Equalizer leg		
(1) orifice	_____	_____
(2) alarm	_____	_____
(3) scram	_____	_____
(4) primary pumps shutdown	_____	_____
(5) degasifier line	_____	_____

Example 12.1. (continued)

	Has been taught	Has done or made use of
x. Syphon break		
(1) tank negative pressure relief	_____	_____
(2) reactor tank swing check valves	_____	_____
(3) exit line syphon break	_____	_____
(4) gas removal pressure equalization valve	_____	_____
(5) reactor-center pool dam check valve	_____	_____
(6) pool level	_____	_____
(7) process water, reactor pool	_____	_____
y. Inlet lines to pool vessel		
(1) spools	_____	_____
(2) strainers	_____	_____
(3) ΔP (spools)	_____	_____
2. Reactor secondary water system		
a. 16-in. bypass valve	_____	_____
b. 350-hp pumps	_____	_____
c. 250-hp pumps	_____	_____
d. Manual pump inlet and exit valves	_____	_____
e. Check valves	_____	_____
f. Risers (north and south)	_____	_____
g. Tower fans (north and south)	_____	_____
h. Make-up water line	_____	_____
(1) Automatic valve	_____	_____
(2) Manual valve	_____	_____
i. Drain line	_____	_____
j. Blowdown lines	_____	_____
k. Acid addition system	_____	_____
(1) Tank	_____	_____
(2) Pumps	_____	_____
(3) Controls	_____	_____

Example 12.1. (continued)

	Has been taught	Has done or made use of
3. Pool primary system		
a. Reactor pool inlet(s)	_____	_____
b. Center and west pool inlets	_____	_____
c. Reactor pool exit	_____	_____
d. Scum gutter exits	_____	_____
e. Make-up tank	_____	_____
f. 100-gpm pool demineralizer pump	_____	_____
g. Pool demineralizer cation unit	_____	_____
h. Pool demineralizer anion unit	_____	_____
i. Christmas tree	_____	_____
j. Fill and drain pump	_____	_____
k. Storage tanks	_____	_____
l. 900-gpm pool primary pump	_____	_____
m. Strainer	_____	_____
n. Filters for pool	_____	_____
o. Heat exchanger	_____	_____
4. Pool secondary water system		
a. Automatic throttling valve	_____	_____
b. Tower bypass manual valve	_____	_____
c. Pool basin	_____	_____
(1) Make-up manual valve	_____	_____
(2) Make-up float valve	_____	_____
(3) Drain line	_____	_____
d. Pool tower fan	_____	_____
(1) Motor, breaker, start and stop switches, etc.	_____	_____
e. 900-gpm pump	_____	_____
f. Blowdown line	_____	_____
g. Acid-addition system	_____	_____
(1) Tank	_____	_____
(2) Schematic of acid flow and controls	_____	_____

Example 12.1. (continued)

	Has been taught	Has done or made use of
G. Buildings		
1. Building 3042		
a. Construction	_____	_____
b. Layout		
(1) Pipe chase, pipe tunnel, subpile room, and hot cells	_____	_____
(2) Reactor pools	_____	_____
c. Equipment		
(1) Truck doors, H&V units, and elevator	_____	_____
(2) Overhead crane and motorized bridge	_____	_____
(3) Overhead fans	_____	_____
d. Communications		
(1) Phone, Teletalk system, and public-address system	_____	_____
(2) Radiation and contamination alarm system	_____	_____
2. Building 3085 - primary pump house	_____	_____
3. Building 3102 - heat-exchanger pit	_____	_____
4. Building 3103 - reactor tower	_____	_____
5. Building 3086 - pool tower	_____	_____
6. Building 3109 - POG filter pit	_____	_____
7. Building 3125 - NOG filter pit	_____	_____
8. Building 3106 - cell-ventilation filter pit	_____	_____

Example 12.1. (continued)

	Has been taught	Has done or made use of
9. Building 3039 - stack area	_____	_____
10. Buliding 3095 - warehouse	_____	_____
11. Building 3087 - Trane coolers	_____	_____
12. Building 3089 - A/C tower	_____	_____
H. Irradiation Facilities (In-Core and Additional Systems)		
1. Hydraulic tubes (presently not in use)	_____	_____
a. In-core pieces	_____	_____
b. Loading stations	_____	_____
c. Rabbits	_____	_____
2. In-core experiments (current list)	_____	_____
3. Isotope and iodine stringers (see core components)	_____	_____
4. Horizontal beam holes (HB-1, -2, -3, -4, -5, and -6)	_____	_____
5. Slant access tubes	_____	_____
6. North and south facilities	_____	_____
a. HN-1, -2, -3, and -4	_____	_____
b. HS	_____	_____
7. Pool-side facility	_____	_____
8. Gamma grid (presently not in use)	_____	_____

Example 12.1. (continued)

	Has been taught	Has done or made use of
I. Pool Area		
1. Motorized bridge	_____	_____
2. Isotope bridge	_____	_____
3. Isotope platform	_____	_____
4. Isotope tools	_____	_____
5. Fuel element tools	_____	_____
6. Core tools	_____	_____
7. Dam	_____	_____
8. Underwater saw	_____	_____
9. Chokers	_____	_____
10. East bridge	_____	_____
11. Underwater lights	_____	_____
12. Fuel (spent) carriers	_____	_____
13. Isotope carriers	_____	_____
a. Sugarman	_____	_____
b. Iodine	_____	_____
c. Others	_____	_____
14. Gamma grid (presently not in use)	_____	_____
15. Fuel racks	_____	_____
16. Beryllium rack	_____	_____
17. Utility rack	_____	_____
18. Neutron radiography (presently not in use)	_____	_____

Example 12.1. (continued)

	Has been taught	Has done or made use of
J. Utilities for Building 3042 and Area		
1. Electrical (D-54474)	_____	_____
a. Substations	_____	_____
b. Voltages and phases	_____	_____
2. Process water (D-51981)	_____	_____
3. Demineralized water (D-51980)	_____	_____
4. Potable water	_____	_____
5. Steam supply (D-51983)	_____	_____
6. Compressed-air supply (D-51982)	_____	_____
7. Helium supply	_____	_____
8. Caustic and acid	_____	_____
K. Waste Disposal Systems		
1. Solids	_____	_____
a. Hot cans and hot dumpster	_____	_____
b. Lead-lined dumpster	_____	_____
c. Scrap carrier and burial ground	_____	_____
2. Gases	_____	_____
a. NOG system	_____	_____
(1) Plant service and 3039 stack area	_____	_____
(2) ORR project system	_____	_____
(a) Purpose	_____	_____
(b) Description, including seal tank, catch tank, and filter pit	_____	_____
(c) Instrumentation	_____	_____
(d) Maintenance, if any	_____	_____

Example 12.1. (continued)

	Has been taught	Has done or made use of
b. POG system (presently on standby)	_____	_____
(1) Tie-in to 3039 stack	_____	_____
(2) ORR project system (1-4)	_____	_____
(3) Components including filter pit and blower	_____	_____
c. Cell ventilation	_____	_____
(1) Routine of building duct work	_____	_____
(a) High-bay area and around pool	_____	_____
(b) PWL, PWL battery room, B-9 cubicle, pipe chase, and Loop 2 cell, lab hood, and pipe tunnel	_____	_____
(c) Hot cells	_____	_____
(2) Location of auxiliary control panels	_____	_____
(a) Seal tank		
(aa) Overflow to WC-19	_____	_____
(bb) Inlet lines to seal tank from filter pit and future filter pit	_____	_____
(cc) Level alarms	_____	_____
(b) Water supply to seal tank		
(aa) LCV123A and LCV123B (solenoid-operated) level control valves	_____	_____
(bb) LS123A and LS123B "lo" level and "hi" level switches	_____	_____
(5) Components in filter pit*		
(a) Inlet and outlet dampers and operating mechanism	_____	_____

*Reference blueprints.

Example 12.1. (continued)

	Has been taught	Has done or made use of
(b) Demoisturizer and Aerosolve filter bank	_____	_____
(c) Two absolute-filter banks	_____	_____
(d) Two charcoal-filter banks	_____	_____
(e) Differential pressure gauges and tie-ins	_____	_____
(6) Ventilation duct monitor		
(a) Valving arrangements for air sample flow	_____	_____
(b) Access to G-M tube	_____	_____
(7) Electric-motor-driven blower and dampers		
(a) Manually controlled inlet damper	_____	_____
(b) Automatically controlled exit backdraft damper	_____	_____
(8) Steam turbine driven blower, dampers, and controls	_____	_____
(a) Manual controlled inlet damper	_____	_____
(b) Automatic controlled exit backdraft damper	_____	_____
(c) Air-operated steam supply valve and controls to alarms and automatic operation	_____	_____
(d) Solenoid-operated steam supply valve and controls to alarm and operation manual reset	_____	_____
(9) Ventilation duct from blowers to stack flow element and tie-in to alarm	_____	_____
(10) Alarms in control room and their purposes	_____	_____
(11) Recorded temperatures in control room and purpose	_____	_____

Example 12.1. (continued)

	Has been taught	Has done or made use of
3. Liquids		
a. Intermediate-level waste system	_____	_____
(1) Plant system	_____	_____
(2) WC-19 complex	_____	_____
(3) ORR project system	_____	_____
b. Low-level waste system (process sewer)	_____	_____
ORR project system	_____	_____
c. Sanitary sewer	_____	_____
d. Storm sewer	_____	_____
L. Emergency Systems		
1. Emergency power supply for 3042 area	_____	_____
a. Diesel generator (13.5 kVA)	_____	_____
b. Emergency-power outlets	_____	_____
2. Emergency cooling for reactor primary water	_____	_____
a. Shutdown pump	_____	_____
b. Battery-driven pony motors	_____	_____
c. Gasoline pump	_____	_____
d. Process water for primary cooling	_____	_____
3. Emergency ventilation system	_____	_____
a. Building containment system (shutdown system)	_____	_____
b. Cell-ventilation system (see gaseous waste disposal)	_____	_____
M. Support Systems Provided by ORNL		
1. Health Physics surveillance	_____	_____
2. Fire Department	_____	_____
3. Guard Department	_____	_____
4. Dispensary	_____	_____

Example 12.1. (continued)

	Has been taught	Has done or made use of
5. Maintenance (electrical, etc.)	_____	_____
6. Hot cells	_____	_____
7. Tank farm	_____	_____
II. Operational Activities		
A. Pool area		
1. Overhead crane	_____	_____
2. Motorized bridge	_____	_____
3. Isotope bridge	_____	_____
4. Underwater lights	_____	_____
5. Isotope platform	_____	_____
6. Underwater saw	_____	_____
7. Hydraulic tubes HT-1 and HT-2 (presently not in use)	_____	_____
8. Removal of access cover	_____	_____
9. Raising hold-down arms	_____	_____
10. Removal of fuel elements from core	_____	_____
11. Removal of reflector pieces (beryllium) from core	_____	_____
12. Removal of reflector insert from hollow Be	_____	_____
13. Removal of reflector isotope stringer (presently not in use)	_____	_____
14. Removal of N_F stringer (presently not in use)	_____	_____

Example 12.1. (continued)

		Has been taught	Has done or made use of
15.	Working isotope stringer (presently not in use)	_____	_____
16.	Working N_F stringer (presently not in use)	_____	_____
17.	Assembly/disassembly of iodine stringer	_____	_____
18.	Moving fuel between core and storage racks	_____	_____
19.	Shim rod moves	_____	_____
20.	Experiment insertion/removal from core	_____	_____
21.	Experiment vibration test	_____	_____
22.	Experiment reactivity test	_____	_____
23.	Locking of hold-down arms check	_____	_____
24.	Replacing access cover	_____	_____
25.	Replacement of control-rod-drive mechanisms	_____	_____
26.	Insertion/removal of end-box adapter	_____	_____
27.	Insertion/removal of hold-down arm	_____	_____
28.	Insertion/removal of shock-absorber assembly	_____	_____
29.	Removal of access cover ring	_____	_____
30.	Adjustment of ionization chambers	_____	_____
31.	Cutting spent fuel elements	_____	_____
32.	Cutting spent shim rods	_____	_____
33.	Shipping spent-fuel carrier	_____	_____
34.	Shipping isotope and iodine carriers	_____	_____

Example 12.1. (continued)

	Has been taught	Has done or made use of
35. Inserting/removing hydraulic tube samples, HT-1 and HT-2 (presently not in use)	_____	_____
36. Transferring experiments, etc., to hot cells	_____	_____
B. Cooling Systems		
1. Demineralizer regeneration	_____	_____
2. Reactor cation and anion units	_____	_____
3. Degasifier demineralizer	_____	_____
4. Placing degasifier in service	_____	_____
5. Filling/draining of north and south facilities	_____	_____
6. Drain lines on reactor primary system	_____	_____
7. Filling/draining reactor primary	_____	_____
8. Emergency cooling valving	_____	_____
9. Changing reactor primary filters	_____	_____
10. Inspection of reactor primary strainer	_____	_____
11. Equalizer leg - function	_____	_____
12. Freezing precautions	_____	_____
a. Steam tracings	_____	_____
b. Reversing fans	_____	_____
13. Checks on reactor primary water	_____	_____
a. Radioactivity measurement	_____	_____
b. Specific resistance measurement	_____	_____
c. pH measurement	_____	_____
14. Regeneration of pool demineralizer units	_____	_____

Example 12.1. (continued)

	Has been taught	Has done or made use of
15. Filling/draining reactor, center, and west pools	_____	_____
16. Use of fill and drain pump	_____	_____
17. Storage tank valving	_____	_____
18. Filling/draining of beam holes	_____	_____
19. Pool primary make-up from 3004	_____	_____
20. Changing pool primary filters	_____	_____
21. Inspection of pool primary strainer	_____	_____
22. Cleaning of pool heat exchanger	_____	_____
23. Checks on pool primary water		
a. Radioactivity measurement	_____	_____
b. Specific resistance measurement	_____	_____
c. pH measurement	_____	_____
24. Filling/draining pool secondary	_____	_____
25. Treatment of pool secondary	_____	_____
a. Continuous	_____	_____
b. Periodic	_____	_____
26. Filling/draining reactor secondary	_____	_____
27. Treatment of reactor secondary	_____	_____
a. Continuous (pH, T.S., phosphate, etc.)	_____	_____
b. Periodic (F-14)	_____	_____
c. Hazards involved in handling acid, polyphosphate, and microbiocide	_____	_____
C. Control Room		
1. Console center panel	_____	_____
a. Shim-rod-mode switch	_____	_____
b. Withdraw and insert buttons	_____	_____
c. Servo demand switch	_____	_____

Example 12.1. (continued)

	Has been taught	Has done or made use of
d. N_L and N_F lights (L-39 and L-40)	_____	_____
e. Servo button	_____	_____
f. Manual button	_____	_____
g. Servo limit switches	_____	_____
h. Servo rod indicator dial	_____	_____
i. Servo limit switches	_____	_____
j. Servo amplifier	_____	_____
k. Servo chamber	_____	_____
l. Digital voltmeter		
(1) No. 1 safety	_____	_____
(2) No. 1 gamma	_____	_____
(3) N-16	_____	_____
(4) μμA	_____	_____
m. Fission chamber controls		
(1) Selector switch (on V.B.)	_____	_____
(2) Automatic and manual	_____	_____
(3) Insert and withdraw	_____	_____
2. Left inclined panel of console		
a. Scram switch	_____	_____
(1) Make-up and drop-out indicator light (L-38 and L-38X)	_____	_____
(2) Slow-scram short detector (relay cabinet A)	_____	_____
(3) Scram reset button	_____	_____
b. Raise-test switch	_____	_____
(1) Raise	_____	_____
(2) Test	_____	_____
c. Safety sensitivity meters	_____	_____
d. Reverse-bypass switch	_____	_____
(1) Reverse light (L-36)	_____	_____
(2) Bypass	_____	_____
(3) Five-rod-insert light (L-35)	_____	_____
e. Group-rod withdrawal switch	_____	_____
(1) Intermittent speed	_____	_____
(2) Timer	_____	_____

Example 12.1. (continued)

	Has been taught	Has done or made use of
(3) High speed	_____	_____
(4) Permit withdraw light (L-4)	_____	_____
(5) Fast-period permit button (L-7)	_____	_____
(6) Operator start button (L-2)	_____	_____
(7) Instrument start button (L-1)	_____	_____
(8) Run button (L-3)	_____	_____
f. ORR evacuation system	_____	_____
(1) Evacuation push button	_____	_____
(2) Silence push button	_____	_____
g. Annunciator test push button	_____	_____
3. Control power	_____	_____
a. Special services panel	_____	_____
b. Emergency services panel	_____	_____
c. Normal services panel	_____	_____
4. Amplifier cabinets	_____	_____
a. E-panel switches	_____	_____
b. Reactor power transmitter	_____	_____
c. Servo limit switches	_____	_____
d. Servo amplifier	_____	_____
e. Noise monitor	_____	_____
f. Micromicroammeter power supply	_____	_____
g. Micromicroammeter range selector switch	_____	_____
h. Gamma chambers power supply	_____	_____
i. N-16 chamber voltage		
(1) μμA north and south	_____	_____
j. ac line undervoltage	_____	_____
k. FRCAS	_____	_____
l. Trouble monitor	_____	_____
m. I&C safety channel calibration	_____	_____
n. ORR shim-rod-drop test unit	_____	_____
(1) Release time	_____	_____
(2) Push-rod response	_____	_____
(3) Time of flight	_____	_____

Example 12.1. (continued)

	Has been taught	Has done or made use of
o. Magnet amplifiers	_____	_____
p. Sigma amplifier	_____	_____
q. Sigma bus	_____	_____
r. Gamma monitors (cell ventilation, NOG, reactor primary water, reactor secondary water, degasifier, etc.)	_____	_____
s. Public-address amplifiers	_____	_____
5. Annunciators - The annunciator diagram (print files) should be reviewed to acquaint the operator with the conditions which cause the alarms.	_____	_____
a. Process	_____	_____
b. Nuclear	_____	_____
c. Experiment	_____	_____
d. OGR	_____	_____
e. Miscellaneous	_____	_____
D. Routine Operation		
1. Checks	_____	_____
Each shift checklist should be reviewed. The operator should be familiar with the effort that each item on the lists involves and why it is done.		
a. 8-4 shift checks	_____	_____
b. 4-12 shift checks	_____	_____
c. 12-8 shift checks	_____	_____
d. Weekly checks	_____	_____
e. Building radiation	_____	_____
f. ORR daily water system checks	_____	_____
g. Total solids check	_____	_____
h. Resistivity check	_____	_____
i. pH check	_____	_____
j. Phosphate check	_____	_____
k. Specific gravity check	_____	_____
l. How to take and count water samples	_____	_____
m. Power calculations	_____	_____

Example 12.1. (continued)

	Has been taught	Has done or made use of
2. Bookkeeping		
a. ORR logbook	_____	_____
(1) Demineralizers	_____	_____
(2) Pony motors	_____	_____
(3) Secondary	_____	_____
b. ORR hourly readings	_____	_____
c. ORR accumulated instrument power	_____	_____
d. Startup power calculations	_____	_____
e. ORR daily summary	_____	_____
f. Daily graph	_____	_____
g. Shim-rod-position graph	_____	_____
h. Daily water system checks	_____	_____
i. Daily routine instrument checklist	_____	_____
E. Reactor Cycle		
1. Startup modes	_____	_____
2. Startup checklist	_____	_____
3. Operator start	_____	_____
a. When to press button	_____	_____
b. Status of system (servo or manual)	_____	_____
c. Limitations	_____	_____
4. Instrument start (conditions necessary)	_____	_____
a. Servo limit switches	_____	_____
b. 20 counts on CRM	_____	_____
c. Neutron level below N_L	_____	_____
d. Fission chamber moving and in automatic	_____	_____
e. No servo withdrawal limit	_____	_____
f. Not in run	_____	_____
g. No servo insert error	_____	_____
h. CRM in use and >20 count/s with the log-N <0.001 N_L	_____	_____
5. Run	_____	_____
a. When not to press	_____	_____
b. Sag point	_____	_____
c. When run starts	_____	_____

Example 12.1. (continued)

	Has been taught	Has done or made use of
6. Control Room Recorders		
The operator should learn the recorder switch set points and functions for the recorders listed. The type of sensing element used and its location should be known.		
a. Count rate	_____	_____
b. Counting-rate period	_____	_____
c. Log N	_____	_____
d. Log-N period	_____	_____
e. Safety	_____	_____
f. Gamma chamber	_____	_____
g. Outlet temperature	_____	_____
h. ^{16}N	_____	_____
i. Differential temperature (ΔT)	_____	_____
j. Reactor water activity	_____	_____
k. Reactor secondary water activity	_____	_____
l. Degasifier activity	_____	_____
m. POG activity	_____	_____
n. Pool water activity	_____	_____
o. Pool pH	_____	_____
p. Reactor pH	_____	_____
q. POG vacuum (presently on standby)	_____	_____
r. NOG vacuum	_____	_____
s. Reactor water flow	_____	_____
t. Reactor ΔP	_____	_____
u. Reactor inlet temperature	_____	_____
v. Reactor water resistivity	_____	_____
w. Pool primary water flow	_____	_____
x. Pool temperature	_____	_____
y. Pool water resistivity	_____	_____
z. Facility cooling flow	_____	_____
aa. Reactor demineralizer resistivity	_____	_____
bb. NOG filter-pit temperature	_____	_____
cc. Cell vent filter-pit temperature	_____	_____
dd. Syphon-break north standpipe level, syphon-break south standpipe level, and pool level	_____	_____
ee. Primary flow make-up	_____	_____

Example 12.1. (continued)

	Has been taught	Has done or made use of
7. Full power operation		
a. Normal instrument readings	_____	_____
b. Drift of power (normal)	_____	_____
c. Variation of safeties (normal)	_____	_____
d. Variation of gamma chambers (normal)	_____	_____
e. Variation of reactor primary flow (normal)	_____	_____
8. Shutdown		
a. Shutdown checklist	_____	_____
b. Checking of rod-drive mechanisms	_____	_____
c. Emergency-cooling checklist	_____	_____
d. Reloading schedule	_____	_____
9. Low-flow runs		
a. Use of raise-test switch	_____	_____
b. High sensitivity of safety	_____	_____
c. Manual and servo operation	_____	_____
d. Critical run	_____	_____
F. Operational Handbook		
1. Radiation safety and control	_____	_____
2. Reactor physics	_____	_____
3. Heat transfer and fluid flow	_____	_____
4. Instruments and controls	_____	_____
G. Health Physics Aspects		
1. Use of radiation-contamination instruments		
a. β-γ survey meter	_____	_____
b. Cutie pie	_____	_____
c. Continuous air monitor	_____	_____
d. Monitron	_____	_____
2. Radiation detectors		
a. Personal radiation monitor	_____	_____
b. Pocket pencil meters	_____	_____
c. Direct-reading dosimeter	_____	_____
d. ORNL identification badge	_____	_____

Example 12.1. (continued)

	Has been taught	Has done or made use of
3. Regulated zones	_____	_____
4. Radiation zones	_____	_____
5. Contamination zones	_____	_____
6. C-zone clothing	_____	_____
7. Smearing for contamination	_____	_____
a. α	_____	_____
b. $\beta-\gamma$	_____	_____
8. Counting of smears	_____	_____
H. Reference Information		
1. Blueprints	_____	_____
2. Operating manual	_____	_____
3. Reactor controls change memoranda book	_____	_____
4. ORR logbook	_____	_____
5. ORR quarterly reports	_____	_____
6. Special information book	_____	_____
7. Experiment information book	_____	_____
8. Elementary and logic diagrams	_____	_____
9. Files	_____	_____

Date: _____

This Checklist Applies for: _____

Checked Out By: _____

Example 12.1. (continued)

OPERATION CHECKLIST FOR BUILDING 3004

Name: _____

		Has been taught	Has done or made use of
1.	What is the function of a demineralizer? Why are two tanks necessary?	_____	_____
2.	What does regenerating the demineralizer do?	_____	_____
3.	Why is demineralized water from Building 3004 used in the BSR and ORR?	_____	_____
4.	What are the specifications for the demineralized water?	_____	_____
5.	What is the approximate solids content of the demineralized water?	_____	_____
6.	What are the approximate specifications and solids content of the filtered water (pH and resistance)?	_____	_____
7.	What resin and how much of it is used in the cation tank (cation exchanger)?	_____	_____
8.	What resin and how much of it is used in the anion tank (anion exchanger)?	_____	_____
9.	What is the maximum flow rate for the system?	_____	_____
10.	What is the approximate capacity for the cation exchanger? The anion exchanger?	_____	_____
11.	What is pH? How is it measured?	_____	_____
12.	Describe in detail how a resistance (conductivity) reading is taken? What does this show?	_____	_____

Example 12.2.

		Has been taught	Has done or made use of
13.	What is a Solu-Bridge? What does it show? What other instrument is it like?	_____	_____
14.	Draw a rough flow diagram of Building 3004. Show the flow of water through the units, storage tank, and to the BSR, ORR, Building 3001, and Building 3019.	_____	_____
15.	What is the purpose of the recirculating system? When is the system placed in service? When is the system removed from service? How does the system function when in service?	_____	_____
16.	Of what material are the pipes and tanks of the demineralized water system constructed? Why?	_____	_____
17.	How is the acid head tank refilled? The caustic supply tank?	_____	_____
18.	What acid is used? Why?	_____	_____
19.	Describe the procedure for filling the acid storage tank. The caustic storage tank.	_____	_____
20.	What safety precautions should be taken when using nitric acid and caustic? Why?	_____	_____
21.	Why keep safety showers unobstructed? Where are safety showers located?	_____	_____
22.	How does one know when the cation is exhausted?	_____	_____
23.	How does one know when the anion is exhausted?	_____	_____
24.	How can one tell when both units become exhausted at once?	_____	_____
25.	How is the acid mixed for regenerating the Bldg. 3004 cation resin? The ORR cation resin?	_____	_____

Example 12.2. (continued)

	Has been taught	Has done or made use of
26. Describe the regenerating procedure of the cation resin.	_____	_____
a. Wash flow rate, time, and purpose of the wash.	_____	_____
b. Regeneration specific gravity of acid, flow rate, time, and purpose of regeneration.	_____	_____
c. Rinse flow rate, time, and purpose of the rinse.	_____	_____
d. How can one tell when the regeneration is complete?	_____	_____
27. Describe the regeneration procedure of the anion resin.	_____	_____
a. Wash flow rate, time, and purpose.	_____	_____
b. How is the caustic mixed for regeneration? To what temperature is it heated?	_____	_____
c. Regeneration flow rate, time, and purpose. Why is the flow rate and temperature of the caustic important?	_____	_____
d. Rinse flow rate, time, and purpose.	_____	_____
e. Recycle rinse.	_____	_____
(1) Why use it?	_____	_____
(2) When is it started?	_____	_____
(3) When is it stopped?	_____	_____
28. What is the purpose of the neutralization tank? How is it used?	_____	_____
29. What analysis is made before placing a unit on the line?	_____	_____
30. How is a unit placed on the line?	_____	_____

Example 12.2. (continued)

	Has been taught	Has done or made use of
31. How often is a unit checked when it is on the line?	_____	_____
32. What readings are taken each shift, and what readings are taken each day for a permanent record?	_____	_____
33. How is a batch card made out and what is its purpose?	_____	_____
34. What is the purpose of the various flow meters? Why read them at the end of the month?	_____	_____
35. Why does the pH and the resistance of a water sample from the demineralizers change if breathed on?	_____	_____
36. Why is the resistance and pH of the storage tank always lower than the water directly from the units?	_____	_____
37. What condition at Building 3004 will initiate an alarm at the ORR control room Telealarm panel?	_____	_____
38. Explain how the units are automatically removed from service when the resistivity of the output water of the demineralizer is of poor quality.	_____	_____
39. What could occur on improper valve arrangement of the units during a regeneration?	_____	_____
40. Explain how the regeneration facilities of Building 3004 are used for regeneration of the demineralizers at the ORR.	_____	_____

Date: _____

This Checklist Applies for: _____

Checked Out By: _____

Example 12.2. (continued)

INSTRUCTION CHECKLIST FOR LITR STANDBY AND BUILDING 3001

Name: _____

Contents

I. LITR Standby

A. General Information on LITR Standby

B. Radiation and Contamination Monitoring

C. Routine Checks

II. Building 3001

A. General Information

B. Radiation and Contamination Monitoring

C. Elevator Alarm

D. Emergency - Diesel

E. Routine Checks

F. Heating System, Building 3001

Example 12.3.

	Has been taught	Has done or made use of
I. LITR Standby		
A. General Information on LITR Standby		
1. Reactor vessel	_____	_____
2. Reactor core	_____	_____
3. Cell ventilation	_____	_____
a. Schematic of air flow through vessel and piping	_____	_____
b. Absolute filter	_____	_____
c. Top room	_____	_____
d. West room	_____	_____
e. East room	_____	_____
f. Subpile room	_____	_____
4. NOG system	_____	_____
5. POG system	_____	_____
B. Radiation and Contamination Monitoring		
1. Monitrons	_____	_____
2. Continuous air monitors	_____	_____
C. Routine Checks (refer to shift check sheet)		
1. Absolute filter ΔP	_____	_____
2. Cold weather precautions	_____	_____

Example 12.3. (continued)

	Has been taught	Has done or made use of
II. Building 3001		
A. General Information		
1. Canal containment		
a. Purpose	_____	_____
b. Schematic of air flow	_____	_____
c. OGR negative pressure	_____	_____
d. Duct negative pressure (normal reading)	_____	_____
e. Electric blowers	_____	_____
2. Canal use		
a. List materials that are stored in the canal	_____	_____
b. Isotope storage tank	_____	_____
c. Jetting water from backside of canal walkway	_____	_____
d. Potential contamination in area	_____	_____
3. Canal demineralizer		
a. Schematic of water flow including isotope storage tank	_____	_____
b. Regeneration procedure	_____	_____
c. Isotope storage tank	_____	_____
(1) Solenoid valve	_____	_____
(2) Radiation sensor and purpose	_____	_____
(3) Gamma monitor	_____	_____
(4) Equalizer legs	_____	_____
d. Canal makeup water	_____	_____
4. Exit duct water drainage	_____	_____
5. Building 3002 canal	_____	_____

Example 12.3. (continued)

	Has been taught	Has done or made use of
B. Radiation and Contamination Monitoring		
1. Monitrons	_____	_____
2. Continuous air monitors	_____	_____
3. Alarms received at ORR	_____	_____
C. Elevator Alarm	_____	_____
D. Emergency - Diesel		
1. FRCAS	_____	_____
2. Electric blowers	_____	_____
E. Routine Checks (refer to shift check sheet)	_____	_____
F. Heating System, Building 3001		
1. Object of heating system	_____	_____
2. Location of heaters equipped with thermostats	_____	_____
3. Procedure to take if indoor temperature drops to <50°F	_____	_____

Date: _____

This Checklist Applies for: _____

Checked Out By: _____

Example 12.3. (continued)

DISTRIBUTION LIST

1. D. S. Asquith
2. S. J. Ball
3. G. H. Burger
4. C. D. Cagle
5. G. H. Coleman
6. J. A. Conlin
7-56. B. L. Corbett
57. W. H. Culbert
58. B. H. Cupp
59. A. D. DeVaney
60. C. D. DeVaney
61. W. A. Duggins
62. T. L. Fancher
63. T. P. Hamrick
64. G. R. Hicks
65. R. W. Hobbs
66. S. S. Hurt
67. R. R. Judkins
68. E. D. Lance
69. D. L. Laughlin
70. R. V. McCord
71. F. E. Muggridge
72. L. C. Oakes
73. K. H. Poteet
74. E. L. Preston
75. L. P. Pugh
76. J. A. Ray
77. R. M. Stinnett
78. J. H. Swanks
79. W. A. Johnson, DOE-ORO
80. Central Research Library
81. Document Reference Section
82-83. Laboratory Records Department
84. Laboratory Records, ORNL R.C.
85. ORNL Patent Office
86. ORR Control Room, 3042
87. Reactor Operations Section Office, 7910

EXTERNAL DISTRIBUTION

88. Office of Assistant Manager for Energy Research and Development, DOE-ORO

89-90. Technical Information Center, Oak Ridge, TN 37830