MARTIN MARIETTA ENERGY SYSTEMS LIBRARIES
3 4456 0359035 3

ornl

ORNL/TM-8724

OAK RIDGE NATIONAL LABORATORY

MARTIN MARIETTA

Summary of Multiterminal High-Voltage Direct Current Transmission Technology

R. B. Biggs
W. T. Jewell

OAK RIDGE NATIONAL LABORATORY
CENTRAL RESEARCH LIBRARY
CIRCULATION SECTION
4500N ROOM 175
LIBRARY LOAN COPY
DO NOT TRANSFER TO ANOTHER PERSON
If you wish someone else to see this report, send in name with report and the library will arrange a loan.
UCN-7969 (3 9 77)

OPERATED BY
MARTIN MARIETTA ENERGY SYSTEMS, INC.
FOR THE UNITED STATES
DEPARTMENT OF ENERGY

Printed in the United States of America. Available from
National Technical Information Service
U.S. Department of Commerce
5285 Port Royal Road, Springfield, Virginia 22161
NTIS price codes—Printed Copy: A03; Microfiche A01

This report was prepared as an account of work sponsored by an agency of the United States Government. Neither the United States Government nor any agency thereof, nor any of their employees, makes any warranty, express or implied, or assumes any legal liability or responsibility for the accuracy, completeness, or usefulness of any information, apparatus, product, or process disclosed, or represents that its use would not infringe privately owned rights. Reference herein to any specific commercial product, process, or service by trade name, trademark, manufacturer, or otherwise, does not necessarily constitute or imply its endorsement, recommendation, or favoring by the United States Government or any agency thereof. The views and opinions of authors expressed herein do not necessarily state or reflect those of the United States Government or any agency thereof.

ORNL/TM-8724
Dist. Category UC-97a

Energy Division

SUMMARY OF MULTITERMINAL HIGH-VOLTAGE DIRECT CURRENT TRANSMISSION TECHNOLOGY

Richard B. Biggs
Ward T. Jewell*

*Oklahoma State University, Stillwater

Date Published—May 1984

Prepared by the
OAK RIDGE NATIONAL LABORATORY
Oak Ridge, Tennessee 37831
operated by
MARTIN MARIETTA ENERGY SYSTEMS, INC.
for the
U.S. DEPARTMENT OF ENERGY
under
Contract No. DE-AC05-84OR21400

MARTIN MARIETTA ENERGY SYSTEMS LIBRARIES
3 4456 0359035 3

CONTENTS

ABSTRACT v

1. INTRODUCTION 1

2. REASONS FOR DEVELOPING MT HVDC TRANSMISSION 2

3. HISTORY OF MT HVDC TRANSMISSION 4

4. SERIES-CONNECTED MT HVDC 5

5. PARALLEL-CONNECTED MT HVDC 7

6. DC CIRCUIT BREAKER 10
   - 6.1 PREVIOUS HVDC CIRCUIT BREAKER DEVELOPMENT 12
     - 6.1.1 Collaborative Research Working Groups 12
     - 6.1.2 Hughes Research Laboratory—Crossed-Field Tube Interrupter 13
     - 6.1.3 General Electric Company—HVDC Fault Current Interrupter 14
     - 6.1.4 Toshiba Corporation—HVDC Circuit Breaker 15
   - 6.2 PRESENT HVDC CIRCUIT BREAKER DEVELOPMENT 17

7. MT OPERATION WITH AND WITHOUT A DC BREAKER 18
   - 7.1 PREVIOUS RESEARCH INTO MT OPERATION WITHOUT A DC BREAKER 18
     - 7.1.1 1980—MT HVDC Power Systems 21
     - 7.1.2 1978—Simulator Study of MT HVDC System Performance 21
     - 7.1.3 1982—IREQ MT Simulator Studies 21
     - 7.1.4 1979—System Studies for HVDC Circuit Breakers 22
   - 7.2 PREVIOUS RESEARCH INTO MT OPERATION WITH A DC CIRCUIT BREAKER 23
     - 7.2.1 1979—System Studies for HVDC Circuit Breakers 23
     - 7.2.2 1980—MT HVDC Power Systems 24
     - 7.2.3 1982—A New Control Method for MT HVDC Transmission Without Fast Communication System 24

8. CONCLUSIONS 25

9. PROPOSED RESEARCH 26
   - 9.1 JUSTIFICATION 26
   - 9.2 SYSTEM STUDY 26
   - 9.3 ANALYSIS OF SERIES MT SYSTEMS 26
   - 9.4 HVDC CIRCUIT BREAKER STUDY 26

9.5 DC FAULT DETECTORS STUDY 27
9.6 DEVELOPMENT OF MT HVDC CONTROL ALGORITHMS 27

REFERENCES 29

APPENDIX—HVDC OPERATIONAL CONCEPTS 31

ABSTRACT

This report summarizes the present state of multiterminal (MT) high-voltage direct current (HVDC) power transmission. The purpose is to reassess the need for HVDC circuit breakers and to identify needed research for MT HVDC. The fundamentals of this technology are presented, and previous research and development is reviewed.

Although no MT HVDC systems have yet been built, many concepts have been proposed. Some require a dc breaker, and others do not. Both options have advantages and disadvantages for various applications, so the selection will depend on the proposed application. Research is needed to define operating characteristics of various MT HVDC systems. In some applications, dc breakers will be useful, so research into HVDC interruption should continue. Also, dc fault detection and control algorithms for MT systems should be studied.

1. INTRODUCTION

Since 1952, when the first modern high-voltage direct current (HVDC) transmission system began operating, more than 200 HVDC systems have been built and successfully operated.[1] These are all two-terminal systems which transmit power between only two points on the ac grid. Because these systems have been so successful, there is much interest in building HVDC systems with more than two terminals. These are known as multiterminal (MT) systems.

Work on MT systems has ranged from theoretical and simulation studies to development of components and actual design of MT systems. Results show that MT systems are feasible. Research and development is continuing, and MT systems may be built in the near future.

There is controversy, however, about the need in MT systems for a circuit breaker that can interrupt dc current. Some believe a breaker will be required to interrupt high-magnitude fault currents, and others think that only a load-current breaker will be needed. Still others feel that breakers will not be needed at all. This issue must be settled before any long-term plans about MT HVDC are made, because presently no breaker is available that can interrupt dc fault or load currents.

Development of a dc circuit breaker requires more than simply extending the technology of ac breakers. When any large current is interrupted by separating electrical contacts, a high-energy electrical arc may form through the insulating medium between the contacts. If this arc is not extinguished quickly, it can seriously damage the breaker. The arc is extinguished in an ac breaker when the instantaneous current magnitude is near zero, which occurs 120 times each second. The current in an HVDC system, however, remains constant, so the arc is always strong and thus very difficult to extinguish. A new type of circuit breaker is therefore needed for HVDC systems.

Development of a dc circuit breaker will require a large investment and will consequently increase the cost of any MT system that uses it. This cost can be avoided if an MT system can operate without breakers, and, because an HVDC system is quite controllable, this may be possible. Controls in a breakerless MT system would be used to reduce fault currents to low levels that could be interrupted with simple switches. There is no general agreement, however, on whether this plan is feasible.

This report will investigate MT operation with and without dc breakers and, in doing so, will summarize the present state and future needs of MT technology. The report begins by outlining the need for MT systems and the history of MT. The fundamental concepts of MT are reviewed in Sects. 4 and 5. Sections 6 and 7 present the results of previous MT research and dc breaker development. Finally, conclusions are made regarding the need for dc breakers and the future needs of MT (Sect. 8), and further research is proposed (Sect. 9).

2. REASONS FOR DEVELOPING MT HVDC TRANSMISSION

Before considering the development of MT systems, it is important to review the reasons why MT systems are needed. These reasons, both technical and economic, are presented in this section.

Most MT applications could be served by several two-terminal HVDC systems, and some even by conventional ac transmission. Figure 2.1 depicts an MT HVDC system and a two-terminal HVDC system. The MT diagram shows three points on an ac grid interconnected by an MT HVDC system. The two-terminal diagram shows how these same three points can be connected with three two-terminal systems. In many cases the MT system will have lower life cycle costs than the two-terminal systems. Depending on the application and the desired normal and emergency power flows, the MT system may require less installed terminal capacity, have lower losses in terminals and lines, and be able to use the overload capacity of the lines better than can a comparable set of two-terminal systems. Staged construction of an MT system can also increase the economic advantage over two-terminal HVDC.

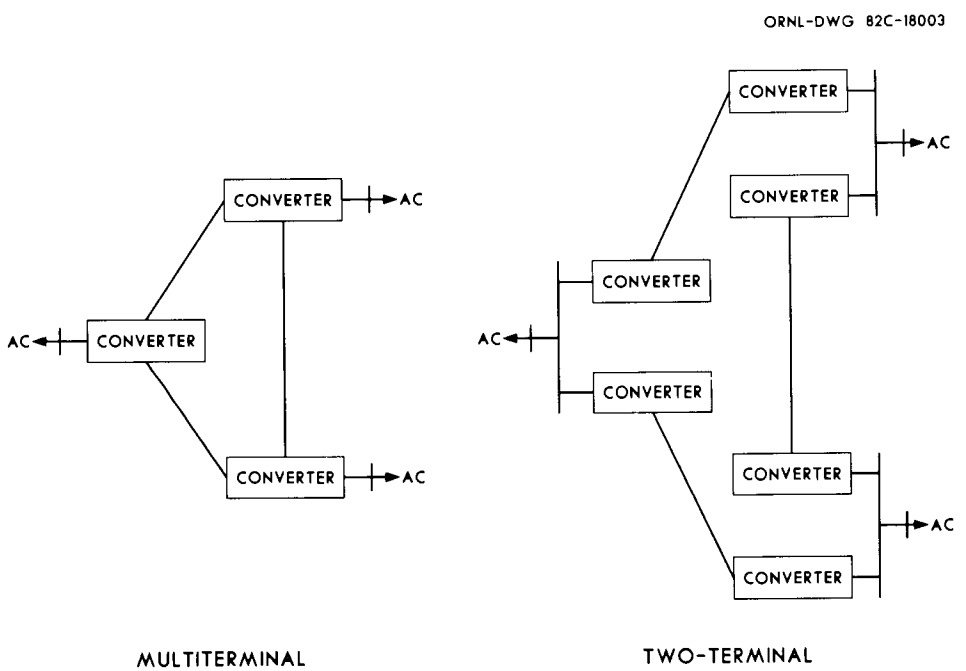

Fig. 2.1. HVDC systems: multiterminal and two-terminal.

MT HVDC has the following technical advantages over ac as a two-terminal HVDC:

- line losses are lower because there is no reactive power flow,
- power flow is much more controllable,
- stability of connected ac systems is increased,
- smaller conductors and transmission corridors are required,
- short-circuit currents are limited,
- terminal construction can be staged to coincide with load growth,
- no additional capacity is required for voltage support or stability,
- connection is asynchronous, so ac systems of different frequencies or systems with stability problems can be connected,
- there are no circulating power problems, and
- HVDC systems can continue operation with one line out of service.

All these advantages have been demonstrated in the operation of existing two-terminal HVDC systems. However, for equivalent MT and two-terminal systems, such as those in Fig. 2.1, the MT system should provide even greater benefits than the two-terminal systems.[2]

In the near future, MT systems will probably be long HVDC lines with relatively small intermediate taps. Someday, however, MT systems will be used whenever the advantages of HVDC are needed in a network system. The final decision among transmission types will depend on the specific application, and the MT system should often be an economical choice.

Although many now agree that MT systems will be economical, there has not always been agreement on this. Indeed, even the technical feasibility of MT systems was in question for many years. The next section will trace the development of the MT concept from its first proposal to its present acceptance.

3. HISTORY OF MT HVDC TRANSMISSION

During the early 1950s, in the early days of HVDC transmission, it was widely believed that HVDC circuit breakers would be needed for MT systems. Because the feasibility of such breakers was doubted, MT systems were not seriously considered. Experience with the first two-terminal HVDC systems, however, demonstrated the great controllability of HVDC systems, and by the early 1960s many believed that MT operation might be possible without a dc breaker.

In 1963 the first published proposal for an MT HVDC system described a parallel-connected MT system that would operate without circuit breakers.[3] Faults would be cleared and other control action accomplished using HVDC system controls and simple no-load isolating switches. The second MT proposal, published in 1965,[4] described a series-connected MT system that again needed no circuit breakers. These two papers[3,4] formed the basis for most subsequent MT research.

Many refinements have been introduced in both series and parallel MT systems since publication of these two initial papers. Although many people now agree that at least some MT systems could operate without dc breakers, progress has been made toward the development of breakers, and a working breaker may be available in the near future.

The questions about MT systems are no longer whether or not these systems can operate without breakers or whether the dc breaker is feasible. Instead, the advantages and disadvantages of breakers in various MT applications should be studied.

The refinements suggested for the original series and parallel MT designs have changed the basic concepts very little. These concepts are described in detail in the next two sections.

4. SERIES-CONNECTED MT HVDC

A simple series-connected MT system is shown in Fig. 4.1. The converters are typical HVDC converters connected in series to form a single loop transmission system. Current is constant throughout the system, and power flow is controlled by varying the dc voltage across each converter using conventional HVDC controls. Small changes in dc voltage are made by varying the converter firing angle, while large changes require the use of a load-tap-changing transformer on the converter ac side.

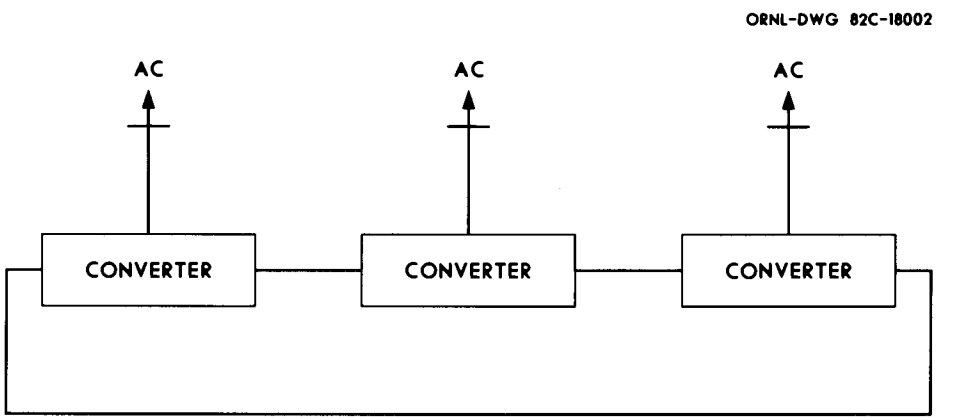

Fig. 4.1. Series-connected MT HVDC system.

Operation of a series MT system is much like that of a two-terminal system. Fast reversal of power flow, an action required for clearing faults on the dc lines, can be accomplished by firing angle control, so no reversing switches are needed. Because a converter is removed from service simply by short-circuiting its dc terminals, no circuit breakers are needed. Converters are, therefore, very easy to take in and out of service, which increases the system's reliability. The series MT system has very stable steady-state operating characteristics. It is also highly resistant to disturbances on the dc system.

There are, however, several drawbacks to the series MT system. Constant-current operation results in constant line losses, so losses are excessive at light loading. Operation over a wide dc voltage range necessitates either an expensive load-tap-changing transformer or converter operation over a wide firing angle range. Operation at large firing angles increases reactive power consumption and subjects the valves to large, fast changes in voltage. These changes increase the probability of converter faults and increase power losses in valve damping circuits.

Several methods have been proposed to reduce line losses in series MT systems. Line losses can be reduced when all stations are operating at low power by reducing the current throughout the system accordingly. For any power flow, in fact, the current level can be optimized to minimize losses. Unless power levels for each terminal are fairly constant, however, the MT system will still require a wide transformer load-tap or firing-angle range. Methods to further alleviate the line losses have been proposed, but these methods result in a significant increase in the cost of converters and related equipment.

Insulation coordination is also difficult with the series MT arrangement. Each ungrounded converter terminal in an HVDC system must be insulated from ground, and the converter transformer insulation must isolate the ac system from the dc system. Series connection allows grounding at only one point, and the ungrounded converter terminals are all at various high-voltage levels. For flexible operation, each converter and transformer must, therefore, be insulated for the highest possible voltage, even though much of the time the converters may have much more insulation than necessary. This insulation substantially increases converter costs. Metal oxide varistors have been suggested to alleviate insulation coordination problems, and recent advances indicate that these varistors may help make series MT transmission feasible.

Despite its drawbacks, the series MT system is well suited to certain applications. These applications include systems that will usually operate at full power and systems that have two main converter terminals with small intermediate taps between the main terminals. The series system should be seriously compared with the parallel system for these applications.

5. PARALLEL-CONNECTED MT HVDC

A parallel-connected MT system is depicted in Fig. 5.1. As in the series system, conventional HVDC converters are used, but, in the parallel system, each converter has one dc terminal grounded and the other connected in parallel to the other converters in the system. All converters operate at the same voltage, and the power flows are controlled by varying the current flows.

The problems of series MT HVDC are not encountered in the parallel system. Because current between terminals varies directly with power, line losses are automatically minimized. Insulation coordination is the same as for a two-terminal system, because each converter has one terminal grounded. Less insulation is needed, and the insulation required does not change with system loading. Parallel MT can be easily integrated with two-terminal or other parallel HVDC systems, and staged development is relatively simple.

Parallel MT systems do have some disadvantages, however. Reversing switches are needed for reversal of power flows; and, if fast reversal is needed, dc load-current breakers are required. Parallel MT systems are also very susceptible to disturbances on the dc line. For example, if commutation failure at one converter causes the dc voltage at that converter to drop significantly, the current from all other converters will flow to that point. Thus, it is important to adequately protect the converters against dc disturbances.

Within parallel MT HVDC, there are two possible system configurations. The radial system, shown in Fig. 5.2, is characterized by the existence of only one electrical path between any two converters. In contrast, the mesh connection (Fig. 5.3) has more than one electrical path between converters. This parallel path makes the mesh system more reliable than the radial system.

The parallel path in a mesh system also allows a line to be opened without any converter control action if the other lines have sufficient overload capacity to carry the load of the opened line. When the line is opened, load-flow simply redistributes on the remaining lines. Full power transmission can then continue. This action, however, requires a dc load-current breaker. The parallel paths in a mesh system also reduce line losses through load-flow optimization.

ORNL-DWG 82C-18001

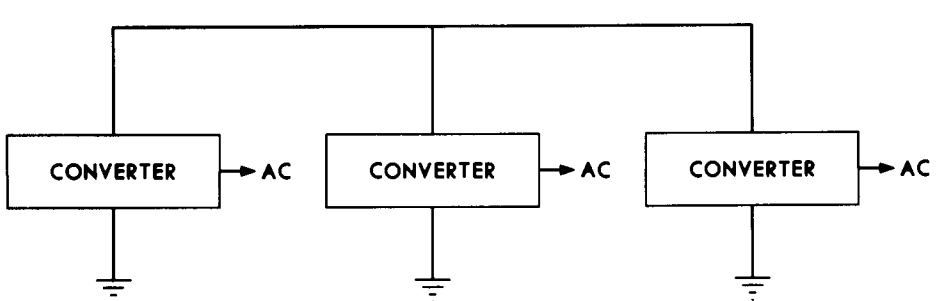

Fig. 5.1. Parallel-connected MT HVDC system.

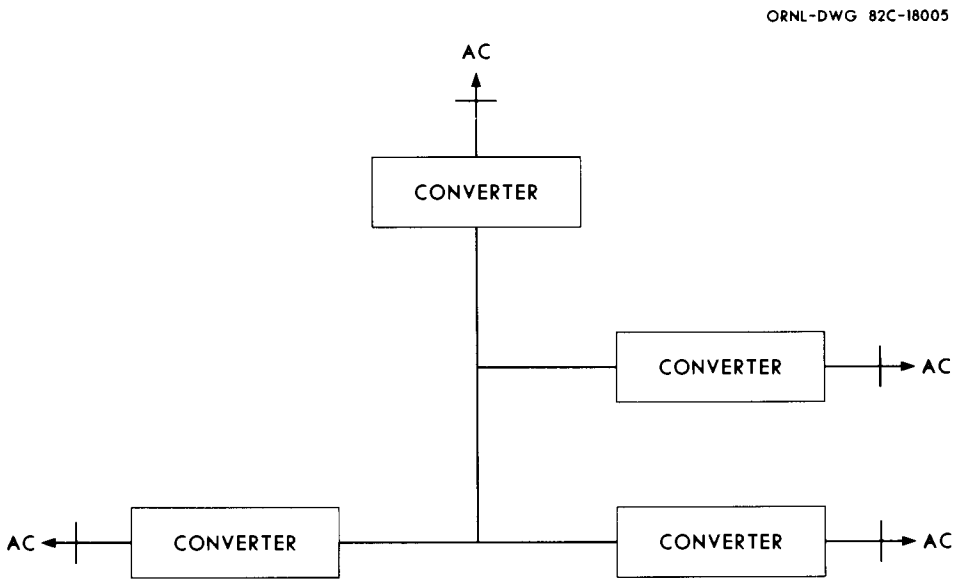

Fig. 5.2. Parallel-connected MT HVDC system, mesh configuration.

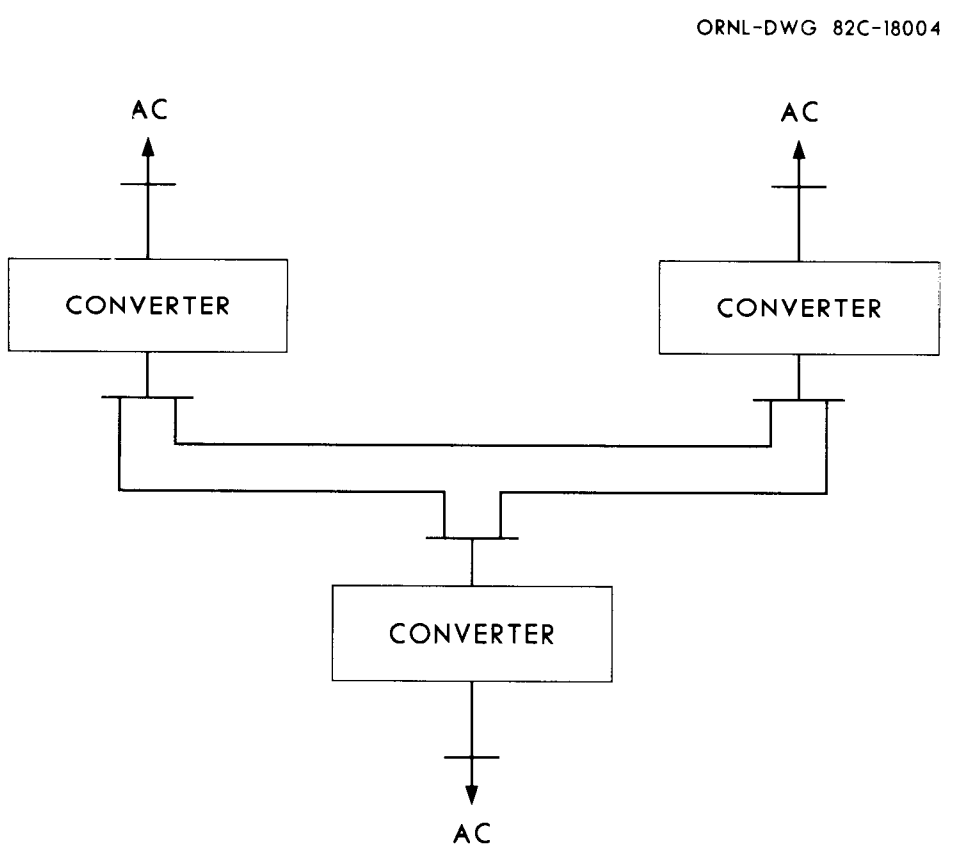

Fig. 5.3. Parallel-connected MT HVDC system, radial configuration.

In a radial system, a line can be opened by using system controls to reduce the line current to near zero and then disconnecting the line, so dc breakers are not needed. However, because no parallel path exists between converters in the radial system, it is not as reliable as the mesh system. An extra line would be needed for each line in a radial system to give the same reliability as a mesh system.

Besides reliability, there are several other factors in the comparison of radial and mesh parallel MT systems. These factors depend on the specific application and include the location of and distance between converter terminals and the anticipated power flows among terminals.

MT system designs will all be based on either mesh parallel, radial parallel, or series MT concepts. The remainder of this report will discuss research and design work on specific MT systems and components to be used in those systems.

6. DC CIRCUIT BREAKER

The fundamental task of a circuit breaker is to eliminate a current path by separating the interrupter contacts, which increases the impedance of the current path. As the contacts separate, a high-pressure plasma is produced. This plasma, which is called an arc, is primarily a body of highly ionized gas.[5] The conductivity of the plasma is temperature dependent;[6] and, as long as the power delivered into the arc exceeds or is balanced by the arc's power loss, the conductivity of the arc is maintained. To accomplish interruption, this balance must be upset to allow the plasma to cool. The cooling of the plasma reduces the conductivity, and the impedance of the current path is increased.

In an ac system, interruption is accomplished simply. As the current passes through zero, the energy input is momentarily zero. At this time the arc-quenching devices (forced air, SF_6, etc.) remove sufficient heat from the plasma to allow the impedance to increase. The impedance increases until the current flow is interrupted. In a power circuit breaker, it may take several cycles to obtain interruption, since the plasma has to be cooled considerably to quench the current flow.

The problem in interrupting dc is different. In dc applications, no current zero conditions exist to provide a zero energy level. Zero-current conditions must be created. There are three ways to accomplish this:

1. The traditional way to establish a current zero for low-voltage dc systems is to develop an arc voltage that is much higher than the system voltage.[7] This arc voltage tends to balance the current flow and forces the current to zero. The system energy dissipates in the circuit breaker in this method of interruption. The dissipated energy is a function of the arc voltage, current, system inductance, and interruption time. The energy is dissipated in the form of losses by conduction, convection, and radiation. In high-voltage applications, this method presents problems.

For the circuit breaker to absorb all the energy, the arc voltage must be much greater[8] than the system voltage if the energy is to be limited to a reasonable level. This can be seen from the equation

$$\text{Energy} = \frac{LI^2}{2} \times \frac{\text{arc voltage}}{\text{arc voltage} - \text{system voltage}} ,$$

where L is the system inductance and I is the current to be interrupted. From this equation, it is observed that, if the arc voltage is limited to 150% of the system voltage, the energy to be dissipated in the breaker is three times that stored in the system inductance ($LI^2/2$).

For rapid interruption and minimum energy dissipation, the arc voltage must be much greater than the system voltage. This situation is difficult to achieve at the higher system voltages. Also, an increase in arc voltage requires an increase in the insulation of the dc system. This requirement conflicts with the economic need to minimize line and equipment insulation. Consequently, this method has not been generally accepted as a means of HVDC interruption.

2. A second method to establish current zero takes advantage of the electrical relationship that may exist between an arc voltage and a parallel-connected capacitor. There are three basic ways of applying this method:

- One way takes advantage of the arc-circuit instability that exists between the arc and a permanent-connected parallel capacitor.[9] The arc and shunt capacitance interact, resulting in the instability of the interrupter circuit. This instability creates a current oscillation between the capacitor and the arc. A current zero will occur when the current output of the capacitor equals the dc arc current and is in the opposite direction.

- The application of a transverse magnetic field to the current flow in the circuit breaker to create a *rapidly rising arc voltage* is another means to provide a current zero.[10] The circuit interrupter is shunted with a capacitor that can commutate the breaker current. The rapid development of the arc voltage diverts the current into the capacitor, extinguishing the arc.

- The third way[11] creates arc instability by inserting a commutating capacitor in parallel with the arc. The capacitor is inserted by a controlled switch. The insertion of the capacitor results in a current oscillation between the arc and the capacitor. The oscillation produces current zeros. During this momentary energy unbalance in the interrupter, the arc rapidly cools. The arc cooling increases the arc impedance and results in a reduction of the current. An arc has a negative *V-I* characteristic, where a drop in current results in an increase in arc voltage. The arc voltage increase forces more current out of the breaker into the capacitor. The arc will then be extinguished. If the capacitor is sized such that the derivative of the voltage with respect to time (dV/dt where $I = c\ dV/dt$) is low enough, the interrupter arc will not restrike.

3. The third method of creating a current zero is to inject sufficient opposing current into the arc to *force* the current to zero. This method is used for applications where a breaker is used to interrupt fault current without assistance from convertor controls. The injected current is provided by a precharged capacitor and can provide current zero in a few milliseconds.

When current interruption occurs in the dc breaker, the magnetic energy stored in the system must be absorbed. The dc breaker does not have the advantage of an ac breaker. In the ac circuit, when the current cycles through zero and interruption occurs, the magnetically stored energy in the system is zero. However, this energy is present in a dc system and must be dissipated during interruption.

The inductance of a long transmission line and of the smoothing reactors installed at the converter stations is large and requires very high energy dissipation in the breaker. For this reason, dc circuit breakers are designed such that the interruption operation and the energy absorption operation are accomplished by separate components. Zinc oxide nonlinear resistors are used to dissipate the energy. These resistors, with their nonlinear *V-I* relationship, not only absorb the energy but also limit the recovery voltage across the breaker.

At present, no HVDC circuit breakers are in service. Metallic return transfer breakers are installed on the Cooperative Power/United Power and Square Butte systems between Minnesota and North Dakota and on the Pacific Intertie[10] system between Oregon and southern California. These breakers are not subjected to the voltages a normal HVDC circuit breaker would experience since the current flow is diverted from the breaker to the metallic return. Diverting the current creates a very modest recovery voltage, so the metallic return transfer breakers are not true HVDC breakers. However, these breakers operate satisfactorily and confirm that the concept of using a dc circuit breaker is practical. Several organizations worldwide are working to develop methods of interrupting HVDC.

6.1 PREVIOUS HVDC CIRCUIT BREAKER DEVELOPMENT

There have been several attempts to develop HVDC circuit breakers. Some of them are described in this section.

6.1.1 Collaborative Research Working Groups

In 1970, a consortium composed of AEG-Telefunken, ASEA, BBC, and Siemens AG developed a concept[7] for an HVDC circuit breaker. This concept is shown in Fig. 6.1. The concept, which relies on obtaining momentary unbalance in the arc, is accomplished by inserting a commutating capacitor in parallel with the arc and then rapidly cooling the arc to form a very high arc voltage. The capacitor is inserted when the arc voltage reaches a prescribed level.

It was originally thought that the high arc voltage would be obtained by intensively cooling the arc with a rapid transverse oil stream. That concept is being modified by some consortium members, who are now considering the use of forced air for cooling. When the arc voltage reaches sufficient magnitude to trigger the spark gap *Gc* (Fig. 6.1), the current begins to flow into the capacitor *C*. The diversion of current from the arc disturbs the energy balance of the arc and allows deionization in the breaker as the arc cools.

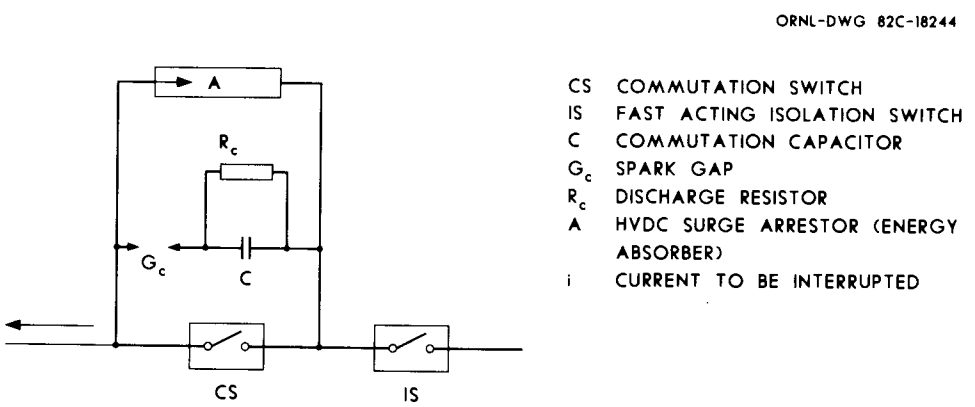

Fig. 6.1. European dc interrupter concept.

The magnitude of the dc through the capacitor shapes the recovery voltage for the breaker. The capacitor is sized to limit the derivative of the voltage with respect to time (dV/dt) of the circuit breaker and to facilitate rapid commutation of current from the breaker. The magnitude of the recovery voltage is limited by the surge arrestor A. The arrestor is now envisioned to be a zinc oxide resistor. The resistor holds the recovery voltage constant over a wide range of current, and this voltage opposes the system voltage. The resistor both absorbs the energy and reduces the current flowing in the system. After the current has been reduced to near zero, the isolation switch IS is opened. This switch must withstand only the system voltage since it is not required to interrupt any significant current.

Laboratory testing of this concept has shown the following:[11]

- The breaker successfully interrupted 2350 A with one interrupting unit, and the recovery voltage was limited to 120 kV. With a simulated system inductance of 1.9 H, the maximum time from contact separation until zero current was 85 ms. The total energy absorbed by the interrupter module was 7.1 MW, of which 0.3 MW was dissipated in the breaker itself.
- Tests at 0.7 H inductance, with two interrupting units in series, confirmed the feasibility of the modular approach. A current of 2430 A was interrupted, with the contacts of both interrupting units opening simultaneously. Out of the 3 MW of energy absorbed, the first breaker module absorbed 1.7 MW, while the other one absorbed the balance. The time from contact separation until zero current was 41.5 ms.

6.1.2 Hughes Research Laboratory—Crossed-Field Tube Interrupter

Hughes Research Laboratory, under an Electric Power Research Institute contract, developed a prototype HVDC circuit breaker.[12,13] The basis of the interrupting scheme is a crossed-field tube,[14,15] which changes from a conductive state to an insulating state when the magnetic field is removed. Figure 6.2 is a conceptual diagram of the design. The in-line device, ID, is a fast-opening mechanical switch that carries the continuous current. When an interruption is required, the ID quickly opens (1.5 ms) and transfers the current to the crossed-field tube, T_1. This tube carries current long enough to allow deionization of ID (2 ms). T_1 then interrupts and transfers the current into the resistor (R). The nonlinear resistor, which is a zinc oxide varistor, begins to conduct when the recovery voltage reaches sufficient magnitude, ~1.7 times the system voltage. This voltage is in opposition to the system voltage, and the current decreases. T_2 then interrupts and diverts the current into C_2, where the remaining energy is absorbed.

Field tests[12] were conducted on the breaker when it was temporarily installed on the Celilo section of the Pacific Intertie. The following observations were made from the tests:

- While the system was operating at 60 kV and 330 A, a fault 402 km (250 miles) from the breaker was initiated. The current increased to 620 A in 10 ms and was limited by operation of the circuit breaker. The total time from fault initiation to zero current was ~59 ms. The current was commutated out of the interrupter tube in <2 ms, limiting the energy dissipated in the arc. The fault current level had dropped to 100 A after 25 ms, and this rapid rate of current decrease limited the energy dissipation in the nonlinear resistor to 805 kJ.

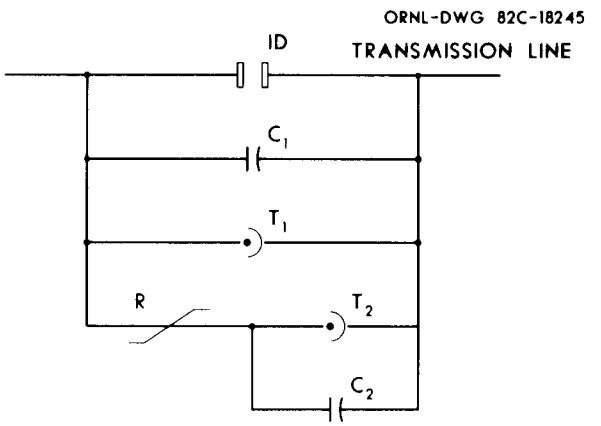

Fig. 6.2. Hughes sequential circuit breaker concept.

- A second test with the same conditions, 60 kV and 330 A, resulted in an interrupter failure. The failure resulted when the cross field interrupter T_2 (Fig. 6.2) failed to conduct, thus creating an overvoltage across the breaker. This resulted in a busing and capacitor failure. Hughes Laboratory believes that moisture caused the failure.
- With the system operating at 60 kV and 350 A, a fault close to the circuit breaker was initiated. The fault current increased to 940 A in 9 ms, and the interruption process began to reduce the current. Within 25 ms of fault initiation the current was reduced to <100 A. This rate required absorption of only 678 kJ of energy in the nonlinear resistor. The current was zero 52 ms after the fault was applied.

6.1.3 General Electric Company—HVDC Fault Current Interrupter

The General Electric Company, under a Department of Energy contract, developed a conceptual design[16] for a 400-kV, 10-kA interrupting breaker capable of carrying 2 kA continuously. This project, based on previous work by Greenwood and Lee,[17] investigated the possibility of developing a dc breaker that would act quickly and be independent of converter terminal control action. The scheme, shown in Fig. 6.3, is based on current interruption by injecting a countercurrent into the interrupters, thus creating a current zero. The fault current is then transferred to a nonlinear resistor that absorbs the energy of the system.

The snubber capacitors reduce the rate of recovery voltage rise, while the sharing capacitors distribute the transient voltage evenly across the breaker modules. The commutation capacitor is precharged to provide the voltage for the countercurrent. The commutation reactance results in the surge impedance necessary to achieve the desired countercurrent.

Several tests were performed for this concept, with the following observations:

- 10,000 A was commutated out of the breaker and into the current-limiting nonlinear resistor 5 ms after the breaker trip signal was received.
- The commutation capacitor is best charged by using dedicated power supplies.

ORNL-DWG 82C-18247R

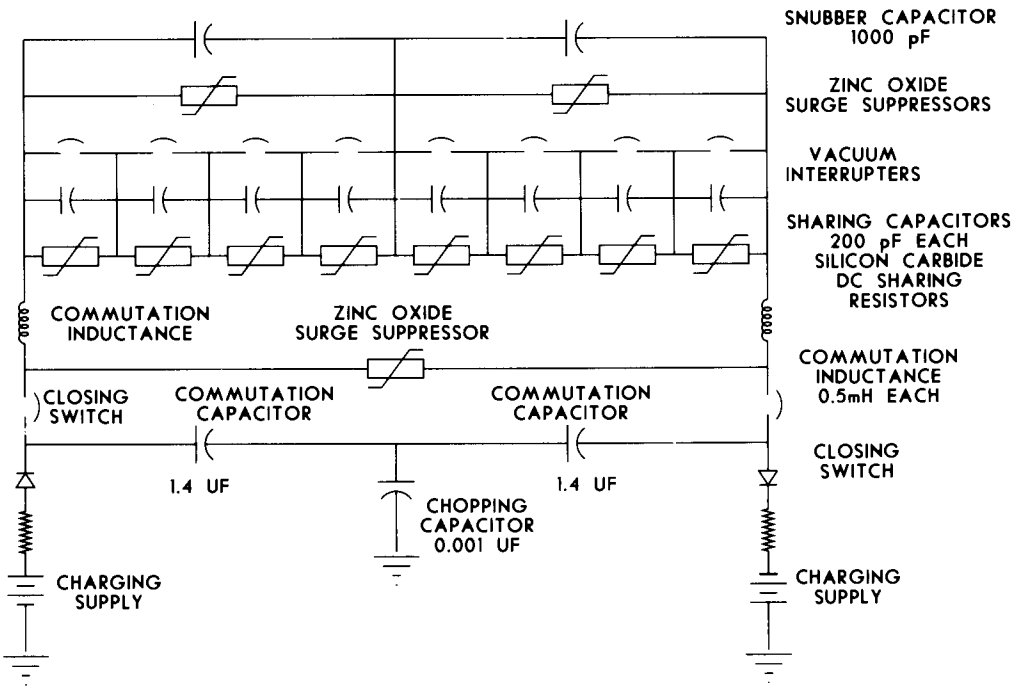

Fig. 6.3. General Electric dc interrupter concept.

- Two breaker modules in series were tested to investigate the sharing of the recovery voltage by the two vacuum switches. In some cases, both breakers did not simultaneously interrupt, thus requiring one breaker to withstand the entire recovery voltage. Based on the test data, a statistical model was developed to predict the behavior of eight modules in series. The results from this investigation were not conclusive, and the authors recommended additional testing of an eight-module series arrangement.
- The sharing of the recovery voltage for the modules appeared to be a function of the dI/dt. As dI/dt was decreased, the sharing improved.
- dI/dt had a greater effect than dV/dt on the interruption failures. Interruptions were more successfully accomplished at lower rates of dI/dt.
- The nonlinear resistors (zinc oxide) were operated successfully in parallel.

6.1.4 Toshiba Corporation—HVDC Circuit Breaker

The Toshiba Corporation of Kawasaki, Japan, manufactured and tested an HVDC circuit breaker rated at 250 kV, 3500 A continuous current.[18] The schematic of the concept is shown in Fig. 6.4. In this design, Toshiba emphasized energy absorption and reliable interruption.

ORNL-DWG 82C-18249

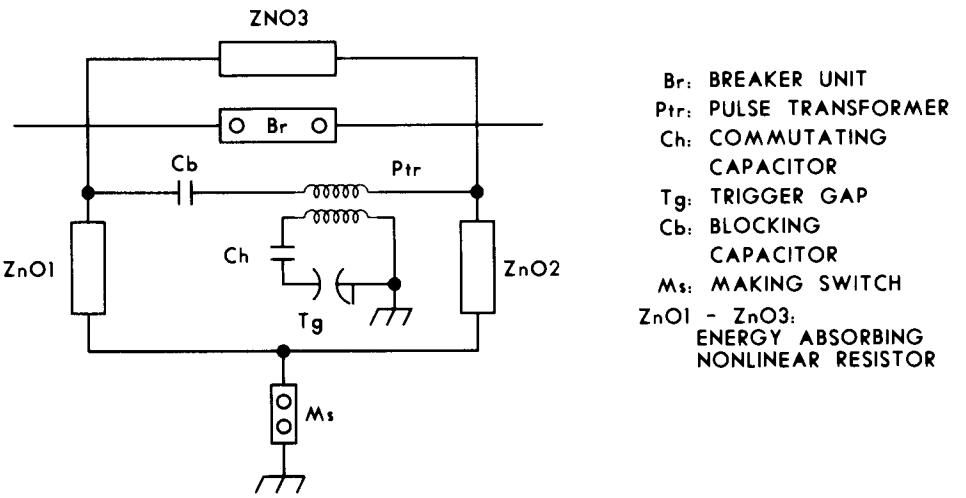

Fig. 6.4. Toshiba interrupter concept.

The design accomplishes current zero by the following method: (1) Upon fault sensing, the breaker, *Br*, opens and produces an arc voltage. (2) At the same time, switch *Ms* and the arc activated switch *Tg* close, energizing the oscillating circuit. From this circuit an oscillating current is injected into the breaker. This oscillatory current results in a current zero in the interrupter. (3) The recovery voltage, limited by the nonlinear resistors, opposes the system voltage and forces the system current to zero.

In this design the commutation capacitor is on the low-voltage side and is always being charged.

The unit was tested with a system voltage of 250 kV and a dI/dt and dV/dt of 150 to 180 A/μs and 4 kV/μs respectively. The test results were as follows:

- With a recovery voltage of 340 kV and with *Br* consisting of an SF_6 interrupter in series with a vacuum interrupter, 3500 A was successfully interrupted in every test.
- With a recovery voltage of 340 kV and with *Br* consisting of *three vacuum interrupters* in series, 3500 A was successfully interrupted in 80% of the tests. The failures resulted from reignitions caused by the high dI/dt in the interrupter.
- The individual characteristics of the SF_6 and vacuum interrupter in series seem to help each other, since the dI/dt of an SF_6 interrupter is lower than that in a vacuum interrupter.
- An attempt to measure the voltage sharing of the SF_6-vacuum series configuration was unsuccessful because of induced noise. The authors consider this test important and a subject for future investigation.
- Interrupting time was not investigated. However, the authors recommend an interrupting time of ~30 ms, because this time would provide sufficient advantage over the interrupting time of an ac circuit breaker.

6.2 PRESENT HVDC CIRCUIT BREAKER DEVELOPMENT

In 1980, the Electric Power Research Institute and Bonneville Power Administration, in conjunction with the Division of Electric Energy Systems of the Department of Energy, submitted a Request for Proposal for the development of an HVDC circuit breaker. The breaker was to be modular in construction and rated in the ±200- to ±600-kV range. The maximum current-interrupting capability was to be 3000 A, and the current was to be commutated out of the circuit breaker contacts within 25 ms.

The proposal was later modified to seek only a proof of principle of an interrupter concept capable of meeting the interruption requirements. At the end of this program, the most promising concept was to be chosen for development and eventual testing on the Pacific Intertie system. The Westinghouse Electric Corporation and the Brown Boveri Corporation proposals were selected for the proof of concept study.

The concepts were based on the assumption that the dc converter terminals would control the fault current to 2500 A or less. All components used for the breaker module were to be standard commercial items.

The proof of concept study has been performed and evaluated. Both the Westinghouse Electric Corporation and the Brown Boveri Corporation were awarded a contract to develop a circuit breaker. The circuit breakers were developed and were temporarily installed for extensive testing on the Pacific Intertie in February 1984.

7. MT OPERATION WITH AND WITHOUT A DC BREAKER

MT HVDC systems have not been seriously considered in network planning because of the unavailability of HVDC circuit breakers. MT operation without a dc breaker has been considered unacceptable. In recent years, however, some system planners and designers have accepted some designs that do not include a circuit breaker. In these designs the dc fault is removed by controlling the convertors to reduce the dc current to zero. In this concept the total power flow of the system is interrupted for several milliseconds, but its proponents indicate that the disadvantages of the dc breaker (e.g., cost, unreliability, system stability effects, and operating time) overshadow the problem of protracted power interruption.

A large number of HVDC designers believe that a dc breaker is necessary for most MT systems. They consider it imperative to quickly isolate a faulted line segment so that the transmission system will remain stable and reliable. The dc system can be operated similarly to an ac system if a dc breaker is installed.

Some designers have attempted to develop sophisticated control schemes that will provide safe and reliable system operation without a dc breaker, while other designers feel that an HVDC breaker is required regardless of the control scheme used.

7.1 PREVIOUS RESEARCH INTO MT OPERATION WITHOUT A DC CIRCUIT BREAKER

In a two-terminal HVDC system, a dc circuit breaker is not required. When a dc fault occurs, the rectifier and inverter will, by control action, reduce their voltages until fault current is reduced to ~0.15 times rated current. The current is limited to this reduced level for a short time to allow for deionization at the fault. The system is then returned to its prefault current level. While this automatic action of the control system limits the fault current to a low value, it does not guarantee arc extinction. To assure arc extinction,[19] the fault current and the recovery voltage must be brought to zero. The normal control action during the fault is usually enhanced by quickly driving the rectifier into the inversion mode of operation. Operation in this mode results in zero fault current. The recovery voltage across the arc is negligible, and restrikes are eliminated.

Fault clearing by this method requires either voltage-derivative or voltage-level fault detectors for proper operation. The voltage-derivative unit is used to sense the rate of decrease of the rectifier voltage and responds when the rate exceeds a preset value and the voltage level goes below a preset value. This unit operates in ~3 ms. The voltage-level unit responds after ~50 ms to a predetermined dc voltage. This unit will operate if the rate of dc line voltage reduction is slow, as is the case for a high-resistance dc line fault.

Figure 7.1 shows the system configuration for a typical MT system. Operation of this system, with a dc line fault applied, is shown in Fig. 7.2. The analog simulation of the system was performed by Hydro Quebec, Institut de Recherche d'Hydro Quebec (IREQ). The explanation of the sequence of events is as follows:

1. When a dc fault is applied at time *A* to either rectifier, the currents at both rectifiers increase to values limited by the inductance of the dc reactor, the gain and time constant of the current regulator, the distance of the fault from the rectifier, the waveform of the direct voltage, and the instant on this wave that the fault occurs.

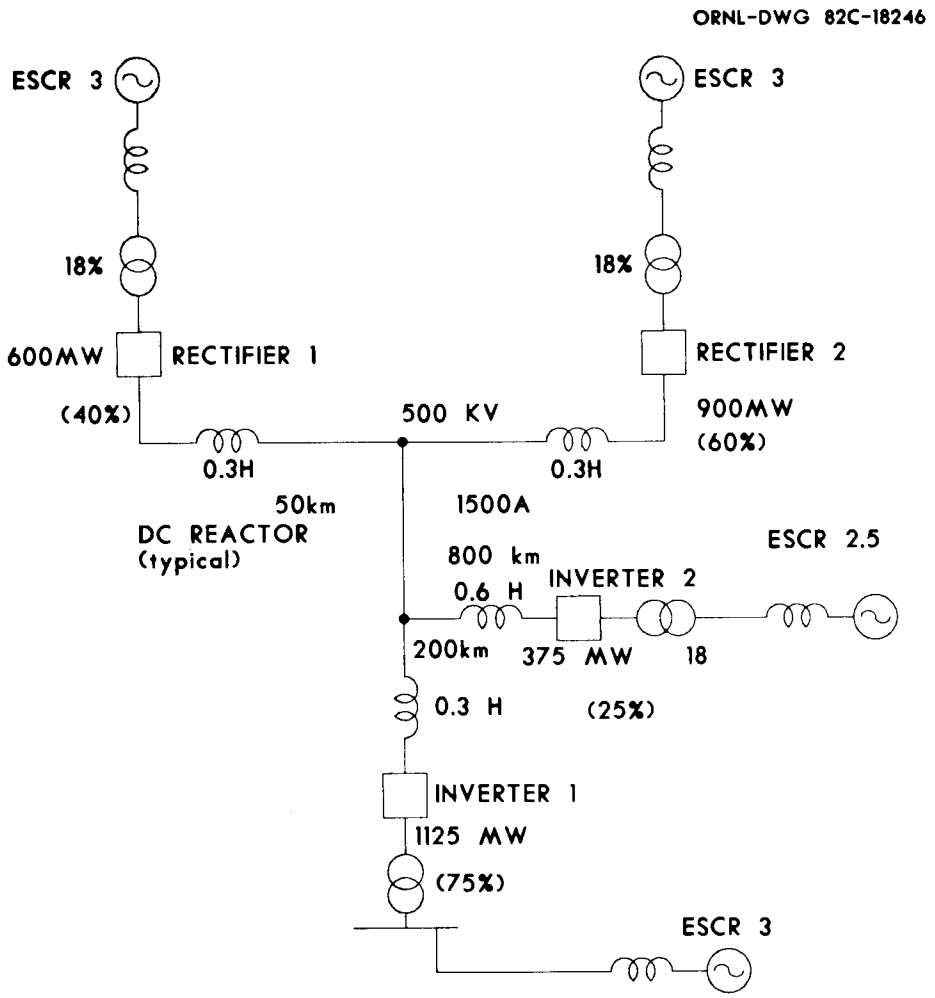

Fig. 7.1. Typical MT HVDC system for simulation.

In attempting to control the rectifier current to its set value, the current regulator lowers the rectifier voltage. The rectifier voltage is a function of cos α, where α is the ignition angle of the thyristors. Therefore, as the angle α is *increased*, the rectifier voltage is *decreased*. This occurs from time A to time D. The rectifier is taken into inversion, and the rectifier current begins to decrease.

The dc line fault has resulted in a decrease of current at inverters 1 and 2. The inverter current is a function of the difference between the rectifier voltage and the inverter voltage. The inverter voltage is decreased to increase the inverter current. The inverter voltage is a function of the cosine (180° − α), where α is the ignition angle. As the ignition angle decreases, the inverter voltage also decreases. As seen in Fig. 7.2, interval A–B, the ignition angle of the inverter began to decrease when the fault was detected.

2. The control system decreases the rectifier voltage until the rectifier current is at the required set point. During the fault, time A to C, there is no current at the inverter, and the current regulator will continue to reduce the inverter voltage. If no other control action is taken, the control system will force the inverter into rectification, by decreasing its ignition

ORNL–DWG 82-18248

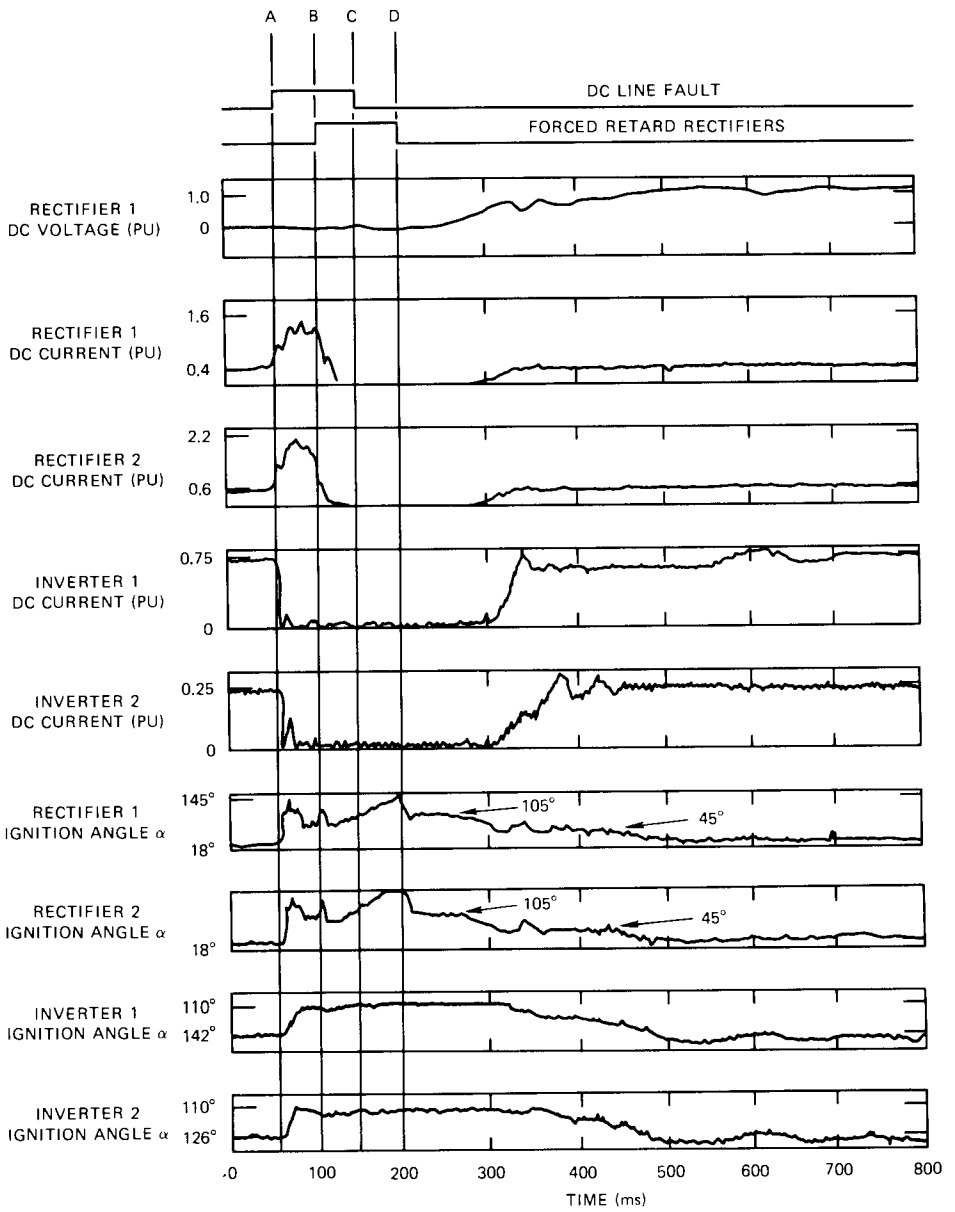

Fig. 7.2. MT operation with dc line fault at rectifier end.

angle, to satisfy the current level requirements. The attempt to force the inverter into rectification is shown in Fig. 7.2, interval A–B. During this interval, the rectifier current is reduced, and the inverter ignition angles approach the rectifier mode of operation.

In this simulation, the control system does not allow the inverter to go into rectification. When the fault is detected, a special control program overrides the normal control functions. The inverters remain in the inversion mode, and the rectifiers are forced into inversion. With both units in inversion the line energy is returned to the ac system, and deionization occurs at the fault. Interval B–D of Fig. 7.2 shows the rectifiers being forced into inversion.

There is some question as to whether or not this technique can be applied to every MT operation using a low-current, high-speed disconnect to isolate the line for permanent dc faults. Some studies have been conducted to determine if this method of operation is feasible. A few of these studies are discussed in this paper.

These studies are system-dependent, and all data should be evaluated accordingly.

7.1.1 1980—MT HVDC Power Systems

In 1980, John Reeve published a paper that presented an overview of 71 papers written on MT HVDC systems.[20] These papers described studies of MT systems using both dc circuit breakers and convertor controls. Reeve drew the following conclusions regarding controls:

- A *central controller* is necessary to coordinate the current or power settings of the dc convertors. When a dc fault occurs, this controller will reestablish current settings for each convertor. Closed-loop control can be incorporated, and the loss of the controller will automatically result in transfer of the control functions to manual operation.
- The control schemes based on established two-terminal practice, both with and without fault detectors, will result in stable operation under normal and fault conditions. However, a very *reliable communication link* is necessary to coordinate the settings of the dc system voltage and current levels.
- If fault detectors were not used and the current was reduced to a low level by the normal control procedure, the time from fault initiation to full power restoration was *200 to 250 ms.*
- If fault detectors were used and the rectifier was forced into inversion, the fault clearing time was ~180 ms.

7.1.2 1978—Simulator Study of MT HVDC System Performance

Lars Bergstrom of ASEA published a paper in 1978 describing the simulated performance of a 3- and 4-terminal MT HVDC system.[21] He drew the following conclusions on the use of controls for clearing a dc fault condition:

- The conventional dc line fault protection, developed for the two-terminal case, may also be applied to the MT system.
- The *desirability* of using controls for fault clearing may be diminished by the fact that this method temporarily results in an outage to the entire dc system (even the unfaulted lines).
- The system recovery time from a dc line fault, using voltage-derivative sensing, is 200 ms. If voltage-level sensing is used, the recovery time is 230 ms.

7.1.3 1982—IREQ MT Simulator Studies

In 1982, the Institute de Recherche d'Hydro Quebec (IREQ) performed analog simulator studies on an HVDC system (see Figs. 7.1 and 7.2). The following observations were made:

- The time for restoration of full power was 300 ms after a dc line fault occurred at one of the rectifiers. This time period included 50 ms for fault detection and communication to the controller.

- A commutation failure at the smaller-sized inverter (inverter 2) resulted in a 200-ms recovery time; but when the inverter 2 smoothing reactor was reduced to the size of the reactor for inverter 1, the system *could not recover* from the commutation failure. The failure to recover occurred because the smaller-rated inverter received excessive direct current, which did not allow the inverter to recover. A shutdown of the dc system for a significant time was required before the system could be returned to the prefault condition.

7.1.4 1979—System Studies for HVDC Circuit Breakers

In 1979, the Electric Power Research Institute released a report which explained the use of the controls or dc circuit breakers for fault protection on MT dc systems.[22] A parallel-tapped system and a ring system were examined. Two configurations of the parallel-tapped system were presented. The first configuration consisted of two inverters. One inverter was rated for 20% of the rectifier output power, and the other inverter was rated for 80% of the power. The other configuration consisted of two inverters, each rated at 50% of the rectifier output power. The following conclusions were included in the report:

Parallel Tap

Equally Rated Inverters

1. Fault current levels and system recovery times using two-terminal *conventional* control concepts were similar to those expected in an equivalent two-terminal system.
2. The system recovery time, when voltage-derivative sensing and two-terminal conventional controls were used, was 200 ms for a dc line fault.
3. Operating the dc system in a weak ac system did not adversely affect the operation of the *conventional controls.*

Unequally Rated Inverters

1. The recovery time, when voltage-derivative sensing and conventional controls were used, was 200 ms for a dc pole fault applied at the smaller-rated inverter.
2. When the inverters are of unequal capacity, the smaller inverter must be operated in the current control mode in order to protect it from overcurrent. Operation of this type will enable the smaller inverter to reduce its current setting prior to the reduction of current in the larger inverter. If the dc controls are not adjusted for this control mode, then, when a dc fault occurs, the smaller inverter will momentarily receive the total system current, and commutation failure will result.
3. If a commutation failure occurs at the 20% tapped inverter, 250 ms are required to clear the fault and restore the system power to the prefault level.

Ring System

System disturbances resulting from inverter commutation failures or ac faults can be adequately managed by two-terminal conventional control concepts.

7.2 PREVIOUS RESEARCH INTO MT OPERATION WITH A DC CIRCUIT BREAKER

Some designers feel that the use of a dc circuit breaker adds little value to the system and may indeed add problems. They contend that if the breaker interrupts the fault current (~1.6 to 2.2 per unit of rated current per rectifier) and suddenly disconnects one inverter in a system designed with two inverters, the remaining inverter will receive the total system current. This additional current may result in the operation of the overcurrent protection in the inverter, causing the dc line to be temporarily inoperable.

The proponents of the use of a dc circuit breaker contend that, without a circuit breaker, the entire system must be momentarily shut down to allow the faulted line to recover. They argue that the use of a circuit breaker will allow the faulted section of the system to be disconnected from the system without affecting power delivery in the unfaulted sections.

The requirements for the dc circuit breaker, if needed, are not clear. Generally, dc circuit breakers are classified as follows:

1. *A circuit breaker capable of interrupting the maximum dc fault current.* This breaker must operate quickly (10 to 30 ms) since the minimum energy to be dissipated by the breaker is $\frac{1}{2} LI^2$, and I can increase at a rate of 1000 A/ms.[17] This breaker is often called a fault current breaker.

2. *A breaker capable of interrupting the dc fault current only after the convertor controls have reduced the current to normal load current.* This breaker is called a load break interrupter. The interruption time required for this type of breaker is 25 to 35 ms.

3. *A third type of interrupter is often classified as a breaker but is only a disconnect switch.* It is capable of operating only after the current has been reduced to zero. The disconnect switch operates in a few milliseconds and is appropriately called a high-speed disconnect.

7.2.1 System Studies for HVDC Circuit Breakers

Several studies have been performed to determine the improvement in system performance which can be gained by the use of dc circuit breakers. Again, it should be noted that the results of these studies are system dependent.

In ref. 22, the performance of a simulated dc system with a fast-acting fault current interrupter was examined. The following observations were made:

- In a parallel-tapped MT system with equally rated inverters, the time from fault initiation to full restoration of power was 200 ms. This time was identical to that found without using a dc circuit breaker and using conventional control techniques. However, the *time to interrupt power to the unfaulted inverter* was only 70 ms when the circuit breaker was used, as compared to 200 ms if the circuit breaker was not used. In this system, the time difference resulted in an additional 52 MW of power available for transmission.

- In a system where unequally rated inverters were used, a fault at the higher-rated inverter resulted in excessive current surges at the small tap. Time-consuming control operations for voltage and current adjustments were necessary to prevent the current

surges. The additional control time requirement reduced the advantage of a dc breaker, and the interruption of current at this fault location is better performed by conventional control practices and a high-speed, low-current disconnect.

- The system recovery time was 100 ms, with a commutation failure at the 20% tapped inverter, and a circuit breaker was used to interrupt the fault. The recovery time without the breaker was 250 ms.
- For a dc ring bus system configuration, the dc breaker restored system power in 100 ms after a dc line fault. This compares to a typical restoration time of 210 ms when the system was operated without a dc breaker installed.[19]

7.2.2 MT HVDC Power Systems

In John Reeves' 1980 paper,[20] he offered several conclusions concerning the use of dc circuit breakers on MT HVDC power systems.

- The use of a circuit breaker with full fault current interrupting capability allows the system to recover from a dc line fault in 100 to 160 ms.
- The use of a circuit breaker with only load current interrupting capability allows the system to recover from a dc line fault in 160 to 175 ms.

7.2.3 A New Control Method for MT HVDC Transmission Without Fast Communication System

Sakurai et al. presented a paper in 1982 describing a new control method for an MT HVDC transmission system.[23] The authors presented the results of a simulation to determine the advantage of using a dc circuit breaker in a radial HVDC system. They proposed a new control scheme that does not require the use of a central controller to reset voltage and current operating levels. A primary advantage of this control scheme is that there is no time delay due to this resetting, and a dc circuit breaker can clear an inverter fault and restore full power to the system.

For a dc line fault at one of the rectifiers, the power flow was interrupted for only 40 ms. The unfaulted rectifier was at the prefault current level 100 ms after fault initiation.

8. CONCLUSIONS

The referenced studies in this report are only a portion of the studies that have been conducted on the subject. From the referenced studies the following conclusions are made:

- It appears that each proposed MT HVDC power system must be evaluated to determine if a dc circuit breaker is required. The factors that will affect this decision are the structures of the dc and ac systems, the purpose of the system, and the operational requirements of the system.
- In general, the present choice for fault protection is the load break interrupter rather than the fault current interrupter. The reasons for this choice are as follows:
  1. There are reliability problems in using the fault current interrupters.
  2. The fault current interrupter operates only slightly faster than the load break interrupter (~15 and 45 ms, respectively) but must dissipate four times the energy. Before the fault current interrupter can operate, the current settings for the inverters must be reset. The action of resetting takes some finite time and may negate the operating time advantage of the fault interrupter.
- HVDC circuit breakers that are more compact and less costly than those presently being developed may be needed for future MT systems. This need would certainly be true in a compact gas-insulated HVDC substation where space is limited.
- Additional development of control algorithms for operation of MT HVDC systems without breakers is needed. Existing control algorithms for this type of operation are primarily adaptations of two-terminal HVDC control algorithms.

9. PROPOSED RESEARCH

9.1 JUSTIFICATION

As HVDC has developed, an increasing number of utility planning engineers are recognizing its economic and technical advantages for long-distance transmission, underwater and underground cables, and asynchronous ties. Inevitably, MT networks of increasing size and complexity will be constructed, requiring efficient control schemes and, in some cases, affordable, highly reliable dc circuit breakers. The networks may be either series or parallel configurations of the radial or mesh types.

A considerable amount of research and development has been performed in MT work, but much work remains before the systems can be reliably used. A research program is proposed to address those areas that appear most in need.

9.2 SYSTEM STUDY

Previous studies have provided beneficial information for determining the need or advantages of using a dc breaker in MT designs. There is still a need to determine the interaction of an ac system with an MT dc system with and without a dc circuit breaker.

A representative system design study should be performed. Both weak (high impedance) and strong ac systems, with the dc configurations consisting of equal and unequal tapped inverters, should be conceptually designed and studied.

The study should investigate the effect of interrupter speed on ac system stability. The effect of the presence or absence of a dc breaker on stability should be evaluated. Control strategies necessary for stable operation should be included. The development of a methodology that industry can use in system planning should be a part of the proposed work.

9.3 ANALYSIS OF SERIES MT SYSTEMS

With the emergence of zinc oxide varistors, the insulation coordination problems in a series MT network may be reduced. The series configuration may, in some instances, be more attractive than the parallel network, especially since the series configuration has much less need for a dc circuit breaker than does a parallel network.

In 1975, IREQ performed an analysis of a series dc network,[24] but the analysis did not include zinc oxide varistors in the insulation protection scheme. The proposed work would augment that work by including the zinc oxide varistors. The analysis would be performed using analog and digital simulation.

The studies should be designed so that the results of the work can be used to determine trade-offs that exist for series and parallel systems.

9.4 HVDC CIRCUIT BREAKER STUDY

Although dc circuit breakers were developed for Bonneville Power Administration, the Department of Energy, and the Electric Power Research Institute for temporary installation and testing on the Pacific Intertie in February 1984, there are reasons to continue the investigation of dc interruption techniques. The breakers developed require a large and

expensive capacitor bank that requires a large amount of space. The breaker is also expensive and may be unacceptable to other possible users.

A study to look for innovative interruption concepts that offer significant economic and technical advancements over the present concepts is proposed. Current, voltage, dI/dt, dV/dt, and thermal conditions during and immediately following interruption should be investigated. The conclusions of the study should provide a basis for projecting the feasibility of adapting the interrupter technique to a breaker rated at 500 kV, 2.5 kA continuous current and capable of interrupting 2 kA.

9.5 DC FAULT DETECTORS STUDY

A study that would establish the requirements for fault detectors to determine if the existing detectors are adequate is proposed. This study could be combined with a system study (Sect. 9.2) and would investigate the requirements for communication and system logic, as well as the methods of detection.

9.6 DEVELOPMENT OF MT HVDC CONTROL ALGORITHMS

New control algorithms are needed for MT HVDC systems that do not use a dc circuit breaker. These algorithms would provide control for dc current and voltage, power modulation, and power interchanges between the ac and dc network.

Although some development work and studies have been performed in this area, there is still a need for new control designs that will enhance the performance of the power system.

REFERENCES

1. N. G. Hingorani, "The Re-emergence of DC in Modern Power Systems," *EPRI J.* **3**(3) (June 1978).
2. J. J. Vithayathil, "Requirements for Potential Applications," presented at Panel Session on Prospects for Multiterminal HVDC Transmission, IEEE Power Engineering Society 1980 Winter Power Meeting, New York, January 1980.
3. V. Lamm, E. Uhlmann, and P. Danfors, "Some Aspects of Tapping of HVDC Transmission Systems," *Direct Curr.*, pp. 124-29 (May 1963).
4. J. Reeve and J. Arrillaga, "Series Connection of Converter Stations in an HVDC Transmission System," *Direct Curr.*, pp. 72-78 (May 1965).
5. J. Greenwood, "HVDC Circuit Breakers—Where Do We Stand?" presented at Symposium on Incorporating HVDC Power Transmission into System Planning, Phoenix, Ariz., 1980.
6. W. Rieder, "Circuit Breakers, Physical and Engineering Problems," *IEEE Spectrum*, pp. 35-43 (July 1970).
7. D. Kind et al., "Circuit Breakers for HVDC Transmission," CIGRE, Report 13-08 (1968).
8. N. Pucker et al., "Fundamentals of HVDC Interruption," *Electra*, No. 5 (1968).
9. J. E. Heidrich and T. H. Lee, "Interruption of Direct Current by Utilizing an Arc-Circuit Instability," presented at IEEE Conference on Plasma Science, Santa Fe, N. Mex., 1981, Paper 4E9.
10. J. Gorman et al., "The Interaction of Vacuum Arcs with Magnetic Fields and Applications," *IEEE Trans. Power Appar. Syst.* **102**(2), 257-66 (1983).
11. A. Ekstrom et al., "Design and Testing of an HVDC Circuit Breaker," CIGRE, Report 13-06, 1976.
12. G. A. Hoffman et al., "A High Speed HVDC Circuit Breaker with Crossed Field Interrupters," *IEEE Trans. Power Appar. Syst.* **95,** 1182-93 (July-August 1976).
13. G. A. Hoffman et al., "Research and Development on DC Circuit Breakers," Electric Power Research Institute Report EL-379, 1976.
14. H. Gallagher et al., "The Crossed Field Switch Tube—A New HVDC Circuit Interrupter," *IEEE Trans. Power Appar. Syst.* **92** (March-April 1973).
15. G. A. Hoffman et al., "The Gamitron—A High Power Crossed Field Switch for HVDC Interruption," *IEEE Trans. Plasma Sci.* **2** (March 1974).
16. B. L. Damsky et al., *Development of an HVDC Prototype Breaker,* Report DOE/ET/29-054-1.
17. A. N. Greenwood and T. H. Lee, "Theory and Application of the Commutation Principle for HVDC Breakers," *IEEE Trans. Power Appar. Syst.* **91,** 1570-74 (July-August 1972).

18. S. Yanabu et al., "Development of HVDC Circuit Breaker and Its Interrupting Test," *IEEE Trans. Power Appar. Syst.* **101**(7), 1958-65 (July 1982).

19. W. F. Long, "Fundamentals of HVDC Power Transmission," presented at Symposium on Incorporating HVDC Power Transmission into System Planning, Phoenix, Ariz., 1980.

20. J. Reeve, "Multiterminal HVDC Power Systems," *IEEE Trans. Power Appar. Syst.* **99** (March-April 1980).

21. L. A. Bergstrom, L. E. Juhlin, G. Liss, "Simulator Study of Multiterminal HVDC System Performance," *IEEE Trans. Power Appar. Syst.* **97** (November-December 1978).

22. J. P. Bowles, "System Studies for HVDC Circuit Breakers," EPRI Research Project 326-1, Final Report (December 1979).

23. T. Sakurai et al., "A New Control Method for Multiterminal HVDC Transmission Systems," *IEEE Trans. Power Appar. Syst.* **102**(5), 1140-50 (May 1983).

24. J. P. Bowles et al., "The Control and Performance of a Series Connected Multiterminal HVDC Transmission System," *IEEE Trans. Power Appar. Syst.* **94** (September-October 1975).

APPENDIX

HVDC OPERATIONAL CONCEPTS

Power control in an HVDC system is obtained by controlling the voltage at the inverter and rectifier. The voltage control can be accomplished by using transformer taps to vary the ac reference voltage or by varying the ignition angle of the rectifier or inverter. The ignition angle control has the fastest response and is usually used. The ignition angle is denoted by α.

The current in an HVDC system is a function of the difference between the rectifier dc voltage and the dc voltage at the inverter. Thus, the current can be controlled by varying either voltage. The rectifier is normally used for current control, and the inverter establishes system voltage.

The modern rectifier and inverter stations are comprised of thyristors. The thyristors are solid state devices consisting of anode, cathode, and firing gate. The thyristors are configured in series/parallel arrays to meet system voltage and current requirements. The thyristors are controlled by an ac reference voltage and a gate firing pulse. To operate, the thyristors must have a positive voltage at the anode with respect to the cathode and a firing pulse at the thyristor gate. The anode-to-cathode voltage relationship is provided by the ac reference voltage, and the firing pulse is provided by the HVDC control system. In usual operation, the ac system voltage is the reference voltage.

The length of conduction time for the thyristor affects the dc voltage, and this conduction interval is controlled by the ignition angle. The ignition angle is defined as the interval from when the thyristor is capable of being activated until the time when the gate pulse is applied.

The ignition angle can vary from 0–90° for a rectifier and from 90–180° for an inverter. Because of commutation requirements, the rectifier and inverter do not normally operate at the extremes of the ignition angle ranges.

The most common malfunction of an inverter in an HVDC transmission system is a commutation failure, where commutation is defined as the transfer of current from one thyristor to another thyristor. The commutation failure results in a short circuit in the inverter. Depending on which thyristors failed to commutate, the short circuit may either be on the dc terminals or the ac terminals.

For an example of a commutation failure, consider two thyristors in parallel, denoted thyristors 1 and 2. For current to be transferred from thyristor 1 to thyristor 2, two conditions must occur. The previously discussed conditions for thyristor conduction must be satisfied (a positive voltage at the anode with respect to the cathode and a firing pulse at the thyristor gate). In addition, the anode voltage of thyristor 2 must be more positive than the anode voltage of thyristor 1. When these conditions are satisfied, the current will begin to transfer. However, for the transfer to be successfully completed, there must be no current flowing in thyristor 1 when its anode voltage becomes more positive than that of thyristor 2. If the current in thyristor 1 is not zero, the current that was flowing in thyristor 2 will be transferred back to thyristor 1. This return of current is independent of a gate firing pulse to thyristor 1 since the thyristor remains in a conducting state until it receives a current zero.

Commutation failures may be caused by excessive dc, low ac voltage, or inadequate control of the ignition angle. Excessive dc is a cause of failure because the required transfer time is dependent on the current level. If the current is too high, it may not be transferred in time. The high current may be the result of a control problem or low ac voltage at the inverter.

A low ac voltage lowers the direct voltage of the inverter. This voltage reduction, because of the relationship between voltage and current in an HVDC system, increases the dc.

The problem of an inadequate ignition angle can be seen by considering the commutation failure with thyristors 1 and 2. If the firing pulse for thyristor 2 was applied too late, the current transfer would not be completed prior to the ac voltage reversal at the anode of thyristor 1. One of the functions of an HVDC control system is to ensure that the firing pulses are applied so that they do not cause commutation failures. The firing pulses are usually applied to provide more than an adequate margin for a current zero to occur.

An advantage of an HVDC transmission system is that the short-circuit current is easily limited by the control system. When the short circuit is on the ac line, the HVDC control system will limit the dc current to the prefault level. With a fault on the dc transmission line, the control system will reduce the short-circuit current to zero by rapidly reducing the line voltage.

When an overcurrent condition is detected by the HVDC control system, the controls will begin reducing the rectifier voltage. The control system also detects that, because of the fault, the inverter is receiving zero current. The control system will begin reducing the inverter voltage by varying the ignition angle. If left unchecked, the ignition angle will be varied until the inverter is forced into rectification in order to satisfy the current requirements at the inverter. The control system, however, does not allow the inverter to go into rectification. When the fault is detected, the control system overrides its normal operation and forces the rectifier into inversion by increasing the ignition angle. The fault energy is then returned to the ac system.

The detection of the short circuit is accomplished by using a voltage-derivative unit or a voltage-level detector. The voltage-derivative unit responds after ~3 ms, if the rate of decrease of rectifier dc voltage exceeds a preset value and if the dc voltage decreases below 75% of its normal level.

The voltage-level detector responds after about 50 ms, if the dc voltage decreases below 45% of its normal value. The different time delays (3 ms and 50 ms) provide selectivity between dc and ac line faults.

ORNL/TM-8724
Dist. Category 97a

INTERNAL DISTRIBUTION

1–5. R. B. Biggs
6. R. S. Carlsmith
7. W. Fulkerson
8. P. A. Gnadt
9. D. M. Hamblin
10. T. L. Hudson
11. J. W. Michel
12. M. O. Pace
13. D. T. Rizy
14. D. J. Slaughter
15. Isidor Sauers
16. J. P. Stovall
17–18. Central Research Library
19. Document Reference Section
20. Energy Information Library
21. Laboratory Records—RC
22–23. Laboratory Records Department
24. ORNL Patent Section
25. Y-12 Technical Library

EXTERNAL DISTRIBUTION

26. R. D. Dunlop, Department of Energy, CE-143, Division of Electric Energy Systems, Forrestal Building, 1000 Independence Avenue, SW, Washington, DC 20585
27. Stephen M. Gillis, Professor, Harvard Institute for International Development, Coolidge Hall, Room 608C, 1737 Cambridge Street, Cambridge, MA 02138
28. Fritz R. Kalhammer, Vice President, Energy Management and Utilization Division, Electric Power Research Institute, P.O. Box 10412, Palo Alto, CA 94303
29. K. W. Klein, Department of Energy, CE-143, Division of Electric Energy Systems, Forrestal Building, 1000 Independence Avenue, SW, Washington, DC 20585
30. D. J. Roesler, Department of Energy, CE-143, Division of Electric Energy Systems, Forrestal Building, 1000 Independence Avenue, SW, Washington, DC 20585
31. R. Eaton, Department, MS 5E-052, 1000 Independence Avenue, SW, Washington, DC 20585
32. Dennis P. Carroll, School of Electrical Engineering, Purdue University, West Lafayette, IN 47907
33. Aleksa Gavrilovic, GEC High Voltage Switchgear and Power Transmission, Stafford, ST17 4LN, England
34. R. Eugene Goodson, Hoover Universal, Inc., 135 E. Bennett Street, P.O. Box 113, Saline, MI 48176
35. Narain G. Hingorani, Electric Power Research Institute, P.O. Box 10412, Palo Alto, CA 94303
36–40. W. T. Jewell, Oklahoma State University, School of Electrical and Computer Engineering, Rm. 202 Engineering South, Stillwater, OK 74078
41. Todd R. LaPorte, University of California, 109 Moses Hall, Berkeley, CA 94720
42. Robert H. Lasseter, University of Wisconsin-Madison, Department of Electrical and Computer Engineering, 1415 Johnson Drive, Madison, WI 53708
43. Jack S. Lawler, University of Tennessee, Department of Electrical Engineering, Knoxville, TN 37996

44. Willis Long, University of Wisconsin, Departments of Electrical and Computer Engineering and Extension Engineering, Madison, WI 53706
45. Laurence I. Moss, Energy/Environmental Design and Policy Analysis, 5769 Longs Peak Route, Estes Park, CO 80517
46. Arun G. Phadke, Electrical Engineering Department, Virginia Polytechnic Institute and State University, Blacksburg, VA 24061
47. Milton Russell, Director, Center for Energy Policy Research, Resources for the Future, 1755 Massachusetts Avenue, NW, Washington, DC 20036
48. V. J. Sood, 1800, Montee Ste-Julie, Varenes, Quebec, Canada JOL 2PO
49. J. Charles Smith, McGraw-Edison Co., Systems Engineering, P.O. Box 440, Canonsburg, PA 15317
50. John Vithayathil, Bonneville Power Administration, Portland, OR 97208
51. William H. Williams, Division Manager, American Telephone and Telegraph, Building 53, Room 110, Murray Hill, NJ 07974
52. Office of the Assistant Manager, Energy Research and Development, U.S. Department of Energy, Oak Ridge Operations, Oak Ridge, TN 37831

53–313. Given distribution as shown in DOE/TIC-4500 under category UC-97a, Electric Energy Systems—Transmission (25 copies NTIS)