OAK RIDGE NATIONAL LABORATORY LIBRARY
3 4456 0002881 4

ornl

NUREG/CR-4183
Volume 1
(ORNL/TM-9567/V1)

OAK RIDGE NATIONAL LABORATORY

MARTIN MARIETTA

Pressurized Thermal Shock Evaluation of the H. B. Robinson Unit 2 Nuclear Power Plant

Prepared for the
Division of Risk Analysis and Operations
Office of Nuclear Regulatory Research
U.S. Nuclear Regulatory Commission
Under DOE Interagency Agreement 40-550-75

OAK RIDGE NATIONAL LABORATORY
CENTRAL RESEARCH LIBRARY
CIRCULATION SECTION
4500N ROOM 175
LIBRARY LOAN COPY
DO NOT TRANSFER TO ANOTHER PERSON
If you wish someone else to see this report, send in name with report and the library will arrange a loan.
UCN-7969 (3 9-77)

OPERATED BY
MARTIN MARIETTA ENERGY SYSTEMS, INC.
FOR THE UNITED STATES
DEPARTMENT OF ENERGY

NOTICE

This report was prepared as an account of work sponsored by an agency of the United States Government. Neither the United States Government nor any agency thereof, or any of their employees, makes any warranty, expressed or implied, or assumes any legal liability or responsibility for any third party's use, or the results of such use, of any information, apparatus product or process disclosed in this report, or represents that its use by such third party would not infringe privately owned rights.

Available from

Superintendent of Documents
U.S. Government Printing Office
Post Office Box 37082
Washington, D.C. 20013-7982

and

National Technical Information Service
Springfield, VA 22161

NUREG/CR-4183
Volume 1
ORNL/TM-9567/V1
Distribution Category RG

Engineering Physics and Mathematics Division

PRESSURIZED THERMAL SHOCK EVALUATION OF THE H. B. ROBINSON UNIT 2 NUCLEAR POWER PLANT

(Chapters 1–8)

by

Oak Ridge National Laboratory
PTS Study Group

assisted by

Science Applications International Corporation
Idaho National Engineering Laboratory
Purdue University

Project Manager: D. L. Selby, ORNL
Program Manager: G. F. Flanagan, ORNL
Project Editor: Lorraine Abbott, ORNL
Technical Monitor: Carl Johnson, NRC

Date Published: September 1985

Prepared for the
Division of Risk Analysis and Operations
Office of Nuclear Regulatory Research
U.S. Nuclear Regulatory Commission
Under DOE Interagency Agreement 40-550-75
NRC FIN No. B0468

Prepared by the
Oak Ridge National Laboratory
Oak Ridge, Tennessee 37831
operated by
Martin Marietta Energy Systems, Inc.
for the
U.S. DEPARTMENT OF ENERGY
under Contract No. DE-AC05-840R21400

OAK RIDGE NATIONAL LABORATORY LIBRARY
3 4456 0002881 4

PARTICIPANTS IN THE PTS STUDY FOR H. B. ROBINSON UNIT 2

Principal Author

D. L. Selby
Oak Ridge National Laboratory

Contributing Authors

D. G. Ball G. F. Flanagan
R. D. Cheverton W. T. Hensley
J. D. White
Oak Ridge National Laboratory

P. N. Austin A. F. McBride
D. Bozarth J. W. Minarick
D. E. Korns L. B. LaMonica
C. L. Mason R. Olson
G. L. Zigler
Science Applications International Corporation

C. B. Davis C. D. Fletcher
D. M. Ogden
Idaho National Engineering Laboratory

P. Gherson H. P. Nourbakhsh
K. Iyer T. G. Theofanous
Purdue University

P. Humphreys L. D. Phillips
Decision Analysis Unit
London School of Economics and Political Science

D. Embrey
Human Reliability Associates, Lancashire, England

Report Staff

Lorraine Abbott Katie Ingersoll
Cheryl Buford Jacqueline Lasch
Oak Ridge National Laboratory

LIST OF CHAPTERS AND APPENDICES

Chapters

1. INTRODUCTION
   J. D. White and D. L. Selby, Oak Ridge National Laboratory

2. DESCRIPTION OF THE H. B. ROBINSON UNIT 2 NUCLEAR POWER PLANT
   R. Olson, A. F. McBride, and P. N. Austin, Science Applications International Corporation
   D. L. Selby and W. T. Hensley, Oak Ridge National Laboratory

3. DEVELOPMENT OF POTENTIAL OVERCOOLING SEQUENCES FOR H. B. ROBINSON UNIT 2
   C. L. Mason, A. F. McBride, R. Olson, and P. N. Austin, Science Applications International Corporation
   D. L. Selby, Oak Ridge National Laboratory

4. THERMAL-HYDRAULIC ANALYSES OF POTENTIAL OVERCOOLING TRANSIENTS FOR H. B. ROBINSON UNIT 2
   C. D. Fletcher, C. B. Davis, and D. M. Ogden, Idaho National Engineering Laboratory
   L. B. LaMonica, Science Applications International Corporation
   T. G. Theofanous, Purdue University
   D. L. Selby, Oak Ridge National Laboratory

5. PROBABILISTIC FRACTURE-MECHANICS ANALYSIS OF POTENTIAL OVERCOOLING SEQUENCES FOR H. B. ROBINSON UNIT 2
   R. D. Cheverton and D. G. Ball, Oak Ridge National Laboratory

6. INTEGRATED PTS RISK FOR H. B. ROBINSON UNIT 2 AND POTENTIAL MITIGATION MEASURES
   J. W. Minarick, Science Applications International Corporation
   D. L. Selby, Oak Ridge National Laboratory

7. SENSITIVITY AND UNCERTAINTY ANALYSES OF ESTIMATED THROUGH-THE-WALL CRACK FREQUENCIES FOR H. B. ROBINSON UNIT 2
   D. Bozarth, C. L. Mason, and J. W. Minarick, Science Applications International Corporation

8. CONCLUSIONS AND RECOMMENDATIONS
   D. L. Selby, R. D. Cheverton, and G. F. Flanagan, Oak Ridge National Laboratory
   D. P. Bozarth, Science Applications International Corporation

Appendices

A. SUPPORT SYSTEM INTERACTION ANALYSIS FOR H. B. ROBINSON UNIT 2
P. N. Austin, D. E. Korns, and G. L. Zigler, Science Applications International Corporation

B. PTS INITIATING-EVENT FREQUENCY AND BRANCH PROBABILITY SCREENING ESTIMATES
J. W. Minarick and P. N. Austin, Science Applications International Corporation
D. L. Selby, Oak Ridge National Laboratory

C. A SOCIO-TECHNICAL APPROACH TO ASSESSING HUMAN RELIABILITY (STAHR)
L. D. Phillips and P. Humphreys, London School of Economics and Political Science
D. E. Embrey, Human Reliability Associates, Lancashire, England
D. L. Selby, Oak Ridge National Laboratory

D. QUANTIFICATION OF OPERATOR ACTIONS
D. L. Selby, Oak Ridge National Laboratory
L. D. Phillips, London School of Economics and Political Science
D. E. Embrey, Human Reliability Associates, Lancashire, England

E. BUOYANCY EFFECTS IN OVERCOOLING TRANSIENTS CALCULATED FOR H. B. ROBINSON UNIT 2
T. G. Theofanous, K. Iyer, H. P. Nourbakhsh, and P. Gherson, Purdue University

F. ESTIMATIONS OF PRESSURES, TEMPERATURES, AND HEAT TRANSFER COEFFICIENTS FOR POSTULATED OVERCOOLING SEQUENCES
C. D. Fletcher, Idaho National Engineering Laboratory

G. THE USE OF *RTNDT* AND $\Delta RTNDT$ AS INDEPENDENT VARIABLES
R. D. Cheverton and D. G. Ball, Oak Ridge National Laboratory

H. IMPORTANCE SAMPLING METHODS IN THE OCA-P PROBABILISTIC FRACTURE-MECHANICS ANALYSIS
R. D. Cheverton and D. G. Ball, Oak Ridge National Laboratory

I. COMPILATION OF RESULTS FOR HBR-HYPO PROBABILISTIC FRACTURE-MECHANICS ANALYSIS
R. D. Cheverton and D. G. Ball, Oak Ridge National Laboratory

J. USEFUL RESULTS FOR THE LOG-NORMAL DISTRIBUTION
D. Bozarth and J. W. Minarick, Science Applications International Corporation

K. RESPONSES TO UTILITY COMMENTS
D. L. Selby, Oak Ridge National Laboratory

DETAILED TABLE OF CONTENTS

Page

PARTICIPANTS IN PTS STUDY FOR CALVERT CLIFFS UNIT 1 iii

LIST OF CHAPTERS AND APPENDICES v

LIST OF ACRONYMS xv

ABSTRACT xix

Chapters 1–8

1. INTRODUCTION 1
   - 1.1. Background 3
   - 1.2. Overall Objectives of PTS Studies 4
   - 1.3. Limitations of the Studies 4
   - 1.4. PTS Analysis for H. B. Robinson Unit 2 4
   - 1.5. Description of This Report 5
   - 1.6. References 6

2. DESCRIPTION OF THE H. B. ROBINSON UNIT 2 NUCLEAR POWER PLANT 7
   - 2.1. Introduction 9
   - 2.2. Reactor Vessel and Its Internals 9
   - 2.3. Reactor Coolant System 13
     - 2.3.1. Steam Generator 13
     - 2.3.2. Reactor Coolant Pumps (RCPs) 15
     - 2.3.3. Reactor Coolant Piping 15
     - 2.3.4. Pressurizer 16
   - 2.4. Main Steam System 19
     - 2.4.1. Steam Generator 19
     - 2.4.2. Turbine-Generator 22
     - 2.4.3. Steam Dump System (Condenser Dump System) 23
     - 2.4.4. Steam PORV System 23
     - 2.4.5. Main Steam Check Valves 24
     - 2.4.6. Main Steam-Line Isolation Valves 24
     - 2.4.7. Steam Pressure Safety Relief Valves 24
     - 2.4.8. Flow Restrictions 25
   - 2.5. Main Condensate and Feedwater System 25
     - 2.5.1. Condensate Storage Tank 27
     - 2.5.2. The Condenser 27
     - 2.5.3. Condensate Pumps 27
     - 2.5.4. Feedwater Heaters 27

2.5.5. Main Feedwater Pumps 28
2.5.6. Feedwater Control Valves and Bypass Valves 28
2.5.7. Main Feedwater Isolation Valve 28

2.6. Auxiliary Feedwater System 28

2.6.1. Auxiliary Feedwater Pumps 30
2.6.2. Auxiliary Feedwater Control 30
2.6.3. Auxiliary Feedwater Block Valves 30

2.7. Safety Injection System 31

2.7.1. High-Pressure Injection System 31
2.7.2. Low-Pressure Injection System 31
2.7.3. Accumulators 33

2.8. Chemical and Volume Control System 33

2.8.1. Letdown Isolation Valves 33
2.8.2. Letdown Flow Controllers 33
2.8.3. Charging Pumps 35
2.8.4. Regenerative Heat Exchanger 35

2.9. Support Systems 35

2.9.1. Support System Descriptions 36

2.9.1.1. Electric power systems 36
2.9.1.2. Instrument air system 39
2.9.1.3. Component cooling water system 39
2.9.1.4. Service water system 40

2.9.2. Support System Interfaces to Systems with PTS Significance 40

2.9.2.1. Charging pump control 40
2.9.2.2. Main feedwater system 40
2.9.2.3. Main steam system 42
2.9.2.4. Steam dump system 42
2.9.2.5. Safety injection system 42
2.9.2.6. Auxiliary feedwater system 42
2.9.2.7. Residual heat removal system 43
2.9.2.8. Reactor protection system 43
2.9.2.9. Turbine protection system 43
2.9.2.10. Switchgear 44

2.9.3. Impact of Support System Failures 44

2.9.3.1. Electrical bus failures 44
2.9.3.2. Instrument air system failures 53
2.9.3.3. Cooling water system failures 53

2.9.4. Summary 55

2.10. References 56

3. DEVELOPMENT OF POTENTIAL OVERCOOLING SEQUENCES FOR H. B. ROBINSON UNIT 2 57

3.1. Introduction 59
3.2. System State Trees 59

3.2.1. Reactor Vessel and Its Internals 60
3.2.2. Reactor Coolant System 60
3.2.3. Main Steam System 61
3.2.4. Feedwater and Condensate System 61
3.2.5. Auxiliary Feedwater System 65
3.2.6. Safety Injection System 65
3.2.7. Chemical and Volume Control System 67

3.3. Potential Initiating Events 69

3.3.1. Events Causing a Decrease in the Charging Flow Enthalpy 70
3.3.2. Events Causing an Excess Steam Flow from the Steam Generators 70

3.3.2.1. Large steam-line break 71
3.3.2.2. Small steam-line break 73
3.3.2.3. Failed-open STM PORVs or SDVs 73
3.3.2.4. Main steam-line safety valves open and fail to close 74
3.3.2.5. Reactor trip 74

3.3.3. Events Causing a Decrease in the Feedwater Enthalpy 74
3.3.4. Events Causing Feedwater Overfeed 75
3.3.5. Inadvertent Safety Injection Events 76
3.3.6. Loss-of-Coolant Accidents 76
3.3.7. Events Consisting of Pressurizer Pressure Control Failures 77
3.3.8. Events Leading to Steam Generator Tube Rupture 77
3.3.9. Summary 78

3.4. Initiator-Specific Event Trees 78

3.4.1. Steam-Line Break at Hot 0% Power 79
3.4.2. Steam-Line Break at Full Power 81
3.4.3. Reactor Trip 83
3.4.4. Small-Break LOCA at Full Power 83
3.4.5. Medium-Break LOCA at Full Power 85
3.4.6. Small-Break LOCA at Hot 0% Power 85
3.4.7. Medium-Break LOCA at Hot 0% Power 85
3.4.8. Tube Rupture 85
3.4.9. Loss of Main Feedwater 86

3.5. Event-Tree Quantification and Collapse 86

3.5.1. Reactor Trip 88
3.5.2. Large Steam-Line Break at Hot 0% Power 89

3.5.3. Small Steam-Line Break at Hot 0% Power 89
3.5.4. Large Steam-Line Break at Full Power 110
3.5.5. Small Steam-Line Break at Full Power 117
3.5.6. Small-Break LOCA at Full Power 117
3.5.7. Medium-Break LOCA at Full Power 119
3.5.8. Small-Break LOCA at Hot 0% Power 140
3.5.9. Medium-Break LOCA at Hot 0% Power 140
3.5.10. Tube Rupture 140
3.5.11. Loss of Main Feedwater 147
3.5.12. Support System Failures 147
3.5.13. Sequence Summary 151

3.6. References 155

4. THERMAL-HYDRAULIC ANALYSES OF POTENTIAL OVERCOOLING TRANSIENTS FOR H. B. ROBINSON UNIT 2 157

4.1. Introduction 159
4.2. Selection of Thirteen Transient Scenarios 159

4.2.1. Sequences Initiated by Small-Break LOCA at Full Power 160
4.2.2. Sequences Initiated by Medium-Break at Full Power 160
4.2.3. Sequences Initiated by Small-Break LOCA at Hot 0% Power 161
4.2.4. Sequences Initiated by Medium-Break LOCA at Hot 0% Power 161
4.2.5. Sequences Initiated by Small Steam-Line Break at Full Power 161
4.2.6. Sequences Initiated by Large Steam-Line Break at Full Power 161
4.2.7. Sequences Initiated by Small Steam-Line Break at Hot 0% Power 161
4.2.8. Large Steam-Line Break at Hot 0% Power 162
4.2.9. Sequences Initiated by Reactor Trip at Full Power 162
4.2.10. Sequences Initiated by Steam Generator Tube Rupture 162
4.2.11. Sequences Initiated by Loss of Feedwater 163
4.2.12. Sequences Initiated by Support System Failures 163
4.2.13. Summary 163

4.3. RELAP5 Analyses of Selected Transient Scenarios 165

4.3.1. The RELAP5 Model 165
4.3.2. Steam-Line Break Calculations 172

4.3.2.1. Scenario 1: ~0.1-m^2 (1.0-ft^2) steam-line break at hot 0% power 172
4.3.2.2. Scenario 2: Double-ended steam-line break at hot 0% power 178
4.3.2.3. Scenario 3: Stuck-open STM PORV at hot 0% power 183
4.3.2.4. Scenario 4: Three SDVs fail open at full power 186

4.3.3. Runaway Feedwater Calculations 193

4.3.3.1. Scenario 5: AFW overfeed at full power 193

4.3.4. Small-Break LOCA Calculations 196

4.3.4.1. Scenario 6: 2-1/2-in. hot leg break at full power .. 198
4.3.4.2. Scenario 7: PZR PORV-size break at full power .. 204
4.3.4.3. Scenario 8: 2-1/2-in. hot leg break at hot 0% power 209
4.3.4.4. Scenario 9: 2-in. hot leg break at full power 212
4.3.4.5. Scenario 10: PZR PORV-size break at hot 0% power 219

4.3.5. Steam Generator Tube Rupture Calculations 223

4.3.5.1. Scenario 11: SG tube rupture at hot 0% power 223
4.3.5.2. Scenario 12: SG tube rupture at full power 228

4.3.6. Loss of Heat Sink Calculations 232

4.3.6.1. Scenario 13: Loss of heat sink with primary system feed-and-bleed recovery 232

4.3.7. Summary of RELAP5 Calculated Scenarios 237

4.4. Evaluation of Flow Stratification Effects 239

4.4.1. Flow Stratification Evaluations 241

4.4.1.1. Scenario 1: 0.1-m^2 (1.0-ft^2) steam-line break at hot 0% power 241
4.4.1.2. Scenario 2: Double-ended steam-line break at hot 0% power 242
4.4.1.3. Scenario 13: Loss of heat sink with primary feed-and-bleed recovery 243
4.4.1.4. Scenario 6: 2-1/2-in. hot leg break at full power .. 243
4.4.1.5. Scenario 8: 2-1/2-in. hot leg break at hot 0% power 243
4.4.1.6. Scenario 11: SG tube rupture at hot 0% power 243
4.4.1.7. Total stagnation case 245

4.4.2. Heat Transfer Coefficient Evaluation 245

4.5. Estimations of Pressure, Temperature and Heat Transfer Coefficient Profiles for Potential Overcooling Sequences 247

4.5.1. Grouping of Sequences 247
4.5.2. Estimation Methods 249

4.5.2.1. Detailed RELAP5 model 252
4.5.2.2. Simplified RELAP5 model 252
4.5.2.3. Modified simplified RELAP5 model 254
4.5.2.4. Other techniques 256

4.5.3. Estimated Results for Sequence Groups 256

4.5.3.1. Sequences with secondary-side breaks 257
4.5.3.2. Sequences with SG tube ruptures 257
4.5.3.3. Sequences with reactor trip with minor failures 257
4.5.3.4. Sequences with combination primary- and secondary-side breaks 258
4.5.3.5. Sequences with primary-side breaks 258

4.6. References 259

5. PROBABILISTIC FRACTURE-MECHANICS ANALYSIS OF POTENTIAL OVERCOOLING SEQUENCES FOR H. B. ROBINSON UNIT 2 261

5.1. Introduction 263
5.2. Description of Basic Problem 263
5.3. Calculational Models 266

5.3.1. Fracture-Mechanics Model 266

5.3.1.1. Basic approach 266
5.3.1.2. Specific flaws included 266
5.3.1.3. Cladding 267
5.3.1.4. Material properties 269
5.3.1.5. Warm prestressing 272
5.3.1.6. Flaw behavior depicted with critical-crack-depth plots 272
5.3.1.7 *RTNDT* as the independent variable 273

5.3.2. Stress-Analysis Model 274
5.3.3. Thermal-Analysis Model 274
5.3.4. Probabilistic-Analysis Model 275

5.4. Flaw-Related Data for the HBR-2 and HBR-HYPO Pressure Vessels 283
5.5. Results of Analysis 284

5.5.1. Calculation of Conditional Probability of Vessel Failure, $P(F|E)$ 284
5.5.2. Sensitivity Analysis of $P(F|E)$ 287
5.5.3. Calculation of Effect on $P(F|E)$ of Including Warm Prestressing in Analysis 289
5.5.4. Calculation of Effect on $P(F|E)$ of Proposed Remedial Measures 292

5.5.4.1. Reduction in fluence rate 292
5.5.4.2. Annealing of the pressure vessel 294

5.6. References 305

6. INTEGRATED PTS RISK FOR H. B. ROBINSON UNIT 2 AND POTENTIAL MITIGATION MEASURES 307

6.1. Introduction 309

6.2. Risk Integration Procedure and Results 309
6.3. Dominant Risk Sequences 320
6.4. Relative Importance of Each Category of Sequences (by Initiating Events) 322
6.5. Effects of Potential Risk Reduction Measures 322
6.5.1. Reduction of Neutron Fluence Rate 324
6.5.2. In-Service Inspection of Vessel 324
6.5.3. Annealing of the Reactor Vessel 325
6.5.4. Summary of Effects of Potential Risk Reduction Measures 325
6.6. Reference 325

7. SENSITIVITY AND UNCERTAINTY ANALYSES OF ESTIMATED THROUGH-THE-WALL CRACK FREQUENCIES FOR H. B. ROBINSON UNIT 2 327
7.1. Introduction 329
7.2. Distribution Parameters and Range Estimates for Individual Variables 329
7.2.1. Initiating-Event Frequencies and Branch Probabilities 330
7.2.2. Fracture-Mechanics Variables 330
7.3. Uncertainty Analysis 331
7.3.1. Fracture-Mechanics Model for Uncertainty Analysis 338
7.3.2. Event-Tree Model for Uncertainty Analysis 341
7.3.3. Combined Event-Tree and Fracture-Mechanics Models 343
7.3.4. Error Distributions for Temperature and Pressure Histories 348
7.3.5. Results 348
7.4. Sensitivity Analysis 350
7.5. Discussion 352
7.6. References 353

8. CONCLUSIONS AND RECOMMENDATIONS 357
8.1. Introduction 359
8.2. Conclusions Specific to HBR-2 359
8.2.1. HBR-2 System Features Influencing PTS Analysis Results 359
8.2.2. Results of HBR-2 Overcooling Sequence Analysis 360
8.2.3. Results of HBR-2 Fracture-Mechanics Analysis 361
8.2.4. Results of HBR-2 Uncertainty and Sensitivity Analyses 362
8.2.5. General Statements Regarding Analysis Assumptions 363
8.3. Areas in PTS Analysis Technique Requiring Further Study and Development 363
8.4. Summary 364

Appendices A—K

(NOTE: See Volume 2 for appendices.)

A. SUPPORT SYSTEM INTERACTION ANALYSIS FOR H. B. ROBINSON UNIT 2 365

B. PTS INITIATING-EVENT FREQUENCY AND BRANCH PROBABILITY SCREENING ESTIMATES 421

C. A SOCIO-TECHNICAL APPROACH TO ASSESSING HUMAN RELIABILITY (STAHR) 449

D. QUANTIFICATION OF OPERATOR ACTIONS 465

E. BUOYANCY EFFECTS IN OVERCOOLING TRANSIENTS CALCULATED FOR H. B. ROBINSON UNIT 2 479

F. ESTIMATIONS OF PRESSURES, TEMPERATURES, AND HEAT TRANSFER COEFFICIENTS FOR POSTULATED OVERCOOLING SEQUENCES 503

G. THE USE OF *RTNDT* AND Δ*RTNDT* AS INDEPENDENT VARIABLES 645

H. IMPORTANCE SAMPLING METHODS IN THE OCA-P PROBABILISTIC FRACTURE-MECHANICS ANALYSIS 653

I. COMPILATION OF RESULTS FOR HBR–HYPO PROBABILISTIC FRACTURE-MECHANICS ANALYSIS 657

J. USEFUL RESULTS FOR THE LOG-NORMAL DISTRIBUTION 961

K. RESPONSES TO UTILITY COMMENTS 967

LIST OF ACRONYMS

AFW	—	Auxiliary Feedwater
ANS	—	American Nuclear Society
ASG	—	Affected Steam Generator
ASME	—	American Society of Mechanical Engineers
ASP	—	Accident Sequence Precursor
BNL	—	Brookhaven National Laboratory
CCD	—	Central Composite Design
CCW	—	Component Cooling Water
CVC	—	Chemical and Volume Control
CVCS	—	Chemical and Volume Control System
DS	—	Designated Shutdown
ECC	—	Emergency Core Cooling
ECCS	—	Emergency Core Cooling System
EFPY	—	Effective Full Power Years
ESFS	—	Engineered Safety Features System
FCV	—	Feedwater Control Valve
FM	—	Fracture-Mechanics
Fr	—	Froude Number
FSAR	—	Final Safety Analysis Report
FW	—	Feedwater
HBR-HYPO	—	Hypothetical HBR Vessel
HBR-2	—	H. B. Robinson Unit 2
HPI	—	High-pressure Injection
HPSI	—	High-pressure Safety Injection
HVAC	—	Heating, Ventilating, and Air Conditioning
HX	—	Heat Exchanger
HZP	—	Hot 0% Power
INEL	—	Idaho National Engineering Laboratory
IPRD	—	In-Plant Reliability Data
LANL	—	Los Alamos National Laboratory
LEFM	—	Linear Elastic Fracture Mechanics
LER	—	Licensee Event Report
LOCA	—	Lost-of-Coolant Accident
LOFW	—	Loss of Feedwater
LPI	—	Low-pressure Injection
MAFW	—	Mechanically Operated Auxiliary Feedwater
MBLOCA	—	Medium-break Lost-of-Coolant Accident
MCC	—	Motor Control Valve
MFBV	—	Main Feedwater Bypass Control Valve
MFCV	—	Main Feedwater Control Valve
MFIV	—	Main Feedwater Isolation Valve

MFW	—	Main Feedwater
MFWP	—	Main Feedwater Pump
MSIV	—	Main Steam Isolation Valve
NRC	—	Nuclear Regulatory Commission
NREP	—	National Reliability Evaluation Program
OA	—	Operation Action
ORNL	—	Oak Ridge National Laboratory
PSV	—	Pressurizer Safety Valve
PTC	—	Plant Trip Control
PORV	—	Pressurizer Power-operated Relief Valve
PTS	—	Pressurized Thermal Shock
PWR	—	Pressurized Water Reactor
PZR	—	Pressurizer
PZR PORV	—	Pressurizer Power-operated Relief Valve
PZR SV	—	Pressurizer Safety Valve
RC	—	Reactor Coolant
RCP	—	Reactor Coolant Pump
RCS	—	Reactor Coolant System
RHR	—	Residual Heat Removal
RMM	—	Regional Mixing Model
RPV	—	Reactor Pressure Vessel
RSM	—	Response Surface Model
RT	—	Reactor Trip
RTNDT	—	Reference Temperature for Nil-ductility Transition
RWST	—	Refueling Water Storage Tank
SAIC	—	Science Applications International Corporation
SBLOCA	—	Small-break Loss-of-coolant Accident
SCFM	—	standard cubic feet/minute
SDV	—	Steam Dump Valve
SG	—	Steam Generator
SI	—	Safety Injection
SIS	—	Safety Injection System
SIAS	—	Safety Injection Actuation Signal
SLB	—	Steam-line Break
SPC	—	Steam Pressure Control
SRV	—	Safety Relief Valve
SSLB	—	Small Steam-line Break
SSV	—	Steam-line Safety Valve
STAHR	—	Socio-technical Assessment of Human Reliability
STM PORV	—	Steam-power-operated Relief Valve
SUT	—	Startup Transformer
SW	—	Service Water
SWS	—	Service Water System

TBV	—	Turbine Bypass Valve
TCV	—	Turbine Control Valve
THERP	—	Technique for Human Error Rate Prediction
TROTS	—	Turbine Redundant Overspeed Trip System
TSV	—	Turbine Stop Valve
TT	—	Turbine Trip
TWC	—	Through-the-wall Crack
UAT	—	Unit Auxiliary Transformer
USG	—	Unaffected Steam Generator
WPS	—	Warm Prestressing
WR	—	Wide Range

ABSTRACT

An evaluation of the risk to the H. B. Robinson Unit 2 nuclear power plant (HBR-2) due to pressurized thermal shock (PTS) has been completed by Oak Ridge National Laboratory (ORNL) with the assistance of several other organizations. This evaluation was part of a Nuclear Regulatory Commission program designed to study the PTS risk to three nuclear plants, the other two plants being Oconee Unit 1 and Calvert Cliffs Unit 1. The specific objectives of the program were to (1) provide a best estimate of the frequency of a through-the-wall crack (TWC) in the pressure vessel at each of the three plants, together with the uncertainty in the estimated frequency and its sensitivity to the variables used in the evaluation; (2) determine the dominant overcooling sequences contributing to the estimated frequency and the associated failures in the plant systems or in operator actions; and (3) evaluate the effectiveness of potential corrective measures. In the study for HBR-2, thousands of hypothetical overcooling events were constructed and quantified using computer-generated event trees and quantified branch points. All scenarios with a frequency greater than 10^{-7} per reactor year were considered explicitly, and those having lower frequencies were assigned to 12 "residual" groups to ensure that their contributions to the TWC frequency were included in the study. Idaho National Engineering Laboratory (INEL) performed thermal-hydraulics analyses for all the identified scenarios, using detailed models for a few of them and simpler models for the remaining ones. The INEL models and results were reviewed by Brookhaven National Laboratory, and, in addition, mixing calculations pertinent to some of the scenarios were performed at Purdue University. Probabilistic fracture-mechanics calculations were performed by ORNL to determine the conditional TWC probability for each scenario, and it was found that, except in extreme cases, the probabilities for the HBR-2 vessel were too low to permit an appropriate illustration of the fracture-mechanics analysis method. Therefore, a hypothetical vessel (designated as HBR-HYPO) which had higher concentrations of the contaminants copper and nickel and a higher initial nil-ductility reference temperature was utilized in the fracture-mechanics analysis. The fracture-mechanics results were then integrated with the sequence frequencies to obtain the TWC frequency. The best estimate for the HBR-HYPO vessel was determined to be approximately 1.3×10^{-8} per year at a nil-ductility temperature of 270°F. An uncertainty analysis indicated that a factor of about 1000 is an appropriate 95% confidence interval, assuming a log-normal uncertainty distribution. Steam-line breaks involving the blowdown of more than one steam generator were found to be the most significant contributors to the PTS risk, and the uncertainty in the flaw density in the pressure vessel was found to be the most important contributor to the overall uncertainty in the risk. The most important operator actions for negating pressurized thermal shock at HBR-2 are the closure of the main steam isolation valves (MSIVs) following a small or medium-sized steam-line break downstream of the MSIVs and the isolation of auxiliary feedwater to low-pressure steam generators following a steam-line break. This study considered some system interactions but no external events such as fires, floods, or seismic events.

Chapter 1

INTRODUCTION

J. D. White and D. L. Selby

Oak Ridge National Laboratory

1. INTRODUCTION

1.1. Background

Before the late 1970s it was postulated that the most severe thermal shock a pressurized-water reactor vessel would be required to withstand would occur during a large-break loss-of-coolant accident (LOCA). In this type of overcooling transient, room-temperature emergency core coolant would flood the reactor vessel within a few minutes and rapidly cool the vessel wall. The resulting temperature difference across the wall would cause thermal stresses, with the inside surface of the wall in tension. However, the addition of pressure stresses to the thermal stresses was not considered, since it was expected that during a large-break LOCA the system would remain at low pressure.

In 1978, the occurrence of a non-LOCA-type event at the Rancho Seco Nuclear Power Plant in California showed that during some types of overcooling transients the rapid cool-down could be accompanied by repressurization of the primary system, which would compound the effects of the thermal stresses. As long as the fracture resistance of the reactor vessel remains relatively high, such transients are not expected to cause the reactor vessel to fail. However, after the fracture toughness of the vessel is gradually reduced by neutron irradiation, severe pressurized thermal shock (PTS) might cause a small flaw already existing near the inner surface of the wall to propagate through the wall. Depending on the progression of the accident, such a through-the-wall crack (TWC) could lead to core melting.

Following the Rancho Seco incident, the Nuclear Regulatory Commission (NRC) designated pressurized thermal shock as an unresolved safety issue (A-49), and the effects of pressurized thermal shock at operating PWRs were analyzed with input from the owner groups and from eight selected utilities. On the basis of these analyses, NRC concluded that no event having a significant probability of occurring could cause a PWR vessel to fail today or within the next few years. However, NRC projected that as PWR vessels are irradiated, particularly those containing copper in their welds, a few vessels could eventually become susceptible to pressurized thermal shock (SECY-82-465, SECY-83-288, and SECY-83-443).

In order to address the PTS possibility, NRC published a proposed rule that (1) establishes a screening criterion on the reference temperature for nil-ductility transition (*RTNDT*), (2) requires licensees to accomplish reasonably practicable flux reductions to avoid exceeding the screening criterion, and (3) requires plants that cannot stay below the screening criterion to submit a plant-specific safety analysis to determine what, if any, modifications are necessary if continued operation beyond the screening limit is allowed.

In addition, NRC organized a PTS research project, described in part in this report, to help confirm the technical bases for the proposed PTS rule and to aid in the development of guidance for licensee plant-specific PTS analyses, as well as the development of acceptance criteria for proposed corrective measures. The research project consisted of PTS pilot analyses for three PWRs: Oconee Unit 1, designed by Babcock and Wilcox; Calvert Cliffs Unit 1, designed by Combustion Engineering; and H. B. Robinson Unit 2,

designed by Westinghouse. The study team consisted of Oak Ridge National Laboratory (ORNL), Idaho National Engineering Laboratory (INEL), Los Alamos National Laboratory (LANL), Brookhaven National Laboratory (BNL), and Purdue University, with the results being integrated by ORNL. The results of the third of the three planned pilot analyses, that for H. B. Robinson Unit 2, are described in this report. The results of the first analysis, for Oconee Unit 1, and the second, for Calvert Cliffs Unit 1, are described in separate reports.[1,2]

1.2. Overall Objectives of PTS Studies

The overall objectives of the PTS studies at ORNL were (1) to provide for each of the three plants an estimate of the probability of a crack propagating through the wall of a reactor pressure vessel due to pressurized thermal shock; (2) to determine the dominant overcooling sequences, plant features, and operator and control actions and the uncertainty in the plant risk due to pressurized thermal shock; and (3) to evaluate the effectiveness of potential corrective measures. ORNL was also to determine what parts of the studies might have generic applicability.

1.3. Limitations of the Studies

Determining the *consequences* of a through-the-wall crack was not a part of the program; that is, studies of the geometry of a through-the-wall crack, missile formation, the means for cooling the core, the extent of radiation releases, and risks to the public were not addressed. These consequences are to be studied under other NRC-sponsored work.

Neither did the program consider the effects of external events, such as earthquakes, fires, and floods (both external and internal to the containment), and sabotage. ORNL suspects that the effect of excluding such events is not serious because of (1) the low probabilities that the events will occur and (2) the likelihood that failures of systems due to external events would cause undercooling situations rather than overcooling situations.

1.4. PTS Analysis for H. B. Robinson Unit 2

This report describes the PTS analysis of H. B. Robinson Unit 2, a PWR designed by Westinghouse and located in Hartsville, South Carolina. The reactor is owned and operated by the Carolina Power and Light Company.

The reactor coolant system of H. B. Robinson Unit 2 has three hot legs and three cold legs and utilizes three U-tube steam generators. The PTS analysis for the unit consisted of

(1) gathering plant data,

(2) building event-tree models and thermal-hydraulic models,

(3) quantifying frequencies of event-tree end states,

(4) predicting thermal-hydraulic responses of the plant to the events,

(5) calculating the conditional probability of a through-the-wall crack for each event,

(6) integrating steps 3 and 5 to produce an estimate of overall through-the-wall crack frequency at H. B. Robinson Unit 2 due to all events considered,

(7) performing sensitivity and uncertainty analyses on the results, and

(8) evaluating potential corrective measures.

In support of the program, Carolina Power and Light Company provided the research team with copies of plant drawings, plant data and operating procedures for H. B. Robinson Unit 2. Thermal-hydraulic analysis models were developed by Idaho National Engineering Laboratory (INEL) and Purdue University under other NRC-funded programs supporting the ORNL PTS studies.

Both simple and complex RELAP5 models were developed by INEL and used to provide temperature and pressure data for identified transients. INEL calculations were reviewed by Brookhaven National Laboratory. In addition, because the RELAP5 computer code used by INEL could not perform detailed mixing calculations, additional thermal-hydraulic studies that included mixing were performed under another NRC contract by Purdue University. All other work was performed by ORNL or by its subcontractor Science Applications International Corporation (SAI).

1.5. Description of This Report

This report presents the results of the specific study for H. B. Robinson Unit 2 and describes the methodology developed for performing the analysis. Chapter 2 describes the plant's components and operational behavior characteristics that are believed by ORNL to be pertinent to the PTS issue. Hopefully, this chapter and the accompanying references could be used to build other models of the unit. The reader is advised, however, that building a model useful in PTS studies is a difficult process due to the many complex interactions that occur between the plant systems in operational upsets and the model may not be applicable to other types of transients. Included in Chapter 2 and in Appendix A is a discussion of the potential overcooling effects due to failures in the electric power, compressed air and cooling water systems.

Chapter 3 describes the hypothetical overcooling sequences considered in the analysis. The methodology used to determine what sequences are possible and how frequencies for the sequences are estimated is discussed in detail. An event-tree approach was chosen; no fault trees were used in this analysis. System state trees and event-tree descriptions are included in this chapter. The branch frequencies used to quantify equipment states are presented in Appendix B, and the quantification of operator actions is discussed in Appendices C and D.

Chapter 4 discusses the thermal-hydraulics models and summarizes the calculations from the INEL and Purdue analyses. From this chapter, the reader can obtain a good understanding of how H. B. Robinson Unit 2 is predicted to behave under hypothetical overcooling scenarios. Appendices E and F provide some of the technical data, supplied by INEL and Purdue, upon which Chapter 4 is based.

Chapter 5 describes the calculations of conditional TWC probabilities for groups of thermal-hydraulic responses. This work, done at ORNL, utilized probabilistic fracture-mechanics analytical methods in assessments of the probability that cracks might propagate through the reactor vessel wall. The chapter describes the vessel welds and their chemistries and gives estimated fluences throughout the expected plant lifetime. The assumed crack densities and distributions are also described. Details of the fracture-mechanics calculations are given in Appendices G, H, and I.

The integration of the event-sequence analysis, thermal-hydraulic analysis and fracture-mechanics analysis to produce an overall best estimate of PTS risk at H. B. Robinson Unit 2 is described in Chapter 6. In this chapter the dominant contributions to the risk and effects of potential corrective measures are discussed. Although a need for corrective measures at H. B. Robinson Unit 2 has not been established, the effects of corrective measures were studied to give the NRC or other future analysts an idea of the relative importance of different corrective actions. The overall effects of PTS corrective measures on plant safety and their cost effectiveness have not been examined.

The uncertainty in the PTS analysis is large, as was expected. An analysis of the uncertainties performed by SAI under contract to ORNL is described in Chapter 7, in which the major contributors to the uncertainty in overall PTS risks are identified. A discussion of sampling distributions used in the uncertainty analysis is included as Appendix J.

Conclusions of the study and recommendations are given in Chapter 8, and a list of utility comments and the changes made as a result of those comments are provided in Appendix K.

1.6. References

1. T. J. Burns *et al.*, *Preliminary Development of an Integrated Approach to the Evaluation of Pressurized Thermal Shock Risk as Applied to the Oconee Unit 1 Nuclear Power Plant*, NUREG/CR-3770 (ORNL/TM-9176), November 1985.

2. D. L. Selby *et al.*, *Pressurized Thermal Shock Evaulation of Calvert Cliffs Unit 1 Nuclear Power Plant*, NUREG/CR-4022 (ORNL/TM-9408), September 1985.

Chapter 2

DESCRIPTION OF THE H. B. ROBINSON UNIT 2 NUCLEAR POWER PLANT

R. Olson, A. McBride, and P. N. Austin

Science Applications International Corporation

D. L. Selby and W. T. Hensley

Oak Ridge National Laboratory

2. DESCRIPTION OF THE H. B. ROBINSON UNIT 2 NUCLEAR POWER PLANT

2.1. Introduction

This chapter discusses the important design details of seven systems of the H. B. Robinson Unit 2 nuclear power plant that potentially could cause or contribute to an overcooling transient event leading to pressurized thermal shock (PTS) of the pressure vessel. These seven systems are (1) the reactor vessel and its internals, (2) the reactor coolant system, (3) the main steam system, (4) the condensate and feedwater system, (5) the auxiliary feedwater system, (6) the safety injection system, and (7) the chemical volume and control system. In each case the components within the system and their functions are described, and the positive and negative effects that they would have during an overcooling event are examined.

In addition to these seven major systems, this chapter discusses four support systems which can influence the behavior of the components within the seven systems. These support systems are (1) the plant electrical system, (2) the component cooling water system, (3) the service water system, and (4) the instrument air system. For each of these systems, the impact of failures occurring within the support system on the operation of one or more of the seven systems during an overcooling event is examined.[1]

2.2. Reactor Vessel and Its Internals

The H. B. Robinson Unit 2 is a Westinghouse pressurized water reactor (PWR) with three reactor coolant loops. A vertical section through the pressure vessel and the reactor is shown in Figure 2.1, and a summary of key design parameters is given in Table 2.1.

The possibility that an overcooling event would lead to a rupture of the pressure vessel depends on (1) the structural integrity of the pressure vessel at the time the event occurs and (2) the relationship between the system pressure and thermal stresses, the latter depending on the magnitude and rate of change of the temperature of the coolant fluid during the event. In turn, the structural integrity of the vessel depends, among other things, upon the neutron fluences to which the vessel walls have been subjected, while the pressure-temperature relationship depends upon the set of circumstances accompanying the overcooling event.

Two factors influencing the neutron fluence levels to which the vessel has been subjected are the geometry of the reactor core within the vessel and the operational history of the unit. Figure 2.2 shows the radial relationship of the H. B. Robinson Unit 2 core to the pressure vessel. Although the core geometry approximates a right circular cylinder, the rectangular shape of the fuel assemblies and the variation of the axial power distribution of the core create a nonuniform pattern of neutron fluxes impinging on the vessel wall. Obviously, some regions of the wall are subjected to higher neutron fluxes than other regions. Also, the nonuniformity of the composition of the wall itself means that the impact of the

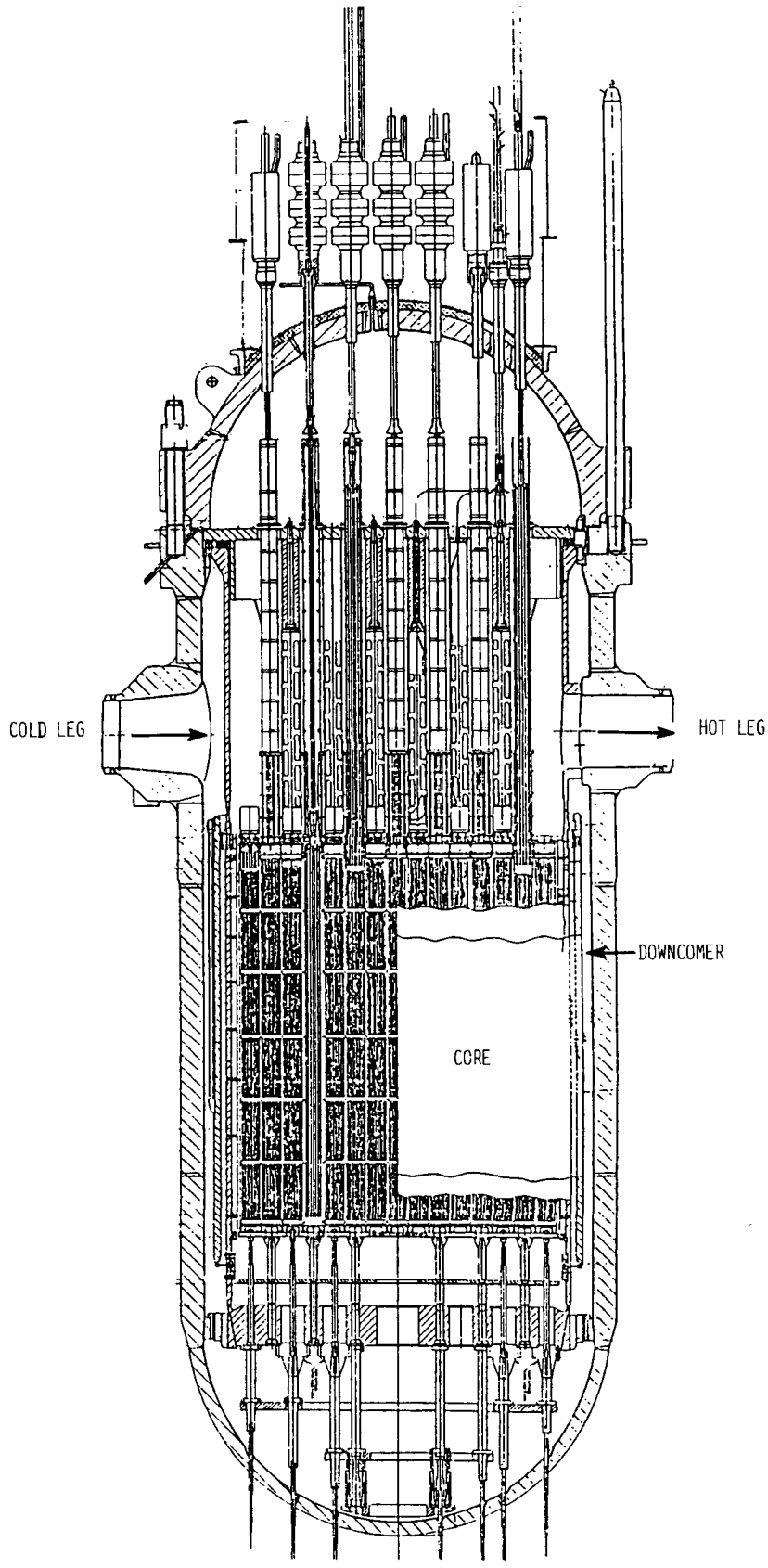

Figure 2.1. Elevation view of reactor and vessel.

Table 2.1. Key reactor design parameters

Parameters	Design Specifications
Number of fuel assemblies	157
Number of control assemblies	45
Equivalent core diameter, in.	120
Active core height, in.	143.8
Number of fuel pins per assembly	204
Fuel composition	Low enriched uranium dioxide
Core volume, ft^3	941
Nominal inlet temperature, °F	547
Primary pressure nominal, psia	2235
Core power at full power, MW(th)	2300
Core power at hot 0% power, MW(th)	8.3
Approximate area of downcomer, ft^2	18.4

fluxes will vary over the wall surface. Of particular interest are the pressure vessel welds, since they differ from the vessel wall in chemical composition and therefore in irradiation sensitivity.

Another factor influencing the neutron fluence levels to which the pressure vessel wall and the welds have been subjected is the enrichment scheme utilized for the reactor. Initially, the assemblies in the outer rows of the core had higher uranium enrichments than those in the inner rows so that the power level across the core would be relatively constant. Concomitant with the higher enrichment, of course, is a neutron leakage in the direction of the vessel wall that is higher than would occur if the outer assemblies had the same enrichment as the inner assemblies. Carolina Power and Light Company has now developed a low-leakage fuel management system that reduces the neutron fluxes to the vessel welds by a factor of about 2. In addition, special assemblies have been developed which contain shielding in the bottom 42 inches. These assemblies provide an additional fluence reduction of a factor of about 5 for the lower circumferential weld for a total reduction factor of approximately 10.

As stated above, the pressure-temperature relationship during an overcooling event would be determined by the set of circumstances accompanying the event. One of the circumstances to be considered is the reactor power level. The reactor power is particularly important since even if the event includes a reactor scram from full power, a significant

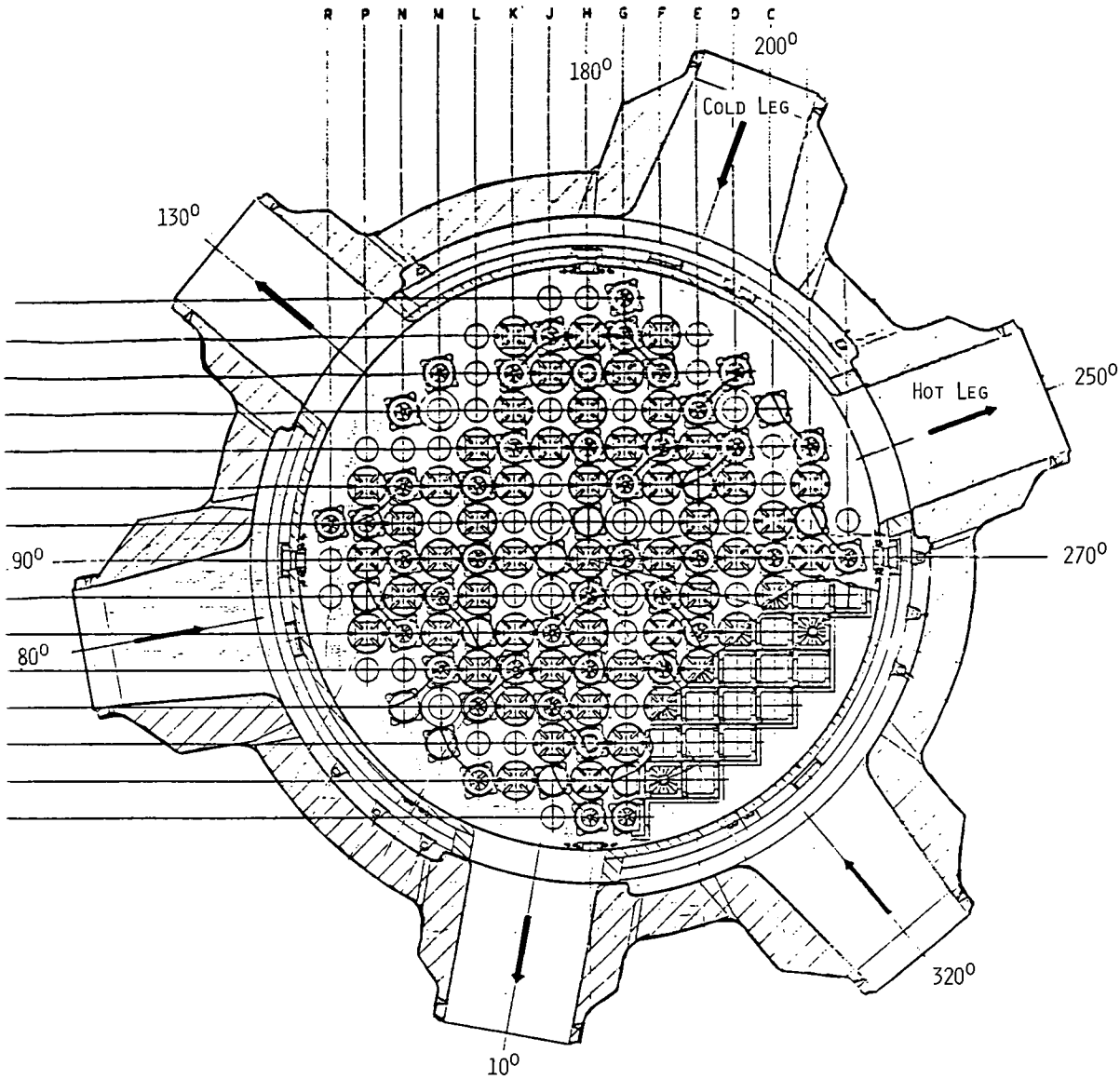

Figure 2.2. Plan view of reactor and vessel.

amount of decay heat would continue to be added to the coolant system. Thus, regardless of the cooling mechanism, some compensating heatup of the system would continue so long as coolant circulation was maintained (by forced or natural circulation). If, however, the overcooling event were to occur at a low decay-heat condition, this mitigating effect would be greatly reduced because the decay-heat level would be low. Hence, overcooling events which occur at a low decay-heat condition would be expected to produce larger rates of primary coolant temperature decrease, as well as lower minimum temperatures. Of course, it must be remembered that the amount of time the plant is in a low decay-heat condition is considerably less than the time it is at or near a high decay-heat condition.

The distribution of the cooler water within the pressure vessel would also be important. The pressure vessel welds located close to the nozzles introducing the cold water could be subjected to greater thermal stresses than those farther from the nozzles. Also, the flow parameters within the downcomer region (see Figs. 2.1 and 2.2) are important with respect to thermal stresses on the welds.

From the above discussion, it is apparent that the mechanical properties of the pressure vessel welds and neutron fluence distribution on the pressure vessel wall and at the weld locations are important factors in predicting a potential PTS event for H. B. Robinson Unit 2. These factors are examined in detail in Chapter 5.

2.3. Reactor Coolant System

The reactor coolant system (RCS) consists of circulating fluid (water) that absorbs heat produced in the reactor core and subsequently transfers the heat to the secondary system to produce steam. The reactor coolant (primary) system contains three heat transfer loops, each of which includes one steam generator and one coolant pump plus connecting piping and instrumentation for flow and temperature measurements. The pipes through which the heated water flows from the reactor vessel to the steam generators are called "hot legs" and the pipes through which the cooled water flows from the steam generators and back into the reactor vessel are called "cold legs." The RCS system also includes a pressurizer that maintains the reactor coolant at a constant pressure. The layout of the piping and instrumentation associated with the reactor coolant system is shown in Figure 2.3, and the design parameters and functions of the various components are described below.

To maintain reactor coolant chemistry within the design limits and to control the pressurizer level, a constant letdown flow from one loop downstream of the reactor coolant pump is maintained. Variable coolant makeup is added by charging pumps in the chemical and volume control system, which is discussed in Section 2.8.

2.3.1. Steam Generator

Each of the three steam generators utilized to transfer the heat generated in the reactor coolant system to the secondary system consists of a primary side and a shell side. The primary side consists of tubes that extend from a hot leg of the RCS and the secondary side consists of a cylindrical annulus (shell) surrounding the central tubes. Secondary fluid (water) entering the shell absorbs heat from the primary fluid flowing through the tubes and is converted to steam.

The design parameters for the primary (tube) side of the three steam generators are shown in Table 2.2. The 2235-psia normal operating pressure within the tubes is 1445 psi greater than the full-power operating pressure on the shell side. The system is designed to handle pressure differences up to 1600 psi, but this does not preclude the possibility of a steam generator tube rupture, as is discussed later in this report.

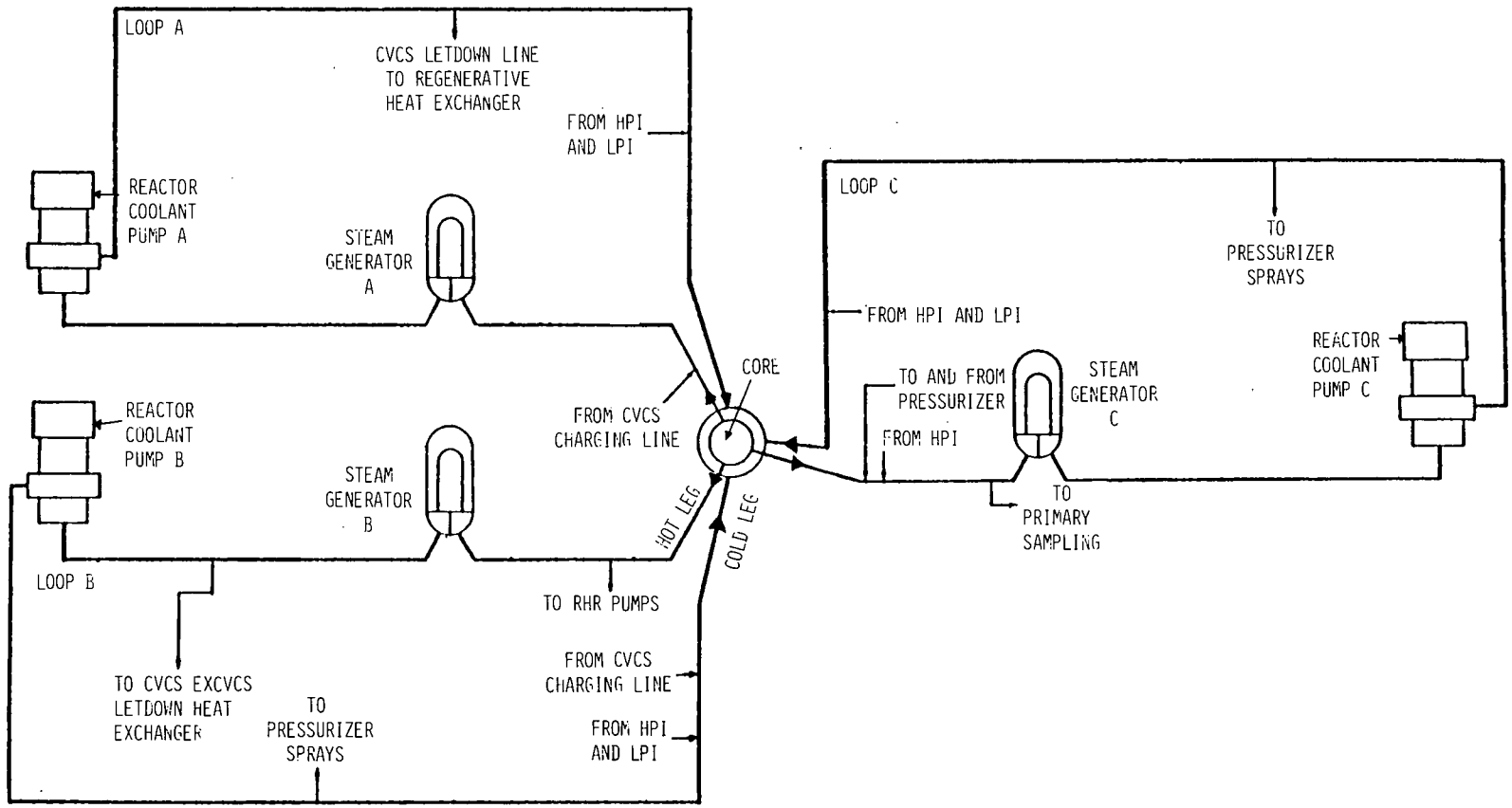

Figure 2.3. Reactor coolant system.

Table 2.2. Steam generator primary (tube) side parameters

Parameters	Design Specifications
Design pressure	2485 psig
Design temperature	650°F
Heat transfer rate	2502.7×10^6 Btu/hr
Coolant inlet temperature	604.2°F
Coolant outlet temperature	546.4°F
Flow rate	33.8×10^6 lb/hr
Pressure drop	32.4 psi

2.3.2. Reactor Coolant Pumps (RCPs)

One reactor coolant pump (RCP) is located in each of the three cold legs. The pumps force water through the reactor vessel, where it serves not only as the coolant but also as the neutron moderator for the reactor core, and then through the three steam generators, where it loses some of its heat before returning to the reactor vessel. The pumps are single-suction centrifugal pumps having the parameters shown in Table 2.3.

The status of the RCPs during overcooling transients is very important. When operating, the pumps themselves add some heat to the system and, in addition, they ensure that adequate mixing occurs in the "downcomer" region of the pressure vessel and that circulation through the core continues. The present procedures require that these pumps be be tripped when reactor coolant pressure reaches 1300 psig and a Safety Injection Actuation Signal has been activated; however, Carolina Power and Light Company is adopting a subcooling criterion as a means for determining when the pumps should be tripped. The new procedures require that the RCPs be tripped when reactor coolant subcooling is <25°F and a safety injection pump (see Section 2.7) is operating. This should allow the operation of the pumps during potential transients associated with secondary system overcooling of the primary system.

2.3.3. Reactor Coolant Piping

The reactor coolant piping connects the steam generators to the reactor vessel, and except in the piping regions where auxiliary systems feed cool water into the primary piping and mixing can occur before the water enters the downcomer region, the piping per se has very little impact on PTS concerns. The principal design parameters for the reactor coolant piping are given in Table 2.4.

Table 2.3. Reactor coolant pump parameters

Parameters	Design Specifications
Number of pumps	3
Design flow rate, each	88,500 gpm
Design head (555°F), nozzle-to-nozzle	266 ft
Casing design pressure	2485 psig
Casing design temperature	650°F
Maximum continuous cooling water inlet temp.	105°F
Discharge nozzle diameter, inside	27.5 in.
Suction nozzle diameter, inside	31.0 in.

Table 2.4. Reactor coolant piping parameters

Parameters	Design Specifications
Number of loops	3
Flow per loop, lb/hr	33.8×10^6
Pipe size	
Reactor outlet (hot leg), ID, in.	29
Reactor inlet (cold leg), ID, in.	27.5
Surge line, nominal, in.	12
Design pressure, psia	2485
Design temperature, °F	650
Velocity hot leg, ft/sec	47.7
Velocity cold leg, ft/sec	48.1

2.3.4. Pressurizer

The pressurizer is connected to one of the hot legs and is the primary means by which the reactor coolant system pressure is maintained. The pressurizer includes pressurizer heaters, two pressurizer sprays, two power-operated relief valves (PZR PORVs), and three ASME spring-loaded safety valves (PZR SVs). Key pressurizer parameters are shown in Table 2.5.

At full-load nominal conditions, slightly more than one-half the pressurizer volume is occupied by saturated water, with the remaining volume filled with saturated steam. These

Table 2.5. Pressurizer parameters

Parameters	Design Specifications
General Parameters	
Internal volume	1300 ft^3
Design pressure	2485 psig
Design temperature	680°F
Steam volume, full power	520 ft^3
Water volume, full power	780 ft^3
Heaters	
Total	1300 kW
Control group	400 kW
Backup group No. 1	450 kW
Backup group No. 2	450 kW
Pressurizer Sprays	
Number	2
Continuous spray rate	1 gpm
Temperature of spray	555°F
Design flow, each, at spray temperature	300 gpm
Power-Operated Relief Valves (PZR PORVs)	
Number	2
Relief capacity per value	210,000 lb/hr
Set pressure	2335 psig
Pressurizer Safety Valves (PZR SVs)	
Number	3
Relief capacity	288,000 lb/hr
Set pressure, first valve	2485 psig
second valve	2485 psig
third valve	2485 psig
Back pressure, normal	3 psig
relieving (maximum)	350 psig

steam and water sections are in thermal equilibrium at the saturation temperature corresponding to the desired system pressure. The pressurizer is located with its base at a higher elevation than the reactor coolant loop piping. In the case of reactor coolant system contraction, this location assures that the pressurizer must drain before voiding in the coolant pipes can occur, thus limiting the amount of voiding in the reactor coolant pipes and reactor vessel.

Within the pressurizer, pressure variations caused by contraction or expansion of the reactor coolant system are controlled by use of the pressurizer heaters (to produce steam) and the pressurizer sprays (to condense steam). The heaters are single-unit direct-immersion heaters which protrude vertically into the pressurizer through sleeves welded in the lower head. Approximately 30% of the heaters are connected to proportional controllers which

adjust the heat input as required to account for steady-state losses and to maintain the desired steam pressure. The remaining heaters normally remain off but are turned on by a pressurizer low-pressure signal or high-level error signal. A pressurizer low-low level signal de-energizes all heaters to prevent heater burnout due to uncovering of the heater region.

Pressurizer spray water is supplied from two cold legs. The water is taken out of the cold legs at points downstream of the reactor coolant pumps near the entrances of the cold legs into the reactor vessel. Automatic spray-control valves regulate the amount of spray as a function of pressurizer pressure. A small continuous flow is maintained through the spray lines at all times to keep the spray lines warm, thus reducing the effects of thermal shock in the spray lines during plant transients. If the reactor coolant pumps are shut down, which they will be following most overcooling events,* the PZR PORVs and/or the auxiliary spray line must be used to control pressure. Water is supplied for the auxiliary spray from the chemical and volume control system (see Section 2.8).

The two PZR PORVs release sufficient pressurizer steam during abnormal operating occurrences to prevent opening of the PZR SVs. The PZR PORVs are solenoid-operated valves and are located in parallel pipes that are connected to the pressurizer relief valve nozzle on the inlet side and to the relief line piping of the pressurizer relief tank on the outlet side. A motor-actuated isolation valve is provided to permit isolation of the PZR PORVs in the case of valve failure. The steam discharged by the PZR PORVs is cooled and condensed by water in a relief tank.

The three PZR SVs provide protection from overpressure in the reactor coolant system. These valves are totally enclosed and are back-pressure compensated. Since these valves are safety valves, they cannot be isolated downstream. Thus, if one of the PZR SVs fails mechanically in the open position, the system cannot be isolated.

During a significant overcooling event, the pressurizer level will drop rapidly, even to the point of being off scale, and the pressurizer heaters will be turned off automatically. At this point and until the level is recovered, the pressurizer has no effect on the event. With the exception of a large LOCA event, the level in the pressurizer eventually will be recovered owing to increased coolant volume from the safety injection systems, the charging flow, and possibly thermal expansion. The control heaters will automatically come on with restoration of level and will have the potential to increase pressure more rapidly. However, the heaters and spray valves are automatically controlled by pressure. As the pressure increases, heaters turn off and sprays are actuated. In the event of a failure of this controlling system, the pressure will increase to the PZR PORV lift set point (2350 psia) for some of the events analyzed without some form of manual intervention to control pressure.†

---

*This is based on the present procedures which call for the manual tripping of the reactor coolant pumps following a safety injection actuation signal when pressure decreases to 1300 psig. Under proposed new procedures, the reactor coolant pumps may remain running during many of the overcooling events.

†It should be noted that manual operation of the PORVs or the use of the letdown line could also relieve pressure. However, we did not consider the PORV since there is at least some reluctance on the part of operators to manually open it. The letdown line is not considered because the letdown line automatically isolates until the safety injection signal is cleared. Thus, it is improbable that the letdown line would be activated in time to prevent initial repressurization. This does not preclude the use of the letdown line to reduce pressure after initial repressurization occurs.

2.4. Main Steam System

A simplified diagram of the steam and power conversion system is shown in Figure 2.4. The main steam system is composed of three steam generators, one high-pressure turbine, two low-pressure turbines, and the steam lines and valves which connect these major components.

Subcooled main feedwater enters (vertically downward) the secondary side of each U-tube steam generator through a feedwater nozzle and a feedwater ring at a level just above the tube bundle. It exits the top of the feedwater ring through apertures fitted with 90° elbows and flows downward through the downcomer before being channeled inward and through the U-tube bundle region. Energy is transferred from the primary fluid in the U-tubes to the secondary fluid as it flows upward outside the U-tubes, and a steam-water mixture is formed. This steam-water mixture then passes through steam separators and driers before leaving with a steam quality of 99.75%. The separated water returns to mix with the feedwater for another pass through the tube bundle region.

Saturated steam exits each steam generator and travels through its main steam line past the flow-limiting orifices, atmospheric dump valves, auxiliary feed pump turbine steam supply lines, safety relief valves (SRVs), main steam isolation valves (MSIVs), check valves, and steam generator cross-connect to several possible destinations. These destinations could be either the condenser via the steam dump lines (an atypical flow path except at low power), the tube sides of the second stage of the moisture/separator reheater assemblies, or the high-pressure turbine through the turbine stop/control valves. Four safety valves and one relief valve exist on the main steam line associated with each steam generator to provide pressure relief. Additional details of these elements are shown in Figure 2.4.

After passing through the high-pressure turbine, a steam-water mixture (cold reheat) leaves the high-pressure turbine and enters the shell side of the moisture separator reheater assemblies and also the shell side of the low-pressure condensate heaters. Steam-water mixtures also leave the high-pressure turbine through extraction lines to enter the shell side of the high-pressure feedwater heaters. Steam enters the tube sides of the moisture/separator reheaters from the main steam lines and, after giving up its thermal energy, is condensed and continues as water to the shell side of high-pressure feedwater heaters (see Figure 2.5). The steam-water mixture entering the shell side of the moisture/separator reheaters from the high-pressure turbine exhaust is divided into a vapor phase which exits to the low-pressure turbines and a liquid phase which arrives at the heater drain tanks. Steam enters the low-pressure turbines which exhaust to the shell side of the condenser, where the steam is condensed and collected in the hotwells. The condenser/hotwell reservoirs may be supplemented by the condensate storage tanks if level falls below a pre-set level. Various stage extraction lines connect the low-pressure turbine to the shell side of the low-pressure feedwater heaters.

2.4.1. Steam Generator

The principal design parameters of the steam generators are given in Table 2.6. It should be noted that the steam generator water inventory is ~40% higher at hot 0% power than it is at full power. This, plus the lower decay-heat level of hot 0% power, makes it an important condition for analysis of steam-line breaks.

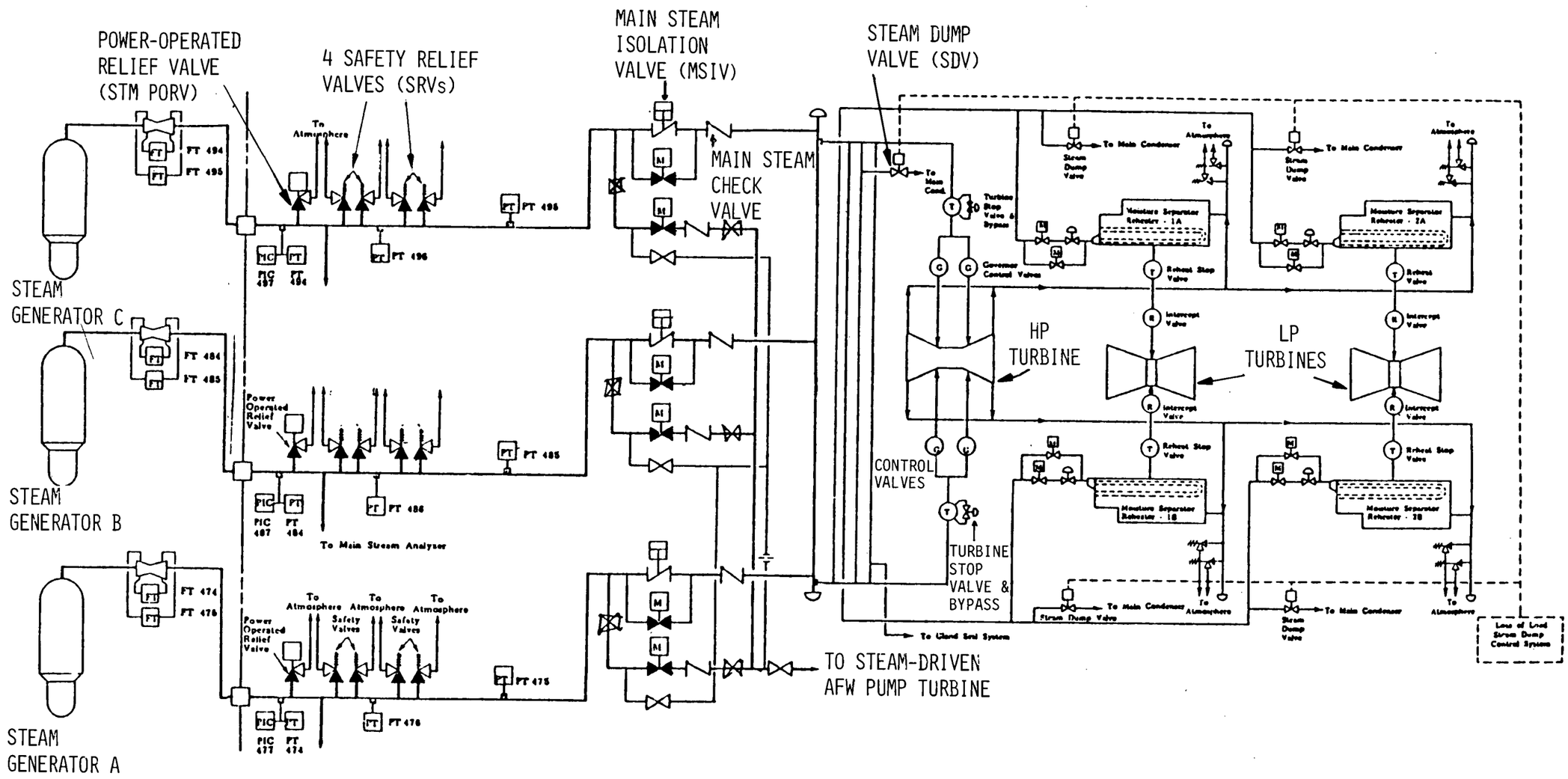

Figure 2.4. Steam and power conversion system.

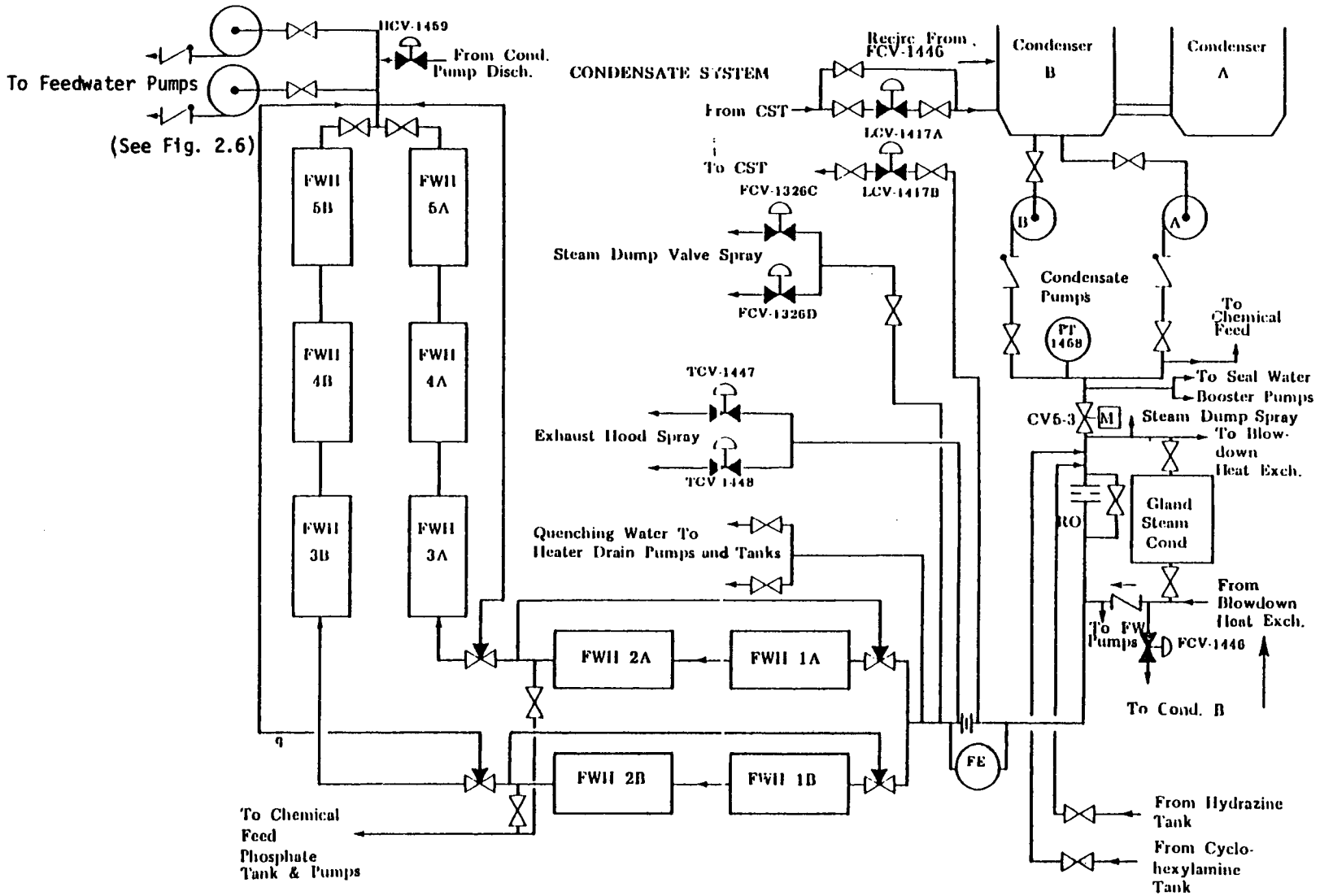

Figure 2.5. Condensate system.

Table 2.6. Principal design parameters of the steam generators

Parameters	Design Specifications
Number of units	3
Tube side design pressure, psig	2485
Tube side design temperature, °F	650
Tube side design flow, lb/hr	33×10^6
Shell side design pressure, psig	1085
Shell side design temperature, °F	556
Operating pressure, tube side, nominal, psig	2235
Operating pressure, shell side, maximum, psig	790
Maximum moisture at outlet at full load, %	0.25
Steam pressure, psia at full power	790
Steam temperature, °F, at full power	516
Nominal water inventory at full power, kg	42,000
Nominal water inventory at hot 0% power, kg	58,000

2.4.2. Turbine-Generator

The turbines are 1800-rpm tandem compound axial flow outdoor units. Saturated steam is supplied to the turbine from the steam generators through two stop valves and four governing control valves. The steam flows through a two-flow high-pressure turbine and then through combination moisture/separator reheaters (four in parallel) to two double-flow, low-pressure turbines which exhaust to the main condenser system.

Each turbine is equipped with an automatic stop and emergency trip system which trips the stop and control valves to a closed position in the event of turbine overspeed, low bearing oil pressure, low vacuum, or thrust bearing failure. An electric solenoid trip is provided for remote manual trips and for various automatic trips.

The turbine generator can be involved in the initiation of an overcooling event. If the turbine fails to trip (stop valves and control valves stay open) following a reactor trip, steam will continue to be demanded and a blowdown of all three steam generators will occur until the MSIVs close. For analysis purposes, this event will resemble a large steam-line break downstream of the MSIVs.

2.4.3. Steam Dump System (Condenser Dump System)

The steam dump system consists of five steam dump valves (SDVs) located downstream of the MSIVs which exhaust to the main condenser. The steam dump system is normally used to rapidly remove the reactor coolant system's stored energy and to limit secondary steam pressure following a turbine trip. In the event of a turbine trip with the steam dump valves in T_{avg} control, a quick-opening signal is provided on loss of load to open the valves until the reactor coolant average temperature signal begins to modulate them. If a loss of load signal is not generated, the valves modulate open as needed. The valves are modulated by reactor coolant average temperature until they are manually switched to the steam pressure control mode. The steam flow capacity of each steam dump valve is ~8%, making the total capacity of the steam dump system 40% of full power steam flow.

The failure of one or more of these valves to close could result in a greater than normal cooldown rate. The failure of one steam dump valve to close resembles a small steam-line break while the failure of all five valves will resemble a large steam-line break. Upon failure of one or more valves to close, the valve(s) can be isolated by closure of the MSIVs.*

2.4.4. Steam PORV System

The steam PORV system on H. B. Robinson Unit 2 consists of three power-operated relief valves (one on each steam line) which exhaust to the atmosphere. As shown in Figure 2.4, the STM PORVs are located downstream of the flow orifices (flow restrictors) but upstream of the SRVs and the MSIVs. The steam PORV system has the capability of performing, to a lesser extent, the same function as the steam dump system. However, the removal of reactor decay heat via the steam PORV system is not a normal mode of operation. As long as the main condenser vacuum is maintained, the SDVs will be used to remove the reactor decay heat until the shutdown cooling system can be initiated. In the event of a loss of condenser vacuum or in the event of MSIV closure, the SDVs would not be available and the STM PORVs would then be the means by which steam generated by the reactor decay heat would be exhausted.

The STM PORVs are positioned by the reactor coolant average temperature error signal or, during shutdown, by the steam pressure signal. They modulate open on high steam pressure at trips from power levels above 70%. (At a 70% power level or below, the STM PORVs are not armed to trip if the turbine trips.) Each STM PORV can relieve 3.3% of full power steam flow.

The failure of a STM PORV to close can also result in an abnormal cooldown rate, which, however, would be smaller than that occurring with the failure of an SDV since the steam flow would be smaller. But unlike the SDV, the STM PORV cannot be isolated because it is upstream of the MSIV and does not have a block valve. Thus, in comparison to a failed-open SDV, a failed-open STM PORV would result in a potentially longer cooldown period.

---

*Manual closure of a SDV is preferred since the closure of the MSIVs will require the use of the steam PORVs to exhaust stored energy due to reactor decay heat to the atmosphere.

2.4.5. Main Steam Check Valves

Although the main steam check valves are located downstream of the main steam isolation valves, they are described here because the explanation of the main steam isolation valves is thus simplified.

The main steam check valves are swing-disc valves and are provided to prevent backflow of steam in the event of a steam-line break in the containment. Thus, in this event, only one steam generator will blow down to the containment, the check valve on the affected line preventing backflow from the other two generators. For this reason, the main steam check valves are very important in PTS analysis.

2.4.6. Main Steam-Line Isolation Valves

One main steam-line isolation valve (MSIV) is provided on each of the main steam lines. In the event of a high steam flow event (steam-line break, etc.), the closure of the MSIVs will prevent or limit the amount of blowdown of water stored in the shell side of the steam generators. This avoids or limits the potential rapid uncontrolled cooldown of the reactor coolant system associated with excessive steam demand events. During normal operation, these valves remain open; they close upon the occurrence of (1) a high steam flow signal coincident with either low average reactor coolant temperature or low steam pressure, (2) a high-high containment pressure, or (3) manual actuation. The MSIVs can also perform the same function as the check valves in the event of a steam-line break upstream of the valves, but they cannot respond as rapidly or reliably as the check valves because the signal for MSIV closure may not be generated for smaller line breaks.

The closure of an MSIV has a similar effect on both a stuck-open STM PORV and a stuck-open steam-line SRV. Since the STM PORV and SRVs are upstream of the MSIV, the closure of the MSIV will not prevent the blowdown of one steam generator, but it will isolate the affected steam line and thus prevent the blowdown of the other two steam generators in the event of a check valve failure.

The role of the MSIVs is somewhat different in the case of a steam dump valve failure or a steam-line break downstream of the MSIV. If the MSIVs close, the excessive steam demand is terminated along with its cooldown effects. If one MSIV fails to close, the excessive steam demand event will resemble a steam-line break upstream of the MSIV and will involve the blowdown of one steam generator.

2.4.7. Steam Pressure Safety Relief Valves

Overpressure protection for the shell side of the steam generators and the main steam-line piping up to the inlet of the turbine stop valve is provided by 12 spring-loaded ASME Code safety valves which discharge to the atmosphere. Four of these safety relief valves (SRVs) are mounted on each of the main steam lines upstream of the MSIVs but outside the containment. The pressure relief system is designed to pass a steam flow equivalent to full power level at the nominal set pressure. The SRVs on each line are grouped in sets of two with varying set points from 1085 psig to 1140 psig.

The maximum steam flow through an SRV is just slightly less than that allowed by an SDV. Thus a stuck-open SRV event would look very similar to a stuck-open SDV event with the exception that the SRV is upstream of the MSIV and thus affects only one steam generator in most instances. Also, since the SRV is an ASME Code safety valve, there is no means by which the valve can be isolated. Thus for a failed-open SRV, it is very possible that the event will involve a complete blowdown of a single steam generator.

2.4.8. Flow Restrictions

There is a critical flow orifice inside containment just downstream of the steam generators on each of the three steam lines. These orifices serve as flow restrictors and are designed to limit the flow rate in the event of a main steam rupture downstream of the restrictors to approximately 120% of the normal flow rate in one steam line. Thus, the flow restrictors serve a very important function by limiting the cooldown which could result from a large steam-line break. Without the flow restrictor, a full guillotine steam-line break could have a blowdown rate that would be nearly three times larger than it would be with the flow restrictor. Although not directly proportional, there would be a similar increase in the cooldown rate associated with the event. The H. B. Robinson system has two types of flow restrictors: those installed in the pipes and those installed in the nozzles of the new steam generators. The restrictors in the steam generator nozzles are the smaller of the two types and thus the limiting feature. These nozzle restrictors make the full guillotine steam-line break upstream of the MSIVs appear similar to a break which is no larger than 1.4 square feet.

2.5. Main Condensate and Feedwater System

The prime function of the main condensate and feedwater system, illustrated in Figure 2.6, is to transport condensed steam from the condenser/hotwell and condensate storage tank outlets to the steam generator main feedwater inlets while both pressurizing and heating it. A second obvious function of this system is to control the quantity of feedwater reaching the secondary side of each steam generator. The condensate and feedwater system consists of: the condensate storage tanks, the condenser, condensate pumps, low-pressure heaters, main feedwater pumps, high-pressure heaters, main feedwater block valves, main flow control valves, and bypass flow control valves. Low-pressure steam is exhausted from the turbine system to the main condenser. In the main condenser the steam is passed over condenser tubes which contain plant circulating water pumped from Lake Robinson. The condensed liquid is collected at the bottom of the condenser in a region known as the condenser hotwell. If makeup water is desired, it is supplied to the condenser via the condensate storage tank. Two electric-motor-driven condensate pumps draw suction from the condenser hotwell and pump the water through five pairs of parallel low-pressure heaters. The heat source for the first four pairs of heaters is extraction steam from various stages of the low pressure turbines, and for the fifth pair the heat source is the high pressure turbine exhaust. Heated condensate now travels to the two parallel motor-driven main feed pumps whose purpose is to provide final pressurization of the feedwater to the desired delivery pressure at the steam generator main feedwater inlets while overcoming the frictional losses in the high-pressure feedwater heaters and main/bypass

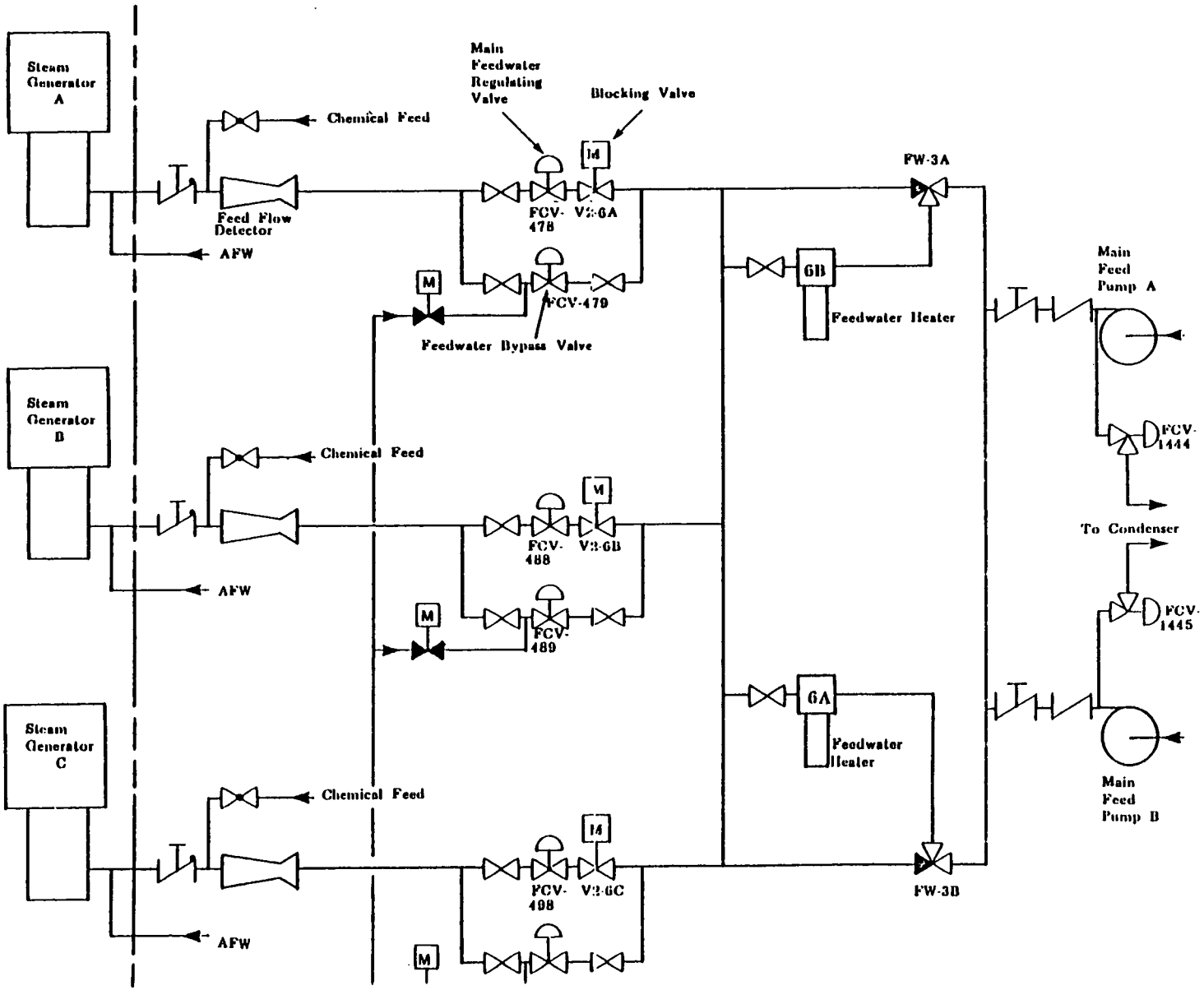

Figure 2.6. Feedwater system.

control valves. Departing the common main feed pump discharge header, the feedwater is heated to the desired delivery temperature by two parallel high-pressure feedwater heaters. The high-temperature high-pressure subcooled feedwater is recombined in the high-pressure feedwater heater outlet header before being divided into three lines, each containing an isolation valve followed by a main control valve in parallel with a bypass control valve. The feedwater then flows through check valves, through metering orifices, and to the steam generator main feedwater inlets.

2.5.1. Condensate Storage Tank

The condensate storage tank provides makeup water to the condenser and also provides the primary source of water for the auxiliary feedwater system. The condensate storage tank provides up to 200,000 gallons of water at a temperature which varies throughout the year. The low-temperature condensate storage tank makeup water has very little effect on condensate temperature since the relative volume of makeup required is small. However, since the condensate storage tank supplies water for the auxiliary feedwater system, the temperature of condensate storage tank water will have an impact on the cooldown rate whenever the auxiliary feedwater system is actuated.

2.5.2. The Condenser

In the condenser, the exhaust steam from the turbines is condensed by the circulating water taken from Lake Robinson. The temperature of this circulating water, as with the condensate storage tank water, will vary throughout the year. However, condenser temperature should not have an effect on cooldown rate as long as the feedwater heaters are operating.

2.5.3. Condensate Pumps

The two electric-motor-driven condensate pumps provide the pressure (about 500 to 600 psi) required to pump the main feedwater through the feedwater heaters and to prevent boiling in the feedwater heaters. Loss of all the condensate pumps will result in loss of main feedwater. The discharge pressure of the condensate pumps is inadequate to provide water to the steam generators without the main feedwater pumps in operation unless the steam system is depressurized to a very low pressure. In such a case, the feedwater valves are very likely to have been closed. The pumps have essentially no effect on PTS events unless their loss causes auxiliary feedwater operation.

2.5.4. Feedwater Heaters

The high- and low-pressure heaters use steam extracted from the high- and low-pressure turbines respectively to increase the temperature of the feedwater. This heating system raises the temperature of the feedwater by as much as 420°F. Steam supplies to these heaters will be lost following any turbine trip. One might expect that the loss of all

feedwater heaters could result in a substantial cooldown effect. However, as will be shown later in this report, the process is slowed by the thermal inertia of the significant amount of steel in the feedwater system.

2.5.5. Main Feedwater Pumps

Forced flow to the steam generators is supplied by two motor-driven main feedwater (MFW) pumps. Loss of main feedwater pump(s) will result in loss of main feedwater and the actuation of auxiliary feedwater.

It should also be noted that a safeguards actuation signal will trip these pumps. Thus the main feedwater pumps are expected to trip in the event of any overcooling event which results in safety injection actuation.

2.5.6. Feedwater Control Valves and Bypass Valves

The regulating valves control the feedwater flow to each steam generator. The difference between the feedwater and steam flow is adjusted by a steam-generator-level error indication and then used to define the control valve position. Following a reactor trip, this valve will automatically close and the bypass valve will be opened manually. The bypass valve has a maximum flow rate of about 15% of the nominal main feed flow rate. As part of the reactor trip run-back sequence, this valve will be manually opened to a predetermined set point based on feedwater required to maintain steam generator level. At hot 0% power, the feedwater flow control valves are closed and the bypass valves are manually controlled, at about 1% flow, to maintain steam generator level.

2.5.7. Main Feedwater Isolation Valve

There is one main feedwater isolation valve (MFIV) just prior to the regulating valve on each of the three lines. These valves can be closed manually or automatically and are used to isolate main feedwater flow to the steam generator. These valves will close automatically when a safety injection signal is generated.

2.6. Auxiliary Feedwater System

The auxiliary feedwater (AFW) system supplies condensate storage tank water to the steam generators on demand. This is necessary to maintain an adequate heat sink to dissipate reactor decay heat when the normal feedwater supply is unavailable. The auxiliary feedwater system, as shown in Figure 2.7, consists of three auxiliary feedwater pumps, control valves, and block valves. Two of the pumps are motor driven and one is steam turbine driven. The sources of water for the auxiliary feedwater system are, in order of preference, the condensate storage tank, service water, and water from deep wells.

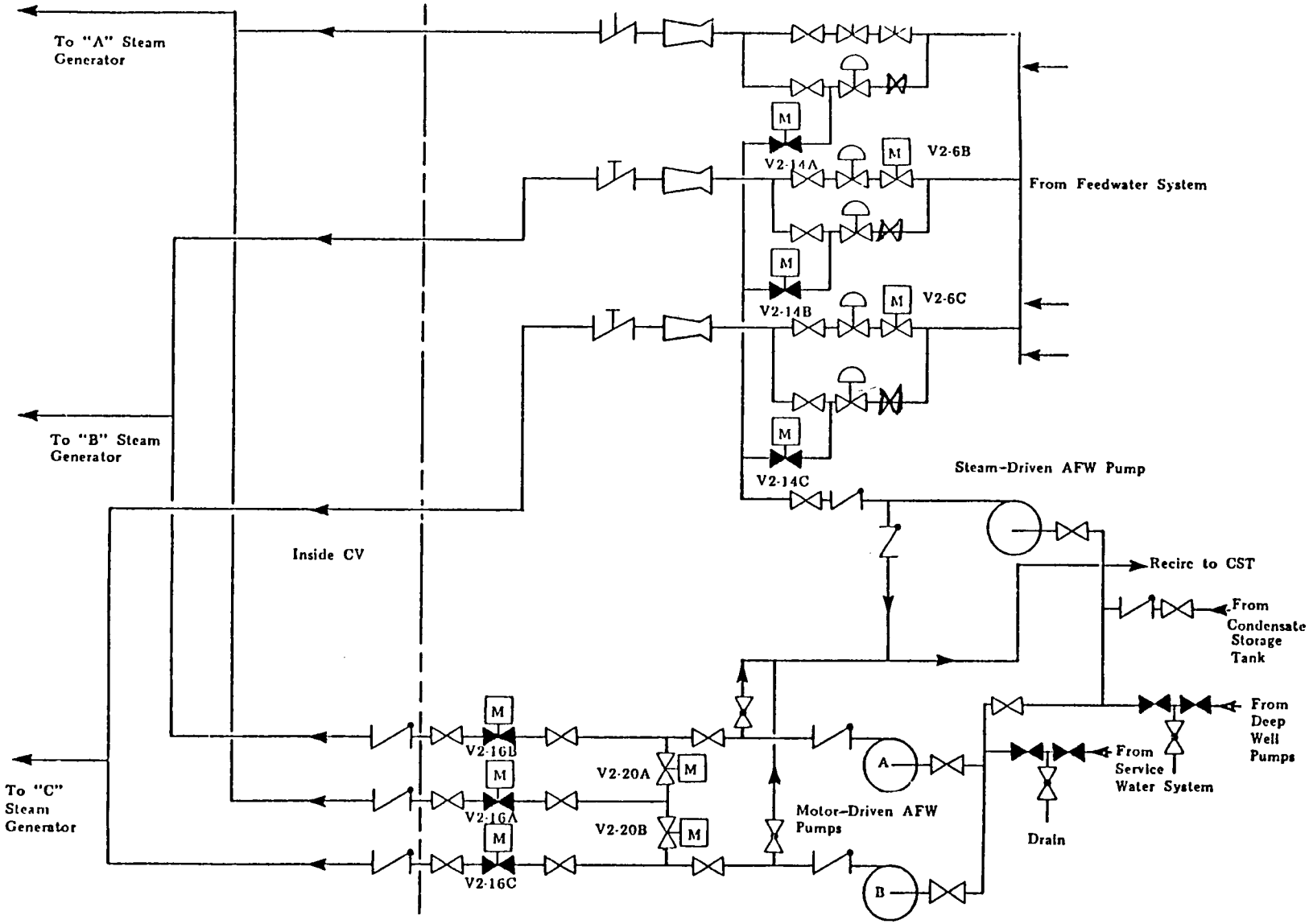

Figure 2.7. Auxiliary feedwater system.

2.6.1 Auxiliary Feedwater Pumps

There are three auxiliary feedwater pumps, two motor-driven pumps and one turbine-driven pump. A single motor-driven pump supplies a minimum of 300 gpm of condensate storage water to the steam generators. The motor-driven AFW pumps discharge through motor-driven block valves directly upstream of the steam generator feedwater inlets.

The capacity of the steam-driven AFW pump (600 gpm) is based on preventing the water level in the steam generators from receding below the lowest level within the indicated level range in the event of a loss of offsite power. This will prevent the tubes from being uncovered. A signal indicating a low-low level in 2 out of 3 SGs or a direct signal of loss of power to the main feedwater pumps will automatically start the steam-driven AFW pump by opening steam admission valves and auxiliary feedwater discharge valves which direct flow to the feedwater bypass lines. The initiating signals for starting the motor-driven AFW pumps are loss of voltage to both main feedwater pumps, low water level in any steam generator, station blackout, or initiation of a safeguard actuation signal. No operator action is required, although at some time it may be desirable to manually trip the flow to the individual steam generators. Provision is made in the control room for control of flow from the individual AFW pumps.

2.6.2. Auxiliary Feedwater Control

Control of auxiliary feedwater flow is based on a constant, predetermined flow rate from each pump. Flow from the pumps is controlled using flow control valves. The output of the turbine-driven pump can also be varied by throttling the steam supply. If necessary, flow to individual steam generators may be manually controlled.

2.6.3. Auxiliary Feedwater Block Valves

There are block valves on each of the auxiliary feedwater lines to the steam generators. These block valves are used to isolate auxiliary feedwater flow to any combination of steam generators. These valves can be closed manually by the operator in the control room.

During a steam-line break, pressure in the steam lines and steam generators will begin to decrease. If the break is downstream of the MSIVs, the break can be isolated and pressure in the steam generators will begin to recover. However, if the break is upstream of the MSIVs, two steam generators can be isolated while the other cannot. The block valves on the auxiliary feedwater lines leading to the steam generator with the low pressure can be closed by the operator. Since the motor- and steam-driven AFW pumps utilize separate discharge flow paths, two separate block valves must be closed to isolate an impacted steam generator. This will isolate the break from all auxiliary feedwater supplies and will eventually result in the dryout of the steam generator on the broken line. This closure of the block valve limits the cooldown due to the steam-line break to the blowdown of the affected steam generator inventory available up to the time when auxiliary feedwater is isolated.

2.7. Safety Injection System

The safety injection system is designed to supply borated water to the reactor core in the event of a loss of adequate coolant. The system consists of two trains containing a total of three high-pressure injection pumps, two low-pressure injection systems, and three accumulators. The piping and instrument diagram for these systems is shown in Figure 2.8.

Safety injection is actuated by low pressurizer pressure, high containment pressure, high steam-line differential pressure, or high steam flow with low steam-line pressure or low T_{avg}. The actuation signal causes the two low-pressure and the three high-pressure injection pumps to start. In addition, all safety injection isolation valves open, allowing a clear flow path from the refueling water storage tank to the reactor coolant system. A heating system heats water to an average temperature of 90°F.

2.7.1. High-Pressure Injection System

The high-pressure injection (HPI) system is composed of three high-pressure injection pumps that take suction from a header that is supplied with borated water from the refueling water tank.* Each high-pressure pump can deliver a design flow of 375 gpm with a shutoff head of 1500 psia. Flow from each pump enters a common line that splits into three lines, each going to one of the three cold legs of the primary coolant system. In addition, the high-pressure injection system will enhance the rate at which the system depressurizes and repressurizes. With respect to the high head pressure (normally, 2200 to 2300 psia) HPI systems found at some other plants, the relatively low head (1500 psi) HPI system at H. B. Robinson should have less of an effect on potential pressurized thermal shock events. That is, the HPI system cannot, in itself, fully repressurize the system. Also for a given transient, it may provide flow later and cut off flow sooner than the higher head pressure HPI systems and thus reduce the net amount of cold water injected into the system.

2.7.2. Low-Pressure Injection System

The low-pressure injection (LPI) system consists of the two low-pressure safety injection pumps (the residual heat removal pumps), which take suction from the same suction header that serves the high-pressure injection pumps. These low-pressure pumps can each supply a design flow of 3000 gpm and have a shutoff head of about 175 psia. Flow from both low-pressure pumps enters a common line that splits into three lines emptying into the same injection lines used by the high-pressure injection system.

This system is not expected to have a major pressurized thermal shock impact since the maximum pressure is so low. Only large LOCA events are expected to reduce the system pressure enough to allow low-pressure injection. In the case of a large LOCA, the pressure will be low and repressurization cannot be accomplished.

---

*The refueling water tank can supply up to 353,000 gallons of water. In the event of a LOCA transient, this capacity may be exhausted. Under these circumstances the HPI and LPI pumps may utilize the containment sump as a source.

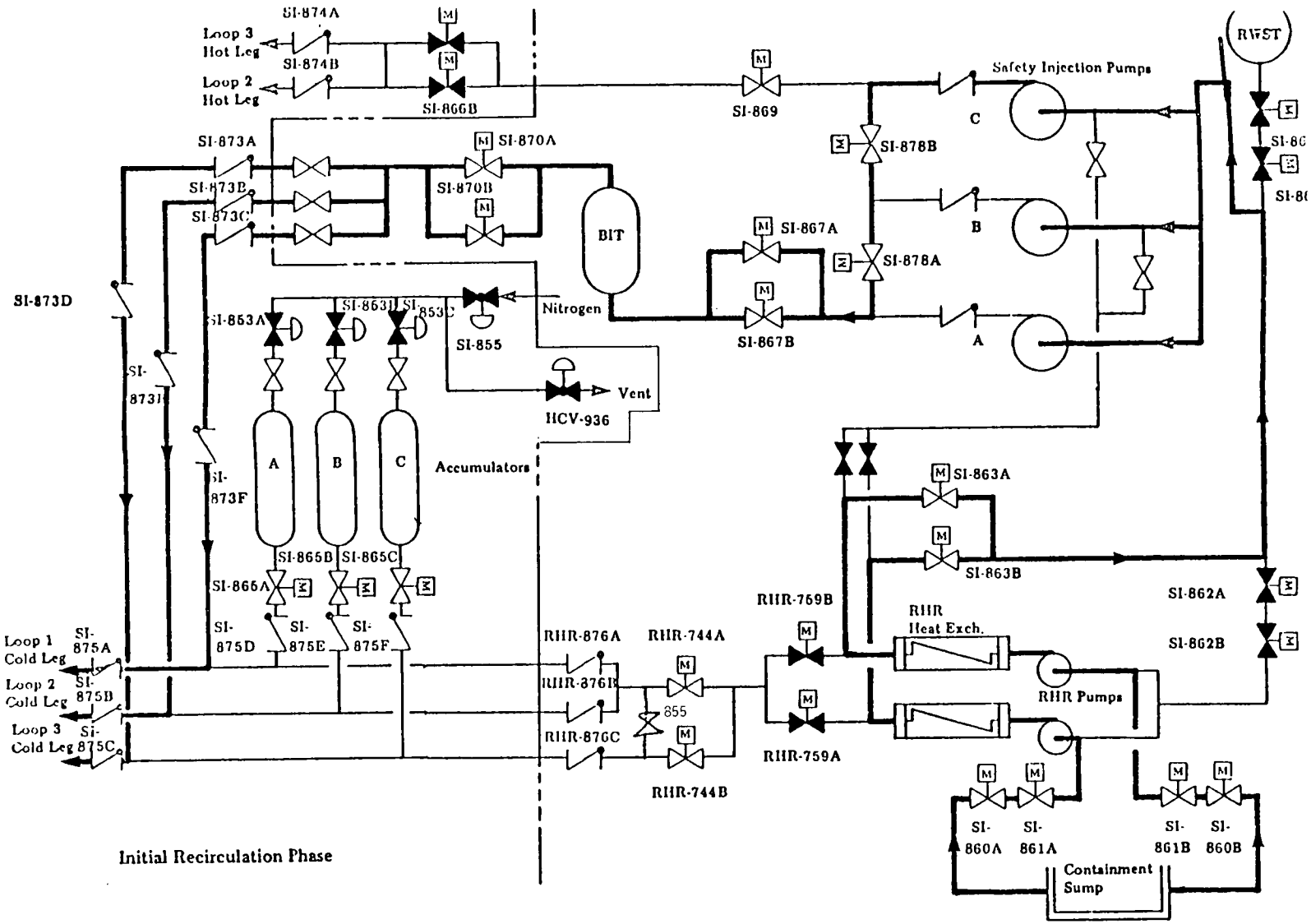

Figure 2.8. Emergency core cooling system.

2.7.3. Accumulators

There are three accumulators that can also supply water to the reactor coolant system. Each of these tanks is connected to one of the injection lines used by both the high-pressure and the low-pressure injection systems and isolated from the reactor coolant system only by check valves. Each tank is located above the elevation of the cold legs and the tie-in is just ahead of the injection nozzle port. The driving head of 600 to 660 psig for water injection from the safety injection tanks is provided by nitrogen gas pressure within the tanks and the gravity head of the water within the tanks. The tanks operate as a passive stored-energy safety feature (i.e., no outside power or signal is required for their operation). Each tank can supply a minimum of 825 ft^3 of water.

2.8. Chemical and Volume Control System

A simplified block diagram of the chemical and volume control system (CVCS) is shown in Figure 2.9. With respect to the PTS analysis, the primary components are the letdown isolation valve, the letdown flow control valve, the charging pumps, and the regenerative heat exchanger. These components control the volumetric flow of the letdown line and the temperature of the water that reenters the reactor coolant system.

2.8.1. Letdown Isolation Valves

The letdown line comes off the cold leg loop just ahead of the reactor coolant pump. There are two stop valves or isolation valves on the letdown line just beyond the extraction point. Following a pressurizer low level signal, which is generated on any significant overcooling event, the letdown line is isolated by the automatic closure of both stop valves. With respect to PTS, this serves two purposes:

(1) The stoppage of letdown will prevent further reduction of coolant volume in the primary system. Any overcooling event results in a shrinkage of the primary system coolant volume. The cooldown rate is enhanced by the use of HPI water (relatively cold water) to recover from the shrinkage. The isolation of letdown removes one source of volume reduction from the system.

(2) The automatic isolation of the letdown line on pressurizer low level will also isolate a potential break in the letdown line and limit the cooldown effects which might be associated with such a break.

2.8.2. Letdown Flow Controllers

During normal operation the letdown line flow rate is nominally 60 gpm. The pressurizer level control program regulates the charging pump speed so that the reactor coolant pump seal leakage plus the letdown flow matches the input from the operating charging pump. There are three letdown control valves in parallel lines, which can supply a maximum of 120 gpm of letdown flow.

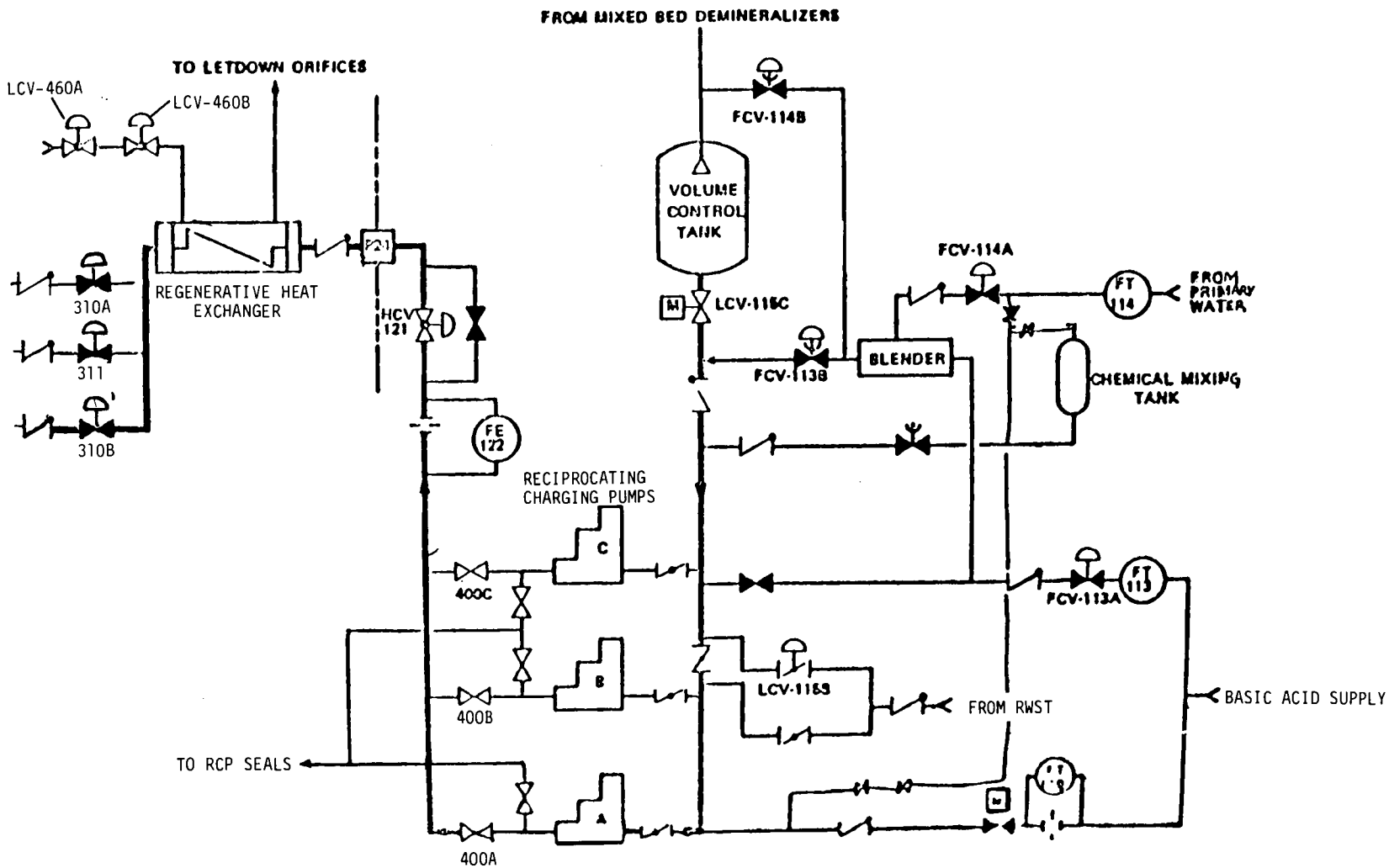

Figure 2.9. Chemical and volume control system.

2.8.3. Charging Pumps

Three positive displacement charging pumps, with variable speed drives, supply makeup water from the volume control tank to the reactor coolant system. During an overcooling transient, the pressurizer level control system will automatically increase the speed of all charging pumps on automatic control to maximum. Ordinarily, only one charging pump is on automatic control. When pressurizer level is recovered, the charging pump speed is controlled to maintain level.

Each charging pump has a design flow of 77 gpm. When all three charging pumps are on, 231 gpm of flow can be supplied to the reactor coolant system up to a pressure of 2500 psi.* This has special significance for analysis of pressurized thermal shock since the HPI system has a relatively low shutoff head pressure (1500 psig). In this instance, the charging pumps become the primary mechanism by which full repressurization would occur for those transients in which repressurization can occur. Without operator action, these charging pumps will take the system from 1500 psig to the pressure corresponding to normal pressurizer level in those cases where repressurization is possible. This could have a significant effect on the consequences of an overcooling transient.

2.8.4. Regenerative Heat Exchanger

The regenerative heat exchanger raises the temperature of the charging flow water just before it enters the main reactor coolant loops. Letdown line water,† just after extraction from the primary cold loop, is used as a heat source. Charging flow water is heated, during normal operation, from 130°F to 493°F within this heat exchanger. A loss of this heat exchanger could result in a substantial reduction of the charging flow water temperature which re-enters the coolant system. This, however, is not expected to have an adverse effect on the system since the normal flow rate is only 45 gpm in comparison with a normal primary system loop flow of at least 70,000 gpm with the pumps in operation.‡

2.9. Support Systems

Support system failures can be of importance because single support system failures can trigger multiple failures of components in other systems. Based on a review of the H. B. Robinson systems' designs, the electric power, instrument air, and cooling water systems (component cooling water and service water) were identified as the support systems that

---

*Flow can actually be supplied up to higher pressures. However, the lifting of PORVs or safety valves should limit the pressure to 2500 psi.

†This water has a nominal temperature of 547°F.

‡It should be noted that even with the reactor coolant pumps off, the large volume of primary water will compensate for the effects of 120°F charging flow water for a long period of time.

could have an impact on the potential for overcooling transients.* The systems that could be impacted by support system failures, which were the systems identified in the previous sections as potentially affecting overcooling transients, are identified in Table 2.7.

The following subsections provide a description of the support systems reviewed, a discussion of the support system interfaces with respect to operation of the systems with PTS significance, and a summary of the impact of support system failures on the operation of systems and components potentially affecting overcooling transients. For further details, the report of this analysis is included in its entirety in Appendix A.

2.9.1. Support System Descriptions

2.9.1.1. Electric power systems

The H. B. Robinson Unit 2 ac-dc electric power distribution is shown in a simplified schematic diagram in Figure 2.10. The unit generator is the primary source of electrical power during on-line operation of the plant. Power from the generator is supplied through the 22/4.16KV unit auxiliary transformer (UAT). Another source of electrical power is supplied from the 115KV switchyard via the 115/4.16KV startup transformer (SUT).

The 4160V buses supply the 480V buses through 4160/480V station service transformers. In particular, 4160V bus 1 supplies 480V buses 2A and 2B; 4160V bus 2 supplies 480V buses 1 and E1; 4160V bus 3 supplies 480V buses 3, E2, and DS; and 4160V bus 4 supplies 480V bus 4. Tie breakers are provided between 480V buses 1, and 2A, 2B and 3, and E1 and E2. Buses E1 and E2 can also be supplied from emergency diesel generators A and B, respectively. The dedicated shutdown (DS) diesel generator can supply power to the 480V DS bus.

The 480V buses supply the 12 motor control centers (MCCs). Figure 2.10 details which 480V buses supply the individual MCCs. In addition, MCC-5 has an alternate feed from 480V bus DS.

Plant dc loads are supplied by 125V dc buses A and B. Each dc bus is fed by its associated battery charger. The two 125V dc battery chargers, A and B, are fed by 480V ac MCC-5 and MCC-6 respectively.

The 120V instrument power supply is split into 8 buses. Buses 1, 2, 3, and 4 each have a normal and an alternate power supply. Instrument buses 2 and 3 are normally fed from 125V dc bus A and bus B, respectively, via inverters. Instrument buses 1 and 4 are normally fed from 480V MCC-5 and MCC-6 respectively. The alternate power supply for instrument buses 1, 2, 3, and 4 is 120/208V MCC-8. Instrument buses 6, 7, 8, and 9 are fed from instrument buses 1, 2, 3, and 4, respectively.

*In addition to these support systems, the necessity of the plant's heating, ventilating, and air conditioning (HVAC) systems for continued plant operation was recognized. However, the effect of HVAC failures on equipment performance was expected to be long term with respect to the effects of failures of the other identified support systems. In general, the effects of HVAC failures and severe equipment operating environments were considered to be beyond the scope of this analysis.

Table 2.7. Summary of key systems/components potentially impacted by support system failures

Key System	Potentially Impacted by Support System Failures
(1) Reactor coolant system	
(a) Pressurizer power-operated relief valves (PZR PORVs)	Yes
(b) Pressurizer safety valves (PZR SVs)	No
(c) Reactor coolant pumps (RCPs)	Yes
(d) Piping (with respect to failure)	No
(e) Steam generator tube (with respect to rupture)	No
(2) Main steam system	
(a) Turbine trip systems	Yes
(b) Steam-side power-operated relief valves (STM PORVs)	Yes
(c) Steam dump valves (SDVs)	Yes
(d) Main steam isolation valves (MSIVs)	Yes
(e) Main steam bypass valves (MSBVs)	Yes
(f) Main safety relief valves (SRVs)	No
(g) Piping failure	No
(3) Main feedwater (MFW) system	
(a) MFW pumps	Yes
(b) MFW control valves	Yes
(c) MFW isolation valves (MFIV)	Yes
(d) MFW bypass valves	Yes
(4) Chemical volume and control system (CVCS)	
(a) Charging pumps	Yes
(b) Letdown isolation valves	Yes
(5) Safety injection system	
(a) Safeguards actuation system	Yes
(b) High pressure injection (HPI)	Yes
(b) Low pressure injection (LPI)	Yes
(6) Auxiliary feedwater (AFW) system	
(a) AFW electric-motor-driven pumps	Yes
(b) AFW steam-driven pumps	Yes
(c) AFW isolation valves	Yes
(7) Reactor protection system	
(Reactor trip)	Yes

Instrument buses 1, 2, 3, and 4 supply power to various analog instrument racks, which supply process instrumentation with control power. This instrumentation includes pressurizer pressure transmitters, turbine overspeed channels (TROTS), steam dump instrumentation, pressurizer level control, charging line flow control, RHR flow control, feedwater flow control, and bistables for safety injection and AFW initiation.

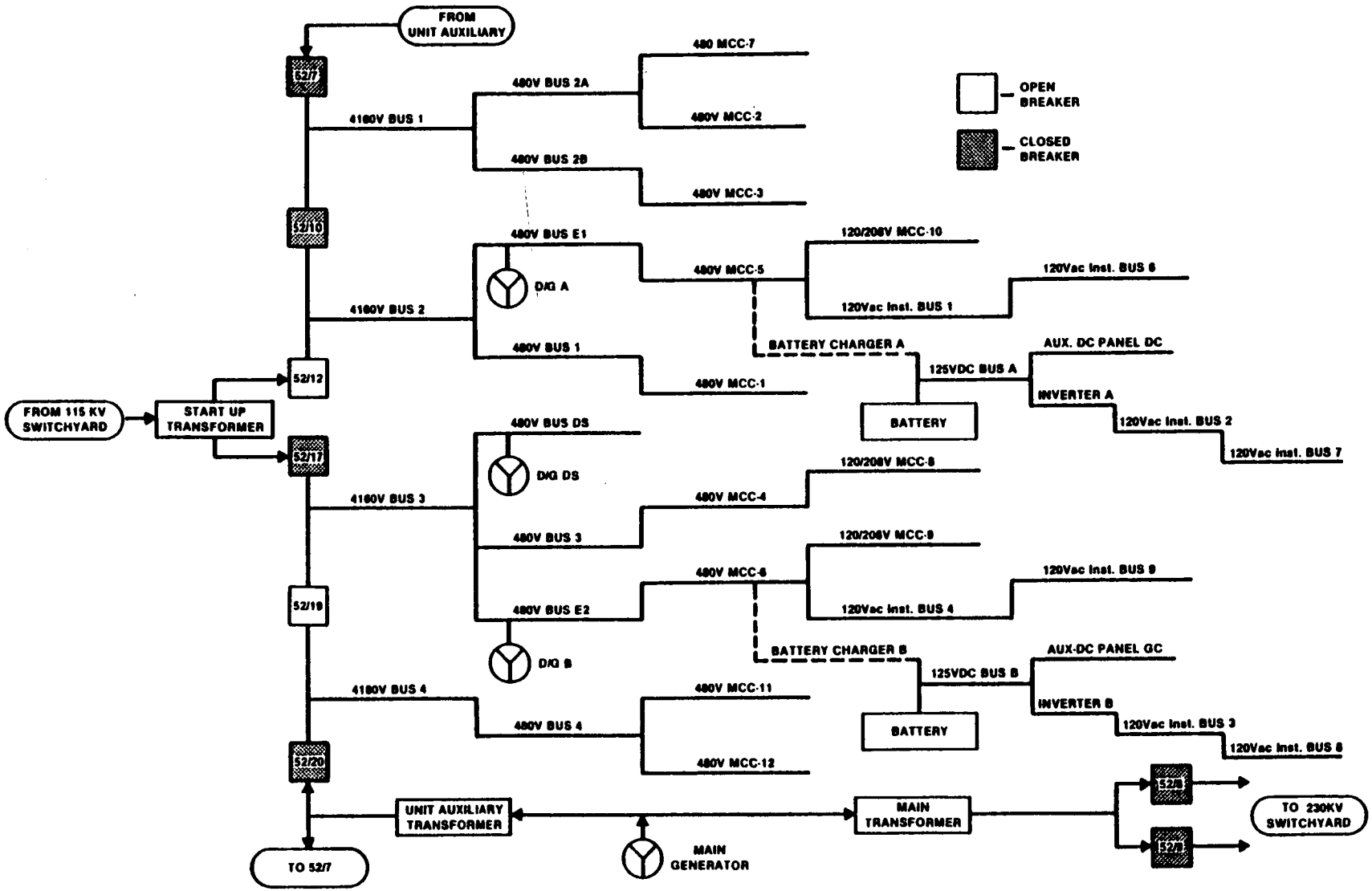

Figure 2.10. Simplified schematic of H. B. Robinson Unit 2 ac/dc power distribution.

2.9.1.2. Instrument air system

The H. B. Robinson Unit 2 instrument air system consists of multiple trains of air compressors, aftercoolers, dryers and air receivers which provide air to the instrument air headers. Instrument air headers are located in the Turbine Building, Reactor Containment Building, Reactor Auxiliary Building, Corridor and Fuel Handling Area.

Nominal instrument air header conditions are 100 to 110 psig and 85°F. Air flow demands may fluctuate with demands between 200 and 400 standard cubic feet/minute (scfm). A 516-scfm primary air compressor normally supplies the instrument and station air requirements throughout the plant. The compressor controller is placed in the "On" position for constant speed regulation (i.e., cycling the compressor cylinder load) to maintain pressure in its 427 cubic foot air receiver.

Two 200-scfm instrument air compressors, A and B, normally provide intermittent air flow to meet peak air flow demands. These instrument air trains are in parallel and are normally auto-aligned to provide an on-line backup to the primary air train. Aligned in the Auto-mode, the compressors automatically start and stop to maintain pressure in a single shared 150 cubic foot air receiver.

In addition, a 400-scfm station air compressor is used as a manual backup air supply when the primary air and instrument air systems are unavailable. The station air is not of instrument air quality* but can be valved into the instrument air system if necessary.

Power to the primary air compressor is supplied from 480V bus 2A; instrument air compressors A and B are supplied from 480V MCC-5 and MCC-6, respectively; station air compressor power is supplied from 480V bus 2B. The compressors are cooled by service water.

Instrument air is required by the following components: PZR PORVs, MSIVs, STM PORVs, feedwater control and bypass valves, charging pump and AFW pump lube oil cooling valves, letdown isolation and charging flow control valves, charging pump and AFW turbine pump speed control and RHR system valves.

2.9.1.3. Component cooling water system

The component cooling water (CCW) system is a closed-loop system. The CCW system removes heat from various components and is cooled via two CCW heat exchangers, which are, in turn, cooled by service water. There are three CCW pumps. Normally one pump and one heat exchanger can handle the heat removal loads during full-power operation. During normal operation the CCW system provides cooling water to the reactor coolant and charging pumps. Two CCW pumps and heat exchangers are utilized for removing residual heat and pump heat during normal plant shutdown.

Power to CCW pumps A, B, and C is supplied from 480V buses DS, E1, and E2, respectively. CCW pumps A and B are actuated by SI trains A and B, respectively. The pump

*The station air is normally running on its own header where air quality is not important.

motor breakers have undervoltage trips which will operate upon loss of power. A station blackout will actuate CCW pumps B and C per safeguards sequence for blackouts. A SI actuation with no station blackout does not alter the pumps B and C configuration in effect. However, a SI actuation with a station blackout will trip out CCW pumps B and C and require their manual restart. The pumps cannot be manually restarted if a containment spray signal is in effect. Since CCW pump A is powered by DS bus, it is not affected by safeguards action.

2.9.1.4. Service water system

The service water system (SWS) is an open-loop system taking its suction from Lake Robinson. The service water system supplies cooling water to several items of plant equipment. This system also serves as a backup supply to the auxiliary feedwater pumps. There are four 1/3 capacity service water pumps. Three pumps normally operate. The pumps discharge into two common 30-inch headers. The service water system provides heat removal from the following components: main feedwater pumps; motor- and steam-driven auxiliary feedwater pumps; CCW heat exchangers; primary, station, and instrument air compressors; emergency diesel generators; and the safety injection pumps.

The service water pumps are supplied motive power from the following 480V buses: pumps A and B from 480V bus E1, and pumps C and D from 480V bus E2.

2.9.2. Support System Interfaces to Systems with PTS Significance

Support system interfaces to several components with PTS significance were described in the previous sections. A summary of instrument air, CCW and service water is provided in this section in Table 2.8. Electric power interfaces are extensive and impact essentially all components. Appendix A identifies the electric power supplies, both motive and control, for all components and controllers considered in this support system interaction study. Additional discussion on the more complex interfaces is provided below.

2.9.2.1. Charging pump control

When in the auto-control mode, the charging pumps operate on a control signal from the pressurizer level controller LC-459F. On low level (high voltage), the operating pump speed is increased, and the letdown flow path is isolated. On loss of voltage from the pressurizer level controller to the pump speed controller, the pump speed goes to minimum. In the auto-control mode, charging pump speed goes to maximum on loss of instrument air to the charging pump speed controller.

2.9.2.2. Main feedwater system

Feedwater flow to each of the three steam generators is controlled by a separate feedwater control loop which modulates the main feedwater control valves. On zero voltage output from one of the feedwater flow controllers, the feedwater control valve in that loop closes. Feedwater controllers in loops 1, 2, and 3 are powered by instrument buses 1, 2, and 3, respectively. The feedwater control and bypass valves also fail closed on loss of instrument air supply.

Table 2.8. Summary of support system interfaces with respect to components of interest for PTS analysis: instrument air, component cooling water (CCW), and service water (SW)

Systems	Components Requiring Instrument Air	Components Requiring CCW	Components Requiring SW
	Front Line Systems		
1. Reactor coolant system	PORVs RC-456 RC-455C	RCP (bearings and thermal barrier cooling coil)	
2. Turbine protection system			
3. Main steam system	MSIVs Steam dump valves Steam-side PORVs		
4. Main feedwater system	Feedwater control valves Feedwater bypass valves		Feedwater pumps A & B seal water
5. Chemical volume control system	Isolation valves to RCS: CVC-310A & B CVC-311 Charging line FCV Letdown isolation valves Pump suction valve from RWST Charging pump speed control	Charging pumps (lube oil cooling)	
6. Safety injection system	N_2 supply valve to accumulators: SI-855 Accumulator drain and vent valves	SI pumps (seal water heat exchanger	SI pump thrust bearing cooling
7. Auxiliary feedwater system	Turbine-driven pump speed control		Motor-driven and turbine-driven AFW pumps (bearings)
8. Residual heat removal system	Pump suction valves from RWST: SI-862A & B Discharge valves: FCV-605 HCV-758	RHR (pump seal water heat exchanger)	
	Support Systems		
10. Component cooling water systems	Charging pump discharge valves: TCV-659A, B, & C		CCW heat exchangers A & B
11. Service water system	Suction control valves to AFW pumps A, B, & turbine: TCV-1902A TCV-1903A TCV-1903B Discharge control valves from air compressors A & B: TCV-1629A & B		
12. Instrument air system			Primary air compressors Instrument air compressors A & B
13. Electric power system			Diesel generator cooling

2.9.2.3. Main steam system

Each MSIV has two three-way solenoids, in series, which when energized supply instrument air pressure to the MSIV bottom chamber. These two solenoids are supplied by 125V dc power from auxiliary dc panels DC and GC, respectively. Loss of power supply to either solenoid or loss of instrument air to the bottom chamber will cause the valve to close with spring assist.

2.9.2.4. Steam dump system

Three STM PORVs and five condenser SDVs are provided to relieve steam from the main steam lines to the atmosphere and condenser when required. These valves are pneumatically operated and designed to fail closed upon loss of pneumatic pressure.

The STM PORVs and SDVs open by energizing solenoid valves to open (powered by 125V dc auxiliary panels DC and GC), which results in pressurization of the STM PORVs with air and the condenser SDVs with nitrogen. Additionally, the SDVs require the nitrogen supply to be open or armed, which requires that an arming signal exist. The STM PORVs will arm in the T_{avg} mode during load rejection if required.

The SDVs normally operate under the T_{avg} steam dump control system, but they can be operated under the steam dump pressure control system for plant cooldown. This analysis assumes the T_{avg} control configuration. Control of the STM PORVs, which is normally from independent pressure controllers, switches to the T_{avg} steam dump control when a sudden loss of load occurs. Loss of power to PM-447, the loss-of-load signal generator, precludes control of the STM PORVs by the T_{avg} control system. The loss-of-load signal from PM-447 also provides the arming signal to the SDVs. When T_{avg} falls below a certain set point, the arming signal is removed. The signals required for automatic opening of the SDVs and PORVs under T_{avg} control (high T_{avg} and sudden loss-of-load signals) require 120V ac power from instrument buses 1 and 4.

2.9.2.5. Safety injection system

Safety injection will be initiated by 2 out of 3 high steam-line differential pressure signals in one loop, 2 out of 3 low pressurizer pressure signals, 2 out of 3 high containment pressure signals, and high steam flow in 2 out of 3 steam lines coincident with either low T_{avg} or low steam pressure in the same steam lines. The three pressurizer pressure bistables are supplied power from instrument buses 1, 2, and 3, respectively, via associated analog instrument racks. Loss of power to any two of the three bistables initiates safety injection. Other system variables that initiate SI require a high signal.

2.9.2.6. Auxiliary feedwater system

The steam-driven auxiliary feedwater pump and associated discharge valves can supply auxiliary feedwater to the steam generators. This pump utilizes a speed controller to bring

the pump up to a regulated speed. When instrument air to the speed controller is lost, the pump goes to full speed.

2.9.2.7. Residual heat removal system

The RHR flow is controlled by two pnematically operated control valves, HCV-758 and FCV-605, which are closed during normal operation. When instrument air is lost to these valves, they fail closed, resulting in RHR flow isolation. Low-pressure injection is supplied from the RHR system via bypass valve RHR 764, which is capable of providing LPI flow at any time. This valve is not affected by loss of instrument air.

2.9.2.8. Reactor protection system

The reactor protection system consists essentially of control/logic cabinets which cause the control rods to drop on the detection of a variety of unfavorable plant states. The reactor trip will occur on loss of power to either of the two motor generator sets powered from the 480V buses 2B and 3, loss of 125V dc control voltage from Panels A or B to reactor protection trains A or B, respectively, or by loss of 125V dc from Panels A or B to the trip circuit breakers. Reactor trip will also occur upon under-voltage detection on 2 out of 3 of the 4KV buses 1, 2 or 4. Failure of any one of the 120V ac instrument buses, which transmit the reactor trip process signals, will not directly cause a reactor trip due to the 2 out of 3 logic arrangement that prevails in the reactor protection system.

2.9.2.9. Turbine protection system

Turbine protection by turbine trip is accomplished by releasing pressure in the hydraulic fluid system, which, in turn, causes the governor, reheat, intercept, and stop valves to close. Hydraulic pressure release is accomplished by three solenoid-operated valves (20-ET, 20-1, and 20-2) or by a mechanically activated valve maintained closed by the auto-stop lube oil pressure. A fourth solenoid-operated valve, 20-AST, is provided for pressure release of the auto-stop lube oil system in addition to several mechanically operated valves.

All four solenoid-operated valves require electrical power to open for pressure release. An auto-stop turbine trip will not occur if the 125V dc Panel A is de-energized due to the lack of power availability to the solenoid of 20-AST. This is also true for turbine emergency trip (20-ET) except that the power is supplied from 125V dc Panel B. Loss of power from dc Panel B will also fail solenoids 20-1 and 20-2, preventing a governor/intercept trip.

Additional and diverse turbine protection is provided by the turbine redundant overspeed trip system (TROTS) which operates under a 2 out of 3 logic scheme. Loss of power to 2 of the 3 TROTS control channels powered from 120V ac instrument buses 6, 7 and 8 will initiate a turbine trip. Actuation of additional solenoids is required to implement the trip initiated by TROTS.

2.9.2.10. Switchgear

The 4160V and 480V switchgear control power is supplied by 125V dc buses A and B. This switchgear consists of breakers feeding the buses and major loads off of the buses. The switchgear supplied by 125V dc bus A are on 4160V buses 1 and 2; and 480V buses 1, 2A, and E1. The switchgear supplied by 125V dc bus B are on 4160V buses 3 and 4; and 480V buses 2B, 3, and E2. Loss of the 125V dc control power precludes switchgear operation.

2.9.3. Impact of Support System Failures

The impact of support system failures on the components with PTS significance is summarized in this section. Many of the system failure modes identified are low probability events. In addition, failure of the operator to take available remedial actions or manual control is required, in many cases, to result in a transient adverse to PTS. The combined impact and frequency of support system failures will be evaluated in Chapter 3 and compared to other PTS sequence frequencies to complete the evaluation of potential support system impacts on PTS sequences.

The initial conditions assumed for the support system failure modes analysis is that the plant is in a normal automatic control mode and the on-site electrical system is configured as shown in Figure 2.10. Immediate effects due to support system failures have been noted. In addition, certain failures leading to long-term effects, such as the potential loss of RCP seals due to the consequent unavailability of seal water, have been noted.

2.9.3.1. Electrical bus failures

Electric bus failures can occur for a variety of reasons, including isolation or failure of feeder buses, equipment faults not cleared by local breakers, or faults that could occur during maintenance. For purposes of this analysis, single unspecified failures were postulated at various points in the power distribution circuitry. A bus failure was assumed to de-energize the directly affected bus and buses fed from the failed bus. The batteries supplying dc buses A and B were considered to be fully charged and the diesel generators were assumed to be unavailable.

The impact of single bus failures was assessed first. The buses considered included the 4KV buses, the 480V buses, the 480V and 120/208V MCCs, the 125V dc buses, and dc auxiliary Panels DC and GC. In addition, certain double bus failures were postulated. Those considered were two failed 4KV buses at a time and failure of both dc buses A and B. Lastly, the existence of maintenance ties between MCC-8 on 4KV bus 3 and the various instrument buses was considered, with faults on the 4KV bus 3 postulated and evaluated. The 125V dc buses have multiple power supplies and no maintenance ties.

The responses of the systems and components to the postulated electric power failures are summarized in Table 2.9. The responses noted are for those components and systems potentially important to PTS sequences.

Table 2.9. Impact of electric power failures on systems and components important to PTS sequences

Postulated Failures	System/Component Response	Response of Potential Concern to PTS Sequences
	Single Bus Failures	
1. Loss of 4KV Bus 1	• FW Pump A off • RCP A off (reactor trip due to resulting transient)	No
2. Loss of 4KV Bus 2	• FW Loop 1 isolation • STM dump valves fail closed • RCP C off (reactor trip due to resulting transient) • Loss of all but one SI pump	No
3. Loss of 4KV Bus 3 (and associated 480V diesel generator)	• PORV RC-455C stays closed • PORV block valves fail open • STM dump valves fail closed • STM PORVs fail closed if load reject signal PM-447 exists • Turbine trip (and reactor trip by logic) • Letdown isolation • Minimum auto charging pump flow (manual recovery may be required) • Loss of all SI pumps except A • Loss of two of three charging pumps	No
4. Loss of 4KV Bus 4	• FW Pump B off • RCP B off (reactor trip due to resulting transient)	No
5. Loss of 125V dc Panel A (which through logic, also results in loss of 4KV Buses 1 and 2)	• All PZR heaters off • PZR aux-spray valve fails closed • Reactor trip • Turbine trip (from 2/3 TROTS channels) • SI Train B actuated (from 2/3 PZR low pressure) • RCP A and C off • MSIVs close (given spring assist operates) • AFW actuates • PORV RC-456 stays closed • All STM dump valves and STM PORVs fail close • FW isolation • Letdown isolation	Yes

Table 2.9 (Continued)

Postulated Failures	System/Component Response	Response of Potential Concern to PTS Sequences
	Single Bus Failures (Cont'd)	
	• Instrument air capacity marginal (compressor B only) • Charging line to Loop 2 cold leg fails open, but no change in charging flow	
6. Loss off 125V dc Panel	• Reactor trip (and TT by logic) • SI Train B actuated (from 2/3 PZR low pressure) • 2 STM dump valves fail closed (A-2 and B-3) • FW isolation • Letdown isolation • Both pressurizer PORVs fail closed • PZR control heaters on • AFW actuates with only MAFW pump A available • MSIVs close (given spring assist operates)	Yes
7. Loss of 125V dc Aux. Panel DC	• PZR aux-spray valve fails closed • PORV RC-456 fails closed • STM PORVs fail closed • 3 STM dump valves fail closed (A-1, B-1, B-2) • MSIVs close (given spring assist operates) • FW isolation (control and bypass valves closed) • Letdown isolated • Charging line to Loop 2 cold leg fail open, but no change in charging flow	Yes
8. Loss of 125V dc Aux. Panel GC	• PORV RC-455C fails closed • 2 STM dump valves closed (A-2, B-3) • MSIVs close (given spring assist operates) • FW isolation • Letdown isolated • Charging line to Loop 1 cold leg fail open, but no change in charging flow	No

Table 2.9 (Continued)

Postulated Failures	System/Component Response	Response of Potential Concern to PTS Sequences
	Single Bus Failures (Cont'd)	
9. Loss of 480V Bus 1	• None	No
10. Loss of 480V Bus 2A	• Primary air compressor fail • Delayed turbine trip (due to eventual EH system depressurization)	No
11. Loss of 480V Bus 2B	• None	No
12. Loss of 480V Bus 3	• Delayed turbine trip (eventual EH system depressurization) • Turbine trip (RT by logic)	No
13. Loss of 480V Bus E1	• STM dump valves fail closed • Loop 1 FW isolated	No
14. Loss of 480V Bus E2	• PORV RC-455C fails closed • STM dump valves fail closed • STM PORVs fail closed if load reject signal PM-447 exists • Minimum auto charging pump flow (manual recovery may be required) • Letdown isolated • 2/3 SI pumps off (B and C)	No
15. Loss of 480V Bus DS	• One charging pump and one CCW pump failed	No
16. Loss of 480V MCC-2	• Delayed TT (due to eventual EH system depressurization)	No
17. Loss of 480V MCC-3	• None	No
18. Loss of 480V MCC-4	• Turbine trip (RT by logic) • Delayed TT (due to eventual EH system depressurization) • MSIV bypass valves fail closed	No
19. Loss of 480V MCC-5	• Loop 1 FW isolated • STM dump valves fail closed	No
20. Loss of 480V MCC-6	• PORV RC-455C fails closed • STM dump valves fail closed • STM PORVs fail closed if load reject signal PM-447 exists • Minimum auto charging flow (manual recovery may be required)	No

Table 2.9 (Continued)

Postulated Failures	System/Component Response	Response of Potential Concern to PTS Sequences
	Single Bus Failures (Cont'd)	
21. Loss of 480V MCC-8	• Turbine trip (RT by logic) • Delayed TT (due to eventual EH system depressurization) • MSIV bypass valves fail closed	No
22. Loss of 480V MCC-9	• None	No
23. Loss of 480V MCC-10	• None	No
	Multiple Bus Failures	
1. Loss of 4KV Buses 2 and 3 (and associated 480V diesel generators)	• Turbine trip (RT by logic) • PORV RC-455C fails closed • PORV block valves failed open • RCP C off • STM dump valves fail closed • FW Loop 1 isolation • Charging pumps off • Letdown isolated (loss of PZR level control) • HPI not operable • AFW not operable • RHR not operable • Component cooling pumps lost* • Service water pumps off* (resulting in loss of instrument air) MSIV closure (given spring assist operates) Primary and secondary PORV closure FW isolation	Yes
2. Loss of 4KV Buses 1 and 2 (and associated 480V diesel generator)	• RCPs A and C off (reactor trip due to resulting transient) • PZR heaters off • Delayed TT and immediate TT by logic • Reactor trip • STM dump valves fail closed • Only instrument air compressor B is left • FW Loop 1 isolated • Charging flow can't be throttled by valve (level control on pump speed is operable)	Yes

Table 2.9 (Continued)

Postulated Failures	System/Component Response	Response of Potential Concern to PTS Sequences
	Multiple Bus Failures (Cont'd)	
3. Loss of 4KV Buses 1 and 4	• Reactor trip • Turbine trip (by logic) • RCPs A and B off • FW isolation • AFW actuated by logic (turbine pump only)	No
4. Loss of 4KV Buses 1 and 3 (and associated 480V diesel generators)	• PORV RC-455C stays closed • PORV block valves failed open • Delayed TT (eventual EH system depressurization) • RCP A is off • Reactor trip • Instrument air compressor A left only • Minimum auto charging pump flow (manual recovery may be required) • Letdown isolation • STM dump valves fail closed • STM PORVs fail closed if load reject signal PM-447 exists • SI available with Pump A only	No
5. Loss of 4KV Buses 2 and 4 (and associated 480V diesel generator)	• Reactor trip • Turbine trip (by logic) • RCPs B and C off • STM dump valves fail closed • FW isolated to Loop 1 via control valve closure	No
6. Loss of 4KV Buses 3 and 4 (and associated 480V diesel generators)	• PORV RC-455C stays closed • PORV block valves failed open • Delayed TT (eventual EH system depressurization) • Immediate turbine trip from governor control cabinet (RT by logic) • RCP B is off • Minimum auto charging pump flow (manual recovery may be required) • Letdown isolation • STM dump valves fail closed • STM PORVs fail closed if load reject signal PM-447 exists • SI available with pump A only	No

Table 2.9 (Continued)

Postulated Failures	System/Component Response	Response of Potential Concern to PTS Sequences
	Multiple Bus Failures (Cont'd)	
7. dc Panels A and B	• Reactor trip • PZR aux-spray valve fails closed • Both primary PORVs closed • TT failure (if TROTS also fails on loss of dc power) • STM dump valves and STM PORVs fail closed • MSIVs closed (given spring assist operates) • FW isolated • Letdown isolated • Charging flow continues to cold legs 1 and 2 from Pump A only; operator can shut off pump A • All RCPs on and cannot be tripped • All PZR heaters on and cannot be tripped • SI not operable • AFW not operable • RHR not operable	Yes
	Bus Failures with Maintenance Ties	
1. Loss of 4KV Bus 3** with Instrument Bus 2 tied to 120/208V MCC-8 (Instrument Bus 1 also incurs a temporary voltage reduction due to the 4KV transfer that is initiated by TT)	• Turbine trip (RT by logic) • PORV RC-455C stays closed • PORV block valves fail open • STM dump valves fail closed • STM PORVs fail closed if load reject signal PM-477 exists • FW Loop 2 isolates • Minimum auto charging flow (manual recovery may be required) • SI actuated (one SI pump available) • AFW actuated • Letdown isolated	Yes

Table 2.9 (Continued)

Postulated Failures	System/Component Response	Response of Potential Concern to PTS Sequences
	Bus Failures with Maintenance Ties (Cont'd)	
2. Loss of 4KV Bus 3** with Instrument Bus 3 tied to 120/208V, MCC-8 (Instrument Bus 1 also incurs a temporary voltage reduction due to the 4KV transfer that is initiated by TT)	• Turbine trip (RT by logic) • PORVs RC-455C and RC-456 stay closed • STM dump valves fail closed • STM PORVs fail closed if load reject signal PM-447 exists • FW loop 3 isolates • Minimum auto charging flow (manual recovery may be required) • SI actuated (one SI pump available) • AFW actuated • Letdown isolated	Yes
3. Loss of 4KV Bus 3** with Instrument Buses 2 and 3 tied to 120/208V, MCC-8 (Instrument Bus 1 also incurs a temporary voltage reduction due to the 4KV transfer that is initiated by TT)	• Turbine trip (RT by logic) • PORVs RC-456 and RC-455C stay closed • STM dump valves fail closed • STM PORVs fail closed if load reject signal PM-447 exists • FW loops 2 and 3 isolate • Minimum auto charging flow (manual recovery may be required) • SI actuated (one SI pump available) • AFW actuated • Letdown isolated	Yes

*See Table A.7 for additional effects.

**Also assumes loss of associated 480V diesel generators.

Loss of any one of the 4KV buses 1, 2 (and bus E1 Diesel) or 4 would be expected to have little or no impact from a PTS standpoint; however, a reactor trip would be expected due to loss of the RCP. Loss of 4KV bus 3 would result in the following simultaneous effects: turbine trip and subsequent reactor trip, letdown isolation, failure of one pressurizer relief valve to open, failure of all steam dump valves to open, charging flow in the auto mode going to minimum, and only one SI pump being available.* The pressurizer relief block valves would not be operable if required to close. Loss of 4KV bus 2 would result in isolation of one main feedwater loop and failure of all five steam dump valves in the closed position.

*It is anticipated that this event would lead to auto-start of Diesel Generator B. If this diesel is in operation, 3 SI pumps would be available.

Loss of power to the 125V dc distribution panels results in multiple effects. Loss of dc Panel A produces a reactor trip signal, which initiates a turbine trip and transfer of the 4KV buses; however, the transfer cannot be completed without power from dc bus A and, thus, power is lost on 4KV buses 1 and 2 as well during the transfer. This sequence does not occur on the loss dc Panel B; or on the simultaneous loss of both dc panels. For these failures the 4KV buses are backfed from the 230KV switchyard. With the loss of dc Panel A and the consequential loss of 4KV buses 1 and 2, a reactor trip, a turbine trip, AFW, and SI are initiated; one pressurizer relief valve, the MSIVs, three of five SDVs, and the STM PORVs are failed in the closed position; the pressurizer heaters are off; and feedwater and letdown lines are isolated. With loss of power on dc Panel B the pressurizer heaters are failed on with both pressurizer relief valves failed closed; a reactor trip and a turbine trip are initiated; feedwater and letdown lines are isolated; and two steam dump valves are failed in the closed position.

With loss of power on both 125V dc buses A and B, a reactor trip is initiated. Also, AFW and low pressure safety injection (RHR) are not operable; letdown and feedwater flow are isolated; MSIVs, primary and secondary side PORVs, and all steam dump valves are failed in the closed position; charging flow can be isolated only by shutting off the operating charging pump; and all RCPs and pressurizer heaters are failed on and cannot be tripped from their normal control systems.

All combinations of double 4KV bus failures were postulated and analyzed (i.e., all double failure combinations of the four buses). The postulated failure of 4KV buses 2 and 3 (including loss of associated diesel generators on buses E1 and E2) had the greatest impact on vital systems. The other combinations involving failure of 4KV bus 3 (buses 3 and 1 and 3 and 4) had lesser impacts. These combinations resulted in a reactor trip, a turbine trip, one primary side PORV failing closed, letdown isolation, all steam dump valves failing closed, one RCP off, and only one SI pump and one instrument air compressor available. With failure of 4KV buses 2 and 3, all SI pumps and charging pumps would be inoperable, as would all motor-driven AFW,* component cooling water and service water pumps. Loss of seal flow to the RCPs due to the charging pump failure could potentially lead to RCP seal failure. And, in addition, although the lag time would be greater, loss of service water could fail all instrument air compressors, which would eventually cause feedwater isolation, MSIV closure, and primary and secondary side PORV closure.

Failure of 4KV buses 1 and 2, 1 and 4, and 2 and 4 are similar, except that the 1 and 4 combination results in actuation of AFW, and the 1 and 2 combination results in the pressurizer heaters failing off and all instrument air compressors except B failing. These failed bus combinations would all result in a reactor trip, a turbine trip, two RCPs off, and at least partial feedwater isolation.

The postulated failure of 4KV bus 3 with maintenance ties to 120V instrument buses 2 or 3 through MCC-8 maintenance tie led to evaluation of three additional failure modes. Failure of 4KV bus 3 will initiate a transfer of the 4KV buses to the SUT. The transfer of 4KV bus 1 to the SUT will induce a momentary power loss on instrument bus 1. This momentary loss, coupled with the loss of either instrument bus 2 or 3, will actuate SI on a two of three low pressurizer pressure channel logic.

*Steam-driven AFW would be available even if all power is lost. However, subsequent loss of instrument air due to loss of CCW could result in loss of control of steam-driven AFW.

In addition to the conditions that failure of 4KV bus 3 would initiate, loss of instrument bus 2 or instrument bus 3 in combination with the momentary loss of instrument bus 1 will result in SI and AFW actuation, main feedwater isolation (due to SI), and PORV RC-456 unavailability (instrument bus 3 only).

2.9.3.2. Instrument air system failures

Instrument air system failure (low pneumatic supply pressure) can be caused by a postulated passive failure of the instrument air headers or loss of motive or control power to the instrument air compressors. Normal plant instrument air requirements can be satisfied either by the primary compressor or either instrument air compressor (A or B). Thus, failure of one or two of the compressors will not result in system failure. No single or double bus failures will directly result in loss of all three compressors. Loss of service water to the compressors would lead, ultimately, to failure of the three compressors and the station air compressor. A double bus failure of 4KV buses 2 and 3 will fail service water. The time required for the compressors to fail following a loss of service water is unknown; however, the operator may choose to trip the compressors rather than allowing them to run to failure. Following loss of the compressors, the instrument air system is expected to depressurize over a period of minutes, perhaps longer, depending on the air requirements during the particular transient.

The effects of instrument air failure on the systems and components important to PTS are provided in Table 2.10. The primary and secondary side PORVs would fail closed, as would the MSIVs, feedwater control and bypass valves (if open), letdown isolation valves, and RHR supply valves to the RCS. (LPSI, however, is available through its normal flow line and bypass valve RHR 764.) This would isolate feedwater and letdown flow and fail low-pressure injection. The steam dump valves, which require N_2 for operation, are not impacted by loss of instrument air. Loss of air to the speed controllers on the AFW turbine pump and the charging pumps would result in operation at full speed. In addition, charging flow supply and control valves would fail open. Thus, the charging pump would have to be manually controlled to control charging flow.

2.9.3.3. Cooling water system failures

Failure of the component cooling water systems and service water system can be caused by loss of power to the respective supply pumps or by mechanical pump failures. Supply valves in the systems are normally open. The air-operated valves normally fail open and the motor-operated valves generally fail as is.

All three CCW pumps must be inoperable in order to fail CCW. Loss of motive power on the 480V buses DS, E1, and E2 or loss of motive power on the 480V bus DS and control power on dc Panels A and B would fail the CCW pumps. If diesel generators were unavailable, faults on 4KV buses 2 and 3 would also fail CCW.

Normally two of the four service water pumps are required for the service water system to be operable during transient conditions. Loss of motive power on both 480V E1 and E2

Table 2.10. Impact of loss of instrument air, component cooling water, and service water on systems and components with PTS significance

Postulated Failures	System/Component Response	Response of Potential Concern to PTS Sequences
Loss of Instrument Air	• PZR PORVs fail closed • STM PORVs fail closed • MSIVs fail closed (given spring assist operates) • FW isolation (control and bypass valves closed) • Auto throttling of charging flow is failed (control valves failed open and charging pump speed control is lost) • Letdown isolated and charging pump speed control is lost, failing pump full speed • Loss of RHR (RHR supply valves to RCS; this does not result in loss of LPSI) • AFW turbine pump full speed, if pump is operating (due to failure of speed controller)	Yes
Loss of CCW	• Potential RCP seal failure (loss of seal water due to loss of charging pump and loss of RCP thermal barrier cooling) • Potential SI pump seal failure • Potential RHR pump seal failure	Yes
Loss of SWS	• Potential loss of FW pumps (FW isolation) • Potential loss of AFW (pumps) • Potential SI (pump) failure • Loss of IA (primary and instrument air compressors) MSIVs close (given spring assist operates) PORVs fail closed STM PORVs closed Letdown isolated Auto throttling of charging flow failed Loss of RHR • Slow loss of CCW (loss of heat sink from HXs) • Potential RCP bearing failure • Loss of containment fan coolers	Yes

buses would fail the four service water pumps. Depending on which pumps were operating, loss of control power from either the dc Panel A or B could prevent standby pumps from being started, if required. In addition, loss of service water to the CCW heat exchangers would result in a slow degradation of the CCW system due to loss of heat removal.

The effects of cooling water system failures on the systems and components important to PTS are provided in Table 2.10 with the effects of instrument air failures. Loss of CCW could lead to eventual RCP seal degradation or failure in the charging pumps, the SI pumps, and the RHR pumps. Loss of the charging pumps would fail seal water to the RCPs, which could lead to RCP seal failure and a small-break LOCA. CCW also cools the RCP bearings and thermal barrier cooling coil.

Loss of service water would result in loss of all three instrument air compressors and subsequent failure of the instrument air system. AFW pumps, feedwater pumps, and SI pumps would also be failed on loss of service water. The system level effects of a service water system failure including the subsequent loss of instrument air would include: feedwater and letdown isolation; inoperability of AFW, SI, RHR, and charging flow auto control; and closure of MSIVs, primary and secondary side PORVs, and possibly the steam dump valves.

2.9.4. Summary

Plant responses from 12 of the 36 support system failures postulated were considered to be of potential concern to PTS sequences. Nine of the postulated failures were the electric bus failures and the remaining three were the loss of component cooling water, instrument air, and service water systems.

The plant functions adversely affected by support system failures from a PTS standpoint are the charging flow, safety injection, AFW flow, pressurizer control, RCP operation, and, potentially, turbine operation. The steam dump valves, primary and secondary side PORVs, and MSIVs fail closed on support system failures; letdown and main feedwater flow are isolated on support system failures; and safety injection accumulator operability is not impacted by support system failures.

Instrument air failure results in overfeed from the charging pumps, unless the pumps are switched to manual mode and operated in a start-and-stop-mode to gain flow control. Loss of service water will fail the instrument air compressors, and thus lead to eventual charging flow overfeed. A double bus failure on 4KV buses 2 and 3 (and their diesels) will fail all charging pumps and could lead to potential RCP seal failures.

The three bus failures that involved instrument buses tied to 4KV bus 3 (which powers the 480V E2 bus) for maintenance resulted in actuation of SI and AFW. Loss of power to dc Panel A also results in actuation of SI and AFW.

Certain electrical bus failures involving 4KV bus 3 fail the pressurizer PORV block valves open while at least one of the PORVs is operable. Loss of dc power will fail circuit breakers on the pressurizer heaters and the RCP pumps so that these components cannot be

tripped off from normal control station. Loss of power to both dc Panels A and B causes turbine trip failure of 3/4 of the turbine trip systems. If loss of dc power also fails the solenoid trip valves associated with the turbine redundant overspeed trip system (TROTS), the turbine can only be tripped manually or by mechanical overspeed actuation of the auto-stop trip system.

The frequency of the 16 support system failures considered of potential concern to PTS sequences and the associated PTS sequence frequencies are addressed in Chapter 3.

2.10. Reference

1. The information in the HBR-2 systems included in this chapter was obtained from the Final Safety Analysis Report for H. B. Robinson Unit 2.

Chapter 3

DEVELOPMENT OF POTENTIAL OVERCOOLING SEQUENCES FOR H. B. ROBINSON UNIT 2

C. L. Mason, A. F. McBride,
R. Olson, and P. N. Austin

Science Applications International Corporation

D. L. Selby

Oak Ridge National Laboratory

3. DEVELOPMENT OF POTENTIAL OVERCOOLING SEQUENCES FOR H. B. ROBINSON UNIT 2

3.1. Introduction

The development of overcooling sequences that potentially could result in pressurized thermal shock (PTS) to a reactor vessel is difficult due to the complex interactions of the many systems comprising a nuclear power plant. The first step in the development of these sequences for H. B. Robinson Unit 2 was the analysis of plant systems to determine possible system operating states, including failed states, which could affect an overcooling transient. The system state trees resulting from this analysis are presented in Section 3.2. The second step was the identification of specific initiating events which could lead to overcooling transients, followed by a review of the events to evaluate whether they need be considered with respect to PTS. A summary of the initiators determined to be applicable to the H. B. Robinson Unit 2 PTS analysis is presented in Section 3.3.

The third step in the development of the overcooling sequences was an examination of the system operating states with respect to the initiating events and the development of initiator-specific transient sequences in an event-tree format. In each case the event tree includes pertinent operator actions associated with each initiator that were determined from a review of plant operating procedures. The resulting event trees are presented in Section 3.4.

Finally, as described in Section 3.5, the expected frequency of each event-tree transient was calculated based on data from H. B. Robinson Unit 2 and generic failure data. The calculated frequencies and engineering judgement were then used to group the event-tree sequences to develop a final list of sequences to be considered in subsequent thermal-hydraulics and fracture-mechanics analyses.

3.2. System State Trees

Each of the systems discussed in Chapter 2 was examined to identify those system and subsystem functions which could have a significant effect on the temperature or pressure in the reactor vessel downcomer region, and system state trees were then developed for the pertinent systems. The headings and the possible branches associated with these trees are described in this section, but for brevity the system state trees themselves are not included.

System state trees represent possible system operating states in response to an unspecified initiating transient. Since the systems were analyzed on a functional basis, the branching on the state trees may be more complex than simple binary success and failure branches. This will be noted by qualifying conditions specified for some of the branches.

Thermal-hydraulic "conditioning events" are also included on the functional system state trees. These events serve a dual purpose: (1) they limit the number of potential end states for a given system state tree that must be considered, and (2) they permit the coupling between the various functional system state trees (due to the thermal-hydraulic

interactions). The term "conditioning events" is used since subsequent system responses are considered conditional on the thermal-hydraulic parameters which typically comprise the event description.

3.2.1. Reactor Vessel and Its Internals

The components of the first system examined consist of the pressure vessel and its internals, or, more specifically, the reactor core and its support structure. Since a reactor trip is assumed to occur following any initiating transient considered in the PTS analysis, the only "action" expected of the reactor core is that it achieve subcriticality following the trip. The power generated by the core following the trip is a known function of time and past operation (i.e., it is not a function of an initiating event or the system failure), and thus no system state tree was developed for the pressure vessel and its internals.

3.2.2. Reactor Coolant System

As described in Chapter 2.0, the function of the reactor coolant system (RCS) is to remove heat from the reactor core and transfer it to the secondary system. This primary function is accomplished by two subfunctions: (1) maintaining reactor coolant loop flow from the core to the steam generators and (2) controlling the reactor coolant loop pressure to maintain the reactor coolant in a subcooled liquid state. Thus, there is a potential need for two system state trees to describe this system. [Another subfunction, control of reactor coolant inventory, is discussed in the subsequent sections on the safety injection system (SIS) and the chemical and volume control system (CVCS).]

A review of reactor coolant system components revealed that the reactor coolant pumps (RCPs) comprise the only set of active components required to maintain forced circulation of reactor coolant. For an overcooling event of any consequence, the RCPs are expected to be manually tripped by the operator,* an act that increases the potential for loop flow stagnation, which, in turn, could lead to reduced downcomer temperatures.† Hence, failure to trip the pumps would improve the situation from the PTS point of view; however, as the procedures are presently written, this would constitute a failure of the operator to comply with procedures. Since credit should not be taken for a failure which could reduce the severity of a transient, the assumption was made that the RCPs would always be tripped when primary system pressure dropped below 1300 psig following a safety injection actuation signal (SIAS).‡ Thus, the operation of the pumps was not considered in the system state tree.

---

*An overcooling event of any significance will cause primary system coolant contraction, resulting in the reactor coolant system pressure being lowered to the extent that a requirement for an RCP trip may occur.

†Loop flow stagnation is discussed in detail in Chapter 4 of this report.

‡It should also be noted that the procedures may be changed in the near future. This change would cause the pump trip to be based on subcooling criteria. This could result in the pumps remaining on during certain secondary side events, such as steam-line breaks. Under these conditions the analysis presented in this report would appear to be an overprediction of the risk. Some calculations made to quantify this condition are discussed later in this report.

As discussed in Section 2.3.4, the reactor coolant loop pressure is controlled by the pressurizer heaters, the pressurizer spray valves, two pressurizer power-operated relief valves (PZR PORVs), and three pressurizer safety valves (PZR SVs).

The operating mode of the pressurizer heaters has little effect on cooling sequences and was not included in the system state tree. For any overcooling event of significance, the pressurizer will drain and the heaters will automatically turn off. This assumed proper operation of the heaters need not be addressed in the system state tree. Even if the heaters failed to turn off with low pressurizer level, their continued operation would not affect the RCS pressure (although heater damage could be expected). Restoration of pressurizer water level would permit the heaters to turn back on and function as required. The additional effect of the heaters is considered to be small, and, in any case, the assumption that they will operate as designed accounts for their effect.

The pressurizer spray valve operation was also eliminated from the system state tree, since tripping the reactor coolant pumps stops the normal spray flow regardless of spray valve position. This leaves only the auxiliary spray from the CVCS. Even though the auxiliary pressurizer spray can have a significant effect on repressurization, it can be initiated only manually, which makes it an operator action that is addressed on an event-specific basis on the event trees and not on the system state trees.

Thus, the system state tree for the RCS is limited to the control of the coolant loop pressure, which, in turn, is limited to the potential states of the PZR PORVs and the PZR SVs. The system state tree headings and the potential branches for each heading are described in Table 3.1.

3.2.3. Main Steam System

The main steam system was described in Section 2.3 as consisting of eight major subsystems: (1) the steam generators (SGs), (2) the main turbine stop valves and governor valves, (3) the steam dump valves (SDVs), (4) the steam power-operated relief valves (STM PORVs), (5) the main steam-line isolation valves (MSIVs), (6) the main steam-line safety valves (SSVs), (7) the steam-line flow restrictors, and (8) the main steam check valves.

Of the eight subsystems, the steam generators and the flow restrictors have passive functions and are not included on the system state tree. The system state tree headings used to define the condition of each of the remaining subsystems, together with descriptions of the possible branches for each heading, are presented in Table 3.2.

3.2.4. Feedwater and Condensate System

In Section 2.4 of this report the seven major subsystems of the feedwater and condensate system were identified as: (1) the condensate storage tank, (2) the condenser, (3) the condensate pumps, (4) the feedwater heaters, (5) the main feedwater (MFW) pumps, (6) the MFW control valves and bypass valves, and (7) the MFW isolation valves.

Table 3.1. Description of state tree headings and potential branches for reactor coolant pressure control system*

System State Tree Heading	Heading Description and Discussion	Descriptions of Conditional Branches
Max RCS pressure < lift pressure for PZR PORVs.	This thermal-hydraulic parameter identifies the need for components in this system to function. If the pressure < lift set point, no components in this system are required to change state. If the pressure > lift set point, some components will be required to change state. Thus, two branches are required under this heading.	The two branches required are: **(1) Pressure < PZR PORV lift set point.** **(2) Pressure ≥ PZR PORV lift set point.**
PZR PORVs open on demand.	Given that the PZR PORVs are required to open, the potential exists for one or both to fail to open. A failure for a PZR PORV to open could lead to the opening of a PZR SV, which is not isolatable. The number of branches required depends on the initial thermal-hydraulic branching.	If the RCS pressure < PZR PORV lift set point, no branches are required under this heading. If the RCS pressure ≥ PZR PORV lift set point, three branches are required: **(1) Both PZR PORVs open.** **(2) One PZR PORV fails to open.** **(3) Both PZR PORVs fail to open.**
Max RCS pressure < lift pressure for PZR SVs.	This thermal-hydraulic parameter identifies the demand for PZR SVs. The number of branches required depends on the initial thermal-hydraulic branching.	If the RCS pressure < PZR PORV lift set point, it will be < PZR SV lift set point, and no branches are required. If the RCS pressure > PZR PORV lift set point, two branches are required: **(1) PZR SV demand exists.** **(2) PZR SV demand does not exist.**
PZR SVs open on demand.	Given that the PZR SVs are required to open, the potential exists for one, two or all three to fail to open.	Four branches are required: **(1) All three PZR SVs open.** **(2) One PZR SV fails to open.** **(3) Two PZR SVs fail to open.** **(4) All three PZR SVs fail to open.**

The condensate storage tank, the condenser, and the feedwater heaters have passive functions and thus are not considered in the system state tree. The active functions of the condensate pumps, the MFW pumps, and the MFW control and isolation valves provide feedwater flow in their operating (open) condition while stopping flow in their tripped (closed) condition. These component functions have been grouped under the heading of "main feedwater flow isolated on demand."

Table 3.1. (Continued)

System State Tree Heading	Heading Description and Discussion	Descriptions of Conditional Branches
PZR SVs close on low pressure.	For those branches involving the opening of the PZR SVs, the failure of the valves to close on low pressure must be considered. The number of branches required is determined by the number of PZR SVs that opened.	If only one PZR SV has opened, two branches are required: **(1) PZR SV closes.** **(2) PZR SV fails to close.** If only two PZR SVs have opened, three branches are required: **(1) Both PZR SVs close.** **(2) One PZR SV fails to close.** **(3) Both PZR SVs fail to close.** If all three PZR SVs have opened, four branches are required: **(1) All three PZR SVs close.** **(2) One PZR SV fails to close.** **(3) Two PZR SVs fail to close.** **(4) All three PZR SVs fail to close.**
PZR PORVs close on demand.	For those branches involving the opening of the PZR PORVs, the failure of the valves to close on demand must be considered. The number of branches required is determined by the number of PZR PORVs that opened.	If only one PZR PORV has opened, two branches are required: **(1) PZR PORV closes.** **(2) PZR PORV fails to close.** If both PZR PORVs have opened, three branches are required: **(1) Both PZR PORVs close.** **(2) One PZR PORV fails to close.** **(3) Both PZR PORVs fail to close.**
Block valves close.	A block valve is provided to isolate each PZR PORV if it fails to close automatically. The number of branches is determined by the number of valves demanded.	If only one block valve is demanded, two branches are required: **(1) Block valve closes.** **(2) Block valve fails to close.** If both block valves are demanded, three branches are required: **(1) Both block valves close.** **(2) One block valve fails to close.** **(3) Both block valves fail to close.**

*Acronyms used in this table are: RCS = reactor coolant system, PZR PORV = pressurizer power-operated relief valve, and PZR SV = pressurizer safety valve.

Following any reactor trip, the MFW regulating valves are required to close and the bypass valves are opened (manually) to about 5% flow. This action is referred to as "main feedwater runback." The question of whether runback occurs must be addressed in the system state tree.

Table 3.2. Description of state tree headings and potential branches for the main steam system*

System State Tree Heading	Heading Description and Discussion	Descriptions of Conditional Branches
Turbine stop valves and governor valves close.	This step identifies whether the turbine trips on demand. Closure of the turbine stop valves or turbine governor valves is the function considered. Thus, two branches are required under this heading.	The two branches required are: **(1) All stop valves or governor valves close.** **(2) One or more stop valve(s) and one or more governor valve(s) fail to close.**
SDVs open.	High T_{avg} or high steam pressure thermal-hydraulic condition could cause the SDVs to the condenser to open.	Six branches are required: **(1) All five SDVs open.** **(2) One SDV fails to open.** **(3) Two SDVs fail to open.** **(4) Three SDVs fail to open.** **(5) Four SDVs fail to open.** **(6) All five SDVs fail to open.**
STM PORVs open.	High T_{avg} or high steam pressure thermal-hydraulic condition could result in the STM PORVs opening.	Four branches are required: **(1) All three STM PORVs open.** **(2) One STM PORV fails to open.** **(3) Two STM PORVs fail to open.** **(4) All three STM PORVs fail to open.**
Steam pressure < SRV lift set point.	This thermal-hydraulic function opens the 12 SRVs (four on each of three lines), which lift in pairs at various pressures. It is assumed that even if some SRVs fail to open, one or more SRV(s) will eventually open on each line if the steam pressure > SRV lift pressure.	Two branches are required: **(1) Steam pressure < SRV lift set point.** **(2) Steam pressure > SRV lift set point.**
SRVs close on demand.	Given that one or more pairs of SRVs open, the question of whether or not they close on demand must be examined. Since both a single valve failure and multiple valve failures are considered to be small steam-line breaks, they need not be treated individually.	Four branches are required: **(1) All twelve SRVs close.** **(2) One or more SRVs fail to close on one line.** **(3) One or more SRVs fail to close on two lines.** **(4) One or more SRVs fail to close on all three lines.**
STM PORVs close on demand.	Failure of a STM PORV to close is equivalent to a small steam-line break upstream of the MSIVs.	Four branches are required: **(1) All three STM PORVs close.** **(2) One STM PORV fails to close.** **(3) Two STM PORVs fail to close.** **(4) All three STM PORVs fail to close.**

Table 3.2 (Continued)

System State Tree Heading	Heading Description and Discussion	Descriptions of Conditional Branches
SDVs close on demand.	Failure of the SDVs to close is equivalent to a steam-line break downstream of the MSIVs.	Six branches are required: **(1) All five SDVs close.** **(2) One SDV fails to close.** **(3) Two SDVs fail to close.** **(4) Three SDVs fail to close.** **(5) Four SDVs fail to close.** **(6) All five SDVs fail to close.**
MSIVs close on demand.	Closure of the MSIVs on demand can isolate failed-open SDVs.	Four branches are required: **(1) All three MSIVs close.** **(2) One MSIV fails to close.** **(3) Two MSIVs fail to close.** **(4) All three MSIVs fail to close.**

*Acronyms used in this table are: SDV = steam dump valve, STM PORV = steam power-operated relief valve, SRV = safety relief valve, and MSIV = main steam isolation valve.

The coupling of components on a functional basis produces the system state tree headings and possible branches identified and explained in Table 3.3.

3.2.5. Auxiliary Feedwater System

As described in Section 2.5, the principal active components of the auxiliary feedwater (AFW) system are: (1) the AFW pumps, (2) the AFW control valves, and (3) the AFW block valves.

The control signals and functions of these components are used to construct the system state tree headings and branches described in Table 3.4. It should be noted that the AFW system state tree is constructed to consider three flow conditions to the steam generators: maximum flow, normal flow, and no flow.

3.2.6. Safety Injection System

The safety injection (SI) system consists of three types of coolant injection processes: (1) high-pressure injection, (2) coolant injection from the accumulators, and (3) low-pressure injection. [As noted in Chapter 2, two low-pressure injection (LPI) pumps also serve as residual heat removal (RHR) pumps.]

On a first evaluation it appeared that failure of any of the injection processes would be more of an undercooling concern that an overcooling problem, and, therefore, the conservative perspective would be to assume that all components would work when required and no

Table 3.3. Description of state tree headings and potential branches for main condensate and feedwater system*

System State Tree Heading	Heading Description and Discussion	Descriptions of Conditional Branches
MFW regulating valves close.	Following a reactor trip, the MFW system is required to run back to prevent a steam generator overfeed. The MFW regulating valves will throttle to control the steam generator level. In addition, a reactor trip and low T_{avg} will close the control valves. Rather than identify several branches to cover the various levels of runback possible, the branches under this heading bound the potential conditions by assuming that complete runback occurs (i.e., valves close) or that no runback occurs (i.e., valves fail to close).	Four branches are required: **(1) All three MFW regulating valves close.** **(2) One MFW regulating valve fails to close.** **(3) Two MFW regulating valves fail to close.** **(4) All three MFW regulating valves fail to close.**
MFW pumps trip.	Upon occurrence of an SI signal or a high SG level signal, the MFW pumps (two) trip. This is a redundant mechanism to prevent steam generator overfeed.	Three branches are required: **(1) Both MFW pumps trip.** **(2) Only one MFW pump trips.** **(3) Both MFW pumps fail to trip.**
MFW isolated on demand.	Upon occurrence of an SI signal, the MFIVs close, stopping all flow in the MFW lines.	Four branches are required: **(1) All three MFW lines are isolated.** **(2) Two MFW lines are isolated.** **(3) One MFW line is isolated.** **(4) No MFW lines are isolated.**
SI signal generated on demand.	The SI signal trips the MFW pumps, closes the MFIVs and the MFW regulating valves, and prevents the bypass valves from opening.	Two branches are required: **(1) SI signal is generated.** **(2) SI signal is not generated.**

*Acronyms used in this table are: MFW = main feedwater, SI = safety injection, SG = steam generator, and MFIV = main feedwater isolation valve.

system state tree would be necessary. However, further evaluation of an SI failure revealed two potential overcooling factors. First, an initial SI failure with recovery at some later time could affect the loop flow characteristics and the cooldown rate. Second, an SI failure during a loss-of-coolant accident (LOCA) could result in low-pressure injection and accumulator tank flow at a considerably earlier time. This, coupled with a potential repressurization from the charging pumps and thermal expansion, could have PTS consequences. Thus, an SI failure is considered on the system state tree. Although failure of accumulators and low-pressure injection would most likely be of greater concern for undercooling sequences than for overcooling sequences, failure of these functions is retained in the system state tree for completeness. This results in the tree headings described in Table 3.5.

Table 3.4. Description of state tree headings and potential branches for auxiliary feedwater system*

System State Tree Heading	Heading Description and Discussion	Descriptions of Conditional Branches
AFW pump breakers open.	This signal will start the two motor-driven AFW pumps. Two branches are required to describe this system state.	The two branches required are: **(1) AFW pump breakers open.** **(2) AFW pump breakers fail to open.**
Two of three SGs give low-level signal.	A low-level signal of < 15% volume from any two of the three steam generators will start the steam-driven AFW pump.	Two branches are required: **(1) Signals from two SGs occur.** **(2) Signals from two SGs do not occur.**
One of three SGs gives low-level signal.	A low-level signal of < 15% volume from any one of the three steam generators will start the motor-driven AFW pumps.	Two branches are required: **(1) Signal from one SG occurs.** **(2) Signal from one SG does not occur.**
Motor-driven AFW pumps operate.	Given that the MFW pump breakers open or that a low-level signal from one SG occurs, the two motor-driven pumps should start and deliver water to the steam generators. The potential for failure of the pumps to start must be considered.	Three branches are required: **(1) Both motor-driven AFW pumps start.** **(2) One motor-driven AFW pump fails to start.** **(3) Both motor-driven AFW pumps fail to start.**
Steam-driven AFW pump operates.	Given that low-level signals from two SGs occur, the steam-driven AFW pump should start and deliver water to the steam generators. The potential for failure of the pump to start must be considered.	Two branches are required: **(1) Steam-driven AFW pump starts.** **(2) Steam-driven AFW pump fails to start.**
Nominal AFW flow occurs.	For those sequences in which flow occurs, the level of flow must be considered. The flow is controlled at each pump, rather than to each steam generator. Nominal flow rate and overfeed are the only options considered. (A low flow can be considered as no flow and treated with the case in which AFW flow does not occur; i.e., pumps do not start.)	Two branches are required: **(1) Nominal flow occurs.** **(2) Overfeed occurs.**

*Acronyms used in this table are: AFW = auxiliary feedwater, and SG = steam generator.

3.2.7. Chemical and Volume Control System

Four system functions were considered for the chemical and volume control system (CVCS) state tree: (1) letdown isolation, (2) letdown flow control, (3) charging flow heating, and (4) charging flow.

Table 3.5. Description of state tree headings and potential sequence branches for the safety injection system*

System State Tree Heading	Heading Description and Discussion	Descriptions of Conditional Branches
RCS pressure > HPI pump discharge pressure of 1500 psig.	This is a thermal-hydraulic test that determines whether or not HPI can physically occur. Two branches are used to examine this system state.	The two branches required are: **(1) RCS pressure > 1500 psig.** **(2) RCS pressure ≤ 1500 psig.**
HPI occurs on demand.	For those sequences in which reactor coolant pressure ≤ 1500 psig, the question as to whether or not HPI is activated must be addressed.	Two branches are required: **(1) HPI occurs.** **(2) HPI fails to occur.**
RCS pressure > accumulator pressure of 600 psig.	This is a thermal-hydraulic test that determines whether the accumulator water can discharge into the RCS.	Two branches are required: **(1) RCS pressure > 600 psig.** **(2) RCS pressure ≤ 600 psig.**
Accumulators discharge.	For those sequences in which RCS pressure ≤ 600 psig, the question as to whether the accumulators will actually discharge must be addressed.	Two branches are required: **(1) Accumulators discharge.** **(2) Accumulators fail to discharge.**
RCS pressure > LPI pump discharge pressure of 175 psia.	This is a thermal-hydraulic test that determines whether or not LPI water can enter the RCS.	Two branches are required: **(1) RCS pressure > 175 psia.** **(2) RCS pressure ≤ 175 psia.**
LPI occurs on demand.	For sequences in which the RCS pressure falls below the LPI pump discharge pressure, the question as to whether or not coolant is injected must be addressed.	Two branches are required: **(1) LPI occurs.** **(2) LPI fails to occur.**

*Acronyms used in this table are: RCS = reactor coolant system, HPI = high-pressure injection, and LPI = low-pressure injection.

Letdown isolation and letdown flow control can be coupled together as one function: letdown flow. A letdown isolation signal occurs whenever a low pressurizer level signal is generated and thus is expected to occur for any overcooling transient. When letdown isolation occurs, letdown flow is stopped. Failure of both isolation valves to close or the failure of the signal will cause failure of letdown isolation. In this case the flow control valves must be examined to identify the flow state. A low pressurizer level will cause the flow control valves to stop the flow. Failure of these valves to run back will result in the normal letdown flow continuing. Any intermediate flow rate is considered to be small both in size and in consequence. Thus letdown flow is not considered for system state description.

Heating of the charging flow is performed by the regenerative heat exchanger. The heat source for this heat exchanger is letdown coolant downstream of the letdown stop valves.

Thus, when letdown isolation occurs, this heat source is automatically lost. The regenerative heat exchanger is a passive component in either mode and is not considered on the system state tree.

The low pressurizer level signal which isolates letdown also causes all operating charging pumps to accelerate to full speed. Anything less than full flow will result in less cold water entering the primary coolant system and a slower repressurization rate. Thus, failure of the charging pumps to start is not considered. However, runback of the charging flow late in the transient is very important since failure to run back would result in higher RCS pressures. Therefore, runback of charging pump flow must be considered. But since this was the only heading to be addressed under the CVCS system, no system state tree was generated for the CVCS. Instead, the following two assumptions were made which define the system for overcooling events:

(1) Letdown isolation will occur whenever a pressurizer low-level signal is generated.

(2) All operating charging pumps will accelerate to full speed and provide full flow whenever a pressurizer low-level signal is generated.

Charging flow will be automatically controlled to maintain pressurizer level when it is recovered. Failure of this control function is addressed, as appropriate, in the initiator-specific event trees.

3.3. Potential Initiating Events

In the preceding section a set of system state trees was identified to describe potential system responses to overcooling event initiators. In this section, specific initiating events considered to have a potential for causing significant cooling of the reactor vessel are identified and discussed.

The first step in identifying potential initiating events was the examination of the RCS to determine what events would reduce the temperature in the reactor vessel downcomer region. In general, the temperature in the downcomer region can be reduced by the injection of cold water into the vessel inlet lines; by a net removal of energy from the RCS via the steam generators; or by a breach in the primary system, resulting in significant RCS depressurization [a loss-of-coolant accident (LOCA)]. The initiating events identified as potentially leading to one of these cooling mechanisms fall into eight classes as follows:

(1) Events causing a decrease in the charging water enthalpy.

(2) Events causing an excess steam flow from the steam generators.

(3) Events causing a decrease in the feedwater enthalpy.

(4) Events causing feedwater overfeed.

(5) Inadvertent safety injection (SI) events.

(6) Loss-of-coolant accidents (LOCAs).

(7) Events consisting of pressurizer pressure control failures.

(8) Events leading to steam generator tube ruptures.

These classes of events were examined and initiator events specific to H. B. Robinson Unit 2 were identified as described below.

3.3.1. Events Causing a Decrease in the Charging Flow Enthalpy

The charging flow enthalpy can be reduced by: (1) stopping the heat source to the regenerative heat exchanger (that is, stopping the letdown flow), (2) increasing the charging flow in excess of the letdown flow, or (3) both isolating the letdown flow and actuating (manually) the three charging pumps.

The maximum enthalpy decrease would be caused by isolation of letdown and manual actuation of the three charging pumps, but since this event is addressed separately in Section 3.3.5, it will not be discussed here.

With the normal charging flow of 45 gpm, a loss of the regenerative heat exchanger would result in a decrease of 363°F or more in the charging flow temperature.* If it is assumed that perfect loop flow mixing (see Section 4.4) and a simple mass-energy balance exist, which is the normal assumption, the loop flow temperature would be reduced by ~1°F. This is clearly not an overcooling event and thus loss of the heat exchanger is not considered to be an initiating event.

An increase in the charging flow from nominal to maximum would increase the flow rate from 45 gpm to 105 gpm. The resulting water temperature would be at 279°F rather than at the nominal temperature of 493°F. Again, if perfect loop flow mixing and a simple mass-energy balance are assumed, the loop flow temperature would drop by only ~1°F, which is not an overcooling event. Thus increasing the charging flow is not considered to be an initiating event.

In summary, events decreasing the charging flow enthalpy will not lead to overcooling transients in H. B. Robinson Unit 2.

3.3.2. Events Causing an Excess Steam Flow from the Steam Generators

Events causing an abnormally high steam flow from the steam generators result in the depressurization of the steam generator(s) and an increased energy removal rate from the primary system. This class of potential initiating events includes the following: (1) a large steam-line break, (2) a small steam-line break, (3) the STM PORVs or SDVs opening and failing to close, and (4) one or more main steam-line SVs opening and failing to close. In addition, after a reactor trip has occurred, the failure of some pieces of equipment could also result in an excess steam flow. Thus, an additional initiating event is

*363°F is the normal increase in charging flow temperature across the regenerative heat exchanger. Direct injection of water from unheated tanks (e.g., Radwaste Storage Tank) would decrease the charging flow temperature further. For this discussion, the energy stored in the heat exchanger, charging piping, etc. is neglected.

(5) a reactor trip followed by the opening of the STM PORVs or SDVs as required, but with one or more of the STM PORVs or SDVs failing to close.

3.3.2.1. Large steam-line break

Potential large steam-line break events are characterized by two variables: the location of the pipe break and the core decay-heat level, which is the primary heat source following the reactor trip accompanying all steam-line pipe breaks.

The extent and duration of the steam blowdown depend on whether the break is upstream or downstream of the main steam check valves and the main steam-line isolation valves (MSIVs). Because these valves are very close together, the probability of a break between them is considered to be small compared to the likelihood of a break in the remainder of the steam piping. Thus when reference is made in this report to upstream or downstream of the MSIV, we are actually referring to upstream or downstream of both the MSIV and the check valve on a line.

The check valves are downstream of the MSIVs and are intended to prevent the backflow steam from the unbroken steam lines to a steam-line break inside the containment. A break upstream of the MSIV, however, is not isolatable and one steam generator will blow down completely. The MSIVs are designed to prevent blowdown of more than one steam generator and to isolate the steam generators from breaks downstream of the valves.

Examination of the pipe configuration showed that pipe welds, pipe elbows, extraction lines, etc. were about equally distributed upstream and downstream of the MSIVs. Since these are considered to be the most probable pipe break locations, it was assumed that a pipe break was equally likely to be upstream or downstream of the MSIV.*

The core decay-heat source following the reactor trip can impact the downcomer temperature in two ways:

(1) It can promote natural loop circulation and mixing of the SI and loop flows.

(2) It can increase the downcomer temperature. [Whenever loop flow exists, the reactor coolant heated in the core will be transported to the downcomer (vessel inlet) region.]

The magnitude of the core decay-heat source over the two-hour analysis period used in this study† was determined by applying the ANS decay-heat curve shown in Figure 3.1.‡ The curve shows that immediately following a reactor trip, the decay-heat power would be

*It should be noted that the grade of piping used upstream of the MSIVs would imply a lower failure potential than that used downstream of the MSIVs. However, since the steam-line pipe failure mechanisms are not fully understood, the effect of the different grades of piping can not be realistically quantified. Therefore, the same failure probability is used for both upstream and downstream of the MSIVs.

†The analysis period is defined as two hours for reasons discussed in Chapter 4.

‡The curve shown in Figure 3.1 assumes infinite core operation time prior to shutdown. The effect of using this curve rather than an operation-specific curve is included in the uncertainty of the temperature as applied in Chapter 7.

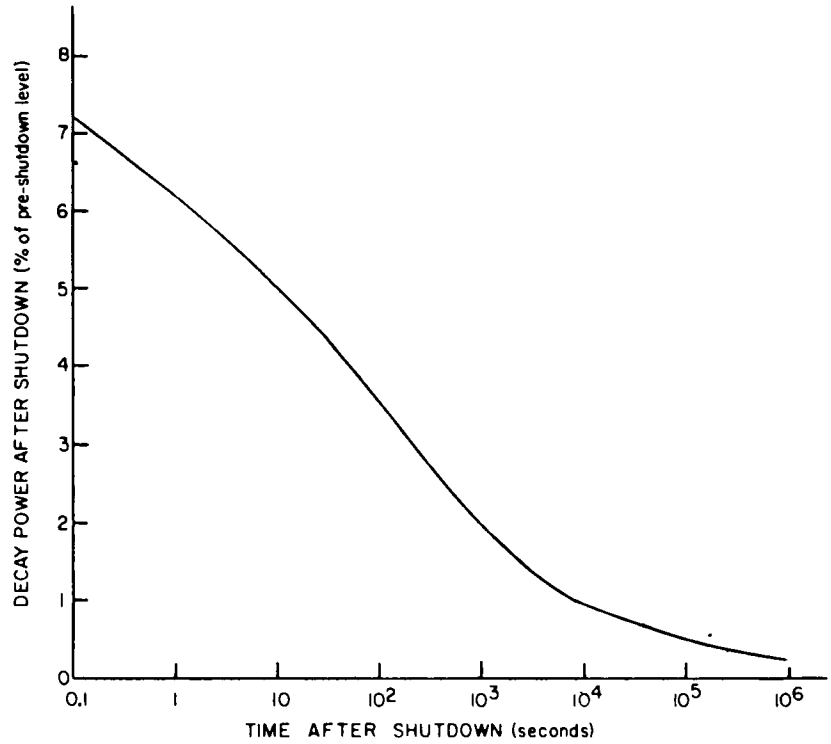

Figure 3.1. Thermal power after reactor shutdown.

~7% of the preshutdown power, decreasing to ~1.2% after two hours (7200 seconds). If it is assumed that the plant has been operating at full power (2300 MWt), then 161 MWt would be generated as decay heat immediately following a reactor trip and ~19 MWt would be generated two hours after the trip (7200 seconds). Based on a review of the operating history of H. B. Robinson Unit 2 during 1980, 1981, and 1982, this decay-heat production would apply to 98.1% of the operational time of the plant (i.e., 98.1% of the time excluding cold shutdown). Thus this condition was deemed one for which the effects of a large steam-line break should be considered.

For the remaining 1.9% of its operational time, H. B. Robinson Unit 2 is in a hot 0% power or startup condition. Decay heat associated with a hot 0% power condition depends upon the length of time since the previous reactor shutdown.* A review of the plant's history revealed that in most cases (~80% of the time) plant startups occur within four days (~100 hours) after a reactor trip has occurred. Figure 3.1 shows that at 100 hours the decay-heat production would be ~8.3 MWt over a two-hour transient period.† This was considered to be a second decay-heat condition for which the effects of a large steam-line break should be considered.

---

*Since H. B. Robinson Unit 2 is already in operation and since full core replacement is extremely unusual, the initial startup with a full fresh fuel core is not considered.

†It is assumed that the plant was operating at full power prior to the reactor trip or shutdown.

Finally, there are scheduled outages and major incidents for which the time between shutdown and startup would be as much as 100 days or more. The decay heat for this condition would be less than 1 MWt. Rather than perform an analysis for a third decay-heat condition, it was decided to examine the sensitivity of the downcomer temperature to changes in decay heat for the hot 0% power decay-heat condition at 100 hours after shutdown. The effects of potentially lower decay-heat events would then be reflected as part of the uncertainty.

On the basis of the above, two large steam-line break initiating events were selected for examination for their potential importance:

- A large steam-line break at full power with decay-heat production followed during the two-hour analysis period.
- A large steam-line break at hot 0% power with the decay-heat production based on the heat generated approximately 100 hours after shutdown.

3.3.2.2. Small steam-line break

As for the case of a large steam-line break, potential small steam-line break events resulting in excess steam flow are characterized by two variables: the location of the break and the core decay-heat level. Many of the same considerations for the large break also apply to the small break.

The most probable small-break locations are in the small steam extraction lines that come off of the main steam lines. At H. B. Robinson Unit 2, almost all of the steam extraction lines are in the 4- to 6-inch range. The lines to the STM PORVs are 6 inches, as are those for the 12 SRVs. Breaks upstream and downstream of the MSIVs are assumed to be equally likely.

For the same reasons discussed above for the large break, two decay-heat levels are important for small breaks. Thus the small steam-line break initiating events to be examined also fall in two categories:

- A small steam-line break at full power with decay-heat production followed during the two-hour analysis period.
- A small steam-line break at hot 0% power with the decay-heat production based on the heat generated approximately 100 hours after shutdown.

3.3.2.3. Failed-open STM PORVs or SDVs

STM PORVs and SDVs which open and fail to close are equivalent to small steam-line breaks. Since their locations are already known, only the decay-heat level must be determined. For these events, the two decay-heat levels defined above were again assumed, that is, the decay-heat level following full-power operation and at hot 0% power.

If during operation the reactor is tripped, the turbine is also tripped, and this causes the SDVs and, possibly, the STM PORVs to automatically open for a brief period of time. Failure of one or more of these valves to subsequently close has the same effect as a valve or valves spuriously opening at power, since the reactor is expected to trip soon after the valves open.* Thus those events involving STM PORVs or SDVs which spuriously open and in which a reactor trip occurs have been grouped together with STM PORV and SDV failures to close following a reactor trip. These events are discussed in Section 3.3.2.5 below.

At hot 0% power, there is no requirement for the STM PORVs to operate (to open). However, they will open periodically to control pressure and potentially could fail open. This event was treated as a small steam-line break initiator and was not analyzed separately.

3.3.2.4. Main steam-line safety valves open and fail to close

A steam-line safety valve (SSV) that fails to close cannot be isolated. Thus, SSV failures of this type will behave the same as the small steam-line breaks upstream of the MSIV discussed in Section 3.3.2.2. As a result, SSV failures of this type were grouped into the small steam-line break category and were not examined separately. (Note: If multiple breaks occur, they may be grouped into the large steam-line break category.)

3.3.2.5. Reactor trip

Although as noted in Section 3.3.2.3, a reactor trip is not an overcooling initiating event by itself, a reactor trip causes a turbine trip, which, in turn causes the SDVs to open and may possibly cause the STM PORVs also to open. Failure of the valves to close would result in excess steam flow. Thus, an additional potential initiating event selected for examination is

- A reactor trip from full power.

Failure of the main turbine to trip following a reactor trip (open path to the condenser) is a special case of the reactor-trip-induced excess steam flow event. Owing to functional similarity of this event to a large steam-line break occurring downstream of the MSIV at full power, the turbine trip failure was grouped with the large steam-line pipe break cases and was not examined separately.

3.3.3. Events Causing a Decrease in the Feedwater Enthalpy

Two initiating events can cause a decrease in the feedwater enthalpy: (1) a loss of feedwater heaters, and (2) the initiation of auxiliary feedwater flow to the steam generators.

---

*The reactor trip may be either an automatic trip or a manual trip. For single STM PORV spurious openings, the reactor trip may not occur.

A loss of feedwater heaters does not appear to result in an overcooling event, since sufficient energy is stored in the feedwater heaters and piping to prevent a rapid decrease in main feedwater temperature following a reactor trip. This is exemplified by the fact that the steam supply to the feedwater heaters is isolated following every turbine trip and the resulting feedwater temperature change observed is small. Thus, the loss of feedwater heaters is not considered to be an important initiating event. However, the effects of the loss of steam supply to the feedwater heaters which accompany other overcooling initiator events will be considered along with those initiator events.

Similarly, the effects of auxiliary feedwater flow will be minimal. While the auxiliary feedwater temperature is lower than the main feedwater temperature and thus feedwater enthalpy will decrease whenever auxiliary feedwater flow is initiated, the auxiliary feedwater flow is small with respect to main feedwater flow or steam generator (liquid) volume. The effects of auxiliary feedwater flow on the coolant temperature become more important when main feedwater flow is lost and auxiliary feedwater flow is actuated. Thus, another specific potential initiating event to be considered is

- Loss of main feedwater flow.

3.3.4. Events Causing Feedwater Overfeed

Two types of feedwater overfeed events are of interest as potential overcooling initiating events: (1) main feedwater overfeed, and (2) auxiliary feedwater overfeed.

A main feedwater overfeed is not considered a significant overcooling event prior to a reactor trip; thus, only those main feedwater overfeed events that follow a reactor trip need be considered. This type of event can be characterized by an overfeed resulting from a failure of the feedwater system to run back following a reactor trip. The initiating event is a reactor trip and the failure associated with the initiating event is a failure of feedwater to run back on one or more lines.

The relatively low temperature of the auxiliary feedwater makes an overfeed of auxiliary feedwater potentially significant even though the maximum flow rate is small compared to the main feedwater flow rate. Spurious auxiliary feedwater actuation is not considered as an initiating event. With a spurious actuation, the high main feedwater flow rate with its relatively high temperature and the large volume of water in the steam generator would minimize the overcooling effects. Only those auxiliary feedwater overfeeds following a required actuation of auxiliary feedwater (isolation of main feedwater) will be considered.* In these cases, the steam generator level will be low and the overfeed will have the potential to cause a higher cooldown rate.

The auxiliary feedwater overfeed condition can be reached only if some initiating event which leads to auxiliary feedwater actuation has occurred. The appropriate initiating events are a reactor trip and large and small steam-line breaks, which in themselves are overcooling events but which also result in auxiliary feedwater actuation.

*This is also the most probable occurrence of an auxiliary feedwater overfeed.

3.3.5. Inadvertent Safety Injection Events

With a maximum high-pressure safety injection (HPI) pump discharge pressure of 1500 psia, an inadvertent safety injection (SI) actuation will not result in SI flow while the RCS is pressurized. The spurious signal will cause a reactor trip and consequential reduction in pressurizer level. In response to the reduced pressurizer level, the charging pump speed increases and the letdown line is isolated. The resulting pressure is expected to remain above the HPI flow pressure and thus the event will not result in a significant decrease in the reactor coolant temperature (see Section 3.3.1). Therefore, the inadvertent SI signal is not considered an overcooling initiator.

3.3.6. Loss-of-Coolant Accidents

The categories of potential loss-of-coolant accidents (LOCAs) which lead to overcooling are the most difficult to define due to the potential for repressurization and the importance of loop flow stagnation. A review of potential LOCA sizes was therefore considered in defining LOCA categories.

The first category was composed of those breaks for which HPI could fully compensate and thus the pressure would stabilize at some level slightly below the HPI shutoff head. In terms of size, this corresponds with breaks that are less than $\sim$0.016 ft^2. It should be noted that single PZR PORV or SRV failures and reactor coolant pump seal failures* are also included in this category of "small-break LOCAs."

The second category of LOCA sizes includes those for which HPI can not keep up with the flow out the break but for which the pressure decrease is gradual owing to a partial compensation from the HPI flow. Identified as "medium-break LOCAs," these break sizes run from $\sim$0.016 ft^2 to $\sim$0.05 ft^2,† the most probable size appearing to be a break of one of the many 2-inch lines which come off of the primary piping.‡ This corresponds to a break size of $\sim$0.02 ft^2. However, based on analyses performed by Westinghouse, it appeared that a break equivalent to a 2.5-inch line would result in early loop flow stagnation. Since this condition was considered to be potentially important, the 2.5-inch break size was also considered in the analysis of this group.§

---

*The largest break flows observed for pump seal failures have been about 400 gal/min or $\approx$160,000 lb/hr. Thus the pump seal failures would be in the first LOCA category.

†The 0.05-ft^2 limit was chosen in the following manner. From a review of generic parametric studies of PTS, it was felt that a flow out the break equivalent to twice the HPI flow would substantially reduce the PTS risk owing to the rapid pressure reduction. For conservatism, breaks as large as three times the HPI flow, $\sim$0.05 ft^2, were included in this second category.

‡It appears that breaks in this small size range will occur most often as small-line breaks in extraction or supply lines rather than as a small hole forming in a large pipe.

§As discussed in Chapter 4, thermal-hydraulic analysis of this event did produce relatively cold temperatures. However, the accompanying pressure was so low that the probability of the generation of a through-the-wall crack in the pressure vessel was very small. There was some concern that the 2-inch break might also produce relatively cold temperatures, but at a somewhat higher pressure. As a result, late in the analysis two additional LOCA calculations were performed, each of which incorporated the 2-inch break. Stagnation was predicted with somewhat higher pressure. However, the pressure increase was not high enough to greatly increase the failure probabilities associated with the medium-break LOCA.

The third category of LOCA sizes includes all breaks larger than 0.05 ft^2. Without isolation of the break, a rapid depressurization will severely limit the potential for a vessel failure. Thus the only concern for breaks of this size is whether or not there is a break larger than 0.05 ft^2 which at some later time can be isolated. A review of the H. B. Robinson Unit 2 system revealed several 4- and 12-inch lines, but no potential break locations that could be isolated* were identified. Thus no LOCAs in this size category were considered as PTS initiators.

In summary, it was determined that two LOCA sizes should be considered as initiating events, and, as is the case for steam-line breaks, they each must be considered for two power conditions. Thus, four LOCA initiating events must be addressed as follows:

- Small-break LOCA at full power.
- Medium-break LOCA at full power.
- Small-break LOCA at hot 0% power.
- Medium-break LOCA at hot 0% power.

3.3.7. Events Consisting of Pressurizer Pressure Control Failures

The PZR PORV control signal failures and PZR SV failures have already been identified. An additional pressure control failure of interest could be the spurious actuation of the pressurizer sprays, which would decrease the pressure and could eventually result in SI actuation and the tripping of the reactor coolant pumps. A loss of pressurizer spray flow would follow and the depressurization would be terminated. Thus, even though safety injection actuation occurred, the actual SI flow would not be significant. As a result, this is not considered a potential PTS event initiator.

3.3.8. Events Leading to Steam Generator Tube Rupture

A rupture of a steam generator tube has many of the characteristics of a small-break LOCA that cannot be isolated. With normal operator action, or even without operator action, the effects of the rupture appear to be less severe than those of the LOCAs that were analyzed and the consequences associated with a steam generator tube rupture should be bounded by LOCA sequences. Nevertheless it was decided to address this event specifically and the following was included as a potential initiating event to be analyzed:

- A steam generator tube rupture.

*Several of these lines can be isolated. However, the isolation valves are upstream of multiple check valves.

3.3.9. Summary

In the preceding sections, 11 potential initiating events for overcooling have been identified:

(1) A large steam-line break at hot 0% power.

(2) A small steam-line break at hot 0% power.

(3) A large steam-line break at full power.

(4) A small steam-line break at full power.

(5) A reactor trip from full power.

(6) Loss of main feedwater.

(7) A small-break LOCA at full power.

(8) A medium-break LOCA at full power.

(9) A small-break LOCA at hot 0% power.

(10) A medium-break LOCA at hot 0% power.

(11) Steam generator tube rupture.

3.4. Initiator-Specific Event Trees

Event trees have been developed for each of the initiating events identified in Section 3.3. This development involved the identification of applicable system functional conditions and potential operator actions.

The system state trees described in Section 3.2 were used to identify those systems or components that are required to function and whose failure will have a potentially adverse effect on overcooling transients. It should be noted, as discussed earlier, that since these trees are developed on a functional basis, the branching on the trees associated with system or component actions may be more complex than binary success and failure branches.

Operator actions were identified from a review of procedures associated with each specific initiating event. These operator actions were grouped into two categories:*

(1) Actions involving recovery of a failed system function. (Example: SI signal fails and the operator manually starts HPI injection.)

(2) Actions required by procedure following identification of an initiating event. (Example: Operator isolates AFW from the low-pressure SG following a steam-line break.)

*It should be noted, as stated in Chapter 1, that operator actions which are not part of the normal procedures but which could either lead to or add to the overcooling effects are not addressed by this study. It is recognized that by making this decision one category of potential overcooling events, i.e., those which are operator initiated or operator enhanced, have been eliminated.

Category 1 actions were examined on the basis of the time available for recovery and the effects of recovery. The results of this analysis were then used to adjust branch probabilities. For example, if a PZR PORV failure was isolated before SI actuation, the event would be very similar to a reactor trip event and would be created as such.

Category 2 actions were treated directly on the event tree. These operator actions were defined as being performed during some time frame following the procedural cues to perform the action.

3.4.1. Steam-Line Break at Hot 0% Power

Although the frequencies of the small and large steam-line break events at hot 0% power are different, the event-tree structures as shown in Figure 3.2 are the same.

The first heading of the event tree is "SI signal generated on demand," the direct "demand" being an initiating event that is either high steam-line differential pressure or high steam flow coincident with either low steam pressure or low T_{avg}. The high steam flow signal will close the MSIVs, while the high differential pressure signal will not. If the steam-line break is upstream of the MSIVs, the only function of the MSIVs is to isolate the break from the other steam lines. It is more likely, however, that the check valve on the ruptured steam line will perform this function. It should be noted that neither an STM PORV failure nor an SDV failure was considered for this initiating event. With the low steam-line pressures accompanying the event, these valves would not be required to function.

The next heading on the event tree, "MFW isolated on demand," comes from the main feedwater and condensate system state tree and is concerned with stopping the main feedwater flow. Among other things, the SI signal will send a signal to trip the main feedwater pumps, run back the MFW control valves,* close the MFW pump discharge valves, and prevent the MFW bypass valves from opening. A second important signal is high water level in any steam generator, which will do all of the above except close the MFW pump discharge valves. The final signal is reactor trip coincident with low T_{avg}, which only closes the MFW control valves.

The next heading, "SGs blow down," addresses the action of the main steam check valve on the ruptured line and the possible closing of the MSIVs. This branch considers whether an MSIV closure signal would be generated owing to the break and whether the MSIVs would close if the signal is given. The net system response to the break and MSIV closures is presented in terms of the number of steam generators "blowing down."

The next three headings are associated with defining auxiliary feedwater flow conditions. The first, "AFW actuates on demand," defines whether the auxiliary feedwater system is initiated. Once initiated, two potential conditions are considered under the heading "AFW flow automatically controlled": (1) flow controlled at a nominal flow rate or (2) a failure to automatically control, resulting in abnormally high flow rates (overfeed). The

*It should be noted that for hot 0% power conditions, the feedwater runback operation does not apply.

1	2	3	4	5	6	7	8	9	10
SI Signal Generated on Demand	MFW Isolated on Demand	SGs Blow Down	AFW Actuates on Demand	AFW Flow Automatically Controlled	OA: AFW Isolated to Low-Pressure SG	HPI Occurs on Demand	Charging Flow Runs Back on Demand	OA: AFW Throttled	PZR PORV Reseats on Demand
2 Branches: (1) Signal is generated. (2) Signal is not generated.	4 Branches: (1) No line overfeeds. (2) One line overfeeds. (3) Two lines overfeed. (4) All three lines overfeed.	4 Branches: (1) No SGs blow down. (2) One SG blows down. (3) Two SGs blow down. (4) All three SGs. blow down.	2 Branches: (1) AFW actuates. (2) AFW does not actuate.	2 Branches: (1) Flow controlled at nominal rate. (2) Overfeed occurs.	2 Branches: (1) Isolation occurs. (2) Isolation fails to occur.	2 Branches: (1) HPI occurs. (2) HPI fails to occur.	2 Branches: (1) Runs back as required. (2) Fails to run back.	2 Branches: (1) Operator throttles AFW flow. (2) Operator fails to throttle AFW.	2 Branches: (1) PORV reseats. (2) PORV fails to reseat.

Figure 3.2. Event tree headings for steam-line breaks at hot 0% power.

third heading, "AFW isolated to low-pressure SG," identifies whether auxiliary feedwater flow is isolated from the depressurized steam generator. It should be noted that this requires an operator action and is very important in minimizing the RCS overcooling.

The next branching, "HPI occurs on demand," addresses the initiation of SI flow as a result of an SI signal or an operator action.

Under the next heading, "Charging flow runs back on demand," control of repressurization via charging pump flow runback is addressed. Charging flow is run back automatically when the pressurizer water level is restored. Failure to run back automatically would result in challenging the PZR PORVs. Because the charging flow is controlled on pressurizer level rather than on pressure, it is conceivable that overpressurization could occur with resultant opening of the PZR PORVs. At this point, the operator can shut off the charging flow and monitor the repressurization caused by the thermal expansion of the primary system water, but because this sequence is extremely unlikely, no operator action was considered.

The second operator action of importance, included under the heading "AFW throttled," is controlling auxiliary feedwater to maintain the steam generator level. Once the broken steam line is isolated, the initial cooldown will be limited to the blowdown of the steam generator inventory. When steam generator dryout occurs, the cooldown will then be dominated by the conditions in the intact steam generators and steam lines. If the operator manually controls the auxiliary feedwater flow to maintain level, the primary system temperature will begin to increase. If, on the other hand, flow is not controlled, auxiliary feedwater overfeed will occur, which could further reduce the primary system temperature.

The two operator actions, auxiliary feedwater isolation to a depressurized steam generator and auxiliary feedwater throttling, are related. This coupling between the two actions is addressed in the event trees. If the operator fails to isolate the AFW when required, it is assumed that he will also fail to control the AFW flow.

The final tree heading, "PZR PORV reseats on demand," is required because if the repressurization is not controlled (charging flow does not run back), the high pressure is assumed to lead to a PORV lift. Thus, the potential for a PORV failure to close must be examined. This failure to close includes mechanical failures to close and the failure of the operator to block the PORVs in a short period of time.*

3.4.2. Steam-Line Break at Full Power

As shown in Figure 3.3, the event-tree headings for the steam-line break at full power are the same as those for hot 0% power except that one branch has been added for the full-power steam-line break and one has been modified. The additional branch comes from the

*The time for early isolation was assumed to be 15 minutes. If the PZR PORV is isolated within this time, the thermal-hydraulic analysis shows that the risk associated with the initial steam-line break will not be increased. In fact, failure to isolate for a few minutes may actually decrease the PTS risk associated with the initial steam-line break since the initial effect of the PZR PORV failure will be a substantial reduction of pressure.

1	2	3	4	5	6	7	8	9	10	11
SDVs Close on Demand	SI Signal Generated on Demand	MFW Run Back and Isolates on Demand	SGs Blow Down	AFW Actuates on Demand	AFW Flow Automatically Controlled	OA: AFW Isolated to Low-Pressure SG	HPI Occurs on Demand	Charging Flow Runs Back on Demand	OA: AFW Throttled	PZR PORV Reseats on Demand
4 Branches: (1) All five close. (2) One fails to close. (3) Two fail to close. (4) Three or more fail to close.	2 Branches: (1) Signal is generated. (2) Signal is not generated.	4 Branches: (1) All lines run back and MFW is isolated. (2) One line overfeeds. (3) Two lines overfeed. (4) Three lines overfeed.	4 Branches: (1) No SGs blow down. (2) One SG blows down. (3) Two SGs blow down. (4) All three SGs blow down.	2 Branches: (1) AFW actuates. (2) AFW does not actuate.	2 Branches: (1) Flow controlled at nominal rate. (2) Overfeed occurs.	2 Branches: (1) Isolation occurs. (2) Isolation fails to occur.	2 Branches: (1) HPI occurs. (2) HPI fails to occur.	2 Branches: (1) Runs back as required. (2) Fails to run back.	2 Branches: (1) Operator throttles AFW flow. (2) Operator fails to throttle AFW.	2 Branches: (1) PORV reseats. (2) PORV fails to reseat.

Note: The event tree headings for a reactor trip are the same as these except (1) the heading "STM PORVs close on demand" should precede heading 1, and heading 3 should be divided into two headings that treat MFW runback and MFW isolation separately.

Figure 3.3. Event tree headings for steam-line breaks at full power.

main steam system state tree and addresses the potential for a SDV failure to close following a small break in which a momentary T_{avg} increase occurs. The SDVs are not considered to be of importance for large breaks because no increase in T_{avg} will occur prior to MSIV closure.

The modified branch deals with the feedwater system runback and is taken from the main feedwater system state tree. (Runback was not considered for the hot 0% power case, because the valves are already closed.) All four potential branches as identified in Table 3.3 are considered as potential states.

The STM PORVs are not expected to open during the initial phases of either a large or small steam-line break. Following break isolation and steam generator blowdown (if applicable), T_{avg} may increase to the normal hot 0% power level unless plant cooldown is initiated. In this case, the STM PORVs will be required to modulate to remove decay heat. STM PORV failures in this situation have not been considered.

3.4.3. Reactor Trip

The event tree for a reactor trip initiator has the same basic structure as the event tree for a steam-line break at full power (see Figure 3.3); however, since there is no initial steam-line break, the closure of the STM PORVs, in addition to the SDVs, must be considered.

In addition, whereas MFW runback and isolation are combined in a single heading in Figure 3.3, they are treated as separate branchings in the event tree for a reactor trip because the isolation signal will not necessarily occur. Also, many of the implicit branchings used for the steam-line break will be used only in conjunction with additional failures. For example, the MSIVs will not be commanded to close following a reactor trip unless there is an additional failure, such as SDVs failing to reseat, which may eventually require closure of the MSIVs.

3.4.4. Small-Break LOCA at Full Power

Since any overcooling event of significance will involve a reactor trip, it is assumed that a LOCA event will be followed by a reactor trip. In this case, the reactor trip event-tree headings apply for the LOCA event tree with appropriate additions as shown in Figure 3.4. The additions are: turbine trip, accumulator discharge and low-pressure injection, PZR PORV reseat and LOCA isolation. In addition, main feedwater runback and main feedwater isolation have been combined into a single branch.

An SI failure condition was considered for the LOCA event tree. However, this condition can be considered as an overcooling situation only if loop flow stagnation and subsequent recovery of SI flow occur.

1	2	3	4	5	6	7	8
Turbine Trips on Demand	STM PORVs Close on Demand	SDVs Close on Demand	SI Signal Generated on Demand	MFW Runs Back and Isolates on Demand	HPI Occurs on Demand	SGs Blow Down	AFW Actuates on Demand
2 Branches: (1) Trips on demand. (2) Fails to trip.	4 Branches: (1) All three close. (2) One fails to close. (3) Two fail to close. (4) All fail to close.	4 Branches: (1) All close. (2) One fails to close. (3) Two fail to close. (4) Three or more fail to close.	2 Branches: (1) Signal is generated. (2) Signal is not generated.	4 Branches: (1) All lines run back and MFW is isolated. (2) One line overfeeds. (3) Two lines overfeed. (4) Three lines overfeed.	2 Branches: (1) HPI occurs. (2) HPI fails to occur.	4 Branches: (1) No SGs blow down. (2) One SG blow-down. (3) Two SGs blow down (4) All three SGs blow down.	2 Branches: (1) AFW actuates. (2) AFW does not actuate.

9	10	11	12	13	14	15
AFW Flow Automatically Controlled	OA: AFW Isolated to Low-Pressure SG	Accumulators Discharge	OA: Break Not Isolated	Charging Flow Runs Back on Demand	OA: AFW Throttled	LPI Occurs on Demand
2 Branches: (1) Flow controlled at nominal rate. (2) Overfeed occurs.	2 Branches: (1) Isolation occurs. (2) Isolation fails to occur.	2 Branches: (1) Accumulators discharge when required. (2) Accumulators fail to discharge.	2 Branches: (1) Operator fails to isolate break. (2) Operator isolates break.	2 Branches: (1) Runs back as required. 2) Fails to run back.	2 Branches: (1) Operator throttles AFW flow. (2) Operator fails to throttle AFW flow.	2 Branches: (1) LPI occurs as required. (2) LPI fails to occur.

Note: The event tree headings for other LOCAs are similar to these except for the following: (1) For medium-break LOCA at full power, delete headings 12 and 13. (2) For small-break LOCA at hot 0% power, delete headings 1, 2, 3, 7, and 10 and modify heading 5 to read "MFW isolated on demand." (3) For medium-break LOCA at hot 0% power, delete headings 1, 2, 3, 10, 12, and 14 and modify heading 5 to read "MFW isolated on demand."

Figure 3.4. Event tree headings for small-break LOCAs at full power.

3.4.5. Medium-Break LOCA at Full Power

The event tree for a medium-break LOCA at full power is identical to that for the small-break LOCA at full power except that the branches "Break not isolated" (No. 12) and "Charging flow runs back on demand" (No. 13) are deleted. Because the break cannot be isolated, control of charging flow is irrelevant.

3.4.6. Small-Break LOCA at Hot 0% Power

The event tree for a small-break LOCA at hot 0% power was constructed from the event tree for a small-break LOCA at full power by deleting the headings "Turbine trips on demand" (No. 1), "STM PORVs close on demand" (No. 2), "SDVs close on demand" (No. 3), "SGs blow down" (No. 7), and "AFW isolated to low-pressure SG" (No. 10). In addition heading No. 5 should be modified to read "MFW isolated on demand." (MFW runback does not apply at hot 0% power, but MFW isolation is considered.)

3.4.7. Medium-Break LOCA at Hot 0% Power

The event tree for a medium-break LOCA at hot 0% power was obtained by deleting two branches from the tree for a small-break LOCA at hot 0% power: "Break not isolated" and "Charging flow runs back on demand" (Nos. 12 and 14 in Figure 3.4). The resulting event-tree headings are summarized in the Section 3.5.

3.4.8. Tube Rupture

The tube rupture event tree was developed based on a review of tube rupture procedures. It is composed of five branches:

(1) Steam Dumps Close on Demand — This branch is required to examine the potential combination of a tube rupture and a small steam-line break.

(2) OA: Number of Pressurizer PORV Lifts Performed — The Emergency Operating Procedures require the operator to use the pressurizer PORV to lower the primary system pressure. This adds an additional cooling effect to the system. The question arises as to whether the initial PORV lift is enough to keep the pressure at a lower level. There is at least some argument that a second manual opening of the PORV would be performed at some delayed time following the initial opening. This branch identifies whether one or two PORV openings are performed.

(3) PORV Reseat — Each time a PORV is opened, the potential for failure of the PORV to close must be examined. This branch determines whether closure is effected.

(4) OA: Close Block Valve — Each time a PORV fails to close, the potential for operator isolation of the valve via the block valve must be examined. This branch determines whether the operator performs the action.

(5) OA: Terminate SI — This final branch addresses whether or not the operator terminates SI. Failure to terminate SI will lead to a continuous feed and bleed situation where HPI feeds cold water into the system and warmer water flows from the primary to the secondary system.

3.4.9. Loss of Main Feedwater

The loss of main feedwater event was also considered to be a potential overcooling initiating event because auxiliary feedwater flow will occur. The effects of auxiliary flow and potential overfeed associated with other events such as steam-line breaks, LOCAs, etc. are addressed by the event trees defined in the previous sections. However, the loss of main feedwater followed by auxiliary feedwater flow and potential auxiliary feedwater overfeed has not been addressed. Since there are only a limited number of these cases, no event tree was developed for the case of main feedwater loss. Instead, each sequence is simply defined and quantified.

3.5. Event-Tree Quantification and Collapse

In this section probabilities are assigned to each of the branches of the event trees identified in Section 3.4 and the probabilities are then combined with the frequencies of the corresponding initiating events identified in Section 3.3 to determine the frequency of each possible sequence on each event tree. The resulting frequencies are then screened and collapsed to determine which event-tree sequences are important enough to undergo subsequent thermal-hydraulic and fracture-mechanics analyses. In addition, the importance of support system failures with respect to PTS events are examined and sequences initiated by such failures are selected for further analysis.

In determining the branch probabilities, the complete Licensee Event Report (LER) data base for H. B. Robinson Unit 2 was reviewed for initiating events and system failures, as well as for a general overview of the performance of plant systems of interest. Although the H. B. Robinson data base did reflect some failures and unavailability of components, it did not reflect a significant number of failures on demand for the systems of interest. Therefore, in lieu of relying solely on H. B. Robinson information, Westinghouse-specific and PWR-specific operational information was employed for the target event when available and when the H. B. Robinson operational experience did not provide an adequate data base for that event. Additional information was obtained from the national Reliability Evaluation Program Generic Data Base, the Nuclear Power Plant Operating Experience Summaries, and, when practical, from other sources. With the constraints imposed by programmatic needs and the availability of operational data, only simplified approaches to frequency and probability estimation were permitted, but these estimates were considered to be acceptable for use as screening estimates. The estimates developed, the rationale used, relevant information, and information sources are presented in Appendix B.

A somewhat simplified approach was used to quantify the failure rates for expected operator actions. The basis for this approach was a hierarchical structure of performance shaping factors that was developed as part of the current program and has since been labeled the STAHR approach* (see Appendix C). The structure used in the STAHR approach allowed the human error rate for a particular target event to be calculated from a network

*This type of methodology was used due to a lack of resources, including the lack of task analysis information. Although the approach appears to have been successful for this application, the use of this methodology cannot be condoned for a more generic usage at this time. Even though the basic structure of the approach has merit, a more basic scientific analysis is necessary to perfect a usable methodology.

of related assessments by individuals who had some operational experience or had been involved in human reliability analyses on nuclear power plant transient analyses. Some error rates were conditional probabilities, while others reflected the weight of evidence concerning influences operating at this particular nuclear power station. Generally, influencing events were organized to reflect the potential effects of the operator's physical and social environment, as well as personal factors. Interactions among these factors were also modeled. Once operator failure rates were quantified, dependence or coupling factors taken from NUREG/CR-1278 were used to adjust the operator action failure probabilities. These final probabilities were then applied to the event-tree branchings as necessary. The development of these probabilities is discussed in Appendix D.

After the frequencies for all the sequences for each initiating event were obtained, a frequency of 10^{-7}/yr or greater was used as a screening criterion to identify those sequences which should undergo thermal-hydraulic and fracture-mechanics analyses on an individual basis. The remaining sequences were combined into a set of "residual" groups. These groups were then further examined to identify sequences that were similar enough to sequences above the 10^{-7} screening level that their consequences were bounded by the respective higher frequency sequences. Sequences falling into this category were removed from the residual group and their frequencies added in with those of the appropriate bounding sequences. The residual groups were also examined for additional sequences that should be specifically evaluated because the combination of their frequency and potential consequences identified them as being potentially important. These were removed from the residual group and treated separately.

The basis for bounding residual consequences by other existing sequences is tied to thermal-hydraulic and system state considerations. In general, sequences were bounded under the following conditions. Sequences which involved the failure of the AFW to actuate and with no subsequent recovery were considered bounded by sequences involving successful operation of AFW. Sequences involving failure of the SI signal to generate were considered bounded by failure of the HPI to occur on demand, since HPI would not occur without an SI signal. For LOCA initiators at power, all sequences involving failure of the SI signal or HPI were grouped with the top sequence involving failure of HPI to occur on demand, regardless of the events occurring on the secondary side, since the RCS could not be repressurized without HPI. For steam-line break initiators, sequences with HPI failure were considered of less consequence from a repressurization and overcooling standpoint than their counterpart sequences with HPI success and were therefore bounded. Likewise, failure of LPI is of less consequence to PTS than successful LPI. On the reactor trip tree, sequences with MFW isolation failure but with runback success were considered to be similar to sequences with AFW overfeed. Likewise, sequences with SI signal failure were considered to be similar to AFW overfeed sequences because MFW isolation would not occur immediately without an SI signal. AFW overfeed sequences were also considered to be similar to sequences with one MFW line failing to run back.

For each event tree discussed below, three items are presented: a table summarizing the branch headings and describing the branch probabilities used; the event tree; and a table describing the sequences identified for thermal-hydraulic and fracture-mechanics analyses. Sequence numbers and associated sequences provided in the tables are consistent with

those included in the INEL analysis* and not necessarily consistent with the order of presentation of the tables. Sequences that have been combined with other sequences are indicated on the far right side of the event trees.

It will be noted that event trees per se are not included for tube rupture events or loss-of-feedwater (LOFW) events. However, potentially important sequences for these events are identified and quantified. In addition, as noted earlier, sequences from the support system failures that were identified as potential PTS sequence initiators are quantified.

3.5.1. Reactor Trip

The frequency for a reactor trip as an initiating event is 8.7/yr (see development of initiating frequencies in Appendix B). This frequency combined with the branch tree probabilities given in Table 3.6 resulted in a total of 9773 sequences. Of this number, 112 had a frequency of 10^{-7}/yr or higher. The remaining 9661 residual sequences had a combined frequency of 3.63×10^{-6}/yr. The 112 sequences and the residual sequences are all shown in Figure 3.5.

The 112 sequences with a frequency of 10^{-7} or higher were investigated to determine whether selected sequences could be combined. Where it was found that the thermal-hydraulic RCS response of a sequence was similiar to and bounded by that of another, the sequences were combined. The frequency of the bounding sequence was calculated as the sum of the constituent sequences. This process reduced the number of specific reactor trip sequences from 112 to 95.

At about this time it was realized that a very important operator action was missing from the analysis. It had initially been assumed that when SDVs failed, the MSIVs would automatically close, thereby isolating the SDV failures (except, of course, in the case where the MSIVs malfunction and fail to close). However, the initial thermal-hydraulic analysis revealed that conditions necessary for automatic MSIV closure would not exist. Thus, as stated in the procedures, the operator would be required to close the MSIVs. Some delay is anticipated since it was felt that once diagnosed there would be some attempt at closing the SDVs manually before isolating the system by closing the MSIVs. Thus the time of closure was chosen to be 30 minutes after reactor trip. This led to two sequences for each case involving a failure of SDV(s) to close: (1) SDV(s) fail and operator closes MSIV(s) at 30 minutes, and (2) SDV(s) fail and operator fails to close MSIV(s) in the two-hour time frame. The success and failure probabilities associated with this operator action were perceived to vary with conditions. (These probabilities are discussed in Appendix D.) The two sequences are designated "A" and "B" respectively.

The use of the "A" and "B" designation increased the number of reactor trip sequences to be analyzed from 95 to 110 (see Table 3.7). The bounding process performed on the residual sequences reduced the total frequency of the residual group to 2.7×10^{-6}/yr.

*C. D. Fletcher *et al.*, *Thermal-Hydraulic Analyses of Overcooling Sequences for the H. B. Robinson Unit 2 Pressurized Thermal Shock Study,* NUREG/CR-3935 (EGG-2335), Idaho National Engineering Laboratory, May 1985.

The remaining residual sequences were very diverse with respect to consequences; therefore, they were divided into four different groups based on the nature of the event. The four residual classes can be characterized as:

(1) Equivalent to small-break LOCA (PZR PORV failed open).

(2) Equivalent to a small-break LOCA coupled with a small steam-line break (PZR PORV and SDV or STM PORV failed open).

(3) Equivalent to a small steam-line break with unisolated main or auxiliary feedwater flow.

(4) Equivalent to a small steam-line break with full RCS repressurization (unthrottled charging flow).

The frequencies of each of these residual groups, calculated as the sum of the constituent sequence frequencies, are included in Table 3.7.

3.5.2. Large Steam-Line Break at Hot 0% Power

In Appendix B, the frequency for a large steam-line break as an initiator is given as 1.2×10^{-3}/yr. This frequency covers both full power and hot 0% power conditions. The fraction of operating time spent at hot 0% power (1.9%) was considered as a weighting factor for determining the frequency of occurrence at hot 0% power. With this weighting factor, the initiator frequency for this category was defined as $(1.2 \times 10^{-3}/\text{yr}) \times 0.019 = 2.28 \times 10^{-5}$/yr.

Combining the initiating frequency with the branch heading probabilities given in Table 3.8 produced a total of 508 sequences. Of these, nine sequences, three of which are residual groups, were identified for analyses. The event tree for this initiator is shown in Figure 3.6, and the sequences are listed in Table 3.9. The bounding process did not reduce the residual group frequency significantly.

The frequency associated with the residual group totaled approximately 2.3×10^{-7}/yr. This total residual is indicative of the importance (or lack thereof) of the sequences which were not selected for thermal-hydraulic and fracture-mechanics analyses.

3.5.3. Small Steam-Line Break at Hot 0% Power

Historically, small steam-line breaks have involved single and multiple open valves. The initiating frequency given in Appendix B for small steam-line breaks independent of the reactor state is 2.0×10^{-2}/yr. At hot 0% power and during initial power increase, there is a constant need to match feed flow and steam flow. This transient condition was believed to increase the potential for a small break. The effect of this transient condition is demonstrated by the fact that ~25% of the observed scrams occurred during startup.

Table 3.6. Branch probabilities for a reactor trip[a]

Tree Heading	Branch	Branch Probability
STM PORVs close on demand.	(1) All three STM PORVs close.	0.97981
	(2) One STM PORV fails to close.	1.8×10^{-2}
	(3) Two STM PORVs fail to close.	1.7×10^{-3}
	(4) All three STM PORVs fail to close.	4.9×10^{-4}
SDVs close on demand.	(1) All five SDVs close.	0.99768
	(2) One SDV fails to close.	1.6×10^{-3}
	(3) Two SDVs fail to close.	3.0×10^{-4}
	(4) Three or more SDVs fail to close.	4.2×10^{-4}
MFW runs back.	(1) All three lines run back.	0.9999940
	(2) One line fails to run back.[b]	5.3×10^{-6}
	(3) Two lines fail to run back.[b]	5.0×10^{-7}
	(4) All three lines fail to run back.[b]	1.4×10^{-7}
SI signal generated on demand.	(1) SI signal is generated.	0.99997
	(2) SI signal is not generated.	3×10^{-5}
MFW isolated on demand.	If all lines run back,	
	(1) no line overfeeds.	1.0
	If one line fails to run back,	
	(1) No line overfeeds.	0.99
	(2) One line overfeeds.	1×10^{-2}
	If two lines fail to run back,	
	(1) No line overfeeds.	0.97906
	(2) One line overfeeds.	2.0×10^{-2}
	(3) Two lines overfeed.	9.4×10^{-4}
	If three lines fail to run back,	
	(1) No line overfeeds.	0.96639
	(2) One line overfeeds.	3.0×10^{-2}
	(3) Two lines overfeed.	2.8×10^{-3}
	(4) All three lines overfeed.	8.1×10^{-4}
SGs blow down.	If one or two SDVs fail,	
	(1) All three SGs blow down.	1.0[c]
	If three or more SDVs fail,	
	(1) No SGs blow down.	0.99087[d]
	(2) One SG blows down.	6.6×10^{-3}[d]
	(3) Two SGs blow down.	2.0×10^{-3}[d]
	(4) All three SGs blow down.	5.3×10^{-4}[d]
	If one, two, or three STM PORVs fail, then, respectively,	
	(1) One SG blows down.	1.0
	(2) Two SGs blow down.	1.0
	(3) Three SGs blow down.	1.0
	If MSIV closure signal is not generated,	
	(1) All three SGs blow down.	1.0
AFW actuates on demand.	(1) AFW actuates.	0.999
	(2) AFW does not actuate.	1×10^{-3}
AFW flow automatically controlled.	(1) AFW flow is automatically controlled at nominal rate.	0.9925
	(2) Flow control failure leads to abnormally high AFW flow rate (overfeeds).	7.5×10^{-3}

Table 3.6 (Continued)

Tree Heading	Branch	Branch Probability
OA: AFW isolated to low-pressure SG.	(1) AFW isolation occurs.	0.9983
	(2) AFW isolation fails to occur.	1.7×10^{-3}
HPI occurs on demand.	If SI signal is generated,	
	(1) HPI occurs.	0.99939
	(2) HPI fails to occur.	6.1×10^{-4}
	If SI signal is not generated,	
	(1) Operator manually starts HPI.	0.99
	(2) Operator fails to start HPI.	1×10^{-2}
Charging flow runs back on demand.	(1) Charging flow runs back, as required (repressurization limited).	0.99
	(2) Charging flow fails to run back (repressurization not limited).	1×10^{-2}
OA: AFW throttled.	If operator isolates AFW,	
	(1) Operator throttles AFW flow.	0.99
	(2) Operator fails to throttle AFW flow.	1×10^{-2}
	If operator fails to isolate AFW,	
	(1) Operator fails to throttle AFW flow.	1.0
	(2) Operator throttles AFW flow.	0.0
PZR PORV reseats on on demand.	(1) PZR PORV reseats if charging flow fails to run back.	0.9988
	(2) PZR PORV fails to reseat if charging flow fails to run back.	1.2×10^{-3}

[a]The acronyms used in this table (in the order of their appearance) are: STM PORV = steam power-operated relief valve, SDV = steam dump valve, MFW = main feedwater, SI = safety injection, SG = steam generator, MSIV = main steam isolation valve, AFW = auxiliary feedwater, OA = operator action, HPI = high-pressure injection, and PZR PORV = pressurizer power-operated relief valve.

[b]Includes failure of MFW regulating valves to run back and failure of one or both MFW pumps to trip to high level in any steam generator.

[c]Only one branch is carried for either one or two SDVs. In the case of the failure of one SDV, it was felt that the operator would be very reluctant to close the MSIVs for this amount of excess steam flow and probably would allow the system to cool down as the transient defines. Thus all three SGs would blow down slowly. For two SDV failures, it is assumed that the operator still would be reluctant to isolate the SGs, but more than likely he would close the MSIVs within 30 minutes. But, since the operator action failure probability used for this case (1×10^{-2}) is higher than the valve for failure of the MSIVs to close on demand, the MSIV failure branches are not considered. Thus, with respect to the event trees, two SDV failures are presented as all three SGs blow down since closure of the MSIVs by the operator is considered separate from the event tree.

[d]The probabilities presented here represent blowdown due to MISV failure to close. It is anticipated that there will be times when a steam-line valve or pipe failure would not produce enough steam flow to cause automatic closure of the MSIVs. In this case, the operator would be required to manually close these valves. Failure to close the valves would result in the blowdown of all three steam generators. When applicable, "A" and "B" sequences are identified to designate whether or not the operator closes the valves. Probabilities associated with failure of the operator to close the valves vary with the circumstances and are discussed in Appendix D.

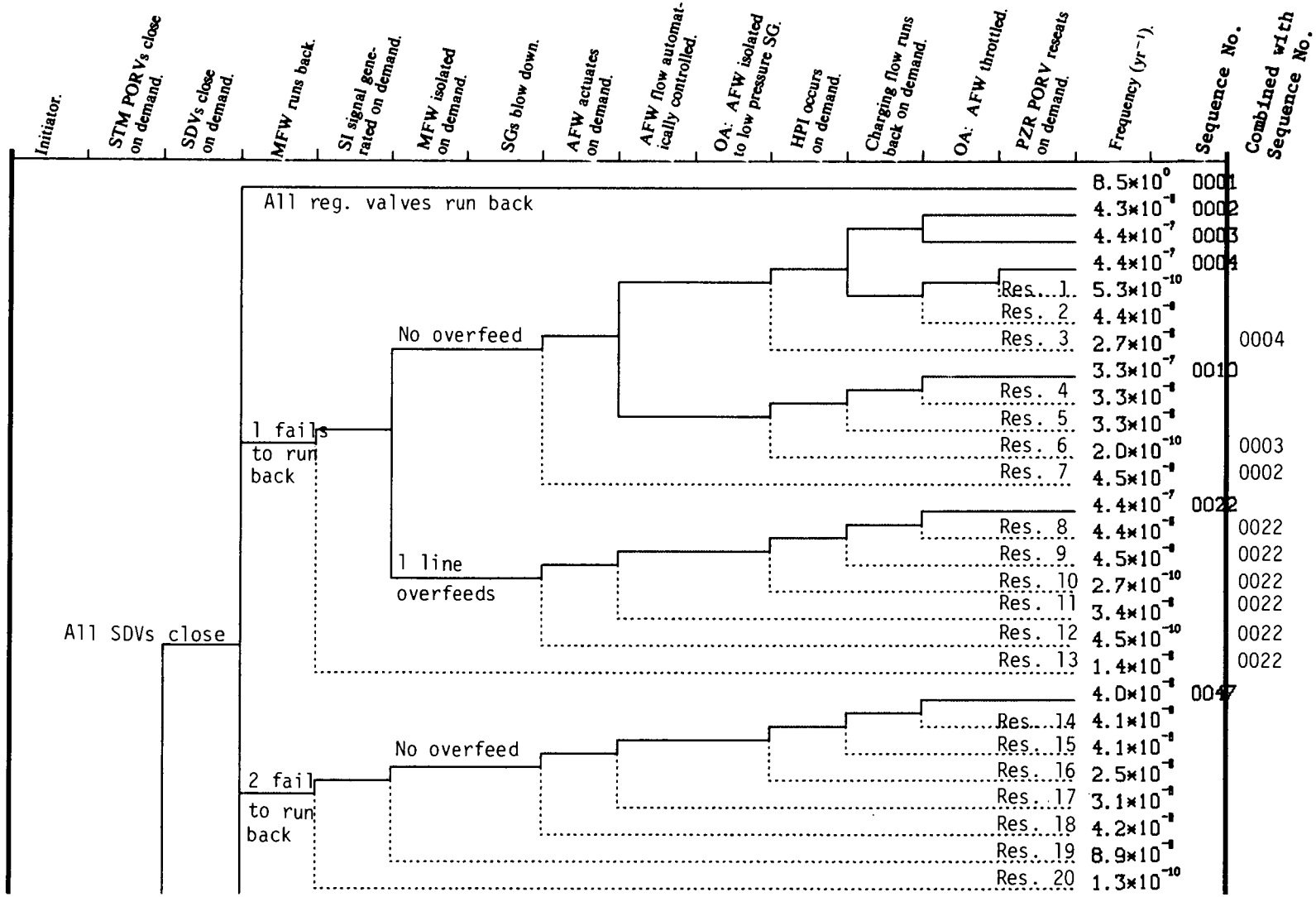
Initiator.
STM PORVs close on demand.
SDVs close on demand.
MFW runs back.
SI signal generated on demand.
MFW isolated on demand.
SGs blow down.
AFW actuates on demand.
AFW flow automatically controlled.
OA: AFW isolated to low pressure SG.
HPI occurs on demand.
Charging flow runs back on demand.
OA: AFW throttled.
PZR PORV reseats on demand.
Frequency (yr⁻¹).
Sequence No.
Combined with Sequence No.
All SDVs close
All reg. valves run back
1 fails to run back
No overfeed
1 line overfeeds
2 fail to run back
No overfeed
Res. 1
Res. 2
Res. 3
Res. 4
Res. 5
Res. 6
Res. 7
Res. 8
Res. 9
Res. 10
Res. 11
Res. 12
Res. 13
Res. 14
Res. 15
Res. 16
Res. 17
Res. 18
Res. 19
Res. 20
8.5×10^0 0001
4.3×10^-8 0002
4.4×10^-7 0003
4.4×10^-7 0004
5.3×10^-10
4.4×10^-8
2.7×10^-8 0004
3.3×10^-7 0010
3.3×10^-8
3.3×10^-8
2.0×10^-10 0003
4.5×10^-8 0002
4.4×10^-7 0022
4.4×10^-8 0022
4.5×10^-8 0022
2.7×10^-10 0022
3.4×10^-8 0022
4.5×10^-10 0022
1.4×10^-8 0022
4.0×10^-8 0047
4.1×10^-8
4.1×10^-8
2.5×10^-8
3.1×10^-8
4.2×10^-8
8.9×10^-8
1.3×10^-10

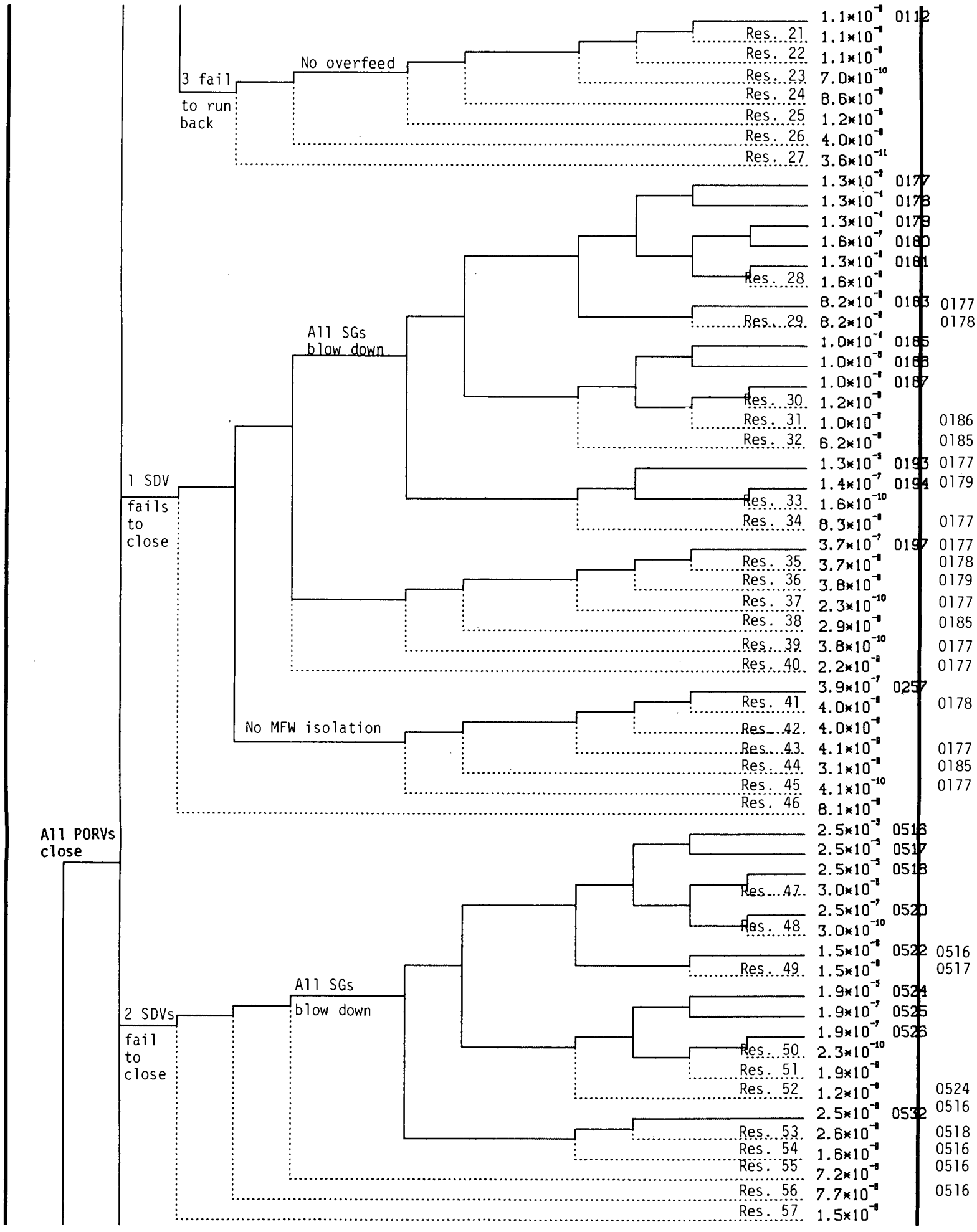

Figure 3.5. Event tree for a reactor trip.

(continued on next page)

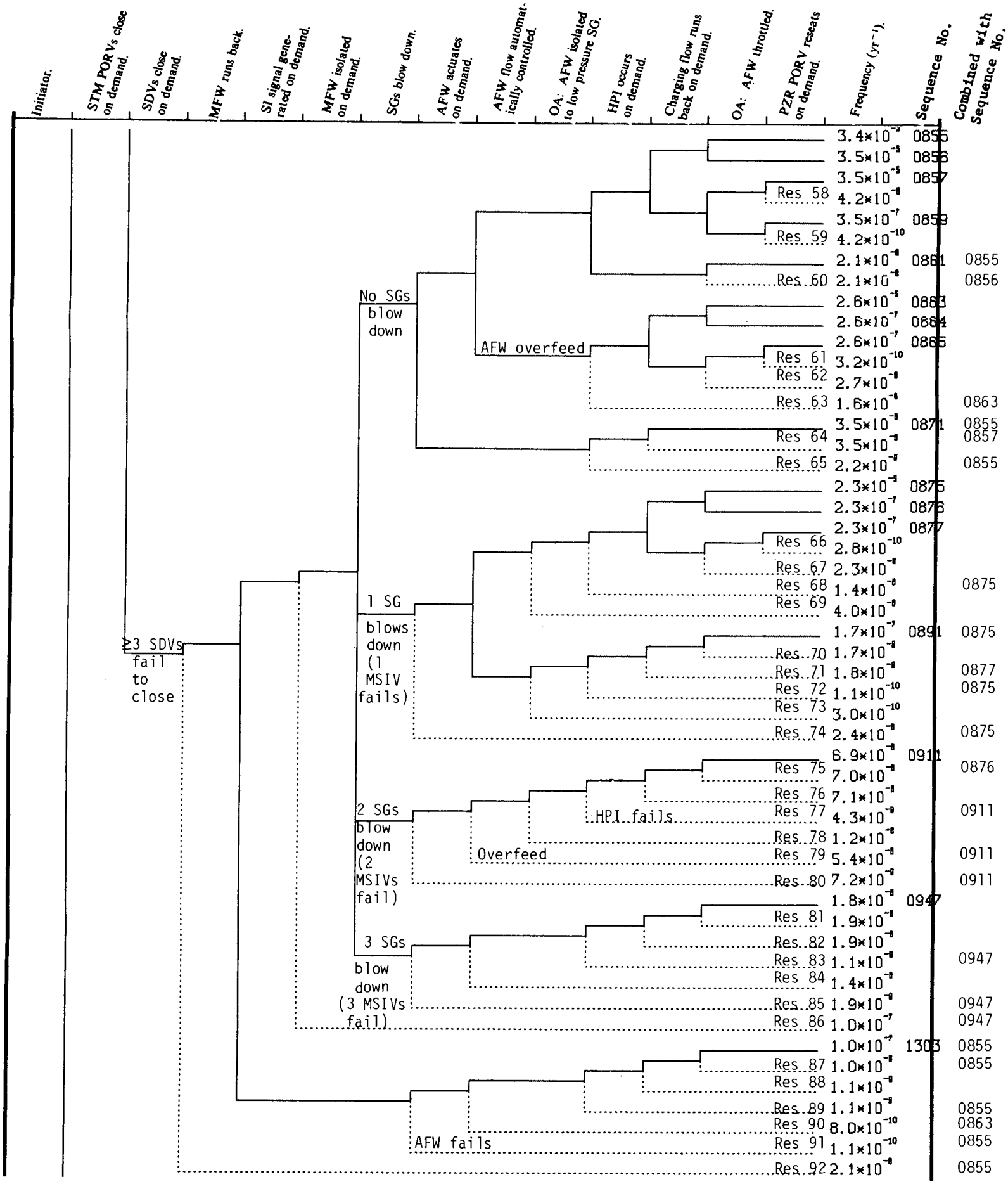
Initiator.
STM PORVs close on demand.
SDVs close on demand.
MFW runs back.
SI signal generated on demand.
MFW isolated on demand.
SGs blow down.
AFW actuates on demand.
AFW flow automatically controlled.
OA: AFW isolated to low pressure SG.
HPI occurs on demand.
Charging flow runs back on demand.
OA: AFW throttled.
PZR PORV reseats on demand.
Frequency (yr⁻¹).
Sequence No.
Combined with Sequence No.
≥3 SDVs fail to close
No SGs blow down
AFW overfeed
1 SG blows down (1 MSIV fails)
2 SGs blow down (2 MSIVs fail)
HPI fails
Overfeed
3 SGs blow down (3 MSIVs fail)
AFW fails
Res 58 4.2×10⁻⁸
Res 59 4.2×10⁻¹⁰
Res 60 2.1×10⁻⁸
Res 61 3.2×10⁻¹⁰
Res 62 2.7×10⁻⁸
Res 63 1.6×10⁻⁸
Res 64 3.5×10⁻⁸
Res 65 2.2×10⁻⁸
Res 66 2.8×10⁻¹⁰
Res 67 2.3×10⁻⁸
Res 68 1.4×10⁻⁸
Res 69 4.0×10⁻⁸
Res 70 1.7×10⁻⁸
Res 71 1.8×10⁻⁸
Res 72 1.1×10⁻¹⁰
Res 73 3.0×10⁻¹⁰
Res 74 2.4×10⁻⁸
Res 75 7.0×10⁻⁸
Res 76 7.1×10⁻⁸
Res 77 4.3×10⁻⁹
Res 78 1.2×10⁻⁸
Res 79 5.4×10⁻⁸
Res 80 7.2×10⁻⁹
Res 81 1.9×10⁻⁸
Res 82 1.9×10⁻⁸
Res 83 1.1×10⁻⁹
Res 84 1.4×10⁻⁸
Res 85 1.9×10⁻⁹
Res 86 1.0×10⁻⁷
Res 87 1.0×10⁻⁸
Res 88 1.1×10⁻⁹
Res 89 1.1×10⁻⁹
Res 90 8.0×10⁻¹⁰
Res 91 1.1×10⁻¹⁰
Res 92 2.1×10⁻⁸
3.4×10⁻⁷ 0855
3.5×10⁻⁵ 0856
3.5×10⁻⁵ 0857
3.5×10⁻⁷ 0859
2.1×10⁻⁸ 0861 0855
0856
2.6×10⁻⁵ 0863
2.6×10⁻⁷ 0864
2.6×10⁻⁷ 0865
0863
3.5×10⁻⁸ 0871 0855
0857
0855
2.3×10⁻⁵ 0875
2.3×10⁻⁷ 0876
2.3×10⁻⁷ 0877
0875
1.7×10⁻⁷ 0891 0875
0877
0875
0875
6.9×10⁻⁸ 0911
0876
0911
0911
1.8×10⁻⁸ 0947
0947
0947
0947
1.0×10⁻⁷ 1303 0855
0855
0855
0863
0855
0855

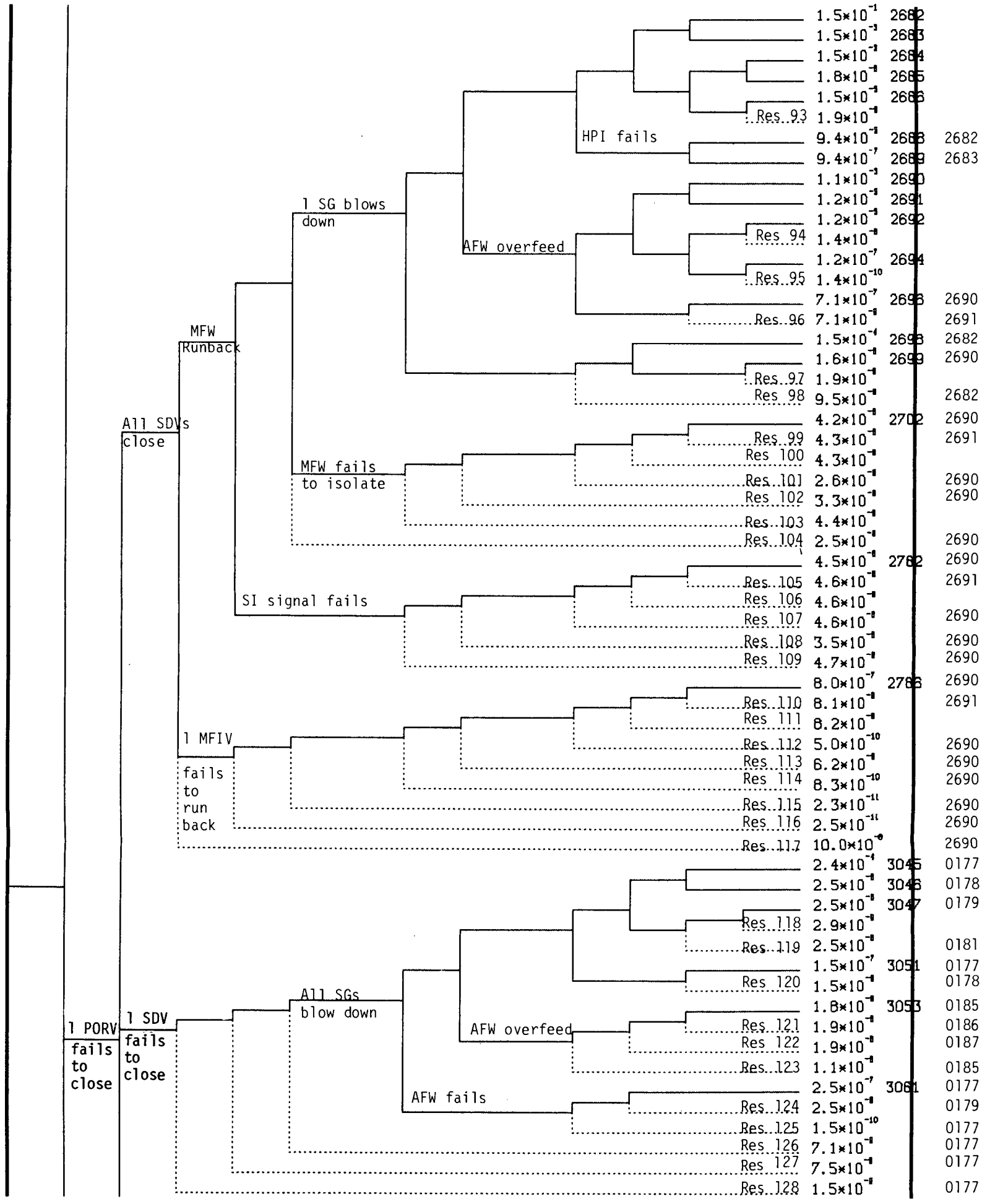

Figure 3.5. (Continued on next page)

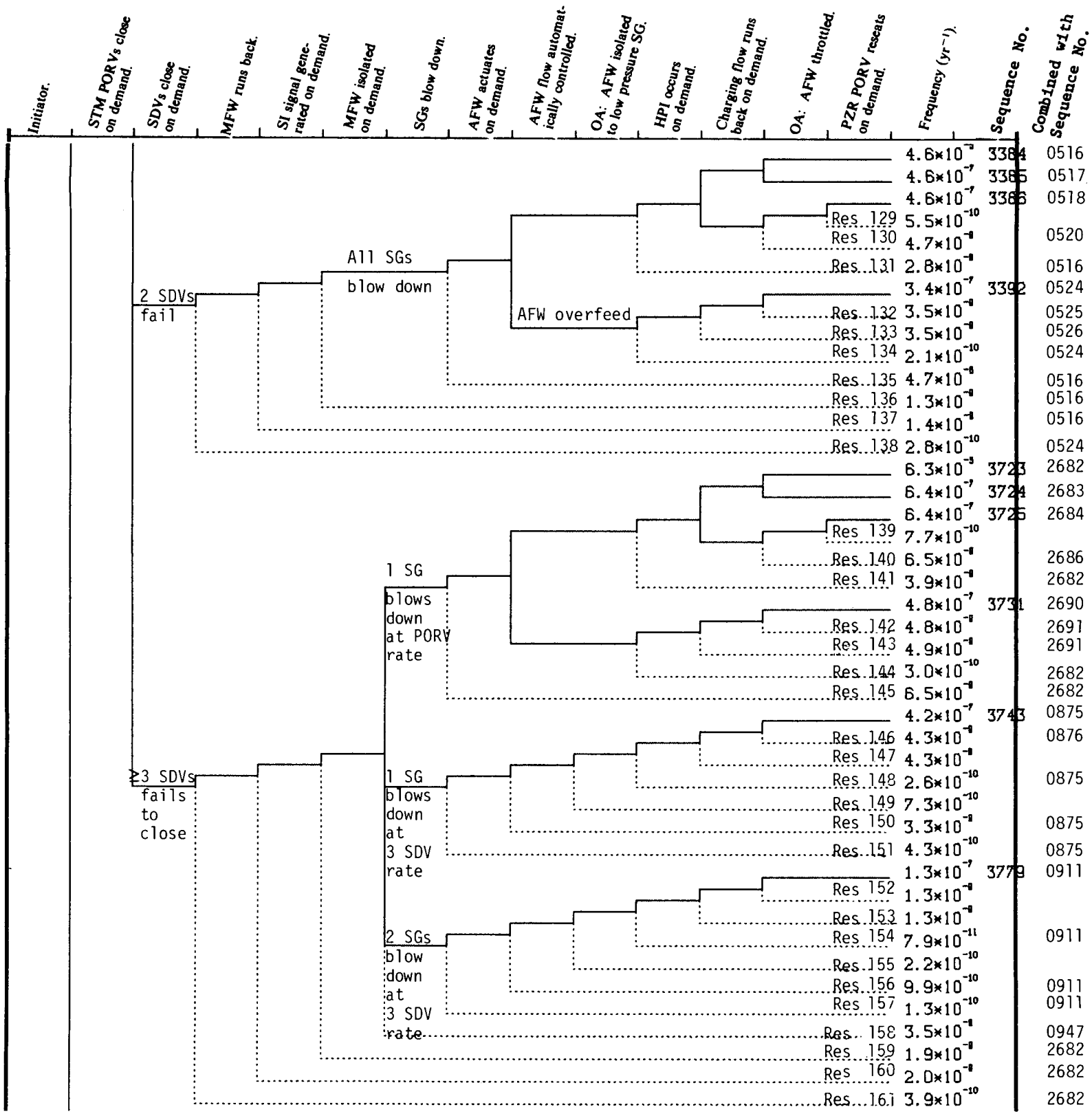
Initiator.
STM PORVs close on demand.
SDVs close on demand.
MFW runs back.
SI signal generated on demand.
MFW isolated on demand.
SGs blow down.
AFW actuates on demand.
AFW flow automatically controlled.
OA: AFW isolated to low pressure SG.
HPI occurs on demand.
Charging flow runs back on demand.
OA: AFW throttled.
PZR PORV reseats on demand.
Frequency (yr⁻¹).
Sequence No.
Combined with Sequence No.
2 SDVs fail
All SGs blow down
AFW overfeed
≥3 SDVs fails to close
1 SG blows down at PORV rate
1 SG blows down at 3 SDV rate
2 SGs blow down at 3 SDV rate
4.6×10⁻⁷ 3384 0516
4.6×10⁻⁷ 3385 0517
4.6×10⁻⁷ 3386 0518
Res 129 5.5×10⁻¹⁰
Res 130 4.7×10⁻⁸ 0520
Res 131 2.8×10⁻⁸ 0516
3.4×10⁻⁷ 3392 0524
Res 132 3.5×10⁻⁸ 0525
Res 133 3.5×10⁻⁸ 0526
Res 134 2.1×10⁻¹⁰ 0524
Res 135 4.7×10⁻⁸ 0516
Res 136 1.3×10⁻⁸ 0516
Res 137 1.4×10⁻⁸ 0516
Res 138 2.8×10⁻¹⁰ 0524
6.3×10⁻⁵ 3723 2682
6.4×10⁻⁷ 3724 2683
6.4×10⁻⁷ 3725 2684
Res 139 7.7×10⁻¹⁰
Res 140 6.5×10⁻⁸ 2686
Res 141 3.9×10⁻⁸ 2682
4.8×10⁻⁷ 3731 2690
Res 142 4.8×10⁻⁸ 2691
Res 143 4.9×10⁻⁸ 2691
Res 144 3.0×10⁻¹⁰ 2682
Res 145 6.5×10⁻⁸ 2682
4.2×10⁻⁷ 3743 0875
Res 146 4.3×10⁻⁸ 0876
Res 147 4.3×10⁻⁸
Res 148 2.6×10⁻¹⁰ 0875
Res 149 7.3×10⁻¹⁰
Res 150 3.3×10⁻⁸ 0875
Res 151 4.3×10⁻¹⁰ 0875
1.3×10⁻⁷ 3779 0911
Res 152 1.3×10⁻⁸
Res 153 1.3×10⁻⁸
Res 154 7.9×10⁻¹¹ 0911
Res 155 2.2×10⁻¹⁰
Res 156 9.9×10⁻¹⁰ 0911
Res 157 1.3×10⁻¹⁰ 0911
Res 158 3.5×10⁻⁸ 0947
Res 159 1.9×10⁻⁸ 2682
Res 160 2.0×10⁻⁸ 2682
Res 161 3.9×10⁻¹⁰ 2682

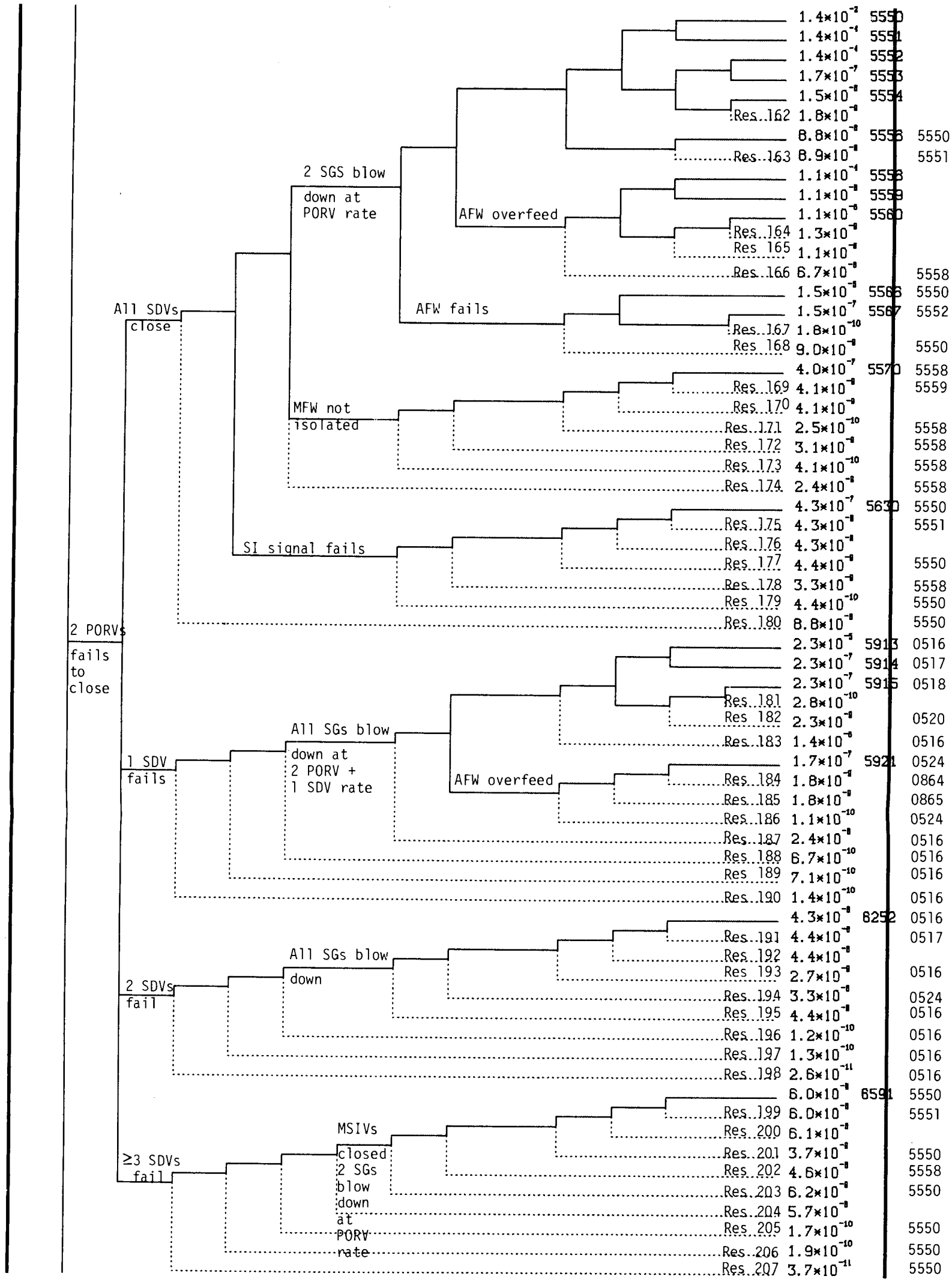

Figure 3.5. (Continued on next page)

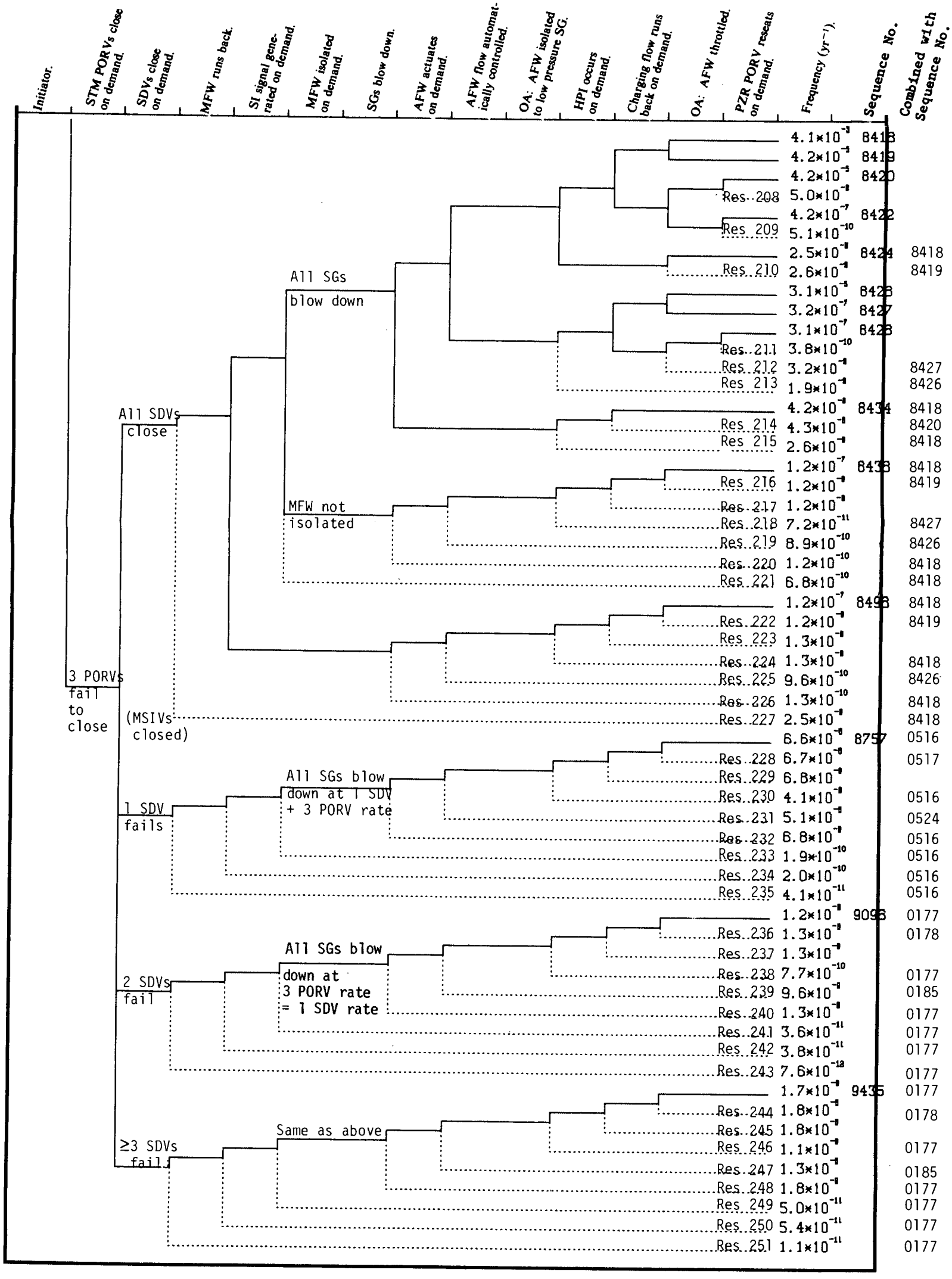

Figure 3.5. (Continued)

Table 3.7. Sequences to be analyzed for reactor trip at full power[a]

Sequence No.[b]	STM PORVs Close on Demand	SDVs Close on Demand	MFW Runs Back	MFW Isolates on Demand	SGs Blow Down	AFW Flow Automatically Controlled	OA: AFW Isolated to LP SG	Charging Flow Runs Back	OA: AFW Throttled	Frequency (yr^{-1})
9.1 (0001)	All close	All close	All lines run back	NA	NA	NA	NA	NA	NA	8.5
9.2 (0177)	All close	One fails to close	All lines run back	No line overfeeds	All SGs blow down	Automatically controlled	NA	Runs back as required	Throttles prior to SG high-level alarm	1.3E−2
9.3 (0178)	All close	One fails to close	All lines run back	No line overfeeds	All SGs blow down	Automatically controlled	NA	Runs back as required	Fails to throttle	1.3E−4
9.4 (0179)	All close	One fails to close	All lines run back	No line overfeeds	All SGs blow down	Automatically controlled	NA	Fails to run back	Throttles prior to SG high-level alarm	1.4E−4
9.5 (0181)	All close	One fails to close	All lines run back	No line overfeeds	All SGs blow down	Automatically controlled	NA	Fails to run back	Fails to throttle	1.3E−6
9.6 (0185)	All close	One fails to close	All lines run back	No line overfeeds	All SGs blow down	Overfeeds	NA	Runs back as required	Throttles prior to SG alarm	1.0E−4
9.7 (0186)	All close	One fails to close	All lines run back	No line overfeeds	All SGs blow down	Overfeeds	NA	Runs back run back	Fails to throttle	1.0E−6
9.8 (0187)	All close	One fails to close	All lines run back	No line overfeeds	All SGs blow down	Overfeeds	NA	Fails to run back	Throttles prior to SG high-level larm	1.0E−6
9.9A (0516)	All close	Two fail to close	All lines run back	No line overfeeds	All SGs blow down for 30 min	Automatically controlled	NA	Runs back as required	Throttles prior to SG high-level alarm	2.7E−3
9.9B (0516)	All close	Two fail to close	All lines run back	No line overfeeds	All SGs blow down	Automatically controlled	NA	Runs back as required	Throttles prior to SG high-level alarm	2.7E−5
9.10A (0517)	All close	Two fail to close	All lines run back	No line overfeeds	All SGs blow down for 30 min	Automatically controlled	NA	Runs back as required	Fails to throttle	2.8E−5
9.10B (0517)	All close	Two fail to close	All lines run back	No line overfeeds	All SGs blow down	Automatically controlled	NA	Runs back as required	Fails to throttle	4.2E−6

Table 3.7 (Continued)

Sequence No.[b]	STM PORVs Close on Demand	SDVs Close on Demand	MFW Runs Back	MFW Isolates on Demand	SGs Blow Down	AFW Flow Automatically Controlled	OA: AFW Isolated to LP SG	Charging Flow Runs Back	OA: AFW Throttled	Frequency (yr^{-1})
9.11A (0518)	All close	Two fail to close	All lines run back	No line overfeeds	All SGs blow down for 30 min	Automatically controlled	NA	Fails to run back	Throttles prior to SG high-level alarm	2.8E−5
9.11B (0518)	All close	Two fail to close	All lines run back	No line overfeeds	All SGs blow down	Automatically controlled	NA	Fails to run back	Throttles prior to SG high-level alarm	2.8E−7
9.12A (0520)	All close	Two fail to close	All lines run back	No line overfeeds	All SGs blow down for 30 min	Automatically controlled	NA	Fails to run back	Fails to throttle	2.9E−7
9.12B (0520)	All close	Two fail to close	All lines run back	No line overfeeds	All SGs blow down	Automatically controlled	NA	Fails to run back	Fails to throttle	4.4E−8
9.13A (0524)	All close	Two fail to close	All lines run back	No line overfeeds	All SGs blow down for 30 min	Overfeeds	NA	Runs back as required	Throttles prior to SG high-level alarm	2.0E−5
9.13B (0524)	All close	Two fail to close	All lines run back	No line overfeeds	All SGs blow down	Overfeeds	NA	Runs back as required	Throttles prior to SG high-level alarm	2.0E−7
9.14A (0855)	(Included in Sequence 9.19A)									
9.14B (0855)	(Included in Sequence 9.19B)									
9.15A (0856)	(Included in Sequence 9.20A)									
9.15B (0856)	(Included in Sequence 9.20B)									
9.16A (0857)	(Included in Sequence 9.21A)									
9.16B (0857)	(Included in Sequence 9.21B)									
9.17A (0859)	(Included in Sequence 9.22A)									
9.17B (0859)	(Included in Sequence 9.22B)									
9.18A (0863)	(Included in Sequence 9.23A)									
9.18B (0863)	(Included in Sequence 9.23B)									

Table 3.7 (Continued)

Sequence No.[b]	STM PORVs Close on Demand	SDVs Close on Demand	MFW Runs Back	MFW Isolates on Demand	SGs Blow Down	AFW Flow Automatically Controlled	OA: AFW Isolated to LP SG	Charging Flow Runs Back	OA: AFW Throttled	Frequency (yr^{-1})
9.19A (0855)	All close	> Three fail to close	All lines run back	No line overfeeds	All SGs blow down for 30 min	Automatically controlled	NA	Runs back as required	Throttles prior to SG high-level alarm	3.4E−3
9.19B (0855)	All close	> Three fail to close	All lines run back	No line overfeeds	All SGs blow down	Automatically controlled	NA	Runs back as required	Throttles prior to SG high-level alarm	7E−6
9.20A (0856)	All close	> Three fail to close	All lines run back	No line overfeeds	All SGs blow down for 30 min	Automatically controlled	NA	Runs back as required	Fails to throttle	3.5E−5
9.20B (0856)	All close	> Three fail to close	All lines run back	No line overfeeds	All SGs blow down	Automatically controlled	NA	Runs back as required	Fails to throttle	3.5E−6
9.21A (0857)	All close	> Three fail to close	All lines run back	No line overfeeds	All SGs blow down for 30 min	Automatically controlled	NA	Fails to run back	Throttles prior to SG high-level alarm	3.5E−5
9.21B (0857)	All close	> Three fail to close	All lines run back	No line overfeeds	All SGs blow down	Automatically controlled	NA	Fails to run back	Throttles prior to SG high-level alarm	7E−8
9.22A (0859)	All close	> Three fail to close	All lines run back	No line overfeeds	All SGs blow down for 30 min	Automatically controlled	NA	Fails to run back	Fails to throttle	3.5E−7
9.22B (0859)	All close	> Three fail to close	All lines run back	No line overfeeds	All SGs blow down	Automatically controlled	NA	Fails to run back	Fails to throttle	3.5E−8
9.23A (0863)	All close	> Three fail to close	All lines run back	No line overfeeds	All SGs blow down for 30 min	Overfeeds	NA	Runs back as required	Throttles prior to SG high-level alarm	2.6E−5
9.23B (0863)	All close	> Three fail to close	All lines run back	No line overfeeds	All SGs blow down	Overfeeds	NA	Runs back as required	Throttles prior to SG high-level alarm	5.2E−8
9.24 (0875)	All close	> Three fail to close	All lines run back	No line overfeeds	One SG blows down	Automatically controlled	Isolation occurs	Runs back as required	Throttles prior to SG high-level alarm	2.4E−5

Table 3.7 (Continued)

Sequence No.[b]	STM PORVs Close on Demand	SDVs Close on Demand	MFW Runs Back	MFW Isolates on Demand	SGs Blow Down	AFW Flow Automatically Controlled	OA: AFW Isolated to LP SG	Charging Flow Runs Back	OA: AFW Throttled	Frequency (yr^{-1})
9.25 (2682)	One fails to close	All close	All lines run back	No line overfeeds	One SG blows down	Automatically controlled	NA	Runs back as required	Throttles prior to SG high-level alarm	1.5E−1
9.26 (2683)	One fails to close	All close	All lines run back	No line overfeeds	One SG blows down	Automatically controlled	NA	Runs back as required	Fails to throttle	1.5E−3
9.27 (2684)	One fails to close	All close	All lines run back	No line overfeeds	One SG blows down	Automatically controlled	NA	Runs back run back	Fails to throttle	1.5E−3
9.28 (2686)	One fails to close	All close	All lines run back	No line overfeeds	One SG blows down	Automatically controlled	NA	Fails to run back	Fails to throttle	1.5E−5
9.29 (2690)	One fails to close	All close	All lines run back	No line overfeeds	One SG blows down	Overfeeds	NA	Runs back as required	Throttles prior to SG high-level alarm	1.1E−3
9.30 (2691)	One fails to close	All close	All lines run back	No line overfeeds	One SG blows down	Overfeeds	NA	Runs back as required	Fails to throttle	1.2E−5
9.31 (2692)	One fails to close	All close	All lines run back	No line overfeeds	One SG blows down	Overfeeds	NA	Fails to run back	Throttles prior to SG high-level alarm	1.2E−5
9.32 (2694)	One fails to close	All close	All lines run back	No line overfeeds	One SG blows down	Overfeeds	NA	Fails to run back	Fails to throttle	1.2E−7
9.33 (5550)	Two fail to close	All close	All lines run back	No line overfeeds	Two SGs blow down	Automatically controlled	NA	Runs back as required	Throttles prior to SG high-level alarm	1.4E−2
9.34 (5551)	Two fail to close	All close	All lines run back	No line overfeeds	Two SGs blow down	Automatically controlled	NA	Runs back as required	Fails to throttle	1.4E−4
9.35 (5552)	Two fail to close	All close	All lines run back	No line overfeeds	Two SGs blow down	Automatically controlled	NA	Fails to run back	Throttles prior to SG high-level alarm	1.4E−4
9.36 (5554)	Two fail to close	All close	All lines run back	No line overfeeds	Two SGs blow down	Automatically controlled	NA	Fails to run back	Fails to throttle	1.5E−6

Table 3.7 (Continued)

Sequence No.[b]	STM PORVs Close on Demand	SDVs Close on Demand	MFW Runs Back	MFW Isolates on Demand	SGs Blow Down	AFW Flow Automatically Controlled	OA: AFW Isolated to LP SG	Charging Flow Runs Back	OA: AFW Throttled	Frequency (yr^{-1})
9.37 (5558)	Two fail to close	All close	All lines run back	No line overfeeds	Two SGs blow down	Overfeeds	NA	Runs back as required	Throttles prior to SG high-level alarm	1.1E−4
9.38 (5559)	Two fail to close	All close	All lines run back	No line overfeeds	Two SGs blow down	Overfeeds	NA	Runs back as required	Fails to throttle	1.1E−6
9.39 (5560)	Two fail to close	All close	All lines run back	No line overfeeds	Two SGs blow down	Overfeeds	NA	Fails to run back	Throttles prior to SG high-level alarm	1.1E−6
9.40 (Res 165)	Two fail to close	All close	All lines run back	No line overfeeds	Two SGs blow down	Overfeeds	NA	Fails to run back	Fails to throttle	1.1E−8
9.41 (8418)	All fail to close	All close	All lines run back	No line overfeeds	All SGs blow down	Automatically controlled	NA	Runs back as required	Throttles prior to SG high-level alarm	4.1E−3
9.42 (8419)	All fail to close	All close	All lines run back	No line overfeeds	All SGs blow down	Automatically controlled	NA	Runs back run back	Fail to throttle	4.2E−5
9.43 (8420)	All fail to close	All close	All lines run back	No line overfeeds	All SGs blow down	Automatically controlled	NA	Fails to run back	Throttles prior to SG high-level alarm	4.2E−5
9.44 (8422)	All fail to close	All close	All lines run back	No line overfeeds	All SGs blow down	Automatically	NA	Fails to run back	Fails to throttle	4.2E−7
9.45 (8426)	All fail to close	All close	All lines run back	No line overfeeds	All SGs blow down	Overfeeds	NA	Runs back as required	Throttles prior to SG high-level alarm	3.1E−5
9.46 (8427)	All fail to close	All close	All lines run back	No line overfeeds	All SGs blow down	Overfeeds	NA	Runs back as required	Fails to throttle	3.2E−7
9.47 (8428)	All fail to close	All close	All lines run back	No line overfeeds	All SGs blow down	Overfeeds	NA	Fails to run back	Throttles prior to SG high-level alarm	3.1E−7

Table 3.7 (Continued)

Sequence No.[b]	STM PORVs Close on Demand	SDVs Close on Demand	MFW Runs Back	MFW Isolates on Demand	SGs Blow Down	AFW Flow Automatically Controlled	OA: AFW Isolated to LP SG	Charging Flow Runs Back	OA: AFW Throttled	Frequency (yr^{-1})
9.48 (0002)	All close	All close	One line fails to run back	No line overfeeds	No SGs blow down	Automatically controlled	NA	Runs back as required	Throttles prior to SG high-level alarm	4.3E−5
9.49 (0003)	All close	All close	One line fails to run back	No line overfeeds	No SGs blow down	Automatically controlled	NA	Runs back as required	Fails to throttle	4.9E−7
9.50 (0004)	All close	All close	One line fails to run back	No line overfeeds	No SGs blow down	Automatically controlled	NA	Fails to run back	Throttles prior to SG high-level alarm	4.9E−7
9.51 (Res 2)	All close	All close	One line fails to run back	No line overfeeds	No SGs blow down	Automatically controlled	NA	Fails to run back	Fails to throttle	4.4E−9
9.52 (0010)	All close	All close	One line fails to run back	No line overfeeds	No SGs blow down	Overfeeds	NA	Runs back as required	Throttles prior to SG high-level alarm	3.7E−7
9.53 (Res 4)	All close	All close	One line fails to run back	No line overfeeds	No SGs blow down	Overfeeds	NA	Runs back as required	Fails to throttle	3.3E−9
9.54 (Res 5)	All close	All close	One line fails to run back	No line overfeeds	No SGs blow down	Overfeeds	NA	Fails to run back	Throttles prior to SG high-level alarm	3.3E−9
9.55 (Res 5)	All close	All close	One line fails to run back	No line overfeeds	No SGs blow down	Overfeeds	NA	Fails to run back	Fails to throttle	3.3E−9
9.56 (0022)	All close	All close	One line fails to run back	One line overfeeds	No SGs blow down	Automatically controlled	NA	Runs back as required	Throttles prior to SG high-level alarm	4.6E−7
9.57 (Res 46)	All close	One fails to close	One line fails to run back	No line overfeeds	All SGs blow down	Automatically controlled	NA	Runs back as required	Throttles prior to SG high-level alarm	8.1E−8
9.58 (Res 46)	All close	One fails to close	One line fails to run back	No line overfeeds	All SGs blow down	Automatically controlled	NA	Runs back as required	Fails to throttle	<8.1E−8

Table 3.7 (Continued)

Sequence No.[b]	STM PORVs Close on Demand	SDVs Close on Demand	MFW Runs Back	MFW Isolates on Demand	SGs Blow Down	AFW Flow Automatically Controlled	OA: AFW Isolated to LP SG	Charging Flow Runs Back	OA: AFW Throttled	Frequency (yr^{-1})
9.59 (Res 46)	All close	One fails to close	One line fails to run back	No line overfeeds	All SGs blow down	Automatically controlled	NA	Fails to run back	Throttles prior to SG high-level alarm	<8.1E−8
9.60 (Res 46)	All close	One fails to close	One line fails to run back	No line overfeeds	All SGs blow down	Automatically controlled	NA	Fails to run back	Fails to throttle	<8.1E−8
9.61 (Res 46)	All close	One fails to close	One line fails to run back	No line overfeeds	All SGs blow down	Overfeeds	NA	Runs back as required	Throttles prior to SG high-level alarm	<8.1E−8
9.62 (Res 57)	All close	Two fail to close	One line fails to run back	No line overfeeds	All SGs blow down	Automatically controlled	NA	Runs back as required	Throttles prior to SG high-level alarm	1.5E−8
9.63 (Res 57)	All close	Two fail to close	One line fails to run back	No line overfeeds	All SGs blow down	Automatically controlled	NA	Runs back as required	Fails to throttle	<1.5E−8
9.64 (Res 57)	All close	Two fail to close	One line fails to run back	No line overfeeds	All SGs blow down	Automatically controlled	NA	Fails to run back	Throttles prior to SG high-level alarm	<1.5E−8
9.65 (Res 57)	All close	Two fail to close	One line fails to run back	No line overfeeds	All SGs blow down	Overfeeds	NA	Runs back as required	Throttles prior to SG high-level alarm	<1.5E−8
9.66 (0047)	All close	All close	Two lines fail to run back	No line overfeeds	No SGs blow down	Automatically controlled	NA	Runs back as required	Throttles prior to SG high-level alarm	4.0E−6
9.67 (Res 14)	All close	All close	Two lines fail to run back	No line overfeeds	No SGs blow down	Automatically controlled	NA	Runs back as required	Fails to throttle	4.1E−8
9.68 (Res 15)	All close	All close	Two lines fail to run back	No line overfeeds	No SGs blow down	Automatically controlled	NA	Fails to run back	Throttles prior to SG high-level alarm	4.1E−8
9.69 (Res 15)	All close	All close	Two lines fail to run back	No line overfeeds	No SGs blow down	Automatically controlled	NA	Fails to run back	Fails to throttle	<4.1E−8

Table 3.7 (Continued)

Sequence No.[b]	STM PORVs Close on Demand	SDVs Close on Demand	MFW Runs Back	MFW Isolates on Demand	SGs Blow Down	AFW Flow Automatically Controlled	OA: AFW Isolated to LP SG	Charging Flow Runs Back	OA: AFW Throttled	Frequency (yr^{-1})
9.70 (Res 17)	All close	All close	Two lines fail to run back	No line overfeeds	No SGs blow down	Overfeeds	NA	Runs back as required	Throttles prior to SG high-level alarm	3.1E−8
9.71 (Res 17)	All close	All close	Two lines fail to run back	No line overfeeds	No SGs blow down	Overfeeds	NA	Runs back as required	Fails to throttle	<3.1E−8
9.72 (Res 17)	All close	All close	Two lines fail to run back	No line overfeeds	No SGs blow down	Overfeeds	NA	Fails to run back	Throttles prior to SG high-level alarm	<3.1E−8
9.73 (Res 17)	All close	All close	Two lines fail to run back	No line overfeeds	No SGs blow down	Overfeeds	NA	Fails to run back	Fails to throttle	<3.1E−8
9.74 (Res 19)	All close	All close	Two lines fail to run back	One line overfeeds	No SGs blow down	Automatically controlled	NA	Runs back as required	Throttles prior to SG high-level alarm	8.9E−8
9.75 (Res 46)	All close	One fails to close	Two lines fail to run back	No line overfeeds	All SGs blow down	Automatically controlled	NA	Runs back as required	Throttles prior to SG high-level alarm	8.1E−8
9.76 (Res 46)	All close	One fails to close	Two lines fail to run back	No line overfeeds	All SGs blow down	Automatically controlled	NA	Runs back as required	Fails to throttle	<8.1E−8
9.77 (Res 46)	All close	One fails to close	Two lines fail to run back	No line overfeeds	All SGs blow down	Automatically controlled	NA	Fails to run back	Throttles prior to SG high-level alarm	<8.1E−8
9.78 (Res 46)	All close	One fails to close	Two lines fail to run back	No line overfeeds	All SGs blow down	Overfeeds	NA	Runs back as required	Throttles prior to SG high-level alarm	<8.1E−8
9.79 (Res 57)	All close	Two fail to close	Two lines fail to run back	No line overfeeds	All SGs blow down	Automatically controlled	NA	Runs back as required	Throttles prior to SG high-level alarm	<1.5E−8

Table 3.7 (Continued)

Sequence No.[b]	STM PORVs Close on Demand	SDVs Close on Demand	MFW Runs Back	MFW Isolates on Demand	SGs Blow Down	AFW Flow Automatically Controlled	OA: AFW Isolated to LP SG	Charging Flow Runs Back	OA: AFW Throttled	Frequency (yr^{-1})
9.80 (Res 57)	All close	Two fail to close	Two lines fail to run back	No line overfeeds	All SGs blow down	Overfeeds	NA	Runs back as required	Throttles prior to SG high-level alarm	<1.5E−8
9.81 (0112)	All close	All close	All lines fail to run back	No line overfeeds	No SGs blow down	Automatically controlled	NA	Runs back as required	Throttles prior to SG high-level alarm	1.1E−6
9.82 (Res 24)	All close	All close	All lines fail to run back	No line overfeeds	No SGs blow down	Overfeeds	NA	Runs back as required	Throttles prior to SG high-level alarm	8.6E−9
9.83 (Res 22)	All close	All close	All lines fail to run back	No line overfeeds	No SGs blow down	Automatically controlled	NA	Fails to run back	Throttles prior to SG high-level alarm	1.1E−8
9.84 (Res 22)	All close	All close	All lines fail to run back	No line overfeeds	No SGs blow down	Automatically controlled	NA	Fails to run back	Fails to throttle	<1.1E−8
9.85 (Res 24)	All close	All close	All lines fail to run back	No line overfeeds	No SGs blow down	Overfeeds	NA	Runs back as required	Throttles prior to SG high-level alarm	8.6E−9
9.86 (Res 46)	All close	One fails to close	All lines fail to run back	No line overfeeds	All SGs blow down	Automatically controlled	NA	Runs back as required	Throttles prior to SG high-level alarm	8.1E−8
9.87 (Res 57)	All close	Two fail to close	All lines fail to run back	No line overfeeds	All SGs blow down for 30 min	Automatically controlled	NA	Runs back as required	Throttles prior to SG high-level alarm	<1.5E−8
9.88 (0525)	All close	Two fail to close	All lines run back	No line overfeeds	All SGs blow down for 30 min	Overfeeds	NA	Runs back as required	Fails to throttle	1.9E−7
9.89 (0526)	All close	Two fail to close	All lines run back	No line overfeeds	All SGs blow down for 30 min	Overfeeds	NA	Fails to run back	Throttles prior to SG high-level alarm	2.3E−7

Table 3.7 (Continued)

Sequence No.[b]	STM PORVs Close on Demand	SDVs Close on Demand	MFW Runs Back	MFW Isolates on Demand	SGs Blow Down	AFW Flow Automatically Controlled	OA: AFW Isolated to LP SG	Charging Flow Runs Back	OA: AFW Throttled	Frequency (yr^{-1})
9.90 (0864)	All close	> Three fail to close	All lines run back	No line overfeeds	All SGs blow down for 30 min	Overfeeds	NA	Runs back as required	Fails to throttle	2.6E−7
9.91 (0865)	All close	> Three fail to close	All lines run back	No line overfeeds	All SGs blow down for 30 min	Overfeeds	NA	Fails to run back	Throttles prior to SG high-level alarm	2.6E−7
9.92 (0876)	All close	> Three fail to close	All lines run back	No line overfeeds	One SG blows down[c]	Automatically controlled	Isolation occurs	Runs back as required	Fails to throttle	3E−7
9.93 (0877)	All close	> Three fail to close	All lines run back	No line overfeeds	One SG blows down[c]	Automatically controlled	Isolation occurs	Fails to run back	Throttles prior to SG high-level alarm	2.3E−7
9.94 (0911)	All close	> Three fail to close	All lines run back	No line overfeeds	Two SGs blow down[c]	Automatically controlled	Isolation occurs	Runs back as required	Throttles prior to SG high-level alarm	7.2E−6
9.95 (0947)	All close	> Three fail to close	All lines run back	No line overfeeds	All SGs blow down[c]	Automatically controlled	NA	Runs back as required	Throttles prior to SG high-level alarm	1.9E−6
9.96 Residual	(Equivalent to a small-break LOCA)									4.3E−8
9.97 Residual	(Equivalent to a small-break LOCA coupled with a small steam-line break)									2.2E−6
9.98 Residual	(Equivalent to a small steam-line break with continued flow to break)									5.3E−8
9.99 Residual	(Equivalent to a small steam-line break with full pressurization)									4.3E−7

[a]The branches entitled "SI Signal Generated on Demand," "AFW Actuates on Demand," "HPI Occurs on Demand," and "PZR PORV Reseats on Demand" were successful in all sequences listed. Therefore, these headings do not appear in this table. There were other sequences for which not all of the branches were successful, but they did not survive the frequency screening. These sequences are included in the residual groups.

[b]As stated in the text, the letters "A" and "B" following the sequence number signify whether or not the MSIVs are closed by the operator. In the "A" sequences the operator is assumed to close the valves 30 minutes into the transient. In the "B" sequences, it is assumed that the MSIVs remain open for the 2-hour period.

[c]All steam generators blow down for 30 minutes; at this time, the operator closes the MSIVs, but one, two, or all three of them fail to close.

Table 3.8. Branch probabilities for large and small steam-line breaks at hot 0% power[a]

Tree Heading	Branch	Branch Probability[b] Large Break	Branch Probability[b] Small Break
SI signal generated on demand.	(1) SI signal is generated.	0.99997	
	(2) SI signal is not generated.	3×10^{-5}	
MFW isolates on demand.	(1) No line overfeeds.	0.99999	
	(2) One line overfeeds.[c]	9.0×10^{-6}	
	(3) Two lines overfeed.[c]	8.4×10^{-7}	
	(4) All three lines overfeed.[c]	8.1×10^{-8}	
SGs blow down.	If MSIV closure signal is generated,[d]		
	(1) No SGs blow down.	0.5	
	(2) One SG blows down.	0.5	
	(3) Two SGs blow down.	9.9×10^{-4}	
	(4) All three SGs blow down.	1.7×10^{-4}	
	If MSIV closure signal is not generated,[d]		
	(1) One SG blows down.	0.5	
	(2) All three SGs blow down.	0.5	
AFW actuates on demand.	(1) AFW actuates.	0.999	
	(2) AFW does not actuate.	1×10^{-3}	
AFW flow automatically controlled.	(1) AFW flow is automatically controlled at nominal rate.	0.9925	
	(2) Flow control failure leads to abnormally high AFW flow rate (overfeeds).	7.5×10^{-3}	
OA: AFW isolated to low-pressure SG.	(1) AFW isolation occurs.	0.9977	0.9983
	(2) AFW isolation fails to occur.	2.3×10^{-3}	1.7×10^{-3}
HPI occurs on demand.	If SI signal is generated,		
	(1) HPI occurs.	0.99939	
	(2) HPI fails to occur.	6.1×10^{-4}	
	If SI signal is not generated,		
	(1) Operator manually starts HPI.	0.99	
	(2) Operator fails to start HPI.	1×10^{-2}	
Charging flow runs back on demand.	(1) Charging flow runs back as required (repressurization limited).	0.9988	0.99
	(2) Charging flow fails to run back (repressurization not limited).	1.2×10^{-3}	1×10^{-2}

Table 3.8 (Continued)

Tree Heading	Branch	Branch Probability[b] Large Break	Branch Probability[b] Small Break
OA: AFW throttled.	If operator isolates AFW,		
	(1) Operator throttles AFW flow.	0.99	
	(2) Operator fails to throttle AFW flow.	1×10^{-2}	
	If operator fails to isolate AFW,		
	(1) Operator fails to throttle AFW flow.	1.0	
	(2) Operator throttles AFW flow.	0.0	
PZR PORV reseats on demand.	(1) PZR PORV reseats if charging flow fails to run back.	0.9988	
	(2) PZR PORV fails to reseat if charging flow fails to run back.	1.2×10^{-3}	

[a]Acronyms used in this table (listed in the order of their appearance) are: SI = safety injection, MFW = main feedwater, SG = steam generator, MSIV = main steam isolation valve, AFW = auxiliary feedwater, OA = operator action, HPI = high-pressure injection, PZR PORV = pressurizer power-operated relief valve, and MFIV = main feedwater isolation valve.

[b]Probabilities centered between the two columns apply to both break sizes.

[c]Includes failure of MFW regulating valves to run back, failure of one or both MFW pumps to trip on high level in any SG, and failure of MFIVs to close on SI signal.

[d]The MSIV closure signal may or may not be generated for a large steam-line break; it will *not* be generated for a small steam-line break at hot 0% power.

Also, although the data base is small, one of the four observed small breaks occurred during a startup condition. Thus, based on this information, 25% of the small-break frequency was assumed to occur at hot 0% power. This results in an initiating event frequency of $(2.0 \times 10^{-2}/\text{yr}) \times 0.25 = 5.0 \times 10^{-3}/\text{yr}$.

The branch headings and probabilities for the small break are presented in Table 3.8. The event tree developed from these probabilities and the 10^{-7} truncation frequency is presented in Figure 3.7. It shows that 19 sequences (out of the 292) survived the 10^{-7} screening level. As shown in Table 3.9, the sequence bounding process reduced this number to 16. The frequency for the group composed of those residual sequences which are neither specifically analyzed nor grouped with a specifically analyzed sequence is $2.5 \times 10^{-7}/\text{yr}$.

3.5.4. Large Steam-Line Break at Full Power

The initiating frequency of a large steam-line break at full power is based on the overall frequency for a large steam-line break multiplied by the fraction of time at full power: $(1.2 \times 10^{-3}/\text{yr}) \times 0.98 = 1.18 \times 10^{-3}/\text{yr}$. This initiating event frequency was used, together with the branch headings and probabilities given in Table 3.10, to produce the event tree shown in Figure 3.8.

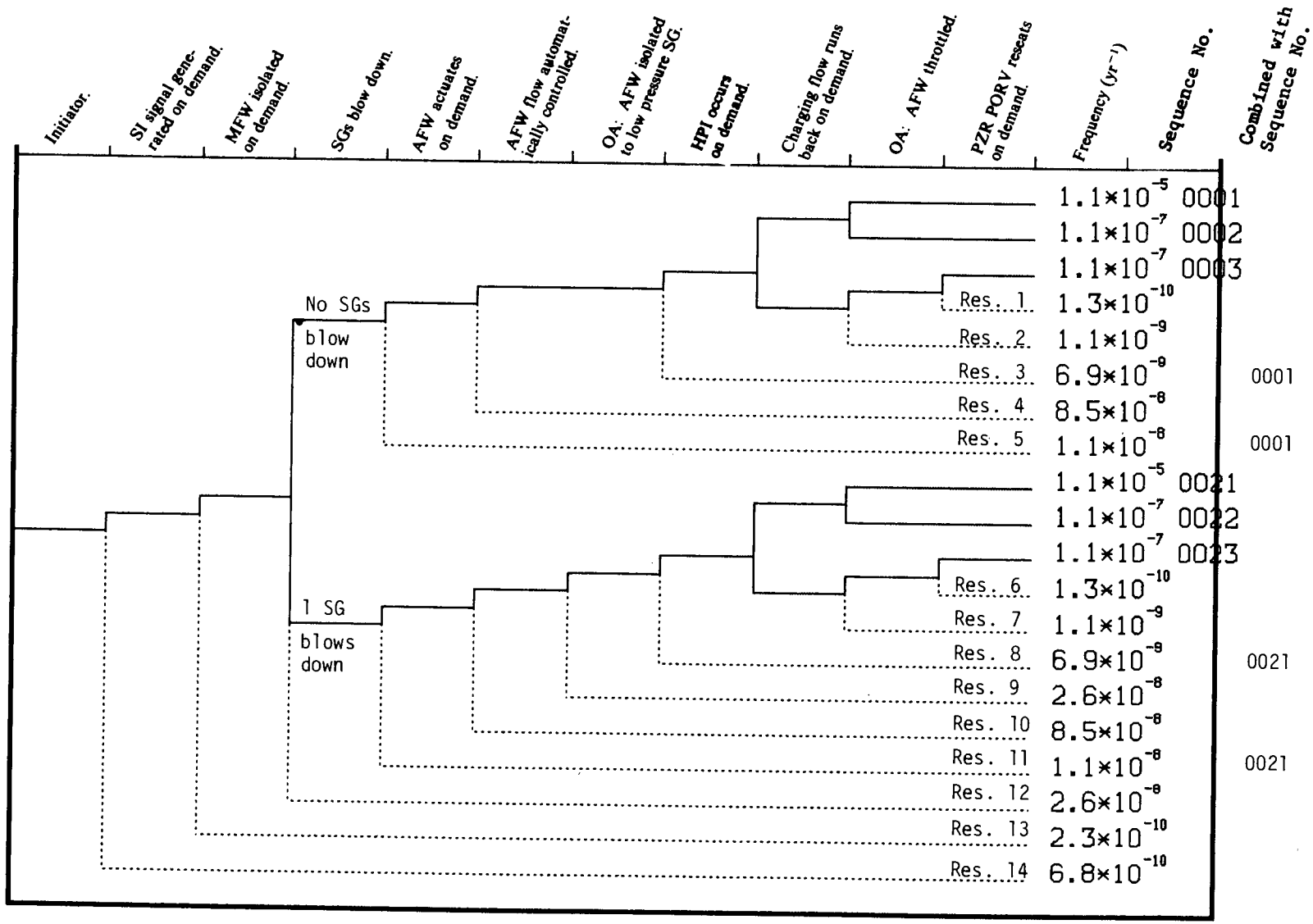

Figure 3.6. Event tree for large steam-line break at hot 0% power.

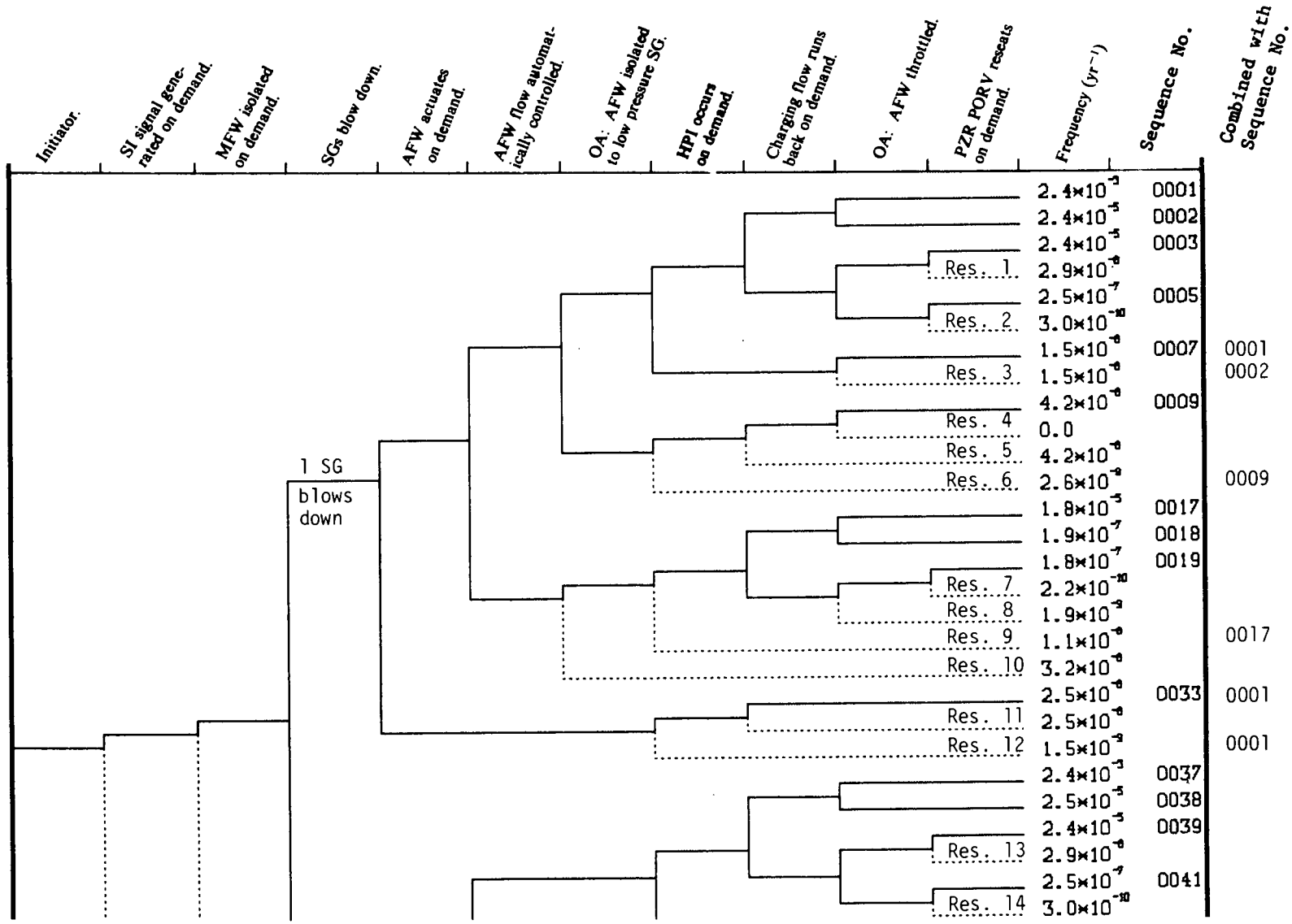
Initiator.
SI signal generated on demand.
MFW isolated on demand.
SGs blow down.
AFW actuates on demand.
AFW flow automatically controlled.
OA: AFW isolated to low pressure SG.
HPI occurs on demand.
Charging flow runs back on demand.
OA: AFW throttled.
PZR PORV reseats on demand.
Frequency (yr⁻¹)
Sequence No.
Combined with Sequence No.
1 SG blows down
Res. 1
Res. 2
Res. 3
Res. 4
Res. 5
Res. 6
Res. 7
Res. 8
Res. 9
Res. 10
Res. 11
Res. 12
Res. 13
Res. 14
2.4×10⁻⁵
2.4×10⁻⁵
2.4×10⁻⁵
2.9×10⁻⁸
2.5×10⁻⁷
3.0×10⁻¹⁰
1.5×10⁻⁸
1.5×10⁻⁸
4.2×10⁻⁸
0.0
4.2×10⁻⁸
2.6×10⁻⁹
1.8×10⁻⁵
1.9×10⁻⁷
1.8×10⁻⁷
2.2×10⁻¹⁰
1.9×10⁻⁹
1.1×10⁻⁸
3.2×10⁻⁸
2.5×10⁻⁸
2.5×10⁻⁸
1.5×10⁻⁹
2.4×10⁻⁵
2.5×10⁻⁵
2.4×10⁻⁵
2.9×10⁻⁸
2.5×10⁻⁷
3.0×10⁻¹⁰
0001
0002
0003
0005
0007
0009
0017
0018
0019
0033
0037
0038
0039
0041
0001
0002
0009
0017
0001
0001

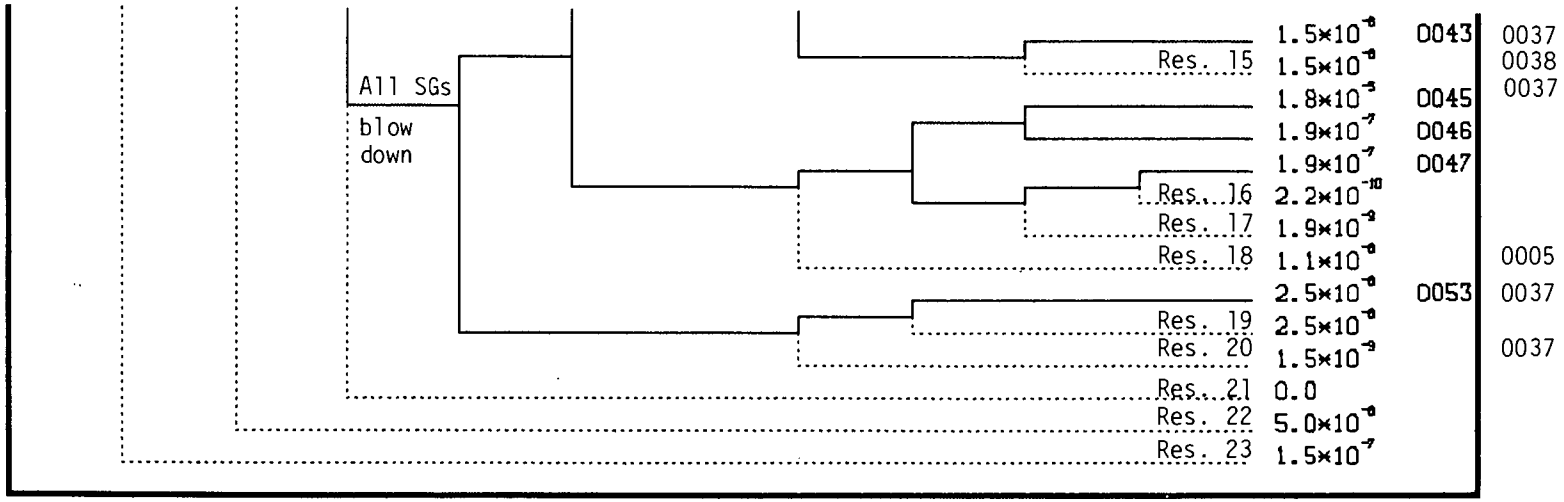

Figure 3.7. Event tree for small steam-line break at hot 0% power.

Table 3.9. Sequences to be analyzed for small and large steam-line breaks at hot 0% power[a]

Sequence No.	SI Signal Generated on Demand	MFW Isolated on Demand	SGs Blow Down	AFW Actuates on Demand	AFW Automatically Controlled	OA: AFW Isolated to LP SG	HPI Occurs on Demand	Charging Flow Runs Back	OA: AFW Throttled	Frequency (yr^{-1})
					Small Steam-Line Break					
7.1 (0001)	Signal is generated	No line overfeeds	One SG blows down	AFW actuates	Automatically controlled	Isolation occurs	HPI occurs	Runs back as required	Throttles prior to SG high-level alarm	2.4E−3
7.2 (0003)	Signal is generated	No line overfeeds	One SG blows down	AFW actuates	Automatically controlled	Isolation occurs	HPI occurs	Fails to run back	Throttles prior to SG high-level alarm	2.4E−5
7.3 (0002)	Signal is generated	No line overfeeds	One SG blows down	AFW actuates	Automatically controlled	Isolation occurs	HPI occurs	Runs back as required	Fails to throttle	2.4E−5
7.4 (Res 4)	Signal is generated	No line overfeeds	One SG blows down	AFW actuates	Automatically controlled	Fails to occur	HPI occurs	Runs back as required	Throttles prior to SG high-level alarm	0.0[b]
7.5 (Res 5)	Signal is generated	No line overfeeds	One SG blows down	AFW actuates	Automatically controlled	Fails to occur	HPI occurs	Fails to run back	Throttles prior to SG high-level alarm	4.2E−8
7.6 (0009)	Signal is generated	No line overfeeds	One SG blows down	AFW actuates	Automatically controlled	Fails to occur	HPI occurs	Runs back as required	Fails to throttle	4.2E−6
7.7 (0017)	Signal is generated	No line overfeeds	One SG blows down	AFW actuates	Overfeeds	Isolation occurs	HPI occurs	Runs back as required	Throttles prior to SG high-level alarm	1.8E−5
7.8 (Res 10)	Signal is generated	No line overfeeds	One SG blows down	AFW actuates	Overfeeds	Fails to occur	HPI occurs	Runs back as required	Throttles prior to SG high-level alarm	3.2E−8
7.9[c]	(Similar to Sequence 7.1)									
7.10[c]	(Similar to Sequence 7.4)									
7.11[c]	(Similar to Sequence 7.1)									
7.12 (0037)	Signal is generated	No line overfeeds	All SGs blow down	AFW actuates	Automatically controlled	NA[d]	HPI occurs	Runs back as required	Throttles prior to SG high-level alarm	2.4E−3

Table 3.9 (Continued)

Sequence No.	SI Signal Generated on Demand	MFW Isolated on Demand	SGs Blow Down	AFW Actuates on Demand	AFW Automatically Controlled	OA: AFW Isolated to LP SG	HPI Occurs on Demand	Charging Flow Runs Back	OA: AFW Throttled	Frequency (yr^{-1})
				Small Steam-Line Break (Continued)						
7.13 (0038)	Signal is generated	No line overfeeds	All SGs blow down	AFW actuates	Automatically controlled	NA	HPI occurs	Runs back as required	Fails to throttle	2.5E−5
7.14 (0039)	Signal is generated	No line overfeeds	All SGs blow down	AFW actuates	Automatically controlled	NA	HPI occurs	Fails to run back	Throttles prior to SG high-level alarm	2.4E−5
7.15 (0041)	Signal is generated	No line overfeeds	All SGs blow down	AFW actuates	Automatically controlled	NA	HPI occurs	Fails to run back	Fails to throttle	2.5E−7
7.16 (0005)	Signal is generated	No line overfeeds	One SG blows down	AFW actuates	Automatically controlled	Isolation occurs	HPI occurs	Fails to run back	Fails to throttle	2.5E−7
7.17 (0046)	Signal is generated	No line overfeeds	All SGs blow down	AFW actuates	Overfeeds	NA	HPI occurs	Runs back as required	Fails to throttle	1.9E−7
7.18 (0018)	Signal is generated	No line overfeeds	One SG blows down	AFW actuates	Overfeeds	Isolation occurs	HPI occurs	Runs back as required	Fails to throttle	1.9E−7
7.19 (0019)	Signal is generated	No line overfeeds	One SG blows down	AFW actuates	Overfeeds	Isolation occurs	HPI occurs	Fails to run back	Throttles prior to SG high-level alarm	1.8E−7
7.20	Residual Group									2.5E−7
				Large Steam-Line Break						
8.1 (0021)	Signal is generated	No line overfeeds	One SG blows down	AFW actuates	Automatically controlled	Isolation occurs	HPI occurs	Runs back as required	Throttles prior to SG high-level alarm	1.1E−5
8.2 (0023)	Signal is generated	No line overfeeds	One SG blows down	AFW actuates	Automatically controlled	Isolation occurs	HPI occurs	Fails to run back	Throttles prior to SG high-level alarm	1.1E−7
8.3 (0022)	Signal is generated	No line overfeeds	One SG blows down	AFW actuates	Automatically controlled	Isolation occurs	HPI occurs	Runs back as required	Fails to throttle	1.1E−7
8.4 (Res 9)	Signal is generated	No line overfeeds	One SG blows down	AFW actuates	Automatically controlled	Fails to occur	HPI occurs	Runs back as required	Fails to throttle	2.6E−8
8.5 (Res 10)	Signal is generated	No line overfeeds	One SG blows down	AFW actuates	Overfeeds	Isolation occurs	HPI occurs	Runs back as required	Throttles prior to SG high-level alarm	8.5E−8

Table 3.9 (Continued)

Sequence No.	SI Signal Generated on Demand	MFW Isolated on Demand	SGs Blow Down	AFW Actuates on Demand	AFW Automatically Controlled	OA: AFW Isolated to LP SG	HPI Occurs on Demand	Charging Flow Runs Back	OA: AFW Throttled	Frequency (yr^{-1})
				Large Steam-Line Break (Continued)						
8.6 (Res 10)	Signal is generated	No line overfeeds	One SG blows down	AFW actuates	Overfeeds	Fails to occur	HPI occurs	Runs back as required	Fails to throttle	<8.5E−8
8.7 (0001)	Signal is generated	No line overfeeds	No SGs blow down	AFW actuates	Automatically controlled	NA	HPI occurs	Runs back as required	Throttles prior to SG high-level alarm	1.1E−5
8.8 (0002)	Signal is generated	No line overfeeds	No SGs blow down	AFW actuates	Automatically controlled	NA	HPI occurs	Runs back as required	Fails to throttle	1.1E−7
8.9 (0003)	Signal is generated	No line overfeeds	No SGs blow down	AFW actuates	Automatically controlled	NA	HPI occurs	Fails to run back	Throttles prior to SG high-level alarm	1.1E−7
8.10	Residual Group									2.3E−7

[a]PZR PORVs reseat for all sequences listed; therefore, the heading "PZR PORV Reseats on Demand" does not appear in table. In some other sequences the PZR PORVs did not reseat, but these sequences did not survive the frequency screening and are included in the residual group.

[b]Because of the coupling factor imposed on the throttling of the AFW, given the failure to isolate the AFW, this sequence has a frequency of 0.0; that is, no credit is given for throttling the AFW if the operator failed to isolate the AFW.

[c]Sequences 7.9, 7.10, and 7.11 involved failure of the SDVs to isolate on demand. Subsequent analysis revealed that the SDVs probably would not open during this event; thus, failure of the SDVs to close was not considered.

[d]NA = not applicable.

Figure 3.8 shows that 21 sequences (out of the 1763) survived the 10^{-7} screening level for the large steam-line break at full power. This was reduced to the 15 sequences presented in Table 3.11 to be specifically considered for further analysis. The frequency associated with the remaining residual group totaled 4.4×10^{-7}/yr.

3.5.5. Small Steam-Line Break at Full Power

The initiating frequency for small steam-line breaks at full power is based on the overall frequency multiplied by the fraction of time spent at full power: 2.0×10^{-2}/yr $\times$ $0.75 = 1.5 \times 10^{-2}$/yr. The branch headings and probabilities are given in Table 3.10, and the resulting event tree developed for this initiating event is presented in Figure 3.9.

Table 3.11 presents the 29 sequences identified for thermal-hydraulic analysis. It should be noted that several of these are sequences which have frequencies less than 10^{-7}/yr. Based on our initial frequency analysis, these sequences were supplied to INEL for thermal-hydraulic analysis, and thus temperature, pressure and heat transfer coefficient data were developed for these sequences. As a result, these sequences were analyzed individually in order to reduce the size of the residual group. The remaining residual group has a frequency of 6.6×10^{-7}/yr.

3.5.6. Small-Break LOCA at Full Power

The small-break LOCA includes pressurizer PORV and SRV single failures, pump seal failures and small pipe breaks. The most probable failure is the PORV failure, but there is a very high probability of isolating the PORV early in the transient.

The initiating frequency for this event at full power is based on a frequency of 8.9×10^{-3}/yr for small-break LOCAs under all operating conditions times a factor of 0.91 to account for the fraction of full-power operations. The resulting initiating frequency is 8.1×10^{-3}/yr, which, when combined with the branch probabilities presented in Table 3.12, lead to the event tree shown in Figure 3.10. Thirty-one sequences out of a total 6,938 sequences remained for further analysis after the screening process.* These are shown in Table 3.13. The frequency associated with the residual group is 9.4×10^{-7}/yr.

*It should be noted that of the 31 sequences, nine included a late isolation of the break. These sequences are labeled as Sequence Series 12 in Table 3.15.

Table 3.10. Branch probabilities for large and small steam-line breaks at full power[a]

Tree Heading	Branch	Branch Probability[b] Large Break	Branch Probability[b] Small Break
SDVs close on demand.	(1) All five SDVs close.	NA[c]	0.99768
	(2) One SDV fails to close.	NA	1.6×10^{-3}
	(3) Two SDVs fail to close.	NA	3.0×10^{-4}
	(4) Three or more SDVs fail to close.	NA	4.2×10^{-4}
SI signal generated on demand.	(1) SI signal is generated.	0.99997	
	(2) SI signal is not generated.	3×10^{-5}	
MFW runs back and isolates on demand.	If SI signal is generated, MFW lines run back and isolate:		
	(1) All lines run back and MFW is isolated.	0.9999997	
	(2) One line overfeeds.[d]	2.8×10^{-7}	
	(3) Two lines overfeed.[d]	1.5×10^{-9}	
	(4) All three lines overfeed.[d]	1.0×10^{-10}	
	If SI signal is not generated, runback only occurs:		
	(1) All lines run back.	0.9999940	
	(2) One line overfeeds.[e]	5.3×10^{-6}	
	(3) Two lines overfeed.[e]	5.0×10^{-7}	
	(4) All three lines overfeed.[e]	1.4×10^{-7}	
SGs blow down.	If MSIV closure signal is generated,		
	(1) No SG blows down.	0.5	
	(2) One SG blows down.	0.5	
	(3) Two SGs blow down.	9.9×10^{-4}	
	(4) All three SGs blow down.	1.7×10^{-4}	
	If MSIV closure signal is not generated,		
	(1) One SG blows down.	0.5	
	(2) All three SGs blow down.	0.5	
AFW actuates on demand.	(1) AFW actuates.	0.999	
	(2) AFW does not actuate.	1×10^{-3}	
AFW flow automatically controlled.	(1) AFW flow is automatically controlled at nominal flow rate.	0.9925	
	(2) Flow control failure leads to abnormally high AFW flow rate (overfeeds).	7.5×10^{-3}	
OA: AFW isolated to low-pressure SG.	(1) AFW isolation occurs.	0.9977	0.9983
	(2) AFW isolation fails to occur.	2.3×10^{-3}	1.7×10^{-3}

Table 3.10 (Continued)

Tree Heading	Branch	Branch Probability[b] Large Break	Small Break
HPI occurs on demand.	If SI signal is generated,		
	(1) HPI occurs.	0.99939	
	(2) HPI fails to occur.	6.1×10^{-4}	
	If SI signal is not generated,		
	(1) Operator manually starts HPI.	0.99	
	(2) Operator fails to start HPI.	1×10^{-2}	
Charging flow runs back on demand.	(1) Charging flow runs back as required (repressurization limited).	0.99	
	(2) Charging flow fails to run back (repressurization not limited).	1×10^{-2}	
OA: AFW throttled.	If operator isolates AFW,		
	(1) Operator throttles AFW flow.	0.99	
	(2) Operator fails to throttle AFW flow.	1×10^{-2}	
	If operator fails to isolate AFW,		
	(1) Operator fails to throttle AFW flow.	1.0	
	(2) Operator throttles AFW flow.	0.0	
PZR PORV reseats on demand.	(1) PZR PORV reseats if charging flow fails to run back.	0.9988	
	(2) PZR PORV fails to reseat if charging flow fails to run back.	1.2×10^{-3}	

[a]Acronyms used in this table (in the order of their appearance) are: SDV = steam dump valve, SI = safety injection, MFW = main feedwater, SG = steam generator, MSIV = main steam isolation valve, AFW = auxiliary feedwater, OA = operator action, HPI = high-pressure injection, PZR PORV = pressurizer power-operated relief valve, and MFIV = main feedwater isolation valve.

[b]Probabilities centered between the two columns apply to both break sizes.

[c]NA = not applicable.

[d]Includes failure of MFW regulating valves to run back, failure of one or both MFW pumps to trip on high level in any SG, and failure of MFIVs to close on SI signal.

[e]Includes failure of MFW regulating valves to run back, and failure of MFW pumps to trip on high level in any SG.

3.5.7. Medium-Break LOCA at Full Power

The initiating frequency for a medium-break LOCA at full power is 9.8×10^{-4}/yr, based on an overall estimate for a medium-break LOCA of 1.0×10^{-3}/yr and 98.1% operation at full power. This event includes breaks equivalent to 2- or 2.5-in. lines which cannot be isolated. The branch headings and probabilities are shown in Table 3.12, and the resulting event tree is shown in Figure 3.11. Fourteen sequences out of a total of 6,824 sequences had frequencies of $\geq 10^{-7}$/yr and 12 were retained for thermal-hydraulic and fracture-mechanics analyses, as shown in Table 3.13. The frequency associated with the residual group is 2.1×10^{-7}/yr.

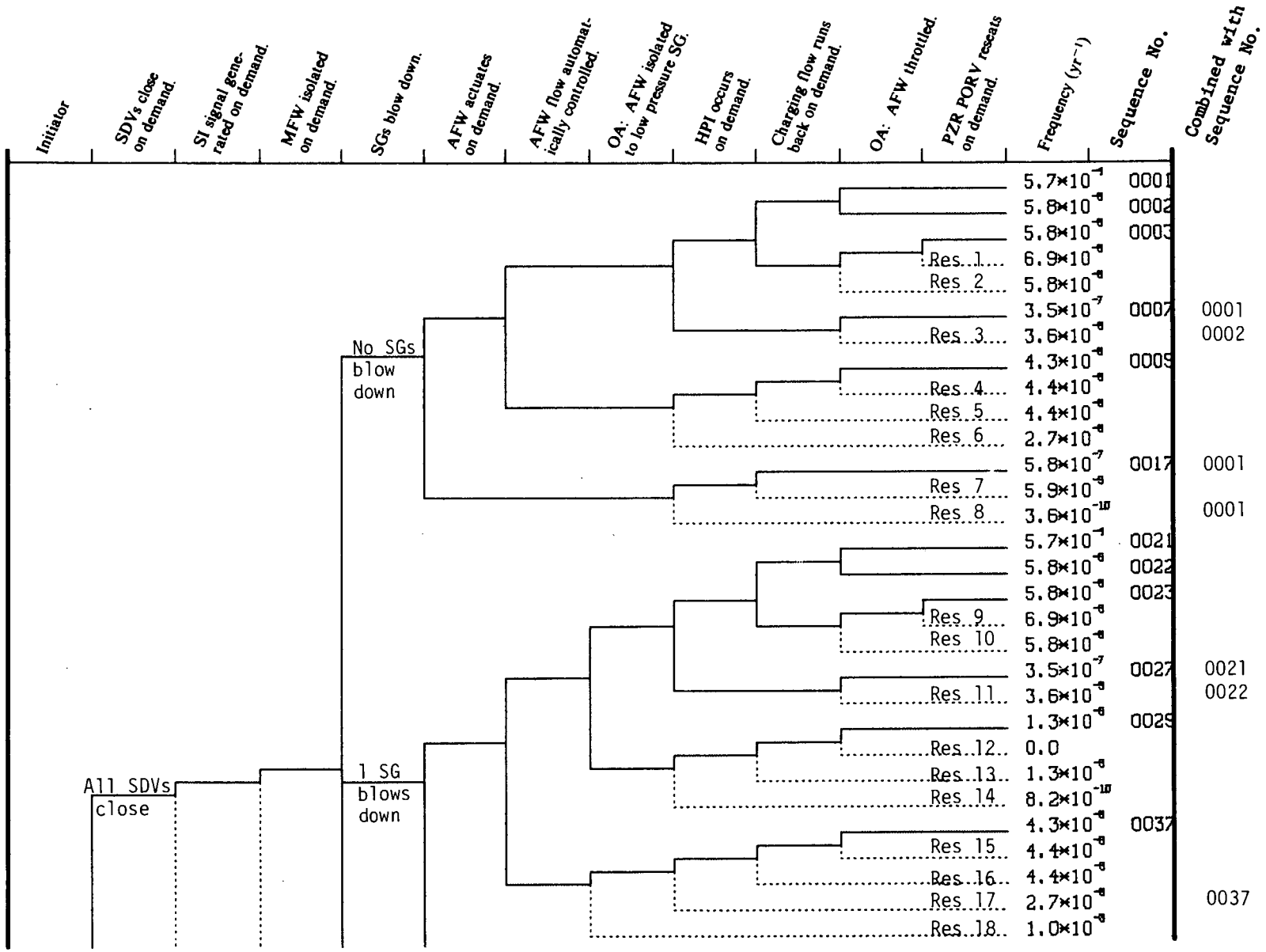
Initiator
SDVs close on demand.
SI signal generated on demand.
MFW isolated on demand.
SGs blow down.
AFW actuates on demand.
AFW flow automatically controlled.
OA: AFW isolated to low pressure SG.
HPI occurs on demand.
Charging flow runs back on demand.
OA: AFW throttled.
PZR PORV reseats on demand.
Frequency (yr⁻¹)
Sequence No.
Combined with Sequence No.
All SDVs close
No SGs blow down
1 SG blows down
Res 1
Res 2
Res 3
Res 4
Res 5
Res 6
Res 7
Res 8
Res 9
Res 10
Res 11
Res 12
Res 13
Res 14
Res 15
Res 16
Res 17
Res 18
5.7×10⁻¹
5.8×10⁻⁶
5.8×10⁻⁶
6.9×10⁻⁶
5.8×10⁻⁶
3.5×10⁻⁷
3.6×10⁻⁶
4.3×10⁻⁶
4.4×10⁻⁶
4.4×10⁻⁶
2.7×10⁻⁶
5.8×10⁻⁷
5.9×10⁻⁶
3.6×10⁻¹⁰
5.7×10⁻¹
5.8×10⁻⁶
5.8×10⁻⁶
6.9×10⁻⁶
5.8×10⁻⁶
3.5×10⁻⁷
3.6×10⁻⁶
1.3×10⁻⁶
0.0
1.3×10⁻⁶
8.2×10⁻¹⁰
4.3×10⁻⁶
4.4×10⁻⁶
4.4×10⁻⁶
2.7×10⁻⁶
1.0×10⁻⁶
0001
0002
0003
0007
0009
0017
0021
0022
0023
0027
0029
0037
0001
0002
0001
0021
0022
0037

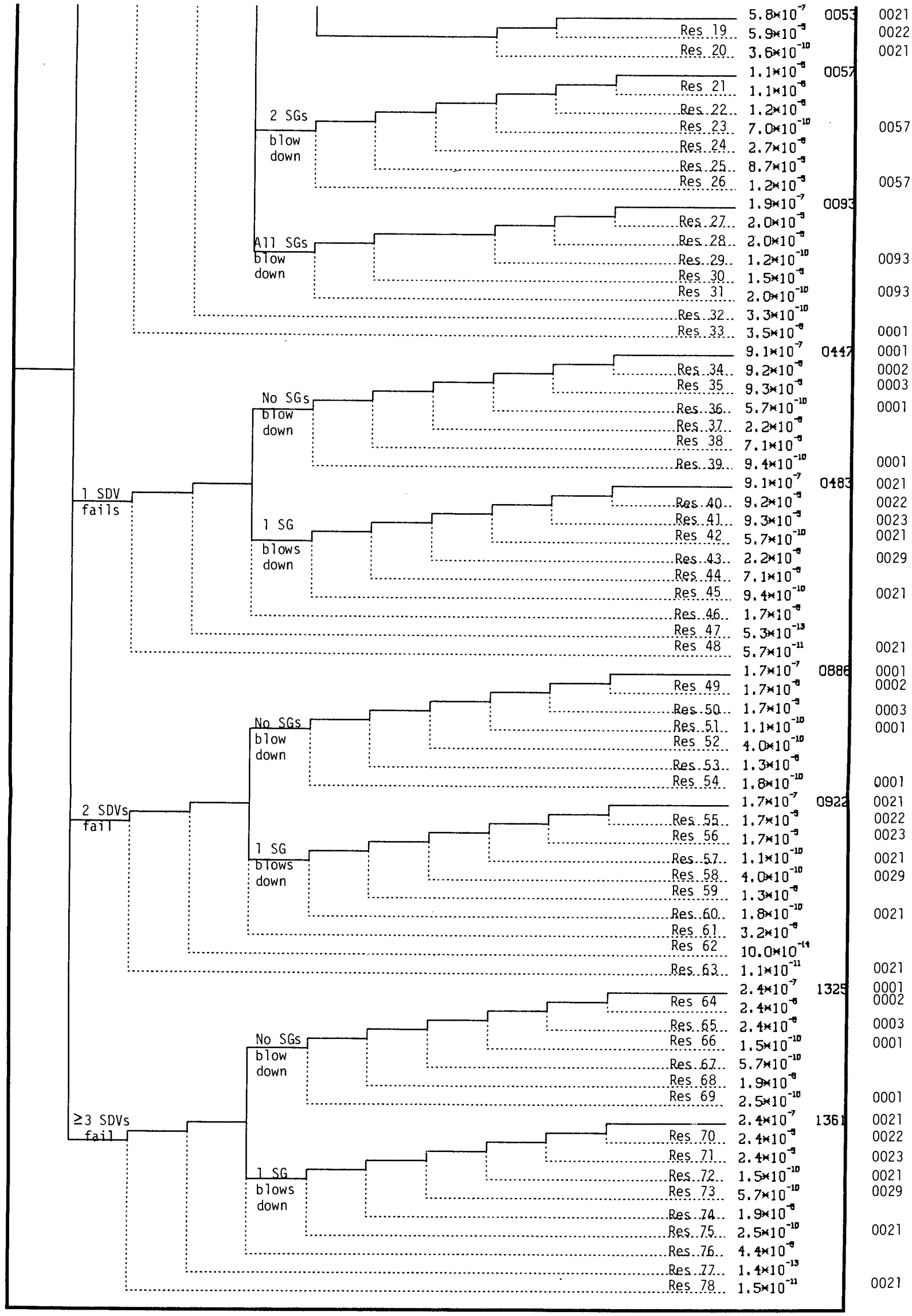

Figure 3.8. Event tree for large steam-line break at full power.

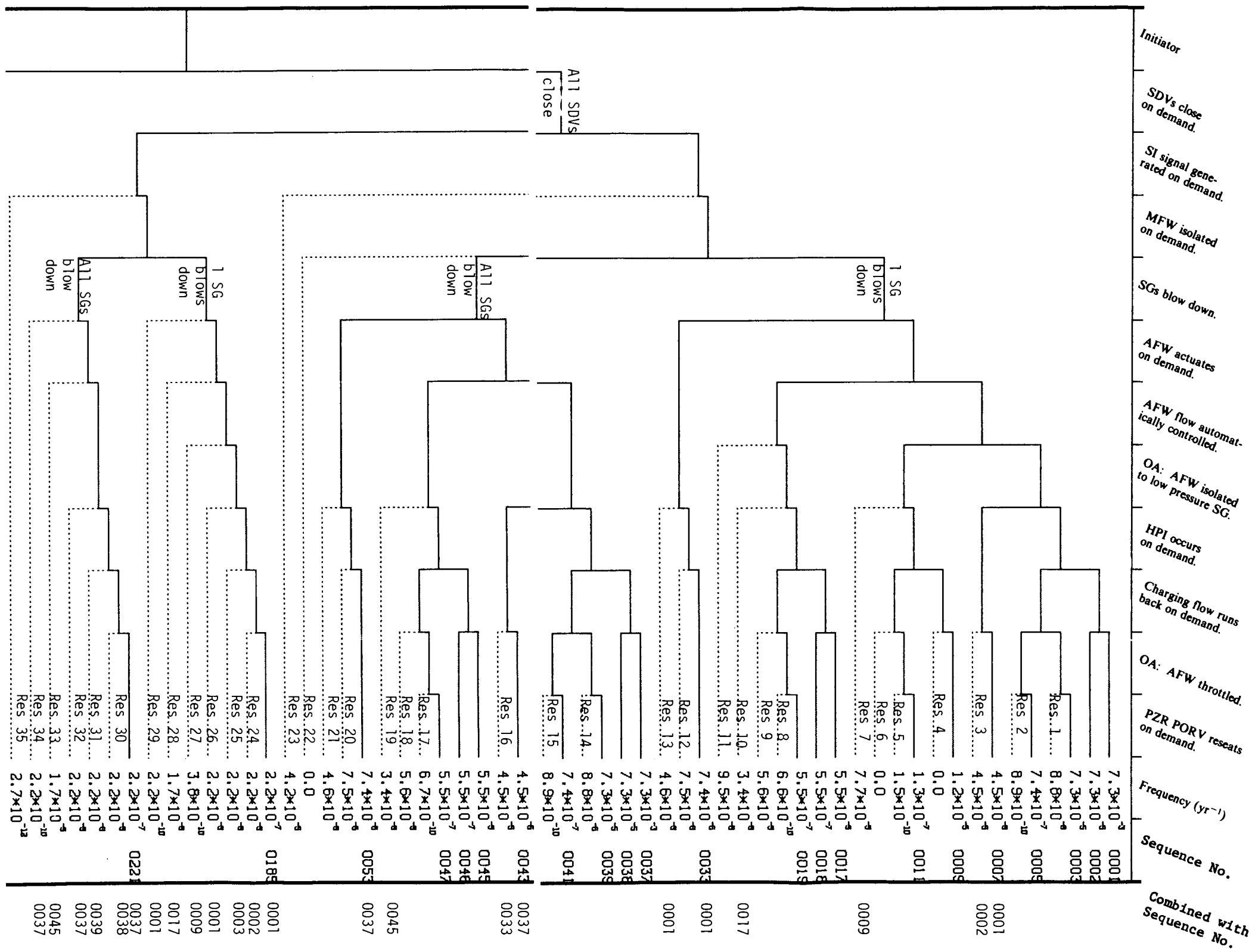
Initiator
SDVs close on demand.
SI signal generated on demand.
MFW isolated on demand.
SGs blow down.
AFW actuates on demand.
AFW flow automatically controlled.
OA: AFW isolated to low pressure SG.
HPI occurs on demand.
Charging flow runs back on demand.
OA: AFW throttled.
PZR PORV reseats on demand.
Frequency (yr⁻¹)
Sequence No.
Combined with Sequence No.
All SDVs close
1 SG blows down
All SGs blow down
Res. 1
Res. 2
Res. 3
Res. 4
Res. 5
Res. 6
Res. 7
Res. 8
Res. 9
Res. 10
Res. 11
Res. 12
Res. 13
Res. 14
Res. 15
Res. 16
Res. 17
Res. 18
Res. 19
Res. 20
Res. 21
Res. 22
Res. 23
Res. 24
Res. 25
Res. 26
Res. 27
Res. 28
Res. 29
Res. 30
Res. 31
Res. 32
Res. 33
Res. 34
Res. 35

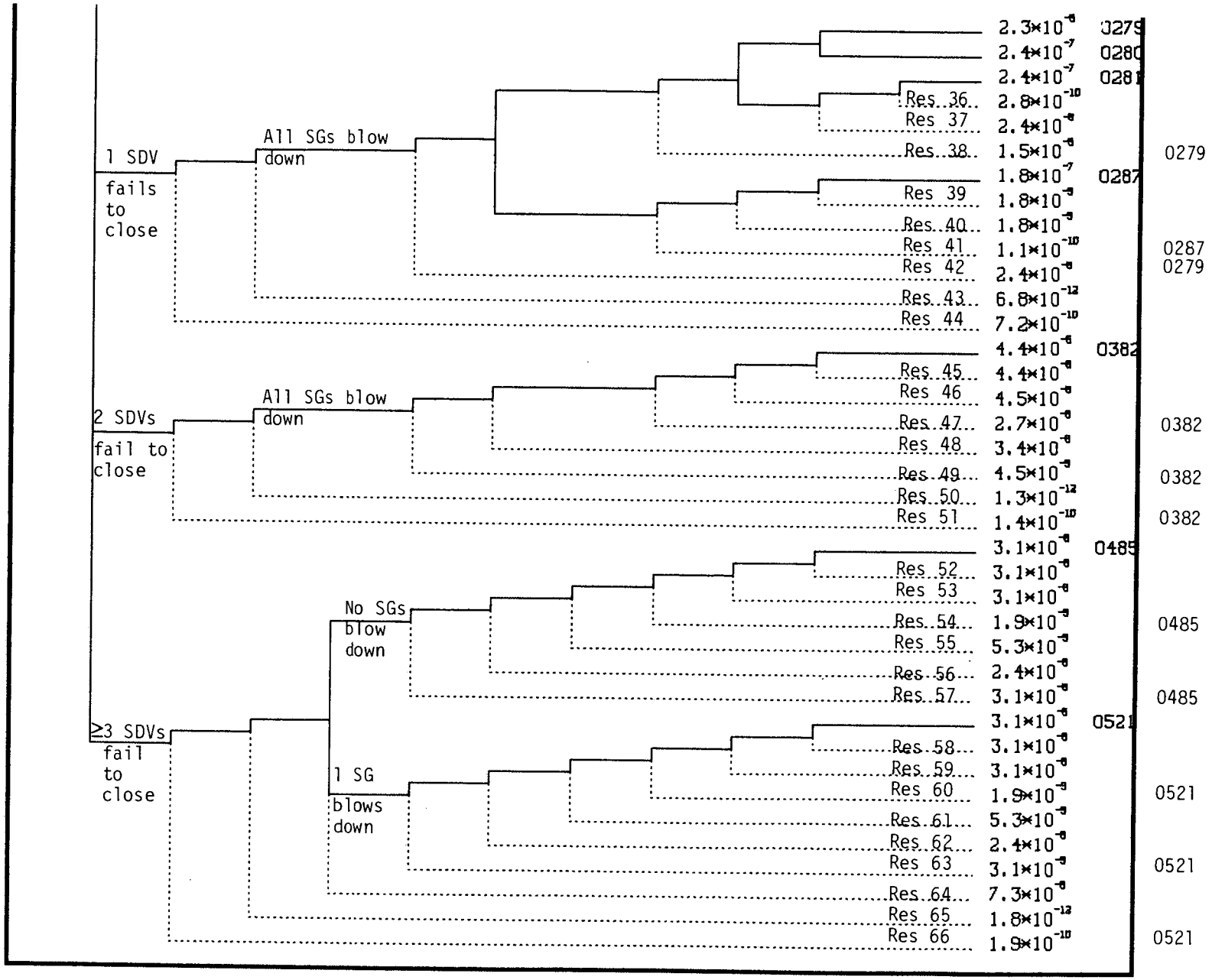

Figure 3.9. Event tree for small steam-line break at full power.

Table 3.11. Sequences to be analyzed for small and large steam-line breaks at full power[a]

Sequence No.	SDVs Close on Demand	MFW Runs Back and Isolates on Demand	SGs Blow Down	AFW Automatically Controlled	OA: AFW Isolated to LP SG	Charging Flow Runs Back	OA: AFW Throttled	Frequency (yr^{-1})
			Small Steam-Line Break					
5.1 (0001)	All close	Runs back and isolates	One SG blows down	Automatically controlled	Isolation occurs	Runs back as required	Throttles prior to SG high-level alarm	7.3E−3
5.2 (0003)	All close	Runs back and isolates	One SG blows down	Automatically controlled	Isolation occurs	Fails to run back	Throttles prior to SG high-level alarm	7.3E−5
5.3 (0002)	All close	Runs back and isolates	One SG blows down	Automatically controlled	Isolation occurs	Runs back as required	Fails to throttle	7.3E−5
5.4 (0005)	All close	Runs back and isolates	One SG blows down	Automatically controlled	Isolation occurs	Fails to run back	Fails to throttle	7.4E−7
5.5 (Res 4)	All close	Runs back and isolates	One SG blows down	Automatically controlled	Fails to occur	Runs back as required	Throttles prior to SG high-level alarm	0.0[b]
5.6 (Res 6)	All close	Runs back and isolates	One SG blows down	Automatically controlled	Fails to occur	Fails to runback	Throttles prior to SG high-level alarm	0.0[b]
5.7 (0009)	All close	Runs back and isolates	One SG blows down	Automatically controlled	Fails to occur	Runs back as required	Fails to throttle	1.2E−5
5.8 (0011)	All close	Runs back and isolates	One SG blows down	Automatically controlled	Fails to occur	Fails to run back	Fails to throttle	1.3E−7
5.9 (0017)	All close	Runs back and isolates	One SG blows down	Overfeeds	Isolation occurs	Runs back as required	Throttles prior to SG high-level alarm	5.5E−5

Table 3.11. (Continued)

Sequence No.	SDVs Close on Demand	MFW Runs Back and Isolates on Demand	SGs Blow Down	AFW Automatically Controlled	OA: AFW Isolated to LP SG	Charging Flow Runs Back	OA: AFW Throttled	Frequency (yr^{-1})
			Small Steam-Line Break (Continued)					
5.10 (0019)	All close	Runs back and isolates	One SG blows down	Overfeeds	Isolation occurs	Fails to run back	Throttles prior to SG high-level alarm	5.5E−7
5.11 (0018)	All close	Runs back and isolates	One SG blows down	Overfeeds	Isolation occurs	Runs back as required	Fails to throttle	5.5E−7
5.12 (Res 11)	All close	Runs back and isolates	One SG blows down	Overfeeds	Fails to occur	Runs back as required	Throttles prior to SG high-level alarm	0.0[b]
5.13 (Res 11)	All close	Runs back and isolates	One SG blows down	Overfeeds	Fails to occur	Runs back as required	Fails to throttle	9.5E−8
5.14 (0279)	One fails to close	Runs back and isolates	All SGs blow down[c]	Automatically controlled	NA[d]	Runs back as required	Throttles prior to SG high-level alarm	2.3E−5
5.15 (0281)	One fails to close	Runs back and isolates	All SGs blow down[c]	Automatically controlled	NA	Fails to run back	Throttles prior to SG high-level alarm	2.4E−7
5.16 (0280)	One fails to close	Runs back and isolates	All SGs blow down[c]	Automatically controlled	NA	Runs back as required	Fails to throttle	2.4E−7
5.17[e]	(Included in Sequence 5.14)							
5.18 (0287)	One fails to close	Runs back and isolates	All SGs blow down[c]	Overfeeds	NA	Runs back as required	Throttles prior to SG high-level alarm	1.8E−7

Table 3.11. (Continued)

Sequence No.	SDVs Close on Demand	MFW Runs Back and Isolates on Demand	SGs Blow Down	AFW Automatically Controlled	OA: AFW Isolated to LP SG	Charging Flow Runs Back	OA: AFW Throttled	Frequency (yr^{-1})
			Small Steam-Line Break (Continued)					
5.19 (0382)	Two fail to close	Runs back and isolates	All SGs blow down[c]	Automatically controlled	NA	Runs back as required	Throttles prior to SG high-level alarm	4.4E−6
5.20[e]	(Included in Sequence 5.19)							
5.21 (0037)	All close	Runs back and isolates	All SGs blow down[c]	Automatically controlled	NA	Runs back as required	Throttles prior to SG high-level alarm	7.3E−3
5.22 (0039)	All close	Runs back and isolates	All SGs blow down[c]	Automatically controlled	NA	Fails to run back	Throttles prior to SG high-level alarm	7.3E−5
5.23 (0038)	All close	Runs back and isolates	All SGs blow down[c]	Automatically controlled	NA	Runs back as required	Fails to throttle	7.3E−5
5.24 (0045)	All close	Runs back and isolates	All SGs blow down[c]	Overfeeds	NA	Runs back as required	Throttles prior to SG high-level alarm	5.5E−5
5.25 (0041)	All close	Runs back and isolates	All SGs blow down[c]	Automatically controlled	NA	Fails to run back	Fails to throttle	7.4E−7
5.26 (0046)	All close	Runs back and isolates	All SGs blow down[c]	Overfeeds	NA	Fails to run back	Fails to throttle	5.5E−7
5.27 (0047)	All close	Runs back and isolates	All SGs blow down[c]	Overfeeds	NA	Fails to run back	Throttles prior to SG high-level alarm	5.5E−7

Table 3.11. (Continued)

Sequence No.	SDVs Close on Demand	MFW Runs Back and Isolates on Demand	SGs Blow Down	AFW Automatically Controlled	OA: AFW Isolated to LP SG	Charging Flow Runs Back	OA: AFW Throttled	Frequency (yr^{-1})
			Small Steam-Line Break (Continued)					
5.28 (0485)	>Three fail to close	Runs back and isolates	All SGs blow down for 30 min[f]	Automatically controlled	Isolation occurs	Runs back as required	Throttles prior to SG high-level alarm	3.1E−6
5.29 (0521)	>Three fail to close	Runs back and isolates	One SG blows down	Automatically controlled	Isolation occurs	Runs back as required	Throttles prior to SG high-level alarm	3.1E−6
5.30	Residual Group							6.6E−7
			Large Steam-Line Break					
6.1 (0021)	All close	Runs back and isolates	One SG blows down	Automatically controlled	Isolation occurs	Runs back as required	Throttles prior to SG high-level alarm	5.7E−4
6.2 (0023)	All close	Runs back and isolates	One SG blows down	Automatically controlled	Isolation occurs	Fails to run back	Throttles prior to SG high-level alarm	5.8E−6
6.3 (0022)	All close	Runs back and isolates	One SG blows down	Automatically controlled	Isolation occurs	Runs back as required	Fails to throttle	5.8E−6
6.4 (Res 10)	All close	Runs back and isolates	One SG blows down	Automatically controlled	Isolation occurs	Fails to run back	Fails to throttle	5.8E−8
6.5 (Res 12)	All close	Runs back and isolates	One SG blows down	Automatically controlled	Fails to occur	Runs back as required	Throttles prior to SG high-level alarm	0.0[b]
6.6 (Res 13)	All close	Runs back and isolates	One SG blows down	Automatically controlled	Fails to occur	Fails to run back	Fails to throttle	1.3E−8

Table 3.11. (Continued)

Sequence No.	SDVs Close on Demand	MFW Runs Back and Isolates on Demand	SGs Blow Down	AFW Automatically Controlled	OA: AFW Isolated to LP SG	Charging Flow Runs Back	OA: AFW Throttled	Frequency (yr^{-1})
			Large Steam-Line Break (Continued)					
6.7 (0029)	All close	Runs back and isolates	One SG blows down	Automatically controlled	Fails to occur	Runs back as required	Fails to throttle	1.3E−6
6.8 (0037)	All close	Runs back and isolates	One SG blows down	Overfeeds	Isolation occurs	Runs back as required	Throttles prior to SG high-level alarm	4.3E−6
6.9 (Res 18)	All close	Runs back and isolates	One SG blows down	Overfeeds	Fails to occur	Runs back as required	Fails to throttle	1.0E−8
6.10 (0057)	All close	Runs back and isolates	Two SGs blow down	Automatically controlled	Isolation occurs	Runs back as required	Throttles prior to SG high-level alarm	1.1E−6
6.11 (0093)	All close	Runs back and isolates	All SGs blow down	Automatically controlled	NA	Runs back as required	Throttles prior to SG high-level alarm	1.9E−7
6.12 (0001)	All close	Runs back and isolates	No SGs blow down	Automatically controlled	NA	Runs back as required	Throttles prior to SG high-level alarm	5.7E−4
6.13 (0002)	All close	Runs back and isolates	No SGs blow down	Automatically controlled	NA	Runs back as required	Fails to throttle	5.9E−6
6.14 (0003)	All close	Runs back and isolates	No SGs blow down	Automatically controlled	NA	Fails to run back	Throttles prior to SG high-level alarm	5.8E−6

Table 3.11. (Continued)

Sequence No.	SDVs Close on Demand	MFW Runs Back and Isolates on Demand	SGs Blow Down	AFW Automatically Controlled	OA: AFW Isolated to LP SG	Charging Flow Runs Back	OA: AFW Throttled	Frequency (yr^{-1})
			Large Steam-Line Break (Continued)					
6.15 (0009)	All close	Runs back and isolates	No SGs blow down	Overfeeds	NA	Runs back as required	Throttles prior to SG high-level alarm	4.3E−6
6.16	Residual Group							4.4E-7

[a]The branches entitled "SI Signal Generated on Demand," "AFW Actuates on Demand," "HPI Occurs on Demand," and "PZR PORV Reseats on Demand" were successful in all sequences listed. Therefore, these headings do not appear in this table. There were sequences other than those included in the table for which not all of the branches were successful, but they did not survive the frequency screening. These sequences are included in the residual groups.

[b]Because of the coupling factor imposed on the throttling of the AFW, given the failure to isolate the AFW, this sequence has a frequency of 0.0; that is, no credit is given for throttling the AFW if the operator fails to isolate the AFW.

[c]For a small steam-line break downstream of the MSIVs, no credit was taken for closure of MSIVs; this was used as a bounding situation and did not have a major impact on the results.

[d]NA = not applicable.

[e]Sequence is no longer applicable and does not appear on event tree, since operator would not be called upon to isolate AFW if all steam generators were blowing down.

[f]All steam generators blow down for 30 minutes; at this time the operator closes the MSIVs, but one, two, or all three of them fail to close.

Table 3.12. Branch probabilities for small- and medium-break LOCAs at full power[a]

Tree Heading	Branch	Branch Probability[b] Small-Break LOCA	Branch Probability[b] Medium-Break LOCA
Turbine trips on demand.	(1) Turbine trips on demand.	0.99996	
	(2) Turbine fails to trip.	4×10^{-5}	
STM PORVs close on demand.	(1) All three STM PORVs close.	0.97981	
	(2) One STM PORV fails to close.	1.8×10^{-2}	
	(3) Two STM PORVs fail to close.	1.7×10^{-3}	
	(4) Three STM PORVs fail to close.	4.9×10^{-4}	
SDVs close on demand.	(1) All five SDVs close.	0.99768	
	(2) One SDV fails to close.	1.6×10^{-3}	
	(3) Two SDVs fail to close.	3.0×10^{-4}	
	(4) Three or more SDVs fail to close.	4.2×10^{-4}	
SI signal generated on demand.	(1) SI signal is generated.	0.99997	
	(2) SI signal is not generated.	3×10^{-5}	
MFW runs back and isolates on demand.	If SI signal is generated, MFW lines run back and isolate:		
	(1) All lines run back and MFW is isolated.	0.9999997	
	(2) One line overfeeds.[c]	2.8×10^{-7}	
	(3) Two lines overfeed.[c]	1.5×10^{-9}	
	(4) Three lines overfeed.[c]	1.0×10^{-10}	
	If SI signal is not generated, runback only occurs:		
	(1) All lines run back.	0.9999940	
	(2) One line overfeeds.[d]	5.3×10^{-6}	
	(3) Two lines overfeed.[d]	5.0×10^{-7}	
	(4) Three lines overfeed.[d]	1.4×10^{-7}	
HPI occurs on demand.	If SI signal is generated,		
	(1) HPI occurs.	0.99939	
	(2) HPI fails to occur.	6.1×10^{-4}	
	If SI signal is not generated,		
	(1) Operator manually starts HPI.	0.99	
	(2) Operator fails to start HPI.	1×10^{-2}	
SGs blow down.	If one or more SDVs fail,		
	(1) Three SGs blow down.	1.0	
	If three or more SDVs fail,		
	(1) No SGs blow down.	0.99087	
	(2) One SG blows down.	6.6×10^{-3}	
	(3) Two SGs blow down.	2.0×10^{-3}	
	(4) All three SGs blow down.	5.3×10^{-4}	
	If one, two, or three STM PORVs fail, then, respectively,		
	(1) One SG blows down.	1.0	
	(2) Two SGs blow down.	1.0	
	(3) All three SGs blow down.	1.0	
	If MSIV closure signal is not generated,		
	(1) All three SGs blow down.	1.0	
AFW actuates on demand.	(1) AFW actuates.	0.999	
	(2) AFW does not actuate.	1×10^{-3}	

Table 3.12 (Continued)

Tree Heading	Branch	Branch Probability[b] Small-Break LOCA	Branch Probability[b] Medium-Break LOCA
AFW flow automatically controlled.	(1) AFW is automatically controlled at nominal rate.	0.9925	
	(2) Flow control failure leads to abnormally high AFW flow rate (overfeeds).	7.5×10^{-3}	
OA: AFW isolated to low-pressure SG.	(1) AFW isolation occurs.	0.9983	
	(2) AFW isolation fails to occur.	1.7×10^{-3}	
Accumulators discharge.	(1) Accumulators discharge when required.	0.99999	
	(2) Accumulators fail to discharge.	1×10^{-5}	
OA: Break not isolated.[e]	(1) Break not isolatable or operator fails to isolate break.	0.9610	1.0
	(2) Operator isolates break.	3.9×10^{-2}	0.0
Charging flow runs back on demand.[e]	(1) Charging flow runs back as required (repressurization limited).	0.99	NA[f]
	(2) Charging flow fails to run back (repressurization not limited).	1×10^{-2}	NA
OA: AFW throttled.	If operator isolates AFW,		
	(1) Operator throttles AFW flow.	0.99	
	(2) Operator fails to throttle AFW flow.	1×10^{-2}	
	If operator fails to isolate AFW,		
	(1) Operator fails to throttle AFW flow.	1.0	
	(2) Operator throttles AFW flow.	0.0	
LPI occurs on demand.	If SI signal is generated,		
	(1) LPI occurs as required.	0.99975	
	(2) LPI fails to occur.	2.5×10^{-4}	
	If SI signal is not generated,		
	(1) Operator manually starts LPI.	0.99	
	(2) Operator fails to start LPI.	1×10^{-2}	
	If SI signal is not generated and if operator fails to start HPI,		
	(1) Operator fails to start LPI.	1.0	
	(2) Operator manually starts LPI.	0.0	

[a]Acronyms used in this table (in the order of their appearance) are: STM PORV = steam power-operated relief valve, SDV = steam dump valve, SI = safety injection, MFW = main feedwater, HPI = high-pressure injection, SG = steam generator, AFW = auxiliary feedwater, OA = operator action, LPI = low-pressure injection, and MFIV = main feedwater isolation valve.

[b]Probabilities centered between the two columns apply to both break sizes.

[c]Includes failure of MFW regulating valves to run back, failure of one or both MFW pumps to trip on high level in any SG, and failure of MFIVs to close on SI signal.

[d]Includes failure of MFW regulating valves to run back, and failure of MFW pumps to trip on high level in any SG.

[e]These headings apply only to small-break LOCAs and not to medium-break LOCAs.

[f]NA = not applicable.

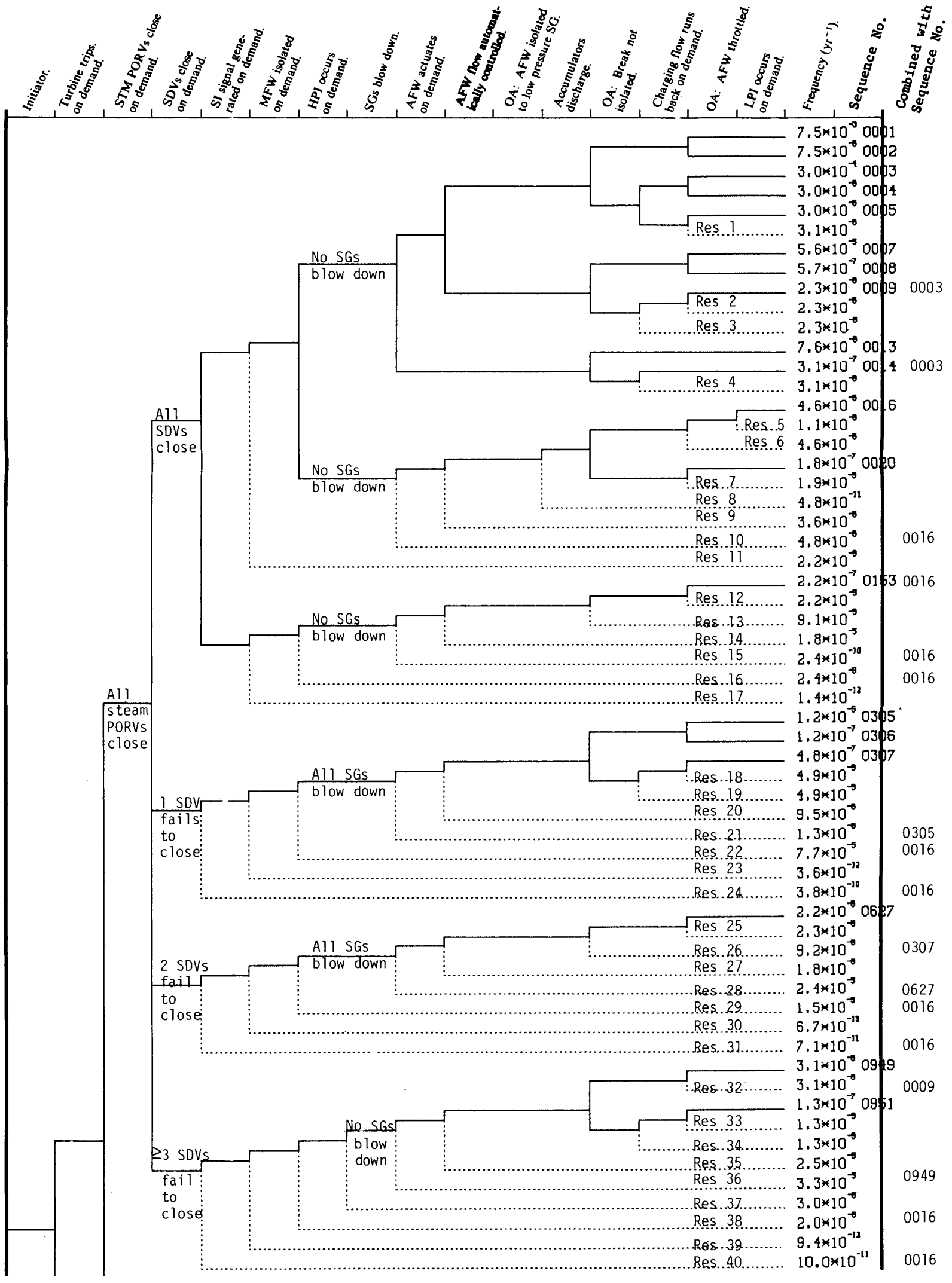
Initiator.
Turbine trips. on demand.
STM PORVs close on demand.
SDVs close on demand.
SI signal generated on demand.
MFW isolated on demand.
HPI occurs on demand.
SGs blow down.
AFW actuates on demand.
AFW flow automatically controlled.
OA: AFW isolated to low pressure SG.
Accumulators discharge.
OA: Break not isolated.
Charging flow runs back on demand.
OA: AFW throttled.
LPI occurs on demand.
Frequency (yr⁻¹).
Sequence No.
Combined with Sequence No.
All SDVs close
All steam PORVs close
1 SDV fails to close
2 SDVs fail to close
≥3 SDVs fail to close
No SGs blow down
All SGs blow down
Res 1
Res 2
Res 3
Res 4
Res 5
Res 6
Res 7
Res 8
Res 9
Res 10
Res 11
Res 12
Res 13
Res 14
Res 15
Res 16
Res 17
Res 18
Res 19
Res 20
Res 21
Res 22
Res 23
Res 24
Res 25
Res 26
Res 27
Res 28
Res 29
Res 30
Res 31
Res 32
Res 33
Res 34
Res 35
Res 36
Res 37
Res 38
Res 39
Res 40
7.5×10⁻⁶ 0001
7.5×10⁻⁶ 0002
3.0×10⁻⁴ 0003
3.0×10⁻⁶ 0004
3.0×10⁻⁶ 0005
3.1×10⁻⁶
5.6×10⁻⁵ 0007
5.7×10⁻⁷ 0008
2.3×10⁻⁶ 0009 0003
2.3×10⁻⁶
2.3×10⁻⁶
7.6×10⁻⁶ 0013
3.1×10⁻⁷ 0014 0003
3.1×10⁻⁶
4.6×10⁻⁶ 0016
1.1×10⁻⁶
4.6×10⁻⁶
1.8×10⁻⁷ 0020
1.9×10⁻⁶
4.8×10⁻¹¹
3.6×10⁻⁶
4.8×10⁻⁶ 0016
2.2×10⁻⁶
2.2×10⁻⁷ 0153 0016
2.2×10⁻⁶
9.1×10⁻⁶
1.8×10⁻⁵
2.4×10⁻¹⁰ 0016
2.4×10⁻⁶ 0016
1.4×10⁻¹²
1.2×10⁻⁵ 0305
1.2×10⁻⁷ 0306
4.8×10⁻⁷ 0307
4.9×10⁻⁶
4.9×10⁻⁶
9.5×10⁻⁶
1.3×10⁻⁶ 0305
7.7×10⁻⁵ 0016
3.6×10⁻¹²
3.8×10⁻¹⁰ 0016
2.2×10⁻⁶ 0627
2.3×10⁻⁶
9.2×10⁻⁶ 0307
1.8×10⁻⁶
2.4×10⁻⁵ 0627
1.5×10⁻⁵ 0016
6.7×10⁻¹²
7.1×10⁻¹¹ 0016
3.1×10⁻⁶ 0949
3.1×10⁻⁶ 0009
1.3×10⁻⁷ 0951
1.3×10⁻⁶
1.3×10⁻⁶
2.5×10⁻⁶
3.3×10⁻⁵ 0949
3.0×10⁻⁶
2.0×10⁻⁶ 0016
9.4×10⁻¹²
10.0×10⁻¹¹ 0016

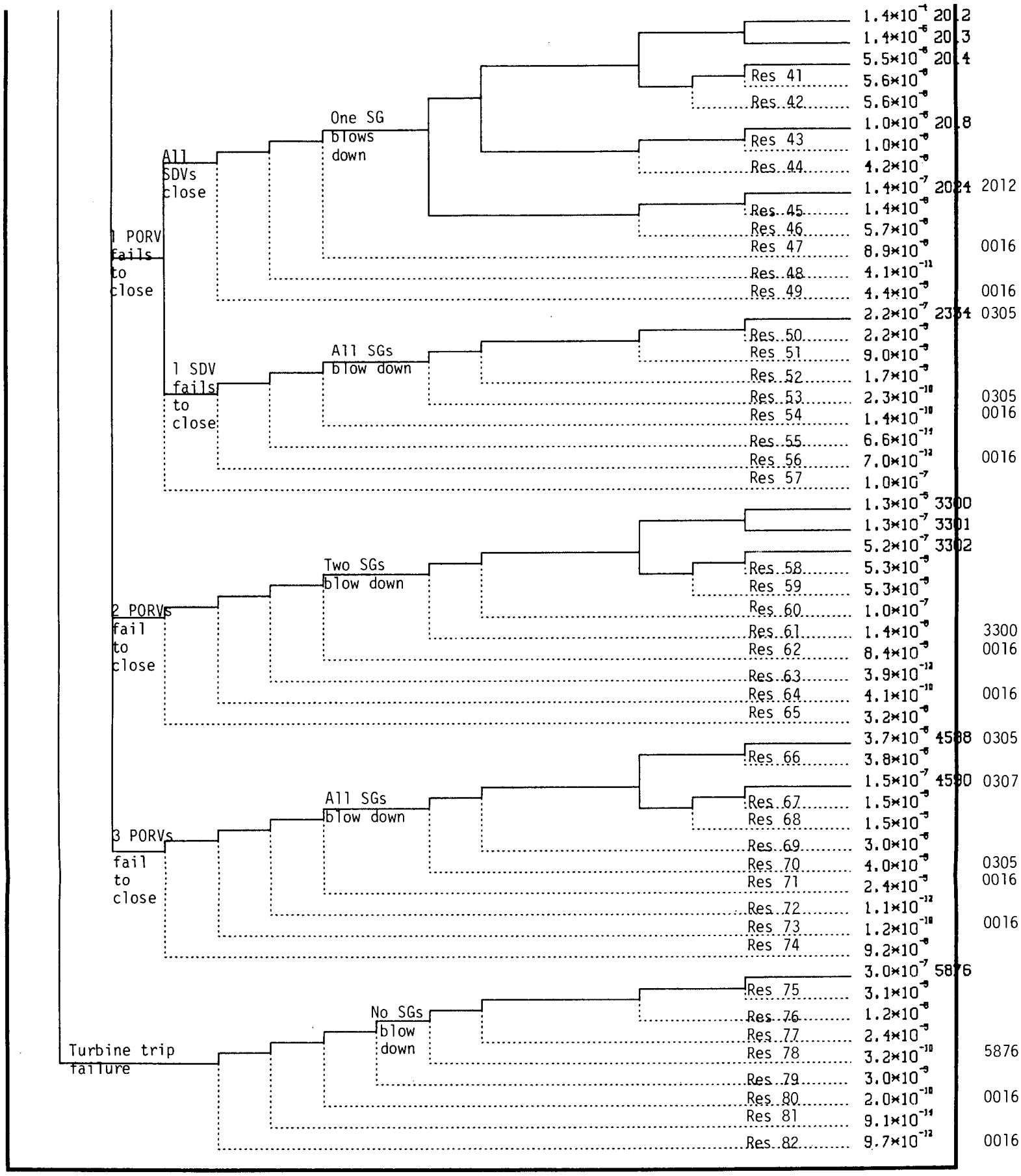

Figure 3.10. Event tree for small-break LOCA at full power.

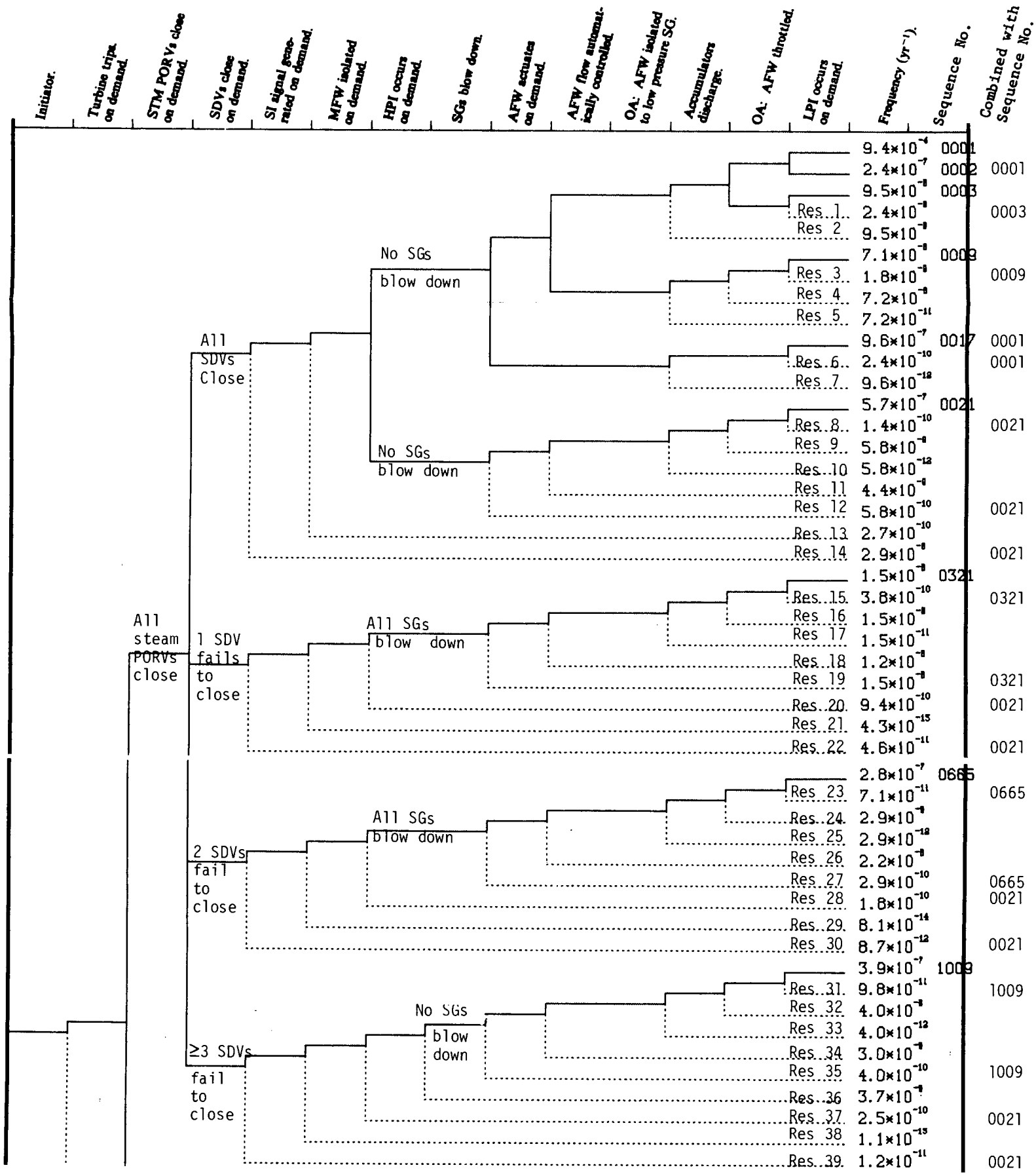
Initiator.
Turbine trips on demand.
STM PORVs close on demand.
SDVs close on demand.
SI signal generated on demand.
MFW isolated on demand.
HPI occurs on demand.
SGs blow down.
AFW actuates on demand.
AFW flow automatically controlled.
OA: AFW isolated to low pressure SG.
Accumulators discharge.
OA: AFW throttled.
LPI occurs on demand.
Frequency (yr⁻¹).
Sequence No.
Combined with Sequence No.
All steam PORVs close
All SDVs Close
No SGs blow down
No SGs blow down
1 SDV fails to close
All SGs blow down
2 SDVs fail to close
All SGs blow down
≥3 SDVs fail to close
No SGs blow down
9.4×10⁻⁴ 0001
2.4×10⁻⁷ 0002 0001
9.5×10⁻⁸ 0003
Res 1 2.4×10⁻⁸ 0003
Res 2 9.5×10⁻⁸
7.1×10⁻⁸ 0009
Res 3 1.8×10⁻⁸ 0009
Res 4 7.2×10⁻⁸
Res 5 7.2×10⁻¹¹
9.6×10⁻⁷ 0017 0001
Res 6 2.4×10⁻¹⁰ 0001
Res 7 9.6×10⁻¹²
5.7×10⁻⁷ 0021
Res 8 1.4×10⁻¹⁰ 0021
Res 9 5.8×10⁻⁸
Res 10 5.8×10⁻¹²
Res 11 4.4×10⁻⁸
Res 12 5.8×10⁻¹⁰ 0021
Res 13 2.7×10⁻¹⁰
Res 14 2.9×10⁻⁸ 0021
1.5×10⁻⁸ 0321
Res 15 3.8×10⁻¹⁰ 0321
Res 16 1.5×10⁻⁸
Res 17 1.5×10⁻¹¹
Res 18 1.2×10⁻⁸
Res 19 1.5×10⁻⁸ 0321
Res 20 9.4×10⁻¹⁰ 0021
Res 21 4.3×10⁻¹³
Res 22 4.6×10⁻¹¹ 0021
2.8×10⁻⁷ 0665
Res 23 7.1×10⁻¹¹ 0665
Res 24 2.9×10⁻⁸
Res 25 2.9×10⁻¹²
Res 26 2.2×10⁻⁸
Res 27 2.9×10⁻¹⁰ 0665
Res 28 1.8×10⁻¹⁰ 0021
Res 29 8.1×10⁻¹⁴
Res 30 8.7×10⁻¹² 0021
3.9×10⁻⁷ 1009
Res 31 9.8×10⁻¹¹ 1009
Res 32 4.0×10⁻⁸
Res 33 4.0×10⁻¹²
Res 34 3.0×10⁻⁸
Res 35 4.0×10⁻¹⁰ 1009
Res 36 3.7×10⁻⁸
Res 37 2.5×10⁻¹⁰ 0021
Res 38 1.1×10⁻¹³
Res 39 1.2×10⁻¹¹ 0021

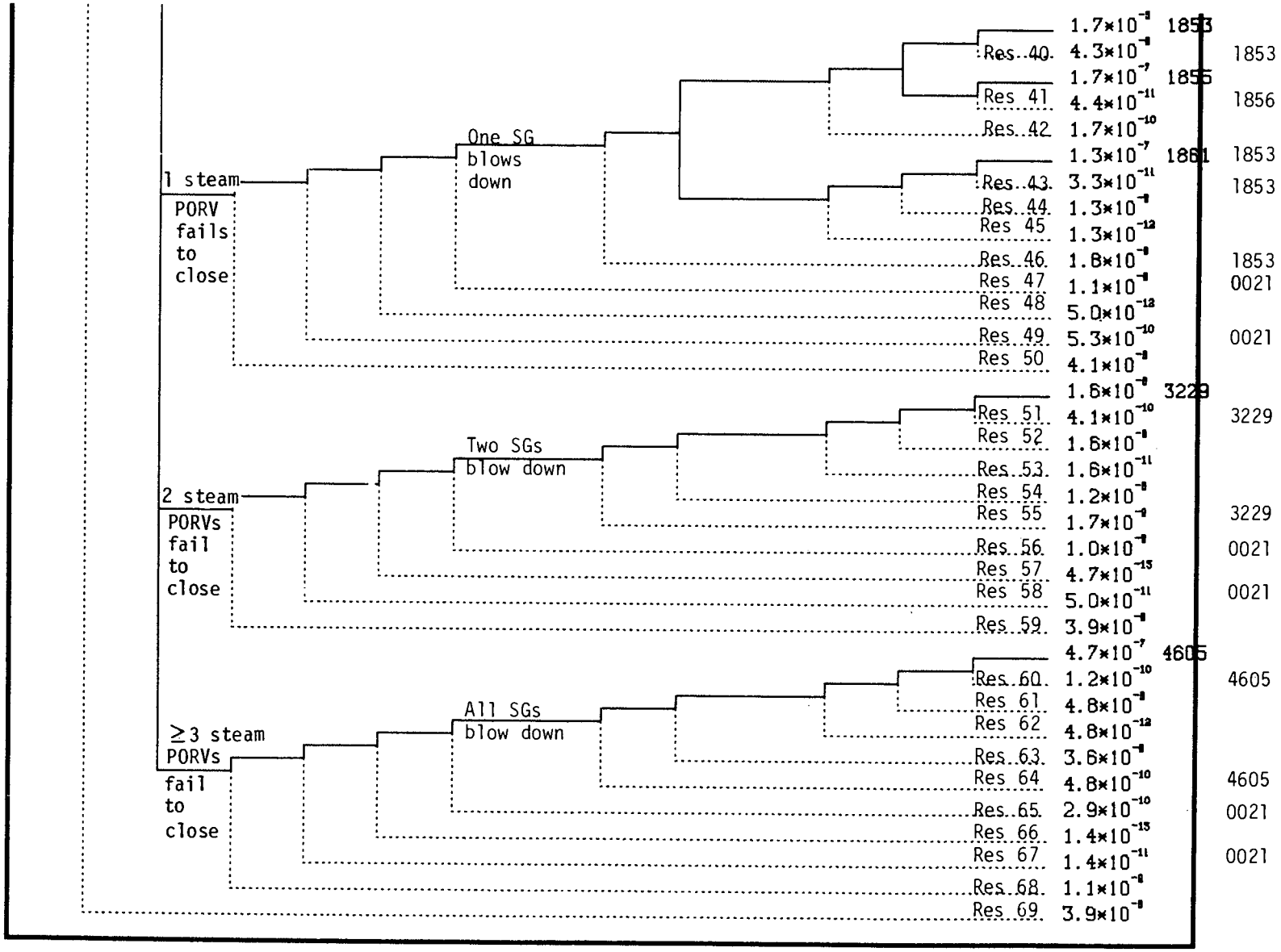

Figure 3.11. Event tree for medium-break LOCA at full power.

Table 3.13. Sequences to be analyzed for small- and medium-break[a]

Sequence No.[b]	Turbine Trips on Demand	STM PORVs Close on Demand	SDVs Close on Demand	MFW Runs Back and Isolates on Demand	HPI Occurs on Demand	SGs Blow Down	AFW Automatically Controlled	OA: AFW Isolates to LP SG	OA: Break Not Isolated[c]	Charging Flow Runs Back[c]	OA: AFW Throttled	Frequency (yr^{-1})
Small-Break LOCA												
1.1 (0001)	Trips	All close	All close	Runs back and isolates	HPI occurs	No SGs blow down	Automatically controlled	NA[d]	Fails to isolate break	Runs back as required	Throttles prior to SG high-level alarm	7.5E−3
1.2 (0002)	Trips	All close	All close	Runs back and isolates	HPI occurs	No SGs blow down	Automatically controlled	NA	Fails to isolate break	Runs back as required	Fails to throttle	7.5E−5
1.3 (0007)	Trips	All close	All close	Runs back and isolates	HPI occurs	No SGs blow down	Overfeeds	NA	Fails to isolated break	Runs back as required	Throttles prior to SG high-level alarm	5.6E−5
1.4 (0008)	Trips	All close	All close	Runs back and isolates	HPI occurs	No SGs blow down	Overfeeds	NA	Fails to isolate break	Runs back as required	Fails to throttle	5.7E−7
1.5 (0305)	Trips	All close	One fails to close	Runs back and isolates	HPI occurs	All SGs blow down	Automatically controlled	NA	Fails to isolate break	Runs back as required	Throttles prior to SG high-level alarm	1.6E−5
1.6 (0627)	Trips	All close	Two fail to close	Runs back and isolates	HPI occurs	All SGs blow down	Automatically controlled	NA	Fails to isolate break	Runs back as required	Throttles prior to SG high-level alarm	2.2E−6
1.7 (0949)	(Included in Sequence 1.8)											
1.8 (0949)	Trips	All close	> Three fail to close	Runs back and isolates	HPI occurs	All SGs blow down for 30 min	Automatically controlled	NA	Fails to isolate break	Runs back as required	Throttles prior to SG high-level alarm	3.1E−6
1.9 (2012)	Trips	One fails to close	All close	Runs back and isolates	HPI occurs	One SG blows down	Automatically controlled	NA	Fails to isolate break	Runs back as required	Throttles prior to SG high level alarm	1.4E−4
1.10 (2013)	Trips	One fails to close	All close	Runs back and isolates	HPI occurs	One SG blows down	Automatically controlled	NA	Fails to isolate break	Runs back as required	Fails to throttle	1.4E−6
1.11 (2018)	Trips	One fails to close	All close	Runs back and isolates	HPI occurs	One SG blows down	Overfeeds	NA	Fails to isolate break	Runs back as required	Throttles prior to SG high-level alarm	1.0E−6

Table 3.13 (Continued)

Sequence No.[b]	Turbine Trips on Demand	STM PORVs Close on Demand	SDVs Close on Demand	MFW Runs Back and Isolates on Demand	HPI Occurs on Demand	SGs Blow Down	AFW Automatically Controlled	OA: AFW Isolates to LP SG	OA: Break Not Isolated[c]	Charging Flow Runs Back[c]	OA: AFW Throttled	Frequency (yr^{-1})
Small-Break LOCA (Continued)												
1.12 (3300)	Trips	Two fail to close	All close	Runs back and isolates	HPI occurs	Two SGs blow down	Automatically controlled	NA	Fails to isolate break	Runs back as required	Throttles prior to SG high-level alarm	1.3E−5
1.13 (0001)	(Included in Sequence 1.1)[e]											
1.14 (0002)	(Included in Sequence 1.2)[e]											
1.15 (0007)	(Included in Sequence 1.3)[e]											
1.16 (0305)	(Included in Sequence 1.5)[e]											
1.17 (0001)	(Included in Sequence 1.1)[e]											
1.18 (0001)	(Included in Sequence 1.1)[e]											
1.19 (0016)	Trips	All close	All close	Runs back and isolates	Fails to occur	No SGs blow down	Automatically controlled	NA	Fails to isolate break	Runs back as required	Throttles prior to SG high-level alarm	5.0E−6
1.20 (0306)	Trips	All close	All close	Runs back and isolates	HPI occurs	All SGs blow down	Automatically controlled	NA	Fails to isolate break	Runs back as required	Fails to throttle	1.2E−7
1.21 (3301)	Trips	Two fail to close	All close	Runs back and isolates	HPI occurs	Two SGs blow down	Automatically controlled	NA	Fails to isolate break	Runs back as required	Fails to throttle	1.3E−7
1.22 (5876)	Fails to trip	All close	All close	Runs back and isolates	HPI occurs	No SGs blow down	Automatically controlled	NA	Fails to isolate break	Runs back as required	Throttles prior to SG high-level alarm	3.0E−7
11.1 (0003)	Trips	All close	All close	Runs back and isolates	HPI occurs	No SGs blow down	Automatically controlled	NA	Isolates break	Runs back as required	Throttles prior to SG high-level alarm	3.0E−4
11.2 (0005)	Trips	All close	All close	Runs back and isolates	HPI occurs	No SGs blow down	Automatically controlled	NA	Isolates break	Fails to run back	Throttles prior to SG high-level alarm	3.0E−6
11.3 (0003)	(Included in Sequence 11.1)[e]											
11.4 (0005)	(Included in Sequence 11.2)[e]											

Table 3.13 (Continued)

Sequence No.[b]	Turbine Trips on Demand	STM PORVs Close on Demand	SDVs Close on Demand	MFW Runs Back and Isolates on Demand	HPI Occurs on Demand	SGs Blow Down	AFW Automatically Controlled	OA: AFW Isolates to LP SG	OA: Break Not Isolated[c]	Charging Flow Runs Back[c]	OA: AFW Throttled	Frequency (yr^{-1})
					Small-Break LOCA							
11.5 (0004)	Trips	All close	All close	Runs back and isolates	HPI occurs	No SGs blow down	Automatically controlled	NA	Isolates break	Runs back as required	Fails to throttle	3.0E−6
11.6 (0020)	Trips	All close	All close	Runs back and isolates	Fails to occurs	No SGs blow down	Automatically controlled	NA	Isolates break	Runs back as required	Throttles prior to SG high-level alarm	1.8E−7
11.7 (0307)	Trips	All close	One fails to close	Runs back and isolates	HPI occurs	All SGs blow down	Automatically controlled	NA	Isolates break	Runs back as required	Throttles prior to SG high-level alarm	7.2E−7
11.8 (2014)	Trips	One fails to close	All close	Runs back and isolates	HPI occurs	One SG blows down	Automatically controlled	NA	Isolates break	Runs back as required	Throttles prior to SG high-level alarm	5.5E−6
11.9 (3302)	Trips	Two fail to close	All close	Runs back and isolates	HPI occurs	Two SGs blow down	Automatically controlled	NA	Isolates break	Runs back as required	Throttles prior to SG high-level alarm	5.2E−7
11.10	Residual Group											9.4E−7
					Medium-Break LOCA							
2.1 (0001)	Trips	All close	All close	Runs back and isolates	HPI occurs	No SGs blow down	Automatically controlled	NA	–	–	Throttles prior to SG high-level alarm	9.4E−4
2.2 (0003)	Trips	All close	All close	Runs back and isolates	HPI occurs	No SGs blow down	Automatically controlled	NA	–	–	Fails to throttle	9.5E−6
2.3 (0009)	Trips	All close	All close	Runs back and isolates	HPI occurs	No SGs blow down	Overfeeds	NA	–	–	Throttles prior to SG high-level alarm	7.1E−6
2.4 (Res 4)	Trips	All close	All close	Runs back and isolates	HPI occurs	No SGs blow down	Overfeeds	NA	–	–	Fails to throttle	7.2E−8
2.5 (0321)	Trips	All close	One fails to close	Runs back and isolates	HPI occurs	All SGs blow down	Automatically controlled	NA	–	–	Throttles prior to SG high-level alarm	1.5E−6

Table 3.13 (Continued)

Sequence No.[b]	Turbine Trips on Demand	STM PORVs Close on Demand	SDVs Close on Demand	MFW Runs Back and Isolates on Demand	HPI Occurs on Demand	SGs Blow Down	AFW Automatically Controlled	OA: AFW Isolates to LP SG	OA: Break Not Isolated[c]	Charging Flow Runs Back[c]	OA: AFW Throttled	Frequency (yr^{-1})
Medium-Break LOCA (Continued)												
2.6 (0665)	Trips	All close	Two fail to close	Runs back and isolates	HPI occurs	All SGs blow down	Automatically controlled	NA	–	–	Throttles prior to SG high-level alarm	2.8E−7
2.7 (1009)	(Included in Sequence 2.8)											
2.8 (1009)	Trips	All close	> Three fail to close	Runs back and isolates	HPI occurs	All SGs blow down for 30 min	Automatically controlled	NA	–	–	Throttles prior to SG high-level alarm	3.9E−7
2.9 (1853)	Trips	All close	All close	Runs back and isolates	HPI occurs	One SG blows down	Automatically controlled	NA	–	–	Throttles prior to SG high-level alarm	1.7E−5
2.10 (1856)	Trips	All close	All close	Runs back and isolates	HPI occurs	One SG blows down	Automatically controlled	NA	–	–	Fails to throttle	1.7E−7
2.11 (3229)	Trips	All close	All close	Runs back and isolates	HPI occurs	Two SGs blow down	Automatically controlled	NA	–	–	Throttles prior to SG high-level alarm	1.6E−6
2.12 (4605)	Trips	All close	All close	Runs back and isolates	HPI occurs	All SGs blow down	Automatically controlled	NA	–	–	Throttles prior to SG high-level alarm	4.7E−7
2.13 (0021)	Trips	All close	All close	Runs back and isolates	Fails to occur	No SGs blow down	Automatically controlled	NA	–	–	Throttles prior to SG high-level alarm	6.2E−7
2.14	Residual Group											2.1E−7

[a]The branches entitled "SI Signal Generated on Demand," "AFW Actuates on Demand," "Accumulators Discharge," and "LPI Occurs on Demand" were successful in all sequences listed. Therefore, these headings do not appear in this table. There were other sequences for which not all of the branches were successful, but they did not survive the frequency screening. These sequences are included in the residual groups.

[b]During the analysis of sequences by Idaho National Engineering Laboratory (INEL), the LOCAs in which the break could not be isolated were identified as Sequence Series 11. The original sequence numbers are maintained here for easy cross reference.

[c]These headings apply only to small-break LOCAs and not to medium-break LOCAs.

[d]NA = not applicable.

[e]These sequences include the failure of one feedwater regulating valve which subsequently was found to have zero impact because of a feedwater pump trip.

3.5.8. Small-Break LOCA at Hot 0% Power

An initiating frequency of 8.01×10^{-4}/yr was used for this event based on the overall estimate for a small-break LOCA of 8.9×10^{-3}/yr and a factor of 0.09 to account for those occurrences at hot 0% power. The branch headings and probabilities for the event are shown in Table 3.14, and the resulting event tree is shown in Figure 3.12. Out of the nine sequences with frequencies of $\geqslant 10^{-7}$/yr (out of a total of 158 sequences), six sequences were identified for further analysis. These are shown in Table 3.15. The frequency associated with the residual group is 1.1×10^{-7}/yr.

3.5.9. Medium-Break LOCA at Hot 0% Power

The initiating frequency used for a medium-break LOCA at hot 0% power was 1.9×10^{-5}/yr, based on 1.9% operation at hot 0% power. The branch headings and probabilities for the event are presented in Table 3.14, and the resulting event tree is shown in Figure 3.13. Three sequences out of a total of 124 sequences survived the screening criterion of 10^{-7}/yr. Two of these were selected for thermal-hydraulic and fracture-mechanics analyses as shown in Table 3.15. The residual group frequency totals 6.5×10^{-9}/yr.

3.5.10. Tube Rupture

Event tree branches for a steam generator tube rupture initiating event were described in Section 3.4.8. A review of this tree revealed the sequence descriptions would be dominated by operator actions, which means that the timing of the operator actions would be very important. Thus it was felt that a series of tube rupture calculations would be more appropriate than an analysis of the event tree. This led to the identification of five tube rupture sequences, each of which represents a type of tube rupture event. These five sequences are described in Table 3.16. It should be noted that in the interest of bounding the consequences associated with the tube rupture sequences, all tube rupture calculations were performed from the hot 0% power (low decay heat) initial condition.

Comments on the five tube rupture sequences are as follows:

Sequence 10.1: This sequence is representative of the nominal tube rupture sequence. The frequency assigned to it is the tube rupture initiator frequency of 5×10^{-3}/yr identified in Appendix B.

Sequence 10.2: This sequence is identical to sequence 10.1, but the SDVs fail to close for 10 minutes after the subcooling requirement is met. For failure of any one of five valves to close on demand, Appendix B reports a frequency of 1.6×10^{-3}. This frequency is used to represent one or more SDVs failing to close. This gives a total frequency for this transient of 8×10^{-6}/yr.

Table 3.14. Branch probabilities for small- and medium-break LOCAs at hot 0% power[a]

Tree Heading	Branch	Branch Probability[b] Small-Break LOCA	Branch Probability[b] Medium-Break LOCA
SI signal generated on demand.	(1) SI signal is generated.	0.99997	
	(2) SI signal is not generated.	3×10^{-5}	
MFW isolated on demand.	(1) No line overfeeds.	0.99999	
	(2) One line overfeeds.[c]	9.0×10^{-6}	
	(3) Two lines overfeed.[c]	8.4×10^{-7}	
	(4) All three lines overfeed.[c]	8.1×10^{-8}	
HPI occurs on demand.	If SI signal is generated,		
	(1) HPI occurs.	0.99939	
	(2) HPI fails to occur.	6.1×10^{-4}	
	If SI signal is not generated,		
	(1) Operator manually starts HPI.	0.99	
	(2) Operator fails to start HPI.	1×10^{-2}	
AFW actuates on demand.	(1) AFW actuates.	0.999	
	(2) AFW does not actuate.	1×10^{-3}	
AFW flow automatically controlled.	(1) AFW flow is automatically controlled at nominal rate.	0.9925	
	(2) Flow control failure leads to abnormally high AFW flow rate (overfeeds).	7.5×10^{-3}	
Accumulators discharge.	(1) Accumulators discharge when required.	0.99999	
	(2) Accumulators fail to discharge.	1×10^{-5}	
OA: Break not isolated.[d]	(1) Break not isolatable or operator fails to isolate break.	0.9610	1.0
	(2) Operator isolates break.	3.9×10^{-2}	1.0
Charging flow runs back on demand.[d]	(1) Charging flow runs back as required (repressurization limited).	0.99	NA
	(2) Charging flow fails to run back (repressurization not limited).	1×10^{-2}	NA

Table 3.14 (Continued)

Tree Heading	Branch	Branch Probability[b] Small-Break LOCA	Branch Probability[b] Medium-Break LOCA
OA: AFW throttled.	If operator isolates AFW,		
	(1) Operator throttles AFW flow.	0.99	
	(2) Operator fails to throttle AFW flow.	1×10^{-2}	
	If operator fails to isolate AFW,		
	(1) Operator fails to throttle AFW flow.	1.0	
	(2) Operator throttles AFW flow.	0.0	
LPI occurs on demand.	If SI signal is generated,		
	(1) LPI occurs as required.	0.99975	
	(2) LPI fails to occur.	2.5×10^{-4}	
	If SI signal is not generated,		
	(1) Operator manually starts LPI.	0.99	
	(2) Operator fails to start LPI.	1×10^{-2}	
	If SI signal is not generated and if operator fails to start HPI,		
	(1) Operator fails to start LPI.	1.0	
	(2) Operator manually starts LPI.	0.0	

[a]Acronyms used in this table (listed in the order of their appearance) are: SI = safety injection, MFW = main feedwater, HPI = high-pressure injection, AFW = auxiliary feedwater, OA = operator action, LPI = low-pressure injection, and MFIV = main feedwater isolation valve.

[b]Probabilities centered between the two columns apply to both break sizes.

[c]Includes failure of MFW regulating valves to run back, failure of one or both MFW pumps to trip on high level in any SG, and failure of MFIVs to close on SI signal.

[d]These headings apply only to small-break LOCAs and not to medium-break LOCAs.

[e]NA = not applicable.

Sequence 10.3: In this sequence a pressurizer PORV is assumed to stick open for 10 minutes following the first opening. A value of 0.054 (0.027 for each valve as presented in Appendix B) is used as the frequency for either of two valves to fail to close once open. This gives a sequence frequency of $0.005 \times 0.054 = 3 \times 10^{-4}$/yr.

Sequence 10.4: There was some concern expressed by representatives of Carolina Power and Light Company that ORNL's representation of a typical tube rupture (sequence 10.1) was incorrect and that only one PORV lift might be more typical. To address the potential effects of the different assumptions, sequence 10.1 was analyzed without the second PORV lift. The frequency used for the sequence was the tube rupture initiating frequency of 5×10^{-3}/yr.

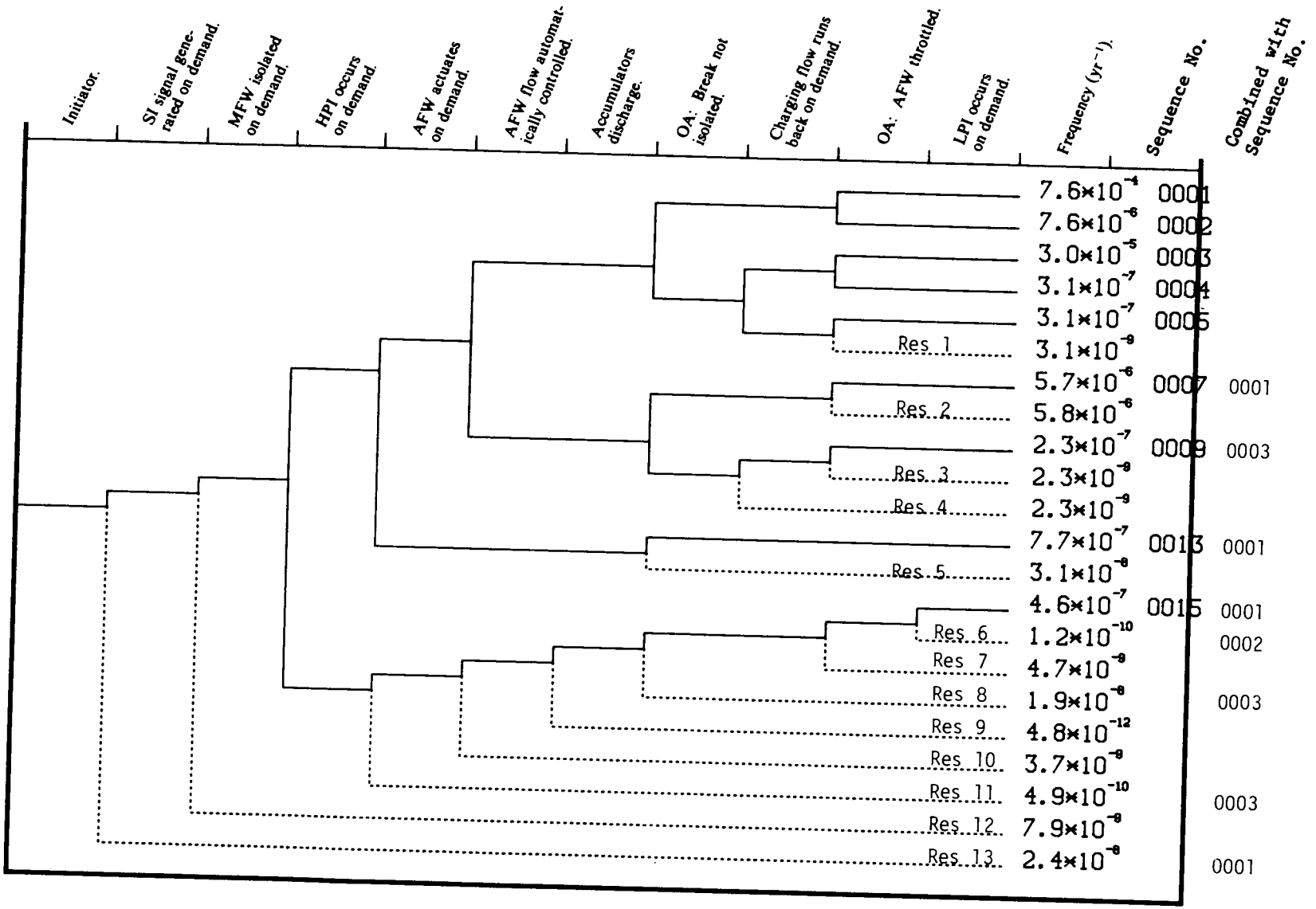

Figure 3.12. Event tree for small-break LOCA at hot 0% power.

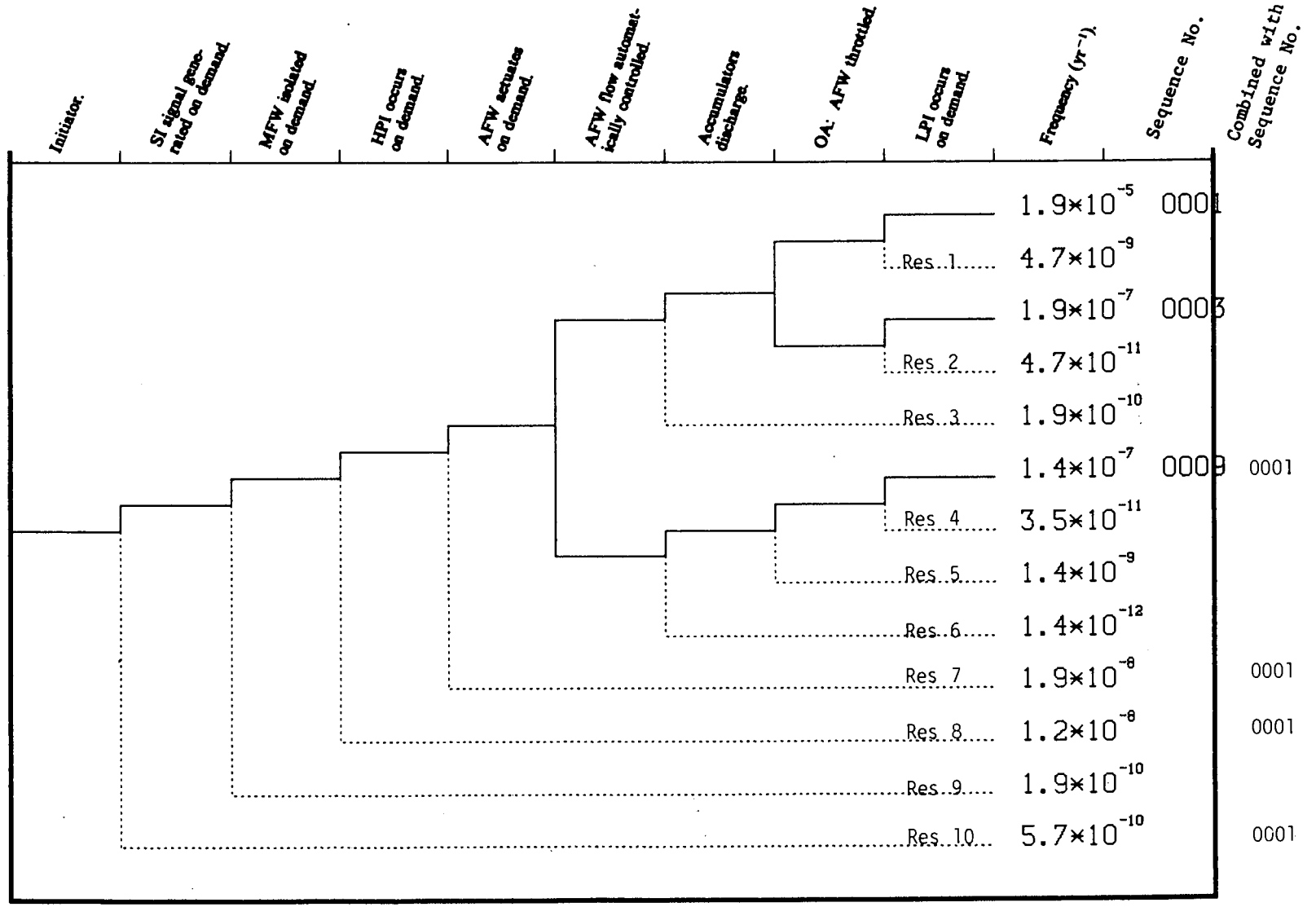

Figure 3.13. Event tree for medium-break LOCA at hot 0% power.

Table 3.15. Sequences to be analyzed for small- and medium-break LOCAs at hot 0% power

Sequence No.[a]	SI Signal Generated on Demand	MFW Isolated on Demand	HPI Occurs on Demand	AFW Actuates on Demand	AFW Automatically Controlled	Accumulator Discharge	OA: Break Not Isolated[b]	Charging Flow Runs Back	OA: AFW Throttled	LPI Occurs on Demand	Frequency (yr^{-1})
					Small-Break LOCA						
3.1 (0001)	Signal is generated	No line overfeeds	HPI occurs	AFW actuates	Automatically controlled	Not demanded	Fails to isolate break	Runback not required	Throttles prior to SG high-level alarm	LPI not required	7.7E−4
3.2 (0002)	Signal is generated	No line overfeeds	HPI occurs	AFW actuates	Automatically controlled	Not demanded	Fails to isolate break	Runback not required	Fails to throttle	LPI not required	7.6E−6
3.3	(Sequence not applicable)[c]										
12.1 (0005)	Signal is generated	No line overfeeds	HPI occurs	AFW actuates	Automatically controlled	Not demanded	Isolates break	Fails to run back	Throttles prior to SG high-level alarm	LPI not required	3.1E−7
12.2 (0004)	Signal is generated	No line overfeeds	HPI occurs	AFW actuates	Automatically controlled	Not demanded	Isolates break	Runs back as required	Fails to throttle	LPI not required	3.1E−7
12.3 (0009)	Signal is generated	No line overfeeds	HPI occurs	AFW actuates	Overfeeds	Not demanded	Isolates break	Runs back as required	Throttles prior to SG high-level alarm	LPI not required	2.5E−7
12.4 (0003)	Signal is generated	No line overfeeds	HPI occurs	AFW actuates	Automatically controlled	Not demanded	Isolates break	Runs back as required	Throttles prior to SG high-level alarm	LPI not required	3E−5
12.5	Residual Group										1.1E−7
					Medium-Break LOCA						
4.1 (0001)	Signal is generated	No line overfeeds	HPI occurs	AFW actuates	Automatically controlled	Discharges when required	-	-	Throttles prior to SG high-level alarm	LPI occurs as required	1.9E−5
4.2 (0003)	Signal is generated	No line overfeeds	HPI occurs	AFW actuates	Automatically controlled	Discharges when required	-	-	Fails to throttle	LPI occurs as required	1.9E−7
4.3	Residual Group										6.5E−9

[a]During the analysis of sequences by Idaho National Engineering Laboratory (INEL), the LOCAs in which the break could be isolated were identified as Sequence Series 3 and the LOCAs in which the break could not be isolated were identified as Sequence Series 12. The original sequence numbers are maintained here for easy cross reference.

[b]These headings apply only to small-break LOCAs and not to medium-break LOCAs.

[c]All SDVs are expected to remain closed under hot 0% power conditions; Sequence 3.3 covered the possibility of the SDVs failing to close, and thus it is not applicable to this series. It is included only for cross reference to the INEL series.

Table 3.16. Sequences to be analyzed for steam generator tube ruptures at hot 0% power[a]

Sequence No.	Description of Sequences	Frequency (yr^{-1})
10.1[b]	(1) If SIAS is generated, operator trips RCPs when RCS pressure reaches 1300 psig. (2) Operator throttles AFW flow to maintain 40% SG level. (3) At 500 seconds, operator closes affected SG MSIV. (4) At 10 minutes, operator fully opens three SDVs and cools primary system to 45°F. (Core outlet temperature and saturation temperature in the affected SG secondary are used to measure subcooling.) (5) When subcooling is attained, operator closes SDVs. (6) After waiting 260 seconds following Event 5, operator opens one PZR PORV to depressurize primary system. (7) When pressures of pressurizer and affected SG dome have equalized, operator closes PZR PORV. (8) After waiting 500 seconds following Event 7, operator opens a second PZR PORV to depressurize primary system to 1000 psia. (9) When depressurization is accomplished, operator closes the second PZR PORV. (10) After waiting 100 seconds following Event 8, operator secures HPI.	5×10^{-3}
10.2	Same as Sequence 10.1 except that SDVs fail to close for 10 minutes after subcooling has been achieved.	8×10^{-6}
10.3	Same as Sequence 10.1 except that PZR PORV sticks open for 10 minutes on first opening.	3×10^{-4}
10.4[b]	Same as Sequence 10.1 except that second PZR PORV fails to open and operator throttles HPI and charging flow when pressurizer set point level is attained.	5×10^{-3}
10.5	Same as Sequence 10.4 except that operator does not throttle flow.	5×10^{-4}

[a]Acronyms used in this table are: SIAS = safety injection actuation signal, RCP = reactor coolant pump, RCS = reactor coolant system, AFW = auxiliary feedwater, SG = steam generator, MSIV = main steam isolation valve, PZR PORV = pressurizer power-operated relief valve, and HPI = high-pressure injection.

[b]Sequences 10.1 and 10.4 are different representations of the same event. Therefore, in actuality, the sum of the frequencies for these two sequences should add up to 5×10^{-3}. However, in order to evaluate the potential for each separately, the total frequency for the event was assigned to each representation. This had no impact on the integrated results.

Sequence 10.5: In this sequence, HPI and charging flow are not throttled. This is an action performed by the operator in an attempt to stabilize primary and secondary system pressure. For screening purposes, a 0.1 failure frequency* was assigned to this operation, resulting in a frequency of 5×10^{-4}/yr for this sequence.

3.5.11. Loss of Main Feedwater

As described in Section 3.3.4, a loss of feedwater (LOFW) with subsequent auxiliary feedwater overfeed can result in sequences that potentially could be of concern with respect to PTS. Event sequences are similar to those identified for a reactor trip followed by main feedwater isolation (caused, for example, by a high steam generator level feedwater trip or safety injection), although the sequence frequencies are different from those in the reactor trip event tree. Six LOFW sequences have been identified. Utilizing a LOFW initiating event frequency of 0.3/yr and the branch probabilities given in Table 3.6 for "AFW automatically controlled," "Charging flow runs back on demand," and "AFW throttled" results in the LOFW-related sequences and frequencies given in Table 3.17.

3.5.12. Support System Failures

Of the support system failures postulated in Chapter 2 (Section 2.9.3), 12 were identified as being of potential concern with respect to PTS. These included loss of instrument air; loss of component cooling water; loss of service water; and several electrical bus failures, most of which involved the 4KV bus 3 or the dc power supplies. The plant responses to these support system failures are summarized in Table 3.18.

In this section, the selected support system failures are evaluated as initiators in potential PTS sequences. Initiator and sequence frequencies were then developed for those failures considered to be important. The potential PTS sequences associated with the selected support system initiators are discussed below.

Initiators 7, 8, and 9 (from Table 3.18), which involve the failure of vital instrument buses while tied into the 4KV bus 3 for maintenance, are effective loss of feedwater (LOFW) events. Main feedwater would isolate as a result of the SI actuation caused by the bus failure. The support system failure also results in charging flow runback. Sequences of potential PTS concern include an effective LOFW with initiation of AFW, successful or unsuccessful automatic control of AFW, and failure of the operator to manually throttle AFW.

Initiator 1, loss of the 125V dc panel A, also results in main feedwater isolation and SI actuation; however, charging pump flow remains fully operable. Sequences of potential PTS concern include those that would be initiated by an effective LOFW with the possibility of charging flow runback failure and failure of the operable pressurizer PORV to close.

---

*The feeling was that the failure frequency for this action should probably be lower than the 0.1 value used. However, an early review of the thermal hydraulics of this event revealed that a conservative frequency estimation for this sequence would not impact the overall frequency for a through-the-wall crack. Therefore, the 0.1 value was used.

Table 3.17. Sequences to be analyzed for loss of main feedwater

Sequence No.	AFW Actuates on Demand	AFW Automatically Controlled	Charging Flow Runs Back	OA: AFW Throttled	Frequency (yr^{-1})	Thermal Hydraulically Equivalent Reactor Trip Sequence
13.1	AFW actuates	Automatically controlled	Runs back as required	Fails to throttle	3E−3	9.49
13.2	AFW actuates	Automatically controlled	Fails to run back	Fails to throttle	3E−5	9.51
13.3	AFW actuates	Overfeeds	Runs back as required	Throttles prior to SG high-level alarm	2.1E−3	9.52
13.4	AFW actuates	Overfeeds	Runs back as required	Fails to throttle	2.1E−5	9.53
13.5	AFW actuates	Overfeeds	Fails to run back	Throttles prior to SG high-level alarm	2.1E−5	9.54
13.6	AFW actuates	Overfeeds	Fails to run back	Fails to throttle	2.1E−7	9.55

Initiators 2, 3, 10, and 12 would also result in main feedwater isolation and, except for initiator 3, would also result in the pressurizer PORVs failing closed. Modeling of the PTS sequences of potential concern includes considering the closure of the pressurizer safety relief valves (which would be demanded if charging flow runback failed) in those sequences where the support system initiator would result in inoperability of the PORVs.

The failure of 4KV buses 1 and 2 and associated diesel generator (initiator 6) results in a reactor trip initiator with operable primary and secondary side PORVs, closed SDVs, and operable MFW, AFW, MSIVs, SI, and charging flow. The expected frequency of this support system failure, though, is orders of magnitude smaller than that of an unspecified reactor trip.

Three of the support system initiators identified in Table 3.18 are considered to be benign from a PTS standpoint. Initiator 4, loss of dc buses A and B, could be modeled as a steam-line break initiator owing to the potential turbine trip failure induced. However, minimal cooldown would occur since the dc bus failure would also cause MSIV closure and HPI and AFW failure. Loss of 4KV buses 2 and 3 and associated diesels (initiator 5) is similar in that SI, AFW, and charging flow are inoperable while the secondary side is isolated. Failure of the component cooling water system (initiator 11) could result in an RCP-seal-failure-type LOCA via loss of seal water to the charging pumps. However, failure of all three charging pumps would be required, as well as failure of the operator to trip the RCPs. This event is bounded by other LOCA initiators.

Table 3.18. System/component responses to selected postulated support system failures[a]

No.	Postulated Failure	System/Component Response												
		Reactor	Turbine	RCPs	Pressurizer and PZR PORVs	SDVs	STM PORVs	MSIVs	MFW Isolation	MFW Runback	AFW	Safety Injection[b]	Charging Pump Flow	Letdown Flow
						Electrical System Failures								
1	125V dc panel A and associated 4KV buses 1 and 2 fail[c]	Trips	Trips	RCPs A and C off	PZR heaters off; auxiliary spray valve closed; RC-456 stays closed	Closed	Closed	Closed	Isolated	NA[d]	Actuates	Train B actuates	Operable	Isolated
2	125V dc panel B fails	Trips	Trips	Operable	PORVs fail closed; control heaters on	A-2 and B-3 closed	Operable	Closed	Isolated	NA	Actuates (only one motor-driven pump available)	Train A actuates	Operable	Isolated
3	125V dc auxiliary panel "DC" fails	Operable	Operable	Operable	RC-456 closed; auxiliary spray valve closed	A-1, B-1, and B-2 closed	Closed	Closed	Isolated	NA	Operable	Operable	Operable	Isolated
4	DC buses A and B fail	Trips	Immediate turbine trip fails	Cannot be be tripped off	PORVs closed; auxiliary spray valve closed; PZR heaters failed on	Closed	Closed	Closed	Isolated	NA	Not operable	HPI and LPI not operable	Operable	Operable
5	4KV buses 2 and 3 and associated D/G's fail	Trips	Trips	RCP C off; potential seal failure	RC-455C closed; block valves fail open; RC-456 eventually closes[e]	Closed	Eventual closure[e]	Eventual closure[e]	Loop 1 isolated, and eventual isolation of other MFW loops[e]	Operable	Not operable	HPI and LPI not operable	No flow; pumps fail	Isolated
6	4KV buses 1 and 2 and associated D/G's fail	Trips	Trips	RCPs A and C off	PZR heaters off	Closed	Operable	Operable	Loop 1 isolated	Operable	Operable	Operable	Operable, but discharge throttle valve fails open	Operable
7	4KV bus 3 with maintenance tie to instrument bus 2 fails[c]	Trips	Trips	Operable	RC-455C closed; block valves fail open	Closed	Closed[f]	Operable	Loop 2 isolated	Operable	Actuated	Actuated (only one SI pump available)	Low flow[g]	Isolated
8	4KV bus 3 with maintenance tie to instrument bus 3 fails[c]	Trips	Trips	Operable	PORVs closed	Closed	Closed[f]	Operable	Loop 3 isolated	Operable	Actuated	Actuated (only one SI pump available)	Low flow[g]	Isolated

Table 3.18 (Continued)

No.	Postulated Failure	System/Component Response												
		Reactor	Turbine	RCPs	Pressurizer and PZR PORVs	SDVs	STM PORVs	MSIVs	MFW Isolation	MFW Runback	AFW	Safety Injection[b]	Charging Pump Flow	Letdown Flow
						Electrical System Failures (Continued)								
9	4KV bus 3 with maintenance tie to instrument buses 2 and 3 fail[c]	Trips	Trips	Operable	PORVs closed	Closed	Closed[f]	Operable	Loop 2 and 3 isolated	Operable	Actuated	Actuated (only one SI pump available)	Low flow[g]	Isolated
						Instrument Air System								
10	Loss of instrument air	Operable	Operable	Operable	PORVs closed	Operable	Closed	Closed	Isolated	NA	Overfeed if turbine pump is actuated	Operable	Overfeed (loss of speed control and throttle valve open)	Isolated
						Component Cooling Water System								
11	Loss of CCW	Operable	Operable	Potential RCP	Operable	Operable	Operable	Operable	Operable	Operable	Operable	LPI and SI pump seal failure	Pump seal failure	Operable
						Service Water System								
12	Loss of SWS	Operable	Operable	Potential RCP bearing failure	PORVs closed[e]	Operable	Eventual closure[e]	Eventual closure[e]	Isolated	NA	Inoperable	SI pumps inoperable	Overfeed[e] (loss of speed control and throttle valve open)	Isolated[e]

[a]Acronyms used in this table are RCP = reactor coolant pump, PZR PORV = pressurizer power-operated relief valve, SDV = steam dump valve, STM PORV = steam power-operated relief valve, MSIV = main steam-line isolation valve, MFW = main feedwater, AFW = auxiliary feedwater, SI = safety injection, HPI = high-pressure injection, LPI = low-pressure injection, CCW = coolant water system; and SWS = service water system.

[b]Accumulator discharge remains operable under all failures postulated.

[c]Includes unavailability of associated diesel generator.

[d]NA = not applicable.

[e]Failure results in loss of SWS, which can fail the instrument air compressors.

[f]STM PORVs fail closed only if load reject signal from PM-447 exists.

[g]Manual recovery may be required.

Table 3.19 summarizes the support system initiators modeled and the sequences with estimated frequencies greater than 10^{-7}/yr. The frequencies of most of the PTS sequences that could be initiated by these support system failures are bounded by the frequencies for sequences initiated by LOFW and nonspecific reactor trip events. Of the support system failures evaluated, three sequences resulting from support system initiators could not be bounded in this manner. These sequences involve LOFW resulting from failure of the instrument air system caused by failure of the service water system. The sequences of concern require the normal recovery of service water but not the consequently failed instrument air, failure to throttle AFW, and, in one case, failure to manually run back charging flow. From a thermal-hydraulics standpoint, the sequences are approximated by reactor trip sequences 9.53 (for the sequences involving effective manual runback of charging flow) and 9.55 (for the remaining two sequences). These sequences have been designated as sequences 14.1 and 14.2, respectively, for analysis purposes (see footnotes e and f in Table 3.19).

3.5.13. Sequence Summary

The procedure described in this section to quantify and collapse the event-tree sequences produced 209 sequences for which thermal-hydraulic and fracture-mechanics analyses were performed. The number of sequences identified for analysis for each initiator and the frequencies of the associated residual groups are summarized in Table 3.20.

Table 3.19. PTS sequence modeling of support system initiators[a]

Support System Initiator				Sequences > 10^{-7}/yr	
No.[b]	Description	Estimated Frequency (yr^{-1})	Impact	Description	Frequency (yr^{-1})
1	Loss of 125V dc panel A and associated 4KV buses 1 and 2[c]	1.8E−3[d]	LOFW with AFW and SI actuated; SDVs closed; STM PORVs closed	Since no overcooling or pressurization is forced by the initiator beyond what would be typically demanded in resulting transients, the associated sequences are bounded in frequency by those associated with LOFW.	Bounded by LOFW sequences
2	Loss of 125V dc panel B	1.8E−3	LOFW with AFW actuated; PZR PORVs fail closed; STM PORVs operable; MSIVs closed	Same as No. 1	
3	Loss of 125V dc auxiliary panel "DC"	1.8E−3	LOFW with STM PORVs closed; one PZR PORV operable; MSIVs closed; AFW actuated	Same as No. 1	
6	Loss of 4KV buses 1 and 2 and associated D/G	3.5E−4	Reactor trip with STM PORVs and SDVs closed	Since no overcooling or pressurization is forced by the initiator beyond what would be typically demanded in resulting transients, the associated sequences are bounded in frequency by those of the reactor trip event tree.	Bounded by reactor trip sequences
7	Loss of 4KV bus 3 with maintenance tie to instrument bus 2[c]	4.1E−5	LOFW with AFW actuated; STM PORVs operable; SDVs closed; charging flow at minimum	Same as No. 1	
8	Loss of 4KV bus 3 with maintenance tie to instrument bus 3[c]	4.1E−5	Same as No. 7	Same as No. 1	
9	Loss of 4KV bus 3 with maintenance tie to instrument buses 2 and 3[c]	4.1E−6	Same as No. 7	Same as No. 1	

Table 3.19 (Continued)

Support System Initiator				Sequences > 10^{-7}/yr		
No.[b]	Description	Estimated Frequency (yr^{-1})	Impact		Description	Frequency (yr^{-1})
10	Instrument air system failure	1.0E−4	LOFW with STM PORVs closed; MSIVs closed; AFW auto-control failure; PZR PORVs closed; loss of charging flow control (overfeed)	10a.	Initiator with operator manually running back charging flow but failing to throttle AFW	Bounded by LOFW sequences
				10b.	Initiator with operator failing to manually run back charging flow but successfully throttling AFW	Bounded by LOFW sequences
				10c.	Initiator with operator failing to manually run back charging flow and failing to throttle AFW	Bounded by LOFW sequences
12	SWS	0.01	LOFW with AFW inoperable; STM PORVs closed; MSIVs closed; loss of charging flow control (overfeed)	Initiator with recovery of service water but not instrument air. Same three sequences as in No. 10 above, but with initiator frequency based on the SWS failure and a probability of 0.9 for recovery of SSW; that is:		
				12a.	Initiator with operator manually running back charging flow but failing to throttle AFW	8.1E−4[e]
				12b.	Initiator with operator failing to manually run back charging flow but successfully throttling AFW	9.0E−4[f]
				12c.	Initiator with operator failing to manually run back charging flow and failing to throttle AFW	9.0E−4[f]
				Note:	Without recovery of SWS, the event is not an overcooling transient.	

[a]Acronyms used in this table are: LOFW = loss of feedwater, AFW = auxiliary feedwater, SI = safety injection, SDV = steam dump valve, PZR PORV = pressurizer power-operated relief valve, STM PORV = steam power-operated relief valve; MSIV = main steam isolation valve; SWS = service water system.

[b]Failures 4, 5, and 11 listed in Table 3.18 are considered to be benign.

[c]Includes unavailability of associated diesel generators.

[d]Read: 1.8×10^{-3}.

[e]Initiator 12a is subsequently identified as Sequence 14.1.

[f]Initiators 12b and 12c are subsequently jointly identified as Sequence 14.2.

Table 3.20. Summary of event tree sequence collapse

Sequence Series No.	Initiator (Event Tree)	Number of Sequences: To Be Analyzed	Number of Sequences: In Event Tree	Grouped with Other Sequences[a]: Above 10^{-7}/yr	Grouped with Other Sequences[a]: Below 10^{-7}/yr	Residual Group Frequency (yr^{-1}): Before Analysis	Residual Group Frequency (yr^{-1}): After Analysis
1, 11	Small-break LOCA[b] at full power	22	6938	8	27	1.3×10^{-6}	9.4×10^{-7}
2	Medium-break LOCA at full power	12	6824	2	32	2.6×10^{-7}	2.1×10^{-7}
3, 12	Small-break LOCA at hot 0% power	5	158	4	4	2.8×10^{-7}	1.1×10^{-7}
4	Medium-break LOCA at hot 0% power	2	124	1	3	3.8×10^{-8}	6.5×10^{-9}
5	Small steam-line break at full power	29	923	6	28	9.1×10^{-6}	6.6×10^{-7}
6	Large steam-line break at full power	15	1763	10	41	4.6×10^{-7}	4.4×10^{-7}
7	Small steam-line break at hot 0% power	16	292	4	7	3.8×10^{-7}	2.5×10^{-7}
8	Large steam-line break at hot 0% power	9	508	0	4	2.3×10^{-7}	2.3×10^{-7}
9	Reactor trip	90	9773	54	174	3.1×10^{-6}	2.7×10^{-6}
10	Tube rupture	5	NA[c]	NA	NA	NA	NA
13	Loss of feedwater	6	NA	NA	NA	NA	NA
14	Support system failure	3	NA	NA	NA	NA	NA

[a]A screening frequency of 10^{-7}/yr was used to initially identify sequences which should be analyzed on an individual basis.
[b]LOCA = loss-of-coolant accident.
[c]NA = not applicable.

3.6. References

1. Generic Data Base for data and Models Chapter of the National Reliability Evaluation Program (NREP), EGG-EA-5887, June 1982.
2. Nuclear Power Plant Operating Experience — 1978, NUREG-0618, December 1979.
3. Nuclear Power Plant Operating Experience — 1979, NUREG/CR-1460, May 1981.
4. Nuclear Power Plant Operating Experience — 1980, NUREG/CR-2378, October 1982.
5. Operating Units Status Reports — Licensed Operating Reactors, NUREG-0020, published monthly.
6. Precursors to Potential Severe Core Damage Accidents: 1969-1979, A Status Report, NUREG/CR-2497, June 1982.
7. Precursors to Potential Severe Core Damage Accidents: 1980-1981, A Status Report, NUREG/CR-3591, July 1984.
8. Generic Evaluation of Feedwater Transients and Small Break Loss-of-Coolant for Accidents in Westinghouse-Designed Operating Plants, NUREG-0611, January 1980.
9. Mann, Schafer, and Singpurwalla, *Methods for Statistical Analysis of Reliability and Life Data*, John Wiley and Sons, New York, 1974.
10. Common Cause Fault Rates for Valves, NUREG/CR-2770, February 1983.
11. In-Plant Reliability Data Base for Nuclear Plant Components: The Valve Component, NUREG/CR-3154, November 1983.
12. H. B. Robinson Unit 2 Nuclear Station, Updated Final Safety Analysis Report.
13. Staff Report on the Generic Assessment of Feedwater Transients in Pressurized Water Reactors Design by the Babcock & Wilcox Company — NUREG-0560, May 1979.

Chapter 4

THERMAL-HYDRAULIC ANALYSES OF POTENTIAL OVERCOOLING TRANSIENTS FOR H. B. ROBINSON UNIT 2

C. D. Fletcher, C. B. Davis, and D. M. Ogden

Idaho National Engineering Laboratory

L. B. LaMonica

Science Applications International Corporation

T. G. Theofanous

Purdue University

D. L. Selby

Oak Ridge National Laboratory

4. THERMAL-HYDRAULIC ANALYSES OF POTENTIAL OVERCOOLING TRANSIENTS FOR H. B. ROBINSON UNIT 2

4.1. Introduction

In Chapter 3 a large number of potential overcooling sequences at the H. B. Robinson Unit 2 nuclear power plant were identified as requiring thermal-hydraulic analyses in order to determine their importance relative to pressurized thermal shock of the HBR-2 pressure vessel. To perform detailed thermal-hydraulic analyses, Idaho National Engineering Laboratory (INEL) developed a RELAP5 computer model representation of HBR-2 which describes the the major flow paths for both the primary and the secondary systems of the plant, as well as the main steam and feed systems and important relief and safety valves. The model was quality-assured in several ways, including comparing the calculated results with measured plant data, and it is believed that the results obtained with it are realistic estimates of the plant behavior given the postulated transients and related equipment and operator action assumptions.

Because of the large number of overcooling sequences identified in Chapter 3, it was not practical to consider performing a full-scale RELAP5 calculation for each one. On the other hand, it was felt that some thermal-hydraulic data should be generated for each sequence, even those with relatively slow cooldown rates (less than 100°F per hour).* Therefore, the approach used was to select 13 representative sequences for detailed analysis and then to use the resulting data, either directly or in conjunction with a simplified RELAP model, to estimate the thermal-hydraulic characterisitics of the other sequences.

The selection of the 13 representative sequences is described in Section 4.2. For each one, a RELAP5 analysis of the system response was performed by INEL over a 2-hr period, as described in Section 4.3. Two factors were identified as requiring special attention: (1) mixing in the downcomer region, and (2) the heat-transfer coefficient at the surface of the reactor vessel wall in the downcomer region. These two characteristics were examined by Theophanous of Purdue University, and the results are presented in Section 4.4 and Appendix E.

Finally, the results of the analyses discussed in Sections 4.3 and 4.4 were used with the simplified RELAP model to estimate the thermal-hydraulic characteristics of those sequences for which detailed RELAP5 model calculations were not performed. The methodology used and the results obtained are presented in Section 4.5 and Appendix F.

4.2. Selection of Thirteen Transient Scenarios

The primary objective of the selection process was to identify sequences that would provide information on the impact of the initiating events, potential equipment failures, and operator actions on the primary system cooldown rate and pressure. As a result, many of the sequences chosen are low-frequency probability sequences.

---

*This is necessary since many of the events with slow cooldown rates have relatively high frequencies of occurrence. Although it is anticipated that high-frequency events with slow cooldown are less important than those low-frequency events with rapid cooldown, the relative risk of a through-the-wall crack must be determined.

4.2.1. Sequences Initiated by Small-Break LOCA at Full Power

In Table 3.13 of Chapter 3, 32 sequences initiated by small-break LOCAs at full power were identified for analysis (sequences 1.1-1.22 and 11.1-11.10). Of these, nine (sequences 1.7, 1.13-1.18 and 11.3-11.4) were found to be identical to other sequences in the table and were combined with those sequences. Thus, a total of 23 sequences remained for further evaluation.

The 23 sequences can be grouped into two classes: (1) one class in which the break was not isolated (the sequence 1 series) and (2) another in which the break was isolated (the sequence 11 series). Because the sequences represented by the first class could be readily analyzed with the simple model, no full-scale RELAP5 calculations were proposed for this class. For the second class, it was felt that isolation of a break early in the transient would terminate the event and result in cooldown of very little consequence. Thus only those sequences involving a late isolation of the break (beyond the 1-hr time frame) were of real concern. Again, these sequences could be handled reasonably well by the simple model and thus no full-scale calculations were proposed for this class. However, it was necessary to confirm our assumption concerning a break that was isolated early. This was accomplished by performing an independent full-scale calculation (not defined by any of the sequences) in which a break was isolated 10 min into the transient. A PZR PORV size break was chosen for this calculation, which both confirmed our assumption and provided other important information on the initial transient behavior of a small-break LOCA event under full-power conditions.

4.2.2. Sequences Initiated by Medium-Break LOCA at Full Power

Table 3.13 identifies 13 overcooling sequences for analysis under the category of medium-break LOCAs at full power. Since the potential for loop flow stagnation is very important for sequences in this class, it was determined that at least one full-scale RELAP5 calculation would be necessary to identify the flow conditions. The first step in defining the calculation was to establish which break size (see Section 3.3.6) would be used to represent the medium-break event. A break equivalent to that of a 2-1/2-in. line was identified as a condition which would lead to very early loop flow stagnation and thus very cold temperatures early in the transient. The pressure drop for this event, however, is sufficiently rapid to substantially reduce the potential for the generation of a through-the-wall crack. As a result, a break equivalent to that in a 2-in. line was considered. With a break of this size, the cooldown would be slower but the pressure drop would not be as rapid. In the end, since a decision could not be made as to which break size was the more severe in thermal-hydraulic nature, full-scope RELAP5 calculations were performed for both break sizes.

In addition to the above hot leg breaks, 2-in. and 2-1/2-in. cold leg breaks from full power were considered. It was determined that for the 2-1/2-in. break the system would depressurize rapidly and would behave as it would for the hot leg break. In the case of the 2-in. break, it was not clear that the same behavior would occur. As a result, a full-scope calculation was performed for the 2-in. cold leg break. However, this calculation yielded results that were very similar to those obtained for the 2-1/2-in. hot leg break; therefore, neither cold leg break is discussed further in this report. The results of the 2-1/2-in. cold leg break are, however, presented in the INEL report.[1]

4.2.3. Sequences Initiated by Small-Break LOCA at Hot 0% Power

Table 3.15 identifies seven sequences for the case of a small-break LOCA at hot 0% power. On the basis of calculations performed by Los Alamos National Laboratory for the Calvert Cliffs analysis, there was concern that a small-break LOCA at low decay heat could lead either to flow stagnation or to very low loop flow. Since the simpler model was not perceived as a good indicator of loop flow stagnation, it was necessary to address this question with a full-scale RELAP5 calculation. The actual sequence chosen for analysis was sequence 3.1, in which, except for the break, all equipment is functioning normally. It was felt that this sequence would provide the most information on potential loop flow stagnation. As in the case of the full-power calculation, a PZR PORV size break was assumed.

4.2.4. Sequences Initiated by Medium-Break LOCA at Hot 0% Power

Again it was felt that with a medium-break LOCA at hot 0% power the potential for very low loop flow in all three loops was great enough to justify a full-scale calculation. Three sequences from Table 3.15 were identified for analysis under this initiator. Sequence 4.1 was chosen for specific analysis since it was felt it would provide the most information on potential loop flow stagnation. Since break sizes equivalent to both a 2-in. and a 2-1/2-in. line were perceived to lead to rapid depressurization at hot 0% power, the calculation was performed only for the 2-1/2-in. break.

4.2.5. Sequences Initiated by Small Steam-Line Break at Full Power

No sequence for which a small steam-line break at full power was the initiator was identified as requiring a full-scale RELAP5 calculation. It was felt that the 25 sequences identified under this class (see Table 3.11) could be readily analyzed with the simpler model.

4.2.6. Sequences Initiated by Large Steam-Line Break at Full Power

Based on the thermal-hydraulic analyses performed for Calvert Cliffs Unit 1, it was felt that the sequences in which the initiator was a large steam-line break at full power could be addressed by the simpler thermal-hydraulic model. Thus, no full-scale RELAP5 calculations were performed for this event class, which, as shown in Table 3.11, includes 15 sequences.

4.2.7. Sequences Initiated by Small Steam-Line Break at Hot 0% Power

Sequences initiated by a small steam-line at hot 0% power were perceived as being important; therefore, it was felt that a full-scale calculation should be performed for at least one of the 16 sequences in this event class that survived the frequency screening process (see Table 3.9). Since it was anticipated that the most severe cooldown would be associated with sequence 7.4, it was chosen for the full-scale calculation.

4.2.8. Large Steam-Line Break at Hot 0% Power

Sequences initiated by a large steam-line break at hot 0% power were perceived as being potentially important. Two sequences (8.1 and 8.4) were chosen for full-scale RELAP5 calculations from the 10 sequences identified in Table 3.9. Sequence 8.1 involves the break by itself, i.e., all other components work properly, and 8.4 involves the break with the operator failing to isolate the flow of AFW to the break.

Another concern for analysis in this event class was the actual break size. A large steam-line break was defined to cover the range in size from ~ 1 ft^2 up to a full double-ended pipe break. The flow restrictors located on the steam lines were clearly identified as a mechanism for reducing the effective break size of a double-ended pipe break. However, the actual difference in cooldown between the sequence with the 1-ft^2 break and one with a break size limited by the flow restrictor was not known. Thus, sequence 8.1 was run with the 1-ft^2 break, and sequence 8.4 was run with the double-ended pipe break. It should be noted that the timing of the event was perceived to be such that both the break size effect and continued AFW flow effect could be isolated.

4.2.9. Sequences Initiated by Reactor Trip at Full Power

A very large number of sequences (104) survived the frequency screening of the full-power reactor trip tree (see Table 3.7). However, since many of these sequences are similar to sequences in other classes, only one full-scale calculation was identified as being necessary to provide a thermal-hydraulic benchmark analysis for this large class. This calculation covers what might be called a medium-size steam-line break.

Many of the sequences initiated by reactor trip include single or multiple SDV failures. The single SDV failure could be considered a small steam-line break. The failure of three SDVs would clearly be beyond the small-break size but not into the large-break size. Thus, a sequence was identified for a full-scale RELAP5 analysis which involved the failure of three SDVs to close. Sequence 9.14B was chosen for analysis. The option involving failure of the operator to isolate the break by closing the MSIVs was chosen since conditions following closure of the MSIVs can be easily determined with the simpler model.

4.2.10. Sequences Initiated by Steam Generator Tube Rupture

In Table 3.16, five tube rupture sequences were identified for analysis. Although, in general, the tube rupture sequences were not perceived by INEL to be important, the transient conditions of the tube rupture were complicated enough to warrant full-scale RELAP5 calculations. Also, since the effects of decay heat on the tube rupture event were not known, it was necessary to define tube rupture events both at full power and at hot 0% power.

The two cases defined did not involve the operator actions to isolate the affected steam generator and lower primary system pressure as specified by the operating procedures. An additional full-scope calculation was performed to determine the effect of these operator actions. The scenario produced was a very mild transient and is not covered in this report although the results are presented in the INEL report.[1]

4.2.11. Sequences Initiated by Loss of Feedwater

Loss-of-feedwater events (see Table 3.17) lead to AFW actuation and the potential cooldown associated with AFW flow. Since this type of event was perceived as a minor cooldown class, two bounding calculations were identified. The first calculation bounded those loss-of-feedwater sequences with subsequent AFW overfeed and can be described as follows:

(1) Both MFW pumps trip.

(2) The AFW pumps fail to start for 8 min.*

(3) AFW is supplied at the maximum flow rate to all three SGs.

(4) The AFW flow is stopped soon after carryover is observed in the main steam lines.

The second calculation addressed a potential feed-and-bleed situation and can be described as follows:

(1) Both MFW pumps trip.

(2) The AFW pumps fail to start.

(3) The operator uses HPI to feed cooler water to the primary system.

(4) The operator opens a PZR PORV to bleed water from the primary system.

4.2.12. Sequences Initiated by Support System Failures

Although two sequences involving support system failures were identified as requiring analyses (see Table 3.19, Footnotes e and f), full calculations were not performed for these sequences because they were covered by calculations for other sequences leading to the same results.

4.2.13. Summary

The 13 scenarios identified can be grouped under five categories: (1) a steam-line break (Scenarios 1-4), (2) runaway AFW (Scenario 5), (3) small-break LOCAs (Scenarios 6-10), (4) SG tube ruptures (Scenarios 11-12), or (5) loss of heat sink with primary feed-and-bleed recovery (Scenario 13).

A summary of the 13 transients is presented in Table 4.1. It should be noted that the assumed system failures and operator actions or inactions vary from scenario to scenario. These differences may represent significant deviations from plant procedures and may significantly affect the course of a transient. These specified deviations are explicitly listed with the individual scenario descriptions in Section 4.3.

---

*This allows for considerable reduction in primary-to-secondary heat transfer, and thus the potential for flow stagnation, followed by cooldown and possibly decreased downcomer fluid temperature.

Table 4.1. Summary of thirteen postulated overcooling transients[a]

Scenario Number	Initial Plant Condition	Initiating Event
	Steam-line breaks	
1	Hot 0% power	1.0-ft^2 break in main steam line
2	Hot 0% power	Double-ended main steam-line break
3	Hot 0% power	Stuck-open STM PORV
4	Full power	Three SDVs fail open
	Runaway feedwater	
5	Full power	Overfeed with auxiliary feedwater
	Small-break LOCAs	
6	Full power	2½-in. hot leg break
7	Full power	PZR PORV-size break
8	Hot 0% power	2½-in. hot leg break
9	Full power	2-in. hot leg break
10	Hot 0% power	PZR PORV-size break
	SG tube ruptures	
11	Hot 0% power	SG tube rupture
12	Full power	SG tube rupture
	Loss of heat sink	
13	Full power	Loss of heat sink with primary system feed-and-bleed recovery

[a]The acronyms used in this table (in order of their appearance) are: STM PORV = steam power-operated relief valve, SDV = steam dump valve, PZR PORV = pressurizer power-operated relief valve, and SG = steam generator.

4.3. RELAP5 Analyses of Selected Transient Scenarios

As noted in Section 4.1, Idaho National Engineering Laboratory (INEL) participated in the PTS study for HBR-2 by using their RELAP5 computer code to perform full-scale thermal-hydraulic analyses of each of the 13 postulated overcooling transient scenarios identified in Table 4.1 and by estimating the plant behavior for the remaining overcooling sequences on the basis of the results of the detailed calculations, either directly or by using the calculated data in a simpler RELAP thermal-hydraulic model. In this section, we summarize the results obtained by INEL for the detailed calculations, each of which covered a 2-hr transient period.* A separate report, published by INEL[1] describes in great detail both the model and the transient analyses performed. Because the thermal-hydraulic characteristics of the transients can result from complex intra-system cooling mechanisms and in many instances small differences in temperature can have significant effects on the fracture-mechanics analysis, a separate review of the RELAP5 analysis was also performed within the PTS study group. This review was carried out by Brookhaven National Laboratory (BNL) and is also published in a separate report.[2]

4.3.1. The RELAP5 Model

The RELAP5 model was generated by INEL with extensive interactions with the plant owner, Carolina Power and Light Company, and the plant vendor, Westinghouse Corporation. The noding diagrams for the primary coolant loops, reactor vessel, steam generators, and feedwater train and steam lines are presented in Figures 4.1, 4.2, 4.3, and 4.4, respectively. The development of the noding and control signals for each system is described in detail in Ref. 1.

Three initial-condition models, hot 0% power and "full" power at 2200 MW and 2300 MW, were required to analyze the 13 transients and the model checkout case. For each initial-condition model, a steady-state calculation was performed and compared with actual plant data (hot 0% power and 2200-MW full power) or with anticipated operating conditions (2300-MW full power).

The initial conditions for the hot 0% power steady state were representative of HBR-2 operating conditions at hot standby. Table 4.2 compares initial values of selected parameters from the RELAP5 model with desired initial conditions obtained from documents describing hot 0% power conditions for the plant. The core power of 8.29 MW corresponds to the decay heat power 100 hr after shutdown from full power. The RELAP5 initial conditions were obtained from a steady-state run that used control systems to represent the behavior of the primary pressure control and loop flow and the chemical

*The 2-hr transient period was chosen for several reasons. First, the calculations are very expensive and the analysis for a considerably longer duration would incur substantial costs. From this standpoint, the 2-hr analysis could be considered an initial calculation where transients requiring further analysis are identified. The second reason is that many people feel that any overcooling event would be recognized and terminated during a 2-hr diagnosis period. Although the authors would not totally agree with this statement, we would concur that for the great majority of transients there are several means of recovery in a 2-hr period. Thus, there is some legitimacy associated with limiting the analysis to 2 hours. However, one must be aware of potential transients for which recovery may be beyond the 2-hr period.

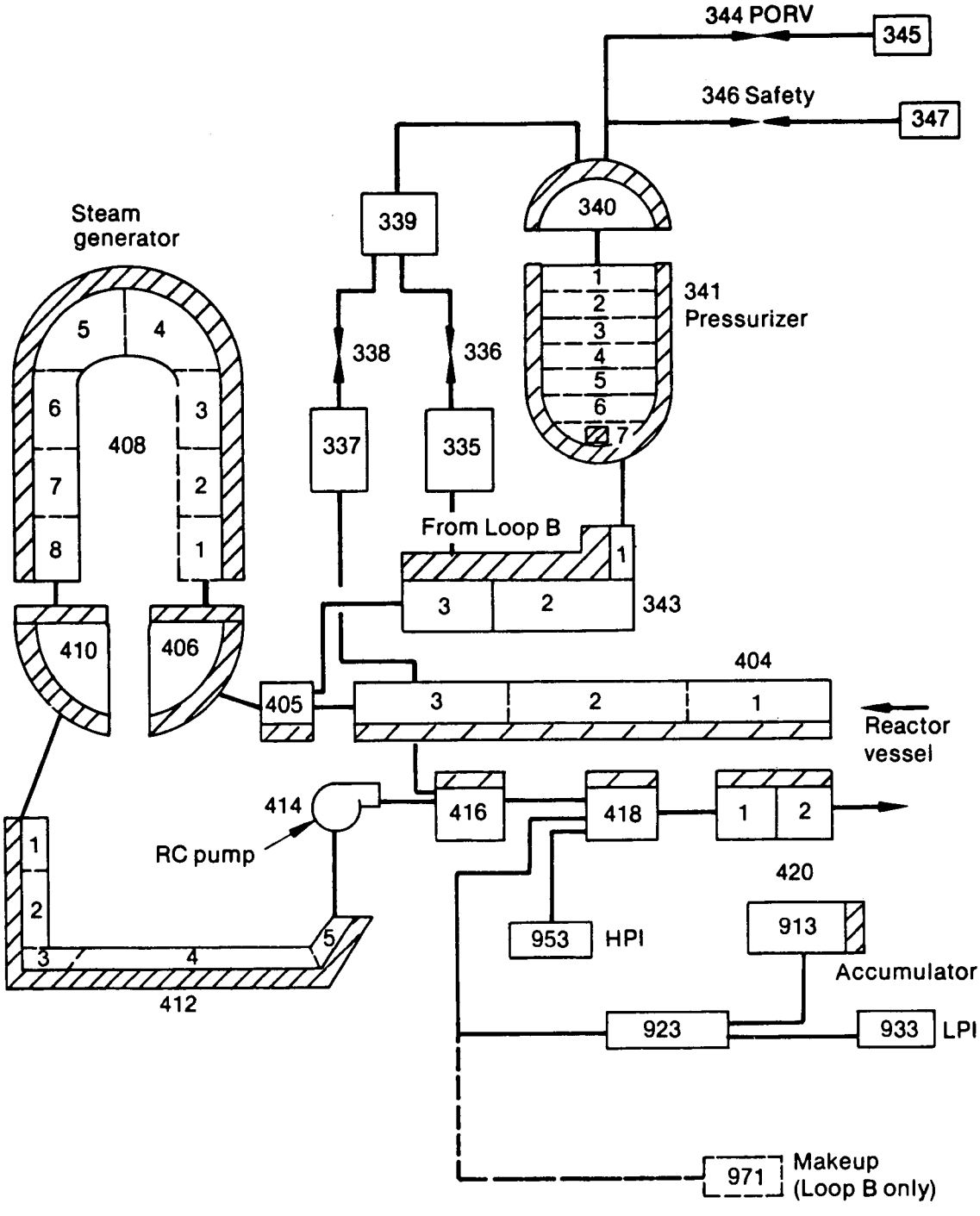

Figure 4.1. RELAP5 nodalization of primary coolant loops (loop C shown).

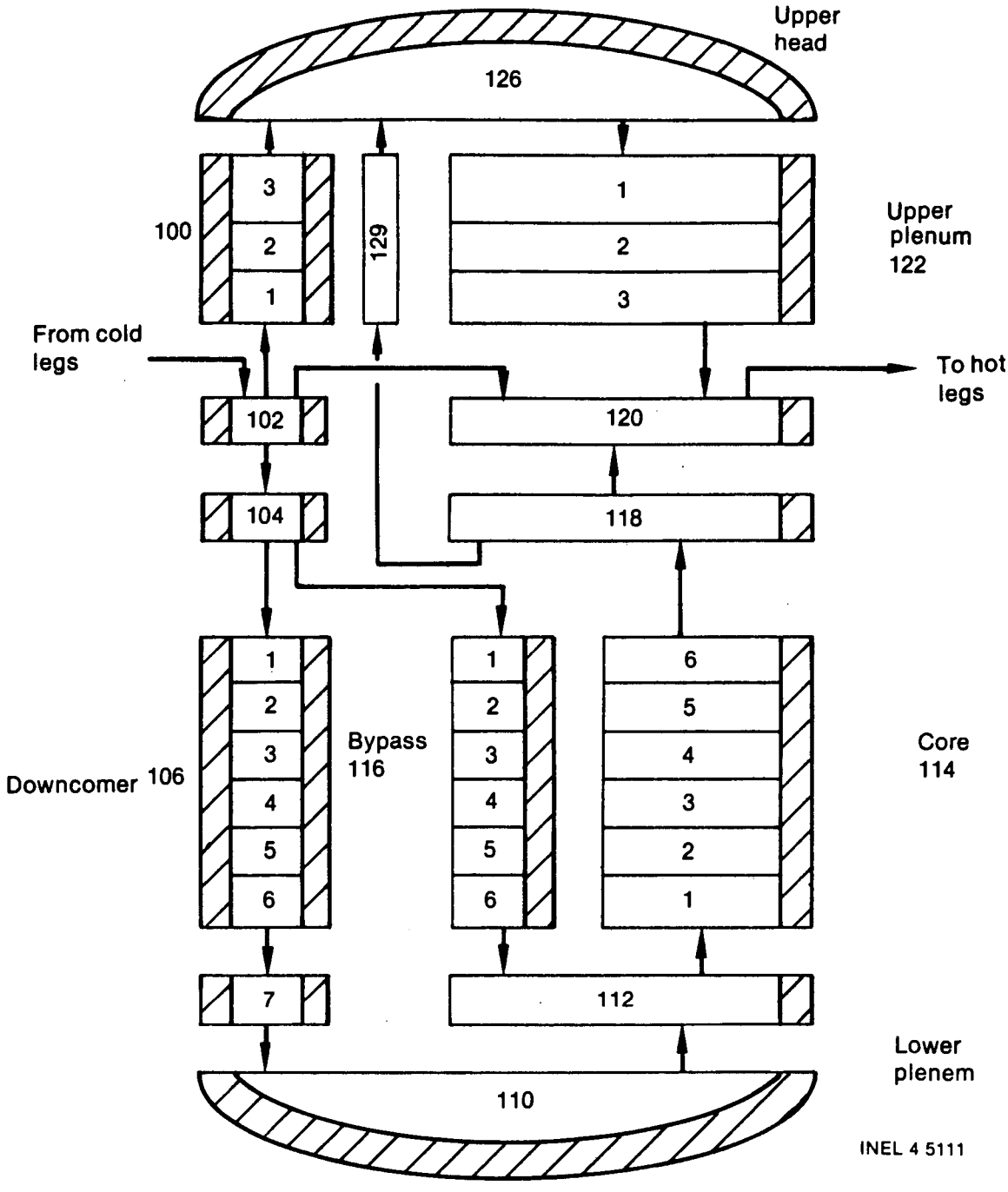

Figure 4.2. RELAP5 nodalization of reactor vessel.

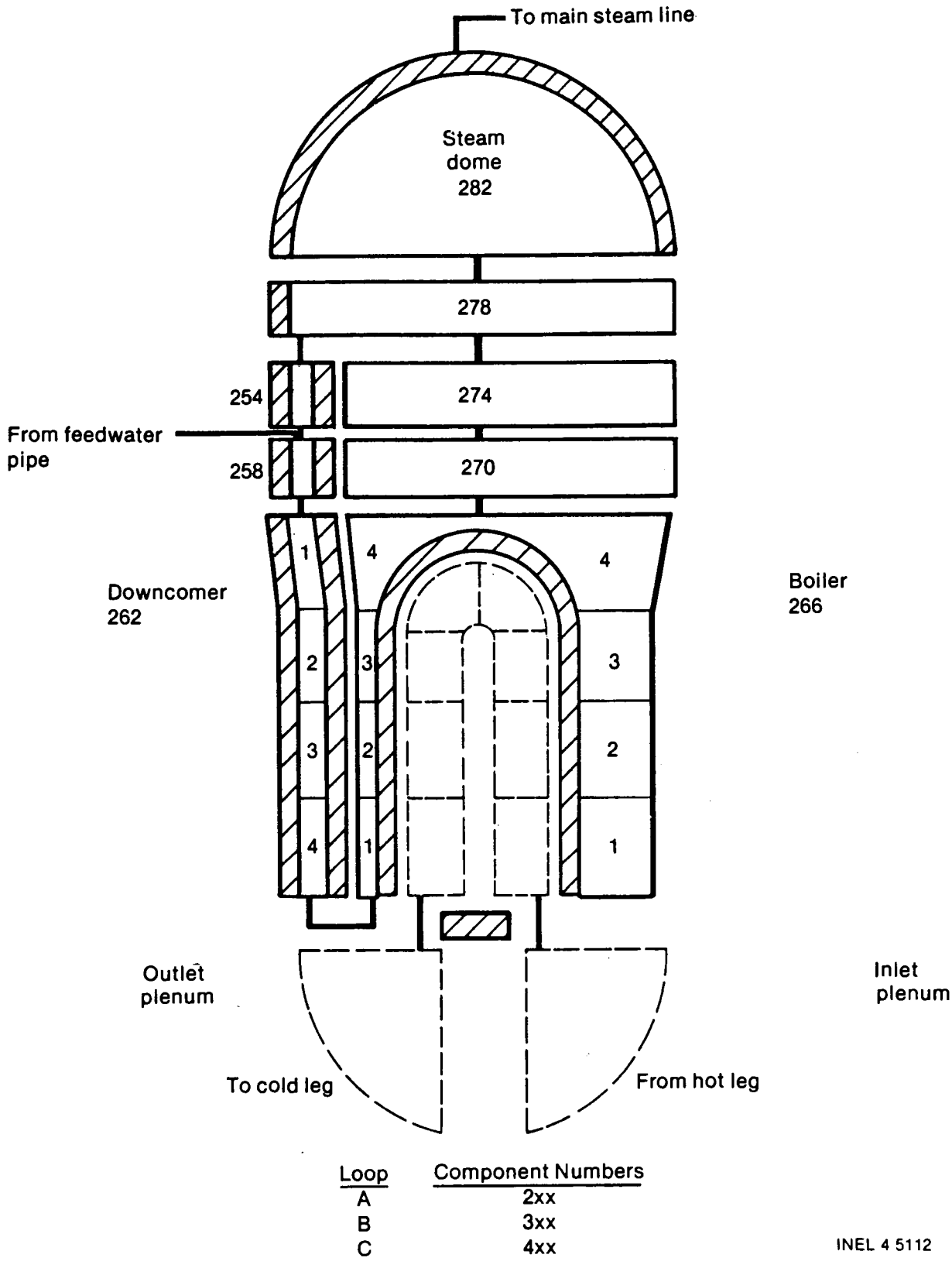

Figure 4.3. RELAP5 nodalization of steam generator (SG A shown).

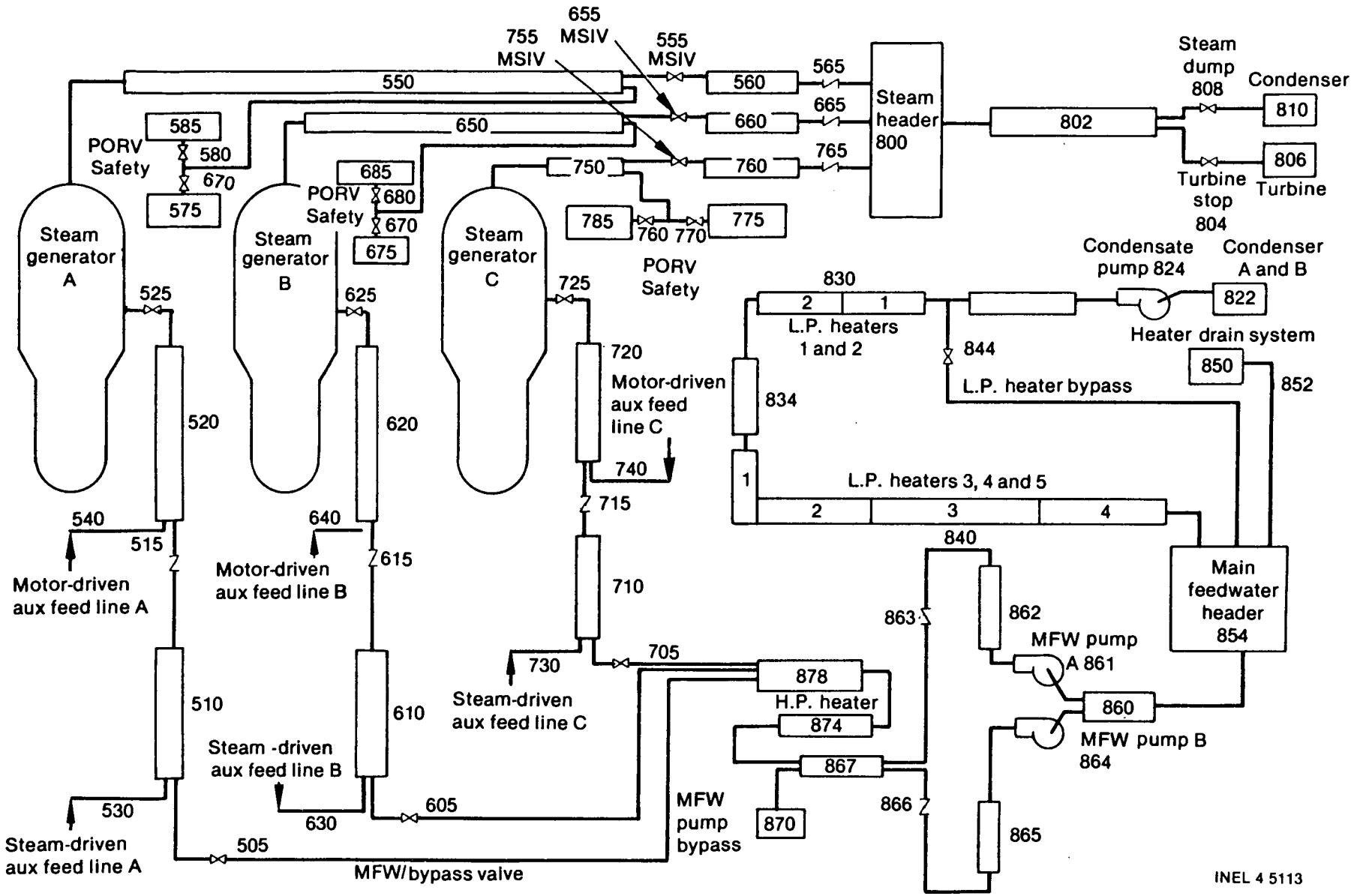

Figure 4.4. RELAP5 nodalization of feedwater train and steam lines.

Table 4.2. Hot 0% power initial conditions

Parameter	RELAP5	Desired
Core power, MW	8.29	8.29
Pressurizer pressure, MPa (psia)	15.5 (2250)	15.5 (2250)
Hot leg temperature, K (°F)	560.3 (548.9)	559 (547)
Cold leg temperature, K (°F)	560.04 (548.4)	559 (547)
Pressurizer level, %	23.6	24.4
Reactor coolant flow, kg/s (lbm/s)	12629 (27841.9)	12626.8 (27837)
Reactor coolant pump speed, rpm	1226	1190
Net makeup flow, gpm	0	0
Steam pressure, MPa (psia)	7.03 (1020)	7.03 (1020)
Steam generator level, %†	38.4	39
Steam flow (each), kg/s (lbm/s)	2.27 (5.0)	–*
Steam generator mass (each), kg (lbm)	57788 (127400)	54432-61689 (120000-136000)
Condenser temperature, K (°F)	299.8 (80)	–*
Feedwater temperature, K (°F)	299.8 (80)	–*
Heater drain flow, kg/s (lbm/s)	0.0	–*
Feedwater recirculation, gpm	1500	–*

*No data available.

†Percent of narrow range.

and volume control system. RELAP5 secondary initial conditions were obtained from the use of control systems that represented manual control of the feedwater bypass valve to maintain the level in the generators and action of the SDVs in steam pressure control (SPC) mode. The table shows that the actual initial conditions were generally in excellent agreement with the desired initial conditions.

The initial conditions for the 2300-MW steady state were representative of the operating conditions at the 100% rated core power. Table 4.3 compares initial values of the selected parameters from the RELAP5 model with desired initial conditions obtained from utility- and vendor-supplied documentation of revised precautions, limitations and set points documents, and other documents describing the initial conditions for the 2300-MW power level. The RELAP5 initial conditions were obtained from a steady-state run that used control systems to represent the behavior of the primary pressure control and loop flow, the chemical and volume control system, the secondary liquid level, and main feedwater and steam control valves. The table shows that the actual initial conditions were generally in excellent agreement with the desired initial conditions.

The initial conditions for the 2200-MW steady state were representative of operating conditions at the time of the plant trip transient which was used for the RELAP5 model checkout case. Table 4.4 compares initial values of selected parameters from the

Table 4.3. 2300-MW initial conditions

Parameter	RELAP5	Desired
Core power, MW	2300	2300
Pressurizer pressure, MPa (psia)	15.5 (2250)	15.5 (2250)
Hot leg temperature, K (°F)	591.4 (604.8)	591.4 (604.5)
Cold leg temperature, K (°F)	558.9 (546.3)	558.9 (546.3)
Pressurizer level, %	54.5	53.3
Reactor coolant flow, kg/s (lbm/s)	12726 (28055.5)	12726.8 (28056)
Reactor coolant pump speed, rpm	1247.1	1190
Net makeup flow, gpm	0.001	0
Steam pressure, MPa (psia)	5.5 (804)	5.7 (828)
Steam generator level, %†	53.7	52
Steam flow (each), kg/s (lbm/s)	425 (937)	424.2 (935.2)
Steam generator mass (each), kg (lbm)	44253 (97560)	42302 (93260)
Condenser temperature, K (°F)	312 (102)	312 (102)
Feedwater temperature, K (°F)	500.4 (441)	500.6 (441.5)
Heater drain flow, kg/s (lbm/s)	335.3 (783.2)	–*
Feedwater recirculation, gpm	0.0	–*

*No data available.

†Percent of narrow range.

Table 4.4. 2200-MW initial conditions

Parameter	RELAP5	Desired
Core power, MW	2192	2192
Pressurizer pressure, MPa (psia)	15.5 (2250)	15.62 (2265)
Hot leg temperature, K (°F)	585.6 (594.4)	583.2 (590)
Cold leg temperature, K (°F)	555.9 (541.0)	552.6 (535.0)
Pressurizer level, %	43	40
Reactor coolant flow, kg/s (lbm/s)	13275.3 (29267)	12458.3 (27466)
Reactor coolant pump speed, rpm	1244	1190
Net makeup flow, gpm	34.8	–*
Steam pressure, MPa (psia)	5.16 (748)	5.20 (754.7)
Steam generator level, %†	~52	~52
Steam flow (each), kg/s (lbm/s)	401.7 (885.7)	426.3 (939.8)
Steam generator mass (each), kg (lbm)	43650 (96232)	42302 (93260)
Condenser temperature, K (°F)	312 (102)	312 (102)
Feedwater temperature, K (°F)	498 (437)	498 (437)
Heater drain flow, kg/s (lbm/s)	353 (783)	–*
Feedwater recirculation, gpm	0.0	–*

*No data available.

†Percent of narrow range.

RELAP5 model with desired initial conditions obtained from utility-supplied startup data and other documents describing the operating conditions of the plant at the 2200-MW core power. The RELAP5 initial conditions were obtained from a steady-state run that used control systems to represent the behavior of the primary pressure control and loop flow and the chemical and volume control system. RELAP5 secondary system initial conditions were obtained from the use of control systems that represented manual control of the feedwater bypass valve to maintain level in the generators and action of the SDVs in the plant trip control (PTC) mode. The table shows that the actual initial conditions were generally in excellent agreement with the desired initial conditions.

Each of the transient scenarios, whether run at hot 0% power or full power conditions, shared common sets of system initial component states. These states are described in Table 4.5. The major differences between the hot 0% power and full power component states are found in the turbine, reactor control, and main feedwater systems. These variations are consistent with normal operations at hot 0% power and full power, respectively. Although all other systems are listed as operating on automatic, the system responses to disturbances may vary owing to different controller set points and controller operating modes used in the hot 0% power and full-power system conditions. Such differences were included in the RELAP5 steady-state models.

Assumed equipment failures and operator actions vary from scenario to scenario. The specific differences are discussed in the scenario descriptions in Sections 4.3.2 through 4.3.6.

4.3.2. Steam-Line Break Calculations

Steam-line breaks considered in the full-scale RELAP5 analyses ranged from small breaks equivalent to stuck-open valves to large pipe ruptures varying in size from ~0.1 m^2 (1.0 ft^2) up to a double-ended guillotine break. As noted earlier and indicated in Table 4.1, four scenarios were defined to investigate system response to this class of transient. The results of the thermal-hydraulic analyses for the four scenarios are described below.

4.3.2.1. Scenario 1: ~0.1-m^2 (1.0-ft^2) steam-line break at hot 0% power

Scenario 1 was initiated by a ~0.1-m^2 (1.0-ft^2) break in steam line A downstream of the flow restrictor and upstream of the main steam isolation valve (MSIV), with the plant initially in the hot 0% power condition. All automatic plant functions were assumed to respond normally. Three operator actions were also assumed: the first was to trip the reactor coolant pumps (RCPs) if the primary system pressure fell below 9.07 MPa (1315 psia), provided a safety injection actuation signal (SIAS) had been generated; the second was to stop auxiliary feedwater (AFW) flow to the unaffected SG when liquid carryover was observed in the main steam line; and the third was to stop AFW flow to the affected SG (SG A) 600 s after the transient initiation. These actions are summarized in Table 4.6.

Table 4.5. Common specifications for overcooling transient scenarios[a]

System	Condition	
	Hot 0% Power (Scenarios 1,2,3,8,9)	Full Power (Scenarios 4,5,6,7,10,11)
Turbine	Not latched, TSVs closed	Automatic control
Secondary PORV	Automatic control	Automatic control
SDVs	Automatic control	Automatic control
Charging system	Automatic control	Automatic control
Pressurizer	Automatic control	Automatic control
Engineered safety features	Automatic control	Automatic control
Primary PORV	Automatic control	Automatic control
Reactor control	Manual	Automatic control
MFW	1 condensate pump, 1 MFWP, manual control to 39% SG level	Automatic control
AFW	Automatic control	Automatic control
MSIVs	Open, automatic control	Open, automatic control
MFIVs	Closed, automatic control	Open, automatic control

[a]The acronyms used in this table (in the order of their appearance) are: TSV = turbine stop valve, PORV = power-operated relief valve, MFW = main feedwater, SDV = steam dump valve, MFWP = main feedwater pump, SG = steam generator, AFW = auxiliary feedwater, MSIV = main steam isolation valve, and MFIV = main feedwater isolation valve.

The break in steam line A was simulated by the insertion of a break flow path at the downstream end of component 550 (see Figure 4.4). After 600 s into the transient, all components upstream of the SGs, including AFW headers and valves and the main feedwater (MFW) train, were deleted from the model. These deletions were performed after all MFW and AFW flow to the SGs had ceased. The deletions decreased the computer memory requirements for the problem and thereby decreased run time.

The sequence of events that occurred during the Scenario 1 calculation is shown in Table 4.7. The transient was initiated by the insertion of a 0.093-m^2 (1.0-ft^2) break junction to atmosphere in steam line A (component 550). Approximately 100 ms after break initiation, a SIAS was generated by a high ΔP between the system header and steam line A. The SIAS shut down the operating MFW pump and activated the motor-driven AFW. Turbine-driven AFW initiation requires two-out-of-three low SG level indications and thus was not initiated in this scenario because only one SG is affected. High pressure injection (HPI) was initiated at 68.5 s when the primary system pressure dropped below the pump's shutoff head of 10.13 MPa (1470 psia). At 72.2 s, when the pressure dropped below 9.07 MPa (1315 psia), the RCPs were tripped. At 600 s, AFW flow was terminated as prescribed in the scenario description. By about 1300 s, heat

Table 4.6. Description of Scenario 1[a]

Plant initial state[b]

General description: Hot 0% power, 0% power after 100 hr of shutdown.

System status

Turbine: Not latched, TSVs closed
Secondary PORV: Automatic control
SDVs: Automatic control
Charging system: Automatic control
Pressurizer: Automatic control
Engineering safety features: Automatic control
PORVs: Automatic control
Reactor control: Manual
MFW: In bypass mode, manual control to provide 39% level in SGs; 1 condensate pump, 1 MFWP operating
AFW: Automatic control
MSIVs: Open, automatic control
MFIVs: Closed, automatic control

Transient initiator

A 1.0-ft^2 hole appears in steam line A outside containment upstream of the MSIV and downstream of the flow restrictor.

Additional failures[c]

None.

Operator reactions to reported information

1. If SIAS is generated, operator will trip the RCPs when RCS pressure reaches 1300 psig.
2. Operator will stop AFW flow to the unaffected SG when liquid carryover is observed in the main steam line.
3. Operator will stop AFW flow to the affected SG at 10 min or when carryover occurs.

[a]The acronyms used in this table (in the order of their appearance) are: TSV = turbine stop valve, PORV = power-operated relief valve, SDV = steam dump valve, MFW = main feedwater, SG = steam generator, MFWP = main feedwater pump, AFW = auxiliary feedwater, MSIV = main steam isolation valve, MFIV = main feedwater isolation valve, SIAS = safety injection actuation signal, RCP = reactor coolant pump, and RCS = reactor coolant system.

[b]Just prior to transient initiator.

[c]Operator failure or failure of equipment demanded during the transient.

Table 4.7. Sequence of events for Scenario 1[a]

Time (s)	Event
0	Steam line ruptures.
0.1	High steam line A ΔP; SIAS signal; MFW pump tripped off; motor-driven AFW tripped on.
20.3	Pressurizer low-level alarm.
43	Pressurizer indicated empty.
68.5	HPI initiated.
72.2	RCPs tripped.
587	Pressurizer level indication returned.
600	AFW tripped off.
1079	HPI shut off.
1300	Downcomer temperature starts to increase.
4889	PORVs began cycling.
5031	Pressurizer indicated full.
7200	End of calculation.

[a]The acronyms used in this table (in the order of their appearance) are: SIAS = safety injection actuation signal, MFW = main feedwater, AFW = auxiliary feedwater, HPI = high-pressure injection, RCP = reactor coolant pump, and PORV = power-operated relief valve.

transfer to SG A had degraded to the point where core decay power exceeded the SG's heat removal capability and the primary coolant temperatures started to increase. At 4889 s, the primary pressure had increased to the PORV set point and the valves began cycling.

Figure 4.5 presents the primary and secondary pressure responses. The pressure in SG A decreased continuously, reaching near atmospheric conditions (0.14 MPa, 20 psia) by 900 s. Both unaffected steam generators (SG B and SG C) experienced a slight decrease in pressure early in the transient when the primary cooldown caused them to become primary system heat sources. Once the RCPs were tripped, however, SG B and SG C were effectively isolated owing to primary loop stagnation and their pressures stabilized.

In the primary system, the pressure decreased as the break-induced heat transfer to the SG A peaked. As SG A emptied and the tubes became surrounded by high-quality

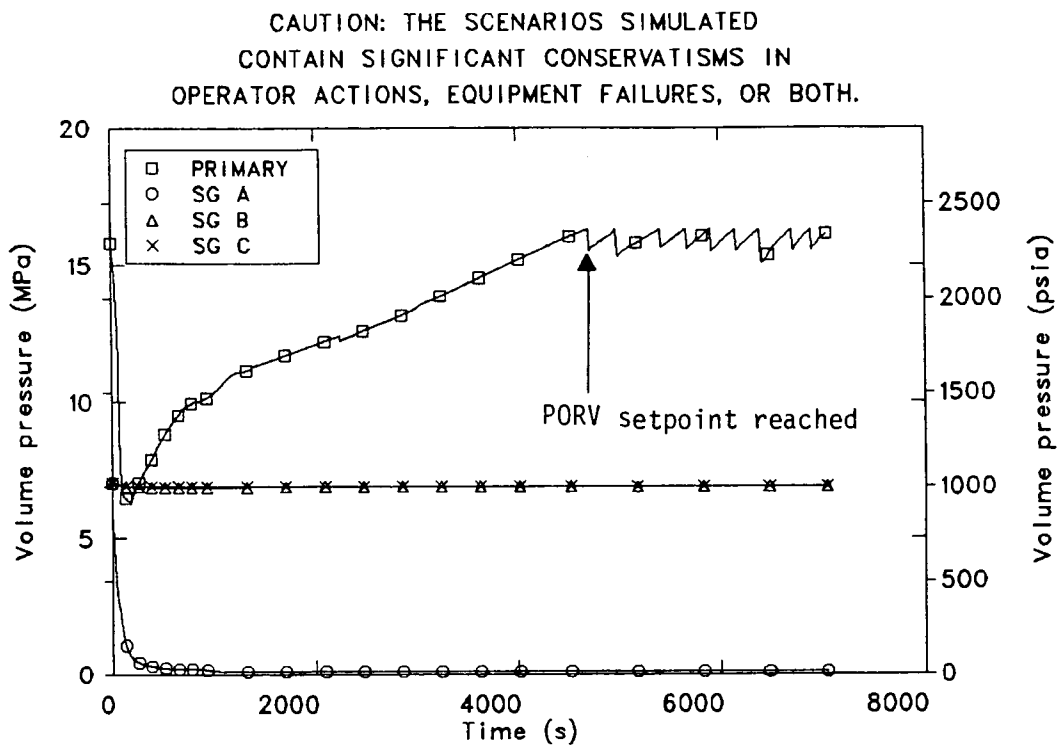

Figure 4.5. Scenario 1: Primary and secondary pressure profiles for steam-line break at hot 0% power.

fluid, heat transfer to the SG degraded and, with the RCPs tripped, the primary pressure stabilized around 6.55 MPa (950 psia). At 587 s, the pressurizer began refilling, and the primary pressure began to increase. Repressurization continued until, at 4889 s, the PORV set point of 16.2 MPa (2350 psia) was reached. The primary system pressure continued to oscillate around the set point for the remainder of the transient calculation.

Figure 4.6 compares all three cold leg temperatures and the downcomer temperature. The downcomer temperature was between the loop temperatures of the two unaffected SGs (B and C) and the temperature of SG A during the time the RCPs were operational and coasting down. Once loops B and C stagnated, the downcomer temperature converged on the SG A cold leg temperature, and the two temperatures remained closely coupled throughout the transient, reaching a minimum temperature of 396 K (253°F) at 1071 s and rising at a constant rate to the end of the calculation.

Figure 4.7 presents the heat transfer coefficient for the inner wall surface of the reactor vessel downcomer. The correlation used for the subcooled single-phase heat transfer occurring on the wall surface is the Dittus-Boelter correlation, which is dependent on flow and fluid conditions. In the Scenario 1 case, the flow was slightly decreased during a fluid heatup. There was more dependence on fluid properties than on flow, and the uncertainties were minimal in this extrapolation.

The principal uncertainty in this calculation is a consequence of approximating the reactor vessel as a one-dimensional system. The model by definition passes equal temperature

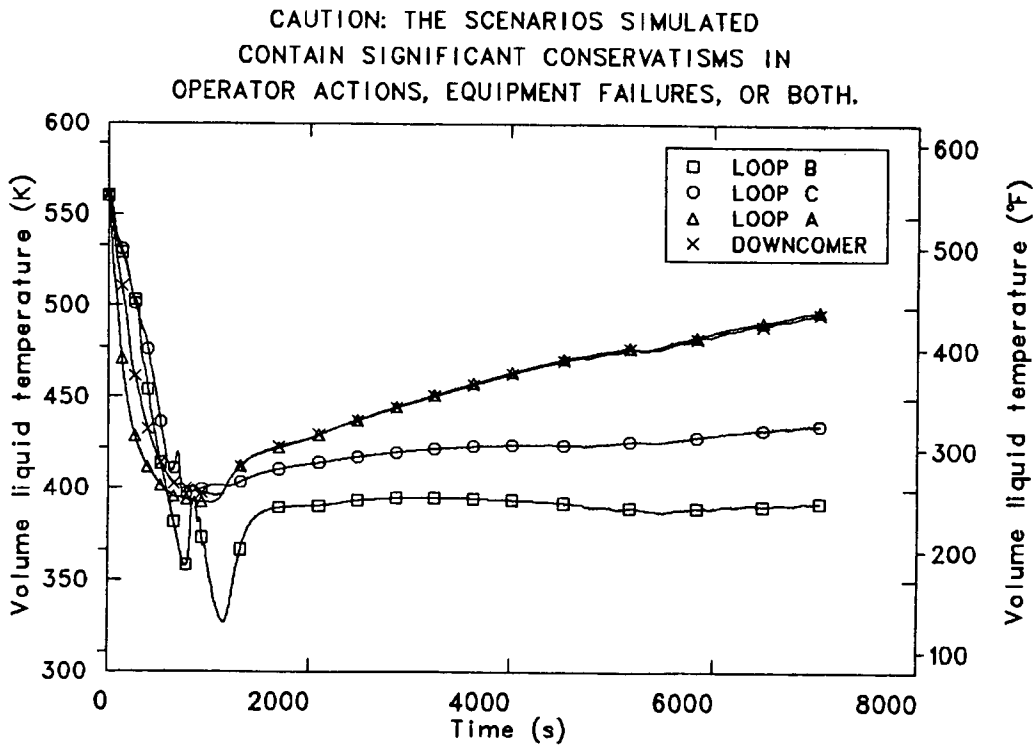

Figure 4.6. Scenario 1: Downcomer and cold leg temperature profiles for steam-line break at hot 0% power.

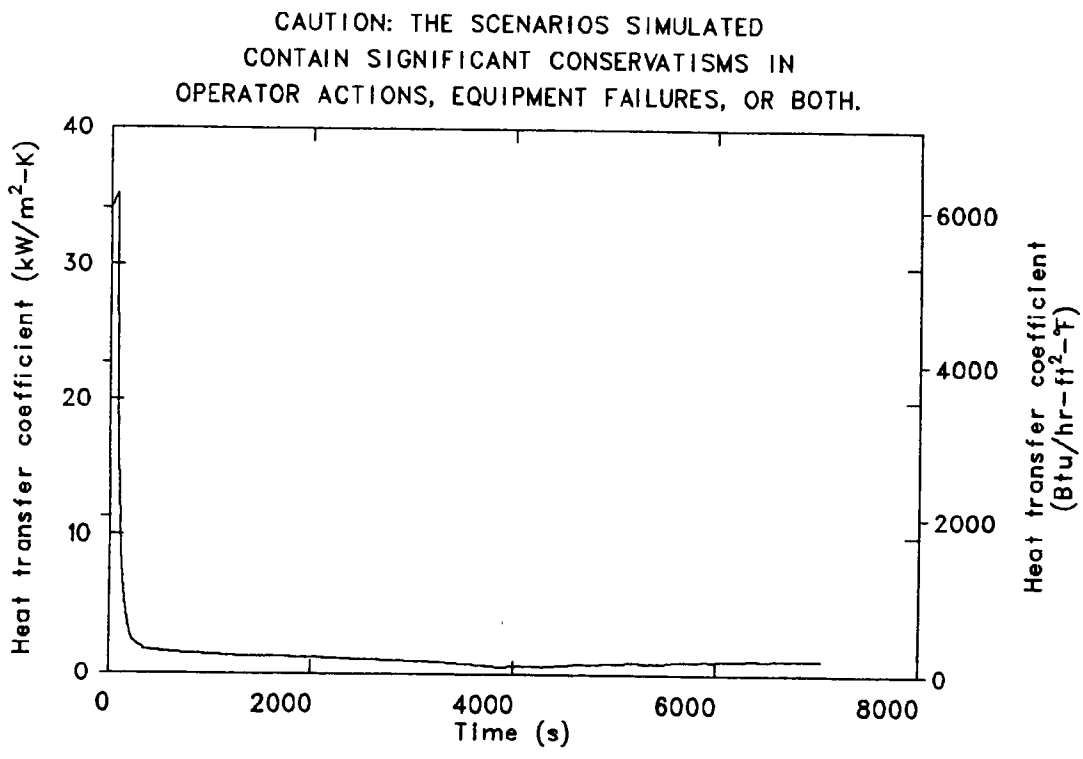

Figure 4.7. Scenario 1: Downcomer inner wall surface heat transfer coefficient for steam-line break at hot 0% power.

fluids to the hot legs. This is a limitation where significant loop asymmetric behavior is to be expected and where sufficient fluid mixing does not occur within the reactor vessel. For Scenario 1, there was significant asymmetry between the affected loop A and the unaffected loops B and C. It is not known, however, to what extent the cold leg fluids were mixed as they passed through the reactor vessel. Therefore, it was not possible to quantify the effect of this uncertainty on the parameters of interest. Qualitatively, little effect on the primary system pressure was expected. The unaffected hot legs would likely be warmer and the affected hot leg cooler than calculated. As a result, the unaffected loops would flow somewhat faster and the affected loop somewhat slower than was calculated.

The calculation of Scenario 1 led to the following conclusions:

(1) The peak primary pressure was the PORV set point 16.2 MPa (2350 psia), which occurred between 829 and 1467 s and continued to the end of the 2-hr transient.

(2) The minimum downcomer temperature reached was 396 K (253°F) at 1071 s into the transient.

(3) The minimum cold leg temperatures reached were: loop A, 396 K (254°F) at 778 s; loop B, 327 K (129°F) at 1141 s; and loop C, 392 K (246°F) at 1047 s.

The scenario developed into a continuing primary system cooldown until SG A was emptied; then the decay heat source in the core overwhelmed the heat removal capacity of the system, which had developed an asymmetric natural circulation flow condition. This heat imbalance turned the temperatures around and a primary system heatup commenced.

4.3.2.2. Scenario 2: Double-ended steam-line break at hot 0% power

Scenario 2 was initiated by a double-ended guillotine break [0.29-m^2 (3.1-ft^2)] in steam line A, downstream of the flow restrictor and upstream of the MSIV with the reactor at hot 0% power. All automatic plant functions were assumed to respond normally. The operators were assumed to trip the RCPs when the primary pressure fell below 9.07 MPa (1315 psia), provided a SIAS had been generated previously. In addition, the operators were assumed to fail to isolate the AFW flow to the affected SG. These requirements are summarized in Table 4.8.

The break in steam line A was simulated by the insertion of a break flow path in the downstream end of component 550 (see Figure 4.4) and the deletion of steam-line components 555, 560, and 565. Trips were altered to insure continuous AFW flow to SG A throughout the transient after the AFW was automatically actuated.

The sequence of events that occurred during Scenario 2 is shown in Table 4.9. The break that initiated the transient was a 0.29-m^2 (3.1-ft^2) junction to atmosphere in steam line A (component 550). Approximately 0.058 s after break initiation, a SIAS was generated by high ΔP in steam line A. The SIAS shut down the one operating MFW pump and activated the motor-driven AFW system. HPI flow into all three loops began at

Table 4.8. Description of Scenario 2[a]

Plant initial state[b]

General description: Hot 0% power, 0% power after 100 hr of shutdown.

System status

Turbine: Not latched, TSVs closed
Secondary PORV: Automatic control
SDVs: Automatic control
Charging system: Automatic control
Pressurizer: Automatic control
Engineering safety features: Automatic control
PORVs: Automatic control
Reactor control: Manual
MFW: In bypass mode, manual control to provide 39% level in SGs; 1 condensate pump, 1 MFWP operating
AFW: Automatic control
MSIVs: Open, automatic control
MFIVs: Closed, automatic control

Transient initiator

Full double-ended guillotine pipe break in steam line A upstream of the MSIV and downstream of the flow restrictor.

Additional failures[c]

Operator fails to isolate AFW to the affected SG.

Operator reactions to reported information

1. If SIAS is generated, operator will trip the RCPs when RCS pressure reaches 1300 psig.
2. Operator will stop AFW flow to the unaffected SG when liquid carryover is observed in the main steam line.

[a]The acronyms used in this table (in the order of their appearance) are: TSV = turbine stop valve, PORV = power-operated relief valve, SDV = steam dump valve, MFW = main feedwater, SG = steam generator, MFWP = main feedwater pump, AFW = auxiliary feedwater, MSIV = main steam isolation valve, MFIV = main feedwater isolation valve, SIAS = safety injection actuation signal, RCP = reactor coolant pump, and RCS = reactor coolant system.

[b]Just prior to transient initiator.

[c]Operator failure or failure of equipment demanded during the transient.

Table 4.9. Sequence of events for Scenario 2[a]

Time (s)	Event
0	Steam line ruptures.
0.05	High steam-line ΔP; SIAS signal; MFW pump tripped; motor-driven AFW initiated.
17	Pressurizer low-level alarm.
35	Pressurizer indicated empty.
50.5	HPI initiated.
53.05	RCPs tripped.
310	Pressurizer level returned.
1170	HPI flow stopped at shutoff head.
1300	Calculation terminated.
7200	End of extrapolation.

[a]The acronyms used in this table (in the order of their appearance) are: SIAS = safety injection actuation signal, MFW = main feedwater, AFW = auxiliary feedwater, HPI = high-pressure injection, and RCP = reactor coolant pump.

50.5 s, when the primary pressure had dropped below 10.13 MPa (1470 psia). HPI flow continued until 1464 s, when the primary system had repressurized above the pump's shutoff head. The RCPs were tripped at 53 s, when the primary system pressure had dropped below 9.07 MPa (1315 psia).

The pressure in SG A fell in response to the break to near atmospheric pressure (0.14 MPa, 20 psia) by 140 s. SG B and SG C began to act as heat sources initially as the primary system cooled down and the secondary pressures dropped. Once the RCPs tripped at 53 s, the pressure in SG B and SG C stabilized at 6.89 MPa (1000 psia) since they were effectively isolated from the primary system by stagnant primary loop flows.

The calculation was terminated at 1300 s when trends suitable for extrapolation had been established. At the time of termination, the primary pressure was steadily increasing, the downcomer temperature was decreasing, and SG A was still filling.

Figure 4.8 presents the calculated and extrapolated downcomer pressure. In the primary system, the pressure decreased initially as the heat transfer to SG A decreased the average primary system temperature. The depressurization lasted until SG A had emptied

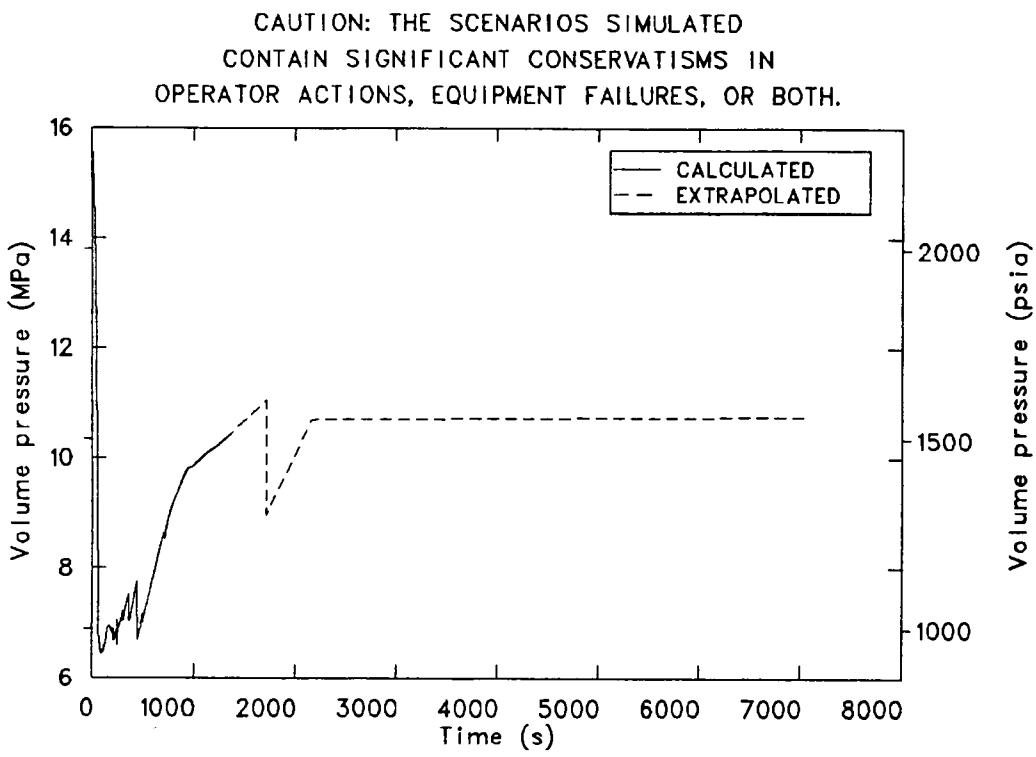

Figure 4.8. Scenario 2: Downcomer pressure profile for double-ended steam-line break at hot 0% power.

sufficiently to degrade its heat transfer and the RCPs had been tripped. The primary system pressure then began to increase as HPI flow refilled the primary system. At the time the calculation was terminated, the pressure was still rising due to the continued influx of makeup flow. It was extrapolated that this rise would continue until the makeup flow was terminated when the pressurizer level attained its set point. Following termination of the makeup flow, the pressure will stabilize just below the HPI pump shutoff head.

Figure 4.9 shows the extrapolated downcomer temperature. The key to extrapolating this parameter was its close coupling to the affected loop's cold leg temperature. Once the HPI flow stopped, the loop A cold leg temperature rose to the outlet temperature of SG A. With AFW continuing to fill SG A with cold water, SG A was subcooled and continued to bring down the primary temperatures. This conclusion was based on the results of Scenario 3 (see below). Coupling the downcomer temperature at the end of the calculation with the rate of temperature decrease in the outlet temperature of SG A gave an extrapolated temperature of 357 K (186°F) at 7200 s.

Figure 4.10 presents the extrapolated heat transfer coefficient at the downcomer wall inner surface. The heat transfer coefficient in the low flow, subcooled regime in the downcomer was found by using the Dittus-Boelter correlation, which decreases as flow decreases. Extrapolated water properties and loop flows were used to calculate the heat transfer coefficient to 7200 s.

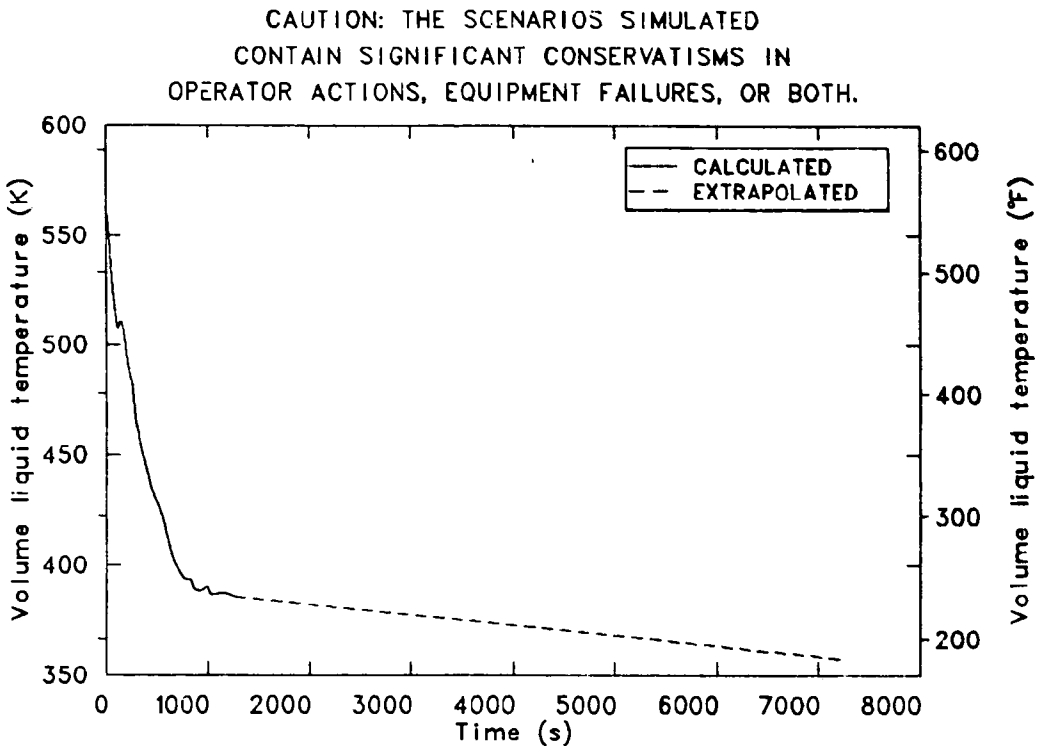

Figure 4.9. Scenario 2: Downcomer temperature profile for double-ended steam-line break at hot 0% power.

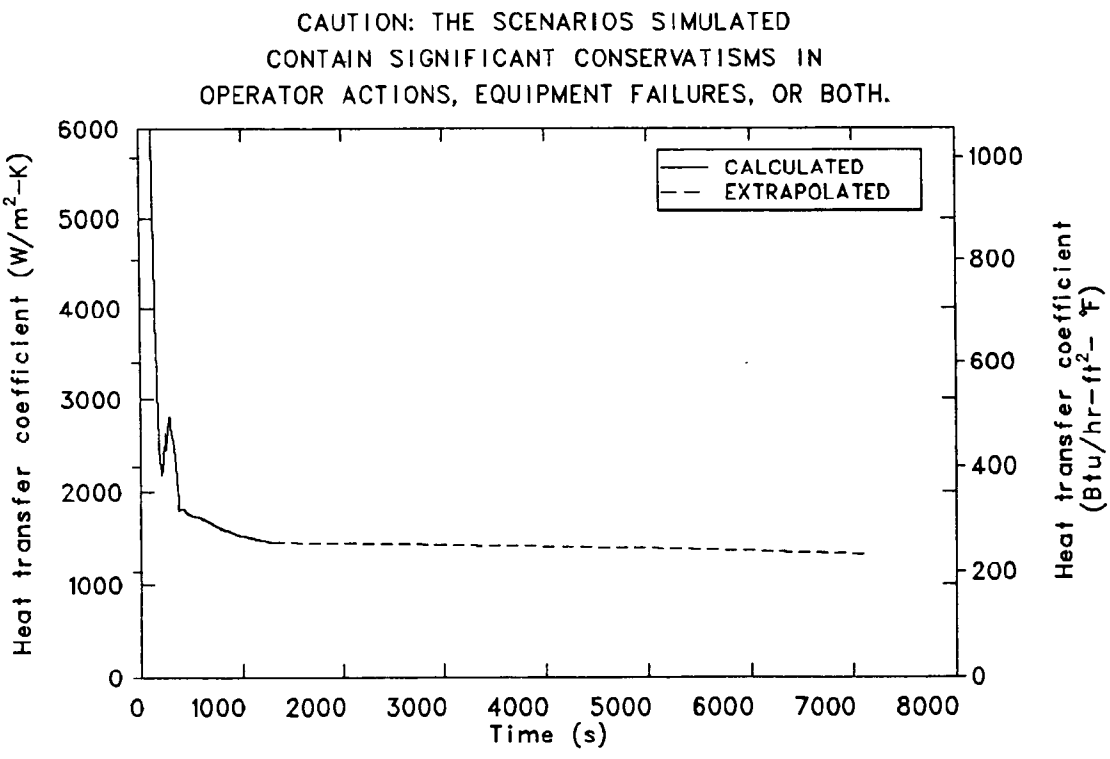

Figure 4.10. Scenario 2: Downcomer inner wall surface heat transfer coefficient for double-ended steam-line break at hot 0% power.

The Scenario 2 calculation and extrapolation led to the following conclusions:

(1) The peak pressure was extrapolated to be 11.0 MPa (1596 psia).

(2) The minimum downcomer fluid temperature was extrapolated to be 357 K (186°F).

The Scenario 2 calculation resulted in a continuous cooldown of the primary system due to the continued flow of AFW into the affected SG. The primary system developed an asymmetric natural circulation condition with flow in the affected loop and stagnation in the remaining two loops.

4.3.2.3. Scenario 3: Stuck-open STM PORV at hot 0% power

Scenario 3 was initiated with the PORV on steam line A transferring open with the reactor at hot 0% power. It was assumed that the operator tripped off the RCP power when the primary system pressure fell below 9.07 MPa (1315 psia) but that he failed to isolate the AFW flow to the affected SG (SG A). These requirements are summarized in Table 4.10, and the sequence of events in the scenario calculation is presented in Table 4.11.

The break size used was 0.009 m^2 (0.098 ft^2). This was the PORV size needed to be consistent with the actual plant PORV capacity to pass 73.08 kg/s (161 lbm/s) of saturated steam to atmosphere at a pressure of 5.45 MPa (790 psia).

Upon occurrence of the break, the SG A secondary pressure fell rapidly. SG B and SG C were isolated from the effects of the break because of the steam-line check valves in each steam line upstream of the common steam-line header. As a result, the SG B and SG C secondary pressures remained elevated except for the minor downward drift associated with the changing heat balance among the SGs. Following the break, the SG A heat removal rate increased dramatically while SG B and SG C became heat sources to the primary coolant system. The peak in the SG A heat removal rate corresponded to the time at which the SG A downcomer fluid flashed and removed the subcooling effect on the outside SG tubes in the lower boiler section.

The pressure initially fell as primary liquid volume shrank due to the high SG A heat removal rate. The falling pressure caused the pressurizer heaters to be fully powered at 13 s.

At 27 s, a SIAS was generated owing to high differential pressure between the common steam-line header and steam line A. Immediate actions caused by the generation of the SIAS were: closure of the FW bypass valves, tripping of power to the operating MFW pump, termination of MFW pump recirculation flow, initiation of motor-driven AFW, and isolation of letdown flow. The SIAS also caused the HPI and LPI pumps to start. However, no flow could be delivered from these pumps unless the primary system pressure fell below their respective shutoff heads. Turbine-driven AFW flow was not initiated during this sequence because two-of-three SGs are required to have low level indications, a condition not met in this scenario.

Table 4.10. Description of Scenario 3[a]

Plant initial state[b]

General description: Hot 0% power, 0% power after 100 hr of shutdown.

System status:

Turbine: Not latched
Secondary PORV: Automatic control
SDVs: Automatic control
Charging system: Automatic control
Pressurizer: Automatic control
Engineering safety features: Automatic control
PORVs: Automatic control
Reactor control: Manual
MFW: In bypass mode, manual control to provide 39% level in SGs; 1 condensate pump, 1 MFWP operating
AFW: Automatic control
MSIVs: Open, automatic control
MFIVs: Closed, automatic control

Transient initiator

A hole appears in steam line A outside containment upstream of the MSIV and downstream of the flow restrictor. The hole size corresponds to that of the steam-line PORV.

Additional failures[c]

Operator fails to isolate AFW to SG A.

Operator reactions to reported information

If SIAS has been generated, operator will trip RCPs when RCS pressure reaches 1300 psig.

[a]The acronyms used in this table (in the order of their appearance) are: PORV = power-operated relief valve, SDV = steam dump valve, MFW = main feedwater, SG = steam generator, MFWP = main feedwater pump, AFW = auxiliary feedwater, MSIV = main steam isolation valve, MFIV = main feedwater isolation valve, SIAS = safety injection actuation signal, RCP = reactor coolant pump, and RCS = reactor coolant system.

[b]Just prior to transient initiator.

[c]Operator failure or failure of equipment demanded during the transient.

Table 4.11. Sequence of events for Scenario 3[a]

Time (s)	Event
0	Break opens; stuck-open PORV in steam line A; reactor at hot 0% power.
2	Pressurizer proportional heaters powered.
13	Pressurizer backup heaters powered.
27	SIAS on high steam-line differential pressure.
	Immediate actions caused by SIAS: FW bypass valves closed, MFW pump tripped, MFW pump recirculation flow terminated, motor-driven AFW initiated, HPI and LPI pumps started (shutoff heads: HPI, 1470 psia; LPI, 145 psia), letdown isolated.
30	Steam generator B becomes primary system heat source.
33	Steam generator C becomes primary system heat source.
81	Low pressurizer level indication, pressurizer heaters tripped off and makeup rate increased.
205	Pressurizer level indication zero (less than 1%).
441	HPI flow starts (1470-psia primary system pressure).
999	RCPs trip.
1161	RCP rotors stopped.
1913	Makeup reduced to 15 gpm RCP seal injection only; pressurizer level > level setpoint.
2455	End of RELAP5 calculation.
7200	End of extrapolation.

[a]The acronyms used in this table (in the order of their appearance) are: PORV = power-operated relief valve, SIAS = safety injection actuation signal, FW = feedwater, MFW = main feedwater, AFW = auxiliary feedwater, HPI = high-pressure injection, LPI = low-pressure injection, and RCP = reactor coolant pump.

Owing to the low pressure in SG A and the high pressure in SG B and SG C, all AFW flow went to SG A. It was assumed that the operator did not intervene either to regulate or to isolate the AFW flow. After 800 s, SG A experienced a net increase in inventory. Under the influence of declining primary pressure, HPI flow started at 441 s, and the RCPs tripped at 999 s. The subsequent loss of loop flow isolated SG B and SG C such that they no longer acted as heat sources to the primary system. By 2400 s, these loops stagnated completely. However, natural circulation continued in loop A owing to cooldown. Stagnation of loops B and C occurred because SG B and SG C were heat sources to the primary system and the heat added caused sufficient density head difference to balance the pressure head which was driving fluid through loop A. Stagnation was not a result of voiding within the SG B and SG C tubes.

The calculation was terminated at 2455 s because a suitable indication of trends existed to allow an extrapolation of results to 7200 s. At the end of the calculation, the primary system pressure was 10.14 MPa (1471 psia) and rising very slowly and the reactor vessel downcomer fluid temperature was 411 K (281°F) and falling slowly. The SG A separator was almost flooded and 30% of its steam dome was also flooded. Loop A continued to circulate throughout the remaining analysis period.

Figure 4.11 shows the downcomer pressure for this scenario. The dashed line (extrapolation) indicates the primary system shrinkage rate exceeded the 15 gpm minimum makeup volume addition rate. The extrapolated pressure at 7200 s is 10.13 MPa (1470 psia).

Figure 4.12 shows the calculated and extrapolated reactor vessel downcomer fluid temperature at an elevation equivalent to the top of the core. The temperature response was dominated by the affected SG heat removal rate and not by the subcooling effects of HPI. For the extrapolation from the end of the calculation to 7200 s it was assumed that the existing cooldown continued. This was based on an affected SG heat removal rate of 14.4 MW and a core decay heat of 8.2 MW. The extrapolated temperature at 7200 s is 397 K (256°F).

Figure 4.13 shows the extrapolation of the heat transfer coefficient on the inside surface of the reactor vessel downcomer wall. The extrapolation was performed simply by extending the trend present at the end of the calculation. This is justified because trends in flow conditions and temperatures are well established at the end of the calculation.

4.3.2.4. Scenario 4: Three SDVs fail open at full power

Scenario 4 was initiated from full-power steady-state conditions by locking open three-out-of-five main SDVs. All automatic plant functions with the exception of the MSIV for loop A were assumed to be operative. It was assumed that the loop A MSIV would fail to close if a MSIV trip signal were generated; however, this condition was not reached during the transient. The reactor is tripped at 41.1 s into the transient to simulate an overpower trip caused by moderator cooldown effects, and the operator was assumed to trip the RCPs on a low pressurizer pressure signal. These requirements are summarized in Table 4.12.

The sequence of events in the Scenario 4 calculation are presented in Table 4.13. At 0 s, three-out-of-five SDVs failed open in the steam line. This hypothetical equipment malfunction is equivalent to a 0.043-m^2 (0.465-ft^2) steam-line break that affects all three SGs. After the break was initiated, the secondary pressure began to drop, resulting in a subsequent primary system cooldown. The reactor was tripped at 41.1 s after transient initiation. This trip was imposed to account for reactor overpower conditions caused by moderator cooldown effects. The reactor trip was based on a separate effects calculation used to estimate the reduced average moderator temperature needed to induce overpower conditions.

After the reactor trip, the primary depressurization rate increased significantly as a consequence of enhanced primary system cooldown caused by a large mismatch between the core decay power and the much larger total power removal through the SGs. The primary

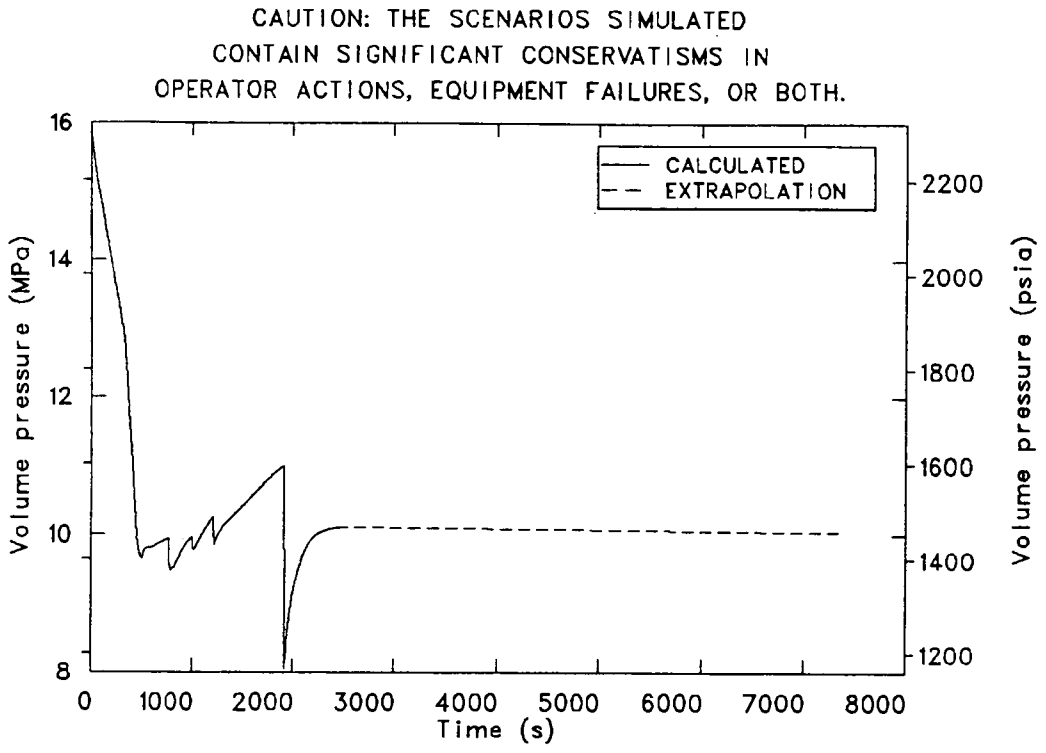

Figure 4.11. Scenario 3: Downcomer pressure profile for stuck-open STM PORV at hot 0% power.

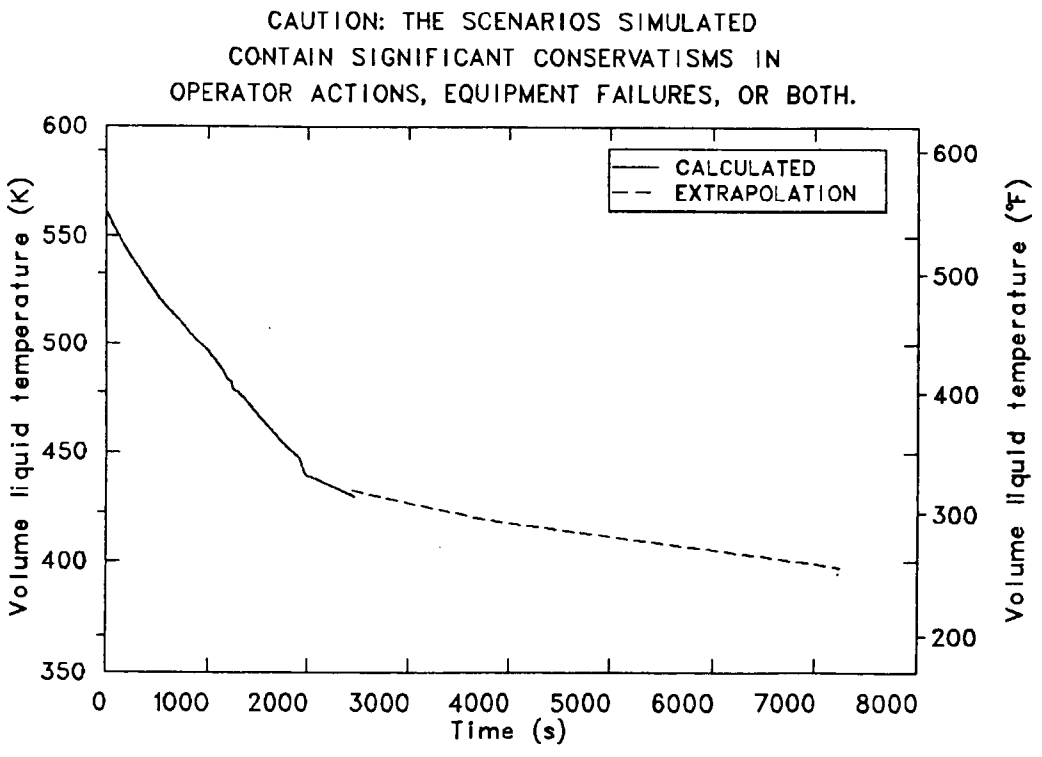

Figure 4.12. Scenario 3: Downcomer temperature profile for stuck-open STM PORV at hot 0% power.

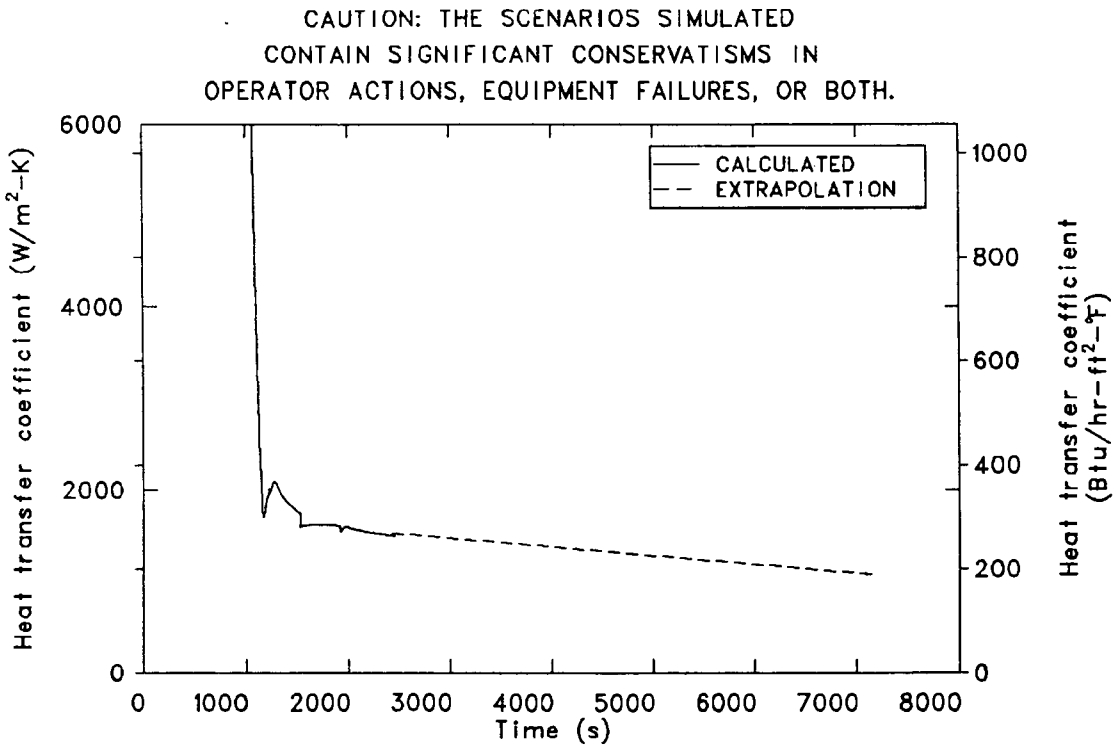

Figure 4.13. Scenario 3: Downcomer inner wall surface heat transfer coefficient for stuck-open STM PORV at hot 0% power.

pressure reached a minimum of 6.9 MPa (1000 psia) at 300 s. Although the primary cooldown continued after 300 s, repressurization was induced by liquid volumetric addition from both HP and CVCS injection. By 1100 s, the primary pressure stabilized at ≈10 MPa (1450 psia), where injection flow just compensated for coolant shrinkage.

Throughout the simulation, the AFW played a key role in maintaining enough SG mass inventory to sustain primary side cooldown. After the MFW train was isolated at 52.9 s, the motor-driven and then the steam-driven AFW systems were activated at approximately 53 s and 99 s, respectively. It was assumed that the operators would make no action to control or isolate AFW flow until the conditions calling for automatic closure of the MSIVs existed. However, these specified conditions were not met over the period of the calculation; therefore, no operator intervention to isolate AFW flow was included. It should be noted that this circumvention of operator action to mitigate the transient represents a sequence involving a blatant operator error and is treated as such in the analysis.

By 600 s, the SGs began to experience net increases in inventory due to AFW flow. At 895 s, the steam-driven AFW pump was lost due to low steam-line pressure affecting turbine operation. SG refill continued but at lower rates corresponding to the motor-driven AFW capacity. This refill continued to 1700 s, where the RELAP5 calculation was terminated.

Table 4.12. Description of Scenario 4[a]

Plant initial state[b]

General description: 100% power, steady state.

System status

Turbine: Automatic control
Secondary PORV: Automatic control
SDVs: Automatic control
Charging system: Automatic control
Pressurizer: Automatic control
Engineering safety features: Automatic control
PORVs: Automatic control
Reactor control: Automatic
MFW: Automatic control
AFW: Automatic control
MSIVs: Open, automatic control
MFIVs: Open, automatic control

Transient initiator

Three SDVs fail open.

Additional failures[c]

1. Affected SDVs will not close.
2. MSIV A fails to close.

Operator reactions to reported information

1. If SIAS is generated, operator will trip RCPs when RCS pressure reaches 1300 psig.
2. Operator will stop AFW flow to the unaffected SG when liquid carryover is observed in the main steam line.
3. Operator will stop AFW flow to SG A 10 min after attempted MSIV closure or when carryover occurs.
4. Operator will fail to close MSIVs during entire 2-hr analysis period.

[a]The acronyms used in this table (in the order of their appearance) are: PORV = power-operated relief valve, SDV = steam dump valve, MFW = main feedwater, AFW = auxiliary feedwater, MSIV = main steam isolation valve, MFIV = main feedwater isolation valve, SIAS = safety injection actuation signal, RCP = reactor coolant pump, RCS = reactor coolant system, and SG = steam generator.

[b]Just prior to transient initiator.

[c]Operator failure or failure of equipment demanded during the transient.

Table 4.13. Sequence of events for Scenario 4[a]

Time (s)	Event
0	Three SDVs fail open.
1	Proportional heaters on.
5	Proportional heaters reach maximum power.
17.35	Backup heaters on.
41.1	Trip reactor.
41.1	Trip turbine.
42	Turbine stop valve closed.
49.85	MFW valves start to close.
52.9	Trip FW pumps.
52.9	MFW valves closed.
52.9	Motor-driven auxiliary feed on.
89.3	Backup and proportional heaters latched off.
98.95	Steam-driven auxiliary feed on.
132.3	SI signal on low pressurizer pressure (1730 psia).
132.3	CVCS flow reaches maximum due to letdown isolation.
132.3	HPI pumps activated.
175	HPI shutoff head overcome.
180	Pressurizer emptied.
181	RCPs tripped.
300	Transition to natural circulation loop flow; HPI reaches maximum flow.
895	Steam-driven auxiliary feed off.
1100	Primary side pressure stabilizes at 10 MPa (1450 psia).
1635	CVCS drops to minimum flow rate of 15 gpm.
1700	End of calculation.
7200	End of extrapolation.

[a]The acronyms used in this table (in the order of their appearance) are: SDV = steam dump valve, MFW = main feedwater, FW = feedwater, SI = safety injection, CVCS = chemical and volume control system, HPI = high-pressure injection, and RCP = reactor coolant pump.

Figure 4.14 presents the calculated and extrapolated pressure response in the reactor vessel downcomer at an elevation adjacent to the top of the core. Both the HPI and CVCS systems were responsible for the repressurization of the primary coolant system. Initially, the HPI was significantly larger than the CVCS mass flow rate. Prior to 1100 s, the HPI flow was the principal cause for repressurization of the primary coolant. This condition changed around 1100 s when the primary pressure approached the HPI shutoff head. The increased primary system mass inventory eventually caused a repressurization of the primary system along with a refilling of the pressurizer.

At 1100 s, the pressurizer pressure reached a plateau of approximately 10 MPa (1450 psia). At this time, the primary coolant shrinkage rate due to cooldown effects was balanced by approximately the same amount of liquid volume injected from the HPI and CVCS systems. During most of the remainder of the simulation, the primary system pressure was maintained at approximately 10 MPa (1450 psia) as the primary system cooldown continued.

At 4830 s, primary side repressurization was predicted to occur at the time the SG secondary sides reached atmospheric pressure conditions and the secondary depressurization stopped. It was concluded that the core decay power matched the total SG heat removal rate. As a consequence, when the secondary depressurization and cooldown stopped, shrinkage of the primary coolant ceased. Continued CVCS injection then caused a gradual primary side repressurization. By 7200 s, the system pressurized to 11.8 MPa (1711 psia) with an estimated uncertainty of 1.4 MPa (203 psia). The principal source of uncertainty in the final primary pressure was the estimated time at which the SGs would blow down to atmospheric conditions.

Coincident with the stabilization of the secondary side conditions was a stabilization of the primary side downcomer temperature (see Figure 4.15). After natural circulation had been established in the primary coolant loops, the temperatures of the fluid exiting the primary side SG outlets were approximately equal to the secondary side SG boiler saturation temperatures. It was concluded this trend would persist out to 7200 s because of relatively low primary loop mass flows and because the core decay power out to 7200 s was adequate to maintain the liquid in the SG boiler sections at saturation conditions. At 4830 s, when the SGs reached atmospheric conditions, both the downcomer and cold leg temperatures were estimated to stabilize at 373 K (212°F). This temperature corresponds to atmospheric saturation conditions without accounting for the SG boiler hydrostatic head effects, which would slightly increase the boiler saturation temperature.

The extrapolated values for the cold leg loop flows and downcomer heat transfer coefficient were maintained at the values calculated at 1700 s (Figure 4.16). These estimates were made using the assumption that the primary system density gradients that drive the natural circulation loop flows would not significantly change in the 1700 to 7200 s period.

The simulation of Scenario 4 indicated that the primary coolant system initially experienced a rapid cooldown and depressurization until about 300 s, followed by a gradual cooldown as natural circulation continued and heat was transferred to the SG. As a consequence of CVCS and HPI operation, partial recovery of the primary system pressure

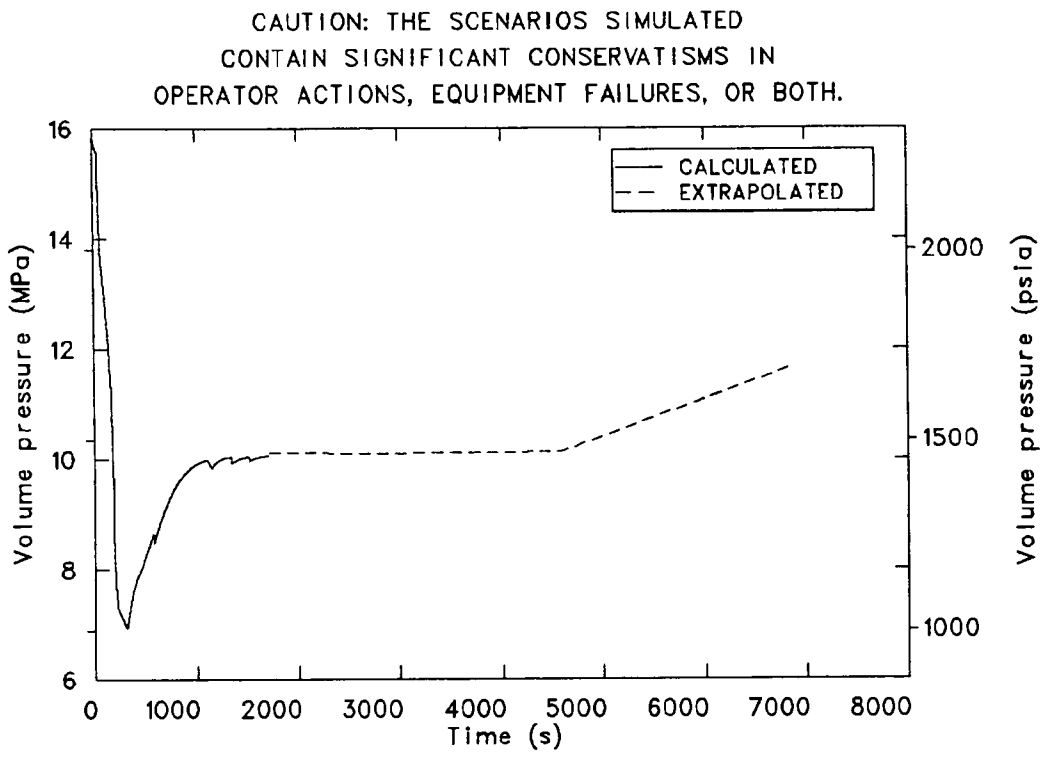

Figure 4.14. Scenario 4: Downcomer pressure profile for three SDVs failing open at full power.

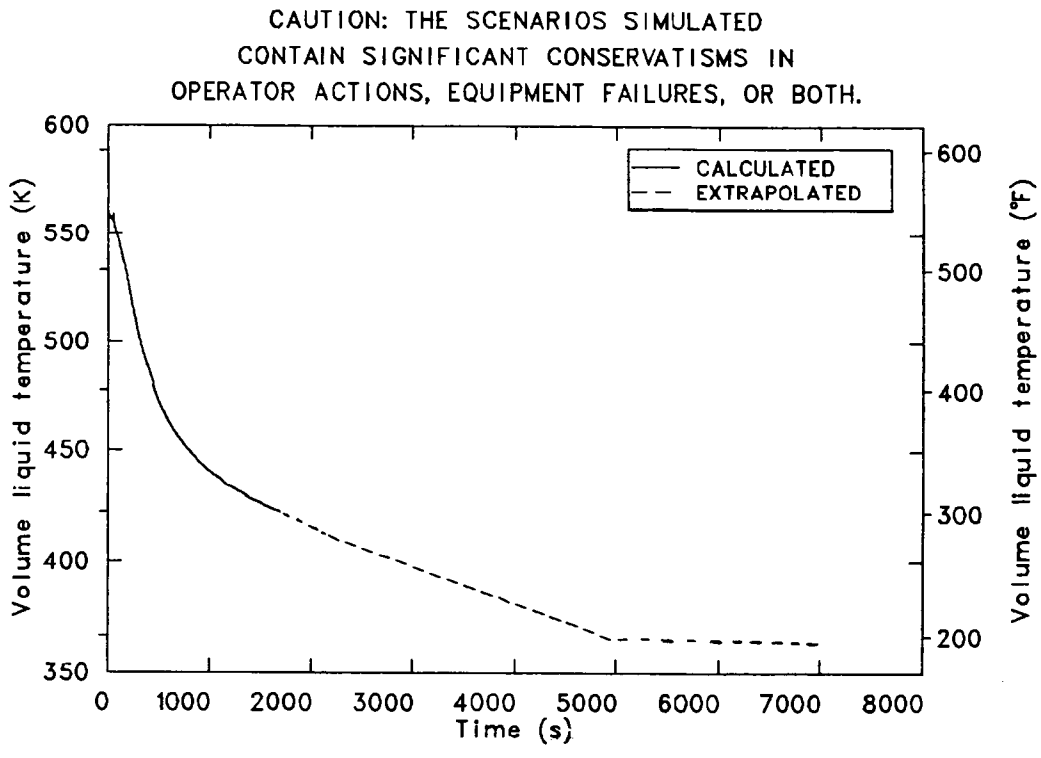

Figure 4.15. Scenario 4: Downcomer temperature profile for three SDVs failing open at full power.

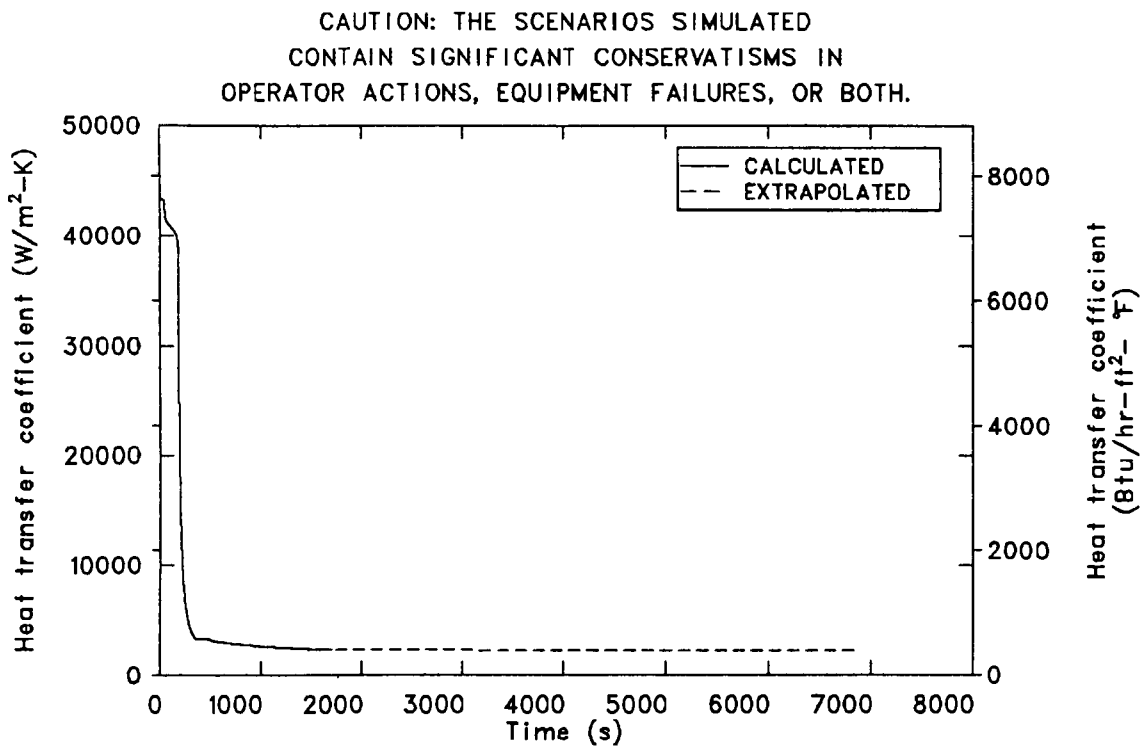

Figure 4.16. Scenario 4: Downcomer inner wall surface heat transfer coefficient for three SDVs failing open at full power.

occurred. At 7200 s, the minimum downcomer fluid temperature and subsequent maximum pressure were extrapolated to 373 K (212°F) and 11.8 MPa (1711 psia), respectively.

4.3.3. Runaway Feedwater Calculations

4.3.3.1. Scenario 5: AFW overfeed at full power

Scenario 5 is the only transient in the runaway feedwater category. The transient was initiated from full-power steady-state conditions when both MFW pumps tripped. The AFW pumps failed to start when first demanded but, at 8 min into the transient, both the motor-driven and the turbine-driven AFW pumps were manually started and set to provide maximum flow. The AFW was terminated when the void fractions in the volumes representing the steam domes of all the SGs dropped below 50%. This cutoff point simulated the time when liquid carryover would be observed in the steam line. All other control systems operated as designed in their automatic modes. These requirements are summarized in Table 4.14.

The sequence of events for Scenario 5 is given in Table 4.15. The transient was initiated by the tripping of both MFW pumps. This trip caused an immediate turbine trip, which, in turn, caused a reactor trip. The steam control valve closed by 1 s, simulating the closure of the turbine isolation value. Also at 1 s, the SDVs opened on a load rejection signal. Hot leg temperatures dropped immediately as core power dropped. This cooldown

Table 4.14. Description of Scenario 5[a]

Plant initial state[b]

100% power, steady state.

System status

Turbine: Automatic control
Secondary PORV: Automatic control
SDVs: Automatic control
Charging system: Automatic control
Pressurizer: Automatic control
Engineering safety features: Automatic control
PORVs: Automatic control
Reactor control: Automatic
MFW: Automatic control
AFW: Automatic control
MSIVs: Open, automatic control
MFIVs: Open, automatic control

Transient initiator

Both MFW pumps trip simultaneously.

Additional failures[c]

AFW pumps fail to start on demand.

Operator reactions to reported information

1. Operator initiates actions to correct auxiliary flow problem and restarts all AFW pumps to provide maximum flow at 8 min; AFW flow at maximum to all three SGs and all AFW pumps started (feedwater source is condensate tank).
2. Operator will stop all AFW flow when liquid carryover is observed in the main steam lines.

[a]The acronyms used in this table (in the order of their appearance) are: MFW = main feedwater, AFW = auxiliary feedwater, and SG = steam generator.

[b]Just prior to transient initiator.

[c]Operator failure or failure of equipment demanded during the transient.

Table 4.15. Sequence of events for Scenario 5[a]

Time (s)	Event
0	Tripped MFW pumps; turbine tripped; reactor tripped.
1	Turbine isolation valve closed; SDVs opened on load rejection; proportional pressurizer heaters turned on.
3	Backup pressurizer heaters turned on.
4	SDVs closed.
5	MFW valves closed.
29	SDVs opened.
480	AFW, motor and turbine turned on manually.
674	Backup pressurizer heaters turned off (cycle on and off until approximately 950 s).
784	AFW shifts to SG C due to pressure imbalance.
854	SDVs closed.
880	High T_{avg} dropped below 547°F; steam dump control shifted from plant trip control (PTC) to steam pressure control (SPC).
970	AFW flow shifts to SG B due to pressure imbalance; pressurizer proportional heaters turned off.
991	Pressurizer sprays turned on (cycle on and off until approximately 1100 s).
1540	AFW flow splits between all three SGs.
1924	AFW flow shifts to SG A due to pressure imbalance.
1976	Pressurizer heaters turned off on low pressurizer level.
2015	SIAS signal on high differential pressure between steam line A and header; letdown flow isolated.
2352	SG A filled and isolated; AFW flow shifted to SG B.
2693	SG B filled and isolated; AFW flow shifted to SG C.
3027	SG C filled and isolated; AFW flow turned off, minimum downcomer temperature obtained [535 K (503°F)].
3131	Pressurizer spray turned on.
3201	Makeup flow at minimum value.
3600	End of calculation.
7200	End of transient.

[a]The acronyms used in this table (in the order of their appearance) are: MFW = main feedwater, SDV = steam dump valve, AFW = auxiliary feedwater, SG = steam generator, and SIAS = safety injection actuation signal.

shrank the primary system fluid volume and caused an outsurge from the pressurizer, which, in turn, caused the primary system pressure to fall. At 3 s, the pressurizer heaters came on as a result of the drop in pressure.

At 4 s, the SDVs closed and at 29 s they modulated open to control the primary system average temperature to 559 K (547°F). The primary pressure continued to fall until approximately 90 s, at which time the pressurizer heaters overcame the effect of the cooldown, and the primary system pressure began to rise. It rose steadily until it reached the heater control point of 15.6 MPa (2270 psia) at 674 s. The pressurizer heaters then cycled on and off to hold the pressure at that point. The primary system pressure never dropped low enough to turn on the HPI or trip off the RCPs.

Energy removal out the SDVs kept the primary system temperatures near 560 K (548°F) from 29 s to the start of the AFW system at 8 min (480 s). Both the motor-driven and the steam-driven AFW systems were started and set to maximum flow. Until warm water in the AFW lines was flushed out, there was little cooldown of the SGs. At 784 s, cool AFW entering SG C caused condensation, which lowered the secondary pressure relative to SG A and SG B. This pressure differential led to preferential AFW flow to SG C. As SG C filled, its pressure eventually stabilized and the SG secondary pressures came back into balance. At 970 s, preferential flow to SG B commenced. At 1300 s, the flow shifted to SG A (not indicated in Table 4.15). After 1540 s the AFW flow regime alternated between symmetric feeds of the SGs and preferential flow to a single generator. This behavior continued until 3027 s, when AFW was terminated. The minimum downcomer temperature of 535 K (503°F) was obtained at this point.

Figures 4.17 and 4.18 show the calculated and extrapolated downcomer pressure and temperature, respectively, for Scenario 5. Pressurizer sprayer capacity is sufficient to control primary system pressure during the heatup experienced at the end of this transient. Therefore, the primary system pressure would stay at approximately 16.0 MPa (2320 psia) through 7200 s. Primary and secondary system temperatures would stay closely coupled and would rise until the secondary pressure reached 7.03 MPa (1020 psia) at about 4600 s, at which time the SDVs would open to hold SG pressure at that point. This pressure corresponds to a saturation temperature of 559 K (547°F). The primary temperature would therefore rise until it reached 559 K (547°F) and then stay there through 7200 s. The cold leg temperatures would be essentially the same as the downcomer temperature through 7200 s because the primary coolant pumps would stay on. Cold leg flow rates would also stay nearly constant through 7200 s because of primary coolant pump operation.

Figure 4.19 shows the heat transfer coefficient at the outer wall of the downcomer, extrapolated to 7200 s.

4.3.4. Small-Break LOCA Calculations

LOCA events present stagnated loop conditions which may result in localized low-temperature effects. Five scenarios were identified for this class of transients. Scenario 6 consisted of a 2-1/2-in. hot leg break at full power. Scenario 7 featured a break at full

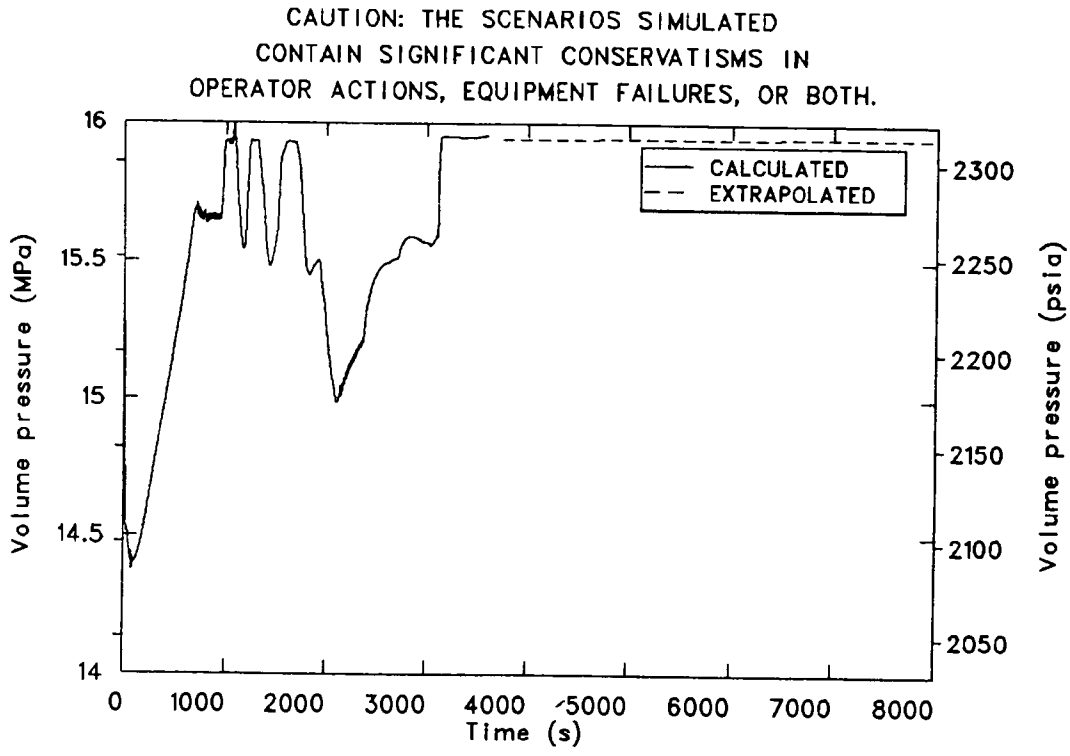

Figure 4.17. Scenario 5: Downcomer pressure profile for overfeed with AFW at full power.

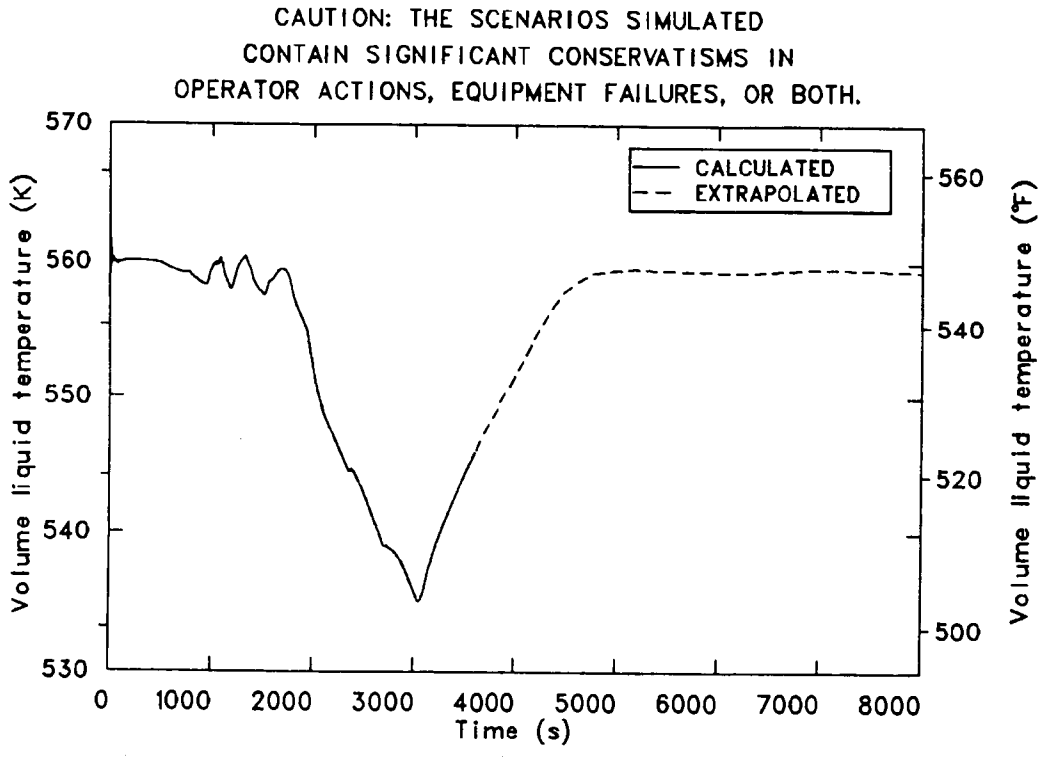

Figure 4.18. Scenario 5: Downcomer temperature profile for overfeed with AFW at full power.

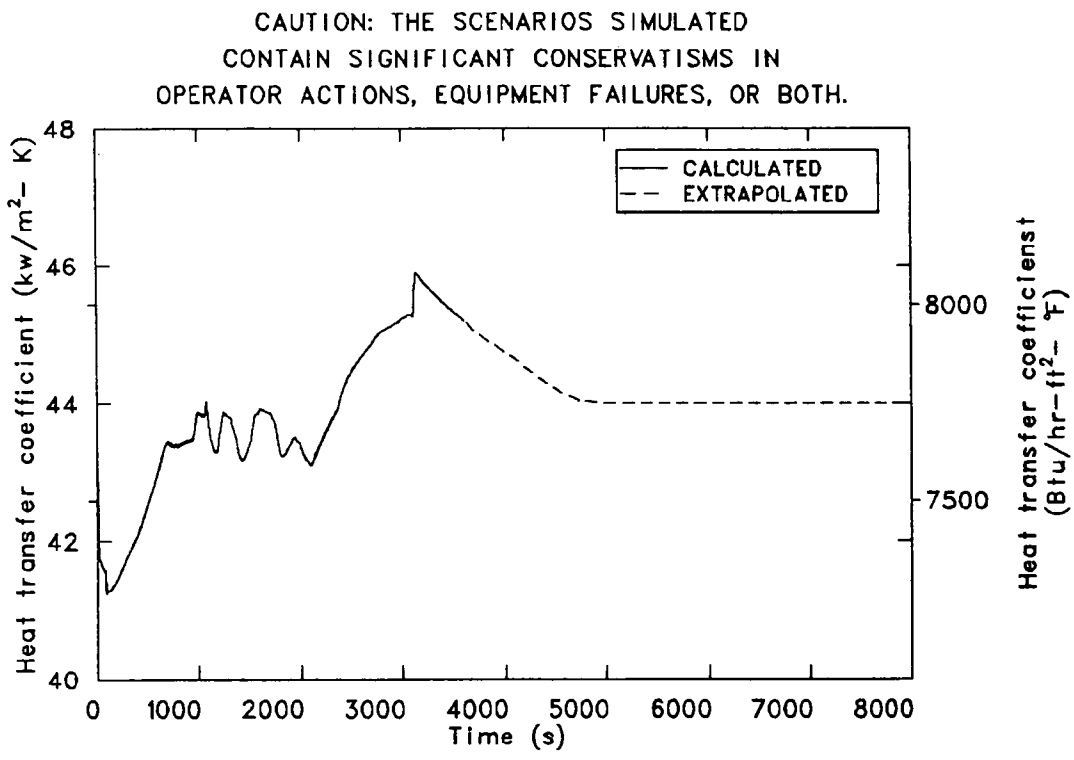

Figure 4.19. Scenario 5: Downcomer inner wall surface heat transfer coefficient for overfeed with AFW at full power.

power that was equivalent to a stuck-open PZR PORV; the break was isolated after 10 min. Scenario 8 consisted of a 2-1/2-in. hot leg break at hot 0% power. Scenario 9 was characterized by a 2-in. hot leg break at full power. Finally, Scenario 10 featured a break at hot 0% power that was equivalent to a stuck-open PZR PORV.

4.3.4.1. Scenario 6: 2-1/2-in. hot leg break at full power

Scenario 6 was initiated from the full-power steady-state condition (nominal temperature and pressure) when a 0.0635-m-diameter (2-1/2-in.) hole appeared in the bottom of the horizontal section of the hot leg of loop C, just upstream of the pressurizer surge line connection. It was assumed that all systems operated automatically as designed. Two operator actions were required: (1) to trip the RCPs when the primary pressure reached 9.1 MPa (1315 psia), if a SIAS signal has been generated, and (2) throttle AFW flow to maintain a 40% narrow range level in each of the SGs. The transient scenario is summarized in Table 4.16.

The sequence of events for the scenario is presented in Table 4.17. As noted above, the small break was assumed to occur at 0 s in the bottom of the loop C hot leg. The primary system rapidly depressurized. Both the proportional and the backup heaters were turned on to recover the pressure. Also, as a result of the break, the pressurizer level rapidly decreased and the makeup flow increased to compensate for the lost liquid inventory.

Table 4.16. Description of Scenario 6[a]

Plant initial state[b]

100% power, steady state.

System status

Turbine: Automatic control
Secondary PORV: Automatic control
SDVs: Automatic control
Charging system: Automatic control
Pressurizer: Automatic control
Engineering safety features: Automatic control
PORVs: Automatic control
Reactor control: Automatic
MFW: Automatic control
AFW: Automatic control
MSIVs: Open, automatic control
MFIVs: Open, automatic control

Transient initiator

A 0.0635-m-diameter (2½-in.) hole appears in the loop C hot leg.

Additional failures[c]

None.

Operator reactions to reported information

1. If SIAS is generated, the operator will trip the RCPs when RCS pressure reaches 1300 psig.
2. Operator will throttle AFW flow to maintain 40% SG level.

[a]The acronyms used in this table (in the order of their appearance) are: SIAS = safety injection actuation signal, RCP = reactor coolant pump, RCS = reactor coolant system, AFW = auxiliary feedwater, and SG = steam generator.

[b]Just prior to transient initiator.

[c]Operator failure or failure of equipment demanded during the transient.

At ~16 s, the reactor tripped on two-out-of-three reactor over-temperature ΔT signals. The primary depressurization rate increased due to the rapid reduction in core power and a lag in the response of the primary to secondary heat removal rate. The steam dump control system changed from load rejection mode to PTC mode at the time of the reactor trip to bring the plant average temperature down to 559 K (547°F). The SDVs opened and closed due to a large mismatch between the plant average temperature and the temperature set point in the PTC mode and an undershoot of a lead-lag controller in the PTC system logic.

Table 4.17. Sequence of events for Scenario 6[a]

Time (s)	Event
0	0.0635-m-diameter (2½-in.) break appears in bottom of loop C hot leg; primary system depressurizes and pressurizer heaters energize.
16	Reactor trips on 2/3 reactor over-temperature ΔT signal; turbine stop valves close; steam dump system switches to PTC mode.
25	Pressurizer heaters deenergize due to pressurizer level dropping below 14.4% of measured level.
27	SIAS received on low pressurizer pressure; MFW pumps trip; MFW valves close; motor-driven AFW initiated.
40	HPI flow initiated; steam-driven AFW initiated.
50	Pressurizer empty; SDVs open.
55	RCPs trip; vessel upper head begins to void.
295	T_{avg} drops below 559 K (547°F); steam dump system switched to SPC; SDVs close.
400	Hot legs and SG tubes void; natural circulation to loops A and B stops.
607	AFW flow to SG C stops due to 40% narrow range level criteria.
849	AFW flow to SG B stops due to 40% narrow range level criteria.
989	AFW flow to SG A stops due to 40% narrow range level criteria.
1000	Natural circulation to loop C stops.
2440	Accumulator flow initiated.
2800	Transient terminated; reactor vessel downcomer pressure and temperature are 3.6 MPa (522 psia) and 362 K (193°F) respectively.

[a]The acronyms used in this table (in the order of their appearance) are: PTC = plant trip control, SIAS = safety injection actuation signal, MFW = main feedwater, AFW = auxiliary feedwater, HPI = high-pressure injection, SDV = steam dump valve, RCP = reactor coolant pump, SPC = steam pressure control, and SG = steam generator.

Also as a result of the reactor trip, the break mass flow rate increased owing primarily to an increase in the pressurizer surge line outflow rate. At the time of the reactor trip, the primary system depressurized; however, the pressurizer did not depressurize as fast owing to the energized pressurizer heaters trying to maintain pressure.

At 25 s, the pressurizer level dropped below 14.4%, the heaters were turned off, the driving potential decreased, and the break mass flow rate decreased.

At approximately 27 s, the primary system had dropped to 11.9 MPa (1730 psia), actuating the SIAS. As a consequence, the MFW valves closed, isolating the MFW from the SG secondaries. The MFW pumps tripped on low flow and the heater drain flow was terminated. At the termination of the MFW pump power, the motor-driven AFW system was activated and AFW began flowing into the SGs.

By 40 s, the primary system pressure had dropped below the HPI shutoff head and HPI flow into each cold leg was initiated. Also at this time, two out of three SGs had reached the low-low level signal set point and the steam-driven AFW flow was initiated to the SGs.

Between 50 and 55 s, several events occurred. At approximately 50 s, the undershoot of the lead-lag controller in the PTC system had corrected itself and the SDVs opened. Also by this time, the pressurizer was completely empty. At approximately 55 s, the primary system pressure had dropped below 9.1 MPa (1315 psia) and the RCPs were tripped. As the pumps coasted down, the loop flow transitioned from full flow to natural circulation.

At approximately 150 s, voiding of the reactor vessel upper head had been completed and voiding in the upper plenum, downcomer above the inlet annulus, and hot legs had commenced. Two-phase fluid reached the break and the break mass flow drastically dropped. Vapor generation in the vessel upper plenum and the reduction in the break flow rate resulted in a stabilization of the primary system pressure for approximately 150 s.

At approximately 300 s, the highest average temperature dropped below 559 K (547°F) and the steam dump system control changed from PTC mode to SPC mode, closing the SDVs. Between 300 and 1000 s, vapor generation and condensation effects resulted in perturbations in the primary system pressure response as the loops and upper plenum drained.

As specified in the scenario, the operator controlled the secondary level around the 40% narrow range level. At approximately 600 s, the level in SG C reached the 40% level and AFW flow to that SG was terminated. AFW flow to the SG A and SG B was terminated at approximately 849 and 989 s, respectively.

By approximately 400 s, enough voiding in loops A and B had occurred that natural circulation had stopped and these loops were very nearly stagnant throughout the remainder of the calculation. However, owing to the effects of the break, loop C continued to circulate until approximately 1000 s. At this time, the liquid in the loop C SG tubes and hot leg had drained and natural circulation was lost.

When the loop C hot leg had drained at 1000 s, high-quality fluid was at the break, resulting in a sharp decrease in the break mass flow. The total primary inflow from HPI and makeup after this time equaled or exceeded the break mass flow. The primary system depressurization was stopped and a slow repressurization began, owing mainly to volume expansion from vapor generation in the primary loops and vessel and wall heat transfer to the fluid. The repressurization continued until approximately 1800 s, when the energy removal at the break exceeded core power and energy addition from primary metal mass (heat removal through the SGs was negligible at this time). From 1800 s to the termination of the calculation, primary system pressure decreased primarily because of energy removal at the break.

At approximately 2440 s, the primary system pressure dropped below 4.6 MPa (673 psia) and accumulator injection began. With accumulator flow, the total mass inflow to the primary system and the break mass flow were nearly equal. The primary system was slowly refilling when the calculation was terminated at 2800 s. The primary system pressure at the termination of the calculation was 3.6 MPa (522 psia) and decreasing, and the reactor vessel downcomer fluid temperature was 362 K (193°F) and decreasing.

An extrapolation of the pressure to 2 hr is shown in Figure 4.20. At the termination of the transient, heat removal from the primary to the secondary was nearly zero and the primary system was gaining very little mass due to the total emergency core cooling (ECC) mass inflow (including accumulator flow) equaling the break mass flow rate. It was estimated that the primary system would continue to depressurize as shown in Figure 4.20 until the break flow and total ECC inflow were balanced and energy removal through the break or SGs was balanced with the core decay power. It was estimated this steady state would occur at approximately 3200 s at a pressure of 0.9 MPa (142 psia), which is just below the LPI shutoff head. The addition of LPI fluid is sufficient to hold the pressure at 0.9 MPa (142 psia) through the remainder of the 2-hr period of PTS concern.

Figure 4.21 shows the extrapolation of the reactor vessel downcomer temperature. Loop mass flows at the end of the calculation were nearly equal to the ECC flow rate (essentially stagnant), and the downcomer temperature was approaching the temperature of the ECC fluid temperature of 305 K (90°F). It was estimated that the reactor vessel downcomer temperature would be dominated by the ECC fluid temperature because of loop flow stagnation and would decrease until it approached the temperature of the ECC fluid. Mixing of the cold leg fluid coming from the upper head and plenum leakage paths would keep the reactor vessel downcomer temperature slightly above the cold leg temperature. The estimated reactor vessel downcomer temperature at 2 hr was 310 K (100°F).

Figure 4.22 shows the extrapolation of the reactor vessel downcomer inner surface wall heat transfer coefficient. After the RCPs tripped, the wall-to-fluid heat transfer regime changed to a natural circulation/pool boiling mode as the loop flow transitioned from forced flow, to natural circulation, to stagnation. It was estimated that after 2800 s the wall heat transfer coefficient would not change significantly.

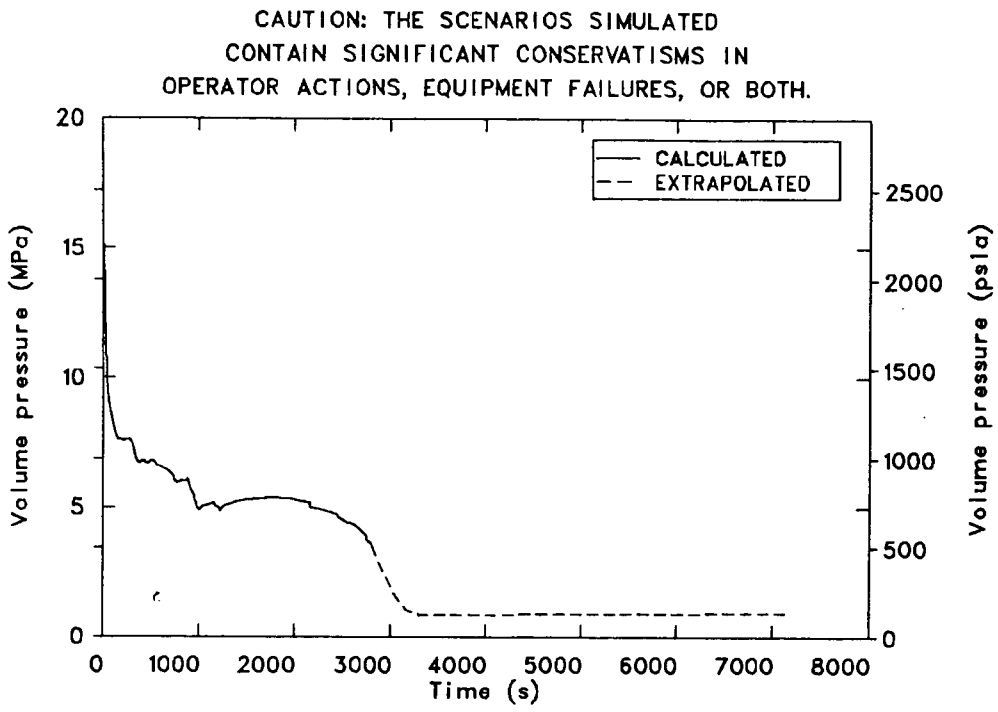

Figure 4.20. Scenario 6: Downcomer pressure profile for 2-1/2-in. hot leg break at full power.

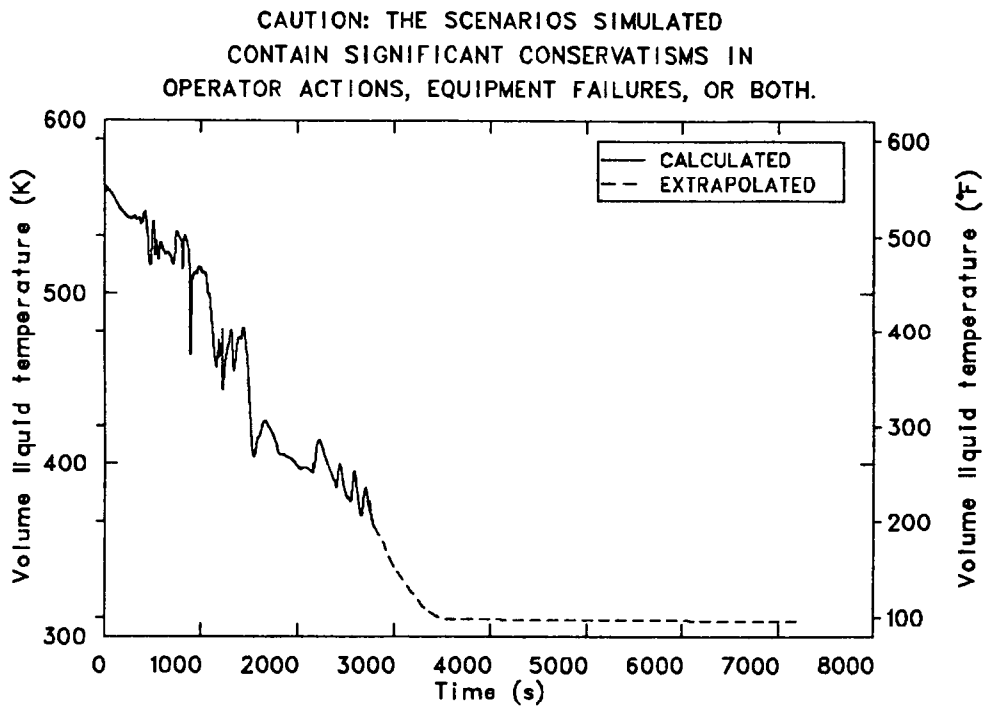

Figure 4.21. Scenario 6: Downcomer temperature profile for 2-1/2-in. hot leg break at full power.

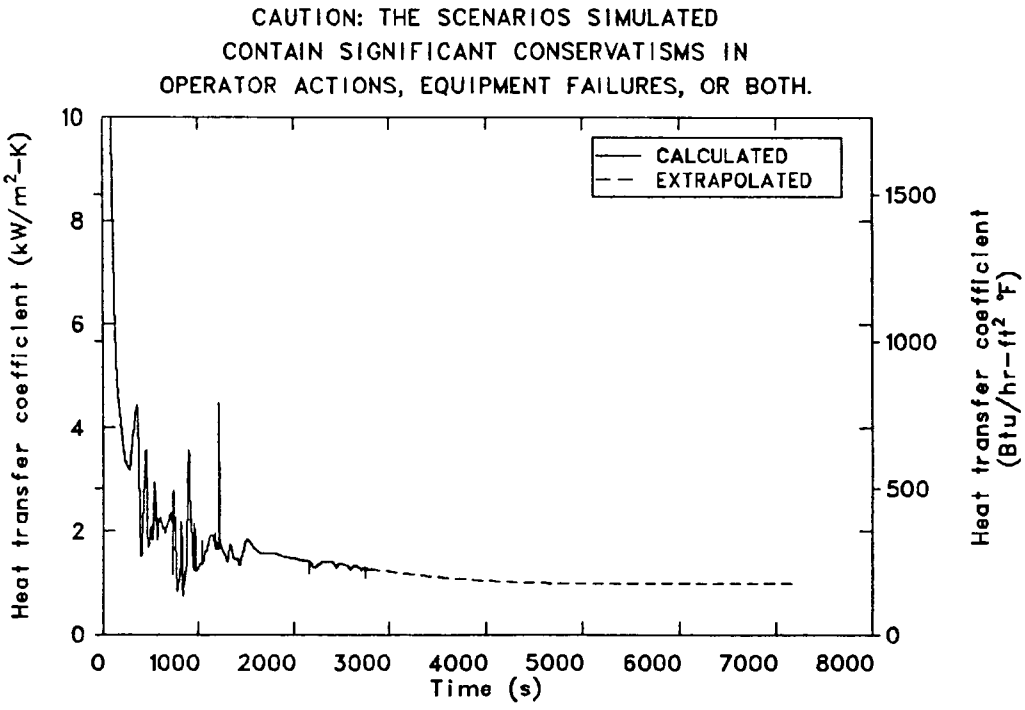

Figure 4.22. Scenario 6: Downcomer inner wall surface heat transfer coefficient for 2-1/2-in. hot leg break at full power.

4.3.4.2. Scenario 7: PZR PORV-size break at full power

Scenario 7 was initiated from the full-power steady-state condition by a PZR PORV-size break. The PORV was closed 10 min into the transient to simulate an operator closing a block valve. It was assumed this block valve would prevent any further flow through either PORV. All other control systems operated in their automatic modes. These requirements are summarized in Table 4.18.

The detailed sequence of events for this transient is presented in Table 4.19. The transient was initiated by the opening of one PZR PORV. The primary system pressure began to fall as mass was lost out of the PORV; however, almost all other parameters in the plant remained essentially unchanged until 33.4 s, at which time the reactor was tripped. The reactor tripped on 2-out-of-3 reactor over-temperature ΔT signals.

Following the reactor trip, the primary system pressure dropped more rapidly as the primary system cooled. By 45 s, the TSVs were closed, and the SDVs had opened on a load rejection signal, staying open for 3 s. The FW valves also began to close following the reactor trip, and by 52 s they were completely closed. The MFW pumps tripped and both the motor-driven and the turbine-driven AFW pumps began delivering FW at 54 s. At 72 s, the SDVs modulated open and brought the primary system average temperature down to 560 K (547°F).

Table 4.18. Description of Scenario 7[a]

Plant initial state[b]

100% power, steady state.

System status

Turbine: Automatic control
Secondary PORV: Automatic control
SDVs: Automatic control
Charging system: Automatic control
Pressurizer: Automatic control
Engineering safety features: Automatic control
PORVs: Automatic control
Reactor control: Automatic
MFW: Automatic control
AFW: Automatic control
MSIVs: Open, automatic control
MFIVs: Open, automatic control

Transient initiator

PZR PORV transfers full open.

Additional failures[c]

PORV blocking valve will not close until 10 min into transient.

Operator reactions to reported information

1. The operator shuts PORV blocking valve at 10 min into transient.
2. If SIAS is generated, operator will trip the RCPs when RCS pressure reaches 1300 psig.

[a]The acronyms used in this table (in the order of their appearance) are: PZR PORV = pressurizer power-operated relief valve, PORV = power-operated relief valve, SIAS = safety injection actuation signal, RCP reactor coolant pump, and RCS = reactor coolant system.

[b]Just prior to transient initiator.

[c]Operator failure or failure of equipment demanded during the transient.

At 113 s, the primary system pressure dropped below 10.1 MPa (1470 psia), and HPI flow was initiated. At 139 s, the primary system pressure dropped below 9.07 MPa (1315 psia), and the RCPs were tripped. Hot leg temperatures then increased and cold leg temperatures decreased as the loop flow rate dropped. By approximately 300 s, a stable natural circulation flow was established in all three loops as energy was added to the primary fluid from decay heat and removed through the SGs. By 180 s, the primary system pressure had dropped to the saturation pressure of the fluid in the reactor vessel upper

Table 4.19. Sequence of events for Scenario 7[a]

Time(s)	Event
0.0	PZR PORV opens.
33.4	Reactor trips on 2/3 reactor ΔT; turbine stop valve closes; FW valves begin to close.
34	SDV opens.
37	SDV closes.
52	FW valves close.
54	MFW pumps trip.
72	SDV opens.
113	HPI flow initiated on low primary system pressure.
139	RCPs trip on low primary system pressure.
180	Reactor vessel upper head fluid saturates and begins to flash.
272	SDV control shifted to steam pressure control (SPC) mode; dump valve closes.
278	Normalized pressurizer level goes scale high.
600	PZR PORV block valve closes.
620	AFW flow shifts to SG C due to pressure imbalance.
674	AFW flow to SG C isolated; flow shifts to SG B.
706	AFW flow to SG B isolated; flow shifts to SG A.
848	AFW flow to SG A isolated; all AFW flow stopped.
947	Minimum reactor vessel downcomer temperature reached [538 K (509°F)].
1490	Reactor vessel upper head refills with liquid.
1506	Primary system pressure rises above HPI shutoff head; HPI flow stops.
1840	SDVs open.
2088	PZR SRV opens and then immediately closes.
2200	End of calculation.

[a]The acronyms used in this table (in the order of their appearance) are: PZR PORV = pressurizer power-operated relief valve, SDV = steam dump valve, FW = feedwater, MFW = main feedwater, HPI = high-pressure injection, RCP = reactor coolant pump, AFW = auxiliary feedwater, SG = steam generator, and PZR SRV = pressurizer safety relief valve.

head, and the fluid there began to flash. As liquid was forced out of the upper head when the bubble there grew, liquid surged into the pressurizer, rapidly increasing the pressurizer level over its indicated range at 278 s, although the pressurizer was not completely full. Some voids also formed at the top of the vessel downcomer.

The total HPI flow exceeded the flow out the PORV very soon after HPI initiation. At approximately 300 s, the volumetric injection of the HPI system exceeded the volume lost out the PORV, and the primary system began to repressurize. Repressurization was very slow at first. At 600 s, the PZR PORV was closed, simulating the closure of a block valve by an operator. The rate of repressurization increased at that time, but was still fairly slow as the voids in the reactor vessel upper head and downcomer collapsed.

Condensation effects caused pressure imbalance effects that preferentially directed all AFW flow to SG C, SG B, and SG A in sequence. AFW flow to the respective SGs was isolated on attainment of 40% level. Natural circulation flows promoted thermal equilibration of the primary and SG secondaries. During this equilibration period, the minimum downcomer temperature of 538 K (509°F) was reached at 947 s or 100 s after AFW isolation.

After the isolation of the AFW system and equilibration, the heat sink for the primary system was lost, and the primary system began heating up. The primary system was also being filled by the HPI flow. At 934 s, the pressurizer went liquid full, and at 1490 s the upper head of the reactor vessel completely filled with liquid. The primary system pressure then rose rapidly, exceeding the HPI shutoff head of 10.1 MPa (1470 psia) at 1506 s. HPI flow stopped, and the primary pressure continued to increase because the primary fluid was swelling as it heated up and the CVCS was still injecting water at its minimum rate [9.2×10^{-4} m^3/s (15 gpm)].

At 1840 s, secondary pressures had risen to 7.03 MPa (1020 psia), and the SDVs opened to hold the pressure at that point. This pressure corresponds to a saturation temperature of 559 K (547°F). Therefore, the SDVs modulated to control the primary and secondary fluid temperatures close to 559 K (547°F) through the end of the calculation. Primary system pressure rose high enough to open the pressurizer safety relief valve (PZR SRV) once, very briefly, at 2088 s. The primary system pressure then stayed stable at just under the PZR SRV set point, 17.5 MPa (2535 psia), through the end of the calculation. At the end of the calculation, at 2200 s, both the downcomer pressure and the temperature were stable — at 17.5 MPa (2535 psia) and 560 K (548°F), respectively.

Figures 4.23 and 4.24 show the downcomer pressure and temperature extrapolated to 7200 s. The SDV capacity was more than sufficient to remove the decay heat, so the primary system temperatures would stay very close to 560 K (548°F) out through 7200 s. Because mass was still being added to the primary system by the CVCS, the PZR SRV would occasionally open to relieve the pressure, and the primary system would remain at the valve's set point, 17.5 MPa (2535 psia), out through 7200 s. Mass flow in all three loops would act symmetrically, and since a stable natural circulation flow had been established, the flow rates would stay essentially constant from the end of the calculation out through 7200 s. The heat transfer coefficient in the downcomer (Figure 4.25) was a strong function of the mass flow rate and would also remain essentially constant through 7200 s.

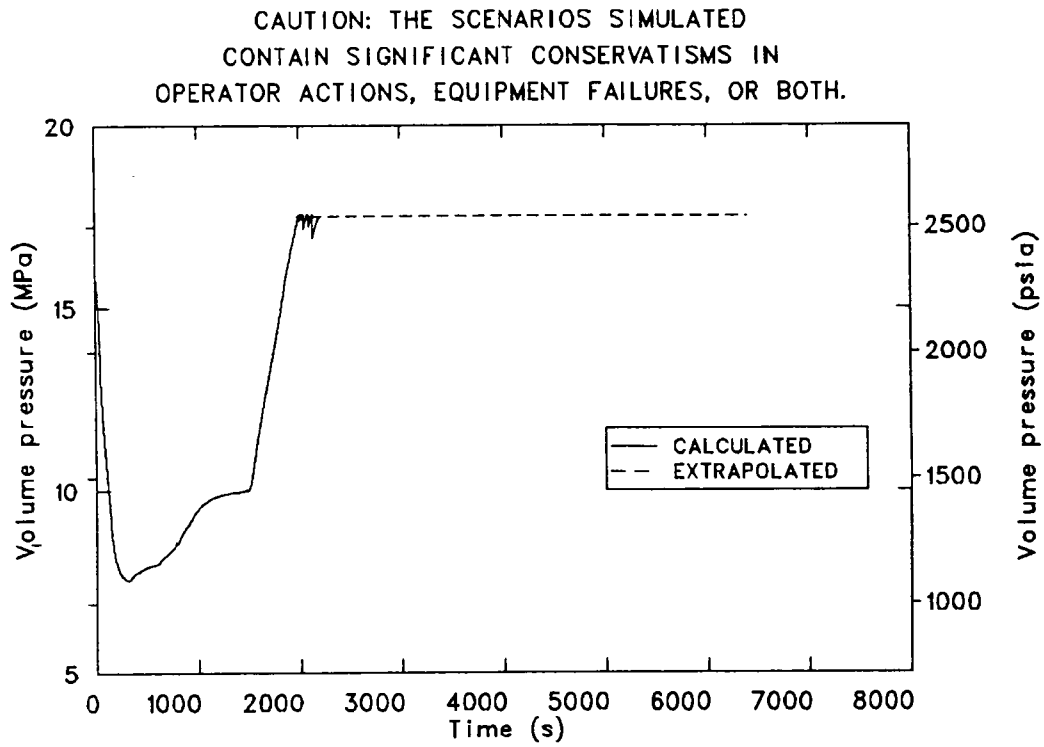

Figure 4.23. Scenario 7: Downcomer pressure profile for PZR PORV-size break at full power (break isolated at 10 min).

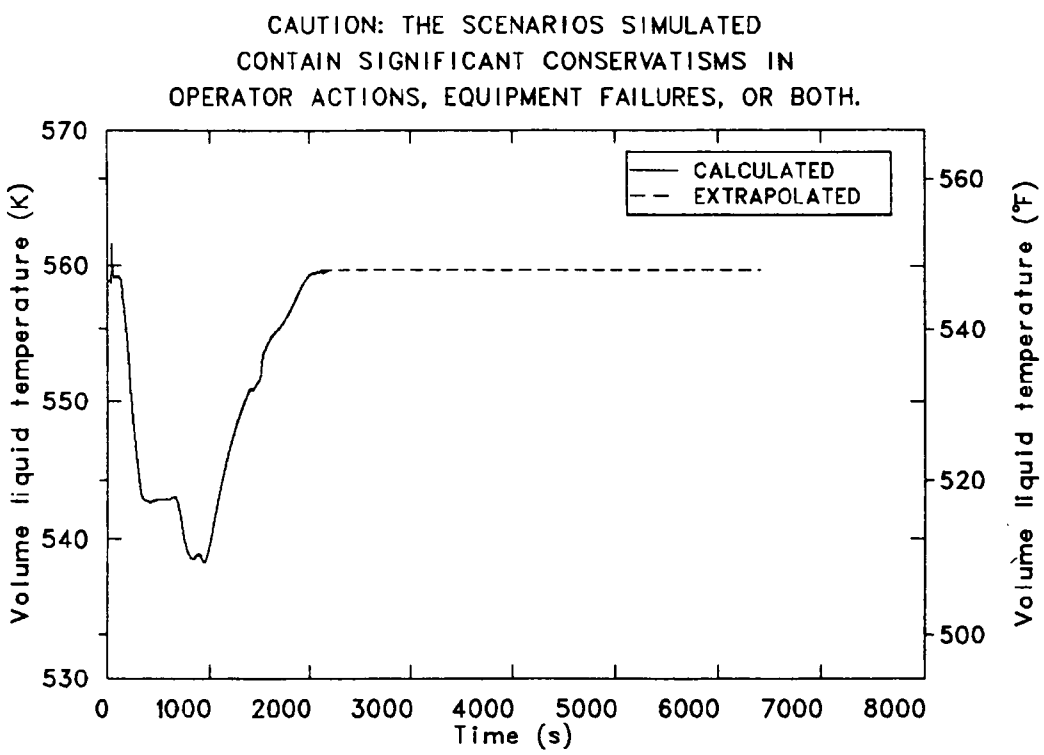

Figure 4.24. Scenario 7: Downcomer temperature profile for PZR PORV-size break at full power (break isolated at 10 min).

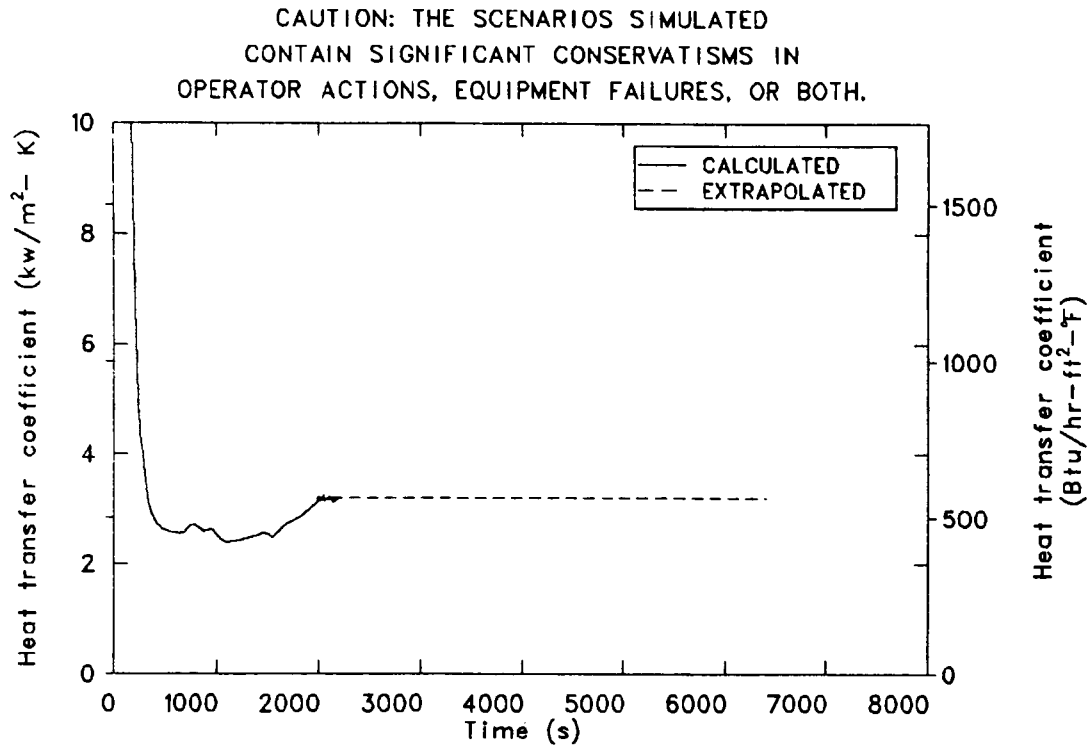

Figure 4.25. Scenario 7: Downcomer inner wall surface heat transfer coefficient for PZR PORV-size break at full power (break isolated at 10 min).

4.3.4.3. Scenario 8: 2-1/2-in. hot leg break at hot 0% power

Scenario 8 was initiated by a small hot leg break while the reactor was at hot 0% power. The break was located at the bottom of the hot leg C, near the connection to the pressurizer surge line, and had a diameter of 0.0635 m (2-1/2-in.). The operators were assumed to trip the RCPs when the primary coolant pressure dropped below 9.07 MPa (1315 psia). The operators were also assumed to control AFW flow to maintain SG narrow range levels at 40%. These requirements are summarized in Table 4.20.

The detailed sequence of events for the transient, which started when the break opened at 0.0 s, is given in Table 4.21. The backup and proportional heaters were energized within 1 s and were tripped at 6 s because of low pressurizer level. The makeup pumps delivered maximum flow after 7 s. A SIAS was generated at 21 s when the pressurizer pressure dropped to 11.93 MPa (1730 psia). This SIAS caused the following actions: the HPI pumps started, the operating MFW pump tripped, the MFW bypass valves closed, motor-driven AFW flow started, and the letdown isolation valve closed. The RCPs were tripped at 32 s to simulate an operator action taken when the pressurizer pressure dropped to 9.07 MPa (1315 psia).

Flow out the break caused the pressurizer pressure to decrease rapidly. HPI was delivered to the cold legs after 29 s, when the pressure dropped below 10.1 MPa (1470 psia), which was the shutoff head of the HPI pumps. The depressurization rate slowed at 53 s

Table 4.20. Description of Scenario 8[a]

Plant initial state[b]

Hot 0% power, 0% power after 100 hr of shutdown.

System status

Turbine: Not latched, TSVs closed
Secondary PORV: Automatic control
SDVs: Automatic control
Charging system: Automatic control
Pressurizer: Automatic control
Engineering safety features: Automatic control
PORVs: Automatic control
Reactor control: Manual
MFW: In bypass mode, manual control to provide 39% level in SGs; 1 condensate pump, 1 MFWP operating
AFW: Automatic control
MSIVs: Open, automatic control
MFIVs: Closed, automatic control

Transient initiator

A 0.0635-m-diameter (2½-in.) hole appears in the loop C hot leg.

Additional failures[c]

None.

Operator reactions to reported information

1. If SIAS is generated, operator will trip RCPs when RCS pressure reaches 1300 psig.
2. Operator will throttle AFW flow to maintain 40% SG level.

[a]The acronyms used in this table (in the order of their appearance) are: SIAS = safety injection actuation signal, RCP = reactor coolant pump, RCS = reactor coolant system, AFW = auxiliary feedwater, and SG = steam generator.

[b]Just prior to transient initiator.

[c]Operator failure or failure of equipment demanded during the transient.

when flashing began in the SG U-tubes. The secondary sides of the SGs began acting as heat sources at 57 s. The pressure remained nearly constant between 57 s and 370 s because of heat transfer, first from the SGs and then from the core. This heat transfer produced enough steam to compensate for the volumetric flow out the break. The steam production in the core dropped at ~ 370 s because of an increase in flow into the reactor vessel that caused the core to subcool. Without the steam production in the core to maintain the pressure, the break was able to depressurize the reactor coolant system.

Table 4.21. Sequence of events for Scenario 8[a]

Time (s)	Event
0	Break opens.
1	Heaters on.
6	Heaters off.
7	Maximum makeup flow.
17	Pressurizer emptied.
21	SIAS; MFW pump trips; bypass valves close; AFW initiated; letdown isolated; HPI pumps started.
29	HPI initiated.
32	RCPs tripped.
53	Flashing in U-tubes.
57	SG secondaries acting as heat source.
100	Voiding begins in upper head.
125	Voiding begins in core.
300	Upper head completely voided.
400	Core subcooled.
470	AFW off.
800	U-tubes voided.
1040	Accumulator flow initiated.
1300	Break recovered.
1650	Vessel refilled; U-tubes refilling.
1740	Calculation terminated.

[a]The acronyms used in this table (in the order of their appearance) are: SIAS = safety injection actuation signal, MFW = main feedwater, AFW = auxiliary feedwater, HPI = high-pressure injection, RCP = reactor coolant pump, and SG = steam generator.

The reactor coolant pressure dropped to the accumulator pressure of 4.65 MPa (675 psia) at 1040 s, initiating accumulator flow. The pressure remained nearly constant after 1650 s, when the reactor coolant system was refilled to the point where liquid droplets entered the U-tubes. The subsequent heat transfer from the hot SG secondaries stopped the depressurization of the reactor coolant system.

Voids first appeared in the reactor coolant system in the SG U-tubes at 53 s. The upper head began draining at 100 s and was completely voided by 300 s. Voids formed in the core at 125 s owing to a reduction in flow following the RCP trip at 32 s. An increase in core inlet flow at 370 s brought subcooled liquid into the core, causing the voids in the core to disappear by 400 s. The core was subcooled for the remainder of the calculation. The SG U-tubes were voided completely by 800 s, and by 900 s the loops had drained down to the elevation of the hot leg nozzles. Accumulator injection began at 1040 s, starting the refill of the reactor coolant system. The reactor vessel had completely refilled at 1650 s, as evidenced by the void fraction in the upper head going to zero. By 1650 s, the hot legs had nearly refilled and liquid drops were entering the U-tubes.

Following the RCP trip and the appearance of voids in the SG U-tubes, a stagnated flow regime was set up. Drainage flows and related phenomena delayed stagnation to 900 s, after which HPI and accumulator flows accounted for all remaining loop flows.

The minimum calculated downcomer fluid temperature was 329 K (133°F) and occurred at 1616 s. The calculated downcomer pressure at 1616 s was 1.77 MPa (257 psia). The calculation was terminated at 1740 s.

The calculated and extrapolated fluid pressure for Scenario 8 is shown in Figure 4.26. The extrapolated pressure was kept constant at 1.3 MPa (190 psia) until 2700 s, when the SG secondaries would have cooled to the primary saturation temperature, based on the calculated heat transfer rate at 1740 s. The pressure then decreased to below the shutoff head of the LPI pumps and remained constant thereafter. The final pressure value was determined from steady-state mass and energy balances. At steady state, the break flow equaled the sum of the HPI and LPI flows and removed core decay power. The steady-state downcomer pressure was 0.97 MPa (140 psia). The steady-state fluid temperature at the break was 320 K (120°F), and the break was covered with subcooled liquid.

The corresponding downcomer fluid temperature is shown in Figure 4.27. As with the pressure, the extrapolated temperature was constant between 1740 s, when the calculation terminated, and 2700 s, when the SG secondaries cooled to primary saturation temperature. The downcomer temperature was 6 K (10°F) above the HPI/LPI temperature because of bypass and leakage flows within the reactor vessel.

The heat transfer coefficient for the reactor vessel wall is shown in Figure 4.28. The extrapolation assumed a constant coefficient that was equal to the average calculated value during the reflooding of the U-tubes until the SG secondaries were cooled to primary saturation temperature at 2700 s. The heat transfer coefficient was then assumed to decrease to 320 W/m^2-K (58 $Btu/hr \cdot ft^2 \cdot °F$), based on a forced convection heat transfer correlation (Dittus-Boelter) and the combined HPI and LPI flow at 7200 s.

4.3.4.4. Scenario 9: 2-in. hot leg break at full power

The Scenario 9 transient was initiated from the full-power steady-state condition (nominal temperature and pressure), and all control systems were assumed to be in their automatic mode and to operate as designed. The transient initiator was a 0.0508-m-diameter (2-in.)

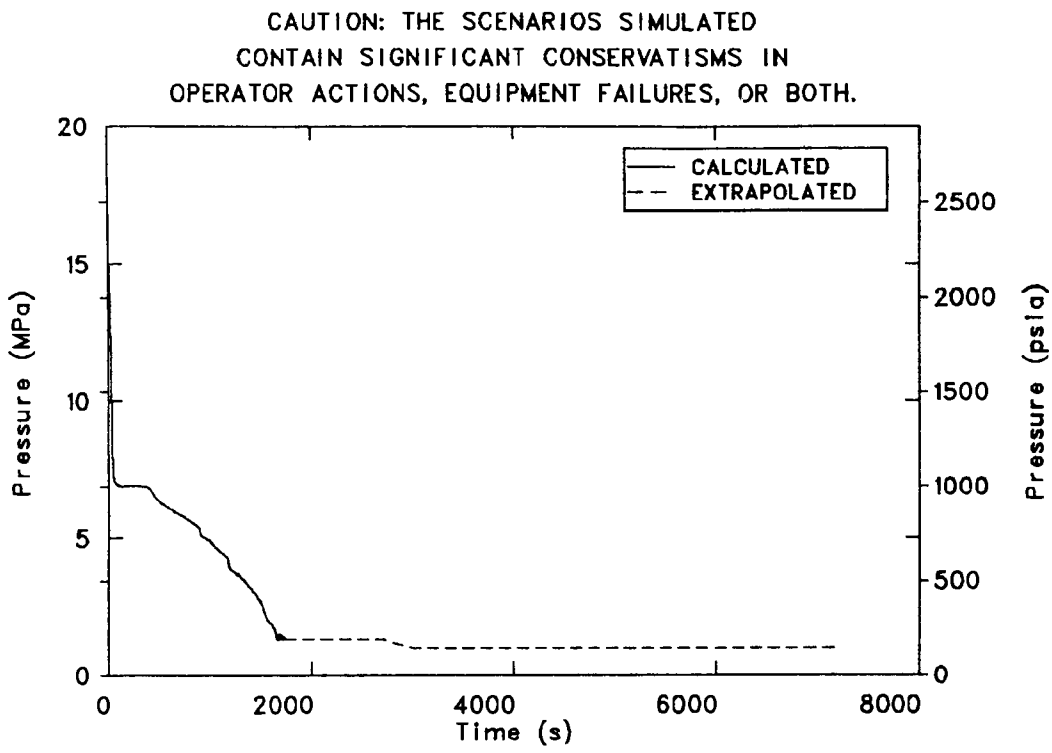

Figure 4.26. Scenario 8: Downcomer pressure profile for 2-1/2-in. hot leg break at hot 0% power.

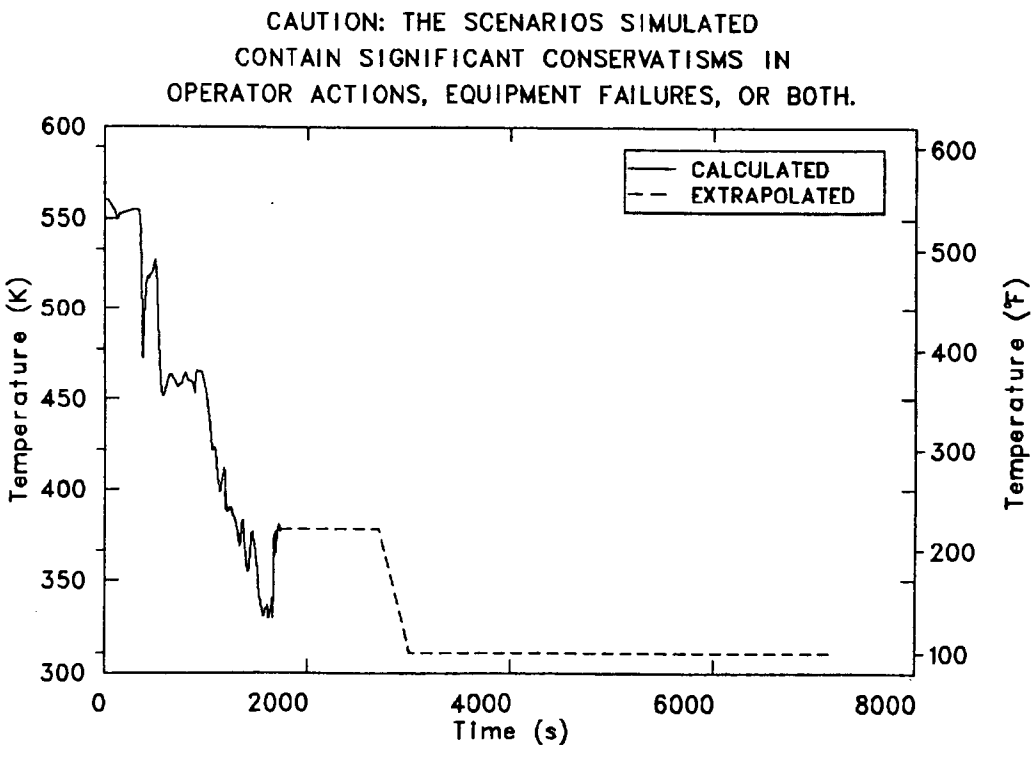

Figure 4.27. Scenario 8: Downcomer temperature profile for 2-1/2-in. hot leg break at hot 0% power.

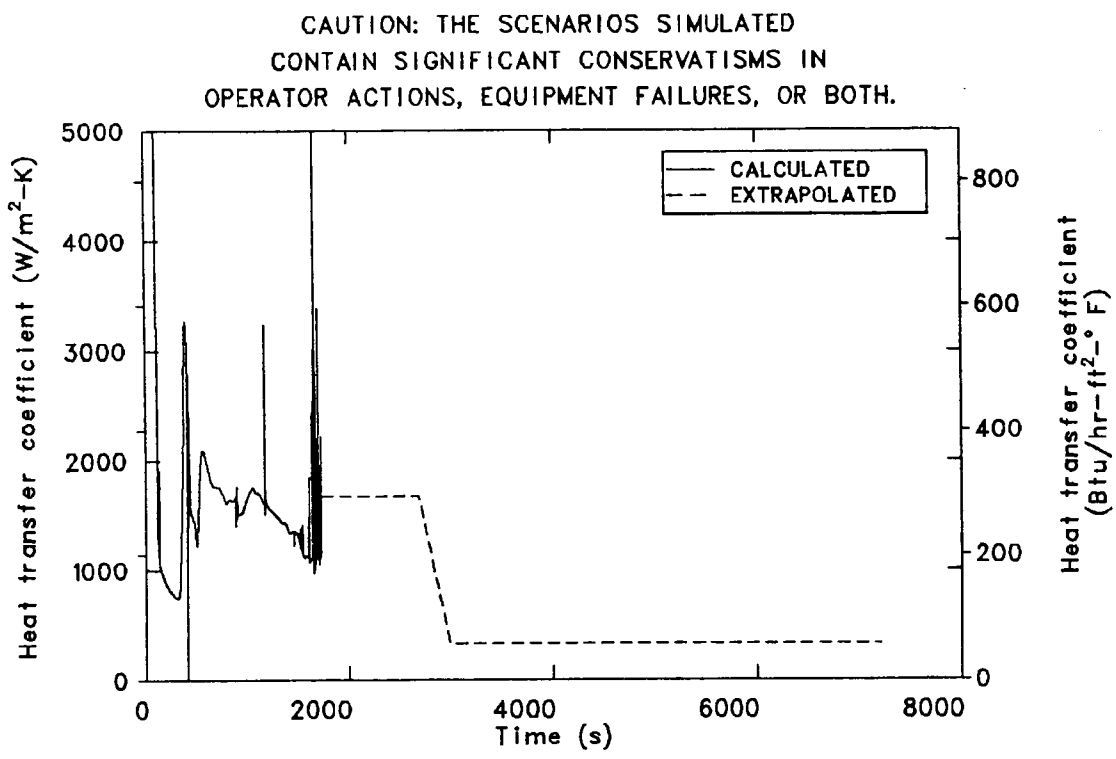

Figure 4.28. Scenario 8: Downcomer inner wall surface heat transfer coefficient for 2-1/2-in. hot leg break at hot 0% power.

hole appearing in the bottom of the horizontal section of the loop C hot leg, just upstream of the pressurizer surge line connection. As indicated in the transient scenario given in Table 4.22, if a SIAS was generated, the reactor operator was to trip the RCPs when the primary pressure reached 9.1 MPa (1315 psia). The operator was also to isolate the AFW flow 10 min into the transient. A transient scenario description is provided in Table 4.22.

Changes made to the steady-state model to initiate the small hot leg break included the addition of a break valve in the loop C hot leg connected to a time-dependent volume set at atmospheric conditions. The break components were set to represent a break at the bottom of the hot leg pipe. The valve was set to open at the initiation of the transient.

The sequence of events for the transient is given in Table 4.23. The break was assumed to occur at 0.0 s in the bottom of the loop C hot leg. The primary system rapidly depressurized. Both the proportional and backup heaters were turned on to recover the pressure. Also, as a result of the break, the pressurizer level rapidly decreased and the makeup flow increased to compensate for the lost liquid inventory.

At approximately 24 s, the reactor tripped on 2-out-of-3 reactor over-temperature ΔT signals. The TSVs closed and secondary pressures began to increase. The primary system depressurization rate increased due to the rapid reduction in core power and a lag in the response of the primary-to-secondary heat removal rate. The steam dump control system changed from load rejection mode to PTC mode at the time of the reactor trip and the SDVs opened to bring the plant average temperature down to 559 K (547°F).

Table 4.22. Description of Scenario 9[a]

Plant initial state[b]

General description: 100% power, steady state.

System status

Turbine: Automatic control
Secondary PORV: Automatic control
SDVs: Operative/automatic control
Charging system: Automatic control
Pressurizer: Automatic control
Engineering safety features: Automatic control
PORVs: Automatic control
Reactor control: Automatic
MFW: Automatic control
AFW: Automatic control
MSIVs: Open, automatic control
MFIVs: Open, automatic control

Transient initiator

A 2-in. hole appears in the hot leg.

Additional failures[c]

None.

Operator reactions to reported information

1. If SIAS is generated, operator will trip RCPs when RCS pressure reaches 1300 psig.
2. Operator will terminate AFW flow at 10 min.

[a]The acronyms used in this table (in the order of their appearance) are: PORV = power-operated relief valve, SDV = steam dump valve, MFW = main feedwater, AFW = auxiliary feedwater, MSIV = main steam isolation valve, MFIV = main feedwater isolation valve, SIAS = safety injection actuation signal, RCP = reactor coolant pump, and RCS = reactor coolant system.

[b]Just prior to transient initiator.

[c]Operator failure or failure of equipment demanded during the transient.

Table 4.23. Sequence of events for Scenario 9[a]

Time (s)	Event
0	0.0508-m-diameter (2-in.) break appears in bottom of loop C hot leg.
24	Reactor trips; TSVs close.
34	Pressurizer heaters deenergize due to low pressurizer level.
39	SI signal received on low pressurizer level; MFW pumps trip; MFW valves close; motor-driven AFW initiates.
45	Steam-driven AFW initiates.
60	HPI flow initiates.
78	RCPs trip on low primary system pressure; reactor vessel upper head starts to void.
600	All AFW flow terminates (per scenario description).
2000	Loop flows stagnated.
4056	Accumulator flow initiated.
5983	Calculation terminated.
7200	End of extrapolation.

[a]The acronyms used in this table (in the order of their appearance) are: TSV = turbine stop valve, SI = safety injection, MFW = main feedwater, AFW = auxiliary feedwater, HPI = high-pressure injection, and RCP = reactor coolant pump.

As a result of the reactor trip, the break mass flow rate increased. This increase was due primarily to an increase in the pressurizer surge line outflow rate. At the time of the reactor trip, the primary system depressurized; however, the pressurizer did not depressurize as fast owing to the energized pressurizer heaters trying to maintain 15.5 MPa (2250 psia). This increased the driving potential on the fluid in the presurizer surge line, resulting in the increased mass flow. At approximately 34 s, the pressurizer level dropped below 14.4%, the heaters were turned off, the driving potential decreased, and the break mass flow rate decreased.

At approximately 39 s, the primary system pressure had dropped to 11.9 MPa (1730 psia), actuating the SIAS. As a consequence, the MFW valves closed, isolating MFW from the SGs. The MFW pumps tripped on low flow and the heater drain flow was terminated. At the termination of MFW pump power, the motor-driven AFW system was activated and AFW began flowing into SG A and SG B.

At 45 s, 2-out-of-3 SGs had reached the low-low level signal set point and steam-driven AFW flow was initiated to the SGs. With both the motor-driven and steam-driven AFW systems operating, the levels in SG A and SG B began to increase. Primary system pressure had dropped below the HPI shutoff head by approximately 60 s, and flow from this system was established to each cold leg.

At approximately 78 s the primary system pressure had dropped below 9.1 MPa (1315 psia) and the RCPs were tripped. As the pumps coasted down, the loop flow transitioned from full flow to natural circulation. Primary system heat removal was nearly equal to decay power and the secondary system pressures began to decrease owing to the influence of the cold AFW and heat removal through the SDVs. Primary system depressurization was slowed as a result of the equalization between decay heat generation and flow out the break with vapor generation in the reactor vessel upper head (as a result of the pressure there reaching the saturation pressure of the fluid).

At approximately 248 s, the reactor vessel upper head had completely voided and voiding in the upper plenum, downcomer above the inlet annulus, and hot legs commenced. Two-phase fluid reached the break and the break mass flow drastically dropped.

At approximately 300 s, the high average temperature dropped below 559 K (547°F) and the steam dump system control changed from the PTC mode to the SPC mode. The SDVs closed, and secondary system depressurization was continued solely due to cooldown effects from the addition of cold AFW flow. Between 300 and 1000 s, vapor generation and condensation effects resulted in perturbations in the primary system pressure response as the loops and upper plenum drained. Two-phase flow periodically reaching the break also contributed to the pressure oscillations. Also contributing to the primary system pressure response during this time was the primary-to-secondary heat removal rate, which was affected by the amount of AFW the SGs were receiving. The common header for each AFW system (steam- and motor-driven) was modeled and the flow to each SG was determined by the differential pressure between the header and the SG. At times, one SG received all of the flow in a manner similar to that discussed for Scenario 6. As specified in the scenario description, the operator terminated AFW to each SG at 10 min.

By approximately 2000 s, enough voiding in all loops had occurred that natural circulation had stopped and the loops were very nearly stagnant throughout the remainder of the calculation.

At 4056 s, the primary system pressure dropped below 4.6 MPa (673 psia) and accumulator injection began. The calculation was terminated at 5983 s with the primary system slowly refilling. The primary system pressure at the termination of the calculation was 2.8 MPa (406 psia) and decreasing, and the reactor vessel downcomer fluid temperature was 333 K (141°F) and decreasing.

Extrapolations of the pressure, temperature and heat transfer coefficient in the reactor vessel downcomer to 2 hr are shown in Figures 4.29 through 4.31. At the termination of the calculation, heat removal to the SGs was nearly zero and the primary system was gaining mass due to total ECC flow exceeding break flow. It was estimated that the primary system depressurization trend at the end of the calculation would continue as shown in Figure 4.29. The resulting extrapolated pressure at 7200 s was 2.0 MPa (290 psia).

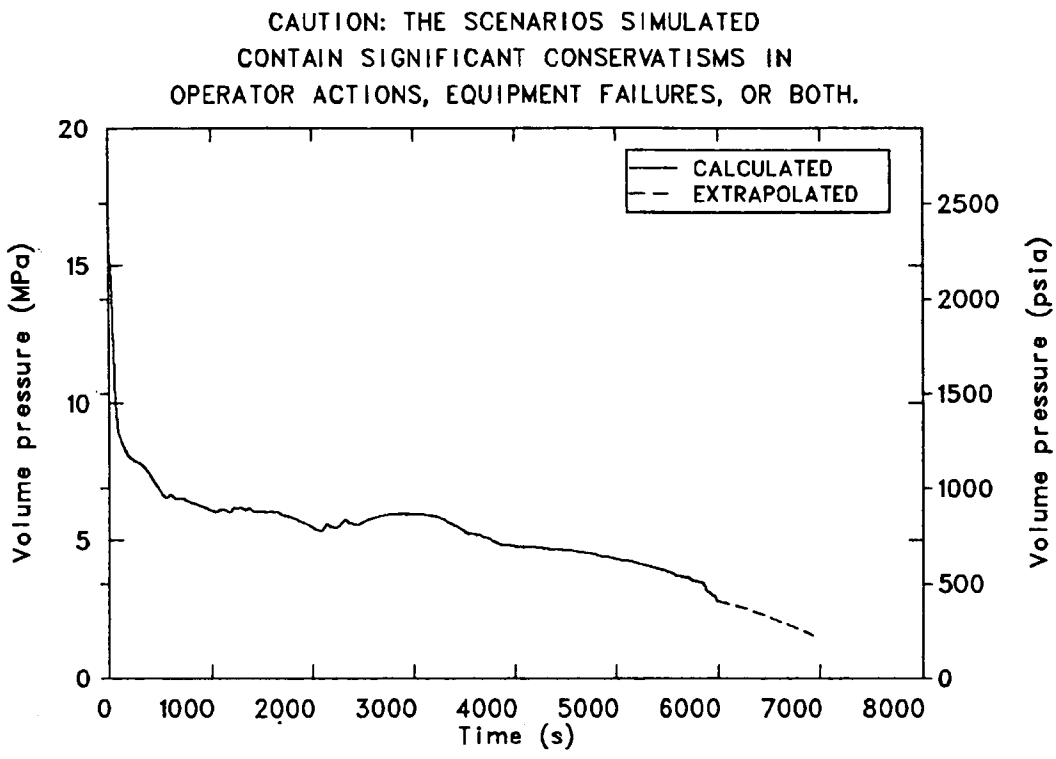

Figure 4.29. Scenario 9: Downcomer pressure profile for 2-in. hot leg break at full power.

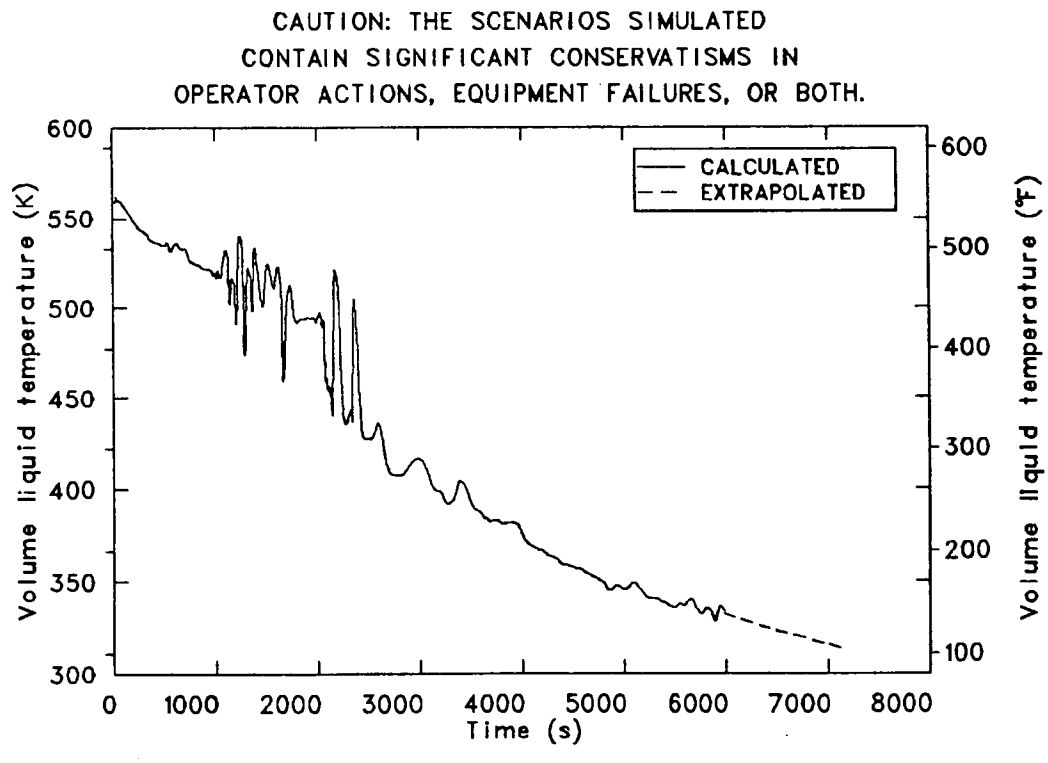

Figure 4.30. Scenario 9: Downcomer temperature profile for 2-in. hot leg break at full power.

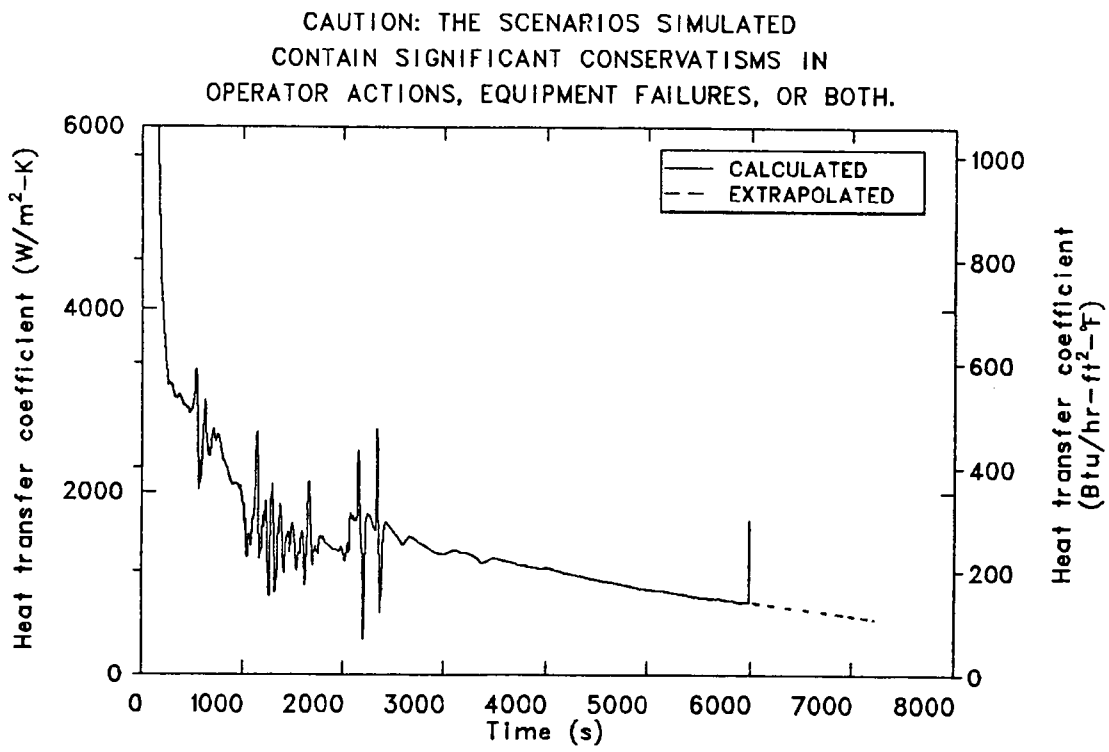

Figure 4.31. Scenario 9: Downcomer inner wall surface heat transfer coefficient for 2-in. hot leg break at full power.

The corresponding reactor vessel downcomer temperature extrapolation is shown in Figure 4.30. Again, the trend was expected to continue and the estimated temperature at 7200 s was 310 K (100°F).

The reactor vessel downcomer wall heat transfer coefficient is shown in Figure 4.31. The coefficient was declining smoothly at the end of the calculation owing to the decreasing fluid temperature in the downcomer and changing fluid properties that affect the Dittus-Boelter heat transfer correlation.

4.3.4.5. Scenario 10: PZR PORV-size break at hot 0% power

Scenario 10 was initiated with a PZR PORV-size break at a hot 0% power condition. The operator was assumed to trip the RCP power when the primary system pressure fell below 9.07 MPa (1300 psig). The scenario is summarized in Table 4.24, and the sequence of events for the transient is listed in Table 4.25.

At 0 s, a PZR PORV-size break was assumed to occur in the hot leg of the primary coolant system. As a result of the break, the primary system pressure fell, causing the pressurizer proportional heaters and the backup heaters to be powered. The pressurizer level indication fell owing to the fluid volume lost through the break, and this first caused the makeup rate to increase and then tripped off the pressurizer heater power.

Table 4.24. Description of Scenario 10[a]

Plant initial state[b]

Hot 0% power, 0% power after 100 hr of shutdown.

System status

Turbine: Not latched, TSVs closed
Secondary PORV: Automatic control
SDVs: Automatic control
Charging system: Automatic control
Pressurizer: Automatic control
Engineering safety features: Automatic control
PORVs: Automatic control
Reactor control: Manual
MFW: In bypass mode, manual control to provide 39% level in SGs; 1 condensate pump, 1 MFWP operating
AFW: Automatic control
MSIVs: Open, automatic control
MFIVs: Closed, automatic control

Transient initiator

PZR PORV-size break.

Additional failures[c]

None.

Operator reactions to reported information

1. If SIAS is generated, operator will trip the RCPs when RCS pressure reaches 1315 psig.
2. Operator will throttle AFW flow to maintain 40% SG level.

[a]The acronyms used in this table (in the order of their appearance) are: PZR PORV = pressurizer power-operated relief valve, SIAS = safety injection actuation signal, RCP = reactor coolant pump, RCS = reactor coolant system, AFW = auxiliary feedwater, and SG = steam generator.

[b]Just prior to transient initiator.

[c]Operator failure or failure of equipment demanded during the transient.

Table 4.25. Sequence of events for Scenario 10[a]

Time (s)	Event
0	PZR PORV-size break occurs.
57	Motor-driven AFW initiates.
110	HPI flow starts (1470 psia).
300	SGs become heat sources.
1500	Pressurizer fills with liquid.
7200	Sequence terminated.

[a]The acronyms used in this table (in the order of their appearance) are: PZR PORV = pressurizer power-operated relief valve, AFW = auxiliary feedwater, HPI = high-pressure injection, and SG = steam generator.

Safety injection was actuated and at ~110 s HPI flow was initiated when the pressurizer pressure dropped below 1470 psia. Since the isolation of the break was not considered during the 2-hr analysis period, the system pressure never recovered above the 1470-psia set point. As a result, HPI flow remained on throughout the 2-hr analysis period. At ~400 s, the pressure stabilized at a value of 1000 psia and remained constant until about 1500 s. At this time, the pressurizer filled with water and the flow out the break increased. This caused a gradual depressurization effect which continued for the remainder of the 2-hr analysis period. At 7200 s, the pressure had dropped to 500 psia. The pressure profile is presented in Figure 4.32.

The ECC flow was as large as or exceeded the flow through the break. Thus, the loops did not drain, the U-tubes were not voided, and natural circulation flow was maintained. The energy removed by the combination of ECC and flow through the break eventually exceeded the decreasing core decay power at about 300 s. Consequently, at this time the SGs became heat sources.

A gradual cooldown of ~100°F/hr was reached at ~100 s and continued for the remaining 2-hr analysis period, ending with a minimum temperature of 412 K (288°F). The temperature profile for the 2-hr period is presented in Figure 4.33.

It should be noted that although both motor-driven and turbine-driven AFW was initiated for the same break size at full power (see Scenario 7), only the motor-driven AFW was initiated for this hot 0% power scenario. The turbine-driven AFW was not initiated because the large initial secondary mass and the small steam production prevented the SG levels from decreasing enough to actuate the turbine-driven system.

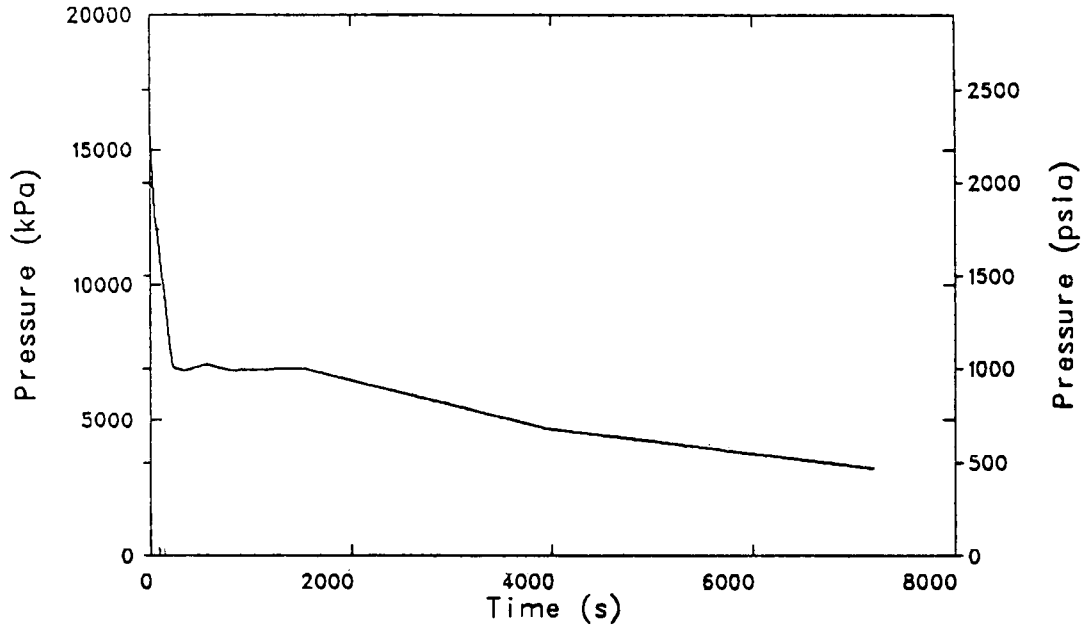

Figure 4.32. Scenario 10: Downcomer pressure profile for PZR PORV-size break at hot 0% power.

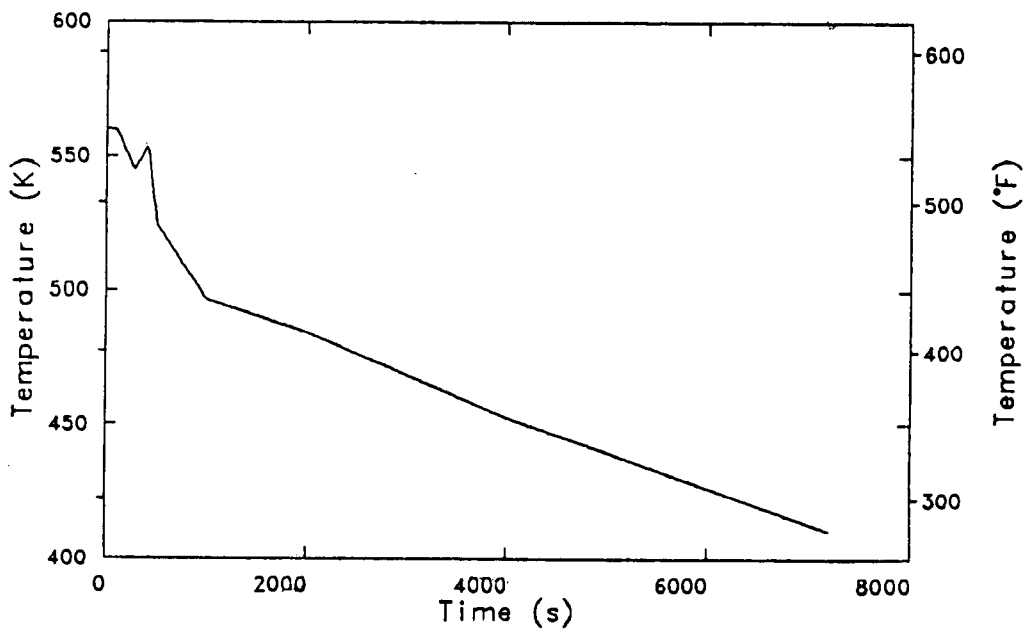

Figure 4.33. Scenario 10: Downcomer temperature profile for PZR PORV-size break at hot 0% power.

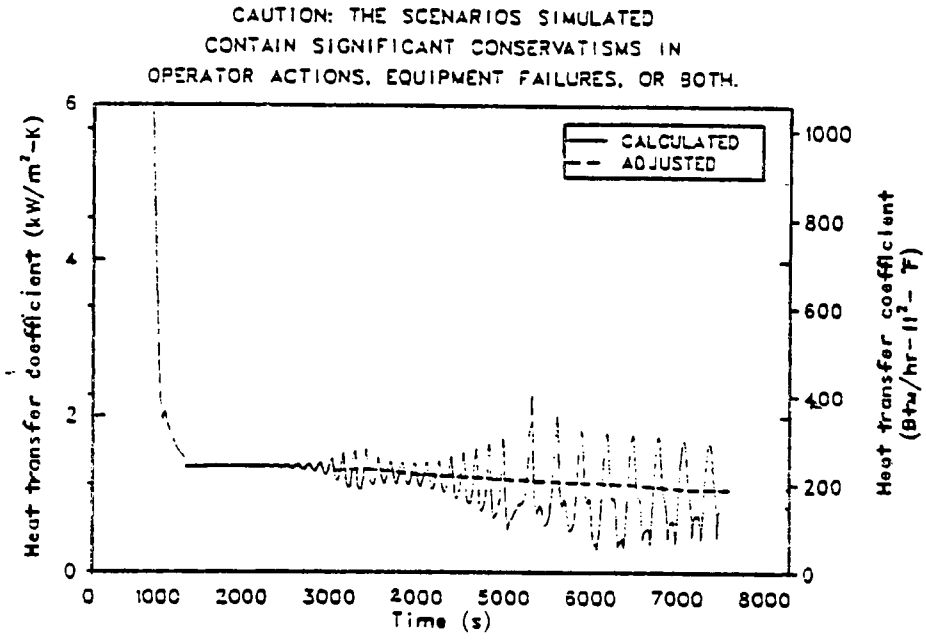

Figure 4.34. Scenario 10: Downcomer inner wall surface heat transfer coefficient for PZR PORV-size break at hot 0% power.

A plot of the downcomer wall inside surface heat transfer coefficient is shown in Figure 4.34. The dashed lines indicate the best estimate response as determined through the use of sensitivity calculations.

4.3.5. Steam Generator Tube Rupture Calculations

The double-ended rupture of a single tube in a SG represents a small primary break where the coolant loss is to a pressurized space (i.e., to the SG secondary system). The involvement of both primary and secondary systems is of interest in PTS, especially if loop flow stagnation occurs. This class of transient was examined with two scenarios involving single tube ruptures at hot 0% power and full power.

4.3.5.1. Scenario 11: SG tube rupture at hot 0% power

Scenario 11 was initiated with a double-ended rupture of a single tube in SG A with the reactor at hot 0% power. The break was located at the tube sheet on the cold leg end of the tube. Operator actions were assumed to trip the RCP power when the primary system pressure fell below 9.07 MPa (1315 psia) (if a SIAS was generated) and to restart the RCPs if subcooling, pressure, and pressurizer level criteria are later satisfied. The operator was also assumed to throttle AFW to maintain the 40% SG narrow-range levels. These requirements are summarized in Table 4.26.

The sequence of events for Scenario 11 is listed in Table 4.27. At 0 s, a single tube in SG A was assumed to have ruptured at the tube sheet on the cold leg end. Flow through both the hot leg and the cold leg break paths was friction dominated; that is, the flow rates

were determined by the flow losses of the paths and not by choking phenomena. Both paths passed single-phase liquid throughout the calculation.

As a result of the break, the primary system pressure fell, causing the pressurizer proportional heaters to be powered at 1 s and backup heaters to be powered at 8 s. The pressurizer level indication fell owing to the fluid volume lost through the break, and this first caused the makeup rate to increase and then tripped off pressurizer heater power. Because the pressurizer level indication did not recover, the RCP restart criteria (see operator actions in Table 4.26) were never achieved.

At 276 s, a SIAS was generated owing to low pressurizer pressure. As a result of the SIAS, the following actions occurred: the MFW bypass valves were closed; the MFW pump was tripped; the MFW pump recirculation flow was terminated; the motor-driven AFW was initiated and controlled to each SG to maintain 40% narrow-range level indication; HPI and LPI pumps were started; and letdown was isolated. (Turbine-driven AFW was not initiated for this transient since it required 2-out-of-3 low SG level indications.)

Following initiation of HPI at 366 s, the total HPI and charging flow exceeded the break flow by a small amount throughout the remainder of the transient. During this period, the primary system pressure was stabilized slightly below the HPI shutoff head with injection volumetric flow just balanced by break volumetric flow, the pressurizer virtually empty, and the pressurizer surge line flow virtually zero.

SG A remained pressurized to the steam dump set point as a result of the broken tube break flows and became a primary system heat source at 511 s. Because the SG A level was elevated, no AFW was delivered to SG A. SG B and SG C secondary pressures remained elevated until 593 and 703 s, respectively, when these SGs became primary system heat sources. AFW was delivered to SG B from 276 s to 543 s and to SG C from 276 to 617 s. AFW to these SGs was terminated when their narrow range levels exceeded 40%.

At 625 s, the primary system pressure declined to 9.07 MPa (1315 psia) and power to all RCPs was tripped off. The ensuing pump coastdown ended at 794 s, when the pump rotors had stopped. Following the RCP coastdown, smooth natural circulation was established at around 1300 s. Owing to the effects of the broken SG tube, the loop A cold leg natural circulation flow rate was about one-third that in loops B and C from about 1300 to 2200 s. After this time, flow oscillations in all three loops were observed in the calculation. These oscillations are due to code characteristics which are extensively discussed in the INEL report.[1] The stagnation and flow stratification conditions forming at this time are discussed in Section 4.4.

A sensitivity calculation was performed by relocating the loop A HPI from the cold leg to the top of the downcomer, thus cutting out the model nodes responsible for the oscillations. The sensitivity calculation ran over its entire period (5300 s to 6500 s) without flow oscillations. The sensitivity case results were used to generate the best estimate of plant responses for this sequence.

Table 4.26. Description of Scenario 11[a]

Plant initial state[b]

Hot 0% power, 0% power after 100 hr of shutdown.

System status

Turbine: Not latched, TSVs closed
Secondary PORV: Automatic control
SDVs: Automatic control
Charging system: Automatic control
Pressurizer: Automatic control
Engineering safety features: Automatic control
PORVs: Automatic control
Reactor control: Manual
MFW: In bypass mode, manual control to provide 39% level in SGs; 1 condensate pump, 1 MFWP operating
AFW: Automatic control
MSIVs: Open, automatic control
MFIVs: Closed, automatic control

Transient initiator

SG tube rupture on the cold leg side of tube sheet of SG A.

Additional failures[c]

None.

Operator reactions to reported information

1. If SIAS is generated, the operator will trip the RCPs when RCS pressure reaches 1300 psig.
2. Operator will restart RCPs 10 min after *all* the following criteria are met:
   A. > 40°F subcooled.
   B. Pressurizer level ⩾ 20% or increasing.
   C. RC pressure > 325 psig.
3. Operator will throttle AFW flow to maintain 40% SG level.

[a]The acronyms used in this table (in the order of their appearance) are: SG = steam generator, SIAS = safety injection actuation signal, RCP = reactor coolant pump, RCS = reactor coolant system, RC = reactor coolant, and AFW = auxiliary feedwater.

[b]Just prior to transient initiator.

[c]Operator failure or failure of equipment demanded during the transient.

Table 4.27. Sequence of events for Scenario 11[a]

Time (s)	Event
0	Tube rupture occurs.
1	Proportional pressurizer heaters powered; makeup rate starts increasing.
8	Backup pressurizer heaters powered.
64	Pressurizer heaters depowered on low level.
68	Makeup rate reaches maximum capacity.
276	SIAS generated by low pressurizer pressure (1730 psia); FW bypass valves closed; MFW pump trips; motor-driven AFW initiates; HPI and LPI pumps start; letdown isolated.
366	HPI flow starts (1470 psia).
625	RCPs trip (1315 psia).
794	RC pump rotors stopped.
1332	Affected SG separator flooded (void = 0).
1530	Liquid flow to affected SG steam line begins.
2500	Affected SG liquid solid.
7200	Calculation terminated; best estimate minimum downcomer temperature obtained [465 K (378°F)].

[a]The acronyms used in this table (in the order of their appearance) are: SIAS = safety injection actuation signal, FW = feedwater, MFW = main feedwater, AFW = auxiliary feedwater, HPI = high-pressure injection, LPI = low-pressure injection, RCP = reactor coolant pump, RC = reactor coolant, and SG = steam generator.

Figure 4.35 shows the reactor vessel downcomer fluid pressure. Very little change in pressure was observed as a result of damping out the loop flow oscillations. At 7200 s, the best estimate pressure is 9.624 MPa (1396 psia).

Figure 4.36 shows the reactor vessel downcomer fluid temperature and Figure 4.37 the downcomer wall inside surface heat transfer coefficient. In both figures the dashed lines indicate the best estimate responses as determined through the use of the sensitivity calculation. At 7200 s, the best estimate downcomer fluid temperature is 465 K (378°F).

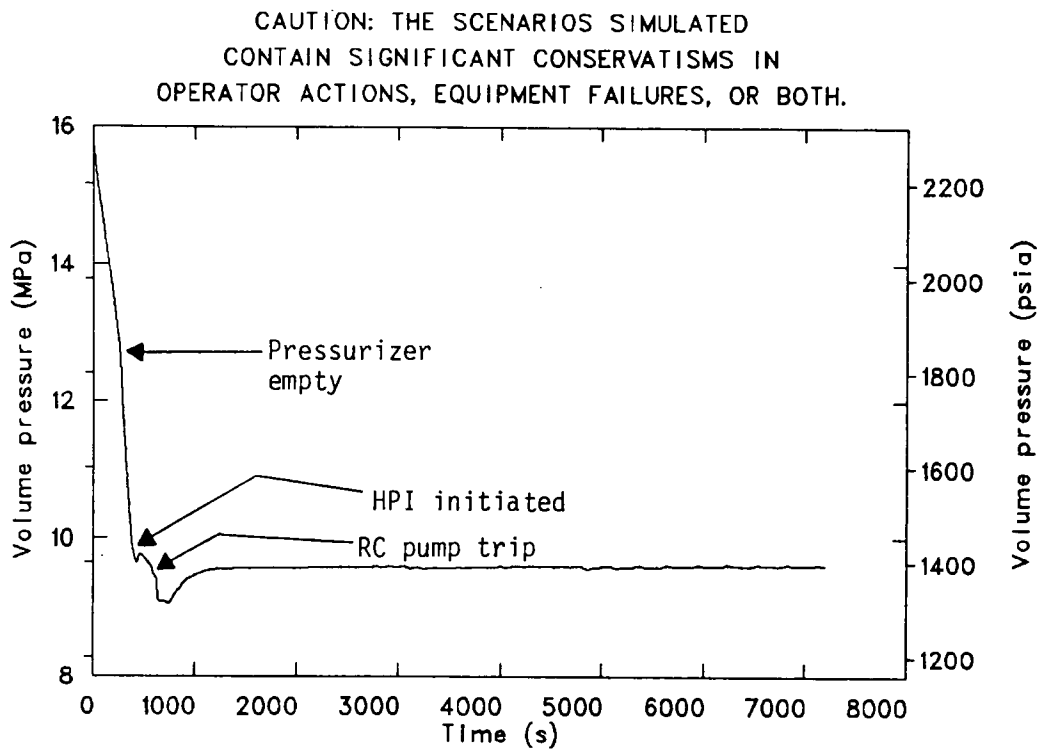

Figure 4.35. Scenario 11: Downcomer pressure profile for SG tube rupture at hot 0% power.

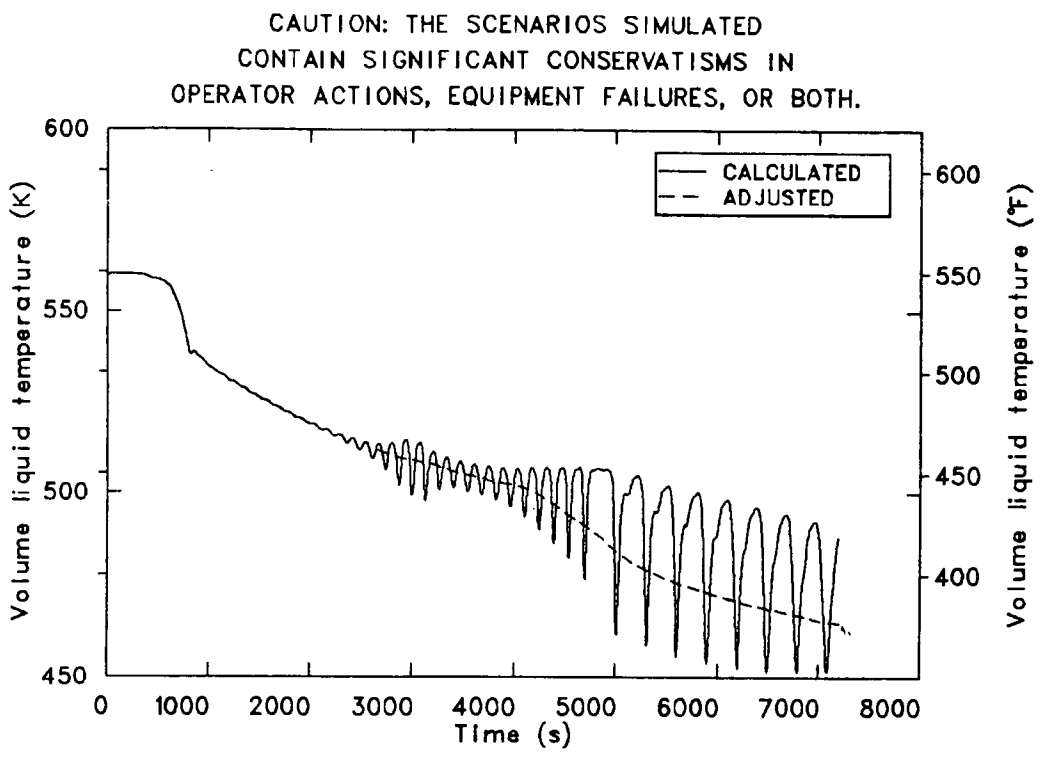

Figure 4.36. Scenario 11: Downcomer temperature profile for SG tube rupture at hot 0% power.

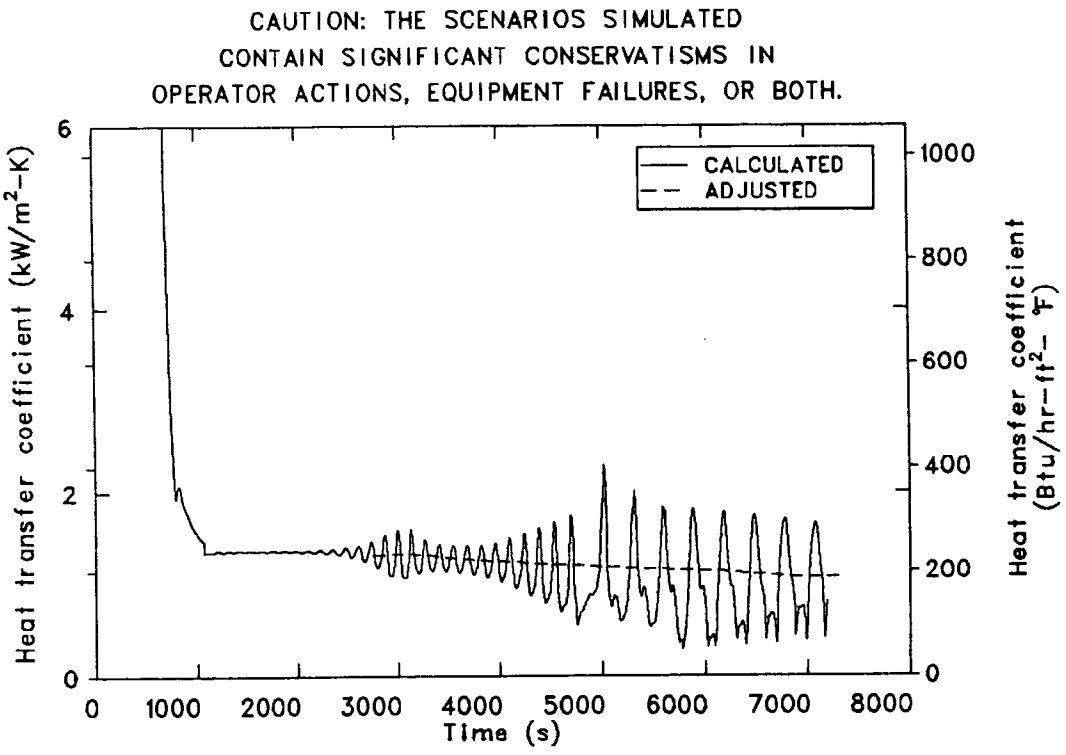

Figure 4.37. Scenario 11: Downcomer inner wall surface heat transfer coefficient for SG tube rupture at hot 0% power.

4.3.5.2. Scenario 12: SG tube rupture at full power

Scenario 12 was also initiated with a double-ended break occurring in a single tube in the cold leg side of SG A, this time, however, with the reactor at full power steady state (nominal temperature and pressure). All system controls were assumed to be under automatic control and to operate as designed. It was assumed that the operator would (1) trip the RCPs when the primary pressure fell below 9.1 MPa (1315 psia) (if a SIAS is generated) and (2) throttle AFW flow to maintain a 40% narrow range level in each of the SGs. (It should be noted that these actions are not the normal procedures the operator would take in this type of transient.)

The requirements for Scenario 12 are summarized in Table 4.28, and the sequence of events for the transient is listed in Table 4.29. The double-ended rupture of a single tube was assumed to occur at time zero. Upon rupture of the tube, the primary system began to depressurize. The pressurizer proportional and backup heaters were automatically initiated as a result of the depressurization in an effort to recover primary system pressure. Also, as a result of the break, the pressurizer liquid level began to decrease, resulting in an increase in the makeup flow rate to recover the level. At approximately 89 s, high turbine over-temperature ΔT signals in the reactor protection system were generated and the turbine governor valves began to run back. Between 95 and 114 s, load rejection set points of 15, 35, and 55% were reached and SDV banks 1, 2, and 3 were opened respectively.

Table 4.28. Description of Scenario 12[a]

Plant initial state[b]

100% power, steady state.

System status

Turbine: Automatic control
Secondary PORV: Automatic control
SDVs: Automatic control
Charging system: Automatic control
Pressurizer: Automatic control
Engineering safety features: Automatic control
PORVs: Automatic control
Reactor control: Automatic
MFW: Automatic control
AFW: Automatic control
MSIVs: Open, automatic control
MFIVs: Open, automatic control

Transient initiator

SG tube rupture on the cold leg side of tube sheet of SG A.

Additional failures[c]

None.

Operator reactions to reported information

1. If SIAS is generated, operator will trip the RCPs when RCS pressure reaches 1300 psig.
2. Operator will throttle AFW flow to maintain 40% SG level.

[a]The acronyms used in this table (in the order of their appearance) are: SG = steam generator, SIAS = safety injection actuation signal, RCP = reactor coolant pump, RCS = reactor coolant system, and AFW = auxiliary feedwater.

[b]Just prior to transient initiator.

[c]Operator failure or failure of equipment demanded during the transient.

At 114 s into the transient, reactor over-temperature signals tripped the reactor. Primary system pressure rapidly decreased as a result of the decrease in core power at reactor trip and a delay in the reduction of primary to secondary heat removal rate. The TSVs closed as a result of the reactor trip, and secondary pressure rapidly increased to approximately 6.9 MPa (1000 psia). The steam dump system switched from load rejection control to the PTC mode due to the reactor trip. The SDVs closed as a result of an overswing of a lead-lag controller in the PTC system logic, but opened thereafter and modulated to bring

Table 4.29. Sequence of events for Scenario 12[a]

Time (s)	Event
0	Single tube rupture in SG A occurs; primary system begins to depressurize.
10	Pressurizer heaters turn on.
89	2-out-of-3 turbine high over-temperature ΔT signals; turbine governor valves begin to run back.
95	15% load rejection set point reached and SDV bank 1 opens.
101	35% load rejection actuation set point reached and SDV bank 2 opens.
108	55% load rejection actuation set point reached and SDV bank 3 opens.
114	Reactor tripped on 2-out-of-3 reactor over-temperature ΔT signals; TSVs close; steam dump system switches to PTC mode.
130	Pressurizer heaters trip off; MFW regulating valves close on reactor trip and low T_{avg} signal.
137	MFW pumps trip; motor-driven AFW system turns on.
199	SIAS received due to low pressurizer pressure.
275	Pressurizer and pressurizer surge line empty.
335	Pressure drops below HPI pump head and HPI flow is established; AFW to SG A terminates.
370	Primary depressurization stops.
560	Total AFW flow goes to SG C for about 50 s.
600	Primary pressure increase begins.
1130	Plant T_{avg} drops below 559 K (547°F) and steam dump system switches from PTC to SPC; AFW flow to SG C increases.
1160	Level in SG C reaches 40% narrow range level and AFW flow to that SG is terminated.
1200	Level in SG B reaches 40% narrow range level and AFW flow to that SG is terminated.
2400	Transient terminated; primary system pressure stable at 9.6 MPa (1400 psia) and vessel downcomer temperature stable at 560 K (549°F); secondary heat removal equal to core power and total primary inlet flow equals break flow.

[a]The acronyms used in this table (in the order of their appearance) are: SG = steam generator, SDV = steam dump valve, TSVs = turbine stop valve, PTC = plant trip control, MFW = main feedwater, AFW = auxiliary feedwater, SIAS = safety injection actuation signal, HPI = high-pressure injection and SPC = steam pressure control.

the primary system average temperature down to 559 K (547°F). After the reactor trip, the primary system pressure continued to decrease at a slower rate due to the reduction in the primary system heat removal rate.

At 130 s, the pressurizer liquid level decreased below 14.4% of the measured level range and the pressurizer proportional and backup heater power was terminated. Also, at approximately this time the MFW regulating valves were closed due to the reactor trip and a low average temperature signal. Approximately 7 s later, the MFW pumps tripped and the motor-driven AFW system was initiated. Turbine-driven AFW was not initiated, as it requires 2-out-of-3 low SG level indications.

At approximately 200 s, the pressure in the pressurizer dropped below 11.93 MPa (1730 psia), generating a SIAS which energized the HPI pumps. By approximately 275 s, the pressurizer and pressurizer surge line had emptied, the primary depressurization rate increased, and the mass flow rate out the break decreased.

By approximately 335 s, the primary pressure had dropped below the HPI pump head and HPI flow was initiated. Upon initiation of HPI, the total mass flow into the primary system equaled the break mass flow rate. The primary depressurization was terminated at approximately 9.4 MPa (1363 psia).

Between 620 and 1130 s, the primary system pressure had increased to approximately 9.6 MPa (1400 psia) and was stable owing to the total primary inflow equaling the break flow and the total energy being removed from the primary system (including the energy removed at the break) equaling the core decay power. Also, the loop mass flow rates were very nearly equal during this time, whereas before 620 s, the loop C mass flow rate was higher as a result of emptying the pressurizer.

At approximately 1130 s, the high average temperature dropped below 559 K (547°F), the steam dump system switched from the PTC mode to the SPC mode, and the SDVs closed. While under SPC, the SDVs modulate open if the secondary pressure increases to 7.0 MPa (1020 psia). As a result of the SDV closure, the secondary pressure in SG A and SG B increased; however, the pressure in SG C decreased owing to condensation effects from AFW entering the secondary system. Preferential AFW flow to SG C occurred because of the lower pressure, and therefore the level in SG C increased faster, reaching the 40% cutoff level at approximately 1160 s. The AFW flow was then terminated from SG C and SG B received all of the AFW flow. The effect of preferential AFW flow to one or the other SG was to increase the overall primary heat removal rate which, in turn, resulted in a depressurization of the primary side and an increase in HPI flow. During this time the cold leg and reactor vessel downcomer temperatures also decreased owing to the increased cold HPI flow, and more energy was removed from the primary system than was being generated by decay heat.

At approximately 1200 s, the level in SG B reached 40% of the narrow range level and AFW flow to SG B was terminated; thus all feed flow to the SGs was terminated.

The primary system pressure continued to increase until approximately 1700 s. At this time, a balance between the break flow rate and the total primary inflow existed. Also, a

balance between the total primary system heat removal (heat transfer across the SG tubes and energy removal at the break) and core decay power existed. Because of a balance in these thermal-hydraulic mechanisms, the primary system pressure increase was terminated and the pressure remained stable at 9.6 MPa (1400 psia) to the end of the calculation at 2400 s.

The calculated and extrapolated downcomer pressure is shown in Figure 4.38. The prior stability of the pressure and the absence of predictable phenomena to change the pressure suggested that the final calculated pressure of 9.6 MPa (1400 psia) would persist to 7200 s.

By the end of the calculation the downcomer temperature was stable at approximately 560 K (549°F) and under the control of the steam dump system. The temperature, as shown in Figure 4.39, was assumed to persist at this value to 2 hr.

Since the RCPs never tripped, the downcomer heat transfer coefficient in Figure 4.40 was assumed to remain constant at about 37 $kW/m^2 \cdot K$ (6500 $Btu/hr \cdot ft^2 \cdot °F$) to the end of the transient.

4.3.6. Loss of Heat Sink Calculations

4.3.6.1. Scenario 13: Loss of heat sink with primary system feed-and-bleed recovery

Scenario 13 was initiated by the tripping of both MFW pumps. All AFW pumps were assumed to fail to start; all other automatic systems were assumed to operate as designed. The operator was assumed to trip the RCPs when any SG wide range level indicator fell below 5% of range. The operator was also assumed to open both PZR PORVs subsequent to the RCP trip when the hot leg temperature rose by 5°F.

The requirements for Scenario 13 are summarized in Table 4.30, and the sequence of events for the transient is listed in Table 4.31. The sequence was run to 8100 s to partially account for the undercooling portion of the scenario and thus give a larger segment of the overcooling phase of the scenario.

The downcomer temperature increased at the start of the transient owing to a combination of secondary pressure increase and decreasing MFW flow. The increase in secondary pressure was due to the closing of the TSV, which was initiated by the tripping of the MFW pumps. The constant downcomer temperature during the first 3600 s was the result of the PTC system response, which was designed to control the SDVs to bring the primary average temperature down from the full power value (575 K, 575.4°F) to the no-load set point (559.3 K, 547°F).

The RCPS were tripped at 3626 s when the WR level in SG A had decreased to 5% of full range. The reduction in core flow resulted in an increase in the temperature rise across the core, which in turn caused the hot leg temperatures to increase. This temperature response continued until 3718 s when the PZR PORVs were opened and

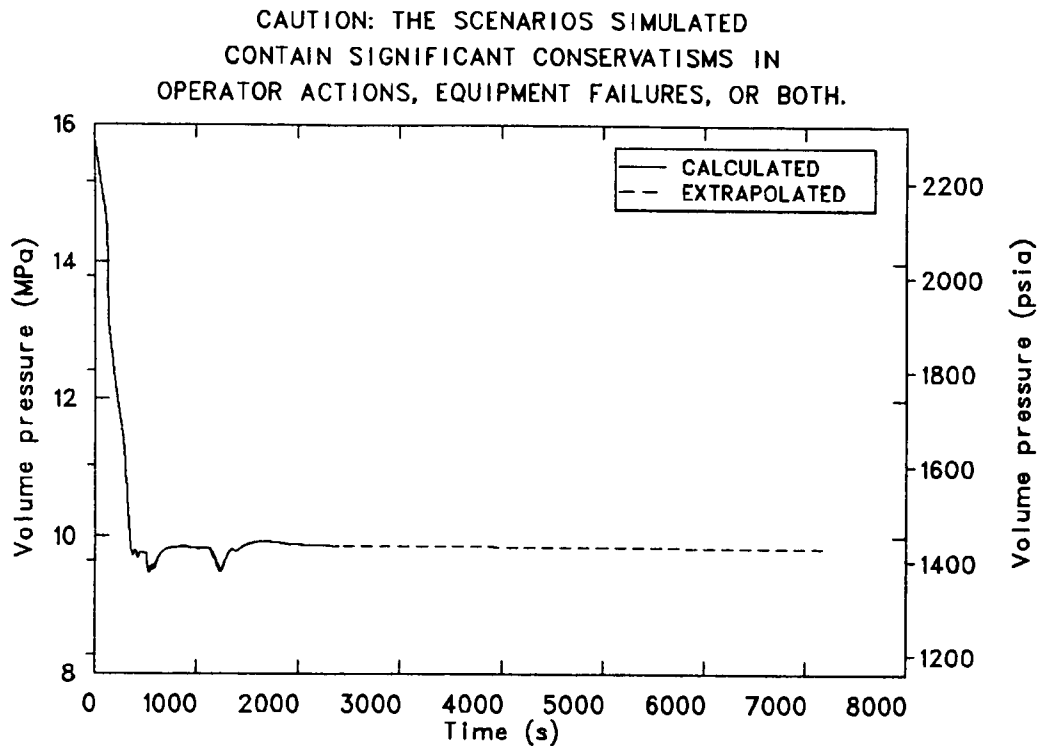

Figure 4.38. Scenario 12: Downcomer pressure profile for SG tube rupture at full power.

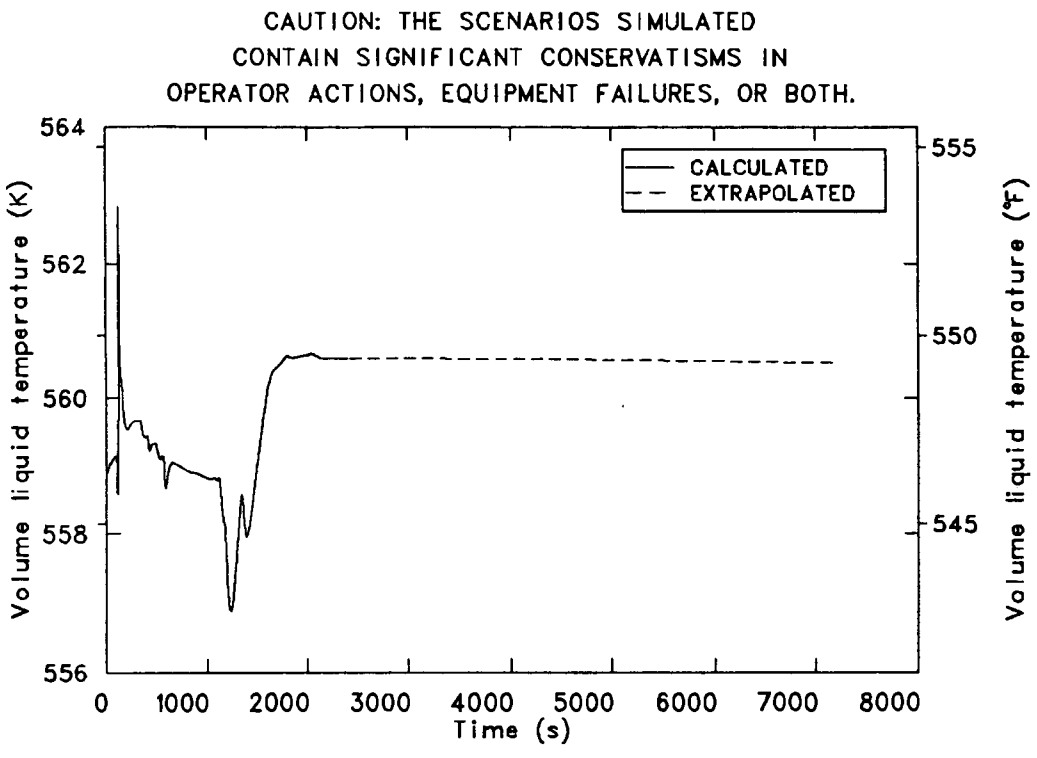

Figure 4.39. Scenario 12: Downcomer temperature profile for SG tube rupture at full power.

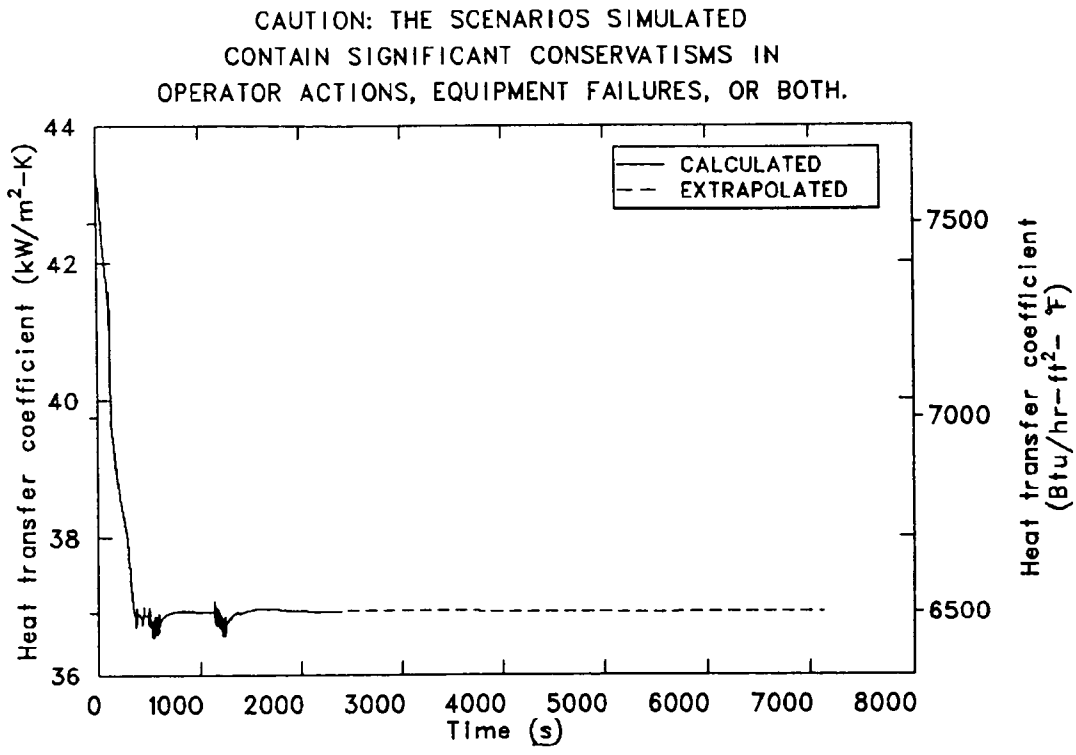

Figure 4.40. Scenario 12: Downcomer inner wall surface heat transfer coefficient for SG tube rupture at full power.

HPI initiated. These actions were taken, per the scenario description, when the loop A hot leg temperature had increased by 2.78 K (5°F). Initiation of HPI was assumed to require a manual SIAS, which, in turn, caused letdown to be isolated.

The opening of the PORVs caused a rapid depressurization of the primary to 6.75 MPa (979 psia). The depressurization of the primary system resulted in reversed flow at 3818 s, which was halted at 3878 s when the SG tube bundles and reactor vessel upper plenum and head had been voided. A 0.70 MPa (102 psi) pressure increase between 3878 s and 3962 s was due to (a) the collapse of voids as the primary system refilled, and (b) the resumption of natural circulation through the SG tube bundles. The resumption of natural circulation resulted in increased heat transfer to the SG secondaries, which caused the primary system to cool, and hence, to depressurize.

HPI was initiated at 3718 s, but no fluid was injected into the cold legs until the primary system pressure had decreased to the HPI shutoff head (10.135 MPa, 1470 psia) at 3767 s. The HPI and CVCS filled all but the upper volume of the pressurizer by 3878 s. The pressurizer upper head was never water solid due to the opened PORVs, which were capable of handling the total system inflow.

Temperatures in the vessel downcomer decreased between 3768 and 3817 s owing to the HPI fluid from the three cold legs. The increase in temperature between 3817 s and 3937 s was the result of opening the PORVs, thereby causing reverse circulation in the

Table 4.30. Description of Scenario 13[a]

Plant initial state[b]

100% power, steady state.

System status

Turbine: Automatic control
Secondary PORV: Automatic control
SDVs: Automatic control
Charging system: Automatic control
Pressurizer: Automatic control
Engineering safety features: Automatic control
PORVs: Automatic control
Reactor control: Automatic
MFW: Automatic control
AFW: Automatic control
MSIVs: Open, automatic control
MFIVs: Open, automatic control

Transient initiator

Both MFW pumps trip simultaneously.

Additional failures[c]

AFW pumps fail to start on demand.

Operator reactions to reported information

1. Operator trips RCPs when 1/3 SG wide range (WR) levels decrease below 5%.
2. Operator initiates safety injection (HPI) and opens the pressurizer PORVs after RCP trip and when Loop A hot leg temperature has increased 5°F.

[a]The acronyms used in this table (in the order of their appearance) are: MFW = main feedwater, AFW = auxiliary feedwater, RCP = reactor coolant pump, SG = steam generator, HPI = high-pressure injection, and PORV = power-operated relief valve.

[b]Just prior to transient initiator.

[c]Operator failure or failure of equipment demanded during the transient.

three loops, which resulted in core fluid circulating back through the downcomer. The resumption of positive circulation at 3937 s resulted in a rapid temperature decrease due to the HPI fluid entering the downcomer. This decrease ended after the fluid in the cold legs was flushed through the downcomer, followed by the warmer fluid from the hot legs.

The constant downcomer temperature response between 4090 s and 4444 s was the result of nearly constant flow conditions and heat additions to the primary coolant from

Table 4.31 Sequence of events for Scenario 13[a]

Time (s)	Event
0	Transient initiated by manual tripping of MFW pumps; reactor and turbines trips; PTC initiated.
5	MFW valves close (feed train isolated from SGs).
100	Primary pressure decreases to 14.27 MPa (2070 psia).
650	Primary pressure restored to 15.51 MPa (2250 psia).
1500	SG C FW header blowdown begins.
1700	SG B FW header blowdown begins.
1900	SG C FW header blowdown completed.
2100	SG B FW header blowdown completed.
3626	SG A WR level reaches 5%; RCPs manually tripped.
3718	Loop A hot leg temperature increased by 2.78 K (5°F); PZR PORVs open and SIAS trips on.
3767	Primary system pressure reaches HPI shutoff head.
3817	PTC switches to SPC.
3830	Vessel upper head begins voiding.
3857	Natural circulation in loops degraded due to combination of voiding in hot leg and PORV flow.
3878	Pressurizer indicated level reaches 100%.
3937	Natural circulation resumes.
3960	Reactor vessel upper head completely voided.
4093	SG B secondary becomes primary system heat source.
4096	SG A secondary becomes primary system heat source.
4100	SG C secondary becomes primary system heat source.
4444	Natural circulation ends in loop C.
5500	SG A FW header blows down.
6000	HPI and CVCS inflow exceeds PORV outflow.
6026	Condensation depressurization in loop C pump suction.
7159	Condensation depressurization in reactor vessel upper downcomer.
7160	Accumulator injection initiated.
8100	Downcomer conditions (at top of downcomer): pressure = 4.04 MPa; temperature = 468.6 K.

[a]The acronyms used in this table (in the order of their appearance) are: MFW = main feedwater, PTC = plant trip control, SG = steam generator, FW = feedwater, WR = wide range, RCP = reactor coolant pump, PZR PORV = pressurizer power-operated relief valve, SIAS = safety injection actuation signal, HPI = high-pressure injection, SPC = steam pressure controll, CVCS = chemical and volume control system, and PORV = power-operated relief valve.

the core and SG secondaries that were offset by heat removal due to the open PORV and the HPI fluid. The heat transfer from the secondary to the primary system was positive for the remainder of the calculation.

The downcomer temperature and pressure at the end of the calculation were 468.6 K (383.8°F) and 4.04 MPa (585 psia). The response during the last 100 s indicated a temperature decrease of 90.9 K/hr (163.6°F/hr) and a pressure decrease of 3.72 MPa/hr (540 psia/hr). It should be noted that the downcomer temperature is a combination of the three loop temperatures. The cold leg temperatures of loops A and B downstream of the HPI and accumulator injection point were 479.5 and 478.7 K (403.4 and 402.0°F), respectively, while the loop C cold leg temperature was 315.8 K (108.8°F).

The reactor vessel downcomer pressure response for the scenario is shown in Figure 4.41. The primary system pressure is expected to continue decreasing at an average rate of 3.72 MPa/hr (540 psi/hr) for the last 2900 s. The pressure at 11000 s is therefore expected to be approximately 2.41 MPa (350 psia).

The reactor vessel downcomer fluid temperature response for the scenario is shown on Figure 4.42. The temperature response in the last 4100 s was dominated by loops A and B, which were only slightly affected by accumulator injection. The temperature is expected to continue decreasing at a constant rate of 57.8 K/hr (104°F/hr) through 11000 s, at which time it is approximately 422 K (300°F).

The reactor vessel downcomer wall heat transfer coefficient response during the scenario is shown on Figure 4.43. The relatively large spikes in the calculated data were the result of oscillations in the downcomer pressure, temperature, and mass flow rate. These oscillations were due in part to the response of the primary system to the accumulator injection events. During periods of accumulator injection, colder fluid was circulated into the reactor vessel downcomer from the cold legs. This colder fluid resulted in the higher heat transfer coefficients. These rapid changes in the heat transfer coefficient are qualitatively reasonable, but may be overstated. The heat transfer coefficient is expected to remain nearly constant through 11000 s. The final value is estimated to be between 0.7 kW/m^2 K (123 $Btu/hr{\cdot}ft^2{\cdot}°F$) and 1.3 kW/m^2 K (229 $Btu/hr{\cdot}ft^2{\cdot}°F$).

4.3.7. Summary of RELAP5 Calculated Scenarios

While the INEL calculations were performed with "best estimate" modeling assumptions for plant conditions and responses to the events specified in the scenario descriptions, the reader is cautioned that for bounding purposes the scenario descriptions were frequently based on extremely conservative assumptions concerning equipment malfunctions, operator actions and omissions, or combinations of these. Thus, the calculated "best estimate" plant responses cannot be taken to represent the "most probable" plant responses in the various scenarios.

The RELAP5 calculation was not carried out for a full 2-hr (7200-s) period for several of the scenarios. Those cases were extrapolated out to 7200 s based on trends observed at the end of the calculation. For Scenarios 2, 3, 4, 6, 8, and 9, the minimum downcomer temperatures occur in the extrapolated portions of the scenario history.

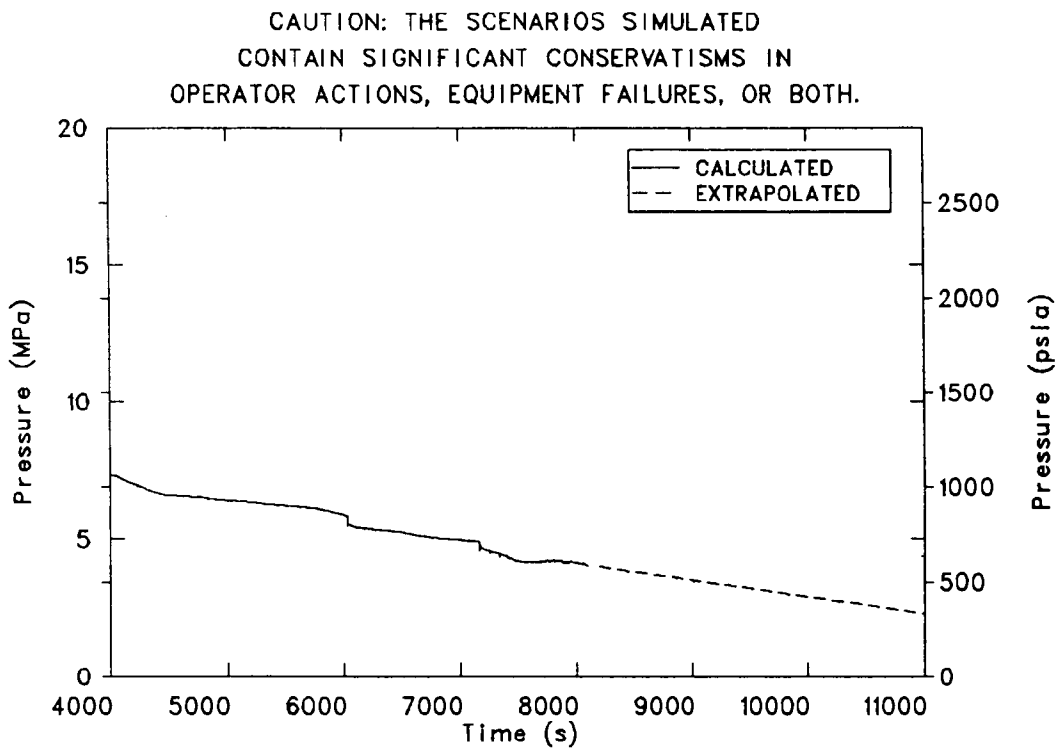

Figure 4.41. Scenario 13: Downcomer pressure profile for loss of heat sink with primary feed and bleed recovery.

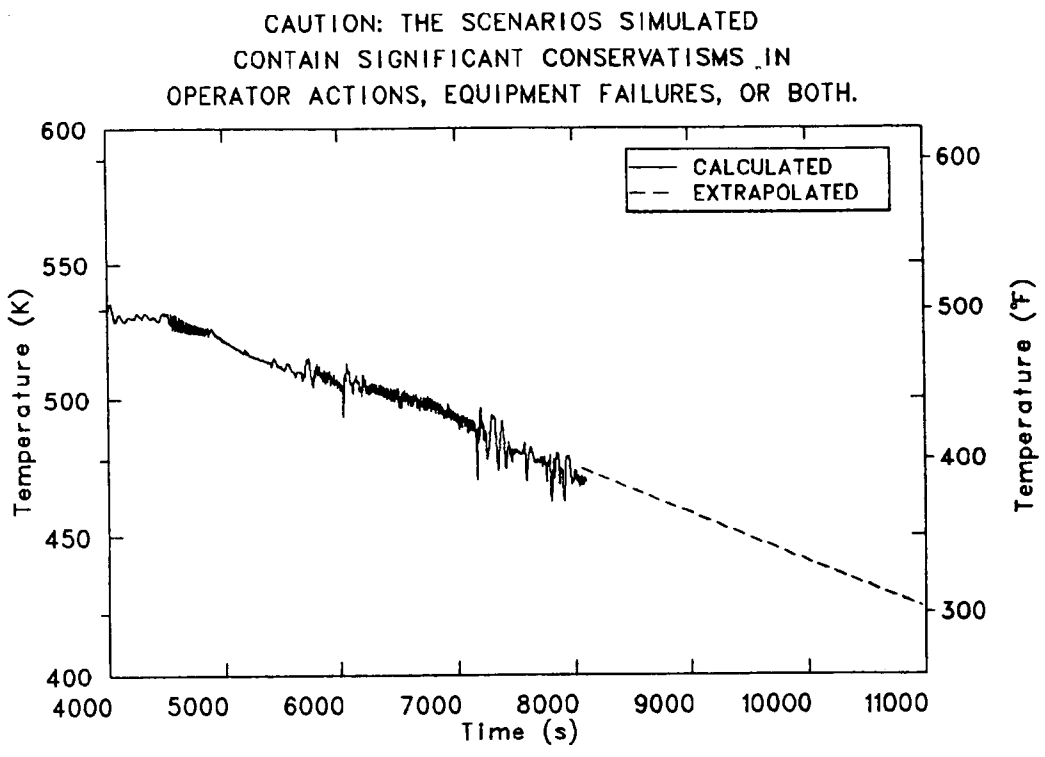

Figure 4.42. Scenario 13: Downcomer temperature profile for loss of heat sink with primary feed and bleed recovery.

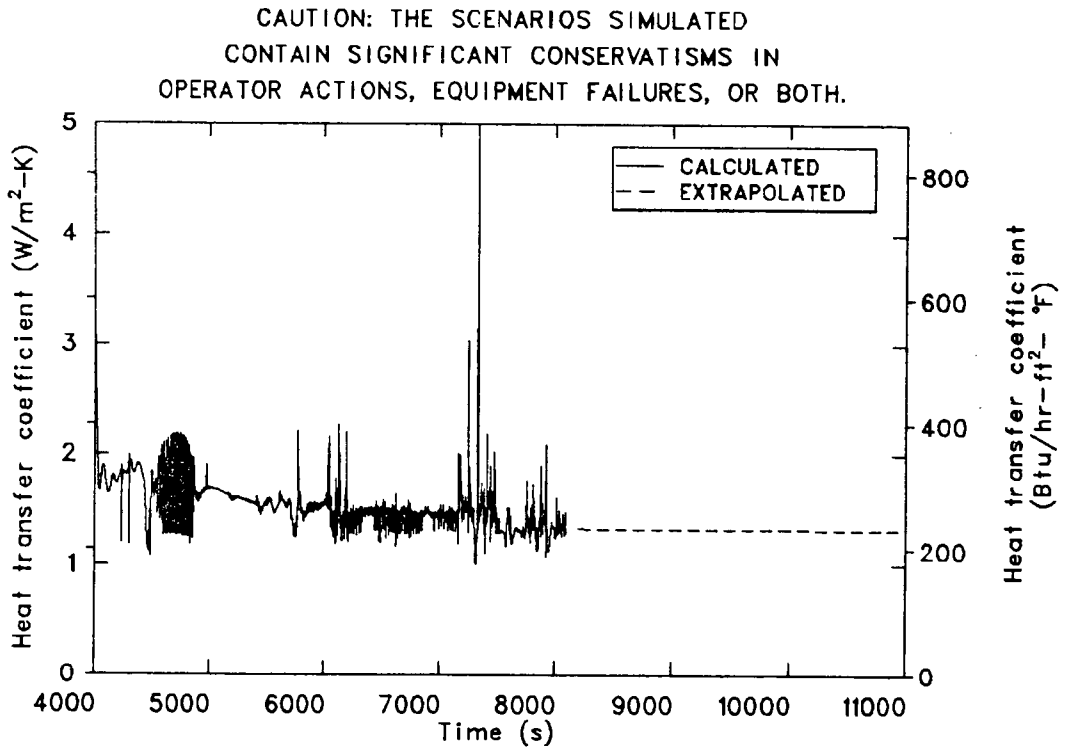

Figure 4.43. Scenario 13: Downcomer inner wall surface heat transfer coefficient for loss of heat sink with primary feed and bleed recovery.

Table 4.32 shows a summary tabulation of minimum fluid temperatures and maximum subsequent fluid pressures in the reactor vessel downcomer for each of the 13 scenarios. These pressures and temperatures occur at an elevation adjacent to the top of the core but not usually coincidently. The temperatures represent the lowest values calculated or, for those calculations terminated before the end of the PTS 2-hr period of interest, the lowest extrapolated temperatures within the 2-hr period. Both the pressures and temperatures have been adjusted, if required, for any uncertainty or bias identified in the calculations, as discussed for each scenario. Table 4.32 is presented as a convenience to the reader and is not intended to be used alone as an indicator of PTS severity for each sequence. The pressure, temperature, and heat transfer coefficient profiles given here are used in fracture-mechanics calculations (see Chapter 5) and provide the basis for labelling which transients are mild and which are severe.

4.4. Evaluation of Flow Stratification Effects

A phenomenon of great concern in PTS is that of flow stratification, specifically, the formation of cold HPI plumes in the downcomer region. Such plumes may present temperatures much lower than the bulk average fluid temperature and thereby influence the probability of fracture.

Table 4.32. Summary of evaluations by INEL for HBR-2 PTS study[a]

Scenario	Description	Plant Condition	Minimum RV Downcomer Fluid Temperature (K)	Minimum RV Downcomer Fluid Temperature (°F)	Maximum Subsequent RV Downcomer Pressure (MPa)	Maximum Subsequent RV Downcomer Pressure (psia)
1	1.0-ft^2 steam-line break	Hot 0% power	396	253	16.2	2350
2	Double-ended steam-line break	Hot 0% power	357	186	11.0	1596
3	Stuck-open STM PORV	Hot 0% power	397	256	10.1	1470
4	Three SDVs fail open	Full power	373	212	11.8	1711
5	SG overfills with AFW	Full power	535	503	16.0	2320
6	Small hot leg break (2½ in.)	Full power	310	100	0.98	142
7	PZR PORV-size primary break	Full power	538	509	17.5	2538
8	Small hot leg break (2½ in.)	Hot 0% power	310	100	0.97	140
9	Small hot leg break (2 in.)	Full power	310	100	2.00	290
10	PZR PORV-size primary break	Hot 0% power	412	288	3.45	500
11	SG tube rupture	Hot 0% power	465	378	9.62	1396
12	SG tube rupture	Full power	557	543	9.65	1400
13	Loss of heat sink with primary feed-and-bleed recovery	Full power	422	300	1.03	150

[a]The acronyms used in this table (in the order of their appearance) are: STM PORV = steam power-operated relief valve, SDV = steam dump valve, SG = steam generator, AFW = auxiliary feedwater, and PZR PORV = pressurizer power-operated relief valve.

Transient simulator codes such as RELAP5 cannot predict plume formation due to the one-dimensional nature of the calculation and noding limitations. Also, as discussed in Section 4.3, the simulator codes tend to be unstable (to experience flow oscillations) at the low loop flow conditions conducive to flow stratification. To properly evaluate the potential for and the effects of stratified flow, T. G. Theophanous of Purdue University reviewed the RELAP5 calculated transients. This review included evaluations with the Purdue Regional Mixing Model (RMM)[3] and the computer code REMIX.[4] It also included experiments performed at the 1/2-scale PTS facility.

The results of the REMIX evaluations and the predictions of stratified flow conditions in some transients based on those results are reported in Section 4.4.1 below. Corrections to the calculated downcomer heat transfer coefficient were also developed and are reported in Section 4.4.2. (The experimental and analytical bases employed in the derivation of the results are described in more detail in Appendix E.)

4.4.1. Flow Stratification Evaluations

Only six of the 13 transients calculated for HBR-2 exhibit stratification. These six transients fall into two classes of behavior: partial loop stagnation, and total loop stagnation. Scenarios 1, 2, and 13 comprise the first class, with one loop flowing in Scenarios 1 and 2 and two loops flowing in Scenario 13. For these scenarios the stagnation persists for relatively long times. The pressure builds towards the relief valve set points in Scenarios 1 and 2 but remains at the intermediate level for Scenario 13. In all three cases the downcomer fluid is well mixed.

Scenarios 6, 8, and 11 comprise the second class, which is characterized by complete stagnation that persists for long periods of time. However, here the pressure remains at intermediate levels — 50 to 100 MPa.

4.4.1.1. Scenario 1: ~0.1-m^2 (1.0-ft^2) steam-line break at hot 0% power

In Scenario 1, cooldown of stagnated loops B and C began from 535 K. The flowing loop A and downcomer region cooled down quickly to 400 K. Thus, until the cold stream in the cold leg became colder than 400 K, all HPI was confined within the cold leg/pump/loop seal assembly. After this condition was reached, and after a little more time required for the pump and loop seal to cool by another 50 K had passed (neglected here), all the HPI (plus entrainment) was directed towards the downcomer. The downcomer remained at 400 K (eventually warming to 420 K) since it was continuously replenished with a relatively strong flow from loop A, as well as with a small (7 kg/s) warm leakage flow.

The RMM analysis of Scenario 1 produced a cold stream temperature exiting the cold leg as shown in Figure 4.44. Notice that this stream is considerably warmer than the temperatures calculated by RELAP. Further mixing will occur as these cold streams enter the downcomer. The resulting weak "planar" plumes in the downcomer will accelerate to a

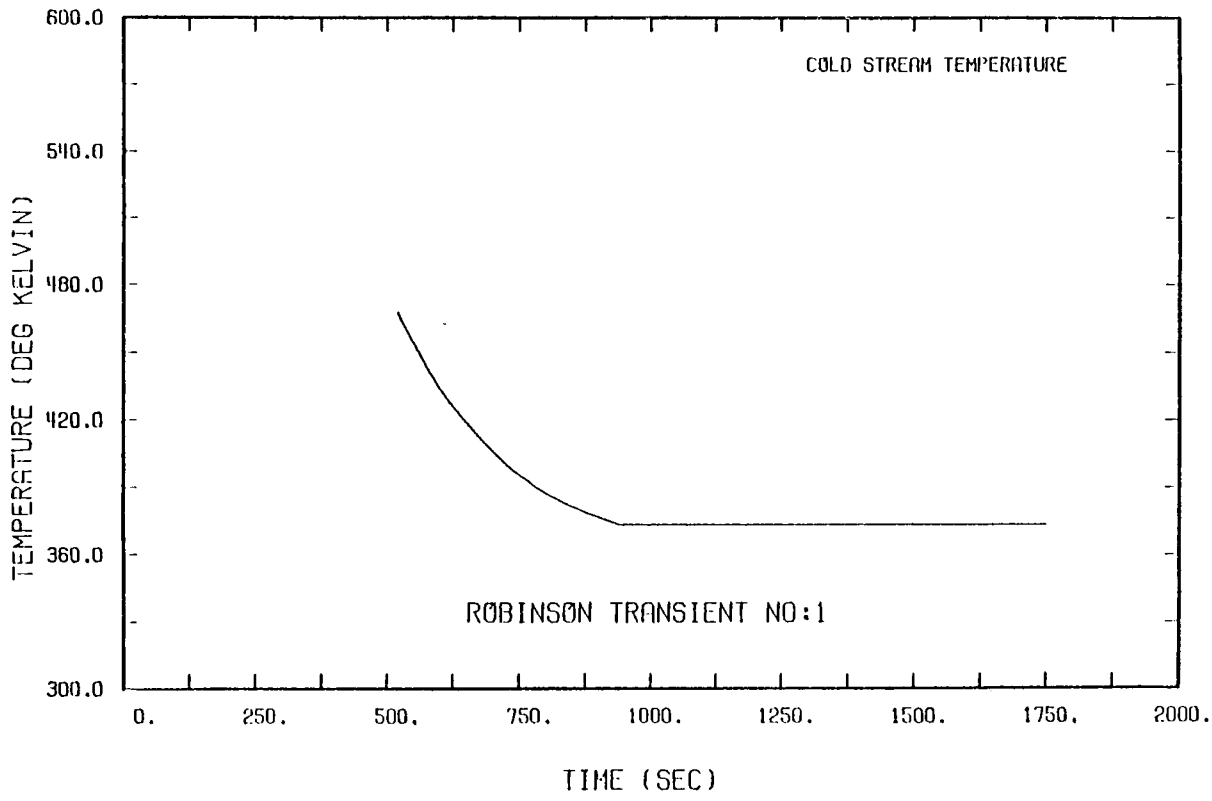

Figure 4.44. Downcomer plume temperature for Scenario 1.

maximum velocity of 1 m/s if they are not destroyed by the loop 1 forced flow. For $t <$ 1000 s, however, this forced flow is rather small and it would appear unlikely that such direct destruction will take place. It is expected that these plumes will decay by normal entrainment processes.

On the basis of these results, it is recommended that the bulk downcomer temperatures as predicted by RELAP should be used for all areas except for the two downcomer strips under cold leg exits of loops 2 and 3. In the case of the plume regions, a different set of temperatures should be used for the first 1000 s. Based on the 1/2-scale experimental data, the uppermost portion of the plumes ($0 < 1/d < 1.5$) will be 20 K warmer than the cold stream temperature shown in Figure 4.44. If the further decay predicted with the RMM is considered, at least another 10 K can be recovered within the next interval ($1.5 < 1/d < 4$). At this point, convection should annihilate any smaller remnants of the original plume and the bulk temperature should be applicable.

4.4.1.2. Scenario 2: Double-ended steam-line break at hot 0% power

Scenario 2 differed from Scenario 1 in that the loop A flow rate was considerably stronger, it cooled to a somewhat lower temperature (385 K), and the HPI was 30% lower. The approach in the analysis was the same as that used for Scenario 1.

The results of the RMM analysis for Scenario 2 are shown in Figure 4.45. Since the likelihood of an immediate breakup of the downcomer plumes is high owing to the strong loop A flow, it is recommended that the bulk downcomer temperatures predicted by RELAP be utilized for this transient.

4.4.1.3. Scenario 13: Loss of heat sink with primary feed-and-bleed recovery

In Scenario 13, only loop C stagnated while loops A and B provided strong flow (100 kg/s each). The HPI flow rate was about the same as that used in Scenario 1. The points made for Scenario 2 concerning strong loop flow are even more applicable here, and thus the use of bulk downcomer temperatures as predicted by RELAP is also recommended for this case.

4.4.1.4. Scenario 6: 2-1/2-in. hot leg break at full power

In Scenario 6, complete stagnation occurred at 1000 s, and for the analysis the RMM was used in the transient cooldown mode. The control volume in this calculation consisted of the loop seal/pump/cold leg/one-third of the downcomer and one-third of the vessel plenum.

The results of the RMM evaluation for Scenario 6 are shown in Figure 4.46. It should be noted that the heat sources used in the analysis included the vessel wall heat source but not the heat from the lower plenum internal structures or from the pump structure. Based on the 1/2-scale experimental results, the initial ($0 < 1/d < 1.5$) portion of the downcomer plume* was warmer than the cold stream shown in Figure 4.46 by 50% of the ΔT between the cold leg temperature and the "ambient" temperature. In the next section of the plume ($1.5 < 1/d < 4$), the temperature of the plume increased to about 75% of the ΔT. Beyond this point, the plume temperature asymptotically approached the ambient temperature. Outside the vertical plumes (approximate width equals one cold leg diameter) underneath the three cold leg exits, the ambient temperature is applicable.

4.4.1.5. Scenario 8: 2-1/2-in. hot leg break at hot 0% power

Scenario 8 was very similar to Scenario 6 except for the accumulator flow, which occurred at 1100 s. The accumulator flow is roughly equal to the HPI flow rate. The results obtained from the analysis are shown in Figure 4.47. The same discussion as presented for Scenario 6 also applies for this transient.

4.4.1.6. Scenario 11: SG tube rupture at hot 0% power

Scenario 11 was also very similar to Scenario 6 except that the HPI flow rate was about one-third of that occurring in Scenario 6. As a result, the RMM analysis predicted larger

*A plume velocity of 1 m/s was used for the analysis.

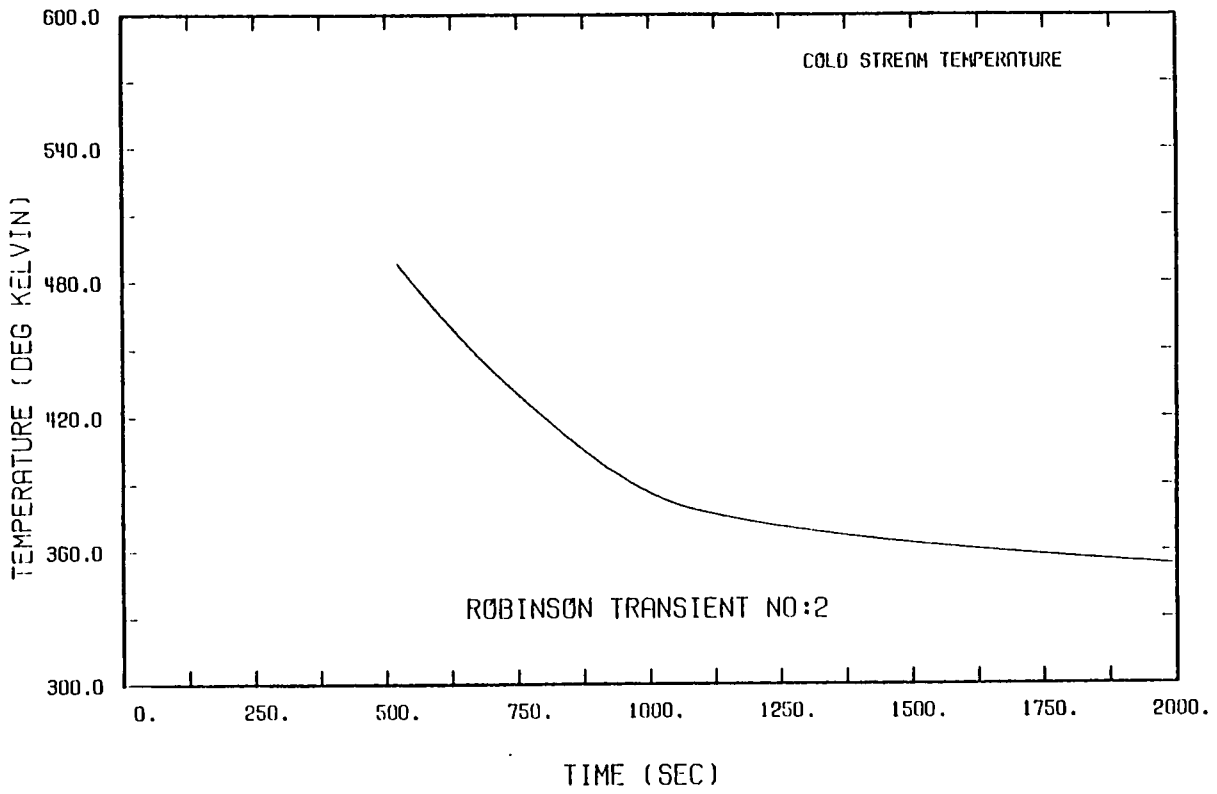

Figure 4.45. Downcomer plume temperature for Scenario 2.

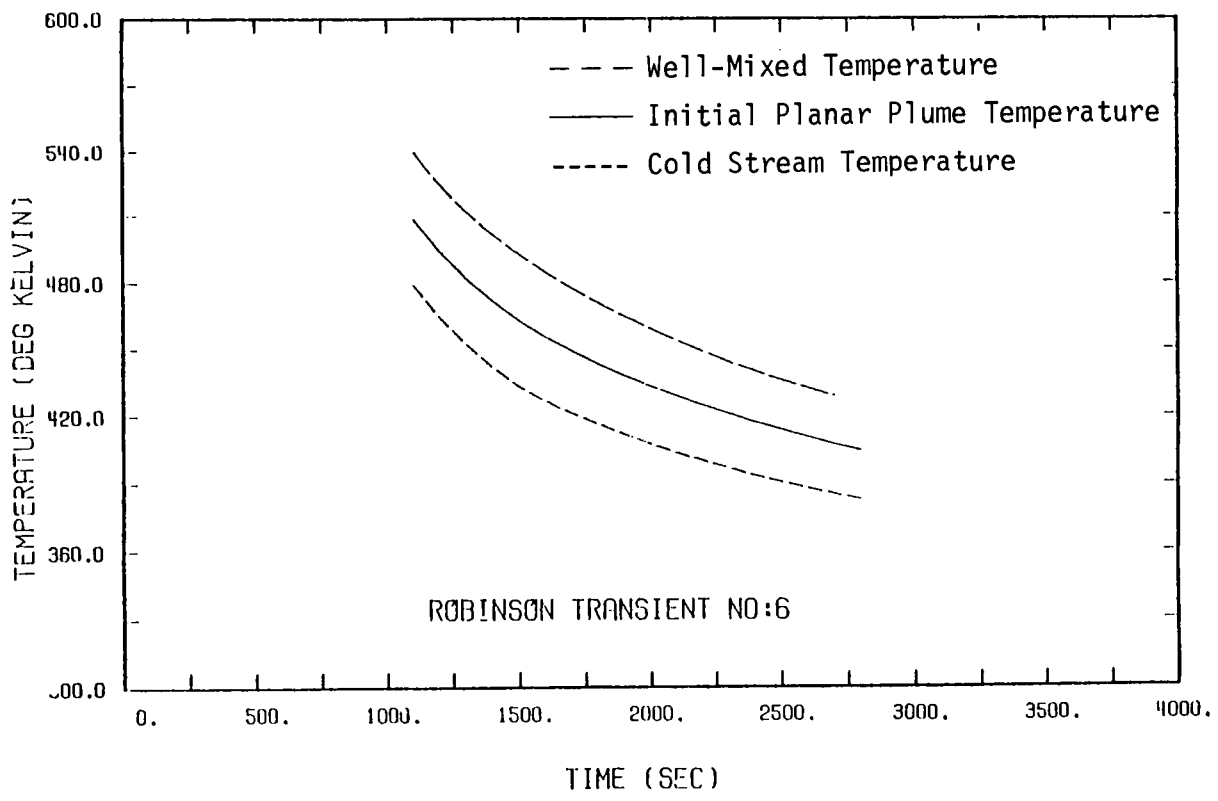

Figure 4.46. Downcomer plume temperature for Scenario 6.

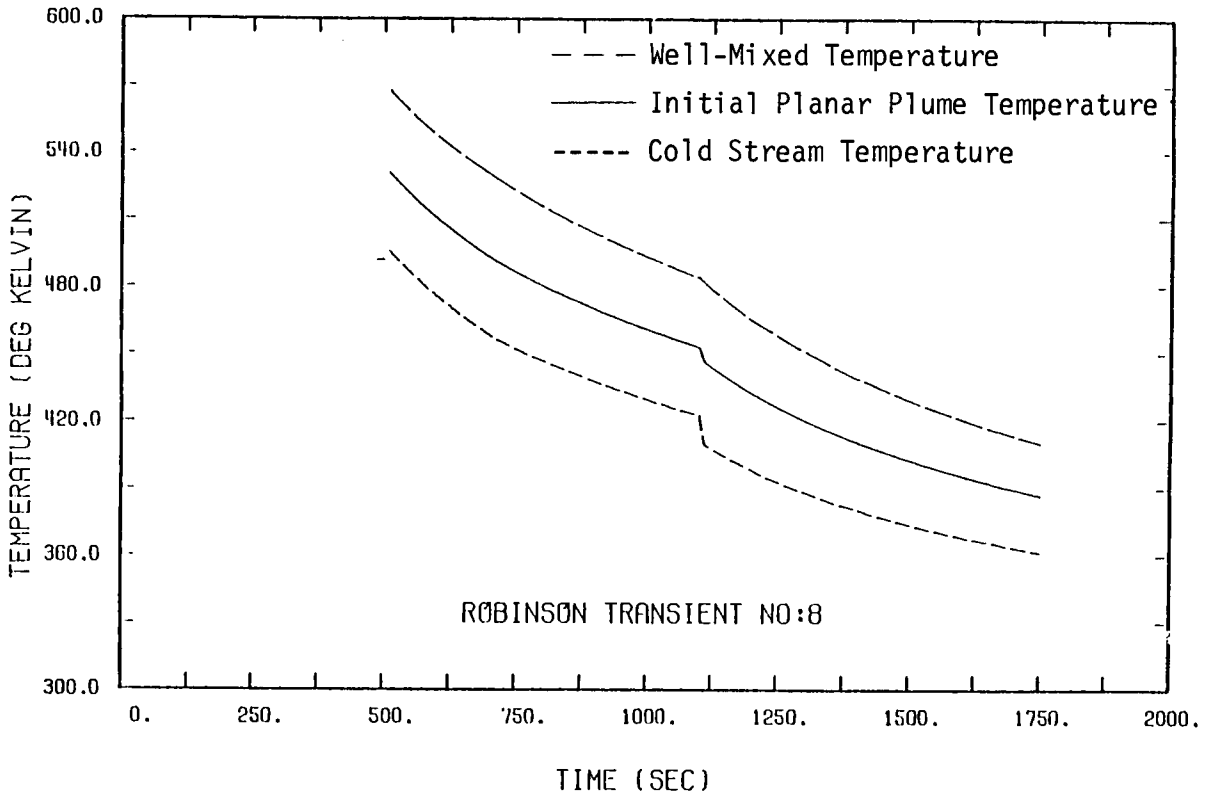

Figure 4.47. Downcomer plume temperature for Scenario 8.

warm water entrainment around the injection point and thus a smaller difference between the cold stream temperature and the ambient temperature as shown in Figure 4.48. This also results in a somewhat lower cooldown rate. All other discussion given under Scenario 6 applies here also.

4.4.1.7. Total stagnation case

In order to evaluate the bounding effects for flow stratification conditions, a total stagnation case was defined. This case was conservative since some loop flow (even if oscillatory) may be theoretically predicted for any scenario. By definition, all loop natural circulation flow was interrupted and cooldown proceeded by HPI injection alone (13.6 kg/s HPI injection rate). The injected HPI flow stratified in the cold leg and downcomer but eventually mixed with and displaced the warm water in these regions. The temperature response for this fully stagnated case is shown in Figure 4.49. By 7200 s, planar plume temperatures on the order of 340 K (152.6°F) are predicted. A more detailed discussion of stagnation and a parametric study of stagnation conditions are presented in Appendix E.

4.4.2. Heat Transfer Coefficient Evaluation

As pointed out in Section 4.3, in the RELAP calculations of the heat transfer coefficients for the inner wall surface of the reactor vessel downcomer, the correlation used for the

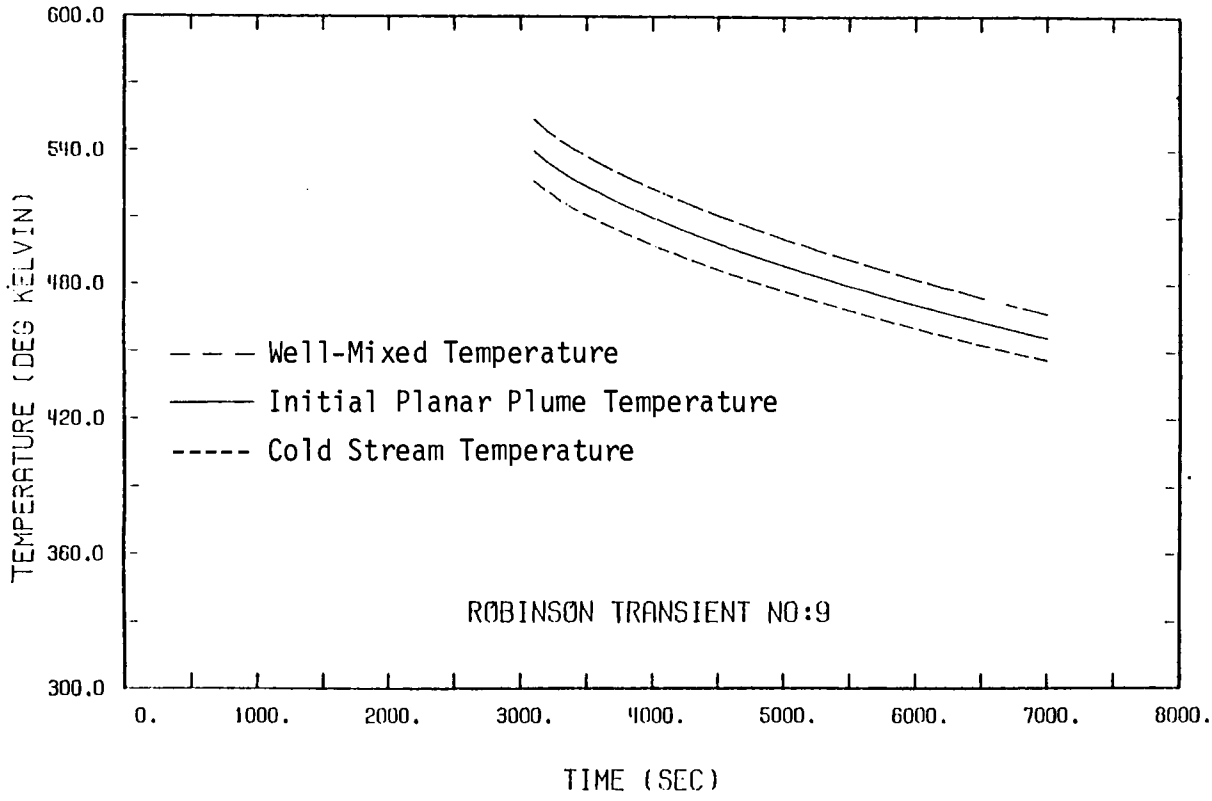

Figure 4.48. Downcomer plume temperature for Scenario 11.

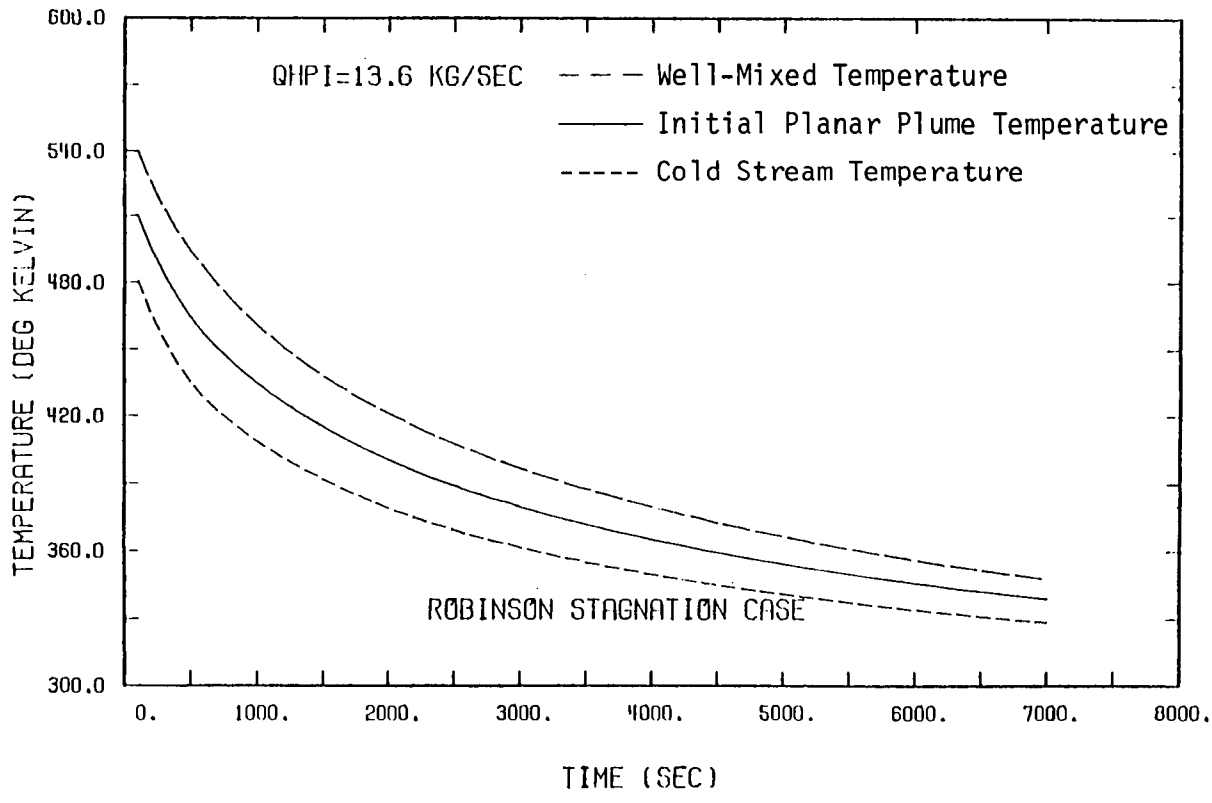

Figure 4.49. Downcomer plume temperature for total stagnation case.

subcooled single-phase heat transfer occurring on the wall surface was the Dittus-Boelter correlation, which is dependent on both flow and fluid conditions. An evaluation of the heat transfer coefficients performed at Purdue University showed that free convection effects were more important in HBR-2 transients than they were in transients studied for Oconee Unit 1 and Calvert Cliffs Unit 1. This means that the RELAP-calculated heat transfer coefficients were underpredicted and thus were somewhat too low to be used in the subsequent fracture-mechanics analyses.

Since most of the RELAP calculations yielded heat transfer coefficients in the range of 300 Btu/hr·ft^2·°F, it was decided that a minimum value of 400 Btu/hr·ft^2·°F would be a conservative value to use in the analyses. This value was chosen for two reasons: (1) it appeared to account for the underpredictions identified in the RELAP calculations, and (2) it is sufficiently large that the total heat transport is not significantly sensitive to the value of the fluid film heat transfer coefficient. Thus the heat transfer coefficients calculated by RELAP were used unless the values fell below the 400 Btu/hr·ft^2·°F, at which point the minimum value was used.

4.5. Estimations of Pressure, Temperature, and Heat Transfer Coefficient Profiles for Potential Overcooling Sequences

The evaluation of PTS risks entails the coupling of event trees for the overcooling incidents to fracture-mechanics calculations of the probability of vessel crack propagation. The link between an event-tree end state and the fracture-mechanics calculation is the transient behavior of the pressure (P), temperature (T), and heat transfer coefficient (h) in the reactor vessel downcomer region over the analysis period of the sequence. That is, the P, T, and h transient profiles for the sequences defined by the event-tree end states become inputs for the fracture-mechanics calculation.

As pointed out in Section 4.1, a large number of potential overcooling transients were identified for which thermal-hydraulic profiles are required. However, the cost and complexity of detailed thermal-hydraulics calculations precludes evaluations of every end state separately. As a result, detailed calculations were limited to the 13 selected overcooling transients described in preceding sections of this chapter. For the remaining sequences, it was necessary to (a) reduce by similarity grouping the number of end states to be evaluated and (b) obtain the needed data with less rigorous estimation techniques.

This section summarizes the approach used to group sequences and to estimate the P, T, and h profiles for all the HBR-2 overcooling sequences. Section 4.5.2 describes the grouping strategy used to sort sequences by controlling conditions and phenomena, Section 4.5.3 discusses the estimation methods employed, and Section 4.5.4 provides an abbreviated summary of the estimation results. More detailed discussions of the methods and results of the P, T, and h estimations, which were performed by INEL, are provided in Appendix F.

4.5.1. Grouping of Sequences

The event-tree development discussed in Chapter 3 identified 229 overcooling sequences whose pressures, temperatures, and heat transfer coefficients should be evaluated in detail. The sequences fell within 12 initiator categories as follows:

(1) Small-break LOCA at full power - 23 sequences. (See Table 3.13 and Section 4.2.1.)

(2) Medium-break LOCA at full power - 13 sequences. (See Table 3.13 and Section 4.2.2.)

(3) Small-break LOCA at hot 0% power - 7 sequences. (See Table 3.15 and Section 4.2.3.)

(4) Medium-break LOCA at hot 0% power - 3 sequences. (See Table 3.15 and Section 4.2.4.)

(5) Small steam-line break at full power - 25 sequences. (See Table 3.11 and Section 4.2.5.)

(6) Large steam-line break at full power - 15 sequences. (See Table 3.11 and Section 4.2.6.)

(7) Small steam-line break at hot 0% power - 16 sequences. (See Table 3.9 and Section 4.2.7.)

(8) Large steam-line break at hot 0% power - 10 sequences. (See Table 3.9 and Section 4.2.8.)

(9) Reactor trip at full power - 104 sequences. (See Table 3.7 and Section 4.2.9.)

(10) Steam generator tube rupture at hot 0% power - 5 sequences. (See Table 3.16 and Section 4.2.10.)

(11) Loss of main feedwater - 6 sequences. (See Table 3.17 and Section 4.2.11.)

(12) Support system failure - 2 sequences. (See Table 3.19 and Section 4.2.12.)

As was described in Chapter 3, the terminology used here implies the following: (1) a small-break LOCA is initiated by a single PZR PORV-size break, (2) a medium-break LOCA is initiated by a 0.0635-m-diameter (2-1/2-in.) hot leg break, (3) a small steam-line break is a single stuck-open STM PORV, and (4) a large steam-line break is a double-ended rupture of one steam line downstream of the flow restrictor and upstream of the main steam isolation valve. The term "at full power" means during 2300-MW operation and "at hot 0% power" means at hot steady state 100 hr after reactor shutdown. The term "isolatable LOCA," used later, refers to a loss-of-coolant accident in which the break is isolated after some delay and the loss of primary system inventory is then terminated. In the case of a stuck-open PZR PORV, for example, the operator can close the PORV block valve, thus terminating the primary-side break.

For the estimations of the P, T, and h profiles, the overcooling sequences were regrouped on the basis of the controlling thermal-hydraulic phenomena. For an example, those sequences involving a secondary side break affecting only one SG (primary side intact) were put in Group A. All sequences in initiator categories 6 and 8 and some of the sequences in categories 5, 7, and 9 also fell into Group A. Altogether, the sequences were reduced to 10 groups (A-J).

Table 4.33 presents the regrouping of sequences by controlling thermal-hydraulic phenomena. Groups A through C include sequences with only secondary-side breaks, Groups D and E include sequences with no primary- or secondary-side breaks, Groups F and I are sequences with only primary-side breaks, Groups G and H include sequences with combinations of primary- and secondary-side breaks, and Group J includes SG tube rupture sequences.

The purpose of the regrouping is to organize sequences in such a way that all sequences within a group share common controlling phenomena. By developing and qualifying a specific method to determine the pressure and temperature histories for any single sequence within a group, an analyst has thus developed a method generally applicable to all sequences within that group. Furthermore, this approach assures that sequences with the same controlling phenomena are analyzed in a consistent manner.

During the grouping exercise it was observed that certain sequences were exactly equivalent to other sequences and thus not all the sequences identified in the Chapter 3 tables are included in Table 4.33. These equivalent sequences are reported in Table 4.34. The equivalencies of these sequences are based on factors such as same break size and location, inconsequential failures (e.g., feedwater regulating valve failure is backed up by an isolation valve), specified equivalent combinations of equipment failures or actions, and transient conditions where specified equipment is not challenged. These factors are also identified in Table 4.34.

4.5.2. Estimation Methods

As stated earlier, all the sequences begin from the steady state plant conditions associated with either full power or hot 0% operation. When the initiating event occurs, the plant experiences a transient defined by: (1) the initiating event, (2) operator or hardware failures specified in the sequence description, and (3) automatic and operator actions encountered as a result of changes in condition due to (1) and (2). The transients generally include an early phase during which a complicated series of operator and automatic actions occur and a late phase during which such actions have ceased and the thermal-hydraulic plant conditions can be determined by relatively stable thermal-hydraulic processes. For example, during an event with one or more SDVs failing open, the initiating event would be expected to cause a rapid succession of events such as reactor and turbine trips, SI and AFW initiation, MFW train isolation, letdown isolation, termination of pressurizer heater power, an increase in makeup flow, and RCP trips. After these events, however, the plant conditions are controlled by the relatively stable processes of core heat addition, natural circulation loop flow, and heat removal to the generators. Depending on the severity of the initiating event and subsequent failures, this later stable phase typically begins at from 5 to 20 min after the initiating event. (It should be noted that the term "stable phase" does not mean "steady phase." In this example, factors contributing to non-steady behavior during the stable phase include continually decreasing core decay heat, secondary system pressure, and stored energy in metal components.)

Of course, the best approach for determining the thermal-hydraulics characteristics of a sequence is to perform a detailed thermal-hydraulic calculation such as was done with the RELAP5 computer code for the 13 selected transients (see Section 4.3). Since that was

Table 4.33. Regrouping of sequences by controlling condition or phenomenon[a]

Group	Controlling Condition or Phenomenon	Sequences
A	Secondary-side break, one affected SG	5.1, 6.1 — 6.9, 7.1 — 7.8, 8.1 — 8.6, 9.25 — 9.32
B	Secondary-side break, three symmetrically affected SGs	7.12, 9.2 — 9.23, 9.41 — 9.47
C	Secondary-side breaks with two affected SGs or three symmetrically affected SGs	5.14, 5.15, 5.17 — 5.20, 7.9 — 7.11, 9.33 — 9.40
D	Reactor trip from full power, no primary- or secondary-side breaks	9.1, 9.49 — 9.55 13.1 — 13.6 14.1 — 14.2
E	MFW overfill	9.56
F	Primary-side breaks	1.1 — 1.4, 2.1 — 2.4, 3.1, 3.2, and 4.1
G	Primary-side breaks combined with symmetric secondary-side breaks	1.5 — 1.8, 2.5 — 2.8, 3.3
H	Primary-side breaks combined with asymmetric secondary-side breaks	1.9 — 1.12, 2.9 — 2.11
I	Isolatable primary-side breaks	11.1 — 11.4, 12.1 — 12.4
J	SG tube ruptures	10.1 — 10.5

[a]The acronyms used in this table (in the order of their appearance) are: SG = steam generator and MFW = main feedwater.

not economically feasible, the method generally used to cover all the sequences was to apply the detailed RELAP5 model for the early stage of the transient and to use a simplified RELAP5 model for the remainder of the transient. Thus, the RELAP5 calculation (1) defined the plant response during the complicated early phase of a transient, (2) allowed confirmation that a stable region had been reached, (3) defined the starting condition for a simplified model calculation over the stable region, (4) provided an understanding of the stable controlling phenomena that was required to assemble a valid simplified model, and (5) provided results against which the results from the simplified model

Table 4.34. Thermal hydraulically equivalent sequences

Sequence(s)	Is (Are) equivalent to Sequence	Reason(s)[a]
1.13, 1.17, 1.18	1.1	b
1.14	1.2	b
1.15	1.3	b
1.16	1.5	b
5.2 — 5.13	5.1	d
5.16	5.14	f
5.21 — 5.24	5.1	d
9.24	9.19	e
9.48, 9.66, and 9.81	9.1	b
9.57, 9.75, and 9.86	9.2	a,b
9.58 and 9.76	9.3	a,b
9.59 and 9.77	9.4	a,b
9.60	9.5	a,b
9.61 and 9.78	9.6	a,b
9.62, 9.79, and 9.87	9.9	a,b
9.63	9.10	a,b
9.64	9.11	a,b
9.65 and 9.80	9.13	a,b
9.67 and 9.82	9.49	b
9.68 and 9.83	9.50	b
9.69 and 9.84	9.51	b
9.70 and 9.85	9.52	b
9.71	9.53	b
9.72	9.54	b
9.73	9.55	b
9.74	9.56	c

[a]Reasons:

a. Same break size and location.

b. FW regulating valve failure following a reactor trip is inconsequential unless it is accompanied by a feedwater isolation valve failure on the same feedline.

c. Since only one FW isolation valve fails open, the failure of only one FW regulating valve is inconsequential.

d. Sequences initiated by a stuck-open STM PORV at full power do not result in reactor or turbine trips.

e. MSIV closure signal is not generated because coincident high steam-line flow (in two out of three lines) and low average temperature were not encountered. "MSIV Fails to Close on Demand" is therefore inconsequential.

f. "Failure to Throttle" AFW is inconsequential because SG narrow range levels had not recovered to 40% before AFW was isolated at 10 min.

could then be compared and qualified. Once qualified, the simplified model was then used to determine the thermal-hydraulic response over the remainder of the sequence.

For the analyses presented in this report, the simplified models typically ran faster than the detailed models by a factor of about 200. Comparisons of the results from the detailed and simplified calculations show that the agreement is adequate to justify using the simplified model. As discussed elsewhere,[1] agreement ranged from fair for calculations of primary side breaks to excellent for secondary side breaks. The stable portion of the sequences was controlled by quasi-steady simple mass and energy balances which could be well represented with the simplified model.

The following subsections document the basic detailed and simplified models used in these analyses.

4.5.2.1. Detailed RELAP5 model

The detailed model used in sequence estimation was the same as the RELAP5 model described in Section 4.3. As mentioned earlier, it was not economically feasible to completely evaluate all sequences using the detailed model. Instead, the detailed model was employed to evaluate the initial transient portions of selected sequences out to a point in time when either the simplified RELAP5 model (Section 4.5.2) or hand calculations (Section 4.5.3) could adequately model the remainder (stable phase) of the transient. The use of the detailed RELAP5 model and the simplified models allowed accurate evaluation of the crucial or trend-setting transient portion of a sequence and economic evaluation of the remaining stable portion by simplified methods.

4.5.2.2. Simplified RELAP5 model

This section describes the basic simplified RELAP5 HBR-2 model, which was developed primarily by combining calculational cells of the detailed RELAP5 model and was used to address thermal-hydraulic plant phenomena during the later stages of sequences. The base model was specifically designed to address sequences in which (1) reactor and turbine trips have occurred, (2) SI and AFW flows have been initiated, and (3) the RCPs have been tripped. Furthermore, the model assumes that significant transient effects of these actions have ceased and symmetric loop natural circulation continues.

The base model was generally applied as developed to the later stages of sequences with stuck-open SDVs (most sequences in Group B) or small primary breaks (part of Group F). Variations of the base model, required to properly address sequences controlled by different phenomena, are discussed in Section 4.5.2.3.

For sequences involving stuck-open SDVs, the later portions of the sequences are controlled by decay heat addition in the core, symmetric loop natural circulation and symmetric heat removal through all SGs. The symmetry exists because the SDVs are located on the portion of the steam line common to all three SGs.

For sequences involving only a small primary break (defined in Chapter 2 as a single stuck-open PZR PORV), the controlling phenomena during the later portions of the sequences are core heat addition, virtually symmetric loop natural circulation, heat removal to SGs, and energy and mass removal at the PORV. Minor loop asymmetries due to the break location are ignored.

A nodalization diagram of the base simplified model developed to address the primary and secondary system mass and energy balances that control the phenomena described in the previous two paragraphs is shown in Figure 4.50. Component 100 represents all fluid in the reactor coolant system (RCS) except for the pressurizer (components 340 and 341) and fluid volume above the hot leg centerline within the reactor vessel head (component 126). Component 266 represents the fluid volume of the three SG secondaries. Auxiliary to the primary system are time-dependent junction component 951, representing HPI and LPI flow as a function of primary system pressure, and component 971, representing charging flow as a function of pressurizer level. The three accumulators are modeled as component 911, and the PZR PORV by valve component 344. Auxiliary to the secondary system are time-dependent junction components 536 and 540, representing motor- and turbine-driven AFW injection, and time-dependent junction component 808, representing a secondary system steam break. The three heat structures shown represent the pressurizer heaters, the U-tubes of the three SGs, and the core and passive heat structures. This latter heat structure represents the metal of the core, reactor vessel, loop piping, and SG shells. Heat input was based on the ANS standard for decay heat and the time since the reactor trip.

AFW logic requires the calculation of SG narrow-range levels. Because of the simplicity of the model, this was not possible. Instead, the results of the detailed model calculations were reviewed during periods of similar plant behavior to determine the secondary masses corresponding to key narrow-range level set points. The AFW control was then based on the mass set points rather than on the level set points.

The steam break (component 808) was represented with a time-dependent junction that calculated break steam flow based on the secondary steam pressure, the break area, and homogeneous equilibrium model critical flow tables. The SG secondaries were assumed to be at saturation conditions with in-flow of subcooled AFW and outflow of saturated steam.

Again because of the simplicity of the model, it was necessary to specify heat transfer coefficients on both sides of the U-tube heat structure. On the inside surface, the fluid in component 100 of the simplified model was not flowing while the fluid inside the U-tubes was flowing owing to natural loop circulation. On the outside surface, the void fraction in component 266 did not adequately represent that in the lower boiler section. These problems were circumvented by specifying constant heat transfer coefficients at both locations based on representative coefficients calculated with the detailed model for similar conditions. In the same manner, a constant heat transfer coefficient was specified for the heat structure representing the core and other metal.

As was discussed earlier, the initial conditions for the simplified model were derived from conditions calculated using the detailed model. As a result of qualifying the simplified model against the detailed model, it was found that the best agreement was obtained if the

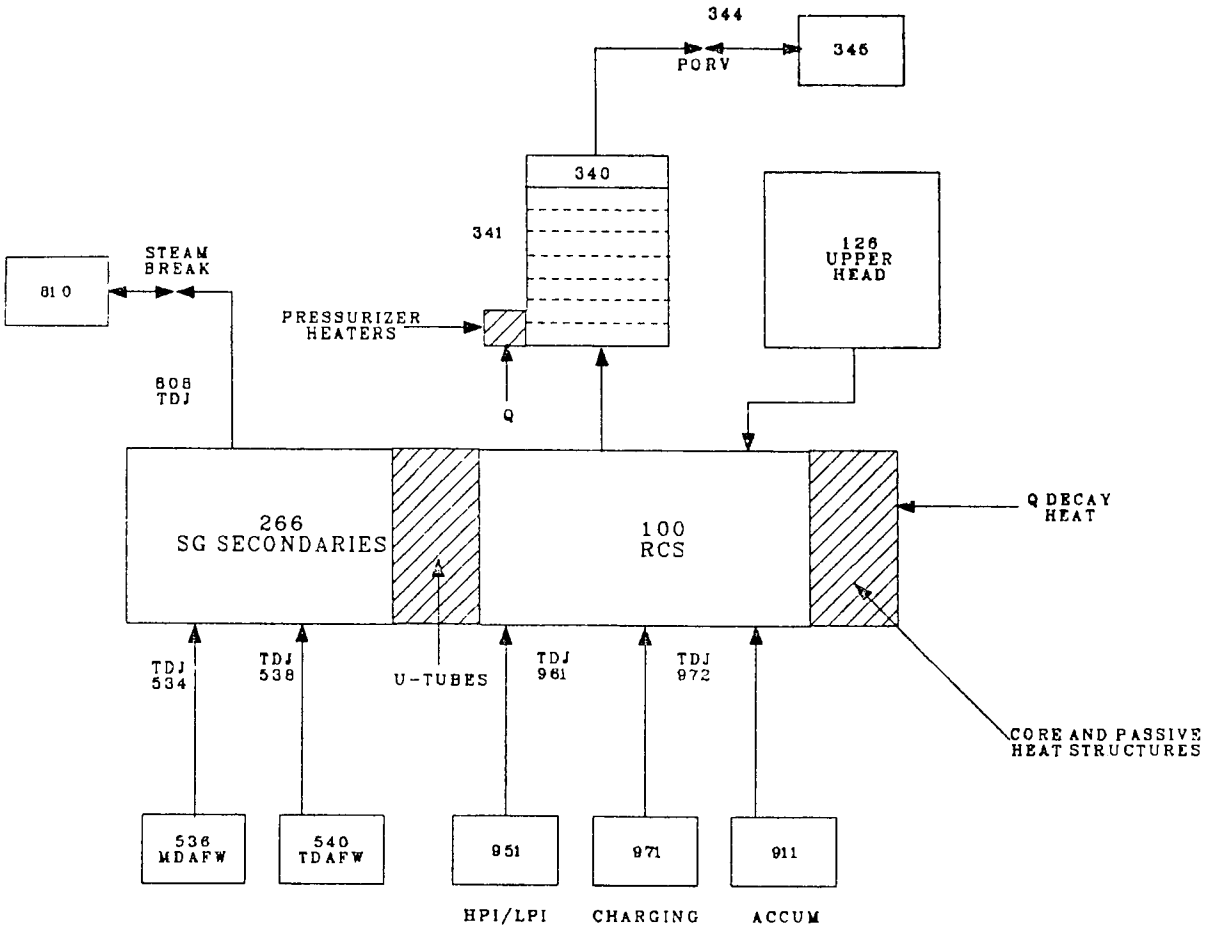

Figure 4.50. Base simplified RELAP5 model nodalization.

RCS cell in the simplified model (component 100) was initialized at a temperature consistent with the third U-tube cell of the detailed model (Cell 3 of component 408 in Figure 4.1). The temperature of this U-tube cell generally differs from the reactor vessel downcomer fluid temperature only slightly [typically 2 K (3.6°F)]. Thus the simplified model RCS temperature generally was used directly as an indication of downcomer temperature.

4.5.2.3. Modified simplified RELAP5 model

For the primary break sequences, such as in Groups F-I (see Table 4.33), the natural loop circulation was slower and the HPI flow higher than was accounted for in the base

model assumptions. For these cases, a mixing equation was employed to obtain the downcomer temperature as a function of loop flow and temperature, ECC flow and temperature, and fluid transient time between the SG and the downcomer. The expression is given by

$$T_{DC} = \frac{m_{Loop}T + m_{ECC}T_{ECC}}{m_{Loop} + m_{ECC}} - \tau \frac{dT}{dt}, \tag{4.1}$$

where

T_{DC}, T, T_{ECC} = downcomer, average RCS, and ECC system temperatures, respectively,

m_{Loop}, m_{ECC} = primary loop and ECC mass flows,

dT = rate of change in RCS average temperature,

τ = flow transit time.

The parameters m_{Loop} and m_{ECC} were estimated from a detailed calculation representative of the case being modeled. The simplified model yields the average RCS temperature (T) and its derivative (dT/dt). These are combined to yield the effective downcomer temperature. Where ECC flows dominate, the downcomer temperature will be very close to T_{ECC}. This equation allowed the simplified base model to be fitted to a condition of high ECC flows relative to reduced or stagnated primary loop flows.

Other variations in parameters within the simplified base model itself allowed simulation of other phenomena predicted by the detailed RELAP5 calculations. For example, a small secondary break affecting only one SG would tend to stagnate loop flow to the two unaffected SGs. The unaffected SGs were thus isolated (removed) from the rest of the RCS such that the water mass and stored energy of the isolated SGs could not influence the cooldown rate. Corresponding adjustments in the simplified model parameters describing the SG and RCS allowed simulations that yielded results very similar to those obtained with the detailed RELAP5 model.

Using detailed RELAP5 calculations as a basis, 13 simplified base model variations were developed to cover sequences involving the following conditions:

(1) Small steam-line break with one affected SG and tripped RCPs.

(2) Small steam-line break with one affected SG and RCPs operating.

(3) Steam-line break with one affected SG but primary system heat removal controlled by unaffected SGs.

(4) Large steam-line break with one affected SG.

(5) Small steam-line break symmetrically affecting three SGs and RCPs operating.

(6) Steam-line breaks with two affected SGs.

(7) Small-break LOCAs.

(8) Medium-break LOCAs.

(9) Small-break LOCAs with one stuck-open STM PORV.

(10) Small-break LOCAs with two stuck-open STM PORVs.

(11) Medium-break LOCAs with one stuck-open STM PORV.

(12) Medium-break LOCAs with two stuck-open STM PORVs.

(13) SG tube rupture.

These model variations, whose development and verification are described elsewhere,[5] include all the thermal-hydraulic phenomena expected in the 214 sequences evaluated. They also address the conditions of Groups A–J in Table 4.33.

With the mixing equation and model variations described above, the simplified base model, *when used properly,** has a level of performance approaching that of the multinode detailed RELAP5 model.

4.5.2.4. Other techniques

Certain sequences presented conditions which were small perturbations of a detailed RELAP5 calculation and/or could not be fully addressed by the simplified base model and its variations. In such instances, hand calculations were performed to modify the available results (from the detailed calculations or simplified model calculations) to match the required sequence conditions. The mixing expression (Equation 4.1) is an example of a hand calculation which, in this case, corrected the predicted downcomer temperature for the effects of localized cooling from ECCS flows. Other calculations included evaluation of asymptotic temperature limits and corrections for changes in HPI and/or AFW flows. Such calculations were usually applied late in the evaluated sequences where more detailed calculations were not necessary.

4.5.3. Estimated Results for Sequence Groups

The 13 original RELAP5 calculations, the detailed RELAP5 model, the simplified base model, and hand calculations were applied to develop the pressure and temperature profiles for the 214 sequences. Heat transfer coefficient profiles were assigned from the 13 original RELAP5 calculations (as modified by Theophanous) based on similarity of transient conditions. A full accounting of the estimation process is too lengthy to include in this chapter. However, a summary of the results for each major type of sequence can be provided.

*The phrase *used properly* refers to the fact that the usage is limited to cases where it technically applies (the simplifying assumptions are consistent with the transient analyzed) and is used in conjunction with judicious verification against more detailed analysis.

4.5.3.1. Sequences with secondary-side breaks

Seventy-nine sequences involving only secondary-side breaks (Groups A, B, and C in Table 4.33) were investigated. These sequences contained one or more stuck-open STM PORVs, one or more stuck-open SDVs, double-ended main steam-line breaks, and combinations of these events. The general findings were as follows: (1) the larger break sizes produced colder reactor vessel downcomer temperatures, (2) a failure to throttle the charging flow resulted in high primary system pressures, and (3) continued AFW flow prevented a severe primary system repressurization.

The most severe sequence investigated within these groups was Sequence 9.22, which involved five stuck-open SDVs, failures of the operator to throttle AFW and charging flow following a reactor trip from full power, and failure of the operator to close the MSIVs. For this sequence, the minimum reactor vessel downcomer fluid temperature was 364 K (196°F) and the maximum subsequent pressure was 16.35 MPa (2371 psia).

For sequences initiated by a stuck-open STM PORV at full power, an automatic reactor trip did not occur, thus precluding PTS concern. However, it was recognized that the operator could manually trip the reactor in such sequences; thus, thermal-hydraulic responses for these sequences were obtained.

For sequences initiated by a reactor trip and followed by a stuck-open STM PORV, the primary system pressure did not decline sufficiently to cause tripping of the RCPs, thus minimizing the PTS concern for such scenarios.

4.5.3.2. Sequences with SG tube ruptures

Five sequences (Group J) involving the rupture of a single SG tube with the reactor at hot 0% power were investigated. With repressurization of the primary system limited by the broken tube, the minimum temperatures are essentially determined by the operator actions and failures specified in the sequence description. For example, if the operator was assumed to open the SDV until a subcooling criterion was met, the magnitude of the cooldown was specified by the assumption.

The SG tube rupture sequences were, in general, not severe except for Sequence 10.2, which involved a 10-min period with a stuck-open SDV. This sequence resulted in a minimum temperature of 409 K (227°F) and a maximum subsequent pressure of 7.45 MPa (1080 psia).

4.5.3.3. Sequences with reactor trip with minor failures

Nine sequences (Groups D and E) were investigated which were initiated by a reactor trip followed by minor system failures and involved no primary- or secondary-side breaks. All sequences were found not to be severe. The minimum temperatures [503 K (446°F)] were calculated for sequences involving SG overfill using AFW.

4.5.3.4. Sequences with combination primary- and secondary-side breaks

Sixteen sequences (Groups G and H) involving combinations of primary- and secondary-side breaks were investigated. In general, these sequences were not as severe as the corresponding sequences involving only the secondary-side break. The sequences with combined breaks had temperature responses similar to a corresponding sequence with secondary-side break only and pressure responses similar to a corresponding sequence with a primary-side break only.

For sequences with a symmetric secondary-side break (stuck-open SDVs), natural circulation continued in all loops. For sequences with an asymmetric secondary-side break (one or two stuck-open STM PORVs), natural circulation continued only in the affected loop or loops.

Sequences involving a medium primary-side break resulted in lower reactor vessel downcomer temperatures and pressures than the corresponding sequences with small primary-side breaks.

For all sequences in this category, resulting temperatures were very low [a temperature of 344 K (160°F) for Sequence 2.8 was the lowest]. However, resulting pressures are also low [2.54 MPa (369 psia) for Sequences 1.9 and 1.11 is the highest], thus limiting PTS concern for combined breaks.

4.5.3.5. Sequences with primary-side breaks

Nineteen sequences (Groups F and I) involving only primary-side breaks were investigated. Sequences with a medium-break LOCA resulted in reactor vessel downcomer temperatures a few degrees above the HPI temperature; however, the resulting primary system pressures were very low, thus limiting PTS concern. Sequences with a small-break LOCA resulted in higher temperatures and higher pressures than corresponding sequences with a medium-break LOCA.

Both the medium- and small-break LOCAs were large enough to remove more energy than that generated by decay heat within 2 hr. Consequently, the reactor coolant system could be cooled and depressurized with either break size. Loop flow stagnation in all loops was calculated to occur only when the U-tubes were voided. The medium-break LOCA was capable of voiding the U-tubes, but the small-break LOCA was not. Loop flow stagnation in all loops did not occur when the loops were liquid full, even with heat transfer from the SGs to the primary system.

Sequences involving isolation of a primary-side break resulted in high primary system pressures. As a result of isolation during the early stage of the sequence, however, severe overcooling of the primary system did not occur before the time of isolation, and the PTS concern was minimized.

4.6. References

1. C. D. Fletcher *et al.*, *Thermal-Hydraulic Analyses of Pressurized Thermal Shock Sequences for the H. B. Robinson Unit 2 Pressurized Water Reactor*, EG&G Idaho, Inc., Idaho Falls, Idaho, NUREG/CR-3977 (April 1985).
2. C. Yuelys-Miksis, U. S. Rohatgi, and J. H. Jo, *Review of RELAP5 Calculations for H. B. Robinson Unit 2 PTS Study*, Brookhaven National Laboratory (in preparation).
3. T. G. Theofanous, P. Gherson, H. P. Nourbakhsh, and K. Iyer, *Decay of Buoyancy Driven Stratified Layers with Applications to PTS*, NUREG/CR-3700, February 1984.
4. H. P. Nourbakhsh and T. G. Theofanous, *REMIX: A Computer Program for Temperature Transients Due to HPI at Stagnated Loop Flow*, NUREG/CR-3701, May 1984.
5. C. D. Fletcher, C. B. Davis, and D. M. Ogden, *Thermal-Hydraulic Analyses of Overcooling Sequences for the H. B. Robinson Unit 2 Pressurized Thermal Shock Study*, EG&G Idaho, Inc., Idaho Falls, Idaho, NUREG/CR-3935 (May 1985).

Chapter 5

PROBABILISTIC FRACTURE-MECHANICS ANALYSIS OF POTENTIAL OVERCOOLING SEQUENCES FOR H. B. ROBINSON UNIT 2

R. D. Cheverton and D. G. Ball

Oak Ridge National Laboratory

5. PROBABILISTIC FRACTURE-MECHANICS ANALYSIS OF POTENTIAL OVERCOOLING SEQUENCES FOR H. B. ROBINSON UNIT 2

5.1. Introduction

This chapter provides detailed information regarding the probabilistic fracture-mechanics analysis of the H. B. Robinson Unit 2 (HBR-2) reactor vessel and another (hypothetical) vessel (identified as HBR-HYPO) that was included for illustrative purposes. The chapter discusses (1) the conditions necessary for failure (through-the-wall cracking) of a PWR pressure vessel as a result of a PTS transient, (2) the fracture-mechanics models used for evaluating vessel integrity, and (3) the results of probabilistic fracture-mechanics analyses of the two reactor vessels mentioned above. Supplementary information is included in Appendices G, H, and I.

The hypothetical vessel HBR-HYPO was created for these studies after it became apparent that the probability of failure of the HBR-2 reactor pressure vessel would be too small to permit an appropriate illustration of the methods of analysis. Values of the initial fracture toughness and of the concentrations of copper and nickel for the HBR-HYPO vessel were adjusted upward to increase the probability of failure; otherwise the two vessels are identical.

5.2. Description of Basic Problem

During a PTS transient in a pressurized-water reactor (PWR), the reactor pressure vessel is subjected to thermal shock in the sense that thermal stresses are created in the vessel wall as a result of rapid removal of heat from its inner surface. The thermal stresses are superimposed on the pressure stresses with the result that the net stresses are positive (tensile) at and near the inner surface of the wall and are substantially lower and perhaps negative elsewhere, depending on the magnitude of the pressure stress. The concern over the high tensile stresses near the inner surface is that they result in high stress intensity factors (K_I) for inner-surface flaws that may be present. To compound the matter, radiation damage and the reduced temperature associated with the thermal shock result in relatively low fracture-toughness values for the vessel material, particularly near the inner surface. Thus, there is a possibility of propagation of initially very shallow as well as deeper flaws, and the probability increases with time because of the time dependence of radiation damage.

The positive gradient in temperature and the negative gradients in stress and fluence through the wall tend to provide a mechanism for crack arrest. Even so, if the surface crack is very long and propagates deeply enough, the remaining vessel ligament will become plastic, and the vessel internal pressure will ultimately result in rupture of the vessel. Thus, for each thermal transient there will be a maximum permissible pressure that is a function of the time that the vessel has been in operation.

Crack propagation may also be limited by a phenomenon referred to as warm prestressing (WPS), which has been demonstrated to some extent in the laboratory with small specimens[1] and also in a rather large, thick-walled cylinder during a thermal-shock experiment.[2] In such cases, WPS simply refers to the inability of a crack to initiate while

K_I is decreasing with time, that is, while the crack is closing. While this special situation is encountered during some specific overcooling accidents, caution must be exercised in taking credit for WPS because changes in the pressure that affect little else can delay or eliminate the requisite conditions for WPS. For instance, a delay in WPS will generally increase the chances of crack initiation, while a reversal of $\dot{K}_I$ from negative to positive can result in crack initiation following WPS. An evaluation of the potential for initiation under this latter condition requires knowledge of a fracture-toughness value that may be substantially more than the standard measured value.[1] Unfortunately, sufficient data of this type are not available for inclusion in this study.

The area of the vessel of particular concern in the event of a PTS transient is the so-called beltline region, that is, the area directly across from the core where (1) the radiation damage is the greatest, (2) the thermal shock could be severe, and (3) a rupture of the vessel could preclude flooding of the core. Whether or not a particular degree of rupture associated with a particular transient could in fact preclude flooding of the core has not been determined but is under investigation.[3] For the purpose of this report, it is sufficient to predict whether a flaw will propagate completely through the wall of the vessel.

The radiation-induced reduction in fracture toughness of the vessel material is a function of the fast-neutron fluence and the concentrations of copper (a contaminant) and nickel (an alloying element). Furthermore, for the same values of fluence, copper and nickel, radiation damage tends to be greater in the welds that join the segments of the vessel than in the segments (base material). In most PWR vessels the highest concentrations of copper are found in the welds, and many of these welds have high concentrations of nickel as well. Thus, for some PWR vessels the welds are of primary concern. However, since the segments have a much larger surface area, they could have many more flaws, and this might offset the difference in radiation damage between segments and welds.

The beltline region of reactor pressure vessels is fabricated using either forged-ring segments or rolled-plate segments. Vessels made with forgings have only circumferential welds, while plate-type vessels have both circumferential and axial welds, as shown in Figure 5.1. Thus, within the beltline region of a plate-type vessel there are three basic subregions to consider: axial welds, circumferential welds and plate segments.

For flaw depths greater than ~20% of the wall thickness, axial flaws have significantly greater values of K_I than circumferential flaws. Thus, other things being equal, axial flaws in the plate segments and in the axial welds of plate-type vessels are of greater concern than circumferential flaws. Of course, differences in chemistry, fluence and initial fracture toughness could reverse that situation.

For plate-type vessels with staggered axial welds and for which radiation damage is much more severe in the welds than in the base material, the final surface length of a propagating inner-surface axial flaw in an axial weld tends to be limited to the length of the axial weld in which it resides, that is, the height of the shell course. Furthermore, only that portion of a weld that is within the axial bounds of the core need be considered because of the steep attenuation of the fast-neutron flux, and thus the radiation damage, beyond the fuel region.

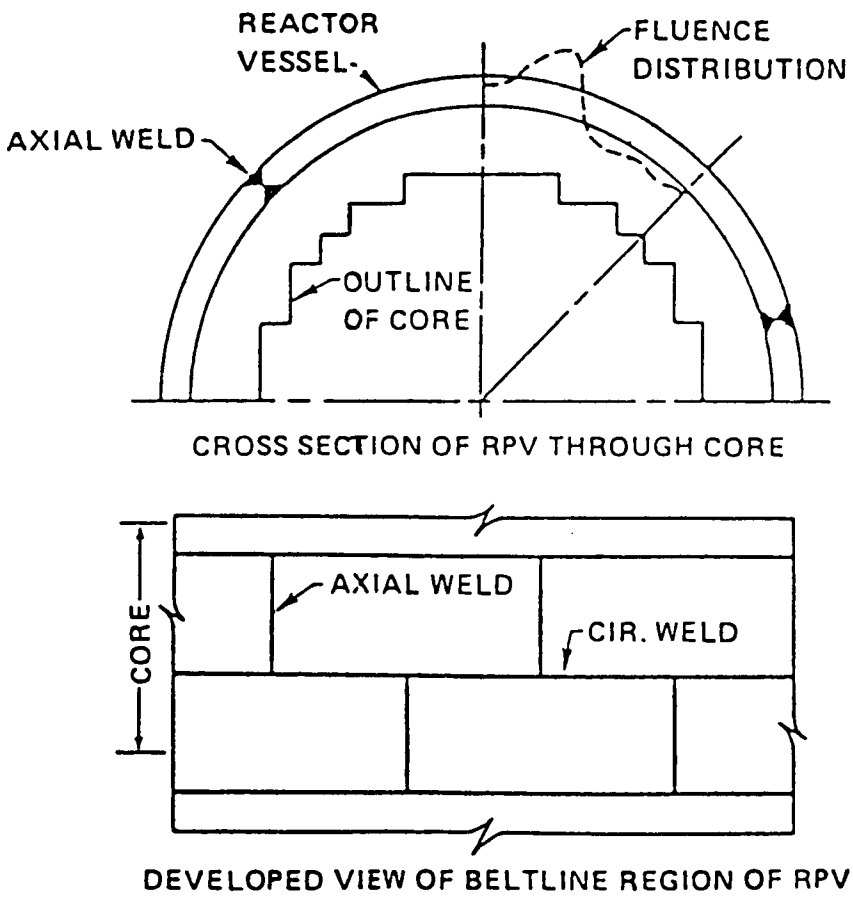

Figure 5.1. Cross section and developed view of plate-type PWR pressure vessel. (RPV = reactor pressure vessel.)

If the chemistry in adjacent plate segments is about the same, the extended surface length of an axially oriented flaw in a plate segment is also limited by the height of the core but not by the height of a shell course. Thus, the surface length of axial welds in plate segments can be much greater than those in axial welds.

Because of an azimuthal variation in the fast-neutron flux (see Figure 5.1) and possibly in the material chemistry, the extended length of an initially short, circumferentially oriented flaw located in a circumferential weld or in a plate segment also tends to be limited.

The behavior of an assumed flaw can be predicted for a given transient by using fracture-mechanics methods of analysis. In such an analysis the parameters and considerations involved are the size, shape, and orientation of the flaw; the thermal and pressure stresses resulting from a specific transient; the temperature and fast-neutron fluence distributions throughout the vessel wall; the effect of fluence and material chemistry on radiation damage; a variety of material properties; and a comparison of the stress intensity factor (K_I) associated with the tip of the flaw with the material's static crack-initiation and crack-arrest fracture-toughness values (K_{Ic} and K_{Ia}). Each of these factors must be considered in the development of an appropriate analytical model for evaluating the integrity

of a PWR vessel when subjected to PTS loading conditions. The necessary models for performing a probabilistic fracture-mechanics analysis for a PWR reactor pressure vessel and the results of the analyses for the HBR-2 and HBR-HYPO vessels are discussed in the remainder of this chapter.

5.3. Calculational Models

The conditional probability of vessel failure (through-the-wall cracking) was calculated for the HBR-2 and HBR-HYPO reactor pressure vessels with the OCA-P code, a fracture-mechanics code developed at ORNL for application to pressure vessels.[4] OCA-P accepts as input the primary system pressure, the temperature of the coolant in the reactor-vessel downcomer, and the fluid-film heat transfer coefficient adjacent to the vessel wall, all as a function of time in a specified PTS transient. The code then performs one-dimensional thermal and stress analyses for the vessel wall and finally a probabilistic fracture-mechanics analysis. Details of OCA-P necessary for an understanding of the vessel analyses included herein are discussed below.

5.3.1. Fracture-Mechanics Model

5.3.1.1. Basic approach

The fracture-mechanics (FM) model in OCA-P is based on linear elastic fracture mechanics (LEFM) and uses a specified maximum value of K_{Ia} to account for upper-shelf behavior. The stress intensity factor (K_I) is calculated by using superposition techniques in conjunction with influence coefficients calculated by finite-element techniques. The application of this procedure makes it possible to perform a large number of deterministic FM calculations at reasonable cost, a necessary condition for performing the probabilistic analysis.

5.3.1.2. Specific flaws included

The HBR-2 vessel was fabricated from sections of plate and has both axial and circumferential welds in the beltline region, as shown in Figures 5.2 and 5.3. The HBR-HYPO vessel was assumed to have the same configuration. For both configurations the length of flaws in the axial welds with depths greater than ~2 in. was assumed to be approximately the height of the intermediate shell course, and the shape was assumed to be semielliptical (this flaw is referred to as the 2-m flaw). Since the ends of this flaw are fixed, propagation was judged on the basis of the K ratios (K_I/K_{Ic}, K_I/K_{Ia}) at the deepest ends of this type of flaw. Deep axial flaws in the plate region were assumed to be two-dimensional (to have infinite length) since their surface length could extend the full length of the core, and deep circumferential flaws were also assumed to be two-dimensional.

Shallower flaws also were assumed to be two-dimensional, because long shallow flaws are essentially two-dimensional, and short flaws tend to grow on the surface to become long flaws,[5] at least in the absence of cladding. Because the effect of cladding on the surface extension of short flaws is not known at this time, any possible beneficial effect it may have has been discounted.

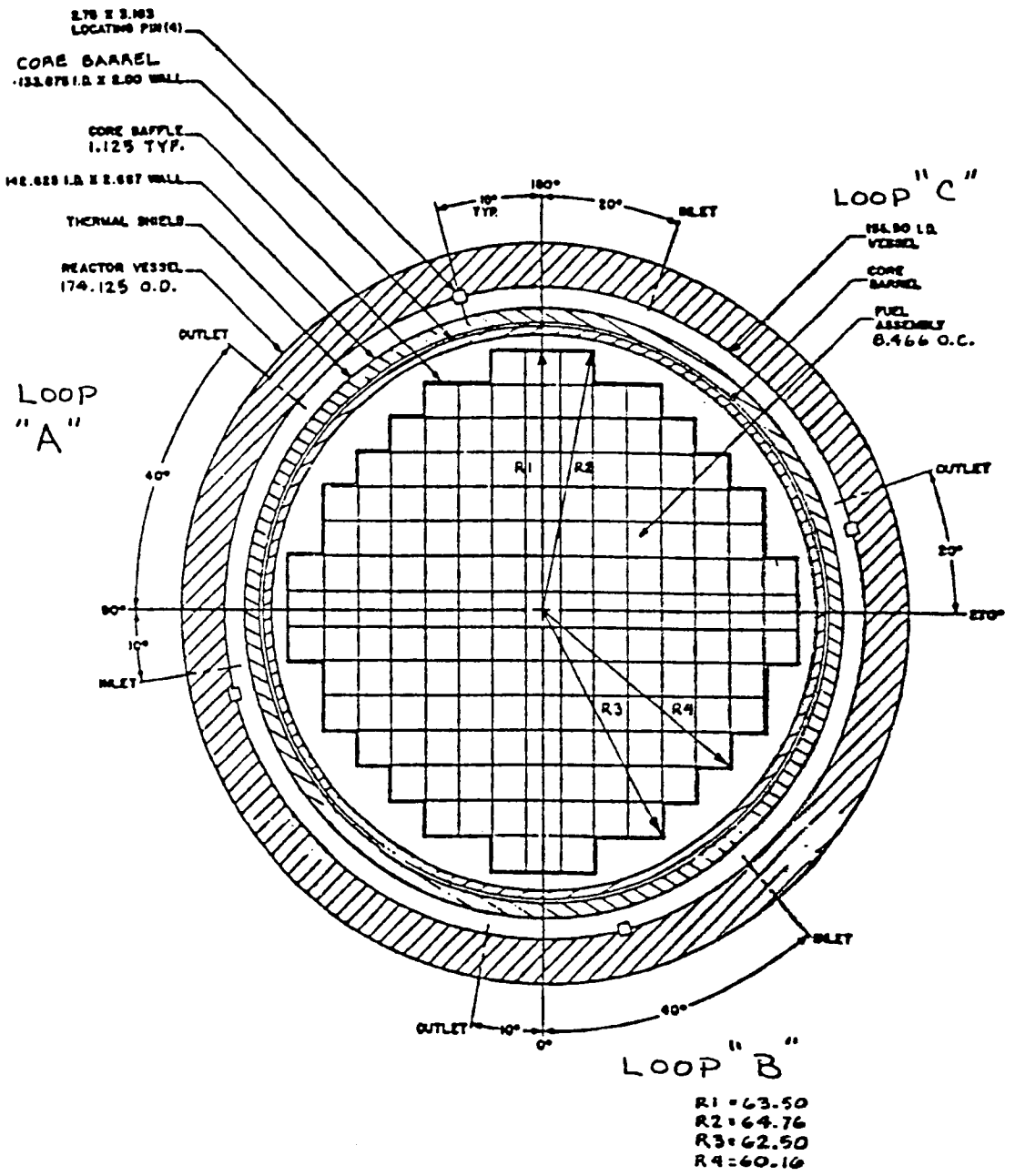

Figure 5.2. Cross section of HBR-2 reactor pressure vessel and core.

5.3.1.3. Cladding

As just noted, the effect of cladding on the surface extension of finite-length flaws was not considered. However, cladding on the inner surface of PWR pressure vessels was included in the OCA-P analysis as a discrete region to the extent that the thermal and stress effects were accounted for.

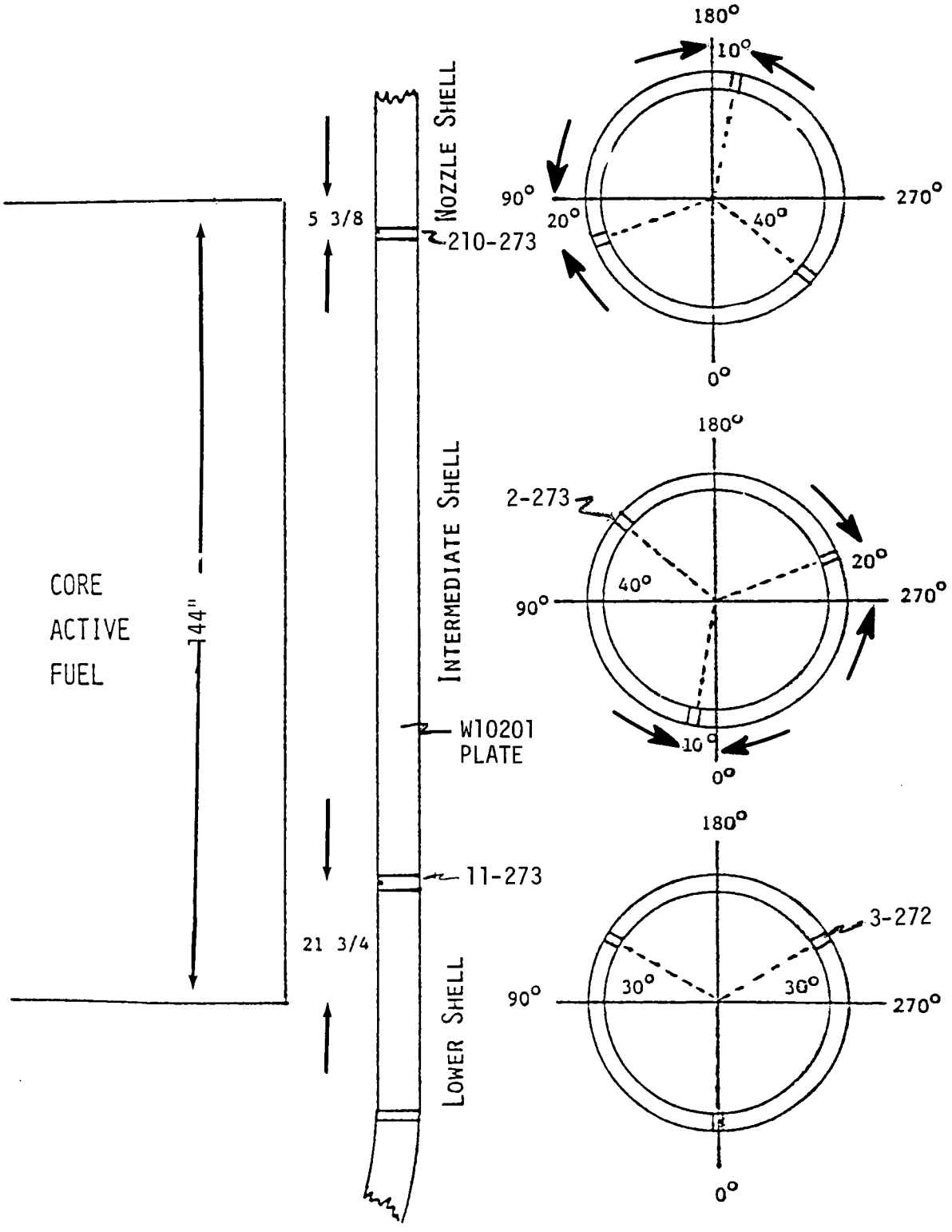

Figure 5.3. Schematic cross sections of HBR-2 reactor pressure vessel showing locations of welds in beltline region.

Because of the difference in the coefficient of thermal expansion between the cladding and base material, the calculated stresses in the cladding exceed the yield strength of the cladding by an appreciable amount, and this results in an overestimation of the K_I values for the flaws, which were assumed to terminate in the cladding or extend through the cladding into the base material. An alternative approach would be to limit the stress in the cladding to the yield stress, but this underestimates K_I because K_I is sensitive to the strain, which is not limited by the yielding phenomenon. The difference in K_I between these two extremes is not large; thus the conservative extreme was selected.

5.3.1.4. Material properties

Material properties required for the fracture-mechanics analysis include the static crack initiation and arrest toughness values (K_{Ic} and K_{Ia}) and the nil-ductility reference temperature *RTNDT*. For the probabilistic fracture-mechanics analysis, mean values of these parameters are required.

Mean values of K_{Ic} and K_{Ia} were obtained for the vessel material as follows:

$$\bar{K}_{Ic} = 1.43\{33.2 + 2.806 \ \exp[0.0200(T - RTNDT + 100)]\}, \text{ ksi } \sqrt{\text{in.}} \ , \tag{5.1}$$

$$\bar{K}_{Ia} = 1.25\{26.8 + 1.223 \ \exp[0.0145(T - RTNDT + 160)]\}, \text{ ksi } \sqrt{\text{in.}} \ , \tag{5.2}$$

where the quantity in braces represents the ASME Section XI[6] lower-bound toughness value, and T is the temperature at the tip of the flaw (in °F). These expressions were obtained by letting the ASME lower bound curves represent the mean values minus two standard deviations (2σ) and by letting $\sigma(K_{Ic}) = 0.15\ \bar{K}_{Ic}$ and $\sigma(K_{Ia}) = 0.10\ \bar{K}_{Ia}$.

In many cases, if crack arrest takes place, it must do so at upper-shelf temperatures, that is, at temperatures that, under static loading conditions, result in ductile rather than brittle behavior of the material. Crack arrest under these conditions is not well understood but has been included in an approximate manner by specifying a maximum value of K_{Ia} that corresponds to the upper portion of an upper-shelf tearing resistance curve. As illustrated in Figure 5.4, which is a plot of K vs crack depth (a) and temperature (T) at a specific time in a transient, if the load line (K_I vs a, T) intersects the K_{Ia} curve at $K_{Ia} < (K_{Ia})_{max}$, upper-shelf temperatures are not encountered. If, on the other hand, the load line misses the rising portion of the K_{Ia} curve and then decreases, as it does for some transients, there is, according to the model, a possibility of crack arrest at upper-shelf temperatures.

The tearing resistance curve selected for this study represents a specific high-copper, low-upper-shelf weld material that had been irradiated to a fluence of $\sim 1.2 \times 10^{19}$ neutrons/cm^2 at a temperature of ~550°F and tested at 390°F.[7] The upper, nearly flat portion of this curve corresponds to a K_J value of ~200 ksi $\sqrt{\text{in.}}$, and this value was used for $(K_{Ia})_{max}$; K_J was obtained using the relation

$$K_J = \sqrt{JE} \ , \tag{5.3}$$

where

J = strain energy release rate,

E = Young's modulus.

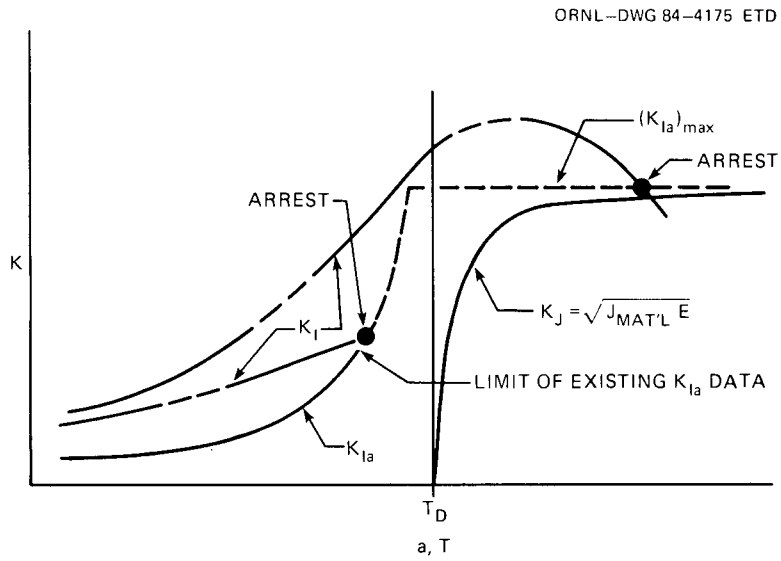

Figure 5.4. Illustration of a method of selecting $(K_{Ia})_{max}$.

The tearing resistance of PWR vessel materials tends to decrease with increasing temperature and fluence, and thus the effects of temperature and fluence tend to compensate for each other through the wall of the vessel. Because of this and the very approximate nature of the treatment of arrest on the upper shelf, no attempt was made to account more accurately for the effects of temperature and fluence on $(K_{Ia})_{max}$.

As indicated in a later section of this report (Section 5.4), the copper concentrations in the HBR-2 vessel are low relative to that associated with the above tearing resistance curve. Thus, a somewhat higher value of $(K_{Ia})_{max}$ could have been used. However, at the conclusion of the HBR-2 studies the sensitivity of the results to $(K_{Ia})_{max}$ over the range 200 to 300 MPa ksi $\sqrt{\text{in.}}$ was investigated for the HBR-2 dominant transients and was found to be negligible. Therefore, the use of a low value of $(K_{Ia})_{max}$ was of no consequence.

The nil-ductility reference temperature ($RTNDT$) is equal to the sum of an initial (zero fluence) value ($RTNDT_0$) and an increase due to radiation damage ($\Delta RTNDT$); that is,

$$RTNDT = RTNDT_0 + \Delta RTNDT \ . \tag{5.4}$$

The correlation for $\overline{\Delta RTNDT}$, the mean value of $\Delta RTNDT$, used in these studies was recently proposed by Randall[8] and is

$$\overline{\Delta RTNDT} = [-10 + 470\ \mathrm{Cu} + 350\ \mathrm{Cu}\ \mathrm{Ni}]\ F \times 10^{-19})^{0.27}\ ,\ {}^{\circ}\mathrm{F}\ , \tag{5.5}$$

or

$$\overline{\Delta RTNDT} = [283(F \times 10^{-19})^{0.194} - 48],\ {}^{\circ}\mathrm{F}^{*}\ , \tag{5.6}$$

whichever is smaller, where

F = fast-neutron fluence (neutron energy > 1 MeV) $\leqslant 6 \times 10^{19}$ neutrons/cm^2,

Cu, Ni = concentrations of copper and nickel, wt%.

(As indicated later, it is sometimes convenient to make reference to the value of *RTNDT* at the inner surface of the vessel. This value is referred to herein as $RTNDT_s$.)

Equations (5.5) and (5.6) were derived without distinguishing between weld and base material. A more recent attempt to correlate the data does differentiate between the two materials, and the results indicate (1) substantially less damage for the base material than for welds and (2) greater damage for the welds than indicated by Eq. (5.5).[8] For this study, Eqs. (5.5) and (5.6) were used for the weld material, and a differential between weld and plate material was obtained from the most recent correlations[8] and was applied in the evaluation of flaw behavior in the base material.

The attenuation of the fluence through the wall of the vessel is approximated with

$$F = F_0 e^{-0.24a}\ , \tag{5.7}$$

where F_0 is the fluence at the inner surface of the vessel and a is the crack depth in inches. The specific value of the coefficient in the exponent accounts to some extent for the effect of space-wise spectral changes on radiation damage.[8]

If the assumption is made that a short and shallow surface flaw can extend on the surface through the cladding to become a long flaw (and this assumption is made for these studies), then it must be assumed that under the proper circumstances a very shallow flaw that initially resides entirely within the cladding can propagate radially. Unfortunately, the fracture-toughness properties of the cladding material are very uncertain and are known to be dependent on the cladding-application process; however, the few experimental data that are available indicate that the radiation-induced reduction in fracture toughness can be similar to that for the base material. As an expediency, which may or may not be conservative, it was assumed that the cladding has the same fracture-toughness properties as the base material [Eqs. (5.1), (5.2), (5.5) and (5.6)]. In the OCA-P analysis, assumptions regarding the fracture behavior of the cladding influence only the initiation of very

*Reg. Guide 1.99 Rev. 1 high-fluence upperbound minus 2σ (i.e. 48°F).

shallow flaws that initially terminate in the cladding. Under some circumstances, including the above assumption regarding the fracture toughness of the cladding, these shallow flaws will initiate and result in vessel failure. Therefore, it was necessary to include the fracture properties of the cladding.

5.3.1.5. Warm prestressing

As mentioned in Section 5.2, crack initiation cannot take place while $\dot{K}_I < 0$. However, if, following a period of $\dot{K}_I < 0$, K_I once again increases with time, crack initiation can take place, but the critical value of K_I may be substantially more than the standard measured value (K_{Ic}). This latter situation leads to one of two problems associated with the inclusion of WPS in the fracture-mechanics model: appropriate fracture-toughness data are not yet available. The other problem is more specific to this particular study. The relatively few transients for which detailed fracture-mechanics calculations are made represent categories of transients for which the pressure histories are not necessarily well defined, and, as indicated in Section 5.2, variations in the pressure history can prevent or delay WPS. For these reasons it was not considered prudent to include the effects of WPS in the basic study. However, the possible effect of WPS was evaluated for the dominant transients to the extent of not allowing crack initiation while $\dot{K}_I < 0$, provided, following this period, K_I did not exceed the previous value of $(K_I)_{max}$.

5.3.1.6. Flaw behavior depicted with critical-crack-depth plots

The deterministic fracture-mechanics model described above is used in OCA-P to predict the behavior of a flaw during a specified PTS transient at a specified time in the life of the vessel, and the calculated behavior can be illustrated with a set of critical-crack-depth curves similar to those shown in Figure 5.5. This figure consists of a plot of crack depths corresponding to various events and conditions as a function of the time in the transient at which the events or conditions take place or exist. Figure 5.5 includes (for 2-D, axially oriented flaws only) the locus of points for $K_I = K_{Ic}$ (crack-initiation curve), $K_I = K_{Ia}$ (crack-arrest curve), $K_I = (K_I)_{max}$ (warm prestress curve with $K_I = 0$), and K_I = constant (iso K_I curves). For times less than those indicated by the WPS curve, crack initiation will take place, but for greater times initiation will not take place unless perhaps there is a perturbation in K_I that negates the requisite conditions for WPS.

The dashed lines in Figure 5.5 indicate the behavior of two initially shallow flaws, ignoring the effects of WPS. The deeper flaw would initiate at a time of 42 min into the transient and would extend through the wall without arresting. The other flaw would initiate at an earlier time, would arrest at a point 36% of the way through the wall, and then would reinitiate at a time of ~88 min and penetrate the wall. Earlier in the life of the vessel the tendency for complete penetration of the wall is less.

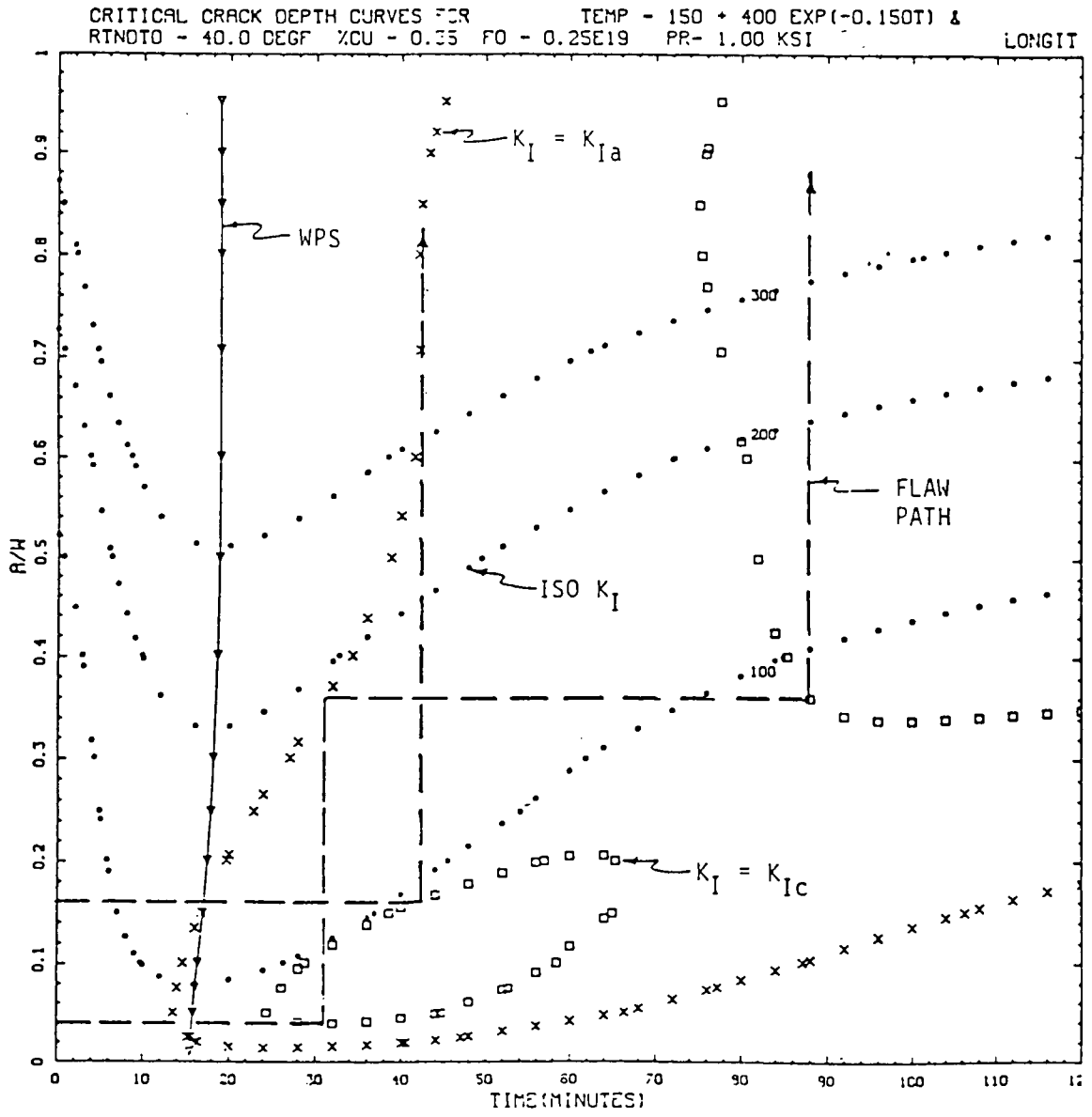

Figure 5.5. Critical-crack-depth curves for a typical postulated PTS transient.

5.3.1.7. *RTNDT* as the independent variable

For the probabilistic fracture-mechanics analysis (see Section 5.3.4), it is convenient to let $RTNDT_s$ be the independent variable rather than Cu, Ni, F_0 and $RTNDT_0$. This can be accomplished by ignoring Eq. (5.6) and combining Eqs. (5.5) and (5.7) to obtain

$$\Delta RTNDT(a) = \Delta RTNDT_s e^{-0.065a} \quad , \tag{5.8}$$

where

$$\Delta RTNDT_s = \Delta RTNDT \text{ at inner surface,}$$

$$\Delta RTNDT(a) = \Delta RTNDT \text{ at tip of flaw,}$$

$$a = \text{depth of flaw, in.}$$

This relation, in combination with Eq. (5.4), can be used directly in Eqs. (5.1) and (5.2) without having to specify Cu, Ni and F_0. However, when $RTNDT_s$ is being calculated for a specific reactor vessel for comparison with results of a probabilistic analysis that uses $RTNDT_s$ as the independent variable, only Eq. (5.5) should be used so as to maintain consistency. Furthermore, the results of the fracture-mechanics analysis are somewhat sensitive to the value of $RTNDT_0$ and for additional reasons can be significantly different than those obtained using Cu, Ni, and F_0 and $RTNDT_0$ as independent variables (see Appendix G).

5.3.2. Stress-Analysis Model

When the superposition technique is used in combination with influence coefficients to calculate K_I, the stresses required are those at the crack plane in the absence of the crack and with no variation in the direction of the length of the crack. For the analyses discussed herein, it was assumed that there was no azimuthal variation as well, and thus the one-dimensional stress analysis model incorporated in OCA-P was adequate.

Material properties required for the stress analysis included the coefficient of thermal expansion (α), Young's modulus (E), and Poisson's ratio (ν). Although these properties have some temperature dependence, it was determined[9] that the use of appropriate average values results in an error in the calculated value of K_I of less than 10%. Thus, average values were used based on the data in Ref. 10. The values used are as follows:

Property	Base Material	Cladding
$\bar{\alpha}$, °F^{-1}	8.0×10^{-6}	9.9×10^{-6}
$\bar{E}$, ksi	2.8×10^4	2.7×10^4
$\bar{\nu}$	0.30	0.30

5.3.3. Thermal-Analysis Model

Temperatures in the wall of the vessel are required for two purposes: to calculate the fracture toughness and to calculate the thermal stresses. The temperatures required for determining the fracture toughness are those in the plane of the flaw, while those used in the one-dimensional analysis of the thermal stresses must represent some type of average distribution through the wall. The thermal stresses in the vicinity of the crack plane are more sensitive to the radial temperature distribution at the crack plane than elsewhere. Since these temperatures are the same as those needed for the fracture-toughness determinations, and since only one set of temperatures was to be used for both the stress and

toughness calculations, the local temperatures would be the choice. These particular temperatures were not available, but fortunately the results of the thermal-hydraulic analysis indicated that for the transients of interest there was not much azimuthal variation in the downcomer coolant temperature. Thus, the time-dependent temperature distributions in the wall of the vessel were calculated with the one-dimensional thermal-analysis model in OCA-P, using average downcomer coolant temperatures and heat transfer coefficients.

Material properties required for the thermal analysis include the thermal conductivity (k), specific heat (c_p), and density (ρ) of the vessel material. The values used are as follows:

Property	Base Material	Cladding
k	24.0	10.0 Btu/hr·ft^2·°F
c_p	0.12	0.12 Btu/lb·°F
ρ	489	489 lb/ft^3

5.3.4. Probabilistic-Analysis Model

The OCA-P probabilistic model, which is similar to that developed by Gamble and Strosnider,[11] is based on Monte Carlo techniques; that is, a large number of vessels is generated, and each vessel is then subjected to a fracture-mechanics analysis to determine whether the vessel will fail. Each vessel is defined by randomly selected values of several parameters that are judged to have significant uncertainties associated with them. The calculated probability of vessel failure is simply the number of vessels that fail divided by the total number of vessels generated. It constitutes a conditional probability of failure, $P(F|E)$, because the assumption is made that the PTS transient (event) takes place. A logic diagram summarizing the various steps in the OCA-P probabilistic analysis is shown in Figure 5.6.

The parameters simulated for the analyses discussed herein are crack depth (a), $RTNDT$, K_{Ic}, and K_{Ia}. Normal distributions were assumed for each of these parameters except the crack depth; the standard deviations and truncation values used in the analysis are included in Table 5.1.

When $RTNDT_s$ is used as the independent variable (see Section 5.3.1.7), it is necessary to account for the distribution in $\Delta RTNDT$ due to the distributions in Cu, Ni and F_0. As discussed in Appendix G, the distribution in $\Delta RTNDT$ is dependent on the mean values of Cu, Ni and F_0, and an "average" normal distribution was used with the standard deviation given in Table 5.1.

The advantage in using $RTNDT_s$ as the independent variable in the probabilistic fracture-mechanics analysis is that a normalized value of $P(F|E)$, referred to as $\hat{P}_j$, vs $RTNDT_s$ can be determined for the different flaw types (infinite and finite-length axial and circumferential flaws) for all of the transients of interest, independent of specific values of Cu, Ni and F_0. Once these curves are available, they can be used for any reasonable set of Cu, Ni, and F_0 values, thus allowing a determination of $P(F|E)$ for more than one vessel

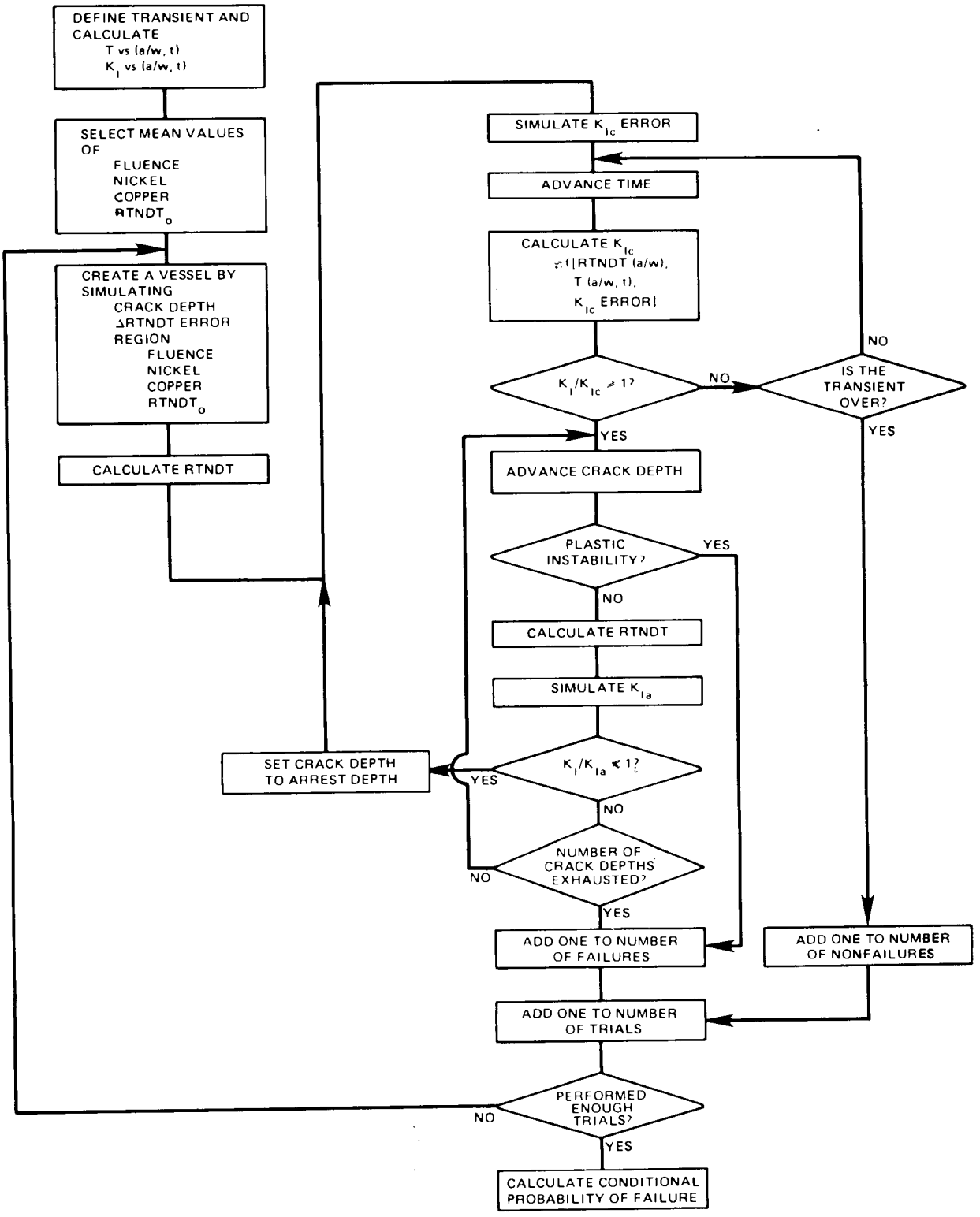

Figure 5.6. OCA-P program logic.

Table 5.1. Parameters simulated in OCA-P

Parameter	Standard Deviation[a] (σ)	Truncation
Fluence (F)	0.3 $\mu(F)$	$F = 0$
Copper	0.025%	0.4%
Nickel	0.0	—
$RTNDT_0$	17°F[b]	[b]
$\Delta RTNDT^c$	24°F[b,c]	[b]
$\Delta RTNDT^d$	0.14 $\mu(\Delta RTNDT)^d$	$\pm 3\sigma$
K_{Ic}	0.15 $\mu(K_{Ic})$	$\pm 3\sigma$
K_{Ia}	0.10 $\mu(K_{Ia})$	$\pm 3\sigma$

[a]Normal distribution used for each parameter.

[b]$\sigma_{(RTNDT)} = \sigma^2_{(RTNDT_0)} + \sigma^2_{(\Delta RTNDT)}{}^{1/2}$, truncated at $\pm 3\sigma$.

[c]Accounts for uncertainty in correlation.

[d]Accounts for uncertainty in Cu, Ni and F_0 when $RTNDT_s$ is used as independent variable.

without a detailed analysis, provided that the same transients are appropriate for both vessels. It is only necessary to (1) calculate $RTNDT_s$ for each region of interest (defined by specific values of Cu, Ni, F_0, and $RTNDT_0$) using Eqs. (5.4) and (5.5); (2) determine $\hat{P}_j$ from the $\hat{P}_j$ vs $RTNDT_s$ curves; and (3) determine $P(F|E)$ from

$$P(F\,|\,E) = \sum_j \hat{P}_j(F\,|\,E)N_jV_j \ , \tag{5.9}$$

where j refers to each of the regions considered, $\hat{P}$ is the probability based on one flaw per region, N is the flaw density, and V is the volume of the region.

In Figure 5.6 the second and third boxes are somewhat different when $RTNDT_s$ is used as the independent variable. For both boxes, Cu, Ni and F_0 are replaced with $\Delta RTNDT_s$.

The probability of having a flaw in a specific region with a depth in a specific range of crack depths Δa_i is given by

$$P(\Delta a_i) = NV\int_{\Delta a_i} f(a)B(a)da \ , \tag{5.10}$$

where

N = number of flaws of all depths per unit volume of a specific region,

V = volume of the specific region,

$f(a)$ = flaw-depth density function,

$B(a)$ = probability of nondetection.

The parameters N and $f(a)$ pertain to vessel conditions prior to preservice inspection and repair, and $B(a)$ is derived on the basis of repairing or otherwise disposing of all detected flaws.

The value of N and the functions $f(a)$ and $B(a)$ are not well known because most of the available inspection data do not pertain to surface flaws that extend into and through the cladding of a PWR pressure vessel. For the analyses discussed herein, the functions $f(a)$ and $B(a)$ were those suggested in the Marshall report[12] and are as follows:

$$f(a) = 4.1e^{-4.1a} \ , \tag{5.11}$$

$$B(a) = 0.005 + 0.995e^{-2.87a} \ , \tag{5.12}$$

where

a = crack depth, in.,

$\int_0^\infty f(a)da$ = 1.

For the HBR-2 vessel the probability of nondetection, $B(a)$, should probably be set equal to unity, independent of a, because the reliability of inspections for flaws in and extending a short distance beyond the cladding has not been quantified. Furthermore, it is not likely that any detected flaws of this type were repaired. Even so, Eq. (5.10) was used in the analysis of the HBR-2 and HBR-HYPO. If $B(a) = 1$ were used instead, $P(F|E)$ would be about twice as much. Thus, the results of this study can be interpreted accordingly.

The value of N used in these studies was 0.03 flaw/ft^3 (1 flaw/m^3) of weld and base material, and it was assumed that all flaws were inner-surface flaws normal to the surface. Flaws in welds were oriented in the length-direction of the weld, while those in the plate segments were oriented axially. The assumed value of the flaw density agrees with that suggested in the Marshall report,[12] but the uncertainty is considered to be very large (values of N corresponding to 1σ variations are estimated to be 3×10^{-4} and 3 flaws/ft^3).

The volume (V) of a weld or plate segment used for calculating the number of surface flaws was the total volume of that portion of the weld or segment that was nearly within the axial confines corresponding to the active length of the core.

As mentioned above, the calculated probability of vessel failure for this study is the number of simulated vessels calculated to fail divided by the total number of vessels simulated or otherwise accounted for. Thus,

$$P(F\,|\,E) = \sum_j \hat{P}_j V_j N \int_0^w f(a)B(a)da \ , \tag{5.13}$$

where

$$\hat{P}_j = \frac{N'_{fj}}{N'_{vj}},$$

N'_{fj} = number of vessels with a flaw in the jth region that fail,

N'_{vj} = number of vessels simulated with a flaw in the jth region,

V_j = volume of jth region.

The integral in Eq. (5.13) accounts for the vessels that have no flaws whatsoever, and each term in Eq. (5.13) represents the contribution to $P(F|E)$ of each specified region of the vessel.

For very small values of $P(F|E)$, the values of N'_{vj} required to achieve reasonable accuracy becomes quite large. Under some circumstances the value of N'_{vj} can be reduced by using importance sampling techniques. This was done in some cases by eliminating flaw depths that did not contribute significantly to initiation and by sampling only the tails of the *RTNDT* and Δ*RTNDT* distribution functions. In each of these cases the portion of the distribution function not sampled is accounted for by multiplying the number of simulated vessels, N'_{vj}, by a correction factor. Equation (5.13) then becomes

$$P(F\,|\,E) = \sum_j \frac{\hat{P}_j}{F_{1j} \cdot F_{2j} \cdot F_{3j}} V_j N \int_0^w f(a)B(a)da \ , \tag{5.14}$$

where

F_{1j} = correction factor for flaw-depth density function,

F_{2j} = correction factor for Δ*RTNDT* distribution,

F_{3j} = correction factor for *RTNDT* distribution.

For these studies, when importance sampling was used for the flaw-depth density function, only the first flaw-depth increment was omitted. Thus,

$$F_1 = \frac{1}{\int_{\Delta a_1}^w f(a)B(a)da} = 3.24 \ . \tag{5.15}$$

When importance sampling is applied to the Δ*RTNDT* and *RTNDT* distribution functions, only those portions of the distributions above 1σ were used, and as indicated in Table 5.1,

these distributions were truncated at 3σ. Table 5.2 gives the corresponding values of F_2 and F_3 as a function of the point on the distribution curve at which sampling is commenced. As indicated, if the distribution is sampled above 1σ, $F = 6$, and if it is sampled above 2σ, $F = 46$. If both $\Delta RTNDT$ and $RTNDT$ are sampled only above 1.25σ, and if the first crack-depth increment can be omitted, $F_1 \times F_2 \times F_3 \simeq 300$, which represents a significant savings in computer costs for the same accuracy in $P(F|E)$. Of course this type of importance sampling can only be used when the first crack-depth increment does not contribute much to $P(F|E)$, and when $P(F|E)$ is small enough that only the tails of the $\Delta RTNDT$ and $RTNDT$ distribution functions contribute significantly to $P(F|E)$.

Table 5.2. Values of F_2 and F_3 associated with importance sampling of $\Delta RTNDT_s$ and $RTNDT$ distributions

Identifying Number (*NDLRS* or *NRTRS*)	Start-of-Sampling Number of Standard Deviations Above Mean	Fraction of Distribution Not Simulated[a]	F_2, F_3
1	1.0	0.8422	6.3
2	1.25	0.8954	9.6
3	1.50	0.9343	15.2
4	1.75	0.9611	25.7
5	2.00	0.9784	46.4
6	2.25	0.9891	91.7
7	2.50	0.9951	204.1
8	2.75	0.9983	588.2

[a]Assuming truncation at $\pm 3\sigma$.

After the specified number of vessels has been simulated, a deterministic analysis is made for each vessel to determine if failure will occur during a particular transient at a specified time in the life of the plant. The criterion by which failure is judged is as follows: if, following an initiation event, K_I remains greater than K_{Ia} up to or beyond the point at which plastic instability occurs in the remaining ligament, failure is assumed. The onset of plastic instability is evaluated on the basis of achieving an average pressure stress in the remaining ligament equal to the flow stress. The flow stress is assumed to be independent of temperature and fluence and is specified as 80 ksi.

The number of vessels that must be simulated depends upon the accuracy required for the calculated value of $P(F|E)$, and as small a number as practical is used to minimize computer costs. The minimum number of simulated vessels required to satisfy a specified

accuracy is estimated by applying the central limit theorem.[13] Using this approach and specifying a 95% confidence level yields

$$P(F\,|\,E)_j = \hat{P}_j NV_j \int_0^w f(a)B(a)da \pm 1.96\sigma_j \ , \tag{5.16}$$

where

$P(F|E)_j$ = true value of the conditional probability of vessel failure for those vessels having flaws in the jth region only,

σ = one standard deviation,

$\hat{P}_j$ = N'_{fj}/N'_{vj}.

For the direct approach (not using importance sampling),

$$\sigma_j = \left[\frac{\hat{P}_j(1-\hat{P}_j)}{N'_{vj}}\right]^{1/2} NV_j \int_0^w f(a)B(a)da \ . \tag{5.17}$$

When importance sampling is used,

$$\sigma_j \simeq \left[\frac{\hat{P}_j(1-\hat{P}_j)}{N'_{vj}}\right]^{1/2} \frac{NVj}{F_{1j}\cdot F_{2j}\cdot F_{3j}} \int_0^w f(a)B(a)da \ . \tag{5.18}$$

The value is σ corresponding to all of the vessels simulated is

$$\sigma_{P(F\,|\,E)} = \left(\sum_j \sigma_j^2\right)^{1/2} , \tag{5.19}$$

and the error, ϵ_j, associated with the jth region is

$$\epsilon_j = \frac{1.96\sigma_j}{\hat{P}_j NV_j \int_0^w f(a)B(a)da} \ . \tag{5.20}$$

For $\hat{P}_j << 1$,

$$\epsilon_j = 1.96\left(\frac{1}{\hat{P}_j N'_{vj}}\right)^{1/2} = 1.96\left(\frac{1}{N'_{fj}}\right)^{1/2} \ . \tag{5.21}$$

The total error, ϵ, considering all regions of interest is

$$\epsilon = \frac{1.96\,\sigma_{P(F|E)}}{\sum_j \hat{P}_j N V_j \int_0^w f(a)B(a)da} \quad . \tag{5.22}$$

It is of interest to note (Eq. 5.21) that the error for a single region, ϵ_j, is only a function of N'_{fj}. According to Refs. 14 and 15, for the estimate of ϵ_j to be reasonably accurate, N'_{fj} should be greater than 5 (Ref. 14) or 9 (Ref. 15). However, when the total error is calculated (Eq. 5.22), this rule needs to be adhered to strictly only for those regions that contribute significantly to $P(F|E)$.

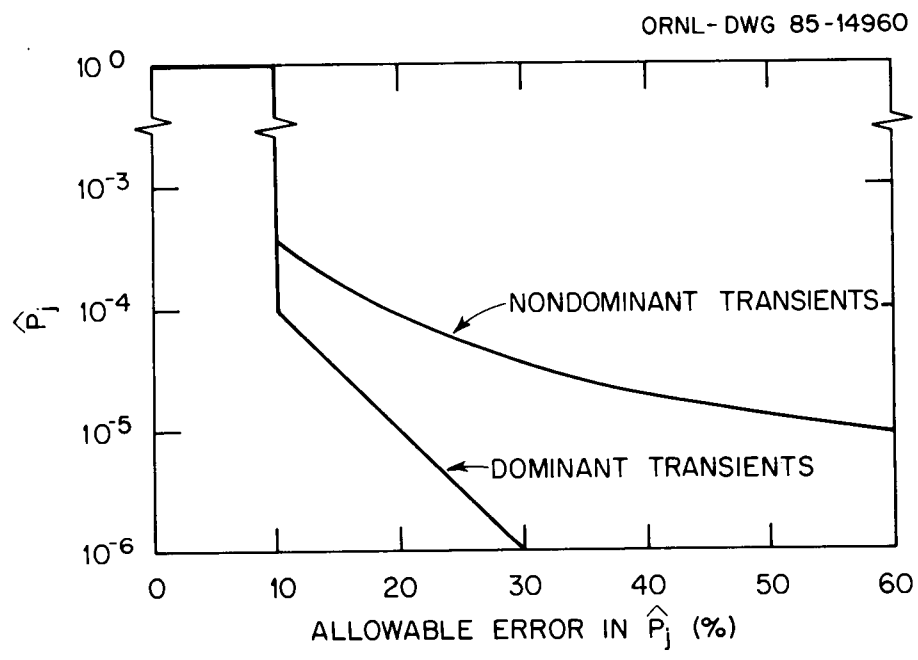

Figure 5.7. Allowable error in $\hat{P}_j$.

In order to keep computer costs within reasonable bounds for the PTS studies, the permissible error in $\hat{P}_j$ was allowed to increase with decreasing $\hat{P}_j$, and in general, as shown in Figure 5.7, larger errors were permitted for the nondominant transients than for the dominant transients. The value of N'_{vj} and the extent of importance sampling were selected so as to satisfy these criteria. An exception was in the sensitivity analysis since, in some cases, better accuracy was required.

5.4. Flaw-Related Data for the HBR-2 and HBR-HYPO Pressure Vessels

As has already been mentioned (Sections 5.2 and 5.3.1), the areas of the vessel of particular concern with regard to flaw propagation are those in the beltline region and include the plate segments and the axial and circumferential welds. Fracture-mechanics data for these regions are included in Table 5.3 for HBR-2 and in Table 5.4 for HBR-HYPO. A comparison of these two tables shows that the only difference between HBR-2 and HBR-HYPO are the values of Cu, Ni and $RTNDT_0$. Values of these parameters for HBR-HYPO were adjusted in a convenient and reasonable way so that at 32 EFPY, $RTNDT_s$ = 221°F for the region that contributed the most to $P(F|E)$ [this corresponds to $RTNDT(2\sigma)$ = 270°F].

The plate regions in Tables 5.3 and 5.4, for which only axially oriented flaws were considered, could have been divided further to take advantage of the azimuthal variation in fluence. However, it appeared, at least for HBR-HYPO, that the plate-region contribution to $P(F|E)$ would be small; thus, further refinement was not warranted.

Much of the data in Tables 5.3 and 5.4 was taken from Refs. 16, 17 and 18; values listed for Cu, Ni, F_0 and $RTNDT_0$ were considered to be mean values.

Table 5.3. Material properties, fluences and region volumes used in fracture-mechanics analysis of HBR-2 reactor vessel

Material Identification		Chemistry[a]		Neutron Fluence at Inner Surface,[b,c] 32 EFPY		Region Volume[d]		
Form	Number	Cu (wt%)	Ni (wt%)	(10^{19} n/cm^2)	$RTNDT_0$ (°F)	(ft^3)	$\overline{RTNDT_s}$ (°F)	$RTNDT_s(2\sigma)$ (°F)
Axial weld	1-273A	0.22	0.04	1.24	−56	0.14	46	105
	1-273B	0.22	0.04	0.82	−56	0.14	36	95
	1-273C	0.22	0.04	0.41	−56	0.14	19	78
	2-273A	0.22	0.04	3.15	−56	1.06	75	134
	2-273B	0.22	0.04	1.03	−56	1.06	41	100
	2-273C	0.22	0.04	2.07	−56	1.06	61	120
	3-273A	0.22	0.04	1.95	−56	0.28	59	118
	3-273B	0.22	0.04	1.27	−56	0.28	46	105
	3-273C	0.22	0.04	1.27	−56	0.28	46	105
Circumferential weld	10-273	0.17	1.0	1.64	−56	3.5	92	151
	11-273	0.19	0.8	1.95	−56	3.5	102	161
Plate	273-02	0.12	0.1	1.95	46	71	107	166
	273-03	0.12	0.1	4.16	46	330	121	180
	273-04	0.12	0.1	1.64	46	35	104	163

[a]Chemistry for welds specified in letter from A. B. Cutter (CP&L) to H. R. Denton (NRC), June 29, 1984. Copper in plate specified in letter from J. H. Phillips (CP&L) to J. D. White (ORNL), November 9, 1983. Nickel in plate specified by Neil Randall (NRC), July 20, 1984.

[b]Maximum value in region.

[c]Source: Letter from J H. Phillips (CP&L) to J. D. White (ORNL), November 9, 1983.

[d]Volume within high-fluence region.

Table 5.4. Material properties, fluences and region volumes used in fracture-mechanics analysis of the HBR-HYPO reactor vessel

Material Identification		Chemistry[a]		Neutron Fluence at Inner Surface,[a] 32 EFPY	$RTNDT_0$	Region Volume[a]	$\overline{RTNDT_s}$	$RTNDT_s$ (2σ)
Form	Number	Cu[b] (wt%)	Ni (wt%)	(10^{19} n/cm^2)	(°F)	(ft^3)	(°F)	(°F)
Axial weld	1-273A	0.22	0.80	1.24	0	0.14	164	223
	1-273B	0.22	0.80	0.82	0	0.14	147	206
	1-273C	0.22	0.80	0.41	0	0.14	122	181
	2-273A	0.22	0.80	3.15	0	1.06	211	270
	2-273B	0.22	0.80	1.03	0	1.06	156	215
	2-273C	0.22	0.80	2.07	0	1.06	189	248
	3-273A	0.22	0.80	1.95	0	0.28	186	245
	3-273B	0.22	0.80	1.27	0	0.28	165	224
	3-273C	0.22	0.80	1.27	0	0.28	165	224
Circum-ferential weld	10-273	0.22	0.80	1.64	0	3.5	177	236
	11-273	0.22	0.80	1.95	0	3.5	186	245
Plate	273-02	0.12	0.80	1.95	0	71	96	155
	273-03	0.12	0.80	4.16	0	328	118	177
	273-04	0.12	0.80	1.64	0	35	91	150

[a]Same as for HBR-2.

[b]Same as for HBR-2 with exception of circumferential weld.

5.5. Results of Analysis

Probabilistic fracture-mechanics analyses were performed for HBR-2 and HBR-HYPO to determine (1) $P(F|E) = f(\overline{RTNDT_s})$ and $P(F|E)$ at 32 EFPY for a number of HBR-2 transients, (2) the sensitivity of $P(F|E)$ to small changes in the mean values of certain parameters, (3) the effect of including warm prestressing, and (4) the effect on $P(F|E)$ of certain proposed remedial measures. The results of these efforts are presented below.

5.5.1. Calculation of Conditional Probability of Vessel Failure, $P(F|E)$

The specific transients considered for a detailed OCA-P analysis are described in Chapter 3. These transients were divided into two categories: (1) those with final coolant temperatures >300°F and (2) those with final coolant temperatures ≤300°F. Bounding-type calculations were made for the first category because the approach was much less expensive and because it was expected that the contribution of this category to the through-the-wall crack frequencies would be negligible. Transients for the bounding calculations were characterized by a constant pressure of 2.5 ksi, a step change in coolant temperature and a fluid-film heat-transfer coefficient of 400 Btu/hr·ft^2·°F. The results of these bounding calculations are shown in Figure 5.8.

All of the transients in the first category and the corresponding estimates of $P(F|E)$ at 32 EFPY are listed in Table 6.1 of Chapter 6 for HBR-HYPO. Values of $P(F|E)$ are not given for HBR-2 because they are much lower than those for HBR-HYPO and thus even more difficult to estimate. None of the transients in the first category contributed significantly to the through-the-wall crack frequencies for either HBR-2 or HBR-HYPO.

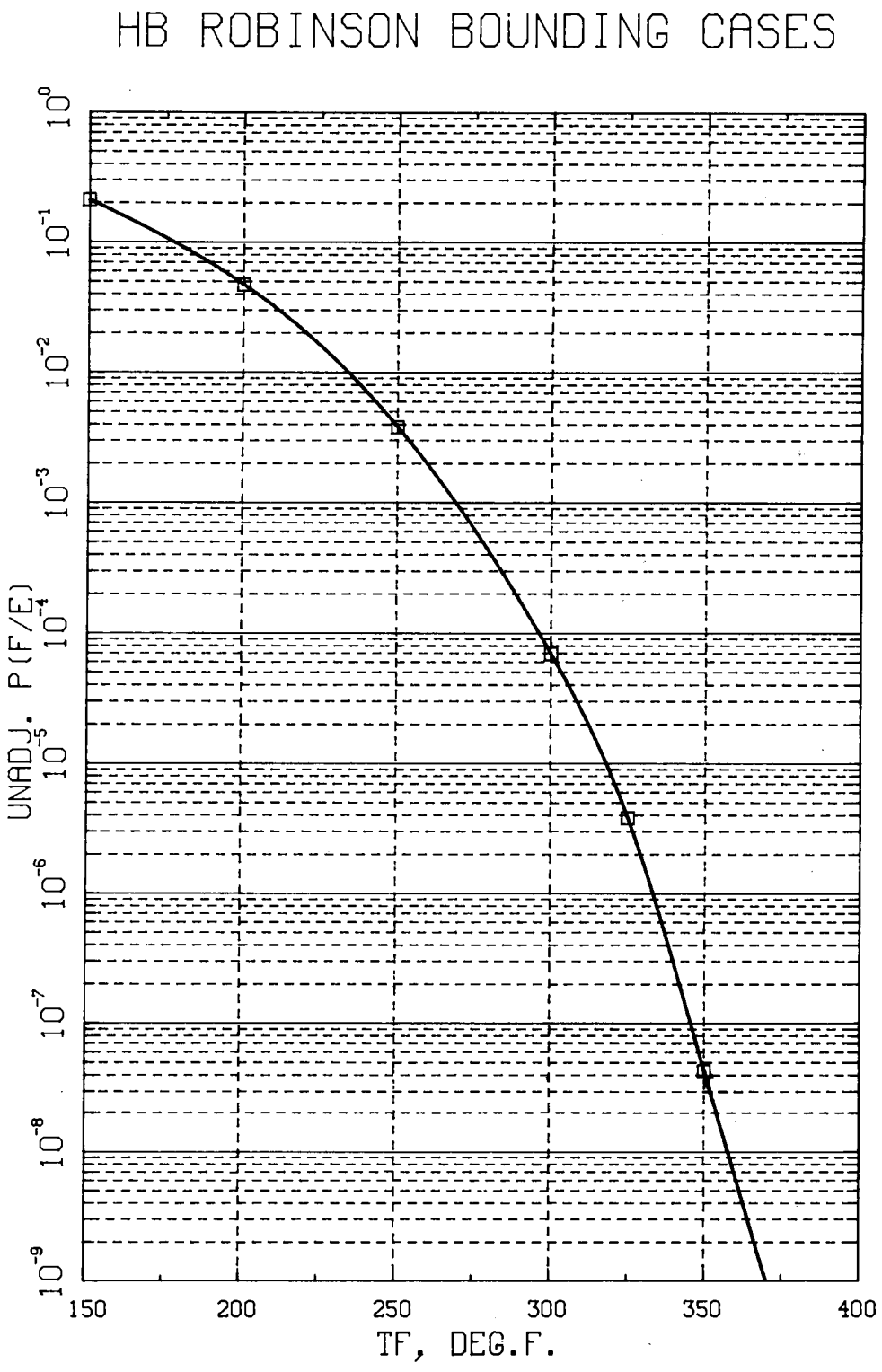

Figure 5.8. $\hat{P}_j \int_0^w f(a)B(a)da$ **vs** T_f **for HBR-HYPO bounding calculations.**

All of the transients in the second category and the corresponding estimated values of $P(F|E)$ at 32 EFPY are also listed in Table 6.1, for both HBR-2 and HBR-HYPO, and those with significantly high values of $P(F|E)$ and/or through-the-wall crack frequencies are listed in Table 5.5.

Table 5.5. Summary of calculated values of $P(F|E)$ for HBR-2 and HBR-HYPO at 32 EFPY

Transient	$P(F\|E)$, HBR-HYPO	Transient	$P(F\|E)$ HBR-2	$P(F\|E)$ HBR-HYPO
1.8	~1E−8	9.11A		<1E−7
1.9	<1E−10	9.11B		2.8E−5
2.1	<1E−9	9.12A		2E−7
3.1	<1E−10	9.12B		3.6E−5
4.1	<1E−9	9.14B		1.1E−5
5.15	5E−7	9.15B		1.2E−5
5.17	6E−7	9.17B		1.8E−4
5.19	2E−7	9.18B		8.6E−6
5.20	4.8E−6	9.19A		1E−7
6.6	3.7E−4	9.19B(3)[a]	5E−7	9.5E−5
6.9	1.0E−4	9.20A		1E−7
7.5	4.2E−6	9.20B(5)	5E−7	1.0E−4
7.6	1E−7	9.22A		<1E−6
7.8	6E−8	9.22B(6)	4E−5	5.5E−4
7.9	3.0E−6	9.23A		1E−6
7.10	9.3E−6	9.23B		1.3E−4
7.11	5.6E−5	9.26		2E−7
8.2	1.4E−6	9.28		3.9E−6
8.3	2E−7	9.32		1.8E−6
8.5	4E−7	9.33(2)	<1E−11	2E−7
8.6	6.6E−4	9.34		3E−7
9.4	8E−8	9.37		2E−7
9.5	1.5E−6	9.39		4E−7
9.6	<2E−9	9.40		1E−6
9.9A	<4E−9	9.41(1)	<1E−9	9E−7
9.9B	8E−7	9.42		1.2E−6
9.10A	<2E−8	9.43(4)	<1E−9	1.2E−5
9.10B	1.1E−6	9.45		5E−7

[a]Numbers indicate order of dominance in terms of the through-the-wall crack frequency for HBR-HYPO [i.e. frequency of transient × $P(F|E)$].

Values of $P(F|E)$ in Table 5.5 include the contributions from all of the vessel beltline regions listed in Table 5.4. For HBR-HYPO the contribution of the circumferential welds and of the plate segments was relatively small. However, because of the rather low values of Cu, Ni and $RTNDT_0$ for the HBR-2 welds, the plate regions were the dominant contributor to $P(F|E)$ for HBR-2, and the corresponding estimated values of $\hat{P}_j$ were quite low ($<10^{-6}$). Furthermore, and as a consequence of these low values, the estimates of the through-the-wall crack frequencies for HBR-2 are quite low ($<10^{-11}$). Therefore, values of $P(F|E)$ for HBR-2 were estimated for only a few of the transients in Table 5.5. The particular transients selected were the six that contributed the most to the through-the-wall crack frequencies for HBR-HYPO.

Summaries of more detailed results for the six dominant transients at 32 EFPY are presented in digital form in Tables 5.6–5.11, and similar summary sheets are included in Appendix I for all of the transients calculated.* Each summary sheet includes the data for a variety of histograms, and a set of four histograms for transient No. 22B is shown in Figures 5.9–5.12.†

Appendix I also includes for each transient calculated (1) a definition of the transient input to OCA-P (downcomer coolant temperature vs time, primary system pressure vs time, and fluid-film heat transfer coefficient at the vessel inner surface vs time); (2) curves of $\hat{P}_j \int_0^w f(a)B(a)da$ vs $\overline{RTNDT_s}$; (3) temperature distributions in the wall; (4) curves of K_I vs t for different crack depths; and (5) a set of critical-crack-depth curves for weld 2-273A based on 32 EFPY and mean values of all parameters except K_{Ic}, K_{Ia}, and $\Delta RTNDT$ which are -2σ values. Examples of these graphical outputs are shown in Figures 4.13–5.18 for transient No. 22B.

5.5.2. Sensitivity Analysis of $P(F|E)$

The sensitivity analysis was conducted by determining the change in $P(F|E)$ corresponding to a change in the mean value of each of several parameters. The mean value of only one parameter was changed at a time, while all other parameters retained their original mean values. The parameters changed were K_{Ic}, K_{Ia}, $RTNDT$, Cu, F_0, the fluid-film heat transfer coefficient (h), the downcomer coolant temperature (T_c), the primary system pressure (p), and the flaw density (N). The amount of the change for K_{Ic}, K_{Ia}, $RTNDT$, Cu, F_0, and N was one standard deviation, and the change for the other parameters was somewhat arbitrary. The sign of the change for all parameters was such that an increase in $P(F|E)$ occurred.

The values of σ used in the sensitivity analysis for K_{Ic}, K_{Ia}, $RTNDT$, Cu, and F_0 are listed in Table 5.1, and the value of the flaw density, N, corresponding to the application of $\pm 1\sigma$ was a factor of 100 from the original mean value. The change included in the sensitivity analysis for the downcomer coolant temperature consisted of a linear change in tem-

*It should be noted that only the summary sheets for the "B" cases are included in Appendix I for those sequences involving "A" and "B" cases.

†The reader should refer to Appendix I for explanation of summary sheets and histograms.

Table 5.6. Summary sheet for HBR-HYPO Transient No. 9.19B

IPTS H B ROB CLAD 9.19 7/6/84 1. FLAWS/IN**3 DRTN(IS) = 211.2

WELD	P(F/E)	95%CI	%ERR	P(INITIA)	N*V	P(F/E)	%ERR	NFAIL	NTRIALS
	----------UNADJUSTED----------					---ADJUSTED----			
1	2.51D-03	2.40D-04	9.55	2.90D-03	0.030	7.53D-05		415	30000
2	5.57D-04	5.45D-05	9.80	7.23D-04	0.030	1.67D-05		399	130000
					VESSEL	9.20D-05	8.02		

DEPTHS FOR INITIAL INITIATION (IN)

	0.09	0.26	0.46	0.67	0.90	1.16	1.44	1.74	2.08
NUMBER	0	575	258	111	40	10	4	0	0
PERCENT	0.0	57.6	25.9	11.1	4.0	1.0	0.4	0.0	0.0

TIMES OF FAILURE(MINUTES)

	0.0	10.0	20.0	30.0	40.0	50.0	60.0	70.0	80.0	90.0	100.0	110.0	120.0
PERCENT	0.0	0.0	0.0	0.4	1.4	5.8	15.1	20.3	21.8	14.0	12.0	9.1	

INITIATION T-RTNDT(DEG.F)

	-100.0	-75.0	-50.0	-25.0	0.0	25.0	50.0	75.0	100.0	125.0	150.0	175.0	200.0
NUMBER	0	3	32	355	506	448	352	68	0	0	0	0	
PERCENT	0.0	0.2	1.8	20.1	28.7	25.4	20.0	3.9	0.0	0.0	0.0	0.0	

ARREST T-RTNDT(DEG.F)

	-50.0	-25.0	0.0	25.0	50.0	75.0	100.0	125.0	150.0	175.0	200.0	225.0	250.0
NUMBER	0	6	36	16	3	1	46	448	394	0	0	0	
PERCENT	0.0	0.6	3.8	1.7	0.3	0.1	4.8	47.2	41.5	0.0	0.0	0.0	

ICRKTP = 2 IACCEL = 1 NDLRS = 0 NRTRS = 0 DATE: 11/17/84 TIME: 23.01.23

CPU TIME: 4 MIN 25 SEC

perature from zero at time zero to 50°F at a time corresponding to the minimum point in the temperature vs time curve. From then on, the change in temperature was a constant value of 50°F. The change in the heat transfer coefficient, h, was 0.25 h, and for the pressure it was 50 psi. (Changes not specifid as 1σ values are not necessarily 1σ values).

The results of the sensitivity study are presented in Table 5.12 for 32 EFPY. Table 5.12 includes (1) the values of $P(F|E)_0$, the original mean values of $P(F|E)$, and (2) the ratio $P(F|E)_I/P(F|E)_0$, where $P(F|E)_I$ is the increased value of $P(F|E)_0$ due to a change in a simulated parameter.

It is of interest to note that the sensitivities are dependent on the transients, and that $P(F|E)$ is most sensitive to the uncertainty in N and is least sensitive to the uncertainty in the arrest toughness and the heat transfer coefficient.

Table 5.7. Summary sheet for HBR-HYPO Transient No. 9.20B

IPTS H B ROB CLAD 9.20B 10/31/84 1. FLAWS/IN**3 DRTN(IS) = 211.2

WELD	UNADJUSTED P(F/E)	95%CI	%ERR	P(INITIA)	N*V	ADJUSTED P(F/E)	%ERR	NFAIL	NTRIALS
1	2.51D-03	2.40D-04	9.54	2.99D-03	0.030	7.54D-05		416	30000
2	6.05D-04	5.91D-05	9.78	7.83D-04	0.030	1.81D-05		400	120000
					VESSEL	9.36D-05	7.92		

DEPTHS FOR INITIAL INITIATION (IN)

	0.09	0.26	0.46	0.67	0.90	1.16	1.44	1.74	2.08
NUMBER	0	582	267	113	37	9	4	0	0
PERCENT	0.0	57.5	26.4	11.2	3.7	0.9	0.4	0.0	0.0

TIMES OF FAILURE(MINUTES)

	0.0	10.0	20.0	30.0	40.0	50.0	60.0	70.0	80.0	90.0	100.0	110.0	120.0
PERCENT	0.0	0.0	0.0	0.2	1.3	4.8	16.5	21.6	19.9	13.2	12.2	10.4	

INITIATION T-RTNDT(DEG.F)

	-100.0	-75.0	-50.0	-25.0	0.0	25.0	50.0	75.0	100.0	125.0	150.0	175.0	200.0
NUMBER	0	1	49	397	470	409	337	71	0	0	0	0	
PERCENT	0.0	0.1	2.8	22.9	27.1	23.6	19.4	4.1	0.0	0.0	0.0	0.0	

ARREST T-RTNDT(DEG.F)

	-50.0	-25.0	0.0	25.0	50.0	75.0	100.0	125.0	150.0	175.0	200.0	225.0	250.0
NUMBER	0	3	32	21	3	1	41	420	397	0	0	0	
PERCENT	0.0	0.3	3.5	2.3	0.3	0.1	4.5	45.8	43.2	0.0	0.0	0.0	

ICRKTP = 2 IACCEL = 1 NDLRS = 0 NRTRS = 0 DATE: 11/17/84 TIME: 23.20.38

CPU TIME: 4 MIN 9 SEC

5.5.3. Calculation of Effect on $P(F|E)$ of Including Warm Prestressing in Analysis

During many of the postulated PTS transients, the stress intensity factor K_I for all crack depths first increases with time, reaches a maximum, and then decreases. For the shallow flaws that are generally responsible for the initial crack initiation event, once K_I begins to decrease it does so throughout the remainder of the transient. This time-dependent behavior of K_I may prevent failure of a vessel because a flaw cannot initiate while K_I is decreasing, even though $K_I/K_{Ic} \geqslant 1$. As mentioned earlier, this phenomenon is referred to as warm prestressing (WPS), and the time of incipient WPS is the time at which $\dot{K}_I$ becomes equal to zero.

For most of the HBR-2 postulated transients, WPS could be a factor because the calculations indicate that for these transients K_I does not become equal to K_{Ic} until after the time

Table 5.8. Summary sheet for HBR-HYPO Transient No. 9.22B

```
        IPTS H B ROB CLAD 9.22 7/23/84                    1. FLAWS/IN**3    DRTN(IS) =  211.2

        -------------UNADJUSTED--------------             ---ADJUSTED----
WELD    P(F/E)      95%CI     %ERR   P(INITIA)  N*V      P(F/E)     %ERR    NFAIL     NTRIALS

 1      1.20D-02   8.84D-04   7.36   1.22D-02  0.030   3.61D-04            663       10000
 2      4.20D-03   3.78D-04   9.00   4.30D-03  0.030   1.26D-04            463       20000

                                                VESSEL  4.87D-04   5.93


DEPTHS FOR INITIAL INITIATION (IN)
              0.09  0.26  0.46  0.67  0.90  1.16  1.44  1.74  2.08
   NUMBER        0   666   313   114    41    10     3     0     0
   PERCENT     0.0  58.1  27.3   9.9   3.6   0.9   0.3   0.0   0.0


TIMES OF FAILURE(MINUTES)
              0.0  10.0  20.0  30.0  40.0  50.0  60.0  70.0  80.0  90.0 100.0 110.0 120.0
  PERCENT       0.0   0.0   0.0   1.6  21.3  27.4  20.5  11.5  10.1   4.2   2.3   1.1


 INITIATION T-RTNDT(DEG.F)
           -100.0 -75.0 -50.0 -25.0   0.0  25.0  50.0  75.0 100.0 125.0 150.0 175.0 200.0
  NUMBER          0     2    49   409   509   186   163    96     3     0     0     0
  PERCENT       0.0   0.1   3.5  28.9  35.9  13.1  11.5   6.8   0.2   0.0   0.0   0.0


 ARREST T-RTNDT(DEG.F)
           -50.0 -25.0   0.0  25.0  50.0  75.0 100.0 125.0 150.0 175.0 200.0 225.0 250.0
  NUMBER          0     1     8     5     0     0     1    36   233     7     0     0
  PERCENT       0.0   0.3   2.7   1.7   0.0   0.0   0.3  12.4  80.1   2.4   0.0   0.0

ICRKTP = 2   IACCEL = 1   NDLRS = 0   NRTRS = 0   DATE: 11/17/84   TIME: 23.12.05

CPU TIME:  0 MIN 58 SEC
```

of incipient WPS. A typical case is illustrated in Figure 5.5. The reason for not including WPS in most of the calculations is that the K_I vs t curves for the shallow flaws are very flat, making it difficult to determine where the maximum is. Furthermore, unforeseen variations in pressure and coolant temperature might exist and defeat WPS. Even so, it is of interest to see what the effect is for the idealized transients, and the results of such a study are presented in Table 5.13.

For some transients, there can be more than one time during the transient at which $\dot{K}_I = 0$. For these transients, the time selected for incipient WPS was that corresponding to the maximum value of K_I.

Table 5.13 shows, for each of the transients considered, the time of incipient WPS, the calculated values of $P(F|E)$ without WPS included in the analysis, and the ratio of $P(F|E)$ with and without WPS included. It is apparent that for these idealized transients the benefit of WPS can be large but is dependent on the transient.

Table 5.9. Summary sheet for HBR-HYPO Transient No. 9.33

IPTS H B ROB CLAD 9.33 7/6/84 1. FLAWS/IN**3 DRTN(IS) = 211.2

WELD	UNADJUSTED P(F/E)	UNADJUSTED 95%CI	UNADJUSTED %ERR	P(INITIA)	N*V	ADJUSTED P(F/E)	ADJUSTED %ERR	NFAIL	NTRIALS
1	6.59D-06	6.50D-07	9.87	1.39D-05	0.030	1.98D-07		394	270000
2	1.73D-07	7.07D-08	40.87	6.02D-07	0.030	5.19D-09		23	600000
					VESSEL	2.03D-07	9.67		

DEPTHS FOR INITIAL INITIATION (IN)

	0.09	0.26	0.46	0.67	0.90	1.16	1.44	1.74	2.08
NUMBER	0	407	322	136	32	13	3	0	0
PERCENT	0.0	44.6	35.3	14.9	3.5	1.4	0.3	0.0	0.0

TIMES OF FAILURE(MINUTES)

	0.0	10.0	20.0	30.0	40.0	50.0	60.0	70.0	80.0	90.0	100.0	110.0	120.0
PERCENT	0.0	0.0	0.0	0.0	1.0	2.0	1.5	6.4	14.1	21.5	25.4	28.2	

INITIATION T-RTNDT(DEG.F)

	-100.0	-75.0	-50.0	-25.0	0.0	25.0	50.0	75.0	100.0	125.0	150.0	175.0	200.0
NUMBER	0	0	32	272	507	200	256	54	1	0	0	0	
PERCENT	0.0	0.0	2.4	20.6	38.4	15.1	19.4	4.1	0.1	0.0	0.0	0.0	

ARREST T-RTNDT(DEG.F)

	-50.0	-25.0	0.0	25.0	50.0	75.0	100.0	125.0	150.0	175.0	200.0	225.0	250.0
NUMBER	0	2	49	32	3	0	27	634	158	0	0	0	
PERCENT	0.0	0.2	5.4	3.5	0.3	0.0	3.0	70.1	17.5	0.0	0.0	0.0	

OF STD DEVS ABOVE MEAN DELTA RTNDT(FAILURES ONLY)

	1.00	1.25	1.50	1.75	2.00	2.25	2.50	2.75	3.00
NUMBER	5	12	31	50	57	81	101	80	
PERCENT	1.2	2.9	7.4	12.0	13.7	19.4	24.2	19.2	

OF STD DEVS ABOVE MEAN RTNDT(FAILURES ONLY)

	1.00	1.25	1.50	1.75	2.00	2.25	2.50	2.75	3.00
NUMBER	2	4	21	41	67	80	104	98	
PERCENT	0.5	1.0	5.0	9.8	16.1	19.2	24.9	23.5	

ICRKTP = 2 IACCEL = 1 NDLRS = 1 NRTRS = 1 DATE: 11/17/84 TIME: 23.25.24

CPU TIME: 22 MIN 42 SEC

Table 5.10. Summary sheet for HBR-HYPO Transient No. 9.41

```
        IPTS H B ROB CLAD 9.41 7/6/84                    1. FLAWS/IN**3    DRTN(IS) =  211.2

        -------------UNADJUSTED--------------            ---ADJUSTED----
WELD    P(F/E)       95%CI     %ERR   P(INITIA)  N*V      P(F/E)     %ERR    NFAIL    NTRIALS

 1      2.76D-05   2.72D-06   9.86   6.07D-05  0.030   8.27D-07            395      410000
 2      2.10D-06   6.20D-07  29.55   5.96D-06  0.030   6.30D-08             44      600000

                                              VESSEL   8.90D-07   9.40


DEPTHS FOR INITIAL INITIATION (IN)
              0.09  0.26  0.46  0.67  0.90  1.16  1.44  1.74  2.08
   NUMBER       0   492   296   130    53    19     4     0     0
   PERCENT    0.0  49.5  29.8  13.1   5.3   1.9   0.4   0.0   0.0


TIMES OF FAILURE(MINUTES)
              0.0  10.0  20.0  30.0  40.0  50.0  60.0  70.0  80.0  90.0 100.0 110.0 120.0
   PERCENT    0.0   0.0   0.0   0.0   0.0   2.4  14.1  17.7   5.5  14.5  19.1  26.8


 INITIATION T-RTNDT(DEG.F)
           -100.0 -75.0 -50.0 -25.0   0.0  25.0  50.0  75.0 100.0 125.0 150.0 175.0 200.0
   NUMBER       0     9   112   443   401   111   163    77     0     0     0     0     0
   PERCENT    0.0   0.7   8.5  33.7  30.5   8.4  12.4   5.9   0.0   0.0   0.0   0.0


 ARREST T-RTNDT(DEG.F)
           -50.0 -25.0   0.0  25.0  50.0  75.0 100.0 125.0 150.0 175.0 200.0 225.0 250.0
   NUMBER       0    35   104    31     0     1    98   436   172     0     0     0
   PERCENT    0.0   4.0  11.9   3.5   0.0   0.1  11.2  49.7  19.6   0.0   0.0   0.0


 # OF STD DEVS ABOVE MEAN RTNDT(FAILURES ONLY)
           1.00  1.25  1.50  1.75  2.00  2.25  2.50  2.75  3.00
   NUMBER     9    22    25    52    62   104    75    90
   PERCENT  2.1   5.0   5.7  11.8  14.1  23.7  17.1  20.5


 ICRKTP = 2   IACCEL = 1   NDLRS = 0   NRTRS = 1   DATE: 11/17/84   TIME: 23.23.51

 CPU TIME: 26 MIN 41 SEC
```

5.5.4. Calculation of Effect on $P(F|E)$ of Proposed Remedial Measures

The proposed remedial measures considered in the fracture-mechanics studies were (1) reduction in the fluence rate and (2) annealing of the pressure vessel.

5.5.4.1. Reduction in fluence rate

The reduction in fluence rate was assumed to have taken place on January 1, 1985, and it was assumed to be the same at all critical locations in the vessel wall. The effect was sim-

Table 5.11. Summary sheet for HBR-HYPO Transient No. 9.43

IPTS H B ROB CLAD 9.43 7/6/84 1. FLAWS/IN**3 DRTN(IS) = 211.2

WELD	UNADJUSTED P(F/E)	95%CI	%ERR	P(INITIA)	N*V	ADJUSTED P(F/E)	%ERR	NFAIL	NTRIALS
1	3.39D-04	3.35D-05	9.88	3.57D-04	0.030	1.02D-05		393	210000
2	4.17D-05	6.96D-06	16.68	4.38D-05	0.030	1.25D-06		138	600000
					VESSEL	1.14D-05	8.98		

DEPTHS FOR INITIAL INITIATION (IN)

	0.09	0.26	0.46	0.67	0.90	1.16	1.44	1.74	2.08
NUMBER	0	262	170	82	31	11	2	0	0
PERCENT	0.0	47.0	30.5	14.7	5.6	2.0	0.4	0.0	0.0

TIMES OF FAILURE(MINUTES)

	0.0	10.0	20.0	30.0	40.0	50.0	60.0	70.0	80.0	90.0	100.0	110.0	120.0
PERCENT	0.0	0.0	0.0	0.0	5.1	29.1	37.5	19.9	2.9	2.8	1.2	1.4	

INITIATION T-RTNDT(DEG.F)

	-100.0	-75.0	-50.0	-25.0	0.0	25.0	50.0	75.0	100.0	125.0	150.0	175.0	200.0
NUMBER	0	0	30	171	277	81	30	12	1	0	0	0	
PERCENT	0.0	0.0	5.0	28.4	46.0	13.5	5.0	2.0	0.2	0.0	0.0	0.0	

ARREST T-RTNDT(DEG.F)

	-50.0	-25.0	0.0	25.0	50.0	75.0	100.0	125.0	150.0	175.0	200.0	225.0	250.0
NUMBER	0	0	5	4	0	0	0	31	31	0	0	0	
PERCENT	0.0	0.0	7.0	5.6	0.0	0.0	0.0	43.7	43.7	0.0	0.0	0.0	

ICRKTP = 2 IACCEL = 1 NDLRS = 0 NRTRS = 0 DATE: 11/17/84 TIME: 23.14.52

CPU TIME: 21 MIN 44 SEC

ply to change the proportionality constant between F_0 and EFPY beyond January 1, 1985. At that time the vessel would have been in service for ~8.1 EFPY, and the fluence for the controlling region, weld 2-273A, would have been 1.2×10^{19} neutrons/cm^2. The fluence rate beyond 8 EFPY for weld 2-273A was assumed to be constant and equal to $0.0817 \times 10^{19}/f$, where f is a factor by which the fluence rate can be changed. Thus,

$$F_0 \times 10^{-19} = 1.2 + \frac{0.0817(t - 8.1)}{f} , \tag{5.23}$$

where

t = effective full-power years of operation (EFPY).

The effectiveness of reducing the fluence rate at 8.1 EFPY was evaluated at 32 EFPY for the six most dominant transients, using f = 2, 4, and 8. The results are presented in Table 5.14.

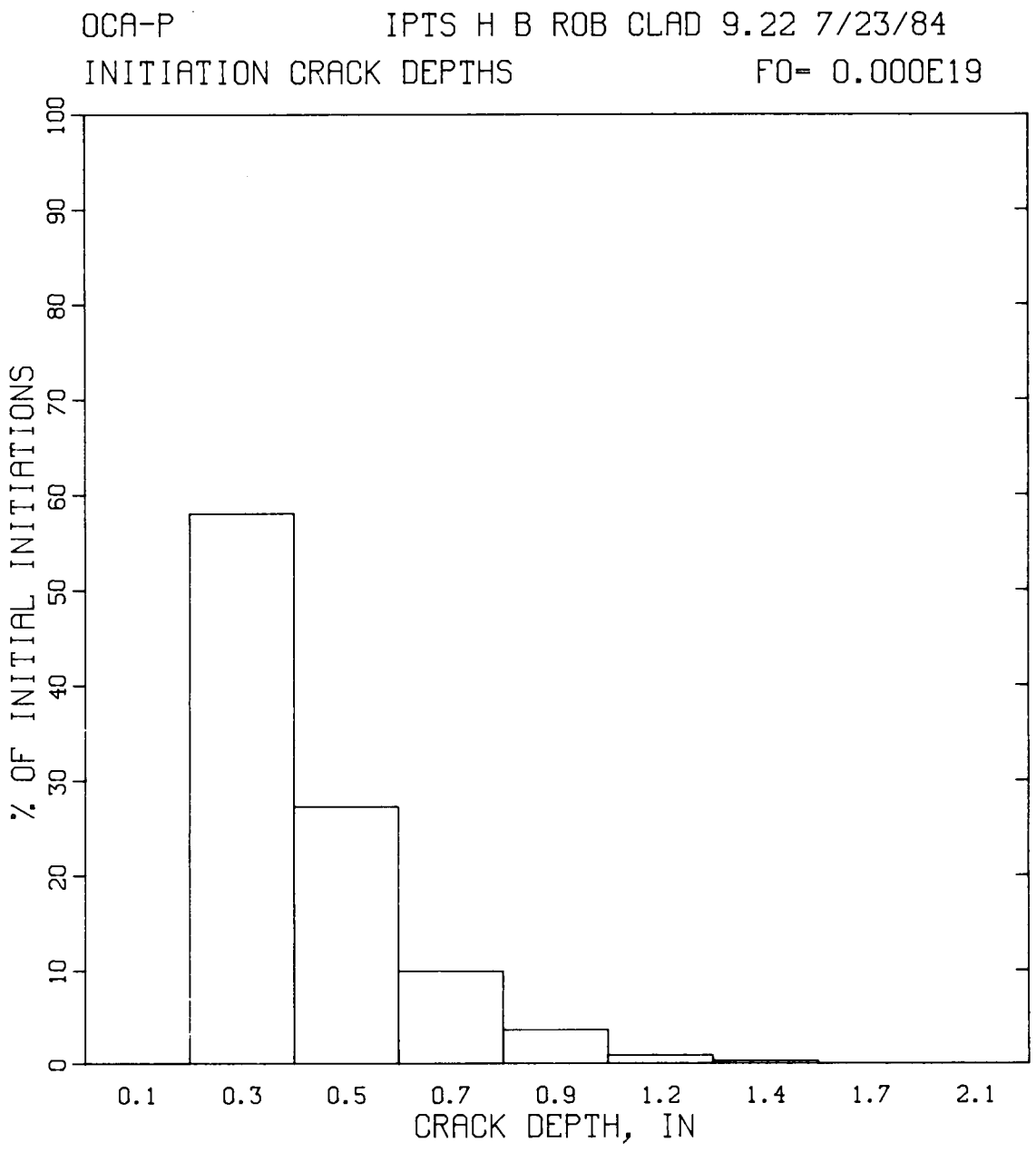

Figure 5.9. Histogram of percent of initial initiations vs crack depth (Transient 9.22B).

5.5.4.2. Annealing of the pressure vessel

Annealing of the pressure vessel will increase the fracture toughness of the vessel material, and the amount of the increase will depend on the annealing temperature and time, the chemistry of the material, and the number of times the vessel is annealed. Test results from small specimens indicate that essentially full recovery of the initial fracture toughness might be achieved by annealing in the temperature range 750-850°F for ~200 h.[19] Although preliminary studies indicate that such a process would probably be feasible in

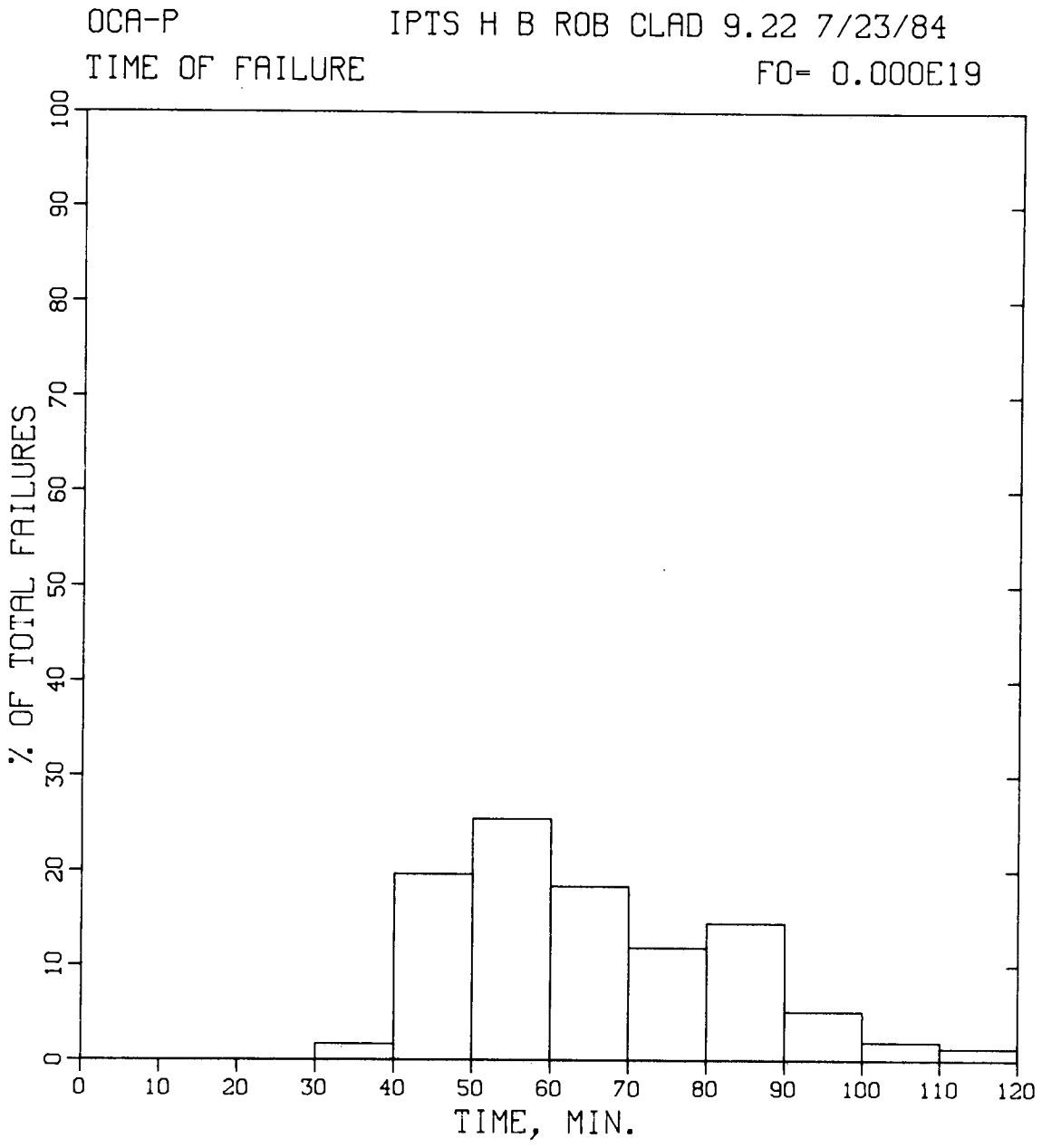

Figure 5.10. Histogram of percent of total failures vs time (Transient 9.22B).

some PWR plants, the feasibility of annealing the HBR-2 reactor vessel under these conditions has not been established. Nevertheless, for the purpose of this study it was assumed that the HBR-HYPO vessel would be annealed when the plant achieved ~9 EFPY (~January 1986), and that there would be complete recovery of fracture toughness. In effect, after annealing at 9 *y*, the fluence at 9 *y* would be zero. Thus, after 9 *y*,

$$F_0 \times 10^{-19}(\text{weld 2-273A}) = 0.0817(t - 9) \ , \tag{5.24}$$

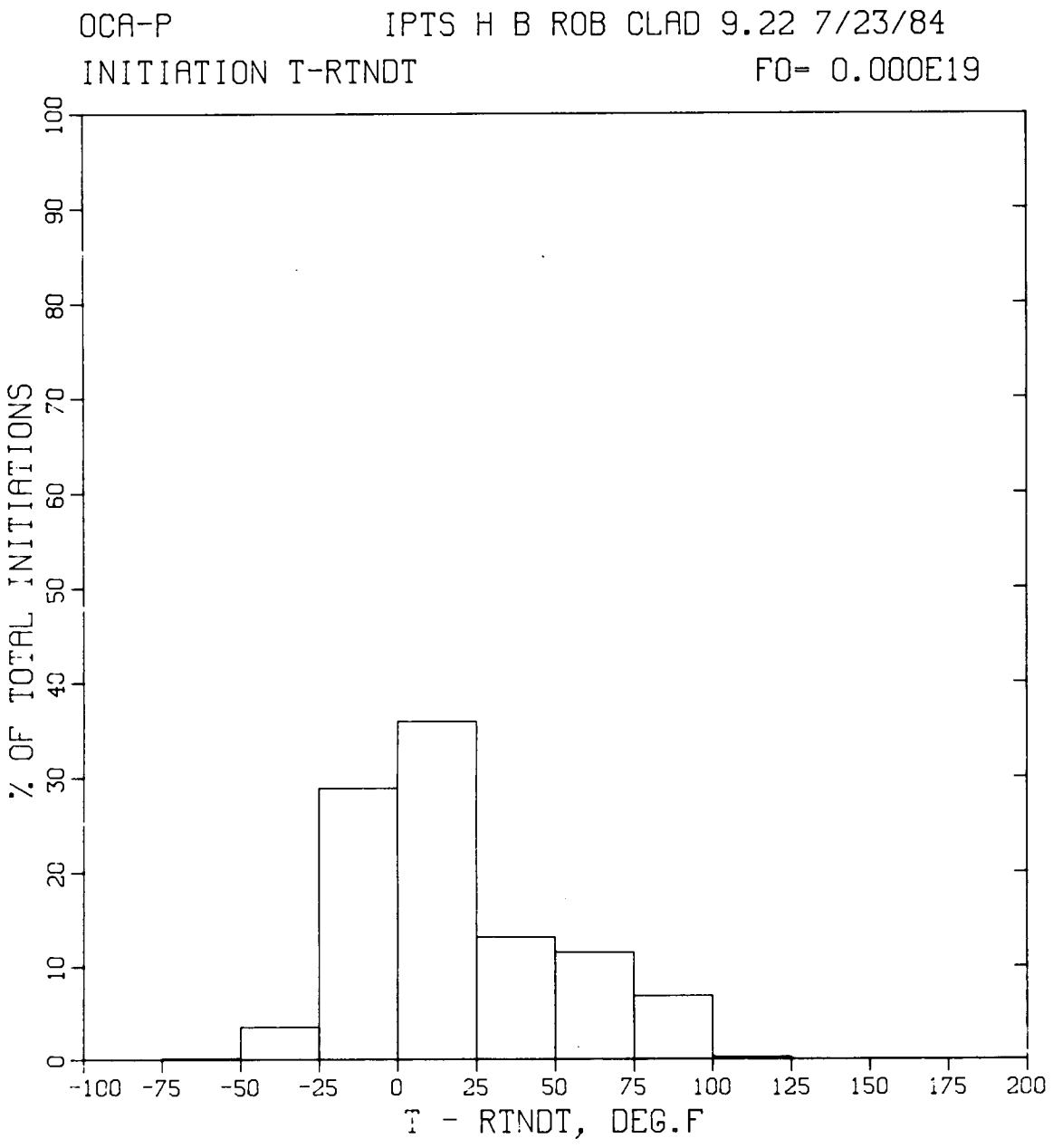

Figure 5.11. Histogram of percent of total initiation vs *T-RTNDT* (Transient 9.22B).

where

t = total time of service, EFPY.

This fluence (or the corresponding value of $\overline{RTNDT_s}$) can be used to obtain values of $P(F|E)$ after annealing. The benefit at 32 EFPY of this assumed annealing situation is indicated in Table 5.14.

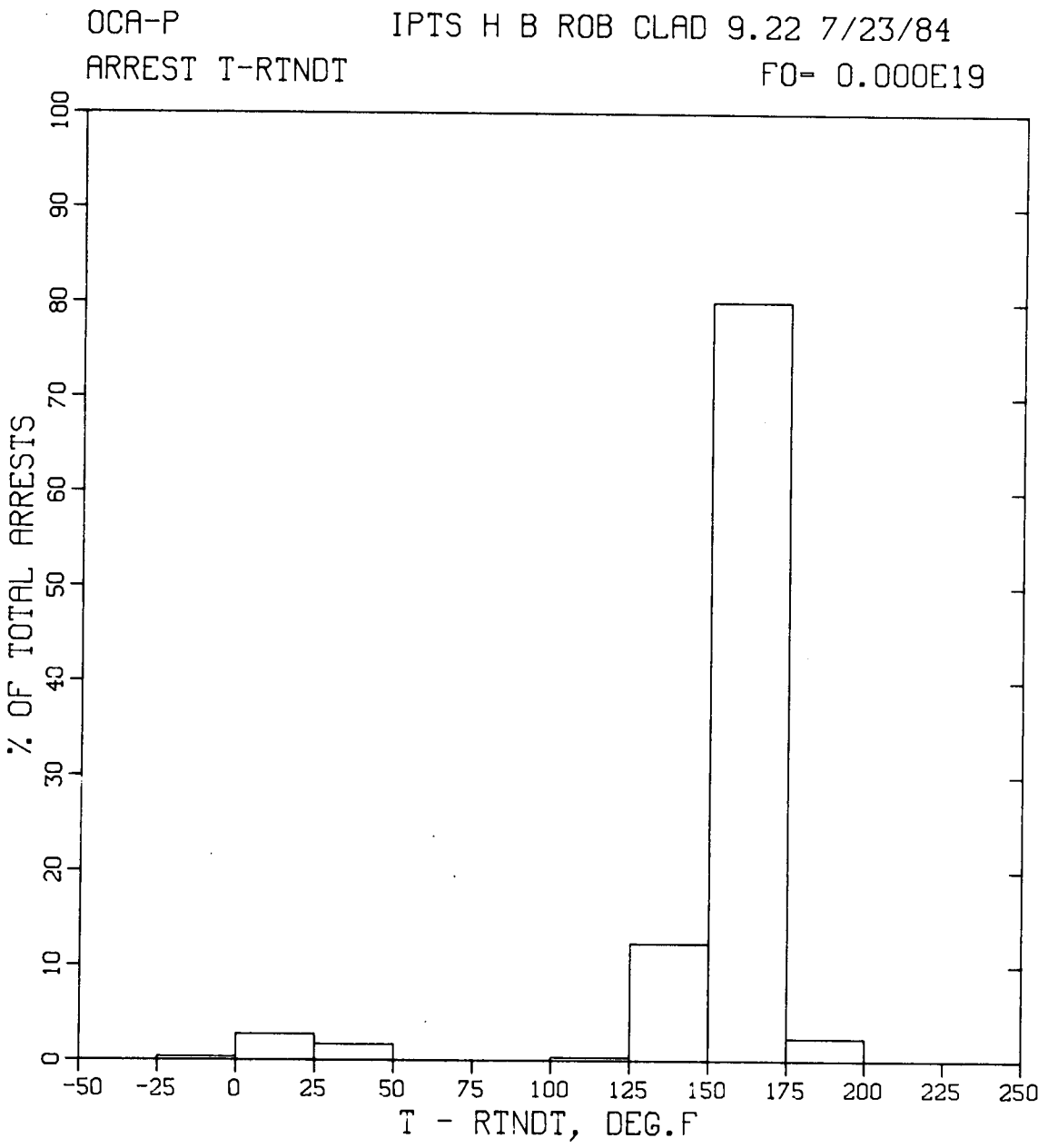

Figure 5.12. Histogram of percent of total arrests vs *T-RTNDT* (Transient 9.22B).

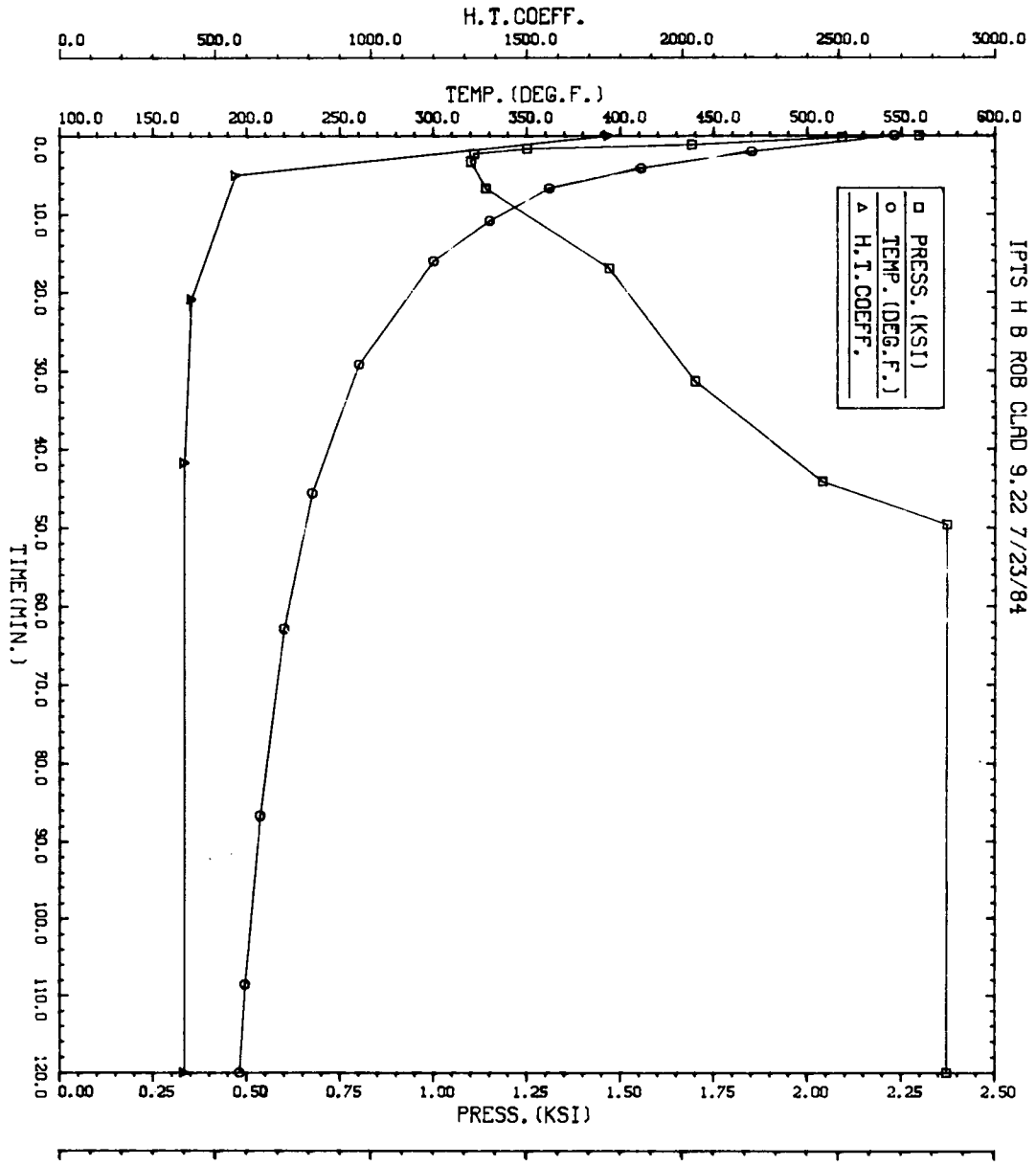

Figure 5.13. Downcomer coolant temperature, primary-system pressure, and fluid-film heat-transfer coefficient vs time (Transient 9.22B).

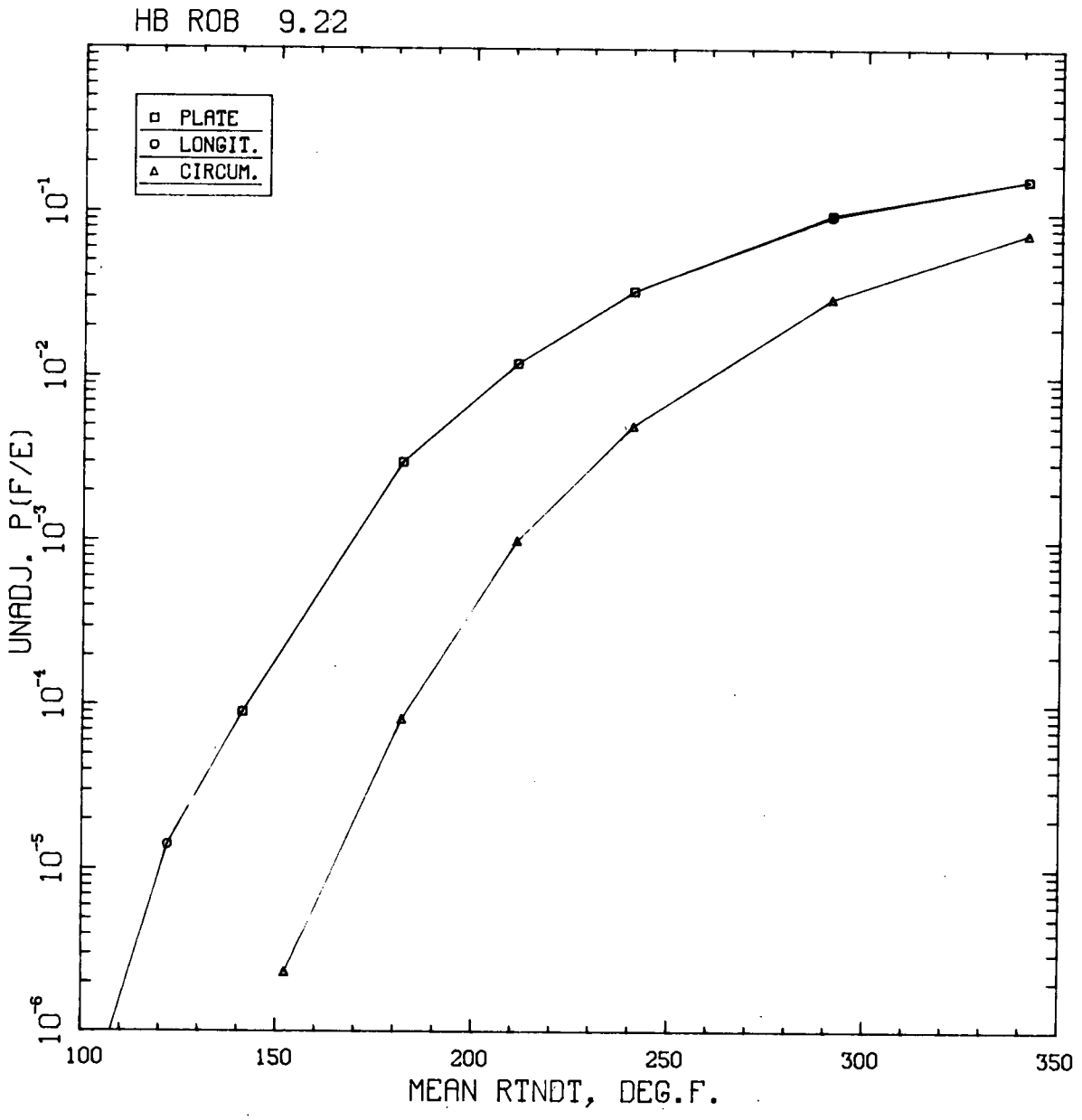

Figure 5.14. $\hat{P}_j \int_0^w f(a)B(a)da$ **vs** $RTNDT_s$ **(Transient 9.22B).**

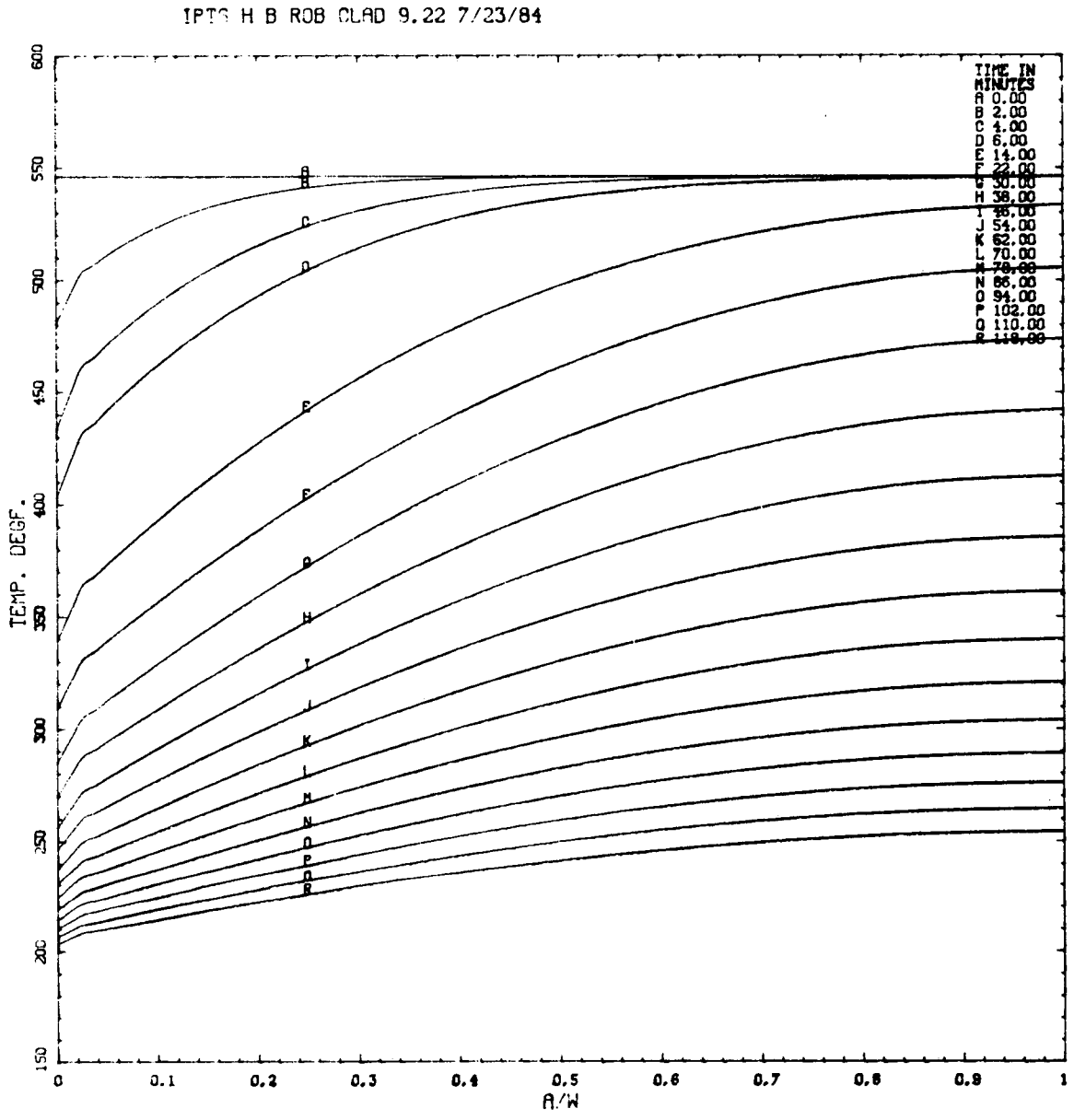

Figure 5.15. Wall temperature vs a/w for several times (Transient 9.22B).

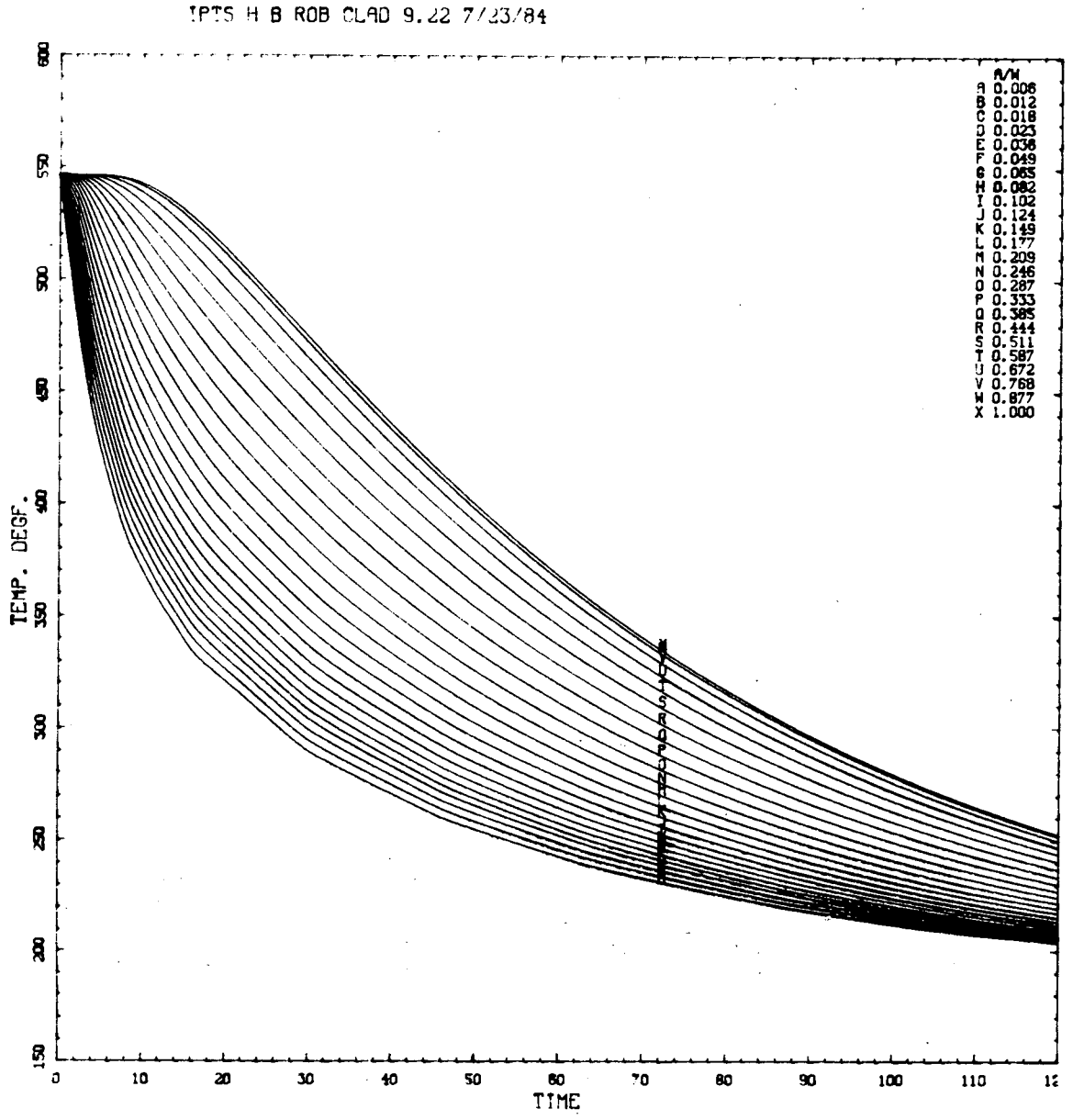

Figure 5.16. Wall temperature vs time for several values of a/w (Transient 9.22B).

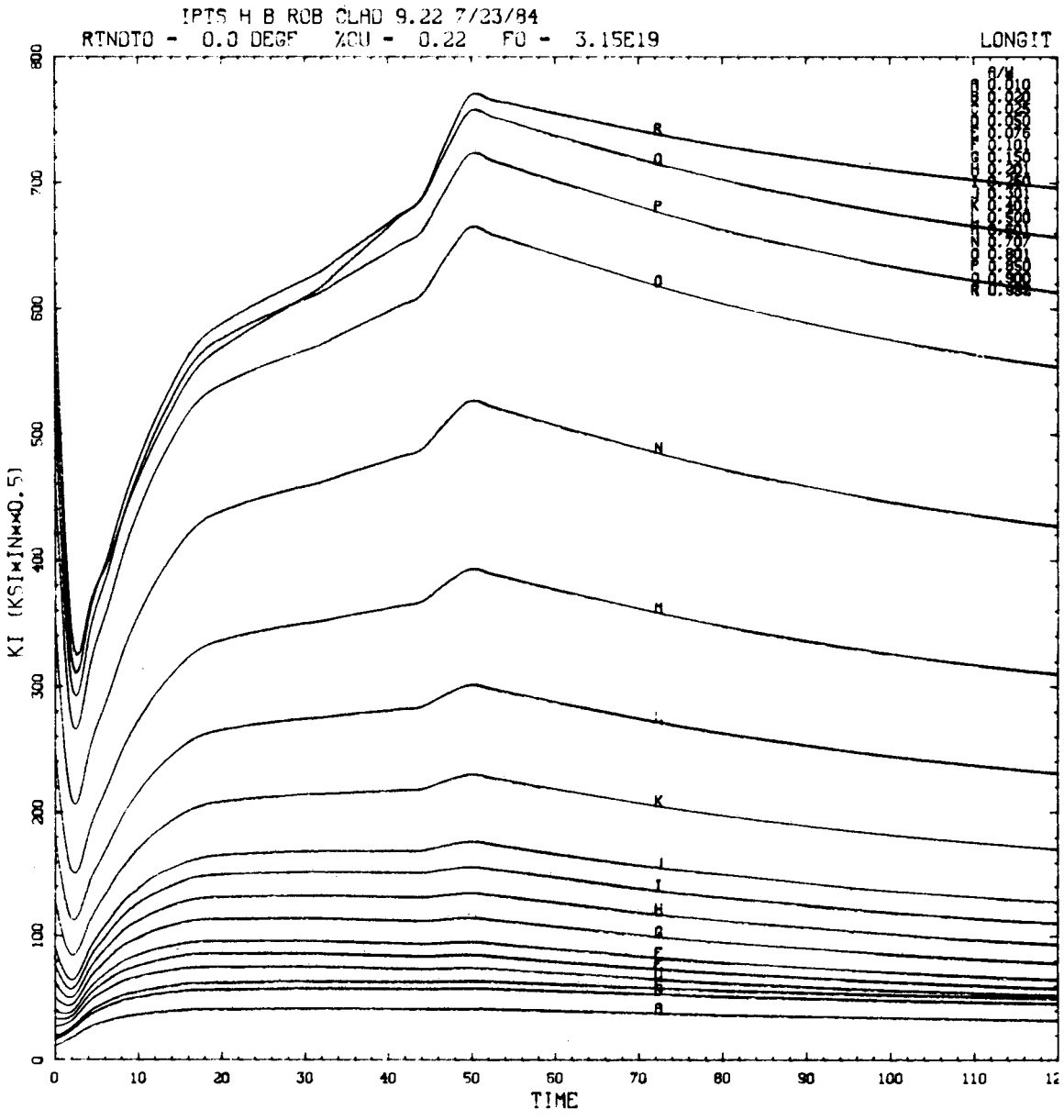

Figure 5.17. K_I **vs time for several values of** a/w **(Transient 9.22B).**

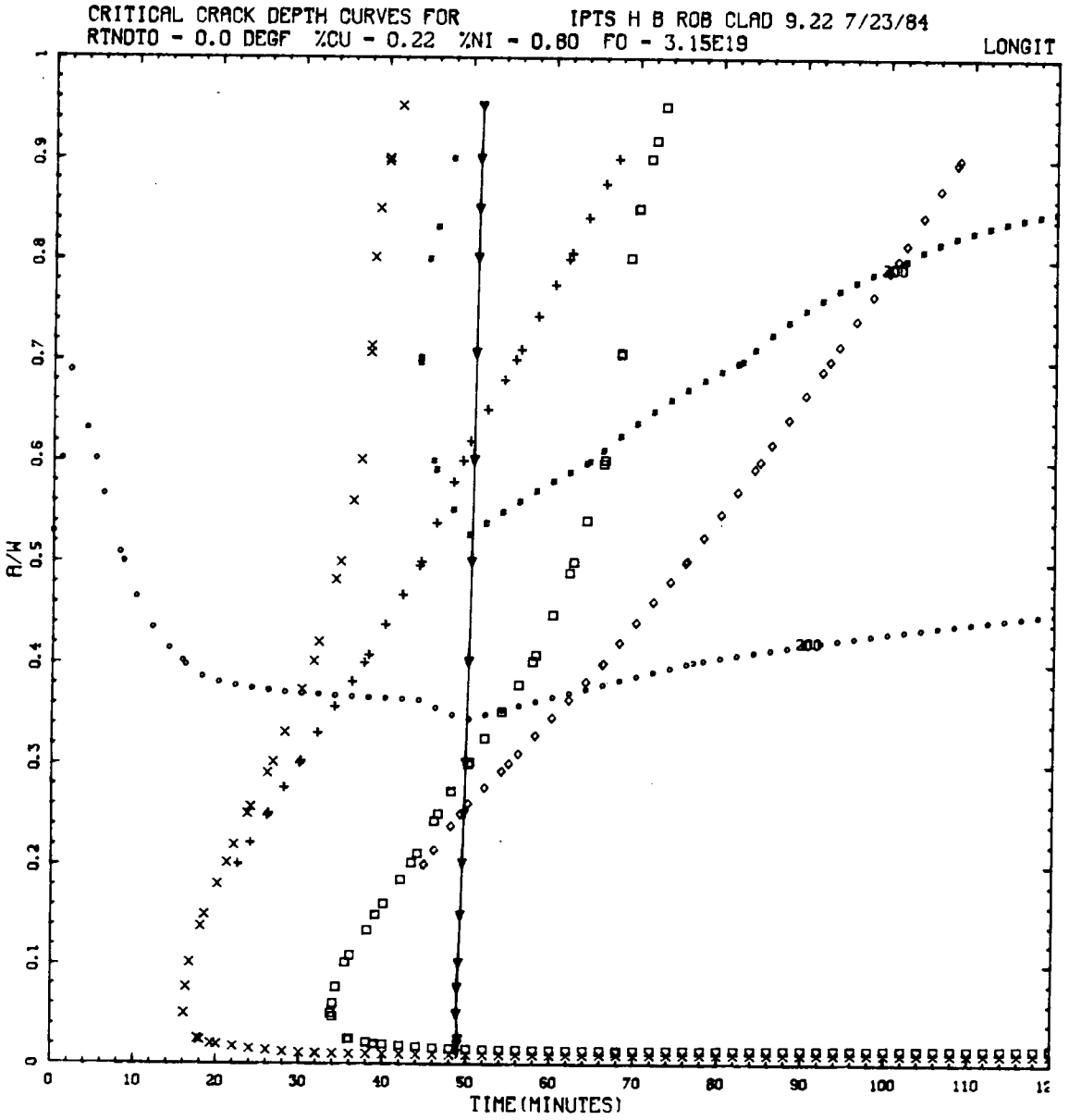

Figure 5.18. Critical-crack-depth curves for Transient 9.22B.

Table 5.12. Sensitivity of $P(F|E)$ for HBR-HYPO at 32 EFPY to changes in the mean values of several of the simulated parameters

Transient (Order of Dominance)	$P(F\|E)_0$[a]	$P(F\|E)_I$[b]/$P(F\|E)_0$ Simulated Parameter[c]							
		$\Delta RTNDT_s$ $(+\sigma)$	$RTNDT_s$ $(+\sigma)$	K_{Ic} $(-\sigma)$	K_{Ia} $(-\sigma)$	p (−50 psi)	T_c (−50°F)[d]	h (+25%)	N $(+\sigma)$
9.41	9E−7	13	12	6	1.1	1.2	27	1.2	100
9.33	2E−7	24	19	6	1.0	1.2	154	1.4	100
9.19B	9.5E−5	4	4	3	1.1	1.1	9	1.2	100
9.43	1.2E−5	7	6	4	1.0	1.0	15	1.1	100
9.20B	1.0E−4	4	4	3	1.1	1.1	9	1.2	100
9.22B	5.5E−4	3	3	3	1.0	1.1	5	1.1	100

[a]Value of $P(F|E)$ corresponding to original mean values of all parameters.

[b]Increased value of $P(F|E)$ due to change in each simulated parameter, one at a time.

[c]Parameter adjusted as indicated (+ or −) so as to achieve an *increase* in $P(F|E)$.

[d]See text for explanation.

Table 5.13. Effect of including warm prestressing (WPS) in calculation of $P(F|E)$ for HBR-HYPO at 32 EFPY

Transient	$P(F\|E)_0$[a]	Time of WPS (min)	$P(F\|E)_{w/WPS}$[a] / $P(F\|E)_0$
9.41	9E−7	26	$<2 \times 10^{-3}$
9.33	2E−7	48	0.01
9.19B	9.5E−5	26	$<3 \times 10^{-3}$
9.43	1.2E−5	54	0.2
9.20B	1.0E−4	26	$<3 \times 10^{-3}$
9.22B	5.5E−4	50	0.2

[a]$P(F|E)_0$ is the original mean value at 32 EFPY; $P(F|E)_{w/WPS}$ is the value of $P(F|E)$ with warm prestressing included in the analysis.

Table 5.14. Effect of remedial measures on $P(F|E)$ for HBR-HYPO at 32 EFPY

		$P(F\|E)_{w/RM}/P(F\|E)_0$[a]			
		Reduction in Fluence Rate on Jan. 1, 1985			
Transient	$P(F\|E)_0$[a]	$f = 2$	$f = 4$	$f = 8$	Annealing at 9 EFPY
9.19B	9.5E−5	3E−1	1E−1	5E−2	2E−1
9.20B	1.0E−4	3E−1	1E−1	5E−2	2E−1
9.22B	5.5E−4	4E−1	2E−1	1E−1	3E−1
9.33	2E−7	4E−2	2E−3	2E−4	9E−3
9.41	9E−7	8E−2	1E−2	3E−3	4E−2
9.43	1.2E−5	2E−1	5E−2	1E−2	9E−2

[a] $P(F|E)_0$ is the original mean value at 32 EFPY; $P(F|E)_{w/RM}$ is the value of $P(F|E)$ with the remedial measure (reduction in fluence or annealing) included in the analysis.

5.6. References

1. F. J. Loss, R. A. Gray, Jr., and J. R. Hawthorne, *Significance of Warm Prestress to Crack Initiation During Thermal Shock*, Report NRL/NUREG-8165, Naval Research Laboratory, NTIS, Sept. 29, 1977.
2. R. D. Cheverton and S. K. Iskander, "Thermal-Shock Investigations," in *Heavy-Section Steel Technology Program Quarterly Progress Report October-December 1980*, NUREG/CR-1941 (ORNL/NUREG/TM-437), pp. 37–54, Oak Ridge National Laboratory.
3. F. A. Simonen *et al.*, *Status of Vessel Failure Mode Analysis: Feasibility Study and Preliminary Evaluation*, PNL report in preparation.
4. R. D. Cheverton and D. G. Ball, *OCA-P, A Deterministic and Probabilistic Fracture-Mechanics Code for Application to Pressure Vessels*, NUREG/CR-3618 (ORNL-5991), Oak Ridge National Laboratory, May 1984.
5. R. D. Cheverton, D. G. Ball and S. E. Bolt, "Thermal-Shock Investigations," in *Heavy-Section Steel Technology Program Quarterly Progress Report April-June 1983*, NUREG/CR-3334, Vol. 2 (ORNL/TM-8787/V2), pp. 57–74, Oak Ridge National Laboratory.
6. T. U. Marston (Ed.), *Flaw Evaluation Procedures, ASME Section XI, Background and Application of ASME Section XI, Appendix A, Special Report*, EPRI NP-719-SR, American Society of Mechanical Engineers, Electric Power Research Institute, August 1978.

7. Letter from F. J. Loss (NRL) to R. H. Bryan (ORNL), March 31, 1981.

8. P. N. Randall, U.S. Nuclear Regulatory Commission, personal communication to R. D. Cheverton, Oak Ridge National Laboratory.

9. R. D. Cheverton and D. G. Ball, "Thermal-Shock Investigations," in *Heavy-Section Steel Technology Program Quarterly Progress Report October-December 1982*, NUREG/CR-2751, Vol. 4 (ORNL/TM-8369/V4), p. 68, Oak Ridge National Laboratory.

10. *ASME Boiler and Pressure Vessel Code*, Section III, Division I, Subsection NA, Appendix I, American Society of Mechanical Engineers, New York, 1974.

11. R. M. Gamble and J. Strosnider, Jr., *An Assessment of the Failure Rate for the Beltline Region of PWR Pressure Vessels During Normal Operation and Certain Transient Conditions*, NUREG-0778, June 1981.

12. W. Marshall, *An Assessment of the Integrity of PWR Pressure Vessels*, United Kingdom Atomic Energy Authority, Second Report, March 1982.

13. R. Y. Rubinstein, *Simulation and the Monte Carlo Method*, Israel Institute of Technology, John Wiley & Sons, New York, 1981, pp. 115–117.

14. P. G. Hoel, *Introduction to Mathematical Statistics*, 3rd Edition, 1962, John Wiley & Sons.

15. A. Hald, *Statistical Theory with Engineering Applications*, John Wiley & Sons, 1952.

16. J. H. Phillips (CP&L), letter to J. D. White (ORNL), Re: H. B. Robinson Unit 2 Reactor Vessel Neutron Fluence, Chemistry and Weld Locations, Nov. 9, 1983.

17. J. H. Phillips (CP&L), letter to R. D. Cheverton (ORNL), Re: HBR-2 Reactor Vessel Data, April 26, 1984.

18. A. B. Cutter (CP&L), letter to R. H. Denton (USNRC), Re: HBR-2 Reactor Vessel Data, June 29, 1984.

19. J. R. Hawthorne, Naval Research Laboratory, personal communication to R. D. Cheverton, Oak Ridge National Laboratory.

Chapter 6

INTEGRATED PTS RISK FOR H. B. ROBINSON UNIT 2 AND POTENTIAL MITIGATION MEASURES

J. W. Minarick

Science Applications International Corporation

D. L. Selby

Oak Ridge National Laboratory

6. INTEGRATED PTS RISK FOR H. B. ROBINSON UNIT 2 AND POTENTIAL MITIGATION MEASURES

6.1. Introduction

Preceding chapters have outlined the procedures employed to estimate the three fundamental parameters required to quantify the PTS risk associated with a transient at H. B. Robinson Unit 2. These parameters are (1) the frequencies associated with potential overcooling sequences that have been identified for the plant (see Chapter 3), (2) the thermal-hydraulic histories of the sequences (Chapter 4), and (3) the conditional failure probabilities for the sequences (Chapter 5). This chapter describes how these three parameters are used to obtain estimated through-the-wall crack frequencies for all the sequences. The summed frequencies then represent the integrated risk of a through-the-wall crack due to PTS.

This chapter also discusses the dominant risk sequences and the relative risks of different classes of transients with respect to PTS. Finally, it describes the effects of potential corrective actions on reducing the through-the-wall crack frequencies.

6.2. Risk Integration Procedure and Results

In Chapter 3 a total of 229 potential overcooling sequences were identified for H. B. Robinson Unit 2, and the frequency of occurrence for each was calculated. As described in Chapter 4, a review of the overcooling sequences showed that detailed thermal-hydraulic analyses for 13 selected sequences would yield representative results which, when combined with data obtained by more approximate methods, would provide estimated temperatures and pressures in the vessel downcomer region for all the sequences over a 2-hr period following the initiation of the transient (see Appendix F). In turn, a review of the thermal-hydraulics data showed that detailed fracture-mechanics analyses to obtain conditional failure probabilities were not needed for all the sequences. Thus, the fracture-mechanics calculations described in Chapter 5 were also performed for selected sequences. Conditional failure probabilities were then assigned to all the sequences from one of the following data sources:

(1) Direct analysis of sequence: If the minimum temperature of the sequence dropped below 300°F and the sequence did not fall into Category 2 below, a fracture-mechanics calculation was performed for that specific sequence.

(2) Assignment of value from a separate sequence: If several sequences were identified as having essentially the same thermal-hydraulic profiles, then a fracture-mechanics calculation was performed for only one sequence in the group and the same conditional failure probability was used for all other sequences in the group.

(3) Value obtained from a bounding calculation: If a sequence involved relatively minor cooling (that is, if the minimum temperature in the downcomer region was greater than 300°F), then the sequence was assigned a conditional failure probability from a "bounding" calculation, providing the use of that probability did not lead to a significant contribution to the total estimated plant risk by the sequence. (As discussed in Chapter 5, a bounding calculation assumed a step decrease in temperature and a full pressure. The bounding calculation result was considered to be an overestimate.)

Through-the-wall crack frequencies were obtained for the various sequences by multiplying the conditional failure probabilities by the sequence frequencies. The resulting through-the-wall crack frequencies, along with the corresponding conditional failure probabilities, are given in Table 6.1 for both the hypothetical vessel postulated in Chapter 5 (HBR-HYPO) and the actual H. B. Robinson Unit 2 vessel. As pointed out in Chapter 5, it was necessary to introduce a hypothetical vessel in the fracture-mechanics study for this plant because the probabilities of failure obtained for the actual vessel were too small to permit an appropriate demonstration of the methods of analysis.* In the HBR-HYPO vessel, values of the initial fracture toughness and of the concentrations of copper and nickel were adjusted upward to increase the probability of failure. Otherwise, the vessel was considered to be identical with the actual HBR-2 vessel. The through-the-wall crack frequencies given in Table 6.2 correspond to the expected frequencies after 32 effective full power years (EFPY) of operation, at which time the nil-ductility reference temperatures for the vessels are $RTNDT + 2\sigma = 270°F$ for HBR-HYPO and $RTNDT + 2\sigma = 134°F$ for HBR-2.

Column 3 in Table 6.1 identifies the source of the conditional failure probability used for the sequence in column 1. If the sequence numbers in the two columns are identical, then a fracture-mechanics calculation was performed for that specific sequence. If the sequence numbers differ, then the conditional failure probability calculated for the sequence listed in column 3 was used for the sequence in column 1. If a "B" is entered in column 3, then a conditional failure probability obtained from a bounding calculation was used for the sequence in column 1. Since the conditional failure probability from a bounding calculation was considered to be an overestimate, the conditional failure probabilities and through-the-wall crack frequencies for sequences utilizing bounding calculations are preceded by a "less than" sign.

The total risk of a through-the-wall crack at the H. B. Robinson Unit 2 plant due to a PTS event was obtained by summing the individual estimated risks (through-the-wall crack frequencies) associated with all the sequences and residual groups listed in Table 6.1. The resulting value was determined to be $\sim 1.3 \times 10^{-8}$ per reactor year (RY) for HBR-HYPO at $RTNDT + 2\sigma = 270°F$. An evaluation of the perceived dominant sequences for the actual HBR Unit 2 at 32 EFPY yielded a total risk value which was substantially lower than that for HBR-HYPO and thus was too low to be meaningful.

---

* For the HBR-2 vessel, conditional failure probabilities could be calculated for only the most severe transients; thus only a limited number of values are given in Table 6.1 for the actual vessel.

Table 6.1. Summary of risk integration for H. B. Robinson Unit 2

Sequence Number[a]	Estimated Sequence Frequency (yr^{-1})	Sequence Number Used for Conditional Failure Probability[a]	HBR-HYPO at 32 EFPY ($RTNDT + 2\sigma = 270°F$) Sequence Conditional Failure Probability	HBR-HYPO at 32 EFPY ($RTNDT + 2\sigma = 270°F$) Through-the-Wall Crack Frequency (yr^{-1})	HBR-HYPO at 32 EFPY ($RTNDT + 2\sigma = 270°F$) Rank Ordering of Risk Due to PTS	HBR at 32 EFPY ($RTNDT + 2\sigma = 134°F$) Sequence Conditional Failure Probability	HBR at 32 EFPY ($RTNDT + 2\sigma = 134°F$) Through-the-Wall Crack Frequency (yr^{-1})
			Small-break LOCA at full power				
1.1	7.5E-3	B[b]	<1.0E-10	<8E-13			
1.2	7.5E-5	B	<1.0E-10	<8E-15			
1.3	5.6E-5	B	<1.0E-10	<6E-15			
1.4	5.7E-7	B	<1.0E-10	<6E-17			
1.5	1.6E-5	1.8	1.0E-8	2E-13			
1.6	2.2E-6	1.8	1.0E-8	2E-14			
1.7	(Included in Sequence 1.8)						
1.8	1.4E-4	1.8	1.0E-8	1.5E-12			
1.9	1.4E-6	1.9	<1.0E-10	<2E-16			
1.10	1.4E-6	1.8	1.0E-8	1.5E-14			
1.11	1.0E-6	1.8	1.0E-8	1E-14			
1.12	1.3E-5	1.8	1.0E-8	1.5E-13			
1.13	(Included in Sequence 1.1)						
1.14	(Included in Sequence 1.2)						
1.15	(Included in Sequence 1.3)						
1.16	(Included in Sequence 1.5)						
1.17	(Included in Sequence 1.1)						
1.18	(Included in Sequence 1.1)						
1.19	5.0E-6	1.8	1.0E-8	5E-14			
1.20	1.2E-7	9.3	1.3E-7	2E-14			
1.21	1.3E-7	9.34	3.0E-7	4E-14			
1.22	3.0E-7	9.19A	1.0E-7	3E-14			
11.1	3.0E-4	B	<1.0E-10	<3E-14			
11.2	3.0E-6	B	<1.0E-10	<3E-16			
11.3	(Included in Sequence 11.1)						
11.4	(Included in Sequence 11.2)						
11.5	3.0E-6	B	<1.0E-10	<3E-16			
11.6	1.8E-7	B	<1.0E-10	<2E-17			
11.7	7.2E-7	7.11	5.6E-5	4E-11			
11.8	5.5E-6	7.11	5.6E-5	3E-10	7		
11.9	5.2E-7	7.11	5.6E-5	3E-11			
11.10[c]	9.4E-7	7.11	5.6E-5	5E-11			

Table 6.1 (Continued)

Sequence Number[a]	Estimated Sequence Frequency (yr^{-1})	Sequence Number Used for Conditional Failure Probability[a]	HBR-HYPO at 32 EFPY ($RTNDT + 2\sigma = 270°F$) Sequence Conditional Failure Probability	Through-the-Wall Crack Frequency (yr^{-1})	Rank Ordering of Risk Due to PTS	HBR at 32 EFPY ($RTNDT + 2\sigma = 134°F$) Sequence Conditional Failure Probability	Through-the-Wall Crack Frequency (yr^{-1})
			Medium-break LOCA at full power				
2.1	9.4E-4	2.1	<1.0E-9	<1E-12			
2.2	9.5E-6	2.1	<1.0E-9	<1E-14			
2.3	7.1E-6	2.1	<1.0E-9	<8E-15			
2.4	7.2E-8	2.1	<1.0E-9	<8E-17			
2.5	1.5E-6	1.8	1.0E-8	2E-14			
2.6	2.8E-7	1.8	1.0E-8	3E-15			
2.7	(Included in Sequence 2.8)						
2.8	3.9E-7	1.8	1.0E-8	4E-15			
2.9	1.7E-5	1.8	1.0E-8	2E-13			
2.10	1.7E-7	1.8	1.0E-8	2E-15			
2.11	1.6E-6	1.8	1.0E-8	2E-14			
2.12	4.7E-7	1.8	1.0E-8	5E-15			
2.13	6.2E-7	2.1	<1.0E-9	<7E-16			
2.14[c]	2.1E-7	1.8	1.0E-8	2E-15			
			Small-break LOCA at hot 0% power				
3.1	7.7E-4	3.1	<1.0E-10	<8E-14			
3.2	7.6E-6	1.8	1.0E-8	8E-14			
3.3[d]							
12.1	3.1E-7	9.10B	1.1E-6	3E-13			
12.2	3.1E-7	9.5	1.5E-6	5E-13			
12.3	2.5E-7	9.10B	1.1E-6	3E-13			
12.4	3.0E-5	9.10B	1.1E-6	3E-11			
12.5[c]	1.1E-7	9.11B	2.8E-5	3E-12			
			Medium-break LOCA at hot 0% power				
4.1	1.9E-5	4.1	<1.0E-9	<2E-14			
4.2	1.9E-7	4.1	<1.0E-9	<2E-16			
4.3[c]	6.5E-9	4.1	<1.0E-9	<7E-18			

Table 6.1 (Continued)

Sequence Number[a]	Estimated Sequence Frequency (yr^{-1})	Sequence Number Used for Conditional Failure Probability[a]	HBR-HYPO at 32 EFPY ($RTNDT + 2\sigma = 270°F$) Sequence Conditional Failure Probability	Through-the-Wall Crack Frequency (yr^{-1})	Rank Ordering of Risk Due to PTS	HBR at 32 EFPY ($RTNDT + 2\sigma = 134°F$) Sequence Conditional Failure Probability	Through-the-Wall Crack Frequency (yr^{-1})
			Small steam-line break at full power				
5.1	7.3E-3	B	<1.0E-10	<8E-13			
5.2	7.3E-5	B	<1.0E-7	<8E-12			
5.3	7.3E-5	9.26	2.0E-7	1.5E-11			
5.4	7.4E-7	9.28	3.9E-6	3E-12			
5.5[d]							
5.6[d]							
5.7	1.2E-5	9.26	2.0E-7	2E-12			
5.8	1.3E-7	9.28	3.9E-6	5E-13			
5.9	5.5E-5	B	<4.0E-9	<2E-13			
5.10	5.5E-7	B	<1.0E-7	<6E-14			
5.11	5.5E-7	9.26	2.0E-7	1E-13			
5.12[d]							
5.13	9.5E-8	9.26	2.0E-7	2E-14			
5.14	2.3E-5	5.15	5.0E-7	1E-11			
5.15	2.4E-7	5.15	5.0E-7	1E-13			
5.16	2.4E-7	5.15	5.0E-7	1E-13			
5.17	(Included in Sequence 5.14)						
5.18	1.8E-7	5.19	2.0E-7	4E-14			
5.19	4.4E-6	5.19	2.0E-7	9E-13			
5.20	(Included in Sequence 5.19)						
5.21	7.3E-3	9.6	<2.0E-9	<2E-11			
5.22	7.3E-5	9.4	8.0E-8	6E-12			
5.23	7.3E-5	9.3	1.3E-7	1E-11			
5.24	5.5E-5	9.6	<2.0E-9	<1E-13			
5.25	7.4E-7	9.5	1.5E-6	1E-12			
5.26	5.5E-7	9.5	1.5E-6	8E-13			
5.27	5.5E-7	9.4	8.0E-8	4E-14			
5.28	3.1E-6	9.19A	1.0E-7	3E-13			
5.29	3.1E-6	6.8	1.0E-9	3E-15			
5.30[c]	6.6E-7	9.14B	1.1E-5	7E-12			

Table 6.1 (Continued)

Sequence Number[a]	Estimated Sequence Frequency (yr^{-1})	Sequence Number Used for Conditional Failure Probability[a]	HBR-HYPO at 32 EFPY ($RTNDT + 2\sigma = 270°F$) Sequence Conditional Failure Probability	Through-the-Wall Crack Frequency (yr^{-1})	Rank Ordering of Risk Due to PTS	HBR at 32 EFPY ($RTNDT + 2\sigma = 134°F$) Sequence Conditional Failure Probability	Through-the-Wall Crack Frequency (yr^{-1})
			Large steam-line break at full power				
6.1	5.7E-4	6.8	1.0E-9	6E-13			
6.2	5.8E-6	B	<1.0E-8	<6E-14			
6.3	5.8E-6	B	<1.0E-8	<6E-14			
6.4	5.8E-8	B	<1.0E-8	<6E-16			
6.5[d]							
6.6	1.3E-8	6.6	3.7E-4	5E-12			
6.7	1.3E-6	6.9	1.0E-4	1.3E-10	14		
6.8	4.3E-6	6.8	1.0E-9	4E-15			
6.9	1.0E-8	6.9	1.0E-4	1E-12			
6.10	1.1E-6	9.20B	1.0E-4	1E-10	16	5E-7	5.5E-13
6.11	1.9E-7	9.20B	1.0E-4	2E-11		5E-7	9.5E-14
6.12	5.7E-4	6.8	1.0E-9	6E-13			
6.13	5.9E-6	6.8	1.0E-9	6E-15			
6.14	5.8E-6	6.8	1.0E-9	6E-15			
6.15	4.3E-6	6.8	1.0E-9	4E-15			
6.16[c]	4.4E-7	9.22B	5.5E-4	2E-10	10	4E-5	1.8E-11
			Small steam-line break at hot 0% power				
7.1	2.4E-3	B	<1.0E-10	<2E-13			
7.2	2.4E-5	B	<1.0E-10	<2E-15			
7.3	2.4E-5	B	<1.0E-10	<2E-15			
7.4[d]							
7.5	4.2E-8	7.5	4.2E-6	2E-13			
7.6	4.2E-6	7.6	1.0E-7	4E-13			
7.7	1.8E-5	B	<1.0E-10	<2E-15			
7.8	3.2E-8	7.8	6.0E-8	2E-15			
7.9[d]							
7.10[d]							
7.11[d]							
7.12	2.4E-3	9.6	<2.0E-9	<5E-12			
7.13	2.5E-5	9.3	1.3E-7	3E-12			
7.14	2.4E-5	9.4	8.0E-8	2E-12			

Table 6.1 (Continued)

Sequence Number[a]	Estimated Sequence Frequency (yr^{-1})	Sequence Number Used for Conditional Failure Probability[a]	HBR-HYPO at 32 EFPY ($RTNDT + 2\sigma = 270°F$) Sequence Conditional Failure Probability	Through-the-Wall Crack Frequency (yr^{-1})	Rank Ordering of Risk Due to PTS	HBR at 32 EFPY ($RTNDT + 2\sigma = 134°F$) Sequence Conditional Failure Probability	Through-the-Wall Crack Frequency (yr^{-1})
7.15	2.5E-7	9.5	1.5E-6	4E-13			
7.16	2.5E-7	B	<1.0E-10	<3E-17			
7.17	1.9E-7	9.5	1.5E-6	3E-13			
7.18	1.9E-7	B	<1.0E-10	<2E-17			
7.19	1.8E-7	B	<1.0E-10	<2E-17			
7.20[c]	2.5E-7	9.12B	3.6E-5	9E-12			
Large steam-line break at hot 0% power							
8.1	1.1E-5	8.2	1.4E-6	2E-11			
8.2	1.1E-7	8.2	1.4E-6	2E-13			
8.3	1.1E-7	8.3	2.0E-7	2E-14			
8.4	2.6E-8	8.6	6.6E-4	2E-11			
8.5	8.5E-8	8.5	4.0E-7	3E-14			
8.6	<8.5E-8	8.6	6.6E-4	<6E-11			
8.7	1.1E-5	6.8	1.0E-9	1E-14			
8.8	1.1E-7	6.8	1.0E-9	1E-16			
8.9	1.1E-7	6.8	1.0E-9	1E-16			
8.10[c]	2.3E-7	8.6	6.6E-4	2E-10	11		
Reactor trip at full power							
9.1	8.5	B	<1.0E-11	<9E-11			
9.2	1.3E-2	9.6	<2.0E-9	<3E-11			
9.3	1.3E-4	9.3	1.3E-7	2E-11			
9.4	1.4E-4	9.4	8.0E-8	1E-11			
9.5	1.3E-6	9.5	1.5E-6	2E-12			
9.6	1.0E-4	9.6	<2.0E-9	<2E-13			
9.7	1.0E-6	9.5	1.5E-6	1.5E-12			
9.8	1.0E-6	9.4	8.0E-8	8E-14			
9.9A	2.7E-3	9.9A	<4.0E-9	<1E-11			
9.9B	2.7E-5	9.9B	8.0E-7	2E-11			
9.10A	2.8E-5	9.10A	<2.0E-8	<6E-13			
9.10B	4.2E-6	9.10B	1.1E-6	5E-12			

Table 6.1 (Continued)

Sequence Number[a]	Estimated Sequence Frequency (yr^{-1})	Sequence Number Used for Conditional Failure Probability[a]	HBR-HYPO at 32 EFPY ($RTNDT + 2\sigma = 270°F$) Sequence Conditional Failure Probability	Through-the-Wall Crack Frequency (yr^{-1})	Rank Ordering of Risk Due to PTS	HBR at 32 EFPY ($RTNDT + 2\sigma = 134°F$) Sequence Conditional Failure Probability	Through-the-Wall Crack Frequency (yr^{-1})
9.11A	2.8E-5	9.11A	<1.0E-7	<3E-12			
9.11B	2.8E-7	9.11B	2.8E-5	8E-12			
9.12A	2.9E-7	9.12A	2.0E-7	6E-14			
9.12B	4.4E-8	9.12B	3.6E-5	2E-12			
9.13A	2.0E-5	9.9A	<4.0E-9	<8E-14			
9.13B	2.0E-7	9.9B	8.0E-7	2E-13			
9.14A	(Included in Sequence 9.19A)						
9.14B	(Included in Sequence 9.19B)						
9.15A	(Included in Sequence 9.20A)						
9.15B	(Included in Sequence 9.20B)						
9.16A	(Included in Sequence 9.21A)						
9.16B	(Included in Sequence 9.21B)						
9.17A	(Included in Sequence 9.22A)						
9.17B	(Included in Sequence 9.22B)						
9.18A	(Included in Sequence 9.23A)						
9.18B	(Included in Sequence 9.23B)						
9.19A	3.4E-3	9.19A	1.0E-7	3E-10	8		
9.19B	7.0E-6	9.19B	9.5E-5	7E-10	3	5E-7	4E-12
9.20A	3.5E-5	9.22A	<1.0E-6	<4E-11			
9.20B	3.5E-6	9.20B	1.0E-4	4E-10	6	5E-7	2E-12
9.21A	3.5E-5	9.22A	<1.0E-6	<4E-11			
9.21B	7.0E-8	9.22B	5.5E-4	4E-11		4E-5	3E-12
9.22A	3.5E-7	9.22A	<1.0E-6	<4E-13			
9.22B	3.5E-8	9.22B	5.5E-4	2E-11		4E-5	1E-12
9.23A	2.6E-5	9.23A	<1.0E-6	<3E-11			
9.23B	5.2E-8	9.23B	1.3E-4	7E-12			
9.24	2.4E-5	6.8	1.0E-9	2E-14			
9.25	1.5E-1	B	<1.0E-11	<2E-12			
9.26	1.5E-3	9.26	2.0E-7	3E-10	9		
9.27	1.5E-3	B	<1.0E-7	<2E-10	12		
9.28	1.5E-5	9.28	3.9E-6	6E-11			
9.29	1.1E-3	B	<1.0E-10	<1E-13			
9.30	1.2E-5	9.26	2.0E-7	2E-12			
9.31	1.2E-5	B	<1.0E-7	<1E-12			
9.32	1.2E-7	9.32	1.8E-6	2E-13			
9.33	1.4E-2	9.33	2.0E-7	3E-9	2	<1E-11	<1.4E-13

Table 6.1 (Continued)

Sequence Number[a]	Estimated Sequence Frequency (yr^{-1})	Sequence Number Used for Conditional Failure Probability[a]	HBR-HYPO at 32 EFPY ($RTNDT + 2\sigma = 270°F$) Sequence Conditional Failure Probability	Through-the-Wall Crack Frequency (yr^{-1})	Rank Ordering of Risk Due to PTS	HBR at 32 EFPY ($RTNDT + 2\sigma = 134°F$) Sequence Conditional Failure Probability	Through-the-Wall Crack Frequency (yr^{-1})
9.34	1.4E-4	9.34	3.0E-7	4E-11			
9.35	1.4E-4	9.40	1.0E-6	1E-10	17		
9.36	1.5E-6	9.43	1.2E-5	2E-11		<1E-9	<1.5E-15
9.37	1.1E-4	9.37	2.0E-7	2E-11			
9.38	1.1E-6	9.34	3.0E-7	3E-13			
9.39	1.1E-6	9.39	4.0E-7	4E-13			
9.40	1.1E-8	9.40	1.0E-6	1E-14			
9.41	4.1E-3	9.41	9.0E-7	4E-9	1	<1E-9	<4.1E-12
9.42	4.2E-5	9.42	1.2E-6	5E-11			
9.43	4.2E-5	9.43	1.2E-5	5E-10	5	<1E-9	<4.2E-14
9.44	4.2E-7	9.12B	3.6E-5	2E-11			
9.45	3.1E-5	9.45	5.0E-7	2E-11			
9.46	3.2E-7	9.43	1.2E-5	4E-12		<1E-9	<3.2E-16
9.47	3.1E-7	9.43	1.2E-5	4E-12			
9.48	4.3E-5	B	<1.0E-11	<5E-16			
9.49	4.9E-7	B	<1.0E-10	<5E-17			
9.50	4.9E-7	B	<1.0E-11	<5E-18			
9.51	4.4E-9	B	<1.0E-10	<5E-19			
9.52	3.7E-7	B	<1.0E-11	<4E-18			
9.53	3.3E-9	B	<1.0E-10	<4E-19			
9.54	3.3E-9	B	<1.0E-11	<4E-20			
9.55	3.3E-9	B	<1.0E-10	<4E-19			
9.56	4.6E-7	B	<1.0E-11	<5E-18			
9.57	8.1E-8	9.6	<2.0E-9	<2E-16			
9.58	8.1E-8	9.3	1.3E-7	1.0E-14			
9.59	8.1E-8	9.4	8.0E-8	6.5E-15			
9.60	8.1E-8	9.5	1.5E-6	1.2E-13			
9.61	8.1E-8	9.6	<2.0E-9	<1.6E-16			
9.62	1.5E-8	9.9B	8.0E-7	1.2E-14			
9.63	1.5E-8	9.10B	1.1E-6	1.7E-14			
9.64	1.5E-8	9.11B	2.8E-5	4.2E-13			
9.65	1.5E-8	9.10	1.1E-6	1.7E-14			
9.66	4.0E-6	B	<1.0E-11	<4.0E-17			
9.67	4.1E-8	B	<1.0E-10	<4.1E-18			
9.68	4.1E-8	B	<1.0E-11	<4.1E-19			
9.69	4.1E-8	B	<1.0E-10	<4.1E-18			

Table 6.1 (Continued)

Sequence Number[a]	Estimated Sequence Frequency (yr^{-1})	Sequence Number Used for Conditional Failure Probability[a]	HBR-HYPO at 32 EFPY ($RTNDT + 2\sigma = 270°F$) Sequence Conditional Failure Probability	Through-the-Wall Crack Frequency (yr^{-1})	Rank Ordering of Risk Due to PTS	HBR at 32 EFPY ($RTNDT + 2\sigma = 134°F$) Sequence Conditional Failure Probability	Through-the-Wall Crack Frequency (yr^{-1})
9.70	3.1E-8	B	<1.0E-11	<3.1E-19			
9.71	3.1E-8	B	<1.0E-10	<3.1E-18			
9.72	3.1E-8	B	<1.0E-11	<3.1E-19			
9.73	3.1E-8	B	<1.0E-10	<3.1E-18			
9.74	8.9E-8	B	<1.0E-11	<8.9E-19			
9.75	8.1E-8	9.6	<2.0E-9	<1.6E-16			
9.76	8.1E-8	9.3	1.3E-7	1.1E-14			
9.77	8.1E-8	9.4	8.0E-8	6.5E-15			
9.78	8.1E-8	9.6	<2.0E-9	<1.6E-16			
9.79	1.5E-8	9.9B	8.0E-7	1.2E-14			
9.80	1.5E-8	9.9B	8.0E-7	1.2E-14			
9.81	1.1E-6	B	<1.0E-11	<1.1E-17			
9.82	8.6E-9	B	<1.0E-10	<8.6E-19			
9.83	1.1E-8	B	<1.0E-11	<1.1E-19			
9.84	1.1E-8	B	<1.0E-10	<1.1E-18			
9.85	8.6E-9	B	<1.0E-11	<8.6E-20			
9.86	8.1E-8	9.6	<2.0E-9	<1.6E-16			
9.87	1.5E-8	9.9B	8.0E-7	1.2E-14			
9.88	1.9E-7	9.10B	1.1E-6	2.1E-13			
9.89	3.6E-5	9.12B	2.3E-7	8.3E-12			
9.90	1.0E-7	9.19A	2.6E-7	3E-14			
9.91	2.6E-7	9.22A	<1.0E-6	<3E-13			
9.92	3.0E-7	6.3	<1.0E-8	<3.0E-15			
9.93	2.3E-7	6.2	<1.0E-8	<2.3E-15			
9.94	7.2E-6	9.19B	9.5E-5	6.8E-10	4	5E-7	3.6E-12
9.95	1.9E-6	9.19B	9.5E-5	1.8E-10	13	5E-7	9.5E-13
9.96[c]	4.3E-8	7.11	5.6E-5	2.4E-12			
9.97[c]	2.2E-6	7.11	5.6E-5	1.2E-10	15		
9.98[c]	5.3E-8	9.20B	1.0E-4	5E-12			
9.99[c]	4.3E-7	5.4	3.9E-6	1.7E-12			

Table 6.1 (Continued)

Sequence Number[a]	Estimated Sequence Frequency (yr^{-1})	Sequence Number Used for Conditional Failure Probability[a]	HBR-HYPO at 32 EFPY ($RTNDT + 2\sigma = 270°F$) Sequence Conditional Failure Probability	Through-the-Wall Crack Frequency (yr^{-1})	Rank Ordering of Risk Due to PTS	HBR at 32 EFPY ($RTNDT + 2\sigma = 134°F$) Sequence Conditional Failure Probability	Through-the-Wall Crack Frequency (yr^{-1})
			Steam-generator tube rupture at hot 0% power				
10.1	5.0E-3	B	<1.0E-9	<5.0E-12			
10.2	8.0E-6	10.2	<1.0E-6	<1.0E-11			
10.3	3.03E-4	B	<1.0E-9	<3.0E-13			
10.4	5.0E-3	B	<1.0E-9	<5.0E-12			
10.5	5.0E-4	B	<1.0E-9	<5.0E-13			
			Loss of main feedwater				
13.1	3.0E-3	9.49	<1.0E-10	<3.0E-13			
13.2	3.0E-5	9.51	<1.0E-10	<3.0E-15			
13.3	2.1E-3	9.52	<1.0E-11	<2.1E-14			
13.4	2.1E-5	9.53	<1.0E-10	<2.1E-15			
13.5	2.1E-5	9.54	<1.0E-11	<2.1E-16			
13.6	2.1E-7	9.55	<1.0E-10	<2.1E-17			
			Support system failure				
14.1	8.1E-4	9.53	<1.0E-10	<8.1E-14			
14.2	1.8E-3	9.55	<1.0E-10	<2E-14			

[a]See Chapter 3 for definition of sequence numbers.

[b]B = bounding calculation used for the sequence. (Note, however, that the sequence numbers including a "B" are not bounding calculations; that is, Sequences 9.10B, 9.11B, etc. are not bounding calculations.)

[c]Residual Group.

[d]Sequence not considered applicable based on analysis subsequent to initial sequence definition; see Table 3.9.

Table 6.2. Through-the-wall crack frequencies for the six most dominant risk sequences for HBR-HYPO vessel and corresponding values for HBR-2 vessel

	Through-the-Wall Crack Frequency (yr^{-1})	
Sequence	HBR-HYPO Reactor Vessel at 32 EFPY	HBR-2 Reactor Vessel at 32 EFPY
9.41	4E-9	<5E-12
9.33	3E-9	<2E-13
9.19B	7E-10	4E-12
9.94	7E-10	4E-12
9.43	5E-10	<5E-14
9.20B	4E-10	2E-12

6.3. Dominant Risk Sequences

A review of the rank ordering of the individual sequence risks identifies six dominant sequences: 9.41, 9.33, 9.19B, 9.94, 9.43, and 9.20B. All these sequences are associated with stuck-open secondary side valves following a nonspecific reactor trip. Eleven other sequences contribute 1.0×10^{-10}/RY or greater to the integrated PTS risk. Of these, six are similarly associated with a nonspecific reactor trip and three with a large steam-line break at full power. One is associated with a large steam-line break at hot 0% power and one with a small-break LOCA (with a subsequent stuck-open STM PORV) at full power. The risk associated with the six major transients represents approximately 75% of the PTS risk at H. B. Robinson Unit 2 based on analyses using the hypothetical vessel. The risk contributions from the six dominant sequences are summarized in Table 6.2 for both the HBR-HYPO vessel and the HBR-2 vessel.

In the following paragraphs each sequence identified in Table 6.2 is discussed with respect to its frequency of occurrence, thermal-hydraulic characteristics, and conditional failure probability (for the HBR-HYPO vessel).

Sequence 9.41

Sequence 9.41 is a nonspecific reactor trip with the subsequent failure of all three STM PORVs to close. Plant response following the three stuck-open valves involves no further failures. This transient has an estimated frequency of 4.1×10^{-3}/RY. Following the reactor trip, the primary system pressure decreases rapidly to ~1200 psia, with a recovery to ~1450 psia in 15 min and to ~1600 psia at 2 hr. The temperature of the downcomer fluid decreases to ~270°F in just over an hour and remains at that temperature. The associated conditional failure probability for the hypothetical vessel for 32 EFPY was estimated to be 9×10^{-7}, which, in combination with the relatively high sequence frequency, results in this sequence having the highest estimated through-the-wall crack frequency (4×10^{-9}/RY).

Sequence 9.33

Sequence 9.33 is similar to sequence 9.41 except that it involves two stuck-open STM PORVs following a nonspecific reactor trip. As with sequence 9.41, no additional failures occur once the STM PORVs are open. This transient has a higher sequence frequency (1.4×10^{-2}/RY), a result of the difference in the estimated probabilities that two rather than three STM PORVs would remain open. In this sequence the primary system pressure also decreases rapidly (to ~1300 psig), with a ramp-like recovery to ~1800 psig at 2 hr, and the temperature of the downcomer region decreases to ~290°F at ~50 min and remains constant until the end of the 2-hr analysis period. The conditional failure probability calculated for the hypothetical vessel (2×10^{-7}) is a factor of 4.5 less than that calculated for sequence 9.41; however, combining this value with a sequence frequency that is a factor of 3.4 higher results in an estimated through-the-wall crack frequency of 3×10^{-9}/RY, which is only slightly lower than that for sequence 9.41. It should be noted that the equivalent sequence involving one stuck-open STM PORV (sequence 9.25) has a through-the-wall crack frequency ($<2 \times 10^{-12}$/RY) that is more than two orders of magnitude lower than that associated with sequences 9.41 and 9.33.

Sequence 9.19B

Sequence 9.19B involves the failure of three or more SDVs to close following a nonspecific reactor trip. In this transient, conditions for an automatic trip of the MSIVs are not met and, as a result, closure does not occur. While the possibility exists for the MSIVs to be manually tripped (and was assumed to occur at 30 min in sequence 9.19A and other "A" sequences), such operator action is not assumed for this sequence. The resulting sequence has an estimated frequency of 7×10^{-6}/RY. The transient involves a rapid depressurization of the primary system to ~1100 psia, followed by recovery to ~1600 psia at 2 hr, and a decrease in the temperature of the downcomer region to 200°F at 2 hr. The associated conditional failure probability for the hypothetical reactor vessel is 9.5×10^{-5}, and the through-the-wall crack frequency is 7×10^{-10}/RY, which is lower than that for sequence 9.41 by a factor of almost five.

Sequence 9.94

Sequence 9.94 also involves the failure of three SDVs to close following a reactor trip. In this case, however, the operator attempts to close the MSIVs at 30 min to terminate flow from the SGs. Two MSIVs fail to close, resulting in continued flow from two of the three SGs. The thermal-hydraulic responses for this sequence are expected to be similar to those for sequence 9.19B. The event sequence frequency also is approximately the same as that for sequence 9.19B, resulting in an equivalent risk impact (a through-the-wall crack frequency of 7×10^{-10}/RY).

Sequence 9.43

Like sequence 9.41, sequence 9.43 involves the failure of three STM PORVs to close following a reactor trip. However, in this case, the charging flow fails to automatically run back at the normal primary system pressure, resulting in a pressure transient. The pressure decreases to ~1250 psia in approximately 3 min and then increases in a somewhat linear fashion to the RCS relief valve set point in less than 1 hr. The temperature of the downcomer region falls in a decreasing exponential fashion to approximately 260 deg at 2 hr. The frequency for this sequence is estimated to be two orders of magnitude below that estimated for sequence 9.41, a result of the additional hardware failure. The conditional failure probability for the hypothetical vessel is estimated at 1.2×10^{-5}, a factor of two lower than that for sequences 9.19B and 9.94 described above. The resulting through-the-wall crack frequency for this sequence is 5×10^{-10}/RY, which is in the same range as those for sequences 9.19B and 9.94.

Sequence 9.20B

Sequence 9.20B is similar to sequence 9.19B in that three or more SDVs fail to close following a nonspecific reactor trip. As in sequence 9.19B, the operator fails to terminate the SG blowdown by manually closing the MSIVs and, in addition, fails to throttle AFW flow. The primary system pressure quickly decreases to ~1100 psia, recovering to ~1600 psia at 2 hr, and the downcomer temperature profile is similar to that estimated for sequence 9.19B. The event sequence frequency determined for this sequence is 3.5×10^{-6}/RY, a factor of two lower than that estimated for sequence 9.19B. When combined with a vessel conditional failure probability of 1×10^{-4}, this results in a through-the-wall crack frequency of 4×10^{-10}/RY.

6.4. Relative Importance of Each Category of Sequences (by Initiating Events)

In Chapter 4 the 229 potential overcooling sequences were divided into 12 categories according to their initiating events (see groupings in Table 6.1).

The risk associated with each of these 12 categories (for the hypothetical vessel HBR-HYPO) is summarized in Table 6.3, which includes an additional category (No. 13) for the residual groups. (That is, the residual groups listed in Table 6.1 under each category have all been grouped together.)

6.5. Effects of Potential Risk Reduction Measures

As described in Chapter 5, the effects of potential mitigating actions for reducing the PTS risk for H. B. Robinson Unit 2 were examined as a part of this study. These actions are reviewed here not as a list of recommendations but to give some information on the relative value of actions which could be taken provided a need to reduce the integrated

Table 6.3. PTS risk contribution by transient category for HBR-HYPO vessel

Category	Through-the-Wall Crack Frequency (yr^{-1})	Percent of Total
Small-break LOCA at full power	3.7E-10	3.0
Medium-break LOCA at full power	1.3E-12	1.0E-2
Small-break LOCA at hot 0% power	3.9E-11	0.31
Medium-break LOCA at hot 0% power	2.0E-14	1.6E-4
Small steam-line break at full power	7.9E-11	0.63
Large steam-line break at full power	2.6E-10	2.1
Small steam-line break at hot 0% power	1.2E-11	9.6E-2
Large steam-line break at hot 0% power	2.0E-11	0.16
Reactor trip at full power*	1.1E-8	88
Steam-generator tube rupture at hot 0% power	2.5E-11	0.20
Loss of main feedwater	3.2E-13	2.6E-3
Support system failure	1.7E-13	1.4E-3
Residual groups	6.8E-10	5.4
Total	$\sim 1.3 \times 10^{-8}$	100.0

*As noted in Section 6.2.2, dominant sequences in this category are all associated with secondary-side blowdown following a reactor trip.

risk of a through-the-wall crack due to PTS is identified. It should be noted, however, that the safety impact of the mitigating actions on other types of transients (that is, non-overcooling transients) has not been performed and the cost benefit of these actions has not been evaluated.

The following three risk reduction measures are discussed: (1) reduction of neutron fluence rate, (2) in-service inspection of the reactor vessel, and (3) annealing of the reactor vessel. Several other risk reduction measures that were examined in the PTS studies for Oconee Unit 1 or Calvert Cliffs Unit 1 were not specifically addressed for H. B. Robinson Unit 2. In three cases, the mitigating factors are inherent in the plant. These are (1) limiting RCS repressurization, which already exists owing to the low head HPI pumps and the charging flow runback on restoration of pressurizer level; (2) introduction of a high SG level feedwater pump trip system; and (3) heating of HPI water (already considered in the analysis).

A fourth measure not addressed was improvement in operator training. The utility training program was reviewed and found to be adequate with respect to PTS with one potential exception: plant response improvement to certain small steam-line breaks (such as SDV failures) through manual closure of the MSIVs. An auto-closure signal is not generated in such situations, and manual closure by the operator is required. It was not clear from the training program that the requirement to close these valves was emphasized to the operators.

One additional potential risk reduction measure, basing a RCP trip on a subcooling criterion instead of requiring a trip on HPI initiation due to low RCS pressure, would lead to the RCPs not being tripped during many secondary-side events. At the start of the H. B. Robinson Unit 2 PTS study, it was intended to perform analyses of dominant secondary-side sequences with the RCPs running to identify the impact of continued pump operation on PTS risk; however, owing to the low through-the-wall crack frequencies identified, plus programmatic constraints, these analyses were not performed.

6.5.1. Reduction of Neutron Fluence Rate

The benefits obtained from reducing the neutron fluence rate in the vessel wall by factors of 2, 4, and 8 were evaluated. Since fluence has a cumulative impact on the vessel *RTNDT* value, reducing the fluence rate will retard the effective rate of aging. This can have a significant effect on risk reduction. It was found that the fluence rate reduction factors of 2, 4, and 8 resulted in risk reduction factors of approximately 7, 20, and 33, respectively, at 32 EFPY for the hypothetical vessel.

6.5.2. In-Service Inspection of Vessel

In the analysis for Oconee Unit 1 (Ref. 1), it was assumed that in-service inspection would reveal 90% or 99% of the surface flaws with depths equal to or greater than 6 mm. It was further assumed that all flaws found would be repaired. If before the in-service inspection, no calculated failures were attributed to initial flaws with depths less than 6 mm, then the 90% and 99% inspection would reduce the conditional probability of failure, $P(F|E)$, by factors of 0.1 and 0.01, respectively. This assumption led to an overall reduction in the probability of vessel failure by about a factor 2 at 32 EFPY. The reduction factor was limited by the fact that the very shallow flaws which would not be detected or repaired actually make a significant contribution to the total probability of vessel failure.

Since the Oconee analysis was performed, many questions have been raised concerning the efficiency of flaw detection methodologies used and the practicality of repairing flaws. As a result, this explicit analysis was not performed for H. B. Robinson Unit 2. However, a review of the dominant sequences reveals a distribution of failures with respect to flaw depth which is similar to that observed for Oconee. Thus, under the same assumptions as used in the Oconee analysis, a factor of 2 reduction in vessel failure probability due to identification and repair of flaws would not appear to be unreasonable.

6.5.3. Annealing of the Reactor Vessel

Annealing of the reactor vessel will restore the fracture toughness of the vessel material, effectively cancelling the effects of neutron fluence. The extent of recovery will depend on the chemistry of the vessel material, the time-temperature characteristics of the annealing procedure, and the number of times the vessel is annealed. If it is assumed that full recovery of the vessel is achieved, a reduction of one to two orders of magnitude of the risk relative to that for the hypothetical vessel at 32 EFPY may be possible. The actual risk reduction factor is dependent upon the nature of the dominant sequences and the age of the vessel when annealing is performed. For this analysis, annealing was assumed to occur at 9 yr. This gave a risk reduction factor of 0.1. Annealing at a later time in life may produce a larger reduction in risk. It should be noted that the feasibility of in-place vessel annealing was not addressed in sufficient detail by this study to assure the effectiveness and practicality of this measure.

6.5.4. Summary of Effects of Potential Risk Reduction Measures

Fluence reduction and reactor vessel annealing have the potential for providing PTS risk reduction. The effects of these measures are summarized in Table 6.4.

Table 6.4. Impact of potential risk reduction measures on PTS risk

Risk Reduction Measure	Through-the-Wall Crack Frequency (yr^{-1})	Risk Reduction Factor
PTS base case analysis	1.3E-8	—
Fluence reduction by a factor of 2	2.0E-9	6.7
Fluence reduction by a factor of 4	7.0E-10	20
Fluence reduction by a factor of 8	4.5E-10	33
Reactor vessel annealing at 9 EFPY	1.3E-9	10

6.6. Reference

1. T. J. Burns *et al.*, *Preliminary Development of an Integrated Approach to the Evaluation of Pressurized Thermal Shock Risk as Applied to the Oconee Unit 1 Nuclear Power Plant*, NUREG/CR-3770 (ORNL/TM-9176), November 1985.

Chapter 7

SENSITIVITY AND UNCERTAINTY ANALYSES OF ESTIMATED THROUGH-THE-WALL CRACK FREQUENCIES FOR H. B. ROBINSON UNIT 2

D. Bozarth, C. L. Mason, and J. W. Minarick

Science Applications International Corporation

7. SENSITIVITY AND UNCERTAINTY ANALYSES OF ESTIMATED THROUGH-THE-WALL CRACK FREQUENCIES FOR H. B. ROBINSON UNIT 2

7.1. Introduction

The final step in the PTS evaluation for H. B. Robinson Unit 2 was to perform sensitivity and uncertainty analyses to determine (1) the impact of variations in individual calculational parameters on the estimated value of the through-the-wall crack (TWC) frequency reported in Chapter 6 and (2) the distribution of the estimated value based on the individual distributions associated with each of the calculational parameters.

The base case used for the sensitivity and uncertainty analyses assumed the hypothetical HBR-2 vessel (designated as HBR-HYPO) had an *RTNDT* value of 270°F, where *RTNDT* is the nil-ductility reference temperature. As discussed in Chapter 5, it was necessary to postulate the HBR-HYPO vessel, which has a higher initial fracture toughness and higher concentrations of copper and nickel than the actual HBR-2 vessel, because the conditional TWC probabilities estimated for the actual HBR-2 vessel were too low to adequately demonstrate the PTS analysis process.

The sensitivity analysis estimated the change in the TWC frequency for a given change of a single input parameter in the PTS-adverse direction. The results are given as a multiple of the nominal estimate of the TWC frequency at the 270°F *RTNDT* value (see Table 6.1). This analysis permits the individual parameters to be ranked according to their impacts on the TWC frequency estimate.

The uncertainty analysis developed percentile estimates of the TWC frequency estimates at the 270°F value based on the combined uncertainties in the input parameters utilized in the calculations. This analysis provides a measure of the overall variability in the TWC frequency estimate.

In the discussion below the distribution parameters for each variable used in the TWC frequency calculations, required for both the sensitivity analysis and the uncertainty analysis, are presented first. Descriptions of the uncertainty analysis and the sensitivity analysis are then given in Sections 7.3 and 7.4, respectively.

7.2. Distribution Parameters and Range Estimates for Individual Variables

The variables whose distribution parameters were required for the uncertainty and sensitivity analyses of the TWC frequency consisted of (1) the initiating-event frequencies and branch probabilities for event trees which contained dominant overcooling sequences, and (2) the variables utilized in the fracture-mechanics analysis (that is, temperature, flaw density, etc.).

7.2.1. Initiating-Event Frequencies and Branch Probabilities

The estimates of the distribution parameters for initiating-event frequencies and branch probabilities are presented in Tables 7.1 and 7.2, respectively. In developing these estimates, the mean value given in Chapter 3 for each initiating-event frequency and branch probability was preserved.

The distribution parameters given in Tables 7.1 and 7.2 were typically developed by assuming the variable could be described using a log-normal distribution, although in a few cases log-uniform distributions were utilized to describe distributions with high mean probabilities. All distributions associated with probabilities were truncated at 1.0. The implications of truncating the distribution are discussed in Appendix J.

Error factors assumed for the log-normal distributions of the branches reflected the amount of information available on component and/or operator failures and the combinations of failures required to cause the branch to be faulted. An error factor of 10 was assumed for branches dominated by individual component faults (such as a valve failing to close), for branches dominated by a single operator error in sequences associated with other operator successes, and for branches in which system-level failure data existed. An error factor of 15 was assumed for branches consisting of multiple component faults and for branches consisting of a single operator error in sequences associated with other operator errors.

7.2.2. Fracture-Mechanics Variables

As described in Chapter 5, the fracture-mechanics calculations which yielded conditional TWC probabilities [that is, values of $P(F|E)$] were performed with the OCA-P code.[1] Most of the variables used in the code and their standard deviations are presented in Table 5.1. In the uncertainty analysis, the standard deviation assumed for the variability in the mean values of these variables was one-third of that used in the OCA-P simulation. The one-third value was chosen to represent the uncertainty in the mean values of the parameters, since variability around a fixed mean is included in the OCA-P simulation.

In the OCA-P calculations, values used for the temperature and pressure were single mean values rather than distributions. For the uncertainty and sensitivity analyses, potential variations in the temperature and pressure were limited by physical processes, resulting in asymmetric distributions for these variables.

The remaining variable used in the fracture-mechanics calculation was the flaw density. The flaw density distribution used in the uncertainty and sensitivity analyses was designed to meet the constraints that the most prevalent number of flaws per cubic meter would be one and that, with respect to a normal distribution, 68% of the time the number of flaws per cubic meter would be less than 100. Since the spread between 1 and 100 is large and the number of flaws must be greater than zero, a log-normal distribution was chosen and the mean and median values were defined to meet the above heuristic constraints.

Table 7.1. Distribution parameters for initiating-event frequencies

Initiating Event	Initiating-Event Frequency				
	Mean Value (yr^{-1})	Median Value (yr^{-1})	Error Factor on Median	5% Value of Median (yr^{-1})	95% Value of Median (yr^{-1})
Small-break LOCA at full power	8.9E−3	3.3E−3	10	3.3E−4	3.3E−2
Multiplier for LOCA at hot 0% power	9.0E−2[a]	3.4E−2[a]	10	3.4E−3[a]	3.4E−1[a]
Small steam-line break at full power	2.0E−2	7.5E−3	10	7.5E−4	7.5E−2
Multiplier for small steam-line break at hot 0% power	0.25[a]	9.4E−2[a]	10	9.4E−3[a]	9.4E−1[a]
Large steam-line break at full power	1.2E−3	3.1E−4	15	2.1E−5	4.6E−3
Multiplier for large steam-line break at hot 0% power	0.019[a]	4.9E−3[a]	15	3.3E−4[a]	7.3E−2[a]
Reactor trip	8.5	3.2	10	3.2E−1	32.0
Loss of main feedwater	0.3	7.7E−2	15	5.1E−3	1.00[b]
Loss of service water	1.0E−2	3.8E−3	10	3.8E−4	3.8E−2

[a]Multiplier values are dimensionless.

[b]Truncated log-normal distribution end point.

These constraints are equivalent to setting the mode value (most probable value) equal to 1 and the 84th percentile ($+1\sigma$ point) equal to 100. For a log-normal distribution, these conditions give the equations

$$\text{Mode} = \exp(\eta - \xi^2) = 1$$

and

$$\text{84th percentile} = \exp(\eta + \xi) = 100,$$

which were solved for the parameters ξ and η ($\xi = 1.7035$ and $\eta = \xi^2 = 2.902$). Owing to physical constraints, the distribution is truncated at 500 flaws per cubic meter, which corresponds to the 94th percentile of the distribution. Without truncation, the mean and median of the distribution are 78 and 18 flaws per cubic meter, respectively. With truncation, both values are lowered, the mean to approximately 45 flaws per cubic meter. (This calculation is demonstrated in Appendix J.)

The cumulative (before truncation) probability distribution function is shown in Figure 7.1.

7.3. Uncertainty Analysis

A measure of the uncertainty in the estimated TWC frequency at *RTNDT* = 270°F was determined by using Monte Carlo analysis. Monte Carlo analysis constructs numerous

Table 7.2. Distribution parameters for event tree branch probabilities

Event Tree Heading	Branch	Branch Probability				
		Mean Value	Median Value	Error Factor on Median	5% Value of Median	95% Value of Median
Turbine trips on demand.	Turbine fails to trip.	4.0E−5	1.0E−5	15	6.7E−7	1.5E−4
STM PORVs close on demand.	One STM PORV fails to close.	1.8E−2	6.8E−3	10	6.8E−4	6.8E−2
	Two STM PORVs fail to close.	1.7E−3	4.4E−4	15	2.9E−5	6.6E−3
	Three STM PORVs fail to close.	4.9E−4	1.3E−4	15	8.7E−6	1.9E−3
SDVs close on demand.	One SDV fails to close.	1.6E−3	6.0E−4	10	6.0E−5	6.0E−3
	Two SDVs fail to close.	3.0E−4	7.7E−5	15	5.1E−6	1.2E−3
	Three or more SDVs fail to close.	4.2E−4	1.1E−4	15	7.0E−6	1.6E−3
SI signal generated on demand.	SI signal is not generated.	3.0E−5	7.7E−6	15	5.1E−7	1.1E−4
MFW runs back and isolates on demand (if SI signal is generated).	One line overfeeds.[a]	2.8E−7	1.0E−7	10	1.0E−8	1.0E−6
	Two lines overfeed.[a]	1.5E−9	3.9E−10	15	2.6E−11	5.8E−7
	All three lines overfeed.[a]	1.0E−10	2.6E−11	15	1.7E−12	3.9E−10
MFW runs back.	One line overfeeds.[b]	5.3E−6	2.0E−6	10	2.0E−7	2.0E−5
	Two lines overfeed.[b]	5.0E−7	1.3E−7	15	8.7E−9	1.9E−6
	All three lines overfeed.[b]	1.4E−7	3.5E−8	15	2.4E−9	5.4E−7
MFW isolates on demand (at hot 0% power only).	No line overfeeds.[a]	9.0E−6	3.4E−6	10	3.4E−7	3.4E−5
	Two lines overfeed.[a]	8.4E−7	2.2E−7	15	1.5E−8	3.3E−6
	All three lines overfeed.[a]	8.1E−8	2.1E−8	15	1.4E−9	3.1E−7
HPI occurs on demand (if SI signal is generated).	HPI fails to occur.	6.1E−4	2.3E−4	10	2.3E−5	2.3E−3
AFW actuates on demand.	AFW does not actuate.	1.0E−3	3.8E−4	10	3.8E−5	3.8E−3

Table 7.2. (Continued)

Event Tree Heading	Branch	Branch Probability				
		Mean Value	Median Value	Error Factor on Median	5% Value of Median	95% Value of Median
AFW flow automatically controlled.	Flow control failure leads to abnormally high AFW flow rate (overfeeds).	7.5E−3	1.9E−3	15	1.3E−4	2.8E−2
OA: Break not isolated.	Operator isolates break (small-break LOCA).	3.9E−2	1.5E−2	10	1.5E−3	1.5E−1
Charging flow runs back on demand.	Charging flow fails to run back (repressurization not limited).	1.0E−2	3.8E−3	10	3.8E−4	3.8E−2
OA: AFW isolated to low-pressure SG	AFW isolation fails to occur (small steam-line break)	1.7E−3	6.4E−4	10	6.4E−5	6.4E−3
	AFW isolation fails to occur (large steam-line break).	2.3E−3	8.6E−4	10	8.6E−5	8.6E−3
OA: AFW throttled to one (or two) SGs if OA has isolated AFW to other (one or two) SGs.	Operator fails to throttle AFW.	1.0E−2	3.8E−3	10	3.8E−4	3.8E−2
	Operator fails to throttle AFW given operator fails to close MSIVs.	5.0E−1	4.5E−1[c]	10	2.4E−1[c]	9.3E−1[c]
SGs blow down (if MSIV closure signal is generated).	No SGs blow down.	5.0E−1	4.5E−1[c]	10	2.4E−1[c]	9.3E−1[c]
	One SG blows down.	5.0E−1	4.5E−1[c]	10	2.4E−1[c]	9.3E−1[c]
	Two SGs blow down.	9.9E−4	2.6E−4[c]	15	1.7E−5	3.9E−3
	All three SGs blow down.	1.7E−4	4.4E−5	15	2.9E−6	6.6E−4
SGs blow down (if MSIV closure signal is not generated).	One SG blows down.	5.0E−1	4.5E−1[c]	10	2.4E−1[c]	9.3E−1[c]
	All three SGs blow down (until MSIVs closed by operator).	5.0E−1	4.5E−1[c]	10	2.4E−1[c]	9.3E−1[c]
SGs blow down (if three or more SDVs fail).	One SG blows down.	6.6E−3	2.5E−3	10	2.5E−4	2.5E−2
	Two SGs blow down.	2.0E−3	5.2E−4	15	3.5E−5	7.8E−3
	All three SGs blow down.	5.3E−4	1.4E−4	15	9.3E−6	2.1E−3

Table 7.2. (Continued)

Event Tree Heading	Branch	Branch Probability				
		Mean Value	Median Value	Error Factor on Median	5% Value of Median	95% Value of Median
PZR PORV reseats on demand.	PZR PORV fails to reseat (follows a failure of charging flow to run back).	1.2E−3	3.1E−4	15	2.1E−5	4.6E−3
OA: MSIVs closed.	Operator fails to close MSIVs (for steam-line break sizes ≃ two open SDVs).	1.0E−2	3.8E−3	10	3.8E−4	3.8E−2
	Operator fails to close MSIVs (for steam-line break sizes > two open SDVs).	2.0E−3	7.5E−4	10	7.5E−5	7.5E−3
Recovery of Service Water System	Service water not recovered.	1.0E−1	3.8E−2	10	3.8E−3	3.8E−1

[a]Includes failure of MFW regulating valves to run back, failure of one or both MFW pumps to trip on high level in any SG, and failure of MFIVs to close on SI signal.

[b]Includes failure of MFW regulating valves to run back and failure of MFW pumps to trip on high level in any SG.

[c]Small-break LOCA.

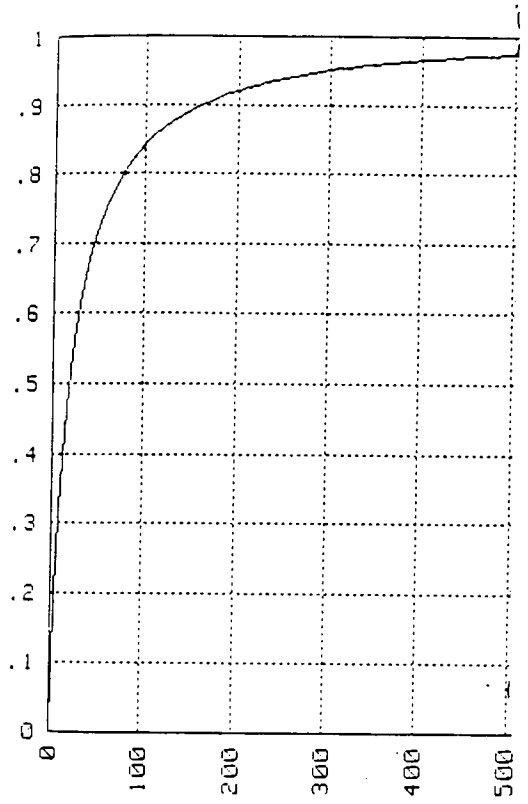

Figure 7.1. Cumulative distribution function for flaw density.

estimates of system performance at randomly sampled values of each input distribution and, based on the ensemble of system performance estimates, permits calculation of the distribution characteristics associated with the end result. The analysis process is shown in Figure 7.2.

There are several advantages to the use of a Monte Carlo simulation for the PTS uncertainty analysis. One is that the temperature error distributions are not symmetric, nor are they continuous over the interval $(-\infty, \infty)$. To realistically model such distributions via other error analysis methods, such as a Taylor series approximation, requires computation of higher order terms to measure skewness and kurtosis. Inclusion of these terms requires, in turn, evaluation of partial derivatives of higher orders which would be extremely difficult to accomplish for the conditional TWC probabilities.

A second advantage derives from the fact that the conditional TWC probabilities are quite nonlinear with respect to variations in OCA-P code input parameters, particularly to variations in the temperature and pressure time histories, and use of Monte Carlo analysis eliminates the need for incremental evaluation over the range of the input variables. Finally, a third advantage is that the results of the Monte Carlo analysis provide information as to the shape of the output distribution.

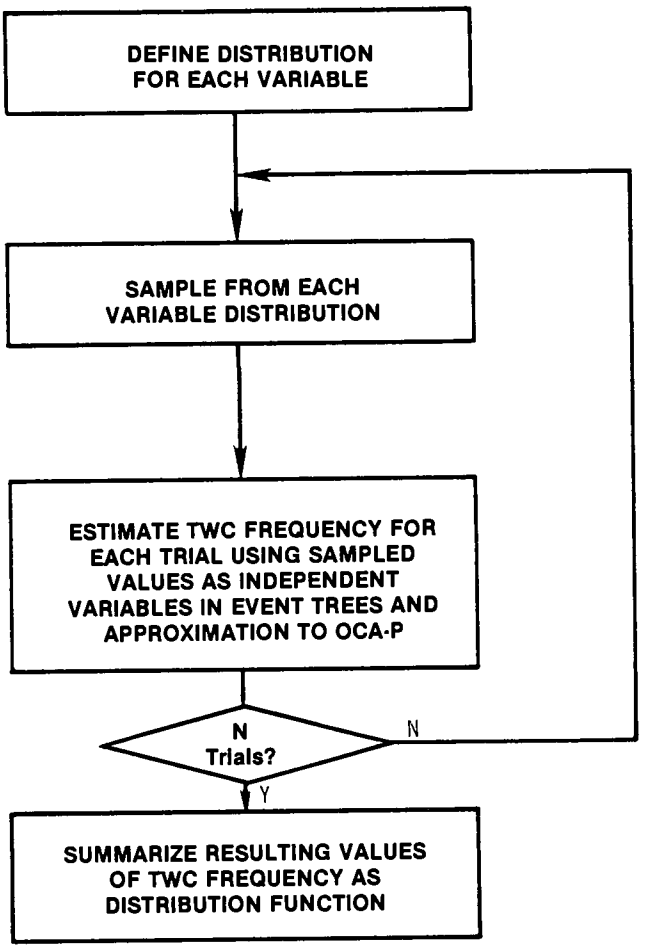

Figure 7.2. Monte Carlo uncertainty analysis process.

The uncertainty analysis was performed with the SAMPLE code[2] modified to include an improved random-number generator and a more efficient driver routine. The random-number generators GGUBFS and GGNQF from the IMSL library were used in this simulation for uniform and normally distributed random deviates, respectively.

The sequences included in the uncertainty analysis were the 55 frequencies that accounted for 99% of the total point estimate of the TWC frequency. (Previous work[3] had demonstrated that sequences which contribute a negligible amount to the point estimate are also negligible contributors to the error distribution.)

The 55 sequences are listed in Table 7.3 in the order of their decreasing contribution to the total TWC frequency. As described in Chapter 6, the TWC frequency for a given sequence (transient) is the product of the sequence frequency and the conditional TWC probability $[P(F|E)]$ for that sequence.

Table 7.3. Sequences included in uncertainty analysis simulation (ordered by decreasing contributions to total TWC frequency)

Case No.	Sequence Number	Sequence Used to Calculate $P(F\|E)$	RSM Model Used	Estimated Sequence Frequency (yr^{-1})	$P(F\|E)$, Conditional TWC Probability	TWC Frequency (yr^{-1})	Cumulative Percent of Total TWC Frequency
1	9.41	9.41	9.41	4.1E−03	8.9E−07	3.6E−09	24.9
2	9.33	9.33	9.33	1.4E−02	2.1E−07	2.9E−09	45.0
3	9.24	9.19B	9.19B	2.4E−05	9.6E−05	2.3E−09	60.8
4	9.94	9.19B	9.19B	7.2E−06	9.6E−05	6.9E−10	65.5
5	9.19B	9.19B	9.19B	6.8E−06	9.6E−05	6.5E−10	70.0
6	9.43	9.43	9.19B	4.2E−05	1.2E−05	5.0E−10	73.4
7	9.20B	9.20B	9.19B	3.5E−06	1.0E−04	3.5E−10	75.8
8	9.19A	9.19A	9.33	3.4E−03	1.0E−07	3.4E−10	78.2
9	9.26	9.26	9.33	1.5E−03	1.9E−07	2.8E−10	80.1
10	6.16	9.22B	9.19B	4.4E−07	5.7E−04	2.5E−10	81.8
11	9.02	9.06	9.33	1.3E−02	1.7E−08	2.2E−10	83.3
12	9.95	9.19B	9.19B	1.9E−06	9.6E−05	1.8E−10	84.6
13	8.10	8.06B	9.19B	2.3E−07	6.6E−04	1.5E−10	85.6
14	9.27	BC	9.33	1.5E−03	1.0E−07	1.5E−10	86.7
15	9.91	9.22B	9.19B	2.6E−07	5.7E−04	1.5E−10	87.7
16	9.35	9.40	9.41	1.4E−04	1.0E−06	1.4E−10	88.6
17	6.07	6.09	9.19B	1.3E−06	1.0E−04	1.3E−10	89.5
18	9.97	7.11B	9.19B	2.3E−06	5.6E−05	1.3E−10	90.4
19	5.21	9.06	9.33	7.3E−03	1.7E−08	1.2E−10	91.2
20	6.10	9.20B	9.19B	1.1E−06	1.0E−04	1.1E−10	92.0
21	7.12B	7.09	9.41	2.4E−05	3.6E−06	8.6E−11	92.6
22	9.01	BC	9.33	8.5E+00	1.0E−11	8.5E−11	93.2
23	5.30	9.14B	9.19B	6.6E−07	9.6E−05	6.3E−11	93.6
24	9.28	9.28	9.41	1.5E−05	4.0E−06	6.0E−11	94.0
25	8.06	8.06	9.19B	8.5E−08	6.6E−04	5.1E−11	94.4
26	11.10	7.11	9.19B	9.4E−07	5.6E−05	5.3E−11	94.8
27	9.42	9.42	9.41	4.2E−05	1.2E−06	5.0E−11	95.1
28	11.07	7.11	9.19B	7.2E−07	5.6E−05	4.0E−11	95.4
29	9.21B	9.22B	9.19B	7.0E−08	5.7E−04	4.0E−11	95.7
30	9.21A	9.22A	9.41	3.5E−05	1.0E−06	3.5E−11	95.9
31	9.34	9.34	9.33	1.4E−04	2.5E−07	3.5E−11	96.1
32	12.04	9.10B	9.41	3.0E−05	1.1E−06	3.3E−11	96.4
33	13.01	BC	9.33	3.0E−03	1.0E−08	3.0E−11	96.6
34	11.09	7.11	9.19B	5.0E−07	5.6E−05	2.9E−11	96.8
35	9.90	9.20B	9.19B	2.6E−07	1.0E−04	2.6E−11	96.9
36	9.23A	9.23A	9.41	2.6E−05	1.0E−06	2.6E−11	97.1
37	9.09B	9.09B	9.41	2.7E−05	8.4E−07	2.3E−11	97.3
38	9.22B	9.22B	9.19B	3.5E−08	5.7E−04	2.0E−11	97.4
39	9.36	9.43	9.19B	1.5E−06	1.3E−05	2.0E−11	97.5
40	6.11	9.20B	9.19B	1.9E−07	1.0E−04	1.9E−11	97.7
41	8.04	8.06	9.19B	2.6E−08	6.6E−04	1.7E−11	97.8
42	9.03	9.03	9.33	1.3E−04	1.3E−07	1.7E−11	97.9
43	9.37	9.37	9.33	1.1E−04	1.5E−07	1.6E−11	98.0
44	3.01	1.08	9.33	7.7E−04	2.0E−08	1.5E−11	98.1
45	9.44	9.12B	9.19B	4.2E−07	3.6E−05	1.5E−11	98.2
46	9.45	9.45	9.41	3.1E−05	4.7E−07	1.5E−11	98.3
47	8.01	8.02	9.41	1.1E−05	1.3E−06	1.4E−11	98.4
48	5.03	9.26	9.33	7.3E−05	1.9E−07	1.4E−11	98.5
49	7.13B	7.09	9.41	3.8E−06	3.6E−06	1.3E−11	98.6
50	5.14	5.15	9.41	2.3E−05	5.3E−07	1.2E−11	98.7
51	9.09A	9.09A	9.33	2.7E−03	4.0E−09	1.1E−11	98.8
52	9.04	9.04	9.33	1.4E−04	7.1E−08	9.9E−12	98.8
53	5.23	9.03	9.33	7.3E−05	1.3E−07	9.5E−12	98.9
54	7.20	9.12B	9.19B	2.5E−07	3.6E−05	9.0E−12	99.0
55	14.02	BC	9.33	9.0E−04	1.0E−08	9.0E−12	99.0
	Total					1.5E−08	

7.3.1. Fracture-Mechanics Model for Uncertainty Analysis

Owing to the complexity of the OCA-P fracture-mechanics model, it was not possible to incorporate the actual code into the Monte Carlo simulation. Therefore, in the uncertainty analysis the code was replaced with one of three response surface models (RSMs) which were developed for the three dominant sequences (9.41, 9.33, and 9.19B). These three sequences alone accounted for approximately 70% of the total TWC frequency, and the probability of failure in these three transients spanned nearly the entire range of failure probabilities that were explicitly calculated with OCA-P. Thus, these three RSMs were used for all sequences modeled in the uncertainty analysis by choosing the RSM closest in nominal conditional TWC probability to the sequence to be modeled and normalizing the results by the ratio of the nominal conditional TWC probability estimates. The assignment of RSMs to the modeled sequences is shown in Table 7.3, along with the assignment of sequences whose thermal-hydraulic characteristics had been adopted in the OCA-P calculation of $P(F|E)$.

The RSMs were generated by utilizing a central composite design for the four important fracture-mechanics variables: downcomer temperature, $RTNDT_0$ on the inner vessel surface (zero-fluence value of the nil-ductility reference temperature), $\Delta RTNDT$ (the increase in $RTNDT$ due to radiation damage), and K_{Ic} (the crack-initiation fracture-toughness value). These variables were ascertained to be the most significant from sensitivity calculations described in Chapter 5. Since the relative importances of the pressure, K_{Ia} (the crack-arrest fracture-toughness value) and the downcomer heat transfer coefficient were markedly less, these latter parameters were not included in the uncertainty analysis for sake of economy in the estimation of the RSM. To include the additional parameters in the RSM would have significantly increased the number of calculations required to develop the RSMs, and the small additional change that would have been realized in the estimated error distribution did not justify the increased computational costs.

The design matrix for the RSM is given in Table 7.4. In this table, standard notation is used where ± 1 signifies that the variable is at $\pm 1\sigma$ from the nominal (0) value, while ± 2 signifies that the variable is at $\pm 2\sigma$ from the nominal value. The particular design chosen is known as a rotatable central composite design (CCD). This term is used to signify that the variance in the predicted response is independent of the direction moved from the origin. The complete CCD consists of the first 25 design points shown in the table. The three extra points were run as part of the sensitivity analysis in Chapter 5, and since they were available, they were included in the estimation of the coefficients. (The effect of not including the three extra points and using them only as points for testing the adequacy of the model was also tried. The fitted results were almost unchanged, so the extra values were left in.)

Data points were generated with the OCA-P code for each of the 25 design points for the three dominant sequences. For sequence 9.33, design points 2 and 8 were not estimable, and for sequence 9.41, design point 8 was not estimable. These design points were so mild from a PTS standpoint that a failure probability could not be calculated without excessive computer costs. For this reason, these design points were treated as missing values.

Table 7.4. Design matrix used for response surface models for HBR-HYPO

Design Point	Permutation[a] X_1, Temperature	X_2, $RTNDT_0$	X_3, $\Delta RTNDT$	X_4, K_{Ic}
1	−1	−1	−1	−1
2	1	−1	−1	−1
3	−1	1	−1	−1
4	−1	−1	1	−1
5	−1	−1	−1	1
6	1	1	−1	−1
7	1	−1	1	−1
8	1	−1	−1	1
9	−1	1	1	−1
10	−1	1	−1	1
11	−1	−1	1	1
12	1	1	1	−1
13	1	1	−1	1
14	1	−1	1	1
15	−1	1	1	1
16	1	1	1	1
17	−2	0	0	0
18	2	0	0	0
19	0	−2	0	0
20	0	2	0	0
21	0	0	−2	0
22	0	0	2	0
23	0	0	0	−2
24	0	0	0	2
25[b]	0	0	0	0
26[c]	0	1	0	0
27[c]	0	0	1	0
28[c]	0	0	0	−1

[a] ± 1 or ± 2 signifies that variable is at $\pm 1\sigma$ or $\pm 2\sigma$ from nominal (0) value.

[b] Base case.

[c] First 25 points comprise central composite design; extra points (26, 27, and 28) included from sensitivity analysis in Chapter 5.

Including design points 26 through 28 and treating some design points as missing values did prevent the actual design matrix from being truly rotatable, but this was not a significant drawback for use of the resulting surface as an interpolating polynominal.

The purpose of a full factorial CCD design was to allow the estimation of the coefficients of a quadratic polynominal with all the quadratic and cross products included. Since the object in this analysis was to produce as good a RSM as possible with no extra experimentation, it was decided to run the full factorial since no information on parameter interactions was available to decide which interaction terms could be sacrificed. Further information on response surface models can be found in Reference 4.

The data in Table 7.5 were generated by the OCA-P model for only the single most dominant weld. (Data on the contribution of other lesser important welds to the total conditional TWC probability were available from the detailed analysis performed on each transient described in Chapter 5.) These data were utilized to develop a simple correlation of the dominant weld fractional contribution to the total conditional TWC probability. This correlation, also given in Table 7.5, along with associated data, was utilized to estimate the total conditional TWC probability for the sequence before fitting the RSM. Thus the result of the RSM was the total conditional TWC probability. The weighting factor and the resulting total conditional TWC probability are given in Table 7.6A.

The results of the fitting algorithm are given in Tables 7.6B, 7.6C, and 7.6D. It should be noted that weighted regression was used for sequences 9.33 and 9.41 to provide a more accurate fit at the high probability cases; thus some accuracy was sacrificed at lower probability. The weighting factor used was $y^{0.1}$, where y is the response variable, that is, the conditional TWC probability for the dominant weld. This weighting factor is subjective and was chosen by varying the exponent in several steps between 0 and 1. The value of 0.1 was selected as an appropriate compromise in accuracy across the entire range of the response variable. Sequence 9.19B was fit without weighting since the range of conditional TWC probabilities for that sequence was not as great. While the overall fitting accuracy for sequences 9.33 and 9.41 is not exceptional, it is certainly adequate for the purpose and is actually quite good considering the nonlinearity of the response and the tremendous range covered by the response variable.

Since the range of conditional TWC probabilities covers several orders of magnitude, a logarithmic transformation of the response variable is natural. Consequently, the response surface is given as follows:

$$\ln (P_f) = \beta_0 + \sum_{i=1}^{4} \beta_i x_i + \sum_{i=1}^{4} \beta_{ii} x_i^2 + \sum \sum_{i<j} \beta_{ij} x_i x_j ,$$

where x_i and x_j represent the independent variables and $\beta_{i,j}$ are the coefficients. The predicted conditional TWC probability is thus exp[ln (P_f)]. All analyses of variance results are for the transformed response variable ln (P_f).

Table 7.5. Comparison of dominant weld contribution P_d to conditional TWC probability, $P(F \mid E)$, as given by OCA-P calculation and by simple correlation for HBR-HYPO

Sequence No.	P_d, Dominant Weld Conditional TWC Probability[a]	Dominant Weld Fraction of Total $P(F\|E)$: $\hat{F}$ (From OCA-P Calculations)	Dominant Weld Fraction of Total $P(F\|E)$: $\hat{F}$ (Given by Simple Correlation[b])	Error[c] (%)
6.6	8.9E−3	0.71	0.70	−1.4
6.9	2.7E−3	0.78	0.74	−4.9
7.11	1.5E−3	0.79	0.76	−3.4
8.6	1.5E−2	0.67	0.68	1.7
9.9	2.5E−5	0.91	0.91	−0.2
9.11	7.5E−4	0.81	0.79	−2.8
9.12	9.6E−4	0.79	0.78	−1.4
9.17	4.3E−3	0.71	0.73	2.2
9.19	2.4E−3	0.75	0.75	−0.5
9.20	2.5E−3	0.74	0.75	0.6
9.22	1.2E−2	0.63	0.69	9.4
9.23	3.2E−3	0.74	0.74	−0.5
9.28	1.2E−4	0.88	0.85	−3.2
9.32	5.5E−5	0.89	0.88	−1.1
9.33	6.4E−6	0.94	0.96	1.7
9.41	2.6E−5	0.87	0.91	4.2
9.43	3.5E−4	0.80	0.81	1.8

[a]Unadjusted values of $P(F|E)$ reported in Chapter 5 and Appendix I; slight differences with values in this column and those given in Chapter 5 and Appendix I are due to minor revisions made in the fracture-mechanics models after the uncertainty and sensitivity analyses were initiated. The differences are expected to have little effect on the results of the uncertainty analysis.

[b]Correlation:

$$\hat{F} = -0.0354 \ln P_d + 0.5326 \text{ for } P_d > 1.84 \times 10^{-6}$$
$$= 1.0 \text{ for } P_d < 1.84 \times 10^{6}.$$

[c]Error $= (\hat{F}/F - 1) \times 100\%$.

7.3.2. Event-Tree Model for Uncertainty Analysis

Each branch of the event trees leading to the sequences listed in Table 7.3 was modeled explicitly for the uncertainty analysis. Each initiating-event and event-tree branch node probability was treated as a separate, independent random variable. The event frequency for each sequence was thus calculated for each Monte Carlo trial.

Table 7.6A. Response surface models for uncertainty and sensitivity analyses: input data

Design Point[a]	P_d, Dominant Weld Conditional TWC Probability[b]	Dominant Weld Fraction of Total $P(F\|E)$	Response Weighting[c]	Total $P(F\|E)$[d]	Natural Log of $P(F\|E)$
		Sequence 9.19B			
1	5.00E−04	0.802		6.24E−04	−7.380
2	3.78E−05	0.893		4.23E−05	−10.070
3	1.42E−02	0.683		2.08E−02	−3.874
4	1.75E−02	0.676		2.59E−02	−3.654
5	1.47E−05	0.927		1.59E−05	−11.051
6	3.46E−03	0.733		4.72E−03	−5.356
7	4.63E−03	0.723		6.40E−03	−5.051
8	6.77E−07	1.000		6.77E−07	−14.206
9	8.91E−02	0.618		1.44E−01	−1.937
10	1.30E−03	0.768		1.69E−03	−6.381
11	1.77E−03	0.757		2.34E−03	−6.058
12	4.14E−02	0.645		6.42E−02	−2.746
13	1.92E−04	0.836		2.30E−04	−8.378
14	2.96E−04	0.820		3.61E−04	−7.927
15	1.85E−02	0.674		2.75E−02	−3.595
16	5.81E−03	0.715		8.13E−03	−4.812
17	9.29E−03	0.698		1.33E−02	−4.320
18	4.24E−04	0.808		5.25E−04	−7.552
19	3.74E−05	0.893		4.19E−05	−10.081
20	2.65E−02	0.661		4.01E−02	−3.217
21	1.68E−05	0.922		1.82E−05	−10.913
22	2.84E−02	0.659		4.31E−02	−3.144
23	2.76E−02	0.660		4.18E−02	−3.174
24	1.45E−04	0.845		1.71E−04	−8.671
25	2.44E−03	0.746		3.27E−03	−5.722
26	9.25E−03	0.698		1.32E−02	−4.324
27	9.91E−03	0.696		1.42E−02	−4.252
28	8.07E−03	0.703		1.15E−02	−4.468
		Sequence 9.33			
1	2.45E−08	1.000	1.73E−01	2.45E−08	−17.525
2	e	e	e	e	e
3	1.04E−04	0.857	4.00E−01	1.21E−04	−9.017
4	2.23E−04	0.830	4.31E−01	2.69E−04	−8.222
5	1.51E−11	1.000	8.28E−02	1.51E−11	−24.916
6	4.94E−06	0.965	2.95E−01	5.12E−06	−12.183
7	1.67E−05	0.922	3.33E−01	1.81E−05	−10.919
8	e	e	e	e	e
9	7.71E−03	0.705	6.15E−01	1.09E−02	−4.515
10	2.66E−06	0.987	2.77E−01	2.69E−06	−12.824
11	7.20E−06	0.952	3.06E−01	7.56E−06	−11.792
12	1.62E−03	0.760	5.26E−01	2.13E−03	−6.151
13	4.61E−08	1.000	1.85E−01	4.61E−08	−16.892
14	2.36E−07	1.000	2.17E−01	2.36E−07	−15.259
15	5.89E−04	0.796	4.75E−01	7.40E−04	−7.209
16	8.42E−05	0.865	3.91E−01	9.74E−05	−9.237
17	9.47E−05	0.861	3.96E−01	1.10E−04	−9.115
18	1.50E−07	1.000	2.08E−01	1.50E−07	−15.713
19	2.07E−10	1.000	1.08E−01	2.07E−10	−22.298
20	8.32E−04	0.784	4.92E−01	1.06E−03	−6.848
21	3.02E−12	1.000	7.05E−02	3.02E−12	−26.526
22	1.21E−03	0.770	5.11E−01	1.57E−03	−6.456
23	2.55E−04	0.826	4.37E−01	3.09E−04	−8.082
24	8.99E−08	1.000	1.97E−01	8.99E−08	−16.225
25	6.32E−06	0.956	3.02E−01	6.61E−06	−11.927
26	1.22E−04	0.852	4.06E−01	1.43E−04	−8.851
27	1.52E−04	0.844	4.15E−01	1.80E−04	−8.622
28	3.87E−05	0.892	3.62E−01	4.34E−05	−10.046

Table 7.6A. (Continued)

Design Point[a]	P_d, Dominant Weld Conditional TWC Probability[b]	Dominant Weld Fraction of Total $P(F\|E)$	Response Weighting[c]	Total $P(F\|E)$[d]	Natural Log of $P(F\|E)$
		Sequence 9.41			
1	5.60E−07	1.000	2.37E−01	5.60E−07	−14.395
2	1.62E−09	1.000	1.32E−01	1.62E−09	−20.241
3	4.30E−04	0.807	4.61E−01	5.33E−04	−7.537
4	6.17E−04	0.794	4.78E−01	7.77E−04	−7.160
5	1.72E−09	1.000	1.33E−01	1.72E−09	−20.181
6	3.28E−05	0.898	3.56E−01	3.65E−05	−10.218
7	7.34E−05	0.870	3.86E−01	8.44E−05	−9.380
8	e	e	e	e	e
9	1.30E−02	0.686	6.48E−01	1.89E−02	−3.966
10	1.70E−05	0.921	3.33E−01	1.85E−05	−10.900
11	2.05E−05	0.915	3.40E−01	2.24E−05	−10.706
12	3.44E−03	0.733	5.67E−01	4.69E−03	−5.362
13	7.79E−07	1.000	2.45E−01	7.79E−07	−14.065
14	1.24E−06	1.000	2.57E−01	1.24E−06	−13.600
15	1.09E−03	0.774	5.06E−01	1.41E−03	−6.566
16	1.69E−04	0.840	4.20E−01	2.01E−04	−8.511
17	3.15E−04	0.818	4.47E−01	3.85E−04	−7.862
18	1.25E−06	1.000	2.57E−01	1.25E−04	−13.592
19	5.98E−09	1.000	1.51E−01	5.98E−09	−18.935
20	1.83E−03	0.756	5.32E−01	2.42E−03	−6.023
21	2.83E−10	1.000	1.11E−01	2.83E−10	−21.986
22	2.01E−03	0.752	5.37E−01	2.67E−03	−5.925
23	9.36E−04	0.779	4.98E−01	1.20E−03	−6.725
24	8.35E−07	1.000	2.47E−01	8.35E−07	−13.996
25	2.73E−05	0.905	3.50E−01	3.02E−05	−10.408
26	3.14E−04	0.818	4.46E−01	3.84E−04	−7.865
27	3.65E−04	0.813	4.53E−01	4.49E−04	−7.708
28	1.58E−04	0.842	4.17E−01	1.88E−04	−8.581

[a]See Table 7.4

[b]Unadjusted values of $P(F|E)$ reported in Chapter 5 and Appendix I; slight differences with values in this column and those given in Chapter 5 and Appendix I are due to minor revisions made in the fracture-mechanics models after the uncertainty and sensitivity analyses were initiated. The differences are expected to have little effect on the results of the uncertainty analysis.

[c]Weighting factor used in regression for Sequences 9.33 and 9.41; weighting factor not needed for Sequence 9.19B (see text).

[d]Total conditional TWC probability.

[e]Treated as missing value.

7.3.3. Combined Event-Tree and Fracture-Mechanics Models

As stated previously, the overall TWC frequency was obtained by summing, for each trial, the product of the sequence frequency and the conditional TWC probability. Since the RSM provided an estimate of the conditional TWC probability given one initial flaw, a technique for calculating the conditional TWC probability for any number of initial flaws was needed. The technique used relies on the assumption that multiple flaws in a volume are independent of each other. This implies that the existence of two flaws in a weld means that the probability of either flaw causing failure is not influenced by the presence

Table 7.6B. Response surface models for uncertainty and sensitivity analyses: analysis of variance[a]

Factors by Transient	Degrees of Freedom	Corrected Sum of Squares	R Square	F-Ratio	Probability of Achieving Greater F-Ratio[b]
		Sequence 9.19B			
Linear	4	239.0	0.952	3730.0	<0.0001
Quadratic	4	2.6	0.010	39.9	<0.0001
Crossproduct	6	9.3	0.037	97.1	<0.0001
Total Regression	14	250.9	0.999	1118.7	<0.0001
		Sequence 9.33			
Linear	4	133.2	0.916	680.5	<0.0001
Quadratic	4	3.2	0.022	16.4	<0.0001
Crossproduct	6	8.4	0.058	28.7	<0.0001
Total Regression	14	144.8	0.996	211.4	<0.0001
		Sequence 9.41			
Linear	4	132.6	0.917	611.0	<0.0001
Quadratic	4	3.4	0.024	15.7	<0.0001
Crossproduct	6	7.9	0.055	24.2	<0.0001
Total Regression	14	143.9	0.996	189.4	<0.0001
		Sequence 9.19B			
X_1, Temperature	5	20.6	4.1	257.0	<0.0001
X_2, $RTNDT_0$	5	84.5	16.9	1054.7	<0.0001
X_3, $\Delta RTNDT$	5	103.1	20.6	1286.5	<0.0001
X_4, K_{Ic}	5	50.2	10.0	627.2	<0.0001
		Sequence 9.33			
X_1, Temperature	5	15.1	3.0	61.8	<0.0001
X_2, $RTNDT_O$	5	63.8	12.7	260.7	<0.0001
X_3, $\Delta RTNDT$	5	80.0	16.0	327.1	<0.0001
X_4, K_{Ic}	5	27.0	5.4	110.6	<0.0001
		Sequence 9.41			
X_1, Temperature	5	15.1	3.0	55.8	<0.0001
X_2, $RTNDT_0$	5	63.9	12.8	235.6	<0.0001
X_3, $\Delta RTNDT$	5	73.4	14.7	270.7	<0.0001
X_4, K_{Ic}	5	26.9	5.4	99.0	<0.0001

[a]For definitions of terms, see R. H. Myers, *Response Surface Methodology*, Virginia Polytechnic Institute and State University, Blacksburg, Virginia (1976).

[b]Probability of achieving F-ratio greater than value given in preceding column.

of the other. Consider the case of two flaws per region, say flaws A and B, with $Pr(A) = P_A$ and $Pr(B) = P_B$. Since Pr(conditional TWC probability given two initial flaws) is Pr(*either* A or B causes a TWC),

$$
\begin{aligned}
Pr(\text{conditional TWC probability given two flaws}) &= Pr(A \cup B) = Pr(A) + Pr(B) - Pr(A \cap B) \\
&= P_A + P_B - P_A P_B \\
&\simeq 2P_f;\ P_A = P_B = P_f \text{ and } P_f << 1.
\end{aligned}
$$

Table 7.6C. Response surface models for uncertainty and sensitivity analyses: estimated coefficients[a]

Parameter	Degrees of Freedom	Estimated Coefficients	Standard Deviation	T-Ratio	Probability of Achieving Greater T-Ratio[b]
		Sequence 9.19B			
Intercept	1	−5.8136	0.079	−74.00	<0.0001
X_1, Temperature	1	−0.87838908	0.026	−34.00	<0.0001
X_2, $RTNDT_0$	1	1.7499	0.025	68.80	<0.0001
X_3, $\Delta RTNDT$	1	1.9329	0.025	76.00	<0.0001
X_4, K_{Ic}	1	1.3885	0.025	−54.59	<0.0001
X_1*X_1	1	−0.03341509	0.028	−1.21	0.2495
X_1*X_2	1	0.22523808	0.032	7.12	<0.0001
X_2*X_2	1	−0.21319282	0.029	−7.41	<0.0001
X_1*X_3	1	0.25199246	0.032	7.96	<0.0001
X_2*X_3	1	−0.56995062	0.032	−18.01	<0.0001
X_3*X_3	1	−0.30849012	0.029	−10.73	<0.0001
X_1*X_4	1	−0.11612912	0.032	−3.67	0.0028
X_2*X_4	1	0.23960962	0.032	7.57	<0.0001
X_3*X_4	1	−0.27073737	0.032	8.56	<0.0001
X_4*X_4	1	−0.03045245	0.029	−1.06	0.3089
		Sequence 9.33			
Intercept	1	−12.1383	0.231	−52.52	<0.0001
X_1, Temperature	1	−1.6903	0.101	−16.82	<0.0001
X_2, $RTNDT_0$	1	3.9089	0.113	34.55	<0.0001
X_3, $\Delta RTNDT$	1	4.5973	0.120	38.42	<0.0001
X_4, K_{Ic}	1	−2.1320	0.095	−22.35	<0.0001
X_1*X_1	1	−0.05813934	0.086	−0.68	0.5120
X_1*X_2	1	0.33585602	0.113	2.98	0.0124
X_2*X_2	1	−0.60697646	0.094	−6.49	<0.0001
X_1*X_3	1	0.48294611	0.115	4.20	0.0015
X_2*X_3	1	−1.5327	0.127	−12.05	<0.0001
X_3*X_3	1	−0.91859515	0.098	−9.41	<0.0001
X_1*X_4	1	−0.10872267	0.105	−1.04	0.3210
X_2*X_4	1	0.35317589	0.109	3.24	0.0079
X_3*X_4	1	0.44886940	0.111	4.04	0.0019
X_4*X_4	1	−0.00696221	0.088	−0.08	0.9382
		Sequence 9.41			
Intercept	1	−10.5595	0.229	−46.21	<0.0001
X_1, Temperature	1	−1.4901	0.091	−16.41	<0.0001
X_2, $RTNDT_0$	1	3.2850	0.097	33.80	<0.0001
X_3, $\Delta RTNDT$	1	3.6432	0.101	36.13	<0.0001
X_4, K_{Ic}	1	−1.9000	0.089	−21.30	<0.0001
X_1*X_1	1	−0.03555431	0.084	−0.42	0.6793
X_1*X_2	1	0.33630383	0.105	3.21	0.0075
X_2*X_2	1	−0.48562356	0.090	−5.40	0.0002
X_1*X_3	1	0.45126698	0.106	4.28	0.0011
X_2*X_3	1	−1.2479	0.111	−11.26	<0.0001
X_3*X_3	1	−0.71472784	0.092	−7.73	<0.0001
X_1*X_4	1	−0.08346633	0.102	−0.80	0.4285
X_2*X_4	1	0.29567703	0.105	2.81	0.0157
X_3*X_4	1	0.25044556	0.106	2.37	0.0357
X_4*X_4	1	0.05024361	0.086	0.58	0.5696

[a]For definitions of terms, see R. H. Myers, *Response Surface Methodology*, Virginia Polytechnic Institute and State University, Blacksburg, Virginia (1976).

[b]Probability of achieving T-ratio greater than value given in preceding column.

Table 7.6D. Response surface models for uncertainty and sensitivity analyses: comparison of RSM predictions of $P(F|E)$ with OCA-P-calculated values

Design Point	Conditional TWC Probability, $P(F\|E)$		Error (%)	95% Confidence Interval on Predicted $P(F\|E)$	
	OCA-P Calculation[a]	RSM Prediction		L95M[b]	U95M[b]
		Sequence 9.19B			
1	6.24E−04	5.46E−04	−12.5	4.43E−04	6.72E−04
2	4.23E−05	4.57E−05	8.1	3.71E−05	5.63E−05
3	2.08E−02	2.23E−02	7.3	1.81E−02	2.74E−02
4	2.59E−02	2.86E−02	10.6	2.33E−02	3.53E−02
5	1.59E−05	1.54E−05	−2.7	1.25E−05	1.90E−05
6	4.72E−03	4.60E−03	−2.5	3.74E−03	5.66E−03
7	6.40E−03	6.58E−03	2.7	5.34E−03	8.10E−03
8	6.77E−07	8.13E−07	20.1	6.60E−07	1.00E−06
9	1.44E−01	1.20E−01	17.0	9.72E−02	1.47E−01
10	1.69E−03	1.64E−03	−2.9	1.34E−03	2.02E−03
11	2.34E−03	2.39E−03	2.3	1.94E−03	2.94E−03
12	6.42E−02	6.77E−02	5.5	5.49E−02	8.33E−02
13	2.30E−04	2.13E−04	−7.2	1.73E−04	2.63E−04
14	3.61E−04	3.45E−04	−4.3	2.80E−04	4.25E−04
15	2.75E−02	2.61E−02	5.1	2.12E−02	3.21E−03
16	8.13E−03	9.26E−03	14.0	7.52E−03	1.14E−02
17	1.33E−02	1.51E−02	13.8	1.23E−02	1.87E−02
18	5.25E−04	4.51E−04	−14.1	3.66E−04	5.56E−04
19	4.19E−05	3.85E−05	−8.1	3.12E−05	4.74E−05
20	4.01E−02	4.21E−02	5.2	3.44E−02	5.17E−02
21	1.82E−05	1.82E−05	0.1	1.48E−05	2.24E−05
22	4.31E−02	4.15E−02	−3.7	3.39E−02	5.09E−02
23	4.18E−02	4.25E−02	1.6	3.47E−02	5.21E−02
24	1.71E−04	1.65E−04	−4.1	1.34E−04	2.03E−04
25	3.27E−03	2.99E−03	−8.7	2.52E−03	3.54E−03
26	1.32E−02	1.39E−02	4.8	1.21E−02	1.60E−02
27	1.42E−02	1.52E−02	6.5	1.32E−02	1.74E−02
28	1.15E−02	1.16E−02	1.2	1.01E−02	1.33E−02
		Sequence 9.33			
1	2.45E−08	9.87E−09	−59.7	4.13E−09	2.36E−08
2	[c]	8.12E−11	[c]	2.33E−11	2.83E−10
3	1.21E−04	1.33E−04	9.3	6.98E−05	2.52E−04
4	2.69E−04	3.23E−04	20.4	1.73E−04	6.05E−04
5	1.41E−11	3.47E−11	129.9	1.26E−11	9.55E−11
6	5.12E−06	4.18E−06	−18.4	2.04E−06	8.57E−06
7	1.81E−05	1.83E−05	1.3	9.24E−06	3.64E−05
8	[c]	1.85E−13	[c]	4.93E−14	6.92E−13
9	1.09E−02	9.44E−03	−13.7	5.35E−03	1.67E−02
10	2.69E−06	1.91E−06	−29.0	9.29E−02	3.94E−06
11	7.56E−06	6.84E−06	−9.5	3.40E−06	1.38E−05
12	2.13E−03	2.05E−03	−3.7	1.14E−03	3.70E−03
13	4.61E−08	3.90E−08	−15.0	1.72E−08	8.85E−08
14	2.36E−07	2.51E−07	6.5	1.16E−07	5.46E−07
15	7.40E−04	8.21E−04	10.9	4.37E−04	1.54E−03
16	9.74E−05	1.16E−04	18.7	6.05E−05	2.21E−04
17	1.10E−04	1.25E−04	13.3	6.54E−05	2.38E−04
18	1.50E−07	1.44E−07	−3.8	6.35E−08	3.28E−07
19	2.07E−10	1.90E−10	−8.2	6.89E−11	5.24E−10
20	1.06E−03	1.17E−03	10.5	6.53E−04	2.11E−03
21	3.02E−12	1.38E−11	356.5	4.54E−12	4.18E−11
22	1.57E−03	1.34E−03	−14.9	7.48E−04	2.39E−03
23	3.09E−04	3.70E−04	19.8	2.02E−04	6.79E−04
24	8.99E−08	7.32E−08	−18.6	3.26E−08	1.64E−07
25	6.61E−06	5.35E−06	−19.0	3.22E−06	8.90E−06
26	1.43E−04	1.45E−04	1.5	9.65E−05	2.19E−04
27	1.80E−04	2.12E−04	17.6	1.41E−04	3.19E−04
28	4.34E−05	4.48E−05	3.3	2.95E−05	6.80E−05

Table 7.6D. (Continued)

Design Point	Conditional TWC Probability, $P(F\|E)$ OCA-P Calculation[a]	RSM Prediction	Error (%)	95% Confidence Interval on Predicted $P(F\|E)$ L95M[b]	U95M[b]
		Sequence 9.41			
1	5.60E−07	2.31E−07	−58.8	1.08E−07	4.94E−07
2	1.62E−09	2.87E−09	77.1	1.17E−09	7.03E−09
3	5.33E−04	5.65E−04	6.0	3.05E−04	1.04E−03
4	7.77E−04	1.01E−03	29.4	5.48E−04	1.85E−03
5	1.72E−09	2.05E−09	19.1	8.35E−10	5.02E−09
6	3.65E−05	2.69E−05	−26.3	1.38E−05	5.25E−05
7	8.44E−05	7.59E−05	−10.0	3.96E−05	1.45E−04
8	[c]	1.82E−11	[c]	5.86E−12	5.67E−11
9	1.89E−02	1.67E−02	−11.8	9.43E−03	2.96E−02
10	1.85E−05	1.63E−05	−11.4	8.28E−06	3.23E−05
11	2.24E−05	2.43E−05	8.4	1.23E−05	4.78E−08
12	4.69E−03	4.84E−03	3.3	2.72E−03	8.63E−03
13	7.79E−07	5.58E−07	−28.4	2.61E−07	1.19E−06
14	1.24E−06	1.31E−06	5.9	6.24E−07	2.76E−06
15	1.41E−03	1.32E−03	−6.5	7.21E−04	2.40E−03
16	2.01E−04	2.73E−04	35.9	1.45E−04	5.16E−04
17	3.85E−04	4.43E−04	15.1	2.38E−04	8.26E−04
18	1.25E−06	1.14E−06	−8.6	5.41E−07	2.42E−06
19	5.98E−09	5.21E−09	−12.8	2.18E−09	1.25E−08
20	2.42E−03	2.65E−03	9.6	1.49E−03	4.72E−03
21	2.83E−10	1.02E−09	259.9	4.01E−10	2.59E−09
22	2.67E−03	2.17E−03	−18.7	1.22E−03	3.87E−03
23	1.20E−03	1.42E−03	18.1	7.90E−04	2.54E−03
24	8.35E−07	7.10E−07	−15.0	3.33E−07	1.51E−06
25	3.02E−05	2.59E−05	−14.0	1.58E−05	4.27E−05
26	3.84E−04	4.26E−04	11.1	2.86E−04	6.37E−04
27	4.49E−04	4.85E−04	8.0	3.25E−04	7.24E−04
28	1.88E−04	1.82E−04	−2.7	1.22E−04	2.73E−04

[a]See Chapter 5 discussion of OCA-P calculations.

[b]L95M — lower 95th percentile of median value;
U95M — upper 95th percentile of median value.

[c]Treated as missing value.

The above expression is valid as long as the two conditional TWC probabilities are independent, i.e., as long as the presence of the second flaw makes no difference whether the first flaw causes a TWC.

This logic can obviously be expanded for the case of more than two initial flaws. For example:

$$
\begin{aligned}
Pr(\text{conditional TWC given three flaws}) &= Pr(A \text{ or } B \text{ or } C \text{ fails}) \\
&= Pr(A) + Pr(B) + Pr(C) - Pr(A \cap B) \\
&\quad - Pr(A \cap C) - Pr(B \cap C) + Pr(A \cap B \cap C) \\
&= 3P_f - 3P_f^2 + P_f^3 \\
&= 3P_f;\ P_A = P_B = P_C = P_f \text{ and } P_f << 1.
\end{aligned}
$$

The general case is now obvious given any number of flaws and can be written as

$$Pr(\text{conditional TWC given } N \text{ flaws}) = 1 - (1 - P_f)^N.$$

Given this expression, it is then necessary to calculate the probability of having N initial flaws in the region. This is obtained from the Poisson distribution, where the parameter of the Poisson is the mean number of flaws in the volume of interest MV. MV is the product of the mean flaw density per unit volume M and the region volume V. The Poisson distribution function is

$$Pr(N \text{ flaws}) = e^{-MV} \frac{(MV)^N}{N!} .$$

The conditional TWC probability is calculated for each trial by first sampling from the initial flaw density distribution function to obtain a specific mean initial flaw density. Given this flaw density, the probability of a given number of flaws and the conditional TWC probability for that number of flaws are calculated. The total for all possible number of flaws is given by

$$Pr(\text{total conditional TWC probability}) = \sum_{n=1}^{\infty} Pr(N \text{ flaws}) \times Pr(\text{conditional TWC probability given } N \text{ flaws}) .$$

It should be noted that this expression is equivalent to the product of the number of flaws, NV, times the conditional TWC probability given one initial flaw for values of the product <0.05. Consequently, the expression given in Chapter 5 is accurate for all except the extreme case.

7.3.4. Error Distributions for Temperature and Pressure Histories

Uncertainties in the calculated temperature and pressure time histories were supplied by Idaho National Engineering Laboratory.[5] These error bounds were provided for classes of transients as shown in Table 7.7. The dominant sequences identified previously are described almost without exception with the first two sets of uncertainties. The errors shown here were utilized in generating the adjusted temperature and pressure profiles used in generating the data used in the RSMs. An example of an error-adjusted temperature profile is shown in Figure 7.3. As noted previously, the pressure uncertainty was not included in the uncertainty analysis since it showed a weak influence on the results relative to the included variables.

7.3.5. Results

The overall TWC frequency distribution estimated by the uncertainty analysis is shown in Figures 7.4 and 7.5 and summarized in Table 7.8. This distribution is based on 6000 trial runs in the Monte Carlo analysis.

Table 7.7. Uncertainties in reactor vessel downcomer fluid temperature and pressure

Temperature (°F)	±2σ Error (°F)	Pressure (psia)	±2σ Error (psi)
Sequences involving small steam-line breaks only (5.1-5.30, 7.1-7.20, 9.2-9.47, 9.57-9.65, 9.75-9.80, 9.86-9.87)			
550	±5	2400	±20
<400	±25	1800	±125
<200	±25	1500	±160
<100	±5	1400	±165
		1000	±180
		800	±180
Sequences involving large steam-line breaks only (6.1-6.16, 8.1-8.10)			
550	±5	2400	±20
400	+25, -40	1800	±125
200	+25, -50	1500	±160
100	±5	1400	±165
		1000	±180
		800	+180, -220
Sequences not involving primary or secondary breaks (9.1, 9.48-9.56, 9.66-9.74, 9.81-9.85)			
All temperatures	±5	All pressures	±20
Sequences involving nonisolatable LOCAs (1.1-1.22, 3.1-3.3)			
550	±5	2500	±50
400	±40	1000	±50
300	±70	800	±160
160	+70, -47	400	±160
100	+27, -7	200	±50
		140	±17
Sequences involving isolatable small-break LOCAs (11.1-11.10)			
550	±5	2500	+50, -50
400	±40	2000	+100, -250
300	±70	1200	+250, -100
160	±70	1000	+250, -50
100	+40, -10	800	±160
		400	±160
		200	±70
		140	±25
Sequences involving isolatable medium-break LOCAs (12.1-12.5)			
550	±5	2500	±25
400	±40	2250	±25
300	±70	1800	±200
160	±70	800	±160
100	+40, -10	400	±160
		200	±75
		140	±25

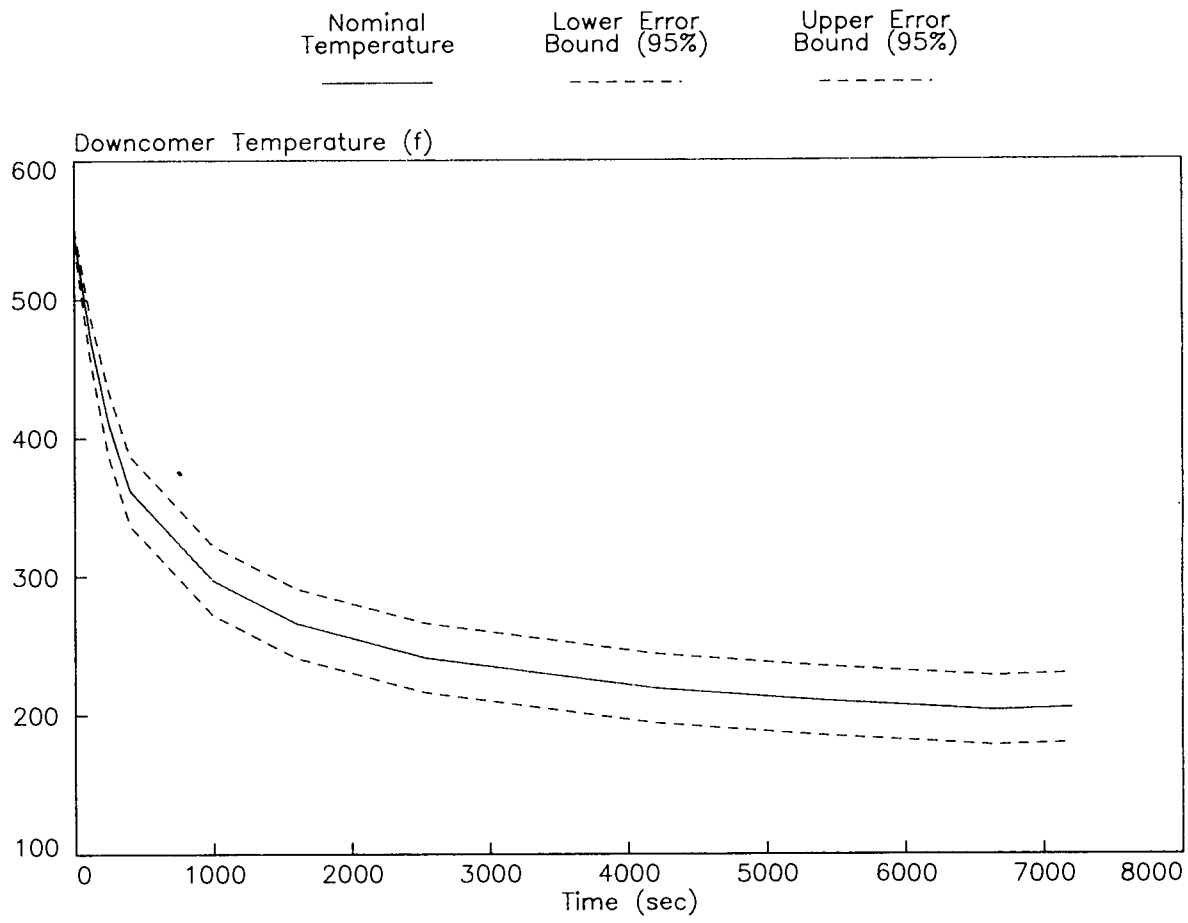

Figure 7.3. Sequence 9.19B temperature profile and error bounds.

The uncertainty analysis was then used to estimate the mean values of the conditional TWC probabilities and the TWC frequencies for each of the 55 dominant sequences contributing 99.0% of the overall TWC frequency for the HBR-HYPO vessel. The results are compared with the point values in Table 7.9.

7.4. Sensitivity Analysis

The sequences identified in Table 7.3 were used to estimate the sensitivity of the TWC frequency to changes in the individual variables for the base case HBR-HYPO vessel. In all cases, the variable changes were made only in the PTS-adverse direction.

For the sensitivity calculations in which the initiating-event frequencies and branch probabilities were the variables, the changes in the individual variables were introduced by using the 95 percentile values of the event frequencies and branch probabilities. The 95 percentile values are given in the last columns of Tables 7.1 and 7.2. The revised sequence frequencies were then combined with the conditional TWC probabilities for *RTNDT* = 270°F to estimate new TWC frequencies for the base case with the revised values of the variables.

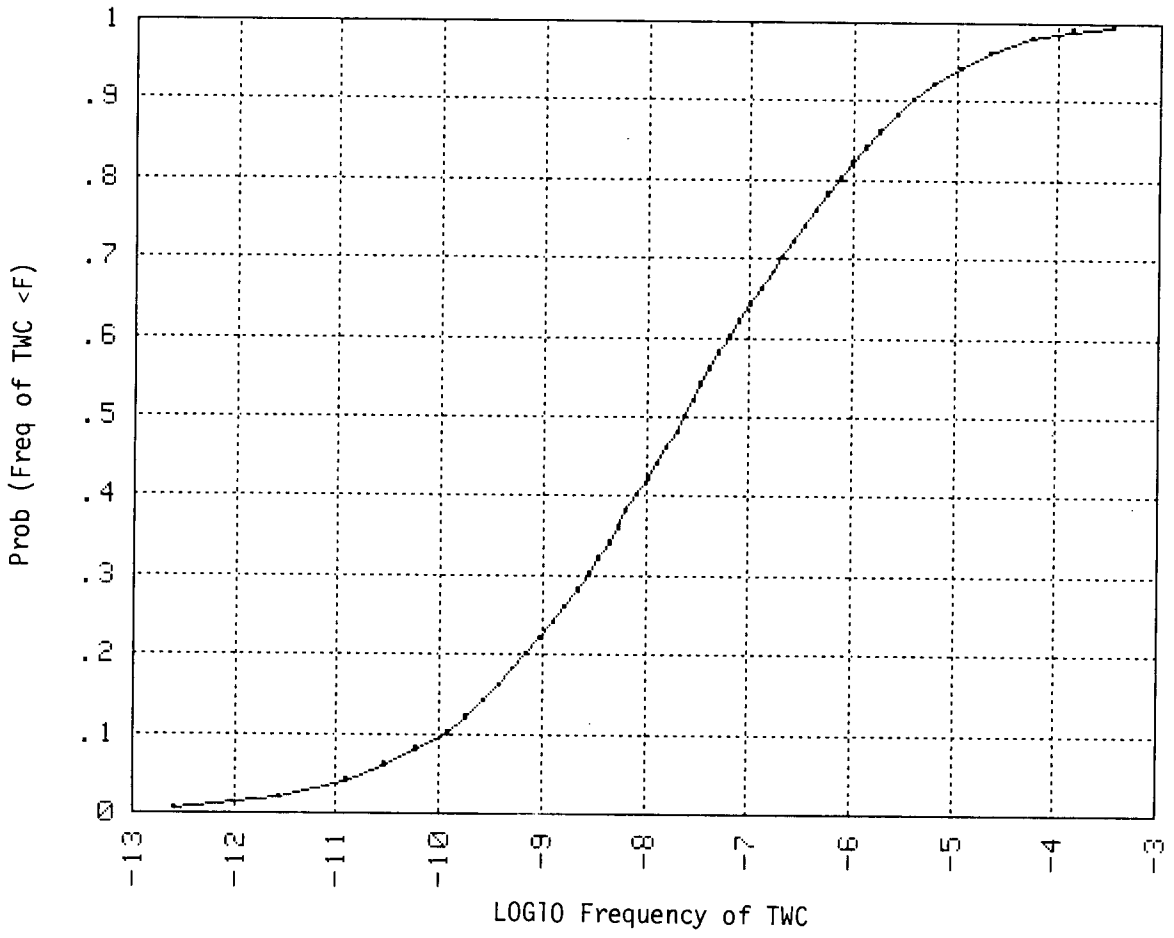

Figure 7.4. Through-the-wall crack frequency cumulative distribution function.

For the sensitivity calculations in which the fracture-mechanics variables were changed, conditional TWC probabilities were calculated using values of the variables displaced one standard deviation beyond the base case values in the PTS-adverse direction. These values were then utilized in conjunction with the appropriate sequence frequencies to estimate TWC frequency values corresponding to the revised value for each fracture-mechanics variable.

In all cases, the TWC frequency estimated with the variable displayed in the PTS-adverse direction was divided by the TWC frequency estimated with each variable at its mean value in order to rank the impact of the variables on the frequency estimate. The resulting rankings are presented in Table 7.10.

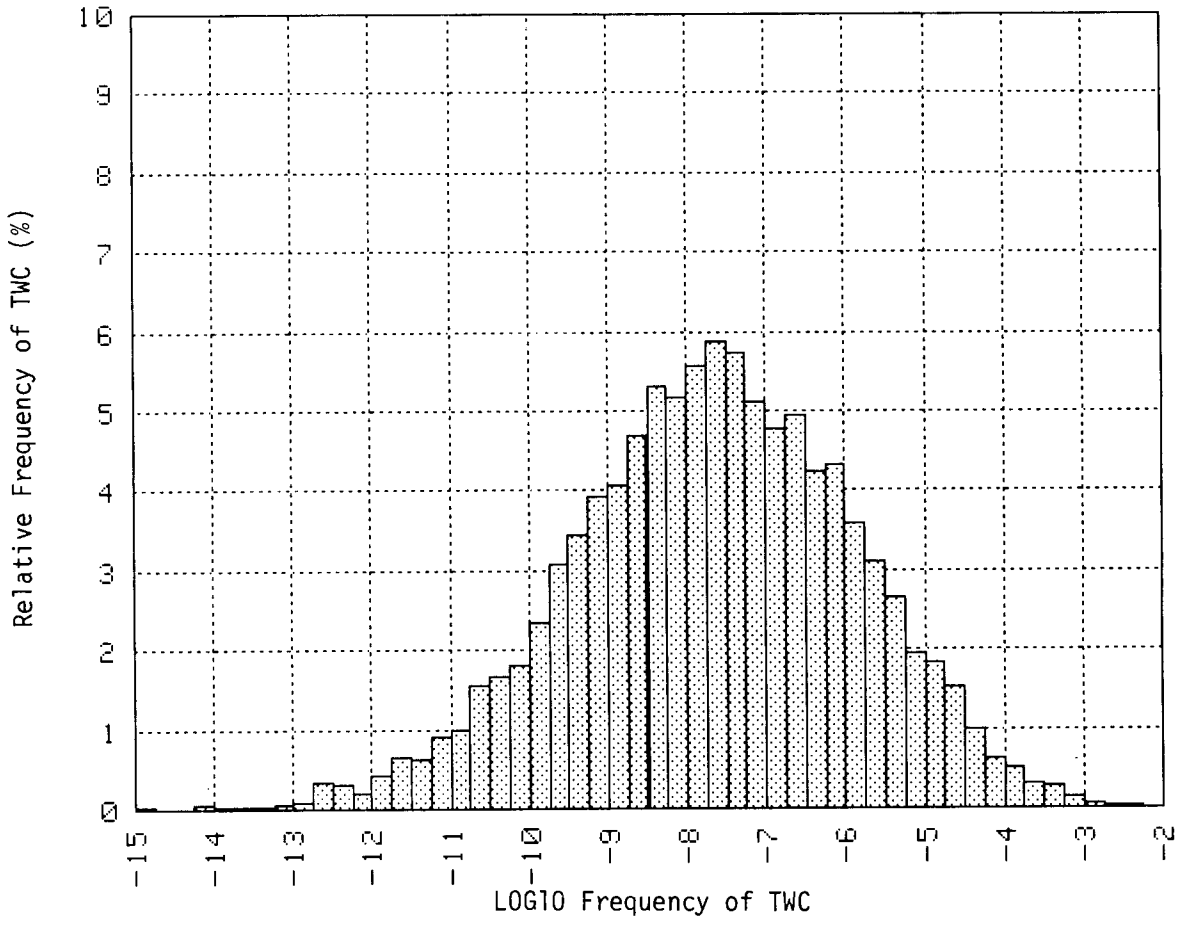

Figure 7.5. Relative frequency of through-the-wall crack frequency.

7.5. Discussion

The overall TWC frequency distribution determined in the uncertainty analysis (Figures 7.4 and 7.5) shows that the 5% and 95% values for the distribution lie at 1.4×10^{-11} and 1.55×10^{-5} per year, respectively. The output distribution is not well described by a log-normal distribution. The primary reason for this is that the flaw density distribution is truncated at a maximum of 500 flaws per cubic meter. This effect tends to limit the upper tail of the distribution with respect to a typical log-normal distribution.

The ranges utilized in the analysis for individual parameters were based on either plant-specific or generic data, or were consistent with ranges used in other analyses, except for flaw densities. Very little data exist for the flaw density parameter, and the chosen upper and lower bounds and mean reflect this fact. The distribution for this parameter contributed significantly to the range of the overall TWC frequency distribution. Monte Carlo cases run with a single value for flaw density exhibited less than one-tenth of the distribution range that the final result exhibits.

Table 7.8. Through-the-wall crack frequency distribution estimated by uncertainty analysis

Mean value of TWC frequency = 8.4E−06 yr^{-1}
Standard deviation = 9.9E−5

Percentile	Function Value
5	1.9E−11
10	1.1E−10
20	6.8E−10
25	1.4E−9
30	2.7E−9
40	8.0E−9
50	2.3E−8
60	6.3E−8
70	2.0E−7
75	3.8E−7
80	7.3E−7
90	3.8E−6
95	1.5E−5
99	1.3E−4

As can be seen in Table 7.10, fracture-mechanics and thermal-hydraulic variables dominate the sensitivity, with the flaw density having the greatest impact. Sensitivity to $\Delta RTNDT$ and $RTNDT_0$ rank second and third, respectively, with the TWC frequencies being approximately 8% and 6% as sensitive to variations in $\Delta RTNDT$ and $RTNDT_0$ as to variations in flaw density.

In general, sequence initiating-event frequency and branch probability changes had smaller impacts, varying from a high of a factor of 2.0 (for failure of three or more SDVs to close) down to essentially no contribution (a factor of 1.0) for five of the variables. The sensitivity of the TWC frequency to initiating-event frequencies and branch probabilities is overwhelmed by sensitivity to flaw density, $\Delta RTNDT$, and $RTNDT_0$ variations.

As stated in the introduction to this chapter, this analysis was concerned with uncertainties and sensitivities to changes in calculational parameters. In addition to these uncertainties, others exist and must be recognized. These include (1) uncertainties in the event sequences, thermal-hydraulic models, and fracture-mechanics models; and (2) uncertainties in the way sequences were binned and the assignment of thermal-hydraulic characteristics for sequences not analyzed in detail. These additional uncertainties will further increase the variance in the distribution and may change its mean, although the extent of the increase is not known.

7.6. References

1. R. D. Cheverton and D. G. Ball, *OCA-P, A Deterministic and Probabilistic Fracture-Mechanics Code for Application to Pressure Vessels*, NUREG/CR-3618 (ORNL-5991), Oak Ridge National Laboratory (May 1984).
2. *Reactor Safety Study: An Assessment of Accident Risks in U.S. Commercial Nuclear Power Plants*, NUREG 75/014 (WASH-1400), U.S. Nuclear Regulatory Commission (October 1975).

Table 7.9. Comparison of simulation mean values of through-the-wall crack frequencies with estimated point values[a]

Case No.[b]	Sequence Number	Point Values (Base Case)[c] $P(F\|E)$, Conditional TWC Probability	Point Values (Base Case)[c] TWC Frequency (yr^{-1})	Simulation Mean Values $P(F\|E)$, Conditional TWC Probability	Simulation Mean Values TWC Frequency (yr^{-1})
1	9.41	8.9E−07	3.6E−09	5.5E−04	2.1E−06
2	9.33	2.1E−07	2.9E−09	2.5E−04	3.4E−06
3	9.24	9.6E−05	2.3E−09	9.5E−03	3.5E−07
4	9.94	9.6E−05	6.9E−10	9.7E−03	1.1E−07
5	9.19B	9.6E−05	6.5E−10	9.6E−03	4.3E−08
6	9.43	1.2E−05	5.0E−10	1.4E−03	5.2E−08
7	9.20B	1.0E−04	3.5E−10	1.0E−02	4.4E−08
8	9.19A	1.0E−07	3.4E−10	1.7E−04	8.9E−07
9	9.26	1.9E−07	2.8E−10	2.9E−04	1.8E−07
10	6.16	5.7E−04	2.5E−10	4.4E−02	6.8E−09
11	9.02	1.7E−08	2.2E−10	2.9E−05	2.0E−07
12	9.95	9.6E−05	1.8E−10	9.6E−03	1.3E−08
13	8.10	6.6E−04	1.5E−10	5.0E−02	1.1E−08
14	9.27	1.0E−07	1.5E−10	1.5E−04	1.4E−07
15	9.91	5.7E−04	1.5E−10	4.4E−02	8.7E−09
16	9.35	1.0E−06	1.4E−10	7.0E−04	5.1E−08
17	6.07	1.0E−04	1.3E−10	1.0E−02	3.9E−09
18	9.97	5.6E−05	1.3E−10	5.8E−03	5.7E−09
19	5.21	1.7E−08	1.2E−10	2.5E−05	2.3E−07
20	6.10	1.0E−04	1.1E−10	1.0E−02	7.3E−09
21	7.12B	3.6E−06	8.6E−11	2.4E−03	5.8E−08
22	9.01	1.0E−11	8.5E−11	1.7E−08	1.1E−07
23	5.30	9.6E−05	6.3E−11	9.3E−03	7.2E−09
24	9.28	4.0E−06	6.0E−11	2.7E−03	3.6E−08
25	8.06	6.6E−04	5.1E−11	4.9E−02	2.6E−09
26	11.10	5.6E−05	5.3E−11	6.2E−03	2.9E−09
27	9.42	1.2E−06	5.0E−11	7.5E−04	1.8E−08
28	11.07	5.6E−05	4.0E−11	5.8E−03	6.7E−09
29	9.21B	5.7E−04	4.0E−11	4.3E−02	3.0E−09
30	9.21A	1.0E−06	3.5E−11	6.9E−04	1.8E−08
31	9.34	2.5E−07	3.5E−11	4.2E−04	2.8E−08
32	12.04	1.1E−06	3.3E−11	6.5E−04	1.0E−08
33	13.01	1.0E−08	3.0E−11	1.5E−05	4.1E−08
34	11.09	5.6E−05	2.9E−11	5.6E−03	3.1E−09
35	9.90	1.0E−04	2.6E−11	1.0E−02	9.0E−09
36	9.23A	1.0E−06	2.6E−11	6.9E−04	9.8E−09
37	9.09B	8.4E−07	2.3E−11	6.1E−04	8.6E−09
38	9.22B	5.7E−04	2.0E−11	4.4E−02	1.0E−09
39	9.36	1.3E−05	2.0E−11	1.5E−03	1.4E−09
40	6.11	1.0E−04	1.9E−11	1.1E−02	1.3E−09
41	8.04	6.6E−04	1.7E−11	4.9E−02	3.3E−10
42	9.03	1.3E−07	1.7E−11	2.1E−04	1.5E−08
43	9.37	1.5E−07	1.6E−11	2.5E−04	2.0E−08
44	3.01	2.0E−08	1.5E−11	2.4E−05	1.6E−08
45	9.44	3.6E−05	1.5E−11	4.1E−03	9.3E−10
46	9.45	4.7E−07	1.5E−11	4.0E−04	5.6E−09
47	8.01	1.3E−06	1.4E−11	9.6E−04	1.3E−08
48	5.03	1.9E−07	1.4E−11	2.3E−04	1.8E−08
49	7.13B	3.6E−06	1.3E−11	2.4E−03	6.9E−04
50	5.14	5.3E−07	1.2E−11	3.5E−04	7.7E−09
51	9.09A	4.0E−09	1.1E−11	5.6E−06	1.6E−08
52	9.04	7.1E−08	9.9E−12	1.2E−04	1.1E−08
53	5.23	1.3E−07	9.5E−12	1.9E−04	9.6E−09
54	7.20	3.6E−05	9.0E−12	4.1E−03	5.2E−10
55	14.02	1.0E−08	9.0E−12	1.7E−05	8.6E−09
	Total		1.5E−08		8.4E−06

[a]Estimated point values for HBR-HYPO base case taken from Table 6.1 in Chapter 6; estimated simulation mean values obtained from uncertainty analysis.

[b]In same order as given in Table 7.3.

[c]Base case is HBR-HYPO v ssel at 32 EFPY ($RTNDT + 2\sigma = 270°F$).

Table 7.10. Ranked PTS variable sensitivities for base case of *RTNDT* = 270°F

Variable	Perturbation	Sensitivity $\left(\frac{\text{TWC Frequency at Perturbed Value}}{\text{TWC Frequency with No Perturbation}}\right)$
Flaw density	×100	99.8
$\Delta RTNDT$	+24°F	7.7[a]
$RTNDT_0$	+17°F	6.2[a]
K_{Ic}	−15%	3.3[b]
Downcomer temperature	−50°F	2.4
≥ Three SDVs fail to close (frequency)	×15	2.0
All STM PORVs fail to close (frequency)	×15	1.9
Two PORVs fail to close (frequency)	×15	1.6
Charging flow fails to run back (frequency)	×10	1.2
OA: Fails to close MSIV (frequency)	×10	1.2
Large steam-line break (frequency)	×15	1.2
Multiplier for large steam-line break at hot 0% power	×15	1.1
Small steam-line break (frequency)	×10	1.1
OA: Fails to throttle AFW (frequency)	×10	1.1
OA: Fails to isolate AFW to low-pressure SG (frequency)	×10	1.1
Small LOCA (frequency)	×10	1.0
Multiplier for small LOCA at hot 0% power	×10	1.0
Late LOCA isolation (frequency)	×10	1.0
Multiplier for steam-line break at hot 0% power	×10	1.0
Loss-of-feedwater (frequency)	×15	1.0

[a] $RTNDT$ = nil ductility reference temperature

$= RTNDT_0 + \Delta RTNDT$,

where $RTNDT_0$ is zero-fluence value of $RTNDT$ and $\Delta RTNDT$ is an increase in $RTNDT$ due to radiation damage (see Chapter 5).

[b] K_{Ic} = static crack initiation value (see Chapter 5).

3. D. L. Selby *et al.*, *Pressurized Thermal Shock Evaluation of the Calvert Cliffs Unit 1 Nuclear Power Plant*," NUREG/CR-4022 (ORNL/TM-9408), September 1985.

4. R. H. Myers, *Response Surface Methodology*, Virginia Polytechnic Institute and State University, Blacksburg, Virginia (1976).

5. Personal communication to D. L. Selby, ORNL.

Chapter 8

CONCLUSIONS AND RECOMMENDATIONS

D. L. Selby, R. D. Cheverton, and G. F. Flanagan
Oak Ridge National Laboratory

D. P. Bozarth
Science Applications International Corporation

8. CONCLUSIONS AND RECOMMENDATIONS

8.1. Introduction

The conclusions and recommendations presented in this chapter are divided into two parts: those specific to H. B. Robinson Unit 2 (HBR-2); and those having to do with future applications of the pressurized thermal shock (PTS) evaluation technique to other nuclear power plants.

The conclusions considered specific to H. B. Robinson are presented in Section 8.2 under five categories: (1) the characteristics of HBR-2 which were found to have a major impact on the PTS risk, (2) the conclusions from the accident (overcooling) sequence analysis, (3) the conclusions from the fracture-mechanics analysis, (4) the conclusions from the uncertainty and sensitivity analyses, and (5) general comments on the study.

The areas in the PTS analysis technique needing further study are summarized in Section 8.3. As is always the case when a new analysis method is introduced, these first applications of the PTS analysis technique — to Oconee Unit 1, Calvert Cliffs Unit 1, and HBR-2 — have uncovered areas that should be studied and developed further before the technique is applied to other systems. Since HBR-2 is the third plant to which the technique has been applied, this particular analysis itself has already benefitted from improvements whose need became apparent in the two preceding analyses. Still, there are other improvements which, as discussed below, would yield better estimates of the PTS risk.

8.2. Conclusions Specific to HBR-2

8.2.1. HBR-2 System Features Influencing PTS Analysis Results

Chapter 2 of this report describes the seven major systems of HBR-2, with emphasis given to both the positive and the negative effects of the system components on overcooling transients. The chapter also describes three support systems which influence the behavior of components within the seven major systems. Several features of these various systems were found to significantly influence the through-the-wall crack (TWC) frequencies for the pressure vessel. These features can be summarized as follows:

(1) The three-loop design of HBR-2 has two major effects on the potential of a PTS-induced vessel failure. The first involves the frequency of the sequences. Many of the identified sequences have a higher frequency of occurrence in a three-loop design than they would have in a two-loop design simply because there are more chances for a component failure to occur. The second is that secondary system cooldown events which involve only one loop in a three-loop system result in less severe cooldown rates than those which involve one loop in a two-loop system.

(2) The shutoff head of the high-pressure injection (HPI) system (1470 psia) slows repressurization following a cooldown or loss-of-coolant event. Above

1470 psia, repressurization occurs through the operation of the charging pumps (a low flow rate system) and/or the thermal expansion of the liquid coolant. This is a slower process than would occur if the HPI system could fully repressurize the system.

(3) The use of check valves in the steam line reduces the impact of steam-line breaks upstream of the main steam isolation valves (MSIVs).

(4) The steam power-operated relief valves (STM PORVs) can not be isolated by an operator action in the control room. As a result, there will be some delay before a steam generator (SG) blowdown can be terminated following the failure of the STM PORV(s). This delay can result in an increased cool-down of the primary system.

(5) The presence of the MSIVs reduces the PTS risk by approximately two orders of magnitude since steam-line breaks [includes failures of steam dump valves (SDVs)] downstream of the MSIV locations can be isolated.

(6) The MSIVs receive an automatic closure signal if a high steam flow signal occurs coincident with either a low average reactor coolant temperature or a low steam pressure. This is restrictive to the point that an automatic closure signal will be generated only in the the case of a very large steam-line break. Thus the MSIV closure action is left to the operator.

(7) The presence of flow restrictors in the steam lines reduces the cooling effect of a large steam-line break.

(8) A safety injection actuation signal (SIAS) will cause the main feed isolation valves (MFIVs) to close and the main feedwater (MFW) pumps to trip. Thus, following a SIAS, the probability of continued overfeed of the SGs is small.

(9) A SG high-level indication will result in the trip of the MFW pumps. This limits the potential for a prolonged overfeed of the SGs.

8.2.2. Results of HBR-2 Overcooling Sequence Analysis

The accident (overcooling) sequence analysis for HBR-2 is described in Chapter 3, and the results are summarized in Chapter 6. The significant conclusions are as follows:

(1) Only those LOCA events which lead to rapid depressurization of the primary system were found to result in complete stagnation or very low flow in all three loops; therefore, LOCA events are not important contributors to the PTS risk of HBR-2.

(2) The dominant overcooling sequences for HBR-2 involve the blowdown of multiple SGs due either to multiple STM PORV failures or to steam-line breaks downstream of the MSIVs (includes failures of SDVs) with multiple MSIVs remaining open.

(3) No individual overcooling sequence considered in the HBR-2 study resulted in a TWC frequency > 10^{-7} per reactor year.

(4) Detailed analyses of low-probability overcooling transients, grouped together as "residual" transients, showed that the "residual" risk is less than 5% of the overall PTS risk for HBR-2.

8.2.3. Results of HBR-2 Fracture-Mechanics Analysis

The fracture-mechanics analysis of the HBR-2 pressure vessel, described in Chapter 5, led to the following conclusions:

(1) Because of low concentrations of the copper and nickel contaminants in the actual HBR-2 pressure vessel, the conditional TWC probabilities obtained for the vessel were too low to permit an appropriate illustration of the fracture-mechanics analysis method. In particular, the axial welds in the high-fluence beltline region, which were expected to dominate the contributions to the conditional TWC probabilities, were overshadowed by the contributions from the plate segments. In order to obtain meaningful conditional TWC probabilities for the identified HBR-2 overcooling sequences, additional calculations were performed for a hypothetical HBR pressure vessel (designated as HBR-HYPO) for which $RTNDT_0$, the fluence, and the concentrations of copper and nickel were defined to give a higher value of *RTNDT*. For the HBR-HYPO vessel, the axial welds did dominate the contributions to the conditional TWC probabilities.

[Note: $RTNDT_0$ is the zero-fluence value of the nil-ductility reference temperature for the region of interest. *RTNDT*, the nil-ductility reference temperature following the material's exposure to radiation, is the independent variable used in the fracture-mechanics analysis and is defined as $RTNDT_0$ plus $\Delta RTNDT$, where $\Delta RTNDT$ is the increase due to the radiation damage.]

(2) With *RTNDT* used as the independent variable in the HBR-2 fracture-mechanics analysis,* it was anticipated that the HBR-1 results could be applied to other reactors having the same *RTNDT* value (but different values of the other variables). It was found, however, that in such applications, significant errors could be introduced (see Appendix G). On the other hand, the results can be applied in performing parametric and preliminary types of analyses for which reasonable inaccuracies can be tolerated.

(3) It was necessary to calculate conditional TWC probabilities as low as 1.0×10^{-10} to properly evaluate some of the high-frequency mild transients. However, for most of the transients, values no lower than 1×10^{-7} were required and these were obtained with reasonable accuracy.

*In the analyses for Oconee Unit 1 and Calvert Cliffs Unit 1, the copper and nickel concentrations, the neutron fluence, and $RTNDT_0$ were all entered as independent variables in the fracture-mechanics calculations.

(4) The conditional TWC probability is insensitive to the heat transfer coefficient over the range assumed in the analysis. It is also insensitive to the crack-arrest fracture-toughness value, K_{Ia}, of the material.

(5) Annealing the pressure vessel could significantly reduce the PTS risk, but cost and uncertainty regarding technical feasibility would probably render this as a last-resort fix to the PTS problem.

(6) The inclusion of warm prestressing (WPS) in the fracture-mechanics analysis would reduce the conditional TWC probability several orders of magnitudes for many, but not all, of the potential overcooling transients. However, because of concerns over the applicability of warm prestressing under certain transient conditions, it was not included in the analysis.

(7) In the analyses performed for several transients, a through-the-wall crack did not occur until near the end of the 2-hr analysis period. Thus, if the duration of the transient were shortened by operator-mitigating actions or for some other reason, the PTS risk would be decreased substantially. On the other hand, prolonging the event beyond 2 hr could in many instances result in substantial increases in the PTS risk for the specific sequences.

8.2.4. Results of HBR-2 Uncertainty and Sensitivity Analyses

The significant conclusions of the HBR-2 uncertainty and sensitivity analyses, described in Chapter 7, are as follows:

(1) The uncertainty in the total PTS risk calculated for HBR-2 is dominated by the large uncertainty in the flaw density assumed for the reactor vessel. This large uncertainty was selected owing to lack of specific knowledge about the flaw density appropriate for the particular vessel. Information specific to the reactor vessel in question should allow more precise estimates to be used for plant-specific studies performed in the future.

(2) Other fracture-mechanics parameters which contributed to the uncertainty, although in a secondary manner, were $RTNDT_0$ and $RTNDT$.

(3) For the classes of overcooling transients seen in the HBR-2 study, the uncertainty in the temperature in the pressure vessel downcomer region was the only thermal-hydraulic uncertainty of importance.

(4) Physical constraints (high-pressure injection temperature, secondary system temperature, etc.) limited the minimum temperature and maximum pressure and resulted in skewed distributions for uncertainty in these input parameters.

(5) The nonlinearity of the fracture-mechanics model requires that a significant amount of effort be expended to obtain an interpolating function over the range of fracture-mechanics model input variable space required for modeling PTS uncertainty or sensitivity. Quadratic response surfaces appear to have been successfully used in this study.

(6) Owing to the nonlinearity of the results to the input data, large shifts in the mean value of the conditional TWC probability can be expected when random variables are included as input for the fracture-mechanics model. In this study, a mean shift of approximately a factor of 550 was observed. On the other hand, the shift in the median of the distribution was only about 50%.

(7) The sensitivity analysis revealed two operator actions which would be considered very important with respect to the PTS risk of HBR-2. The first is the closure of the MSIVs following a small or medium-sized steam-line break (includes SDV failures) downstream of the MSIVs. The second involves the isolation of AFW to low-pressure SGs following a steam-line break.

8.2.5. General Statements Regarding Analysis Assumptions

Several assumptions were made for the PTS analysis of HBR-2 which could influence the results. These assumptions are as follows:

(1) No external events (such as fires, floods, seismic events or sabotage occurrences) and no operator actions not covered by the procedures were considered. The impact of external events (with the exception of floods) is expected to be small. The general effect of potential operator actions not covered by procedures could not be estimated within the scope of this program.

(2) In order to get low temperatures in the downcomer region of the vessel during the analysis, it was necessary to assume that multiple equipment failures occurred, which implied low-frequency events.

(3) Use of the NRC-specified infinite time decay heat curve is a nonconservative assumption. This fact was accounted for in determining the uncertainty in the temperature and pressure for each overcooling sequence considered.

8.3. Areas in PTS Analysis Technique Requiring Further Study and Development

As noted above, the PTS analysis for HBR-2, together with the analyses performed for Oconee Unit 1 and Calvert Cliffs Unit 1, have uncovered areas in the evaluation technique which need further study and development. Specific recommendations for improvements are as follows:

(1) Better information on the flaw density (both on the expected value and the distribution) would greatly reduce the uncertainty in a PTS analysis such as that described in this report. Variations in this parameter can change the calculated conditional TWC probabilities by orders of magnitude.

(2) From a practical point of view, many of the calculated values of the conditional TWC probabilities are so low as to be beyond the present capability of the OCA-P fracture-mechanics code. In this regard, the inclusion of importance sampling techniques in OCA-P would be beneficial.

(3) Flooding of the external reactor vessel has not yet been addressed in sufficient detail to determine whether it represents a potential PTS problem. Such studies should be performed to allow a judgement to be made.*

(4) A better estimate of the decay-heat curve applicable to specific scenarios should be identified in order to avoid nonconservative values of conditional TWC crack probabilities.

(5) The effect of the 2-hr cutoff assumption for the overcooling transients merits further investigation in light of the fact that many of the through-the-wall cracks occurred near the end of the 2-hr period. Shorter or longer sequence time periods could have large effects on the overall PTS risk.

8.4. Summary

This report describes a thorough study of the effect of various overcooling transients on the reactor pressure vessel of H. B. Robinson Unit 2. Much of what is included here has been known for some time by various technical specialists in their fields. However, by integrating the disciplines of probabilistic risk analysis, thermal-hydraulics analysis, and fracture-mechanics analysis, as well as adopting a common technique for assessing uncertainties and sensitivities across these disciplines, a clearer understanding of the total aspect of the PTS problem has resulted. In particular, the uncertainty analysis, although far from perfect, presents an attempt to rigorously adopt a consistent and mathematically sound analysis of the problem. Such an analysis should be a requisite for any future PTS study performed by the NRC or a utility.

*Preliminary studies performed at the time this report was published indicated that flooding of the external reactor vessel was not an important PTS concern for HBR Unit 2.

NUREG/CR-4183
Volume 1
ORNL/TM-9567/V1
Distribution Category RG

INTERNAL DISTRIBUTION

1. L. S. Abbott
2. D. G. Ball
3. S. Ball
4. B. R. Bass
5. T. J. Burns
6. D. G. Cacuci
7. R. D. Cheverton
8. J. S. Crowell
9. D. M. Eissenberg
10. G. F. Flanagan
11. F. C. Maienschein
12. A. P. Malinauskas
13. F. R. Mynatt
14. R. T. Santoro
15. D. L. Selby
16. H. T. Trammell
17. J. D. White
18. G. D. Whitman
19. A. Zucker
20. P. W. Dickson, Jr. (Consultant)
21. G. H. Golub (Consultant)
22. D. Steiner (Consultant)
23. Central Research Library
24. Y-12 Document Ref. Section
25. Laboratory Records ORNL, RC
26. ORNL Patent Office

27–29. EP&MD Reports Office

EXTERNAL DISTRIBUTION

30. Office of the Assistant Manager for Energy Research and Development, DOE-ORO, Oak Ridge, TN 37830.
31. B. Chexal, Electric Power Research Institute, 3412 Hillview Ave., P.O. Box 10412, Palo Alto, CA 94303.
32. S. Rosen, Institute of Nuclear Power Operations, 1820 Water Place, Atlanta, GA 30339.
33. S. M. Mirsky, Baltimore Gas & Electric Company, P.O. Box 1475, Baltimore, MD 21203.
34. J. Phillips, Corporate Nuclear Safety, Carolina Power and Light Co., Fayettville Street Mall, Raleigh, NC 27602
35. C. D. Fletcher, EG&G Idaho, Inc., P.O. Box 1625, Idaho Falls, ID 83415.
36. C. B. Davis, EG&G Idaho, Inc., P.O. Box 1625, Idaho Falls, ID 83415.
37. L. Pedersen, Pacific Northwest Laboratory, Battelle Bldg., Richland, WA 99352.
38. B. Boyack, Los Alamos National Laboratory, P.O. Box 1663, Los Alamos, MN 87545.
39. P. Saha, Brookhaven National Laboratory, Upton, NY 11973.
40. T. G. Theofanous, University of California, Department of Nuclear and Chemical Engineering, Santa Barbara, CA 93106.

41–42. R. Oliver, Corporate Nuclear Safety, Carolina Power and Light Co., Fayettville Street Mall, Raleigh, NC 27602.

43. P. Guill, Duke Power Company, P.O. Box 33189, Charlotte, NC 28242.
44. D. Peck, Combustion Engineering Inc., 1000 Prospect Hill Rd., Windsor, CT 06095.
45. J. W. Minarick, Science Applications International Corporation, Jackson Plaza Tower, 800 Oak Ridge Turnpike, Oak Ridge, TN 37830.

U.S. Nuclear Regulatory Commission, Washington, D.C. 20555:

46. C. E. Johnson
47. G. Requa
48. J. N. Reyes
49. M. Vagins
50. R. H. Woods

51–52. Technical Information Center

53–302. Given distribution as shown in NRC Category RG, Systems and Reliability Reports.

NOTICE

When you no longer need this report, please return it to D. L. Selby, Engineering Physics and Mathematics Division, Bldg. 6025, MS 18W, Oak Ridge National Laboratory, P. O. Box X, Oak Ridge, Tennessee 37831. Thank you.

NRC FORM 335 (2-84) NRCM 1102, 3201, 3202

U.S. NUCLEAR REGULATORY COMMISSION

BIBLIOGRAPHIC DATA SHEET

SEE INSTRUCTIONS ON THE REVERSE

1. REPORT NUMBER (Assigned by TIDC, add Vol. No., if any)

NUREG/CR-4183
Volume 1
ORNL/TM-9567/V1

2. TITLE AND SUBTITLE

Pressurized Thermal Shock Evaluation of the H. B. Robinson Unit 2 Nuclear Power Plant

3. LEAVE BLANK

4. DATE REPORT COMPLETED

MONTH	YEAR
March	1985

5. AUTHOR(S)

D. G. Ball, R. D. Cheverton, G. F. Flanagan, D. L. Selby, P. N. Austin, D. P. Bozarth, D. E. Korns, C. L. Mason, A. F. McBride, J. W. Minarick, L. B. LaMonica, R. Olson, G. L. Zigler, C. B. Davis, C. D. Fletcher, D. M. Ogden, P. Gherson, K. Iyer, H. P. Nourbakhsh, T. G. Theofanous, P. Humphreys, L. D. Phillips, and D. Embrey

6. DATE REPORT ISSUED

MONTH	YEAR
September	1985

7. PERFORMING ORGANIZATION NAME AND MAILING ADDRESS (Include Zip Code)

Oak Ridge National Laboratory
P. O. Box X
Oak Ridge, TN 37830

8. PROJECT/TASK/WORK UNIT NUMBER

9. FIN OR GRANT NUMBER

B0468

10. SPONSORING ORGANIZATION NAME AND MAILING ADDRESS (Include Zip Code)

Division of Risk Analysis and Operations,
Office of Nuclear Regulatory Research,
U.S. Nuclear Regulatory Commission,
Washington, DC 20555

11a. TYPE OF REPORT

Final

b. PERIOD COVERED (Inclusive dates)

3/1/84 - 9/1/85

12. SUPPLEMENTARY NOTES

13. ABSTRACT (200 words or less)

An evaluation of the risk of pressurized thermal shock (PTS) resulting in a through-the-wall crack in a reactor pressure vessel was performed for the H. B. Robinson Unit 2 nuclear power plant. The information presented in this report covers one of three plant-specific studies performed for NRC. The other two studies, for Oconee Unit 1 and Calvert Cliffs Unit 1, are documented in NUREG/CR-3770 and NUREG/CR-4022, respectively. The specific objectives of the H. B. Robinson study were (1) to further refine the methodology for evaluating the risk of PTS, (2) to provide a best estimate of the frequency of a through-the-wall crack for the H. B. Robinson Unit 2 vessel, (3) to determine the dominant PTS sequences for the unit, and (4) to evaluate the effectiveness of potential corrective measures. The examination of tens of thousands of transients indicated that PTS was not an important core melt initiator for H. B. Robinson Unit 2. The dominant risk sequences were determined to be failure of steam relief valves to close on multiple steam lines.

14. DOCUMENT ANALYSIS - a. KEYWORDS/DESCRIPTORS

Overcooling, PTS, Risk, PRA, Uncertainties, H. B. Robinson, Westinghouse, Probabilistic, Fracture-mechanics

b. IDENTIFIERS/OPEN-ENDED TERMS

RELAP5, OCA-P, REMIX

15. AVAILABILITY STATEMENT

Unlimited

16. SECURITY CLASSIFICATION

(This page)
Unclassified

(This report)
Unclassified

17. NUMBER OF PAGES

385

18. PRICE