OAK RIDGE NATIONAL LABORATORY LIBRARY

3 4456 0003584 2

ornl

ORNL/TM-9815

OAK RIDGE NATIONAL LABORATORY

MARTIN MARIETTA

Thermal Conductivities of Wilsonville Solvent and Wilsonville Solvent/Illinois No. 6 Coal Slurry

J. E. Mrochek
J. H. Wilson
J. K. Johnson

OAK RIDGE NATIONAL LABORATORY
CENTRAL RESEARCH LIBRARY
CIRCULATION SECTION
4500N ROOM 175
LIBRARY LOAN COPY
DO NOT TRANSFER TO ANOTHER PERSON
If you wish someone else to see this report, send in name with report and the library will arrange a loan.
UCN-7969 (3 9-77)

Fossil Energy Program

OPERATED BY
MARTIN MARIETTA ENERGY SYSTEMS, INC.
FOR THE UNITED STATES
DEPARTMENT OF ENERGY

Printed in the United States of America. Available from
National Technical Information Service
U.S. Department of Commerce
5285 Port Royal Road, Springfield, Virginia 22161
NTIS price codes—Printed Copy: A04; Microfiche A01

This report was prepared as an account of work sponsored by an agency of the United States Government. Neither the United States Government nor any agency thereof, nor any of their employees, makes any warranty, express or implied, or assumes any legal liability or responsibility for the accuracy, completeness, or usefulness of any information, apparatus, product, or process disclosed, or represents that its use would not infringe privately owned rights. Reference herein to any specific commercial product, process, or service by trade name, trademark, manufacturer, or otherwise, does not necessarily constitute or imply its endorsement, recommendation, or favoring by the United States Government or any agency thereof. The views and opinions of authors expressed herein do not necessarily state or reflect those of the United States Government or any agency thereof.

ORNL/TM-9815

Chemical Technology Division

THERMAL CONDUCTIVITIES OF WILSONVILLE SOLVENT AND WILSONVILLE SOLVENT/ILLINOIS NO. 6 COAL SLURRY

J. E. Mrochek
J. H. Wilson
J. K. Johnson

Date Issued - December 1985

Prepared by the
OAK RIDGE NATIONAL LABORATORY
Oak Ridge, Tennessee 37831
operated by
MARTIN MARIETTA ENERGY SYSTEMS, INC.
for the
U.S. DEPARTMENT OF ENERGY
under Contract No. DE-AC05-84OR21400

OAK RIDGE NATIONAL LABORATORY LIBRARY
3 4456 0003584 2

ABSTRACT

There is a paucity of experimental and literature data on the thermal conductivities of coal liquids and slurries of coal and liquids derived from coal at elevated temperatures and pressures. The few literature data that do exist generally are questionable because they were obtained under static conditions, whereby the slurries have been subjected to elevated temperatures for extended time periods in an autoclave during the measurement process. This report describes instrumentation and techniques that, when used in conjunction with a unique bench-scale flow system for coal liquids, enabled thermal conductivity measurements of fresh, slurried coal-solvent mixtures under more or less dynamic flow conditions.

The transient hot-wire technique was selected as the method of choice, and a high-temperature, high-pressure cell, rated for temperatures to 850 K and pressures to 30 MPa (4366 psig), was fabricated from type 347 stainless steel. The cell, constructed of two identical manifolds joined by a length of pipe (34.9-mm OD x 19.7-mm ID), contained a platinum hot wire gauge (40 SWG, 0.076-mm diam) ~29 cm in length. The measurement system consisted of a commercially available, precision dc current source (programmable and capable of current output to 164 mA) and a custom-built, switching/voltage amplification network with a digital oscilloscope for data acquisition. Measurements of the voltage drop across the hot-wire gauge (4096 data points) were transferred to a minicomputer for analysis and long-term storage.

Measurements performed at the laboratory bench with this system on toluene at temperatures to 348 K differed by <2.3% from smoothed, interpolated literature data. A few measurements on toluene with the system

installed in the bench-scale Coal Liquids Flow System (CLFS) showed larger deviations from the literature data and somewhat lower precision (mean C.V. 3% compared to 1.1%).

Thermal conductivities were measured on a Wilsonville solvent and a slurry prepared from this solvent and Illinois No. 6 coal over a temperature range of 295 to 505 K. Thermal conductivities for both the solvent and the slurry decreased with increasing temperatures, similar to the trend showed by toluene. The solvent decreased from 1.23 to 1.02 mW cm^{-1} K^{-1} over the temperature range 296 to 438 K, while the slurry decreased from 1.51 to 1.02 mW cm^{-1} K^{-1} over the range 295 to 505 K. Applying the Rayleigh equation (used to estimate the thermal conductivity of heterogeneous mixtures of monodispersed spheres in a liquid) to density-vs-temperature data for slurries of this same solvent and coal resulted in computed thermal conductivities which fell within, or slightly below, the range of values observed for a variety of coals by direct measurements on lumps of coal. This was an indication of internal self-consistency for these data.

Measurements were attempted at temperatures >505 K; however, resistances measured from the hot-wire gauge to the body of the cell were too low for them to be completed. We were unable, in the time remaining on the project, to determine if carbon bridging across the Macor seals or increased conductivity of the slurry was the cause of the difficulty. If increased conductivity at higher temperatures is causing the problem, it may preclude use of the transient hot-wire method for slurries at temperatures >500 K.

GLOSSARY OF TERMS

a cross-sectional radius of hot-wire gauge

b radius of cell

C_p specific heat at constant pressure

q total power input to hot wire, W

d fluid thickness in cell

G_r Grashof number

g acceleration due to gravity

I current

k thermal conductivity

L length of hot-wire gauge

P_r Prandtl number

R_a Rayleigh number

T temperature, K

Greek Symbols

α temperature coefficient of resistance change

α' thermal diffusivity

β thermal expansion coefficient

γ Euler's constant, 0.577...

γ' exp γ

ρ density

η viscosity

ACKNOWLEDGMENT

Many people contributed to the work described in this report and are deserving of acknowledgment. G. E. Oswald, E. L. Youngblood, and H-W Hsu (University of Tennessee) were involved in the initial design and fabrication of equipment. W. H. Andrews, Jr., of the Instrumentation and Controls Division designed and built the electronic measurement system. T. L. Sams, D. D. Lee, R. G. Spence, and D. A. McWhirter assisted in the dynamic measurements of coal-related liquids on the Coal Liquids Flow System.

CONTENTS

Page

ABSTRACT iii

GLOSSARY OF TERMS v

ACKNOWLEDGMENT vii

1. INTRODUCTION 1

2. BACKGROUND 2
   2.1 METHOD SELECTION AND JUSTIFICATION 3
      2.1.1 Mathematical Modeling of the Transient Hot-Wire Device 4
   2.2 INSTRUMENTATION 10
      2.2.1 Amplification Circuitry Module 12
      2.2.2 Power Source 14
      2.2.3 Data Acquisition 14
      2.2.4 Cell 15
         2.2.4.1 Flow Systems 15
         2.2.4.2 Cell Temperature Control 20

3. EXPERIMENTAL PROCEDURES 21

4. DATA ANALYSIS 22

5. RESULTS 27

6. DISCUSSION OF RESULTS 30
   6.1 MEASUREMENTS OF TOLUENE 30
   6.2 MEASUREMENTS ON SOLVENTS AND SLURRIES 33
   6.3 CALCULATED THERMAL CONDUCTIVITIES FOR COAL 35

7. CONCLUSIONS 39

8. RECOMMENDATIONS 40

9. REFERENCES 41

10. APPENDIX 43

ORNL/TM-9815

THERMAL CONDUCTIVITIES OF WILSONVILLE SOLVENT AND WILSONVILLE SOLVENT/ILLINOIS NO. 6 COAL SLURRY

J. E. Mrochek
J. H. Wilson
J. K. Johnson

1. INTRODUCTION

In an attempt to develop advanced technologies for the conversion of coal into a clean-burning product, the U.S. Department of Energy (DOE) has contributed funding for several synthetic fuel projects to demonstrate the technical, environmental, and economic feasibility of converting high-sulfur coals into solid and liquid fuels. Numerous process development units (PDUs) and at least three pilot plants have been constructed and operated for this purpose. Numerous heat exchangers and a relatively large preheater containing miles of expensive tubing are generally present as an integral part of the design for any demonstration (or larger) coal liquefaction plant. Proper, cost-effective design of these components requires accurate measurement of the thermal conductivities of the process liquids and solvent-coal slurries under process conditions of temperature and pressure.

The objectives of this work were to develop, test, and install in the Coal Liquids Flow System (CLFS) an instrument capable of measuring the thermal conductivity of coal-solvent slurries under typical process conditions present in SRC and H-Coal liquefaction processes. This capability would permit freshly prepared slurries to be used at each temperature, enabling measurements to be made under conditions similar to those

in the actual process and overcoming the thermal aging problem associated with batch processing in an autoclave.

An instrument was designed and constructed at the Oak Ridge National Laboratory (ORNL) for the purpose of measuring the thermal conductivities of coal liquids and coal slurries at simulated process conditions. This instrument was tested with toluene and Wilsonville solvent at relatively low temperatures in a static mode of operation. It was then installed in the CLFS to determine the thermal conductivities of coal-derived materials at high pressures [up to 13.9 MPa (2000 psig)] and high temperatures [to 700 K (800°F)].

2. BACKGROUND

Measured thermal conductivities of coal liquids or solvent-coal mixtures are virtually absent from the literature. The only data published on slurries are those of Gray[1] for SRC-II solvent-coal mixtures to temperatures of ~500 K (440°F) and those of Droege et al.[2] for Wilsonville SRC-I solvents mixed with Kentucky No. 9 coal to ~700 K (800°F). These same authors have reported thermal conductivity values for solvents from the same processes, and more recently, Perkins, Sloan, and Graboski[3] have presented data on SRC-I and COED solvents to ~490 K (422°F). The unifying factor among work from these three groups is the use of the transient hot-wire technique on batch samples contained in an autoclave. An inherent problem with batch samples in an autoclave involves their subjection to a particular thermal aging history during heatup, which can produce chemical reactions that may affect their stability and may also alter important physical properties. This is particularly a problem with coal slurries since the occurrence of a "gelation" region is well known.[4]

2.1 METHOD SELECTION AND JUSTIFICATION

The thermal conductivity, k, of a substance is defined by

$$d\Theta/dt = -kA\ dT/dx, \tag{1}$$

where $d\Theta$ is heat transmitted in time dt along a temperature gradient (dT/dx) perpendicular to an area A. Tait and Hills[5] have classified apparatus for the determination of thermal conductivities of liquids into two broad classes — steady-state and transient methods.

A primary example of steady-state methodology is the guarded horizontal parallel-plate technique as described by Fritz and Poltz[6] and employed by Poltz and Jugel[7] to measure the thermal conductivities of toluene and five other organic fluids. Two disadvantages of this method are that smooth (±0.3 μm), planar plates are required, and radiation has significant effects on the measurements. Convection is also a major problem, which may be minimized by decreasing the interplate spacing; in this way, we ultimately approach the measurement of thin liquid films. The tendency of coal particulates to settle in thin films and the effect of elevated temperatures on interelectrode spacing and dimensional stability of the apparatus preclude consideration of such techniques for measuring the thermal conductivities of coal slurries under process conditions.

Non-steady-state methods are characterized by the measurement of temperature as a function of time after imparting a known pulse (small) of heat to the system. The source of heat is restricted to one displaying low heat capacity, and fine wires ("hot wires") are generally employed. The dimensions of the "hot wire" (small radius, approaching zero; length approaching infinity) tend to reduce radiation effects. Extrapolation backward in time minimizes errors due to convection, and

the acquisition of data over short periods of time minimizes variations arising from the temperature dependence of thermal conductivity. The use of short times is attractive for measurements on coal slurries since a minimum particulate settling should be observed. The transient hot-wire method was selected for this experimentation because of this advantage over steady-state methods.

The transient hot-wire technique normally employs a vertical, cylindrical symmetry in which the wire serves as both the heat source and the thermometer. Platinum is usually the material of choice because of high thermal conductivity and a nearly linear relationship between resistance and temperature over a broad temperature range. The wire is pulsed electrically to introduce heat into the liquid cylinder. Heat generated by the low power pulse (1 to 8 mW/cm) diffuses radially outward from the wire into the surrounding liquid, generating a temperature gradient that is a function of the fluid's thermal conductivity.

2.1.1 Mathematical Modeling of the Transient Hot-Wire Device

Convection should be absent in any experimental determination of fluid thermal conductivity; heat should only be transferred by pure conduction. The onset of natural convection actually sets a limit on the duration of the measurement since absolute corrections for its adverse effects cannot be computed.

The non-steady-state hot-wire cell is modeled mathematically as an infinitely long line source immersed in an unbounded isotropic medium. The resulting Fourier conduction equation for the fluid, assuming temperature-independent properties of the medium, is

$$\rho C_p \frac{\partial T}{\partial t} = \lambda \left(\frac{\partial^2 T}{\partial r^2} + \frac{1}{r} \frac{\partial T}{\partial r} \right) . \qquad (2)$$

The medium, initially at uniform temperature, is subjected to constant power per unit length (q/L) originating from the line source at time = 0 and r = 0. The temperature at time t referred to the initial value (at constant pressure) may be computed as[8]

$$T(r,t) = -\frac{q/L}{4\Pi\lambda}\left\{E_i\left(-\frac{r^2}{4\alpha' t}\right)\right\} \quad . \tag{3}$$

The exponential integral function $E_i(-x)$ can be approximated as[9]

$$\begin{aligned} -E_i(-x) &= \int_x^\infty \frac{e^{-u}}{u}\,du \\ &= -\gamma - \ln x - \sum_{n=1}^{\infty} \frac{(-1)^n x^n}{n\,n\,!} \\ &\qquad \left(\left|\arg x\right| < \Pi\right) \quad . \end{aligned} \tag{4}$$

Therefore, from Eq. (3), the temperature at some specified radial distance r becomes (after substituting $\frac{r^2}{4\alpha' t}$ for x),

$$\begin{aligned} T\,(r,t) &= \frac{q/L}{4\Pi\lambda}\left[\ln\frac{4\alpha' t}{r^2} - \gamma + \frac{r^2}{4\alpha' t} - \ldots\right] \\ &= \frac{q/L}{4\Pi\lambda}\left[\ln t + \ln\frac{4\alpha'}{r^2\gamma'} + \frac{r^2}{4\alpha' t} - \ldots\right] \quad , \end{aligned} \tag{5}$$

where

γ' = exp γ and γ = Euler's constant (= 0.577...);

α' = thermal diffusivity, $k/(\rho_\ell\, C_{p_\ell})$ (k = initial estimate of thermal conductivity);

ρ_ℓ = density of the fluid;

C_{p_ℓ} = heat capacity of the fluid.

The temperature of the hot wire may be approximated (neglecting any interfacial resistance between the wire and the medium) by substituting $r = a$, the radius of the hot wire, into Eq. (5) and assuming that $a^2/4\alpha' t$ is negligibly small in the time range t_1 to t_2. Thus, we may describe the temperature rise of the hot-wire gauge as

$$T(a,t_2) - T(a,t_1) \cong \frac{q/L}{4\Pi\lambda} \ln \frac{t_2}{t_1} \quad . \tag{6}$$

This line-source solution expresses the temperature rise of the line source as a linear function of ln(time). Thus, thermal conductivity may be estimated as

$$\lambda = \frac{q}{4\Pi L}\left(\frac{dT}{d \ln t}\right)^{-1} \quad . \tag{7}$$

Since the hot wire serves as both a heat source and a resistive thermometer, the transient temperature behavior may be related to the change in resistance by defining the temperature coefficient of resistance as

$$\alpha = \frac{1}{R_o} \frac{dR}{dT} \quad , \tag{8}$$

where

R_o = resistance at some initial temperature (e.g., 0°C);

α = temperature coefficient of resistance for the platinum hot wire.

For a hot-wire cell to which <u>constant</u> current is applied, Ohm's law leads to

$$I\ dR = dV \quad ,$$

with the power (q) applied to the hot wire expressed as

$$q = VI = I^2R \quad , \tag{9}$$

where V is the voltage drop across the hot-wire gauge.

Now, Eq. (7) may be rewritten as

$$\lambda = \frac{I^3R^2\alpha}{4\Pi L}\left(\frac{dV}{d\ \ln\ t}\right)^{-1} . \tag{10a}$$

Because α may not be a constant, a more convenient form of Eq. (10a) for the high temperatures to be employed in the measurement of thermal conductivities for coal slurries is

$$\lambda = \frac{I^3R_i\ \frac{dR}{dT}}{4\Pi L}\left(\frac{dV}{d\ \ln\ t}\right)^{-1} \quad , \tag{10b}$$

where R_i is the resistance of the hot-wire gauge measured at the initial temperature conditions for the measurement, and $\frac{dR}{dT}$ is the slope of the temperature-vs-resistance curve (evaluated at that same temperature) for the hot-wire gauge ($\frac{dR}{dT}$ is approximately constant over small increments in temperature). Thus, thermal conductivity may be estimated from the slope of a <u>linear</u> plot of voltage vs ln(time) for the hot-wire gauge immersed in the medium to be measured, from the known <u>constant</u> current input, and from the initial resistance, length, and slope of the resistance-vs-temperature curve for the platinum hot-wire gauge.

The time for onset of natural convection for a cell with cylindrical geometry was estimated according to McLaughlin.[10] He suggested that the onset of convection is determined by critical values of the product of Prandtl and Grashof numbers known as the Rayleigh number ($R_a = P_r \cdot G_r$). The Prandtl number is a dimensionless measure of the ratio of molecular

diffusivity of momentum to the molecular diffusivity of energy ($P_r = \eta C_p/k$). The Grashof number ($G_r = g\beta\rho^2\Delta T d^3/\eta^2$) is a measure of the relative importance of the buoyancy and viscous forces acting on the fluid. The critical Rayleigh number for concentric cylinders is 1000.[11] This suggests that no convection would be expected provided $R_a < 1000$ for the fluid under investigation in a cell of given geometry. Applying these criteria to toluene at 333 K in the cylindrical hot-wire system indicated the time for onset of convection to be >6 but <6.5 s (see Appendix). This computation is strongly affected by fluid viscosity. If the viscosity of the fluid increases by a factor of 2 (at 333 K, η = 0.38 cp for toluene), all other factors remaining constant, the time of onset of convection would increase to ~9 s. The viscosities for coal liquids and slurries of coal in coal liquids are generally of the order of 1 and 20 to 30 cP, respectively, for temperatures of interest in this work. Thus, since the other parameters do not change appreciably from those of toluene, convective heat flow should not be a problem for measurements under 10 s.

The effect of radiant heat transfer has been examined in the case of poorly absorbing fluids, such as benzene, toluene, nitrobenzene, m-xylene, and carbon tetrachloride. Poltz and Jugel,[7] employing parallel plate geometry to measure thermal conductivity, determined the radiation contribution to show a functional dependence on interplate spacing. Measured thermal conductivities were 5 to 7% too high using their maximum plate spacing (~2 mm). McLaughlin and Pittman[12] eliminated time-dependent errors (including the radiative contribution) by extrapolating back to time = 0 for their experiments on toluene using the hot-wire gauge. (Poltz and Jugel also eliminated the effect by extrapolating to

zero plate spacing.) Of course, these corrections were all made on poorly absorbing fluids. For the case of strongly absorbing fluids, such as those from coal, the radiative contribution will rise at very early times to a constant value; thus, back extrapolation procedures would fail to eliminate it. Poltz and Jugel[7] have shown experimentally that increasing ir absorptivity for liquids reduced the effect of radiative losses and the influence of interplate spacing on thermal conductivity. Thus, errors due to an uncorrected radiative component should be less for coal liquids and slurries than for a poorly absorbing fluid such as toluene. Compared with the total conductive output of the wire, ~3000 J $m^{-2}s^{-1}$ (150 mA current through a 0.076-mm wire, 29 cm in length, having a resistance of 9.2 Ω), radiation (assuming toluene at 60°C) is computed to be <0.1% of the total power output for toluene.[13]

The line-source solution [Eq.(6)] is based upon the assumptions of an infinitely long hot-wire gauge and thus the absence of axial temperature variation. However, the hot-wire gauge, of necessity, must be connected to heavier wires to make electrical connection to it. In practice, these heavier wires (Pt, 24 SWG) will cause a drop in the temperature of the hot-wire gauge near its ends. The maximum heat loss through the ends of the hot-wire gauge was computed for the cell of this study containing toluene at ~350 K. It was found to be 6×10^{-4} W or <0.3% of the total power to the wire gauge (150 mA at 9.2 Ω).[13] This loss is attenuated considerably since the heavy wire leads to the hot-wire gauge were sealed in glass to insulate them from contact with the fluid to be measured.

One major factor that must be considered in the measurement of thermal conductivity by the transient hot-wire method is the finite

diameter of the gauge. It is highly desirable to employ a hot wire of the smallest practicable diameter with a recommended diameter being 0.001 in.[12] It was felt that this diameter was too small to withstand the rigors of high-temperature cycling and the pumping of coal slurries, so a nominal wire diameter of 0.003 in (7.6×10^{-2} mm) was selected. The effects of this finite wire size on measurements of thermal conductivity are discussed more thoroughly in Sect. 4. Summarizing for purposes of this discussion — corrections to the measured temperature of the hot-wire gauge are -1 to -3% for measurement times between 0.5 and 0.2 s on toluene at ambient temperature. These corrections are -0.7 to -1.2% for a coal solvent and -0.4 to -0.43% for a coal slurry, both over the same time frame and at 450 K. Such corrections fall within the limit of experimental error for this apparatus at elevated temperature.

2.2 INSTRUMENTATION

A simple, rugged, easily operated measurement system was desired since the device was ultimately destined to be used to measure thermal conductivities of coal slurries in the near-pilot-plant environment of the CLFS.[14] The system, shown schematically in Fig. 1, consists of a programmable precision dc current source, a switching network, and three high-gain instrumentation amplifiers with precision voltage suppression circuits for removing the large dc component of the signal so that small changes are more readily monitored. One of the amplifier circuits is employed to aid in the adjustment of a ballast resistor to match the resistance of the hot-wire gauge. A second amplifier circuit is utilized to continuously monitor system current across a precision 10-Ω resistor in conjunction with a digital panel meter. The third amplifier circuit

ORNL DWG 84-534

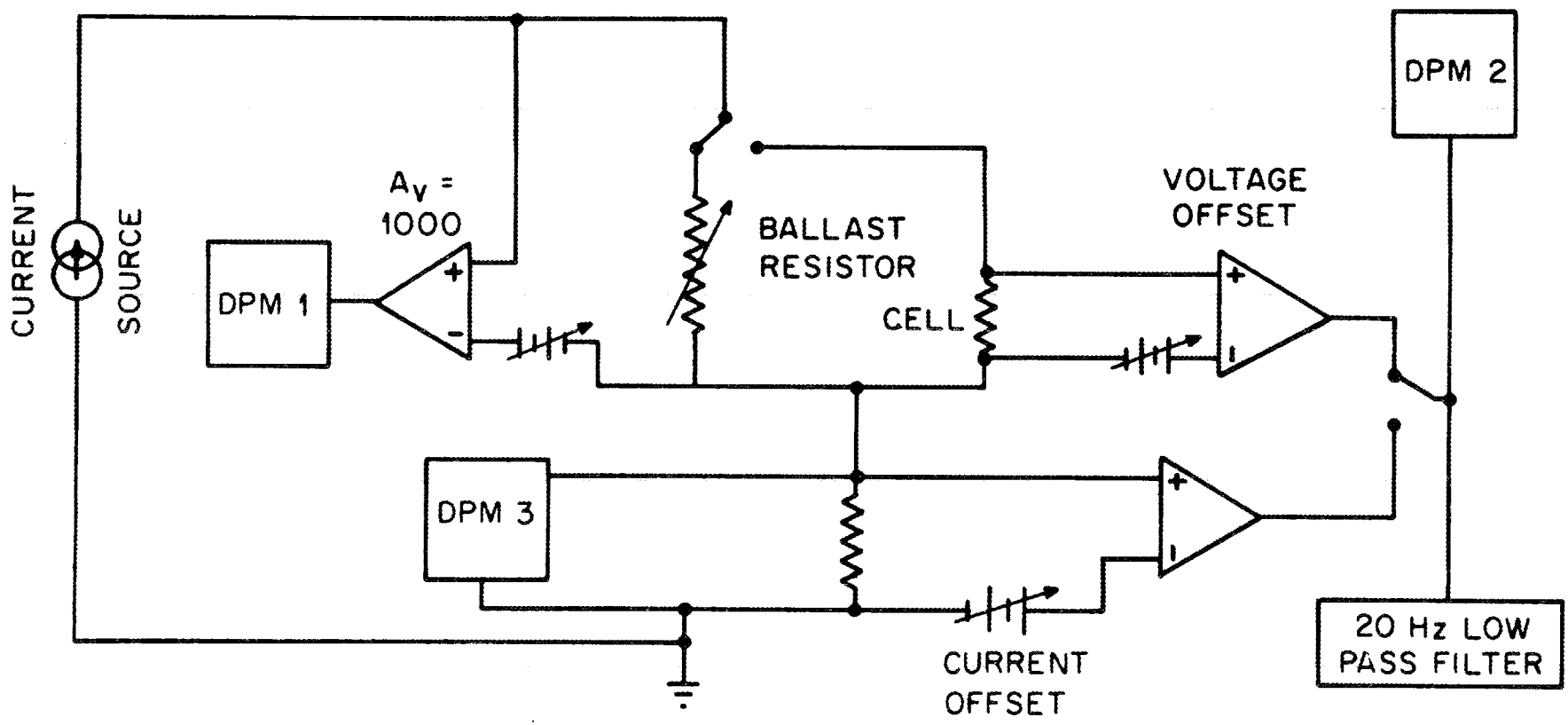

Fig. 1. Schematic diagram of instrumentation for measurement of thermal conductivity.

provides a gain of 1000 to amplify the microvolt drop across the hot-wire gauge into the millivolt range for acquisition and measurement by a digital oscilloscope.

The ballast resistor is provided to minimize the switching transient when the current source is connected to the hot wire. The selected output signal is low-pass filtered at 20 Hz to reduce noise from 60-Hz sources and ripple from the current source. The resulting resolution is 1 μV, referred to the input voltage. Switching transients are damped out within 150 ms after current is applied to the cell.

2.2.1 Amplification Circuitry Module

Three similar amplifier modules are used to acquire the signals of interest, to remove large undesired dc offsets, and to boost the submillivolt signals to levels near 1 V. A simplified schematic of the circuit used is shown in Fig. 2.

A precision "bucking" or zero-suppressing adjustable voltage source is placed in series with the input to allow the large dc offset present in each signal to be nulled. The remaining signal is amplified by a gain of 1000 using a precision instrumentation amplifier, a Burr-Brown Model 3630. This amplifier was chosen because of its low input noise, low drift, and high common-mode noise rejection ratio. In constructing the amplifier circuits, a special solder was used in the signal paths to minimize the possibility of thermally generated voltages introducing errors into the measured signals. Care was taken to eliminate any inadvertent ground paths that could compromise those measurements "floating off of ground" or that could create noise-inducing ground loops. A driven shield is used to guard against noise pickup in the voltage leads to the remotely located filament.

ORNL DWG 84-529

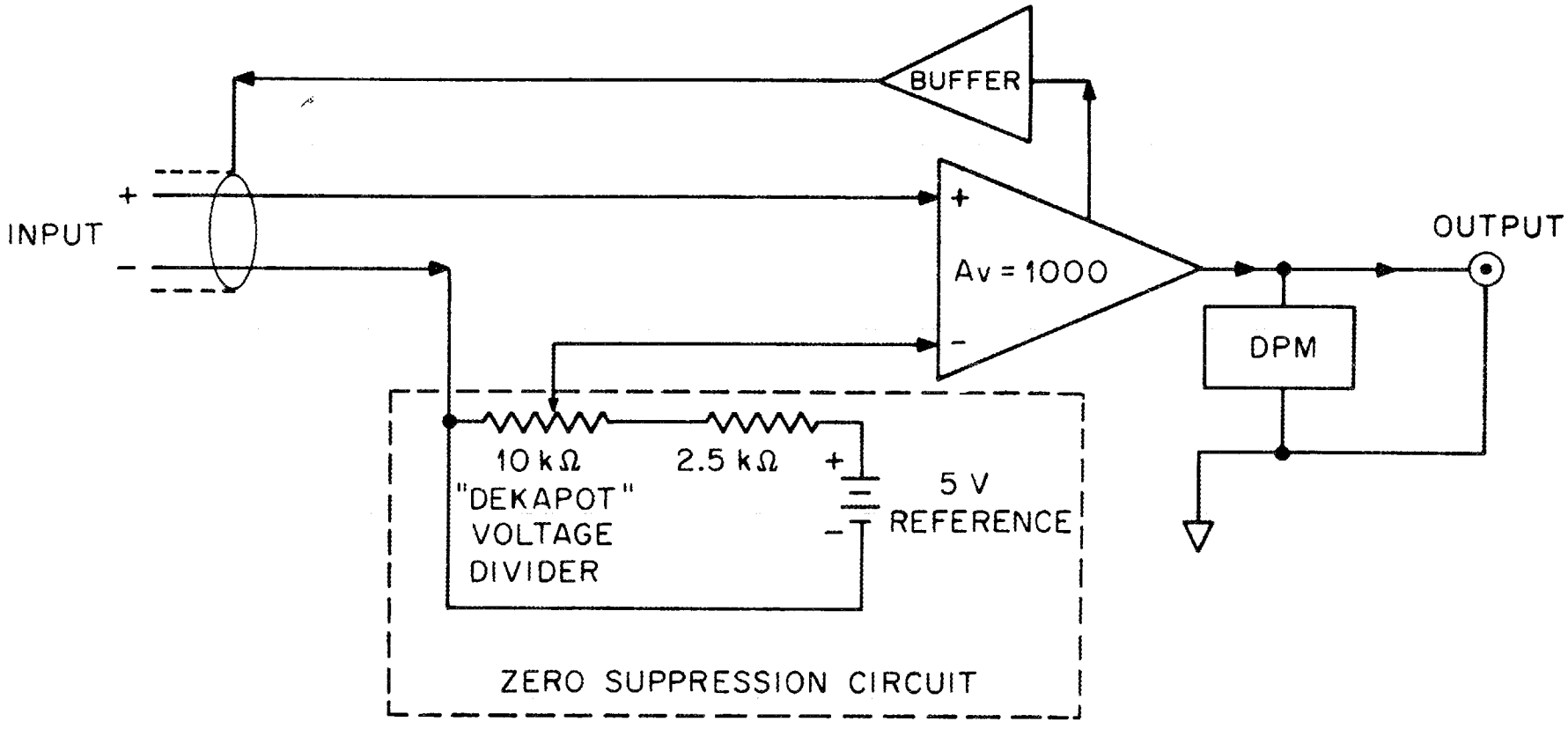

Fig. 2. Simplified diagram of amplifier module.

2.2.2 Power Source

A digital current source (Hewlett-Packard, Model 6140A) equipped with a Pocket Programmer (Model 14533B) was employed as the constant-current source for the system. The source has two current ranges, 0 to 16.3835 mA and 0 to 163.835 mA. Accuracies for the two ranges are 1 μA ± 0.01% and 10 μA ± 0.01% of programmed output, respectively. Calibration demonstrated that all measured values, except that at 50.00 mA (10 μA + 0.02%), were well within the claimed accuracy limitations.

Accurate measurements of the initial resistance of the hot-wire gauge at temperature required the input of a known current in the range of 1 mA. Use of the low range of the power source enabled a programmed input of 1.000 mA as determined by independent measurement. This allowed direct readout of resistance to four or five significant figures on a digital multimeter (Hewlett-Packard Model 3490A).

2.2.3 Data Acquisition

Data are acquired from the amplifier module by means of a digital storage oscilloscope (Nicolet Model 2090-2 equipped with Model 201-2 plug-in unit). Storage capacity of the scope is 4096 words by 12 bits; maximum vertical sensitivity is ±10 mV with an A/D resolution of 12 bits. The scope is equipped with an RS-232C interface (Model 2082), which is utilized to transmit the stored voltage-vs-time data to a digital computer for long-term storage and/or analysis. A FORTRAN-77 program was written to implement the acquisition and storage of the data from the Nicolet oscilloscope. Transfer of 4096 data points to the PDP-11 computer required ~30 s.

2.2.4 Cell

The cell components were fabricated from 347 stainless steel — two identical manifolds (50.8 × 57.2 × 101.6 mm) joined by a length of pipe (34.9-mm OD × 19.7-mm ID) (see Fig. 3). The assembly was rated for pressures and temperatures as high as 30 MPa (4366 psig) and 850 K, respectively. Fluid inlet and outlet openings were located at the extreme ends of the cell to eliminate potential dead volumes where gases might accumulate.

The hot-wire gauge consisted of ~29 cm of platinum wire (40 SWG, 0.076-mm diam), which was brazed or laser-welded on either end to a heavier platinum wire (24 SWG, 0.5 mm) to enable electrical connections to be made to the hot wire. The heavier wire exited the cell through Conax fittings with two Macor™ insulators sandwiched around a crushable lava seal, as illustrated in Fig. 4. The electrical leads inside the cell were insulated from electrical contact with the walls of the Conax fittings by glass encapsulation, as shown in Fig. 4. This encapsulation also served to reduce heat losses from the ends of the hot wire, slowing the onset of convection and preserving the linearity of voltage-vs-ln(time) data [see Eq. (10b)] over longer periods of time.

2.2.4.1 Flow Systems

The cell was tested in two flow systems. Initial tests were performed with toluene that was transferred from a reservoir into the cell via a small (2 mL/min) positive displacement pump. Both the reservoir and the cell were contained in an insulated vessel filled with a 1:1 mixture of ethylene glycol which was maintained at constant temperature by means of a Lauda (model K-2/R) controlled-temperature system.

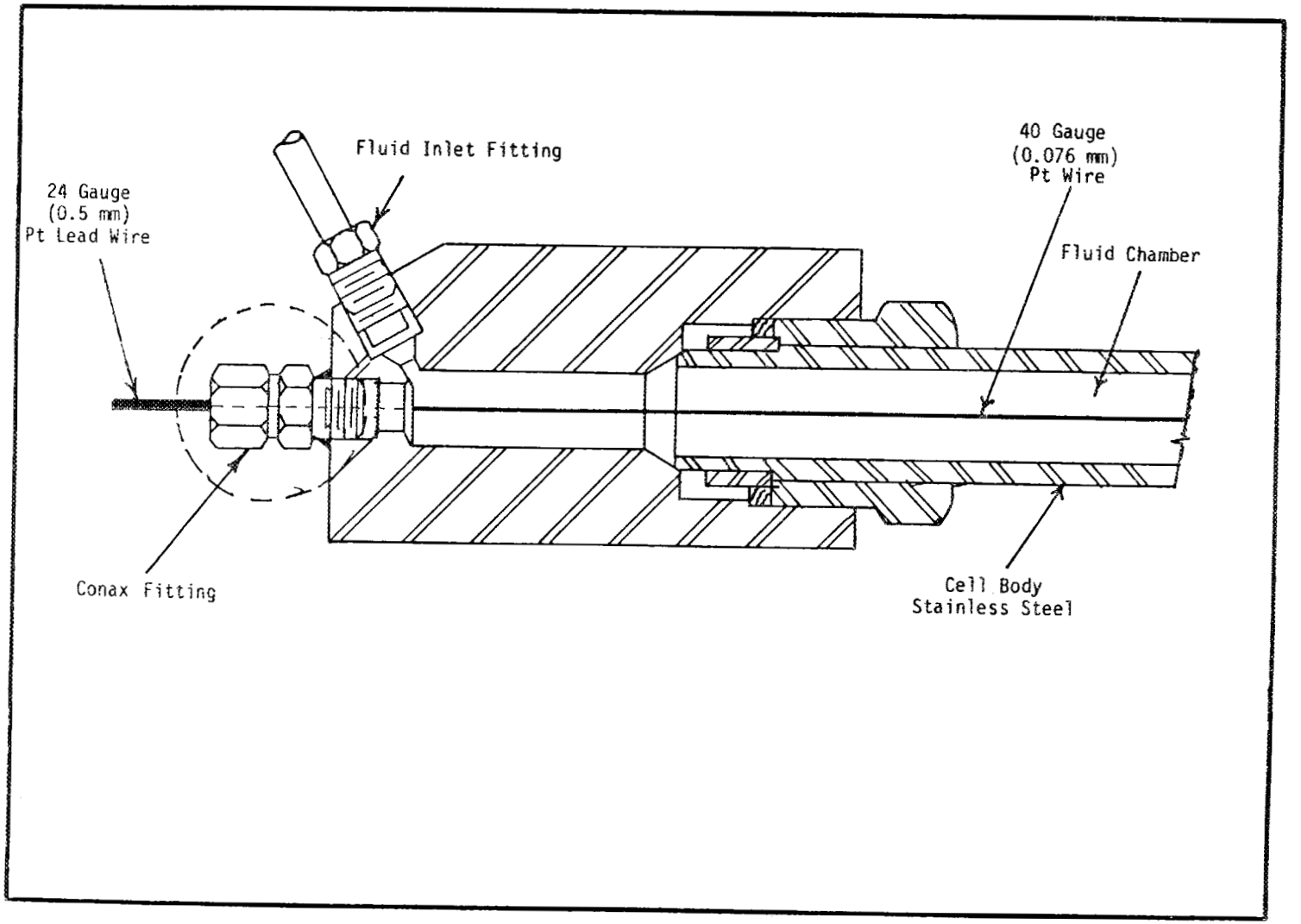

Fig. 3. Cutaway view of high-temperature, high-pressure thermal conductivity cell.

ORNL DWG 81-969

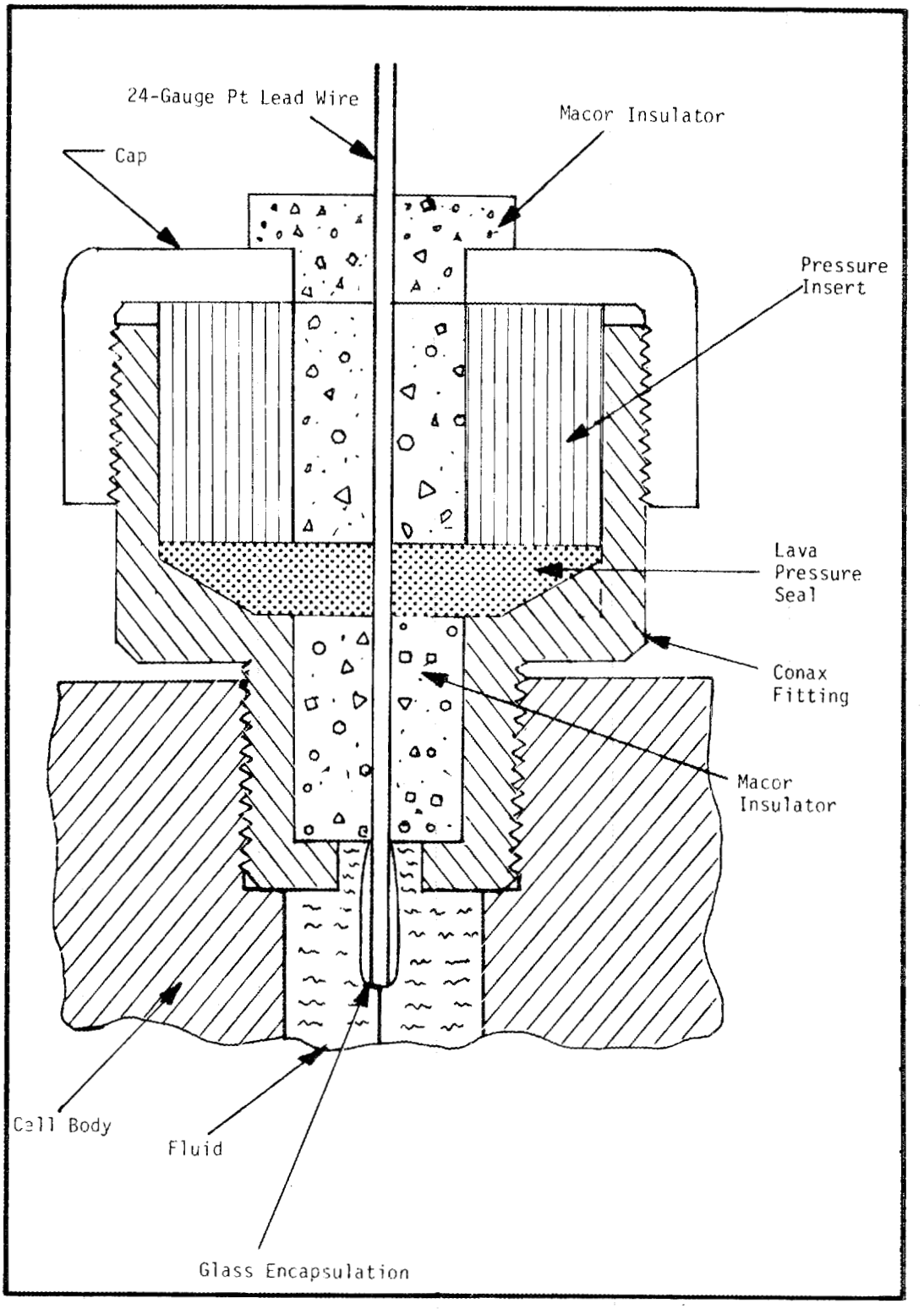

Fig. 4. Installation of platinum wire in Conax fitting.

The high-temperature, high-pressure thermal conductivity cell was principally designed for the CLFS (Fig. 5). This unique system will permit the rheological and other physical properties of reacting coal-solvent slurries to be studied under continuous flow conditions at the temperatures and pressures used in direct coal liquefaction processes.

Coal was slurried with a solvent in the feed tank at ambient temperature and pressure, mixed continuously by an air-driven stirrer, and recirculated through an external loop by a progressive cavity pump (Moyno, Model 3L2 with Viton stator). A slipstream from the slurry recirculation line was pumped via a positive-displacement pump (Bran-Lubbe Model N-K51, high pressure) to the preheater at a maximum rate of 1.2 g/s. The weight of the feed tank was monitored continuously by a National Controls weigh cell with a Donic 420 digital readout connected to an on-line Digital Equipment Corporation minicomputer (DEC PDP 11/34). Thus, continuous measurement of the slurry mass feed rate was possible. The slurry preheater was fabricated from a 12.1-m (40-ft) section of 6.35-mm (1/4-in.)-OD by 2.77-mm (0.109-in.)-ID medium-pressure tubing (Autoclave Engineers) which was electrically heated (maximum heat rate = 22 $kJ/s \cdot m^2$) and insulated.

The high-temperature, high-pressure thermal conductivity cell was connected into the CLFS immediately downstream of the preheater (see Fig. 5) by means of an ORNL-modified three-way valve (Autoclave Engineers) equipped with two air activators. The modified valve differed from the standard valve by the addition of two ports to enable a solvent flush stream around the valve stems to preclude the deposition of solids in this critical area. Momentary isolation of the cell for a thermal

ORNL DWG 82-1457R

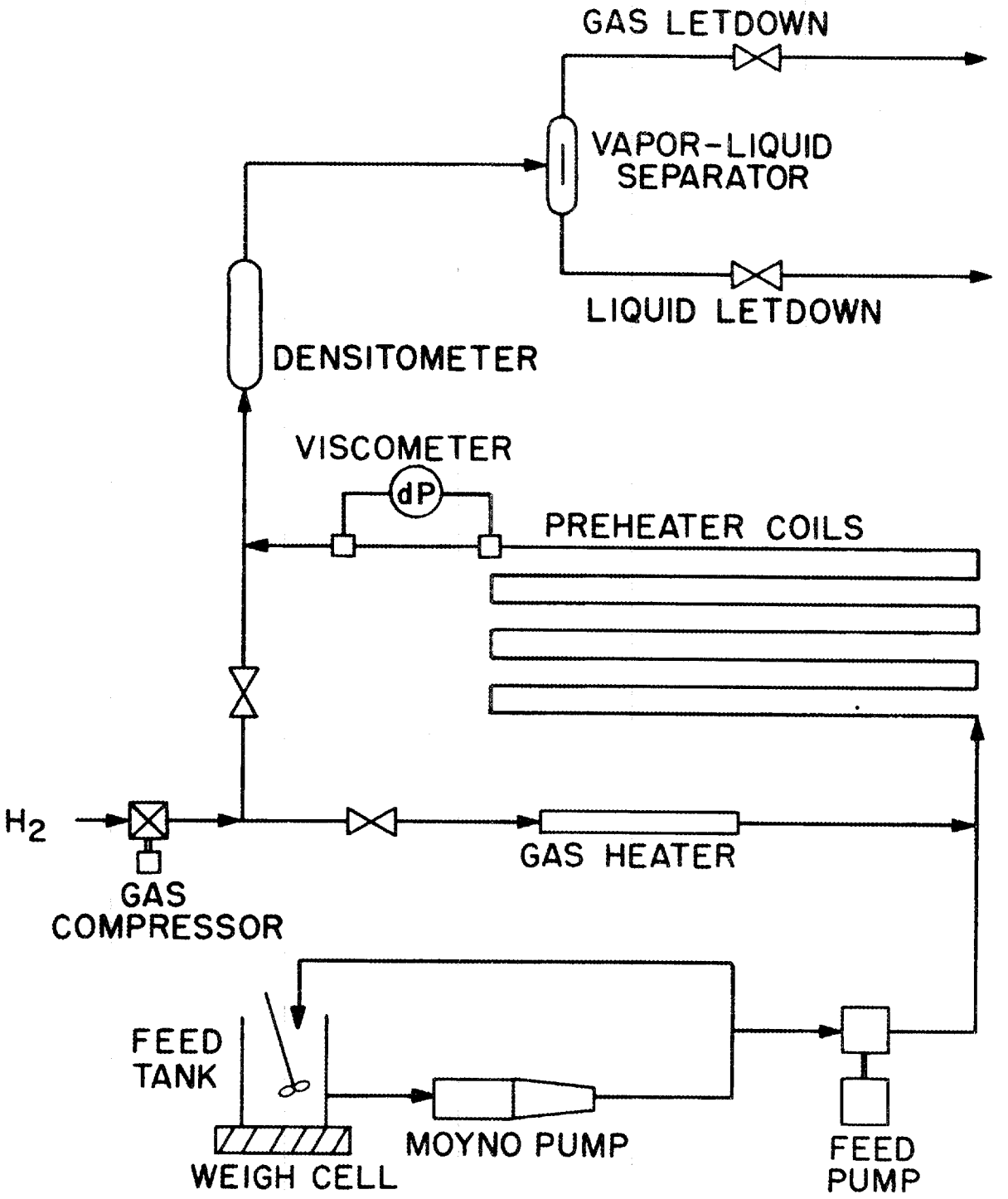

Fig. 5. Schematic diagram of the Coal Liquids Flow System, showing the thermal conductivity cell in place.

conductivity measurement was achieved by closing the port to the cell and opening the port to the bypass line.

2.2.4.2 Cell Temperature Control

The thermal conductivity cell was initially suspended in a heated sand bath during off-line static, high-temperature studies, both for calibration of the wire and measurements on toluene and coal liquids. The heating system, however, showed some deficiencies, specifically an extreme sensitivity to operating parameters and the need for a long equilibration period. Since measurements on coal liquids and slurries involved using the CLFS, which can be difficult to operate, the long delays would make measurements difficult, or even impossible. Therefore, a new heater was developed to correct the deficiencies of the sand bath.

The new system for controlling the temperature of the thermal conductivity cell was heated electrically and used the mass of the heater and the cell to damp out temperature oscillations. The heater vessel was fabricated from a 61-cm (24-in.) length of 12.7-cm (5-in.)-ID stainless steel pipe and contained six 220-V, 1-kW strip heaters which were attached to the exterior of the vessel. The thermal conductivity cell was suspended from a mounting bracket so that it was centered both radially and axially in the heated portion of the container. Copper shot, which was used as the heat transfer medium, was poured around the cell. Because the center of the cell was found to remain slightly warmer (by ~2 K) than the ends, two coiled Calrod heaters with independent controls were placed in the copper shot around each end. External thermocouples were placed at the ends and at the center of the cell; also, a thermocouple was installed in the inlet line to the cell at a

distance of ~15 cm from the cell. Temperatures were recorded by the PDP-11 computer; the CRT display of all temperatures was updated every 20 s.

3. EXPERIMENTAL PROCEDURES

Before a thermal conductivity measurement was performed on the CLFS, the cell was first equilibrated at the test temperature. The "metal bath" temperature controller was set at the desired temperature, and the solvent or slurry feed was pumped continuously through the CLFS preheater and then through the conductivity cell. The preheater temperature was adjusted so that the temperature of the fluid immediately upstream of the cell was the same as the external temperature of the cell body. To ensure that isothermal conditions had been attained, the resistance of the platinum wire in the cell was monitored after fluid flow was stopped temporarily. A resistance that remained constant (within ±5 mΩ equivalent to ±0.2 K) over a 60-s period indicated that the fluid was being neither heated nor cooled by the cell body. This minimization of temperature differentials within the cell was extremely important in making accurate measurements of thermal conductivity.

When temperatures were lined out, the fluid flow was bypassed around the thermal conductivity cell and, at the same time, the set point on the unit pressure controller was raised to a high level. (The latter was necessary to prevent the letdown valve from opening during data acquisition.) After a few seconds had been allowed for the fluid that had been isolated within the cell to come to rest, the current to the hot-wire gauge was triggered and the voltage drop-vs-time data were recorded at 1-ms intervals over a total time span of 4 s by the Nicolet oscilloscope. The set point of the pressure controller was then lowered

to the operating level, and fluid flow through the cell was reestablished. The 4000 data points were transferred from the oscilloscope to a computer disk file.

In one test made with toluene, a set of thermal conductivity measurements was taken during a period in which flow through the cell was not interrupted. Our objective was to demonstrate that this technique could be used, if necessary, for slurries because of problems associated with solids settling at higher temperatures. The experimental procedure was as described above, except that fluid flow was maintained through, rather than bypassed around, the thermal conductivity cell during the 4-s measurement period. Intuitively, for an infinitely long wire or for a wire with a large length/diameter ratio and a short measurement time, the response of the wire should be essentially unaffected by the presence of flow if the flow is laminar.

4. DATA ANALYSIS

Thermal conductivity is typically determined from the voltage-vs-ln(time) data by, first, computing apparent thermal conductivities using dV/d ln(time) values measured over increasing intervals, with each interval beginning at the same fixed time [e.g., 0.5 s (0.5—1.0, 0.5—1.5)]. Then these apparent conductivities are plotted vs linear time (the final time in the particular interval), and the data are extrapolated to time zero. (Obviously, if the V-vs-ln(time) curve is linear over the full range of time, thermal conductivity is independent of time and extrapolation is not necessary.) This procedure minimizes time-dependent errors such as those due to convection and mitigates the temperature dependence of thermal conductivity.

As long as the variation in apparent thermal conductivity over the full 4-s time interval is fairly small [i.e., V vs ln(time) is reasonably linear], the preceding method works well. However, when V vs ln(time) is quite nonlinear, as is the case when convection is apparently a problem, extrapolation to time zero yields thermal conductivities that are much too high. Toluene data obtained with a temperature differential of 3 K between the bottom and top of the cell (the bottom being hotter) are illustrated in Fig. 6. The curvature in this plot is considerable. Apparent thermal conductivities calculated from Fig. 6 over increasingly longer time intervals (e.g., 0.5–1.0, 0.5–1.5, 0.5–2.0 s) are shown plotted vs time in Fig. 7. Extrapolation of these values to time zero yielded a value of 1.240 mW cm^{-1} K^{-1} for the thermal conductivity of toluene at 354 K. This may be compared with a value of 1.141 mW cm^{-1} K^{-1} obtained from dV/d ln(time) for the earliest time interval (0.18 to 0.5 s; see Fig. 6), which is within 2% of the 1.164 obtained by interpolation from McLaughlin and Pittman's tabular listing[15] of smoothed thermal conductivities vs temperature for toluene. Such close agreement, in the case of toluene, from the use of the dV/d ln(time) value at this early time interval is probably fortuitous and is likely due to a cancellation of errors. The curvature induced by convection increases apparent thermal conductivity. Temperature corrections required to compensate for the finite diameter of the hot wire over this early time interval are negative, however, causing dV/d ln(time) to increase and apparent thermal conductivity to decrease because of the inverse proportionality [see Eq. (10b)].

The temperature corrections needed to compensate for the finite diameter of the hot wire in this early time regime are not only dependent on wire diameter but also on ω (= $2\ \rho_\ell\ C_{p_\ell}/\rho_w\ C_{p_w}$) [see Carslaw and

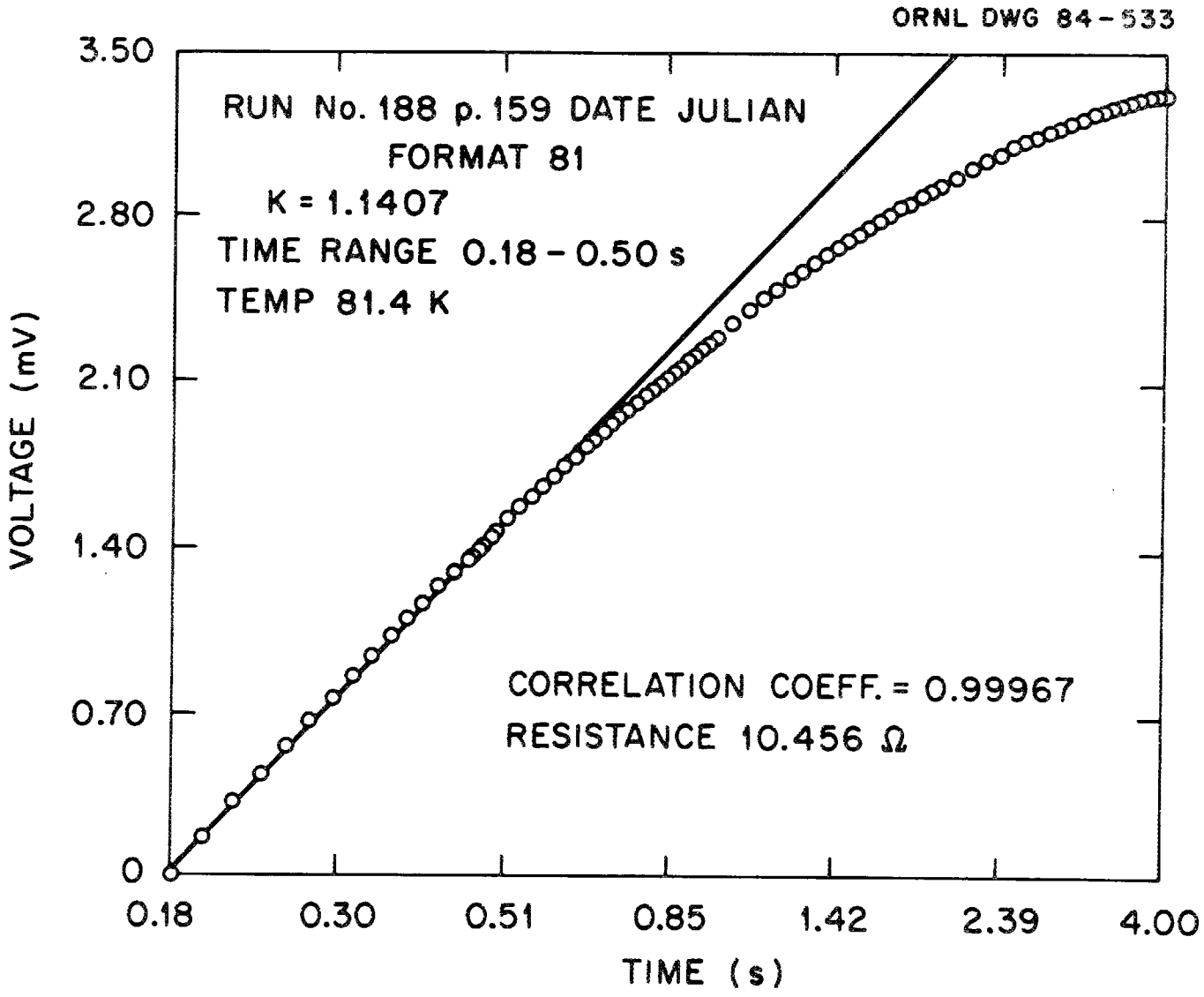

Fig. 6. Voltage data obtained for toluene with an imposed 3 K differential across the cell.

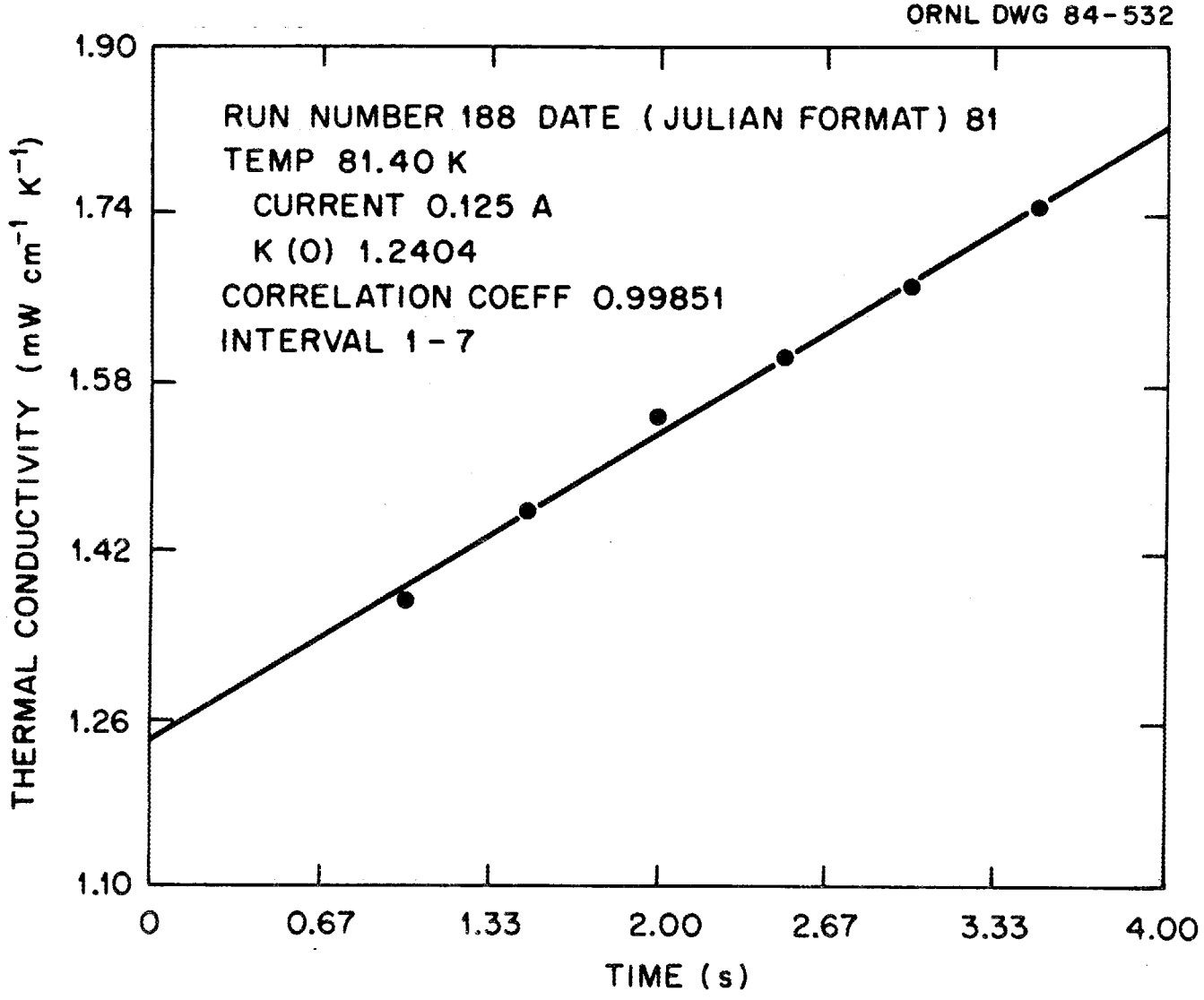

Fig. 7. Extrapolation of apparent thermal conductivities for toluene with convection present.

Jaeger[8] and Jaeger[16] for details of the mathematical development]. The density, ρ_w, and heat capacity, C_{p_w}, of the wire show minimal changes over the temperature range of interest. Thus, ω is only dependent on the properties of the liquid, ρ_ℓ and C_{p_ℓ}. A value of $\omega = 1.03$ was estimated for toluene at ambient temperature. At 450 K, $\omega = 1.3$ is estimated for a coal solvent [$\rho = 0.88$ (ref. 4), $C_p = 0.51$ (ref. 17)], and $\omega = 1.41$ is estimated for a typical slurry [$\rho = 0.99$ (ref. 4), $C_p = 0.49$ (refs. 17 and 18)]. Using the method described by Jaeger[16] and assuming perfect thermal contact between the hot wire and the surrounding fluid, estimates of the temperature corrections needed over the early time regime (0.2 to 0.5 s) are calculated in percent for a hot-wire diameter of 0.076 mm (see Table 1). These results illustrate the fact that, as ω increases from 1 to 1.4, the temperature corrections to compensate for the finite wire diameter diminish significantly; the effect of these corrections on dV/d ln(time) also decreases.

Table 1. Estimated temperature corrections for the effect of finite hot-wire diameter on thermal conductivity measurements for toluene, a coal solvent, and a coal slurry

Time (s)	Correction (%)		
	Toluene[a]	Solvent[b]	Slurry[c]
0.2	-2.7	-1.2	-0.43
0.3	-1.9	-1.0	-0.49
0.4	-1.4	-0.9	-0.45
0.5	-1.2	-0.7	-0.40
1.0	-0.6	-0.4	-0.26

[a]Ambient temperature, $\omega = 1.03$, $\rho = 0.867$ g/cm^3, $C_p = 0.41$ cal g^{-1} K^{-1}.

[b]450 K, $\omega = 1.3$, $\rho = 0.88$, $C_p = 0.51$.

[c]450 K, $\omega = 1.41$, $\rho = 0.99$, $C_p = 0.49$.

Good agreement between experimental thermal conductivities for toluene (measured in the CLFS) and those reported in the literature (as discussed later) support the use of the initial V-vs-ln(time) data when convection is present. Also, in thermal conductivity measurements with coal solvent at a particular temperature, the use of the initial V-vs-ln(t) values from the curved plots gave excellent agreement with the results from the linear V-vs-ln(t) plots. Convection apparently caused no problems since it was present in some runs and virtually absent in others.

5. RESULTS

The thermal conductivity of toluene was measured in the off-line system as a function of both temperature and current to the hot wire. The results are presented in Table 2; a comparison with literature values is shown in Table 3.

Table 2. Thermal conductivities of toluene measured by the transient hot-wire technique

Temperature (K)	Thermal conductivity ($mW\ cm^{-1}\ K^{-1}$)		
	75 mA[a]	100 mA[a]	125 mA[a]
328	1.240	1.234	1.222
338	1.217	1.201	1.190
348	1.142	1.147	1.156

[a]Current to the line-source gauge.

Thermal conductivity measurements were made on the CLFS with toluene, with Wilsonville solvent (sample V-178, tray 8, March 28, 1983), and with a slurry comprised of this solvent (API gravity = 7.5) and Illinois No. 6 coal at a solvent-to-coal (S/C) weight ratio of 2:1. These

Table 3. Comparison of measured thermal conductivities of toluene with previous work and literature data

Temperature (K)	Thermal conductivity ($mW\ cm^{-1}\ K^{-1}$) This work[a]	Literature[b]
328	1.232 (0.009)[c]	1.228
338	1.203 (0.013)	1.198
348	1.150 (0.018)	1.177

[a]Mean of data in Table 2.
[b]Taken from McLaughlin and Pittman, 1971 (see ref. 15).
[c]Number shown in parentheses is standard deviation.

measurements covered a temperature range of 295 to 500 K. The results are presented in Tables 4 and 5 and in Fig. 8. Literature values for toluene are included in Table 5, and slurry data from the literature[1,2] are shown in Fig. 8. The latter data were obtained for a slurry of Kentucky No. 9 coal and Wilsonville solvent at an S/C weight ratio of 2:1[2] and for a slurry of Powhatan No. 5 coal and SRC-II recycle solvent.[1]

Several attempts were made to measure thermal conductivity on coal slurries at temperatures >505 K. In each instance, resistance from the wire gauge to the cell body indicated the establishment of a conductive path. It seemed likely that this path was through the slurry; however, in the time remaining we were not able to establish this conclusively. Other possibilities were increased conductivity through the Macor™ seals or carbon bridging across these seals. If high conductivity in the coal slurry was actually the problem, use of the hot-wire technique would be precluded.

Table 4. Thermal conductivities of coal solvent and coal slurry

Temperature (K)	Thermal conductivity [mW cm^{-1} K^{-1}]	No. of measurements	Standard deviation[b]
	Solvent[a]		
296	1.23	9	0.03
338	1.21	3	0.002
375	1.12	3	0.02
438	1.02	3	0.03
	Slurry[a]		
295	1.51	6	0.02
339	1.39	3	0.04
374	1.27	3	0.04
438	1.15	3	0.03
498	0.92	1	–
505	1.02	3	0.01

[a]Solvent was Wilsonville sample V-178, tray 8, March 28, 1983. Slurry was prepared from Wilsonville solvent and Illinois No. 6 coal at a solvent/coal weight ratio of 2:1.

[b]Standard deviations are given for each set of measurements. Pooled standard deviation (excluding slurry data at 498 K) is 0.03 with 27 D.F. Corresponding 95% confidence limits are ±0.037, ±0.026, and ±0.021 for three, six, and nine determinations per set, respectively.

Table 5. Thermal conductivity of toluene

Temperature (K)	Thermal conductivity [mW cm^{-1} K^{-1}]	No. of measurements	Standard deviation	95% confidence limits
298[a]	1.318	3	0.008	±0.020
300	1.35	7	0.039	±0.036
326[a]	1.233	2	0.0005	±0.004
334[b]	1.17	3	0.044	±0.11
340[a]	1.191	2	0.0008	±0.007
395.5[a]	1.082	4	0.005	±0.008
398	0.93	3	0.012	±0.03

[a]Taken from Mclaughlin and Pittman, 1971 (see ref. 15).

[b]Measurements were taken while toluene was flowing through the cell. Temperature was calculated from the resistance of the platinum wire. Temperature of the cell body was 353 K.

6. DISCUSSION OF RESULTS

6.1 MEASUREMENTS ON TOLUENE

Table 3 demonstrates the precision and the accuracy, by comparison with literature values, of the thermal conductivity measurements of toluene in the off-line system at relatively low temperatures. Table 2 shows that thermal conductivity is unaffected by the hot-wire current over the range of 75 to 125 mA. (Typically, at least three thermal conductivity measurements were made for all fluids at every temperature level; each measurement was made at a different hot-wire current.)

Compared with literature values, the CLFS results for toluene at room temperature are accurate within the range of experimental error, as seen from Table 5. However, at 398 K, the CLFS thermal conductivity for toluene is significantly lower than the literature value, based on 95% confidence limits. It is possible, though, that the cell was not completely full of toluene during the measurements made at 398 K. For this run, in contrast to the usual procedure, the cell was initially

ORNL DWG 84-531

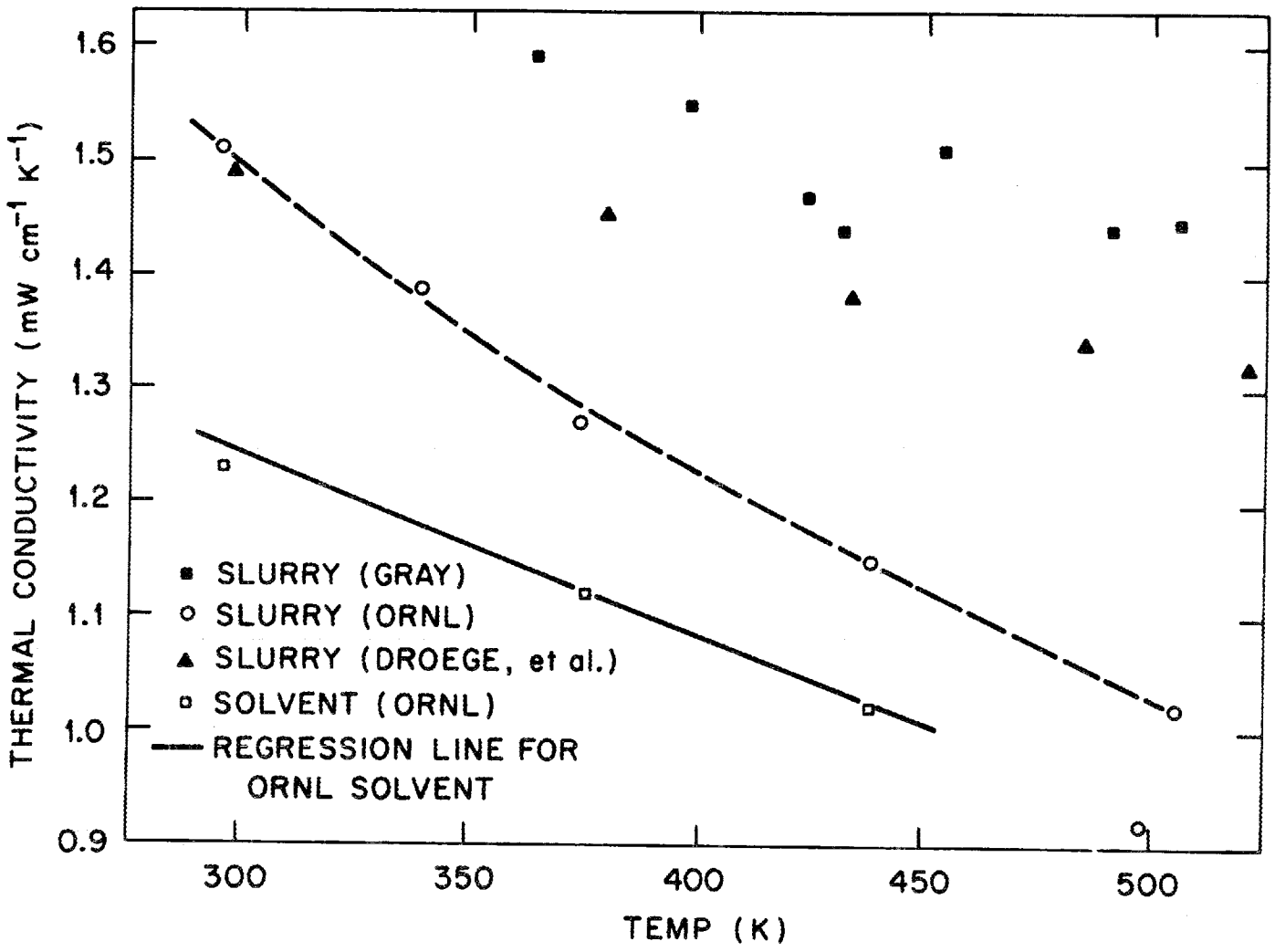

Fig. 8. Thermal conductivity of coal slurries and liquid.

filled with fluid and the flow was then stopped. Subsequently, the temperatures were stabilized and the measurements made. Even though the system was pressurized to 13.9 MPa by a continuous flow of nitrogen introduced downstream of the cell, toluene could have been lost from the cell during the temperature stabilization period. This loss could have been caused by pressure fluctuations resulting from operation of the let-down valve. Another cause of the lower value at 398 K could be the greater positive correction required (as discussed in Sect. 4) because of the lower viscosity at the higher temperature. If this were the case, convection currents would have to be absent, which is unlikely under the low-viscosity conditions. Consequently, the toluene data at 398 K need to be rechecked. The measurement at 334 K, which was taken while toluene was flowing through the cell (as described in Sect. 3), also agrees (within confidence limits) with the literature value at that temperature. The 95% confidence range, though, is relatively broad. Part of the reason for the variance in the data is that the CLFS preheater was not operating during this run. Thus, the feed toluene was being preheated only as it passed through about 2 ft of tubing within the hot bed of copper shot before entering the conductivity cell. As a result, the toluene within the cell was colder than the cell body; the fluid temperature, as indicated by the resistance of the platinum wire, was ~19 K lower than that of the cell body. Convection currents at the cell wall undoubtedly existed, in addition to the nominal fluid flow during this measurement. Agreement with the literature value was surprisingly good, considering the crudeness of this experiment. These tests at 334 K indicated that acceptable thermal conductivity data can be obtained with fluid flowing through the cell. For slurry measurements, this method

could alleviate problems with settling of solids. Although additional measurements at the higher temperatures would be desirable, the accuracy of the CLFS data is believed to be demonstrated by the thermal conductivity values determined for toluene at 298 and 334 K.

6.2 MEASUREMENTS ON SOLVENTS AND SLURRIES

The precision of both the slurry and the solvent measurements is very good (Table 4), with a pooled standard deviation (S.D.) of 0.03. Based on this S.D., the 95% confidence limits calculated according to Student's "t" test are, on the average, ±3% of the experimental thermal conductivity value. The one value for slurry at 498 K (which was not used in calculating the pooled S.D.) appears to be incorrect since it lies well outside the 95% confidence interval for the slurry value of 505 K. (The difference was too large to be explained by the 7-K temperature difference.) Therefore, this data point was ignored in drawing the curve in Fig. 8.

As discussed previously, the high viscosity of the slurry eliminated convection as a problem in the thermal conductivity measurements. Consequently, the V-vs-ln(t) curves were generally quite linear over the full 4-s time range and, therefore, the thermal conductivity data are believed to be accurate. As seen in Fig. 8, the slurry data exhibit no unusual or unexpected behavior with temperature. Although measurements at more than four temperature levels would provide a more definitive picture, the behavior appears to be consistent with that of the slurry. However, because of the few number of temperatures, it is instructive to examine the solvent data at each temperature level briefly.

Thermal conductivities of the solvent at room temperature, 375 K, and 438 K are believed to be accurate because of the linearity of the

V-vs-ln(t) curves and the reproducibility of the data, as shown by the S.D. values in Table 4. Although the solvent data at 338 K show excellent reproducibility, each of the three V-vs-ln(t) curves at this temperature exhibits a considerable amount of curvature, probably due to convection currents. Thus, the thermal conductivity reported at 338 K is believed to be too high. However, it is not possible to calculate the required correction, if any. If the value at 338 K were to be decreased somewhat, the behavior of the solvent and of the slurry data with temperature variation, as shown in Fig. 8, would appear to be more consistent with one another; that is, thermal conductivity would decrease quite linearly with temperature up to ~440 K. The linear regression line suggests that the value at 338 K should be somewhat less than 1.2 mW cm^{-1} K^{-1}.

At room temperature the thermal conductivity of the slurry approximates the slurry measurement by Droege et al., as seen in Fig. 8. The ORNL data, however, are seen to exhibit a significantly greater temperature dependence than either of the two other slurries shown. Of course, different coals and solvents were used in the referenced cases. Although this may explain the differences between the slurries, other effects may be contributing to the behavior of the referenced data with temperature. For example, these data were generated by static measurement methods; consequently, with higher and higher temperatures, the slurry is "aged" or reacted over longer and longer periods of time due to the heatup time required for the apparatus. Production of heavy material from the coal during this "aging" period could increase the thermal conductivity of the slurry; convection is also a possible effect. To prevent coal from settling, a stirred autoclave was utilized in one investigation (the stirrer was shut off just prior to the measurement). With such equipment,

a heating mantle is typically mounted in a concentric fashion, and the top head of the autoclave, through which the stirrer shaft passes, is exposed to the atmosphere. Thus, temperature gradients at the vessel wall and, consequently, convection currents within the fluid might be anticipated.

Thermal conductivity data for coal liquids are plotted vs temperature in Fig. 9. The data include those from Perkins et al. on SRC-I and COED solvents[3], from Gray on SRC-II liquid,[1] from Droege et al. on SRC-I solvent,[2] and from this work. With the exception of the SRC-I data from Perkins et al., the thermal conductivities lie within ~10% of one another over the indicated temperature range. The lower values of the SRC-I liquid from Perkins et al. may be attributed to the low specific gravity of their solvent. This would tend to agree with conclusions from the SRC-II studies where thermal conductivity was found to increase with increasing specific gravity and boiling point. However, the COED liquid generally exhibits the highest thermal conductivity, even though its density is next to the lowest. Thus, other properties of the coal liquid apparently affect thermal conductivity. For example, Gray mentions the effect of heteroatoms (e.g., oxygen) on thermal conductivity.[1]

6.3 CALCULATED THERMAL CONDUCTIVITIES FOR COAL

The thermal conductivity of the Illinois No. 6 coal used in this work was calculated by applying the Rayleigh equation[19] to the experimental results for the solvent and the slurry. This equation, which is a theoretically derived correlation for estimating the thermal conductivity of heterogeneous mixtures of monodispersed spheres in a liquid, is as follows:

ORNL DWG 84-530

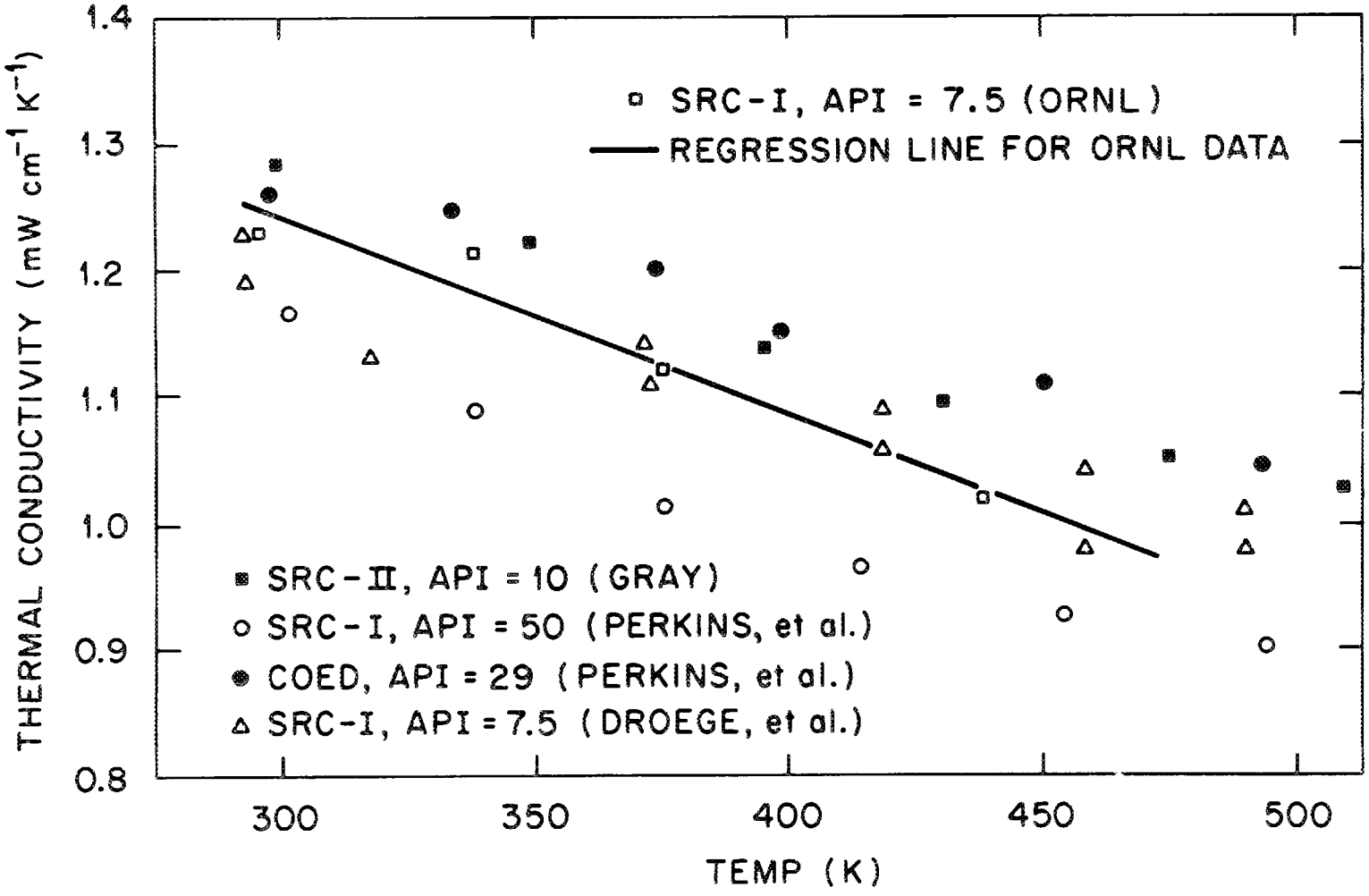

Fig. 9. Thermal conductivities of coal liquids.

$$k_s = k\left[1 - \frac{3X_v}{\left(\frac{2k + k_p}{k - k_p}\right) + X_v + 0.525\left(\frac{k_p - k}{k_p + 0.75k}\right)X_v^{3.333}}\right], \qquad (11)$$

where

k = thermal conductivity of the solvent,

k_p = thermal conductivity of the coal particle,

k_s = effective thermal conductivity of the slurry,

X_v = volume fraction of the particles.

The thermal conductivity of the coal was calculated as a function of temperature, utilizing density-vs-temperature data for Illinois No. 6-Wilsonville solvent slurries from previous ORNL work[4] to estimate X_v. The results, along with results calculated using a straight line fit to the solvent thermal conductivity data, are shown in Table 6. The thermal conductivities of the coal are seen to fall within, or slightly below, the range of values that were determined for a variety of coals by direct measurements on lumps of coal,[20] as shown in Table 7. Assuming that the coal does not react with the solvent, this agreement appears to support the earlier observation that the ORNL thermal conductivity data for the solvent and for the slurry are consistent with each other. As seen in Figs. 8 and 9, the slurry and the solvent data of Droege et al. and of Gray do not show consistency. That is, the thermal conductivity of the coal as calculated from the solvent and the slurry data at the higher temperatures would be much greater than expected, based on Table 7. For example, at 438 K the thermal conductivity of the coal is estimated to be 3.9 mW cm^{-1} K^{-1} from the data of Droege et al., while a value of 1.6 mW cm^{-1} K^{-1} was obtained from the ORNL data. At room temperature,

Table 6. Thermal conductivities of Illinois No. 6 coal, calculated from the Rayleigh equation, over the temperature range 296 to 438 K

Temperature (K)	Calculated thermal conductivity[a] ($mW\ cm^{-1}\ K^{-1}$)	
	From data	From regression line
296	2.47	2.38
338	1.96	2.07
378	1.76	1.73
438	1.60	1.58

[a]Calculated using ORNL data for solvent and slurry density-vs-temperature data.

Table 7. Measured thermal conductivities of coal[a] over the temperature range 293 to 1073 K

Temperature (K)	Thermal conductivity ($mW\ cm^{-1}\ K^{-1}$)	
	Mean	Approx. range
293	2.76	2.30 — 3.35
373	2.30	1.88 — 3.35
473	2.34	1.88 — 3.35
573	2.38	1.88 — 3.35
673	2.13	1.88 — 3.35
773	3.35	2.51 — 5.02
873	5.36	3.56 — 8.37
973	8.87	5.44 — 13.8
1073	12.0	9.62 — 20.9

[a]Taken from Meredith, 1959 (see ref. 19). Measurements made on 12 coals covering a wide range of rank and swelling number.

the results of Droege et al. and the ORNL data yield approximately the same conductivity value. It should be emphasized here that an ITSL (integrated two-stage liquefaction process that utilizes catalytic hydrogenation) solvent was used in the ORNL experiments. Consequently, this solvent would be expected to be more reactive than a "thermal" SRC-I solvent. Thus, the slurry and solvent data obtained by ORNL, by Gray, and by Droege et al. have shown internal consistencies and inconsistencies as well as external agreements and disagreements. A considerable effort would be required to unravel the various effects of solvent type, coal type, "aging," convection, etc., that have been discussed here.

7. CONCLUSIONS

1. Thermal conductivities measured on the solvent employed in these experiments are in general agreement with existing literature data. Thermal conductivities of the slurry were considerably lower than literature data at elevated temperatures, possibly due to the use of freshly prepared mixtures that had not been subjected to the thermal "aging" conditions typical of static measurements in an autoclave.

2. The strong temperature dependence of the thermal conductivity of the slurry will significantly affect the design of a feed slurry preheater for a commercial plant.

3. With increasing temperature, the thermal conductivities of a Wilsonville solvent and a Wilsonville solvent and Illinois No. 6 coal slurry decreased from 1.23 to 1.02 $mW/cm^{-1} \cdot K^{-1}$ (296 to 438 K) and from 1.51 to 1.02 $mW/cm^{-1} \cdot K^{-1}$ (295 to 505 K), respectively. The data were internally consistent, and measurements on a reference liquid, toluene, were within 3% of literature values to 348 K.

4. If difficulties arise because of problems such as solids settling, thermal conductivity measurements of a slurry may be made while the fluid is flowing through the cell.

8. RECOMMENDATIONS

Thermal conductivities of coal slurries obtained using the CLFS are unique in that they were measured under more or less dynamic conditions simulating actual conditions in a coal liquefaction facility. Maximum measurement temperatures achieved during this study were 505 K. Thermal conductivities of coal solvents and slurries are needed up to 700 K (800°F) under conditions which simulate the time at temperature history in a coal liquefaction plant. During this study, several attempts were made to measure the thermal conductivity of coal slurries at temperatures in excess of 500 K without success. Time and funding constraints prevented pinpointing the actual reason for the failures. However, before any attempts are made to accomplish these measurements (>500 K) using the hot-wire method, electrical conductivities of coal solvents and slurries should be determined at high temperatures. Some experimental evidence was obtained which indicated that high electrical conductivity was at least a contributory factor in the failures.

9. REFERENCES

1. J. A. Gray, Solvent Refined Coal (SRC) Process Selected Physical, Chemical and Thermodynamic Properties of Narrow Boiling Range Coal Liquids for the SRC-II Process, DOE/ET/10104-7, 1981.

2. J. W. Droege, G. H. Stickford, J. R. Longanbach, R. Venkateswar, and S. P. Chanhan, Thermophysical Properties of Coal Liquids. Final Report, BMI-2092, 1982.

3. R. Perkins, E. D. Sloan, and M. S. Graboski, "Measurement of the Thermal Conductivity of Two Coal Liquids from Ambient Conditions to 220 C and 136 ATM," presented at ASME Meeting, Boston, Massachusetts, November 1983.

4. G. E. Oswald, "Physical Properties of Coal Liquids," pp. 14–38 in Fossil Energy Program Quarterly Progress Report for the Period Ending September 30, 1979, ed. L. E. McNeese, ORNL 5612, Oak Ridge National Laboratory, December 1979.

5. R. W. Tait and B. A. Hills, "Methods for Determining Liquid Thermal Conductivities," Ind. Eng. Chem. 56(7), 29 (1964).

6. W. Fritz and H. Poltz, "Absolutbestimmung der Wärmeleitfähighkeit von Flüssigkeiten I. Kritische Versuche an einer neuen Plattenapparatur," Int. J. Heat Mass Transfer 5, 307 (1962).

7. H. Poltz and R. Jugel, "The Thermal Conductivity of Liquids — IV Temperature Dependence of Thermal Conductivity," Int. J. Heat Mass Transfer 10, 1075 (1967).

8. H. S. Carlslaw and J. C. Jaeger, Heat Conduction in Solids, Oxford University Press, England, 1959, p. 261.

9. M. Abramowitz and I. A. Stegun, eds., Handbook of Mathematical Functions, Dover, New York, 1956.

10. E. McLaughlin, "The Thermal Conductivity of Liquids and Dense Gases," Proc. Royal Soc. London (Series A) 273, 389 (1963).

11. S. Chandrasckhar, Hydrodynamic and Hydromagnetic Stability, Clarendon Press, Oxford, 1961.

12. E. McLaughlin and J. F. T. Pittman, "Determination of the Thermal Conductivity of Toluene — A Proposed Data Standard — from 180 to 400 K under Saturation Pressure by the Transient Hot-Wire Method I. The Theory of the Technique," Philos. Trans. R. Soc. London A.270, 557, 1971.

13. C. S. Chang, J. B. Boder, J. L. Plausky, The Measurement of Thermal Conductivities in Coal Fluids, ORNL/MIT-334, September 1981.

14. D. D. Lee and T. L. Sams, Final Report — Effects of Preheater Residence Time on the Rheology of SRC-I Slurries under Preheater Conditions, ORNL/TM-8708, September 1983.

15. E. McLaughlin and J. F. T. Pittman, "Determination of the Thermal Conductivity of Toluene — A Proposed Data Standard — From 180 to 400 K under Saturation Pressure by the Transient Hot-Wire Method II. New Measurements and a Discussion of Existing Data," Philos. Trans. R. Soc. London A. 270, 579 (1971).

16. J. C. Jaeger, "Conduction of Heat in an Infinite Region Bounded Internally by a Circular Cylinder of a Perfect Conductor," Aust. J. Phys. 9, 167 (1956).

17. Electric Power Research Institute, Solvent-Refined Coal Process: Data Correlation and Analysis, AF-1157, Research Project 915, pp. 3-81, August 1979.

18. Institute of Gas Technology, Coal Conversion Systems Technical Data Book, DOE/FE/05157-2, August 1982.

19. R. E. Meredith, Studies on the Conductivities of Dispersions, UCRC-8667, USAEC, July 1959.

20. S. Badzioch, D. R. Gregory, and M. A. Field, "Investigation of the Temperature Variation of the Thermal Conductivity and Thermal Diffusivity of Coal," Fuel (London) 43, 267 (1964).

10. APPENDIX

APPENDIX

A. Onset of natural convection (see ref. 11)

$$R_a = P_r \cdot G_r = \frac{g\beta\rho^2 C_p}{k\eta} \Delta T d^3 < 1000 \quad . \tag{A.1}$$

The solution of Laplace's equation ($\nabla^2 T = 0$) for concentric cylinders at steady state assuming constant pressure is

$$k = \frac{q \ln \frac{b}{a}}{2\pi L(T_2 - T_1)} \quad . \tag{A.2}$$

Here, q is the heat lost by conduction from the hotter surface at T_2 to the colder surface at T_1, a and b are the inner and outer radii of the concentric cylinders, and L is their length. The temperature differential of the pseudo-steady state given by Eq. (A.2) is equated to the nonsteady state temperature differential of Eq. (5); however, the distance b in Eq. (A.2) is the radius of expanding high-temperature fluid surrounding the hot-wire gauge and must be determined.

$$T(r,t) \approx \Delta T = \frac{q/L}{2\pi k} \ln \frac{b}{a} \quad , \tag{A.3}$$

or

$$b = a \exp\left(\frac{2\pi k \Delta T}{q/L}\right) \quad , \tag{A.4}$$

$$\text{and } d = b - a = a \left\{ \exp\left(\frac{2\pi k \Delta T}{q/L}\right) - 1 \right\} \quad . \tag{A.5}$$

Now, substituting Eq. (A.5) for d and the major terms for $T(r,t) = \Delta T$ [Eq. (5)] into the Rayleigh expression, Eq. (A.1), with the substitutions

$$t^* = 4kt/(\rho C_p a^2) \quad , \tag{A.6}$$

and

$$T^* = 4\pi k\Delta T/(q/L) = \ln \frac{t^*}{\gamma'} \quad , \tag{A.7}$$

yields

$$\frac{g\beta\rho^2 q a^3 C_p}{\eta k^2 4\pi L}\left\{T^*\left[\exp\left(\frac{T^*}{2}\right) - 1\right]^3\right\} < 1000 \quad . \tag{A.8}$$

Now, for toluene at 333 K:

$\eta = 0.38$ cP $= 3.8 \times 10^{-3}$ g cm^{-1} s^{-1},

$k = 1.225 \times 10^{-3}$ J cm^{-1} s^{-1} K^{-1},

$C_p = 1.7$ J g^{-1} K^{-1},

$q = 0.207$ W $= 0.207$ J s^{-1},

$\beta = 11 \times 10^{-4}$ K^{-1} (thermal expansion coefficient),

$\alpha' = k/\rho C_p = 8.707 \times 10^{-4}$ cm^2 s^{-1}.

Substituting in A.8,

$$\frac{g\beta\rho^2 q a^3 C_p}{\eta k^2 4\pi L} = \frac{(980)(11 \times 10^{-4})(0.83)^2(0.207)(3.81 \times 10^{-3})^2(1.7)}{(3.8 \times 10^{-3})(1.225 \times 10^{-3})^2(4\pi)(29)}$$

$$= 6.935 \times 10^{-3} \ .$$

Solving for A.6 —

$$t^* = 4\alpha' t/a^2 = 2.399 \times 10^2 t \quad ,$$

and A.7 —

$$T^* = \ln \frac{t^*}{\gamma'} = \ln \frac{2.399 \times 10^2 t}{1.7811} = \ln 134.7t \ ,$$

$$\ln(134.7t)\left[\exp\left(1/2\ \ln(134.7t)\right)-1\right]^3 < \frac{1000}{6.935 \times 10^{-3}} = 1.442 \times 10^5.$$

t (s)	A = ln (134.7t)	β = exp (A/2)	C = [B − 1]^3	D = A • C
8	6.9822	32.823	3.223×10^4	2.250×10^5
6.5	6.7746	29.586	2.336×10^4	1.583×10^5
6	6.6946	28.426	2.063×10^4	1.381×10^5

Therefore, time (t) for onset of convection for toluene at 60°C is $6 < t < 6.5$ s.

INTERNAL DISTRIBUTION

1. R. A. Bradley
2. A. C. Buchanan, III
3. H. D. Cochran, Jr.
4. W. F. Fulkerson
5. R. W. Glass
6. J. K. Huffstetler
7. E. K. Johnson
8-10. J. K. Johnson
11. R. R. Judkins
12-16. J. E. Mrochek
17. D. C. Parzyck
18. D. R. Reichle
19. P. S. Rohwer
20. C. D. Scott
21. M. Siman-Tov
22. S. P. N. Singh
23. M. G. Stewart
24. P. T. Thornton
25. R. M. Wham
26-30. J. H. Wilson
31. R. G. Wymer
32. Central Research Library
33. ORNL-Y-12 Technical Library Document Reference Section
34. Laboratory Records
35. Laboratory Records, ORNL-RC
36. ORNL Patent Section

EXTERNAL DISTRIBUTION

37. Alberta Research Council, Fuel Sciences Division, Coal Research Center, 1 Oil Patch Drive, P.O. Box 1310, DeVon, Alberta, Canada T6G 2C2

    S. K. Chakrabartty

38-39. Battelle Columbus Laboratories, 505 King Ave., Columbus, OH 43201

    J. W. Droege
    J. H. Oxley

40. Catalytic, Inc., P.O. Box 239, Wilsonville, AL 35186

    J. R. Gough

41. Chevron Research Company, 576 Standard Avenue, Richmond, CA 94508

    J. H. Shinn

42-43. Conoco Coal Development Company, 4000 Brownsville Road, Library, PA 15219

    F. Burke
    D. G. Nichols

44-48. Electric Power Research Institute, P.O. Box 10412, 3412 Hillview Avenue, Palo Alto, CA 94303

S. B. Alpert
D. M. Golden
C. J. Kulik
R. H. Wolk
K. E. Yeager

49-50. Exxon Research and Engineering Company, Clinton Township, Route 2 East, Annandale, NJ 08801

M. L. Gorbaty
Henry Shaw

51. Exxon Research and Engineering Company, P.O. Box 101, Florham Park, NJ 07932

G. Sorell

52-53. Exxon Research and Engineering Company, P.O. Box 4255, Baytown, TX 77522

Linda Hoffman
F. F. Tao

54. Kerr-McGee Corporation, P.O. Box 25861, Oklahoma City, OK 73125

R. W. Corbett

55. Oklahoma State University, School of Chemical Engineering, 423 Engineering North, Stillwater, OK 74078

B. L. Crynes

56. University of Oklahoma, Chemical Engineering Department, Norman, OK 73019

K. E. Starling

57. University of Utah, Department of Chemical Engineering, Salt Lake City, UT 84112

G. R. Hill

58. Department of Energy, Oak Ridge Operations Office, Oak Ridge, TN 37831

Assistant Manager for Energy Research and Development

59-75. Department of Energy, Office of Fossil Energy, Washington, DC 20545

D. L. Bauer
D. J. Beecy
R. J. Braitsch
P. H. Buhl
J. P. Carr
S. J. Dapkunas
A. G. Dietz, Jr.
B. Fedarko
K. N. Frye
H. W. Hochheiser
C. L. Miller
R. C. Porter
J. L. Powell
P. C. Scott
T. B. Simpson
M. I. Singer
H. E. Thomas

76-85. Department of Energy, Pittsburgh Energy Technology Center, P.O. Box 10940, Pittsburgh, PA 15236

S. Akhtar
B. D. Blaustein
S. W. Chun
J. J. Lacey
S. R. Lee
J. A. Reuther
T. C. Ruppel
J. W. Wiggins (3)

86-112. Department of Energy, Technical Information Center, P.O. Box 62, Oak Ridge, TN 37831

For distribution of microfiche as shown in DOE/TIC-4500, Distribution Categories UC-90 (Coal Conversion and Utilization), UC-90a (Coal Science and Analysis), UC-90c (Coal Gasification), UC-90d (Liquefaction), UC-90e (Direct Combustion of Coal), UC-90f (Advanced Power), UC-90h (Materials and Components), UC-90i (Environmental Protection, Waste Utilization, and Safety), and UC-90j (Systems Studies, Policy and Legislation).