OAK RIDGE NATIONAL LABORATORY LIBRARY
3 4456 0003981 1

ORNL/TM-9900

ornl

OAK RIDGE NATIONAL LABORATORY

MARTIN MARIETTA

Operating Manual for the Tower Shielding Facility

OAK RIDGE NATIONAL LABORATORY
CENTRAL RESEARCH LIBRARY
CIRCULATION SECTION
4500N ROOM 175
LIBRARY LOAN COPY
DO NOT TRANSFER TO ANOTHER PERSON
If you wish someone else to see this report, send in name with report and the library will arrange a loan.

OPERATED BY
MARTIN MARIETTA ENERGY SYSTEMS, INC.
FOR THE UNITED STATES
DEPARTMENT OF ENERGY

Printed in the United States of America. Available from
National Technical Information Service
U.S. Department of Commerce
5285 Port Royal Road, Springfield, Virginia 22161
NTIS price codes—Printed Copy: A10 Microfiche A01

This report was prepared as an account of work sponsored by an agency of the United States Government. Neither the United States Government nor any agency thereof, nor any of their employees, makes any warranty, express or implied, or assumes any legal liability or responsibility for the accuracy, completeness, or usefulness of any information, apparatus, product, or process disclosed, or represents that its use would not infringe privately owned rights. Reference herein to any specific commercial product, process, or service by trade name, trademark, manufacturer, or otherwise, does not necessarily constitute or imply its endorsement, recommendation, or favoring by the United States Government or any agency thereof. The views and opinions of authors expressed herein do not necessarily state or reflect those of the United States Government or any agency thereof.

ORNL/TM-9900

Operations Division

OPERATING MANUAL FOR THE TOWER SHIELDING FACILITY

Operations Division Staff

Manuscript completed - November 1985
Date published - December 1985

NOTICE: This document contains information of a preliminary nature. It is subject to revision or correction and, therefore, does not represent a final report.

Prepared by the
OAK RIDGE NATIONAL LABORATORY
Oak Ridge, Tennessee 37831
operated by
Martin Marietta Energy Systems, Inc.
for the
U.S. DEPARTMENT OF ENERGY
under Contract No. DE-AC05-84OR21400

J. H. Swanks, Director
Operations Division

R. V. McCord, Head
Reactor Operations Section

L. B. Holland
Reactor Supervisor

OAK RIDGE NATIONAL LABORATORY LIBRARY
3 4456 0003981 1

PREFACE

This manual provides information necessary to operate and perform maintenance on the reactor systems and all equipment or systems which can affect their operation or the safety of personnel at the Tower Shielding Facility. It will be kept up-to-date so that it can be used to train personnel.

The first four chapters consist of introductory and descriptive material of benefit to personnel in training, the qualifications required for training, the responsibilities of the personnel in the organization, and the procedures for reviewing proposed experiments. Chapter 8, Emergency Procedures, is also a necessary part of the indoctrination of personnel.

The procedures for operation of the Tower Shielding Reactor (TSR-II), its water cooling system, and the main tower hoists are outlined in Chapters 5, 6, and 7. The Technical Specification surveillance requirements for the TSR-II are summarized in Chapter 9. The maintenance and calibration schedule is spelled out in Chapter 10. The procedures for assembly and disassembly of the TSR-II are outlined in Chapter 11.

Many individuals have contributed ideas, information, and/or effort to develop and to utilize the Tower Shielding Facility and the four reactors which have been used there and to write the procedures for operating them. Since many of the individuals are cited in Volume 1 of the TSR-II Design and Operating Report, ORNL 4223, no attempt will be made to enumerate their names here.

TABLE OF CONTENTS

Page

LIST OF FIGURES

LIST OF TABLES

1. INTRODUCTION 1-1

1.1 DESCRIPTION OF TOWER SHIELDING FACILITY 1-1

1.2 PURPOSE 1-1

1.3 PROCEDURES FOR CHANGING THE MANUAL 1-3

2. FACILITY ADMINISTRATION 2-1

2.1 ORGANIZATION 2-1

2.1.1 Reactor Operations Section Head 2-1
2.1.2 Group Leader, Shielding Group 2-1
2.1.3 Supervisor, Reactor Operations TSF-HPRR Areas . . 2-1
2.1.4 Experiment Supervisor 2-1
2.1.5 Training Coordinator 2-4
2.1.6 TSF Shift Supervisor 2-4
2.1.7 Health Physics and Safety Personnel 2-4
2.1.8 Experiment Personnel. 2-5
2.1.9 Senior Reactor Operators 2-5
2.1.10 Reactor Operators 2-5
2.1.11 Plant and Equipment Field Engineer 2-5
2.1.12 Plant and Equipment Foreman 2-5
2.1.13 Reactor Controls Design Engineer 2-5
2.1.14 Reactor Controls Field Engineer 2-6
2.1.15 Instrument Technicians 2-6

2.2 TRAINING AND CERTIFICATION OF PERSONNEL 2-6

2.2.1 Reactor Operator 2-6
2.2.2 Senior Reactor Operator 2-7
2.2.3 Recertification of Personnel 2-8

2.3 OPERATION AND MAINTENANCE RECORDS 2-9

2.3.1 Routine Checkout and Operations Records 2-9
2.3.2 Experiment Review and Approval. 2-11
2.3.3 Change Memoranda. 2-11
2.3.4 Maintenance Records 2-12
2.3.5 Calibration, Inspection, and Test Data 2-12
2.3.6 Operator Training and Certification Records . . . 2-13

Page

3. FACILITY DESCRIPTION 3-1

3.1 SITE DESCRIPTION 3-1

3.2 EXCLUSION FENCING 3-1

3.3 UNDERGROUND BUILDINGS 3-1

3.4 TOWER DESIGN AND FACILITY LAYOUT 3-6

3.4.1 Tower Description 3-6
3.4.2 Guy Cables 3-6
3.4.3 Wind Loading 3-6
3.4.4 Lightning Protection System 3-8

3.5 HOISTING EQUIPMENT 3-8

3.6 REACTOR- AND SHIELD-HANDLING POOL 3-9

3.7 ALTERNATE USE OF THE HANDLING TOOL. 3-9

4. TSR-II DESCRIPTION 4-1

4.1 MECHANICAL DESIGN 4-1

4.1.1 Core Region 4-1
4.1.2 Pressure Vessel 4-1
4.1.3 Fuel Annulus 4-1
4.1.4 Fuel Elements 4-4
4.1.5 Control Mechanism Housing 4-4
4.1.6 Control Mechanism 4-6
4.1.7 Fuel Element Mounting 4-9
4.1.8 Outer Reflector Region and Shields 4-10

4.2 INSTRUMENTATION FOR REACTOR OPERATION AND PROTECTION . . 4-12

4.2.1 Control Logic 4-12
4.2.2 Neutron Flux Readout 4-12
4.2.3 Solenoid Shutdown Valve 4-16
4.2.4 Shim-Safety Plate Reactivity 4-17
4.2.5 Regulating Plate Reactivity 4-17
4.2.6 Shim-Safety Plate Seat Information 4-17
4.2.7 Shim-Safety-Plate Clutch Information 4-21
4.2.8 Plate Position Indicators 4-21
4.2.9 Servomechanism Control. 4-21
4.2.10 Instrument Location 4-21
4.2.11 Water Flow Interlocks 4-21
4.2.12 Annunciator System 4-22

Page

4.3 PROTECTION SYSTEM 4-23

4.4 HEAT-REMOVAL SYSTEM 4-27

4.4.1 Main Flow Circuit 4-27
4.4.2 Direct Current Pump for Cooling and Heating . . . 4-29
4.4.3 Reduced Flow Operation 4-29
4.4.4 Shim Pump 4-29
4.4.5 Fill and Pressure Pump 4-30
4.4.6 Variable Pressure Regulating System 4-30
4.4.7 Make-up Water System 4-32
4.4.8 Demineralizer and Waste Disposal 4-32
4.4.9 Water Activity Monitor 4-32

4.5 REACTOR SUSPENSION SYSTEM 4-33

4.6 BIG BEAM SHIELD 4-33

5. TSR-II WATER COOLING SYSTEM - SPECIAL PROCEDURES 5-1

5.1 DRAINING THE SYSTEM 5-1

5.1.1 Disposal of System Water 5-1
5.1.2 Draining the Main System 5-1
5.1.3 Draining of Isolated Parts of the System 5-3

5.2 FILLING THE SYSTEM 5-5

5.3 FREEZE-UP PRECAUTIONS 5-6

5.3.1 Prewinter Inspections 5-7
5.3.2 General Measures for Preventing Freeze-Up 5-8
5.3.3 Specific Measures for Preventing Freeze-Up 5-10

5.4 REGENERATING THE DEMINERALIZER 5-11

5.4.1 Advance Preparation 5-12
5.4.2 Mixing the Chemicals 5-14
5.4.3 Setting of Valves and Pumps 5-14
5.4.4 Water and Air Supply 5-16
5.4.5 Regeneration Procedure 5-16
5.4.6 Restoration to Normal Operation 5-17

6. HOIST OPERATING PROCEDURES 6-1

6.1 OPERATIONAL SAFETY 6-1

6.2 OPERATION OF MAIN HOISTS 6-2

Page

6.3 OPERATION OF CONSTANT-TENSION HYDRAULIC HOIST 6-3

6.3.1 Startup 6-3
6.3.2 Reeling in Cable 6-4
6.3.3 Relieving Cable Tension 6-4
6.3.4 Reeling Off Cable 6-4

6.4 EMERGENCY LOWERING OF LOADS 6-4

6.5 SIGNALING 6-5

6.6 SLACK-CABLE PROTECTION SYSTEM 6-6

6.6.1 Causes of Slack Condition 6-6
6.6.2 Description and Operation of System 6-6
6.6.3 Operation of Hoists During Conditions When Cable Might Go Slack 6-7
6.6.4 Slack-Bar Override in Emergency 6-8
6.6.5 Checking the Slack Cable Protection System and the Altitude Indication Selsyns 6-8

7. ROUTINE TSR-II OPERATING PROCEDURES 7-1

7.1 RESPONSIBILITY 7-1

7.2 PROCEDURES 7-2

7.2.1 Preoperational Checkouts 7-2
7.2.2 Startup of Cooling System 7-3
7.2.3 Personnel Safety Precautions 7-4
7.2.4 Reactor Startup 7-7
7.2.5 Establishing Power Level 7-9
7.2.6 Power Calibration 7-10
7.2.7 Scheduled Shutdown 7-10
7.2.8 Unscheduled Shutdown 7-11

8. TSF EMERGENCY PROCEDURES 8-1

8.1 COMMUNICATIONS 8-1

8.1.1 Telephone System 8-1
8.1.2 Radio - Transmitter and Receiver 8-1
8.1.3 Public Address System 8-2

8.2 EMERGENCY EQUIPMENT 8-2

8.3 NONNUCLEAR ACCIDENTS. 8-2

8.3.1 Fires 8-3
8.3.2 Nonfire Accidents 8-6

Page

8.4 ACCIDENTS INVOLVING POTENTIAL RADIATION OR CRITICALITY HAZARDS 8-8

8.4.1 Jamming Reactor Shutdown Devices During Operation 8-8
8.4.2 Reactor Handling Devices Fails to Operate 8-8
8.4.3 Reactor is Damaged 8-9

8.5 NUCLEAR ACCIDENTS 8-9

9. SUMMARY OF SURVEILLANCE REQUIREMENTS FROM THE TSR-II TECHNICAL SPECIFICATIONS 9-1

9.1 REACTIVITY 9-1

9.2 REACTOR CONTROL AND SAFETY SYSTEMS 9-1

9.3 REACTOR COOLING SYSTEM. 9-2

9.4 SHIM-SAFETY PLATE RESPONSE TIMES 9-3

9.5 HOIST SLACK-LINE PROTECTION DEVICES 9-3

9.6 INSTRUMENTATION FOR PERSONNEL RADIATION PROTECTION 9-3

9.7 PERSONNEL RADIATION PROTECTION SYSTEM. 9-4

9.8 LIMITATIONS ON EXPERIMENTS 9-4

9.9 MINIMUM STAFF REQUIREMENTS 9-5

9.10 ACTION TO BE TAKIN IN THE EVENT A SAFETY LIMIT IS EXCEEDED 9-5

9.11 ACTION TO BE TAKEN IN THE EVENT OF AN ABNORMAL OCCURRENCE 9-6

9.12 ADDITIONAL REPORTING REQUIREMENTS. 9-8

9.13 REVIEW REQUIREMENTS. 9-8

9.13.1 Engineering Physics Division Safety Review Committee (EPDSRC) 9-8
9.13.2 Reactor Operations Review Committee (RORC) 9-8
9.13.3 Criticality Review Committee 9-8

9.14 LIMITATIONS ON REACTOR OPERATION 9-8

9.15 HOIST OPERATION REQUIREMENTS 9-9

Page

9.16 TOWER INTEGRITY 9-9

10. TSR-II MAINTENANCE, CALIBRATION, CHECKS, AND INSPECTION. . . . 10-1

10.1 CALIBRATIONS. 10-1

10.1.1 Regulating Plate Calibration. 10-1
10.1.2 Shim-Safety Plate Response Times. 10-2
10.1.3 Calibration Checks of Picoammeter 10-4

10.2 CHECKS. 10-5

10.2.1 Checking Safety Channels. 10-5
10.2.2 TSR-II and Personnel Protection Checks. 10-7

10.3 INSPECTION. 10-10

10.3.1 Daily Inspections 10-10

10.4 MAINTENANCE 10-12

10.4.1 Maintenance Scheduling. 10-12
10.4.2 Tag-Out Precautions 10-12
10.4.3 Instrumentation and Controls Maintenance Schedule. 10-13
10.4.4. Maintaining Reference Fluid in Variable Base-Pressure Regulator 10-14

11. REACTOR ASSEMBLY, DISASSEMBLY, AND CRITICAL EXPERIMENTS. . . . 11-1

11.1 INTRODUCTION. 11-1

11.2 REACTOR DISASSEMBLY NECESSARTY TO REMOVE A CONTROL MECHANISM HOUSING 11-1

11.2.1 Preparation and Disassembly Prior to Removal of Upper Fuel Elements 11-2
11.2.2 Removal of Upper Fuel Elements. 11-3
11.2.3 Procedure for Removal of a Control Mechanism Housing 11-4

APPENDIX A: Tower Shielding Facility Check Sheets. A-1

APPENDIX B: Description and Abbreviated Nomenclature for Outer Shields and Reflectors B-1

LIST OF FIGURES

		Page
1.1	Tower Shielding Facility	1-2
2.1	Organization chart for Tower Shielding Reactor operating staff	2-2
2.2	Tower Shielfing Facility organization chart	2-3
3.1	Map of cities and counties surrounding TSF area	3-2
3.2	Area topography, TSF, ORNL	3-3
3.3	Site plan, TSF, ORNL	3-4
3.4	Underground control building, TSF, ORNL	3-5
3.5	Trimetric view, TSF, ORNL	3-7
3.6	Reactor and shielding handling pool, TSF, ORNL (schematic)	3-10
3.7	Reactor and shielding handling pool, TSF, ORNL	3-11
4.1	Tower Shielding Reactor II (vertical section)	4-2
4.2	TSR-II elements assembleld in a quarter sphere [a, inside view; b, external view]	4-3
4.3	Control mechanism housing	4-5
4.4	TSR-II control mechanism (a, control plate in picked-up position; b, after scram)	4-7
4.5	TSR-II shield configurations Cool-I and Cool-II	4-11
4.6	Control logic diagram of control system	4-13
4.7	Control logic diagram of gate-door interlocks and slow scram circuits	4-14
4.8	TSR-II solenoid shutdown valve	4-18
4.9	Reactivity worth of all TSR-II shim plates	4-19
4.10	Reactivity worth of the TSR-II regulating plate	4-20
4.11	Primary protection system	4-25
4.12	Slow scram system	4-26
4.13	Water system	4-28
4.14	Base pressure regulating system	4-31
4.15	Reactor support platform	4-34
4.16	Reactor platform suspension arrangement (TSR-II in beam shield)	4-35
4.17	TSR-II Beam Shield and reactor shelter	4-36
4.18	Top view of Tower Shielding Facility Reactor and large beam collimator geometry	4-37
5.1	TSR-II water circuits	5-3
5.2	Elevations of certain components of water system	5-4
5.3	Demineralizer water circuits	5-13
10.1	Specific gravity of liquid as a function of temperature	10-15
10.2	Minimum necessary base pressure and reference pressure as a function of sling bar elevations	10-17
10.3	Schematic of TSR-II base pressure regulator	10-19

LIST OF TABLES

Page

4.1 Protection and control functions. 4-15

9.1 Minimum instrumentation required for reactor startup and operation in normal and low-flow modes. 9-2
9.2 Safety limits 9-6
9.3 Limiting safety system settings 9-7

B.1 Materials used in various reflector and shaped-plug configurations. B-3

1. INTRODUCTION

Table of Contents

		Page
1.	INTRODUCTION	1-1
	1.1 DESCRIPTION OF TOWER SHIELDING FACILITY	1-1
	1.2 PURPOSE	1-1
	1.3 PROCEDURES FOR CHANGING THE MANUAL	1-3

1. INTRODUCTION

1.1 DESCRIPTION OF TOWER SHIELDING FACILITY

The Tower Shielding Facility (TSF) was built in 1954 to meet the requirement by the Aircraft Nuclear Propulsion Project for a reactor radiation source which could be located in a region free from ground or structure scattering. Although the ANP Project has long since been terminated, the remarkable versatility and usefulness of the TSF continues to make it a valuable tool in shielding research; for example: verification of analytic methods and data for shielding applications and the direct measurement of the shielding effectiveness for advanced shield designs.

Three reactors have been operated while suspended from the towers. The original reactor, known as the Tower Shielding Reactor I, was a box-shaped 500-kW MTR type reactor. For an interim period beginning in 1958, the Aircraft Shield Test Reactor (ASTR) replaced the TSR-I. In 1960, the TSR-I was replaced by a spherically symmetric reactor, the TSR-II, which can be operated at 1 MW and which more closely simulates the idealized spherical reactor used as a basis for machine calculations. In 1967, the TSF-SNAP reactor was added to be used alternately with the TSR-II for shielding studies but with an independent suspension system. The TSF-SNAP reactor was removed from the TSF in 1973.

The facility consists of four 315-ft-high towers erected on the corners of a 100- by 200-ft rectangle (see Fig. 1.1). Two of the towers are used for suspending the reactor; the other two, as well as the bridges which connect each pair of towers, can be used for supporting other equipment, such as secondary shields and detectors and shipping casks for cask drop tests. A reinforced-concrete handling pool provides shielding during shield changing and reactor servicing for the water-moderated reactors. The operating crew and the control equipment are housed in underground buildings near the tower array.

1.2 PURPOSE

This manual is intended to delineate, in accordance with Laboratory Policy and Procedures, a safe manner of operating and maintaining the reactors and their auxiliary equipment. To that purpose are given detailed descriptions of the reactor; the associated equipment such as the towers, the hoisting equipment, the reactor cooling system, and other auxiliary equipment; procedures for routine and nonroutine operation of

ORNL -PHOTO 63631

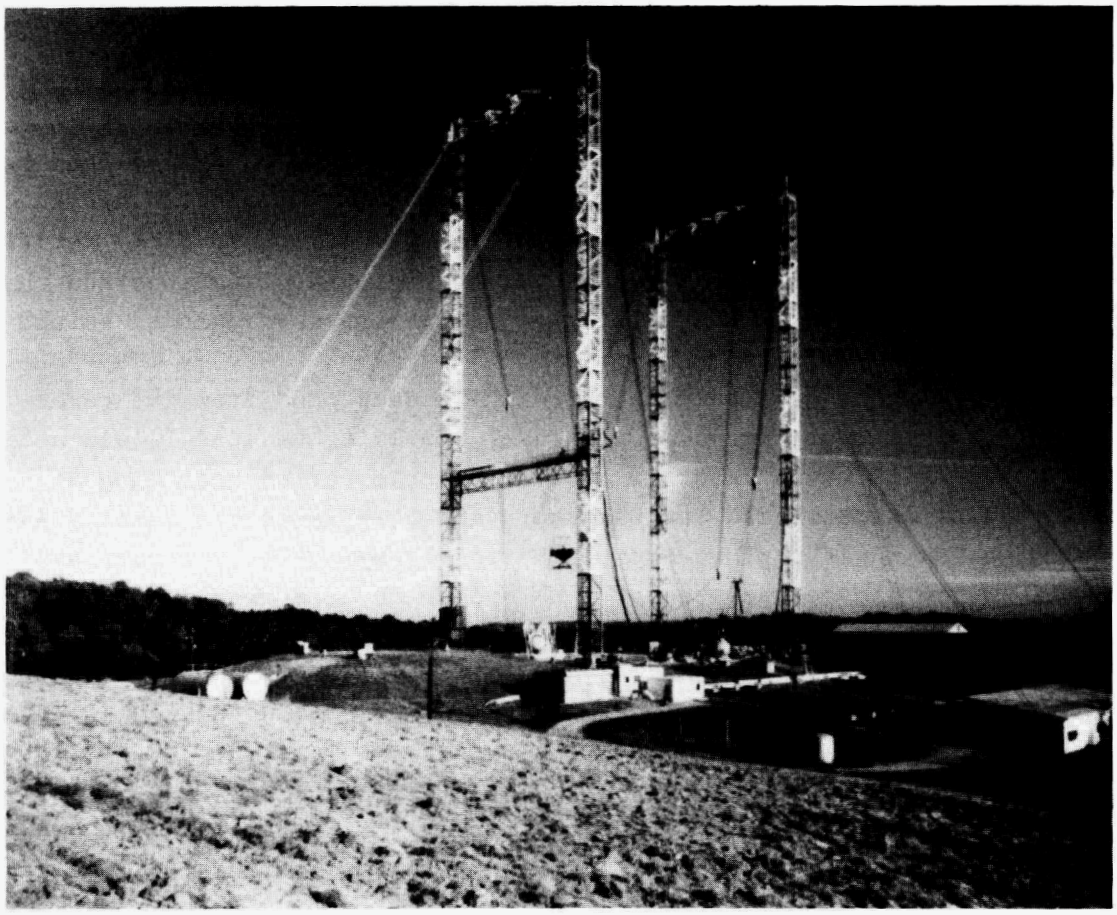

Fig. 1.1. Tower Shielding Facility.

the TSR-II and auxiliary equipment and checklists where applicable; a general outline of emergency procedures; Technical Specification surveillance requirements; and maintenance schedules as well as procedures for approving alterations.

1.3 PROCEDURES FOR CHANGING THE MANUAL

Permanent procedure changes must be formally written and approved by at least two of the following senior staff members:

1. Operations Division Director,
2. Reactor Operations Section Head,
3. TSF-HPRR Operations Supervisor, and
4. Senior Reactor Operator.

Temporary procedure changes that do not alter their original intent shall be made, when required, by issuing special operating instructions. Such special operating instructions shall be approved by two senior reactor operators.

2. FACILITY ADMINISTRATION

Table of Contents

		Page
2.	FACILITY ADMINISTRATION	2-1
2.1	ORGANIZATION	2-1
2.1.1	Reactor Operations Section Head	2-1
2.1.2	Group Leader, Shielding Group	2-1
2.1.3	Supervisor, Reactor Operations TSF-HPRR Areas	2-1
2.1.4	Experiment Supervisor	2-1
2.1.5	Training Coordinator	2-4
2.1.6	TSF Shift Supervisor	2-4
2.1.7	Health Physics and Safety Personnel	2-4
2.1.8	Experiment Personnel	2-5
2.1.9	Senior Reactor Operators	2-5
2.1.10	Reactor Operators	2-5
2.1.11	Plant and Equipment Field Engineer	2-5
2.1.12	Plant and Equipment Foreman	2-5
2.1.13	Reactor Controls Design Engineer	2-5
2.1.14	Reactor Controls Field Engineer	2-6
2.1.15	Instrument Technicians	2-6
2.2	TRAINING AND CERTIFICATION OF PERSONNEL	2-6
2.2.1	Reactor Operator	2-6
2.2.2	Senior Reactor Operator	2-7
2.2.3	Recertification of Personnel	2-8
2.3	OPERATION AND MAINTENANCE RECORDS	2-9
2.3.1	Routine Checkout and Operations Records	2-9
2.3.1.1	TSF log	2-9
2.3.1.2	End-of-shift checks	2-10
2.3.1.3	Daily checks	2-10
2.3.1.4	Weekly checks	2-10
2.3.1.5	TSR-II and personnel protection operational checks	2-10
2.3.1.6	Operation log sheet	2-10
2.3.1.7	Summary of system readings	2-10
2.3.1.8	Special logs	2-11
2.3.2	Experiment Review and Approval	2-11
2.3.3	Change Memoranda	2-11
2.3.3.1	Reactor protection and operation system changes	2-11
2.3.3.2	TSF design change	2-11

2.3.4 Maintenance Records 2-12

2.3.4.1 Instrumentation and Control maintenance records 2-12
2.3.4.2 Plant and Equipment maintenance records 2-12

2.3.5 Calibration, Inspection, and Test Data 2-12
2.3.6 Operator Training and Certification Records . . . 2-13

2. FACILITY ADMINISTRATION

2.1 ORGANIZATION

The TSF is an experimental facility that is operated on a demand basis. Operation of the facility's reactor and its auxiliary equipment is the responsibility of the Director of the Operations Division. The experimental program and the scheduling of operation are responsibilities of the Director of the Engineering Physics and Mathematics Division. The administrative organization for reactor operation is shown in Fig. 2.1 and the administrative organization for facility operation, including support by other service and technical organizations of ORNL, is shown in Fig. 2.2.

2.1.1 Reactor Operations Section Head

The Reactor Operations Section Head is responsible for the operation and maintenance of the reactors operated by the Operations Division and also is responsible for implementing modifications to the reactor and all of its auxiliary equipment.

2.1.2 Group Leader, Shielding Group

The Group Leader is responsible for establishing programs of shielding experiments, for presenting the programs to the Engineering Physics and Mathematics Division Safety Committee for review, for overall scheduling and carrying out of the experimental program, and for analysis and publication of data obtained. The Group Leader is also responsible for design of modifications to the reactor and/or reactor shield to expedite the acquisition of data in the research program.

2.1.3 Supervisor, Reactor Operations TSF-HPRR Areas

The Supervisor is responsible for preparing operating and maintenance procedures for the reactor and facility and for seeing that personnel carry out their assigned duties according to Laboratory and TSF Procedures.

2.1.4 Experiment Supervisor

The Experiment Supervisor is responsible for preparing data plans for conducting shielding experiments and reporting the data taken; for providing operating instructions concerning experiments; for scheduling

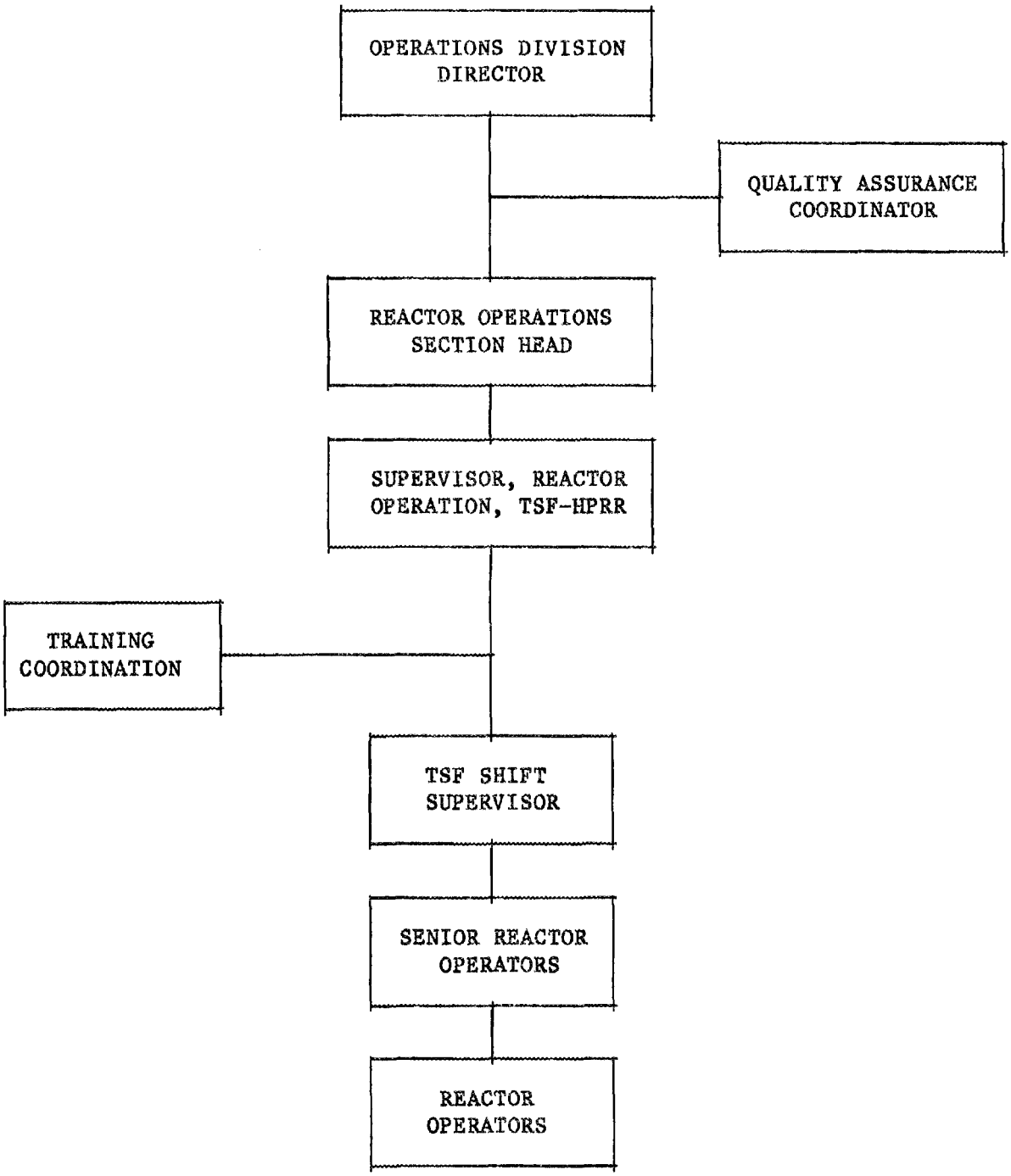

Fig. 2.1. Organization chart for Tower Shielding Reactor operating staff.

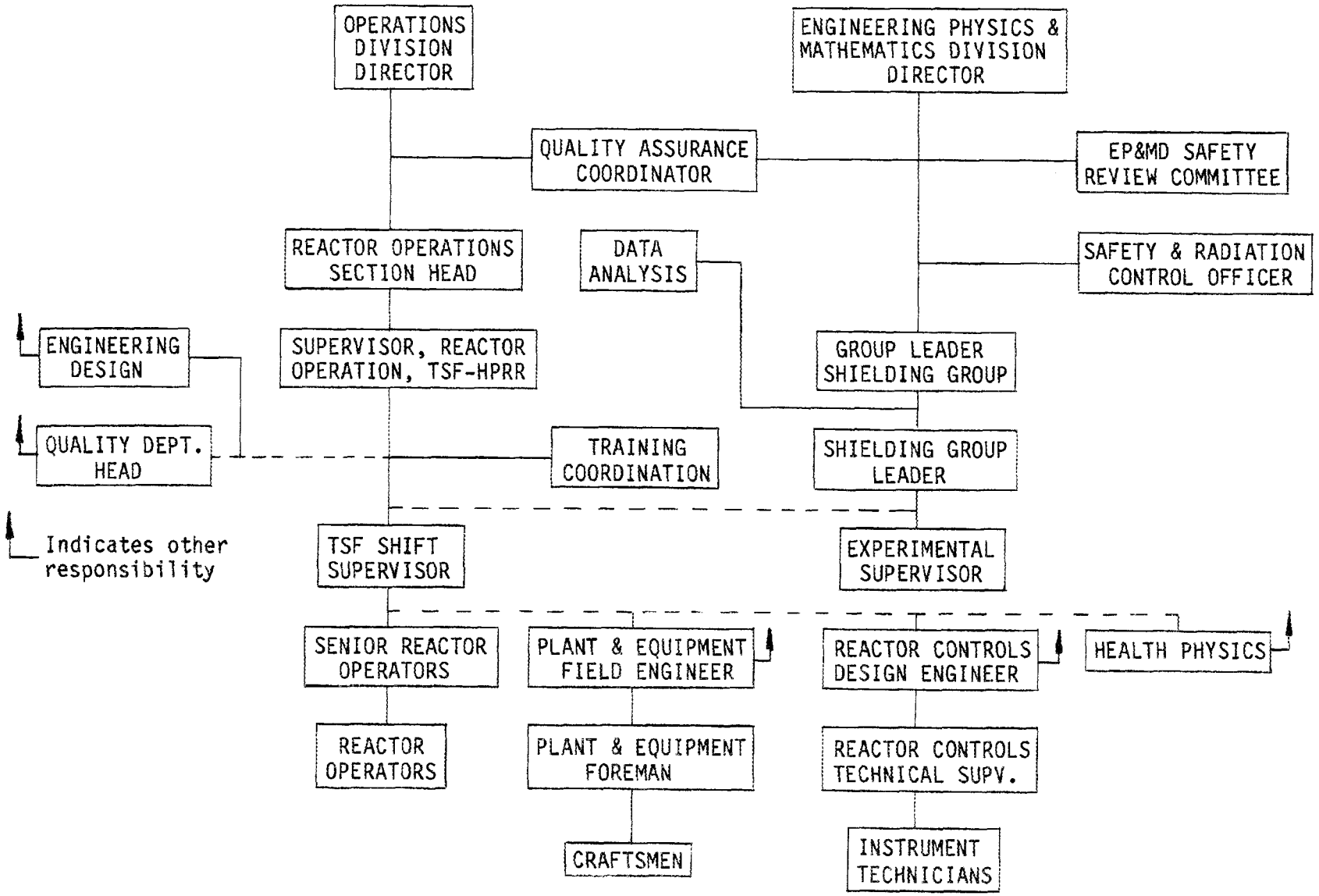

Fig. 2.2. Tower Shielding Facility organization chart.

the day-to-day duties connected with an experimental program; and for arranging for routine maintenance. The Experimental Supervisor is also responsible for procurement and proper maintenance of the radiation detectors and electronic equipment necessary to conduct the experiments.

2.1.5 Training Coordinator

The operating staff establishes a training program, in accordance with DOE and Operations Division requirements, for Reactor Operators and Senior Reactor Operators so that material for operators and trainees is covered at scheduled intervals. An Operations Division training coordinator administers written and oral examinations, grades examinations, keeps a file, and reports results of examinations to the Director of the Operations Division.

2.1.6 TSF Shift Supervisor

The TSF Shift Supervisor must be a Senior Reactor Operator and is responsible for carrying out the scheduled program and for the accuracy of the data taken on the shift. The Shift Supervisor is also responsible for maintaining schedules of the necessary calibrations, inspections, tests, and preventive maintenance; for seeing that the various tasks are completed as scheduled; for keeping records of the work performed; for seeing that recommendations for necessary repairs, maintenance, or replacements are directed appropriately; for changing the schedules as the experiment or new requirements demand; and for writing reports covering the operation of the reactor and the facility. In the event of an emergency, the Shift Supervisor has the responsibility and the authority to take the necessary remedial action. The Shift Supervisor checks the integrity and operability of new or replacement items for the reactor and mechanical equipment for experiments and develops new equipment for the reactor and experimental program as needed. In the Shift Supervisor's absence, the Supervisor of Reactor Operations, TSF-HPRR Areas, is responsible for the reactor and associated equipment.

2.1.7 Health Physics and Safety Personnel

The Health Physics and Safety Personnel are responsible for auditing radiation monitoring of operations and for advising operating and experimental personnel on the safe conduct of the operations.

2.1.8 Experiment Personnel

The experiment personnel are responsible for maintenance, calibration, and operation of detectors and electronic equipment used to acquire data. They are also responsible for setting up and changing the experimental configurations.

2.1.9 Senior Reactor Operators

The Senior Reactor Operators are responsible for maintenance and safe operation of the reactor and facility in accordance with written Laboratory and TSF procedures.

2.1.10 Reactor Operators

The Reactor Operators operate the reactor and reactor handling equipment on any routine data-taking shift in accordance with written Laboratory and TSF procedures, assist the Senior Operator in the assembly and disassembly of the reactor and shields, and carry out experimental programs.

2.1.11 Plant and Equipment Field Engineer

The Field Engineer coordinates efforts of Engineering, Plant and Equipment, and Quality Department personnel in regard to construction, maintenance, etc., at or for the TSF, and recommends improvements in operating equipment, maintenance, etc.

2.1.12 Plant and Equipment Foreman

The Foreman supervises the P&E craft personnel assigned to the TSF and others he schedules as needed for the installation, maintenance, and inspection of the reactor and its associated equipment, the experimental equipment, and other equipment necessary for operation of the facility.

2.1.13 Reactor Controls Design Engineer

The Design Engineer is responsible for the design of all changes in the reactor control system, submits Reactor Control Change Notices, and recommends changes in the reactor control system as new equipment is available.

2.1.14 Reactor Controls Field Engineer

The Field Engineer supervises instrument technicians in the installation, inspection, calibration, and maintenance of detectors and electronic equipment, sees that first priority is given to maintaining the reactor in a safe operating condition and that second priority is given to maintaining the current experimental program, and sees that necessary records are kept.

In regard to reactor maintenance, the Field Engineer is responsible for the work being carried out in accordance with written procedures and for alterations being made only with the prior consent of the Director of the Operations Division and the Superintendent of the Reactor Controls Department of the Instrumentation and Controls Division.

2.1.15 Instrument Technicians

The technicians perform routine maintenance of all existing electronic equipment and install new equipment under the supervision of the Reactor Controls Field Engineer. Routine maintenance on the reactor controls consists of one-to-one replacement of defective parts at the discretion of the Reactor Controls Field Engineer or the Shift Supervisor.

2.2 TRAINING AND CERTIFICATION OF PERSONNEL

New personnel must attend Laboratory orientation courses in health physics and job safety as soon as they are scheduled. They will be assigned to work with trained personnel in the organization and be given increasing amounts of responsibility based on their response to on-the-job training. For training records, see Section 2.3.6.

2.2.1 Reactor Operator

To be accepted as a trainee for reactor operation, an individual must have a college degree or a Laboratory-recognized equivalent. The training will include a series of study sessions covering the material outlined in ORNL/TM-9785 and on-the-job training. On-the-job training will proceed concurrently with the study sessions under the direction of the Senior Reactor Operator. To qualify as an operator, an individual must first complete, to a certified senior operator's satisfaction, the following actions on the Tower Shielding Facility Training Record:

1. Finish the required items on the training checklist.
2. Make the daily checks.
3. Perform prestartup checks, bring the reactor to power, and change the power level.
4. Shut down the reactor routinely and make the end-of-shift checks.
5. Make the weekly checks.
6. Operate the reactor positioning equipment.
7. Demonstrate knowledge of safety and radiation control procedures.

When the above requirements have been met, the Senior Operator will sign the trainee's training record. To be fully qualified, the trainee must achieve a score of 70% or above in each category and an overall score of 80% for the entire written, oral, and operating examination administered by the Operations Division's authorized examiner. He must undergo a medical examination and be certified by the ORNL Health Division. The standards used will be the applicable ones in effect at the time, including 10 CFR, Part 55; US Regulatory Guide 1.134, Rev. 1, March 1979; and ANSI N546, 1976. For an individual to be authorized to operate the reactor, the certification must be signed by the Examiner, the Reactor Operations Section Head, and the Director of the Operations Division.

To maintain certification, an operator must:

1. keep informed of any changes in the facility,
2. operate the reactor quarterly,
3. pass a written examination administered by the Training Coordinator on handling abnormal reactor conditions and emergencies every year,
4. pass written, oral, and operating examinations administered by the Training Coordinator on all subjects in the training guide every two years,
5. have a medical examination at least every two years and be certified by the ORNL Health Division (The standards used will be the applicable ones in effect at the time, including 10 CFR, Part 55, U.S. Regulatory Guide 1.134, Rev. 1, March 1979, and ANSI N546, 1976.), and
6. have a certification signed by the Examiner, the Reactor Operations Section Head, and the Director of the Operations Division.

2.2.2 Senior Reactor Operator

In order for an operator to qualify as a Senior Operator, an individual must demonstrate, to a certified Senior Operator, proficiency in the remaining actions on the training record as follows:

1. Finish all items on the training checklist.
2. Perform the operational checks.
3. Participate in the assembly and disassembly of the reactor, if possible.
4. Demonstrate familiarity with special cooling system procedures.
5. Participate in a critical experiment.

The individual must have had a medical examination in the past two years and be certified by the ORNL Health Division. The standards used will be the applicable one in effect at the time, including 10 CFR, Part 55; U.S. Regulatory Guide 1.134, Rev. 1, March 1979; and ANSI N546, 1976.

When the above requirements have been met, the Senior Operator will sign the individual's training record. The trainee must then pass with a grade of 70% or above in each category and achieve an overall score of 80% for the entire written, oral, and operating examination administered by the Operation Division's authorized examiner. For an individual to be authorized to operate the reactor, the certification must be signed by the Examiner, the Reactor Operations Section Head, and the Director of the Operations Division.

To maintain certification, a Senior Operator must:

1. keep informed of any changes in the facility,
2. operate the reactor quarterly,
3. pass a written examination administered by the Training Coordinator on handling abnormal reactor conditions and emergencies every year,
4. pass written, oral, and operating examinations administered by the Training Coordinator on all subjects in the training guide every two years,
5. have a medical examination at least every two years and be certified by the ORNL Health Division (The standards used will be the applicable ones in effect at the time, including 10 CFR, Part 55, U.S. Regulatory Guide 1.134, Rev. 1, March 1979, and ANSI N546, 1976.), and
6. have a certification signed by the Examiner, the Reactor Operations Section Head, and the Director of the Operations Division.

2.2.3 Recertification of Personnel

If an individual who has been certified as a Senior Reactor Operator or Reactor Operator does not stay informed on the day-to-day condition of

the equipment and experiments for more than three months or has been unable to perform the prescribed duties for that period, the immediate supervisor must reinstate the operator. The supervisor will inform the operator of all equipment and procedural changes, observe performance of routine duties, and if it is satisfactory, indicate on the training record that the individual is reinstated. For absences longer than one year, the individual must be formally recertified.

2.3 OPERATION AND MAINTENANCE RECORDS

The TSF Shift Supervisor is responsible for maintaining a permanent record of the operation and maintenance of the reactor and related equipment and documents relating to the operation and maintenance. Such records will be kept in an orderly fashion, with ease of data retrieval and auditability being major considerations.

In order to maintain a permanent record of the activities of the TSF, as much routine operating information as possible is recorded on checkout sheets and operating log sheets. The remaining information is recorded in the Reactor Operation Log. Maintenance records are kept in card files. Changes in component design are recorded on change memoranda collected in a permanent notebook.

2.3.1 Routine Checkout and Operations Records

A permanent record of the routine operation of the TSR-II is maintained through preservation of the forms used by the Reactor Operators. Samples of these forms are given in Appendix A. Included are the TSR-II Operational Checks, the TSF Personnel Protection Operational Checks, the TSR-II Operation Log Sheets, the End-of-Shift Checks, Facility Daily Checks, and Summaries of Reactor Operational Information. These records are described below. There is also on file an overall data plan for the experiment in progress and the specific instructions for each day.

2.3.1.1 TSF log

As a supplement to the log sheets containing the major portion of the information concerning the operating activities of the reactor, a TSF Log is kept in which chronological entries are made on odd numbered pages concerning unusual occurrences, nonroutine experiments, and any information necessary to the continuity of operation; information which indicates the corrective action taken is entered on the opposite page.

The unusual occurrences mentioned above are defined in Martin Marietta Energy Systems Policy Procedure No. GP-13. Also described are notification, investigation, and reporting requirements.

In some experiments, the details are recorded in the TSF Log rather than on the Reactor Operation Log Sheet. Examples of such experiments are instrument power-level calibrations, level-safety tests, measurement of the reactivity worth of shields, etc.

2.3.1.2 End-of-shift checks

This list serves as a reminder for the Senior Operator for ensuring that all equipment is left in a safe condition.

2.3.1.3 Daily checks

This list is used to record readings and note conditions of equipment at the Facility. It provides the operator with a quick comparison of the day-to-day condition of all operating equipment.

2.3.1.4 Weekly checks

This list is used by the operator to record operations performed or observations made by him and an assistant on a weekly basis.

2.3.1.5 TSR-II and personnel protection operational checks

These lists are used by the Reactor Operator and an assistant to provide a check for the operation of the reactor scrams and personnel safety interlocks (Section 10.3.2).

2.3.1.6 Operation log sheet

An Operation Log Sheet is filled out by the Operator as he checks out and operates the reactor and its cooling system (Sections 7.2.1 and 7.2.2).

2.3.1.7 Summary of system readings

Reactor instrument readings are tabulated daily on a Summary of System Readings Sheet in order to note any slow drift in readings.

2.3.1.8 Special logs

When new components, such as control mechanisms, are being fabricated, bench tests have to be performed at various stages of the work or development. This information is recorded in bound logs for comparison with later work. Only the final results of such work are recorded on the maintenance files when the equipment is placed in service.

2.3.2 Experiment Review and Approval

Experiments will be reviewed by the Engineering Physics and Mathematics Division Safety Review Committee as outlined in Section 9.8. Records of these reviews and operating authorizations will be kept on file at the TSF.

2.3.3 Change Memoranda

For procedural purposes, two types of change memoranda will be issued. One will cover changes in reactor controls handled by TSF and Instrumentation and Controls Division personnel. The other will cover changes to be handled by TSF, Engineering, and Plant and Equipmment Division personnel. Properly signed copies of all change memoranda will be kept on file.

2.3.3.1 Reactor protection and operation system changes

Changes will be made in accordance with Instrumentation and Controls Division Quality Assurance Procedure QA-IC-11, September 13, 1973.

2.3.3.2 TSF design Changes

Any design change description will be outlined in a Mechanical Design Change Memo. The completed form must be approved by the TSF-HPRR Operations Supervisor, a member of the Operations Division Technical Section, the Reactor Operations Section Head, the Head of the Office of Operational Safety, and the Director of the Operations Division. If the change involves a change in the technical specifications, reactor protection system, reactivity control system, engineered safety features, or a safety question not reviewed in the Safety Analysis Report, it must be

reviewed by the RORC and DOE-ORO. The field changes will not be started until the change notice is properly processed and the necessary engineering is completed. Upon completion of the field work required to accomplish the change, the Field Engineer or a TSF Shift Supervisor will sign and date the change notice. He will return marked drawings to the responsible design specialists, noting any deviations to be incorporated into the as-built drawings. The Operations Supervisor will also sign the change notice when revised drawings are issued and when necessary procedure changes are issued.

2.3.4 Maintenance Records

In addition to the information in the TSF log book computer, records will be maintained both for routine and nonroutine maintenance. To minimize unscheduled shutdowns, routine maintenance will be scheduled as outlined in Chapter 10. Records will be maintained to indicate when the work was completed.

2.3.4.1 Instrumentation and Control maintenance records

Computer records will be kept of all abnormalities and subsequent repairs and alterations to the reactor instruments and controls and for equipment closely related to the reactor.

2.3.4.2 Plant and Equipment maintenance records

Computer records will also be kept of all abnormalities and subsequent repairs and alterations to the reactor, its cooling system, the hoisting equipment, and any items in the control building which are directly related to reactor operation.

2.3.5 Calibration, Inspection, and Test Data

Many calibrations, inspections, and tests are required during routine operation and maintenance of the reactor and associated equipment. Records will be kept both to document the completion of such tests and also to preserve the numerical values obtained.

2.3.6 Operator Training and Certification Records

Each individual will maintain a record of training activities. Copies of the individual certification and recertification records will be maintained in the Division Training Coordinator's office.

3. FACILITY DESCRIPTION

Table of Contents

		Page
3.	FACILITY DESCRIPTION	3-1
3.1	SITE DESCRIPTION	3-1
3.2	EXCLUSION FENCING	3-1
3.3	UNDERGROUND BUILDINGS	3-1
3.4	TOWER DESIGN AND FACILITY LAYOUT	3-6
3.4.1	Tower Description	3-6
3.4.2	Guy Cables	3-6
3.4.3	Wind Loading	3-6
3.4.4	Lightning Protection System	3-8
3.5	HOISTING EQUIPMENT	3-8
3.6	REACTOR- AND SHIELD-HANDLING POOL	3-9
3.7	ALTERNATE USE OF THE HANDLING POOL	3-9

3. FACILITY DESCRIPTION

3.1 SITE DESCRIPTION

The Tower Shielding Facility is located on a knoll with an elevation of 1069 ft 2.35 miles south-southeast of ORNL, 6 to 13 miles from the city of Oak Ridge, and 17 to 25 miles from the city of Knoxville (see Fig. 3.1). The Tennessee Valley Authority Melton Hill Dam is located 0.8 mile south of the TSF on the Clinch River, which forms a natural boundary of the restricted area. The nearest ORNL facilities, the Health Physics Research Reactor (HPRR) and the High-Flux Isotope Reactor, are over 6000 ft from the TSF and are separated from it by an offshoot of Copper Ridge and by the highest point of Copper Ridge, respectively (see Fig. 3.2). The immediate terrain on all sides of the tower structure slopes downward at the base of the towers; approximately 400 ft to the north of the towers, the grade gradually rises to the top of Copper Ridge.

3.2 EXCLUSION FENCING

The HPRR and the TSR-II reactors are situated within a general exclusion area (see Fig. 3.2) which is enclosed by a 6-ft-high chain-link fence topped with three strands of barbed wire (called the "perimeter fence"). Additional security is provided by an 8-ft-high chain-link fence topped with three strands of barbed wire which is located on a 600-ft radius. Within the general exclusion area, the TSF and HPRR are separated by a 5-ft-high field-wire fence. Through proper operation of the reactor and continuous monitoring, the radiation levels at the perimeter fence are not allowed to exceed those established as maximum for civilian tolerance.

3.3 UNDERGROUND BUILDINGS

Two reinforced-concrete underground buildings, with inside dimensions of 59 x 30 x 10 ft and 115 x 30 x 10 ft, adjacent to and north of the towers (see Fig. 3.3) provide a shielded working area for personnel during reactor operation. The smaller building (7704) is used primarily as a service and shop area and is connected to the larger building (7702) by an 8-ft-wide walkway. The larger building contains the reactor controls, data-collecting facility, counting room, and offices (Fig. 3.4). The buildings are shielded against radiation by an 18-in.-thick concrete roof covered with 3 1/2 ft of earth. To ensure that air entering the

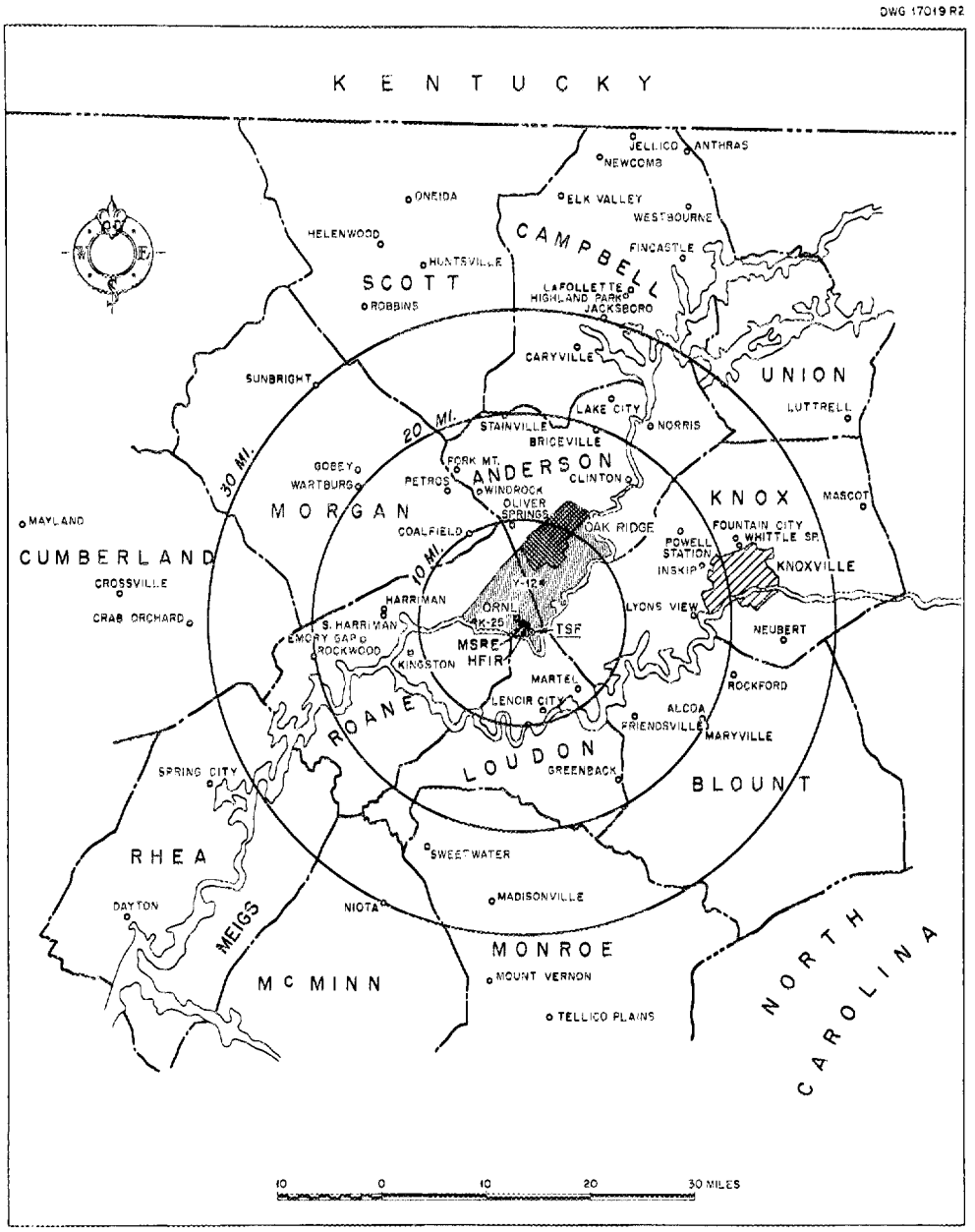

Fig. 3.1. Map of cities and counties surrounding TSF area.

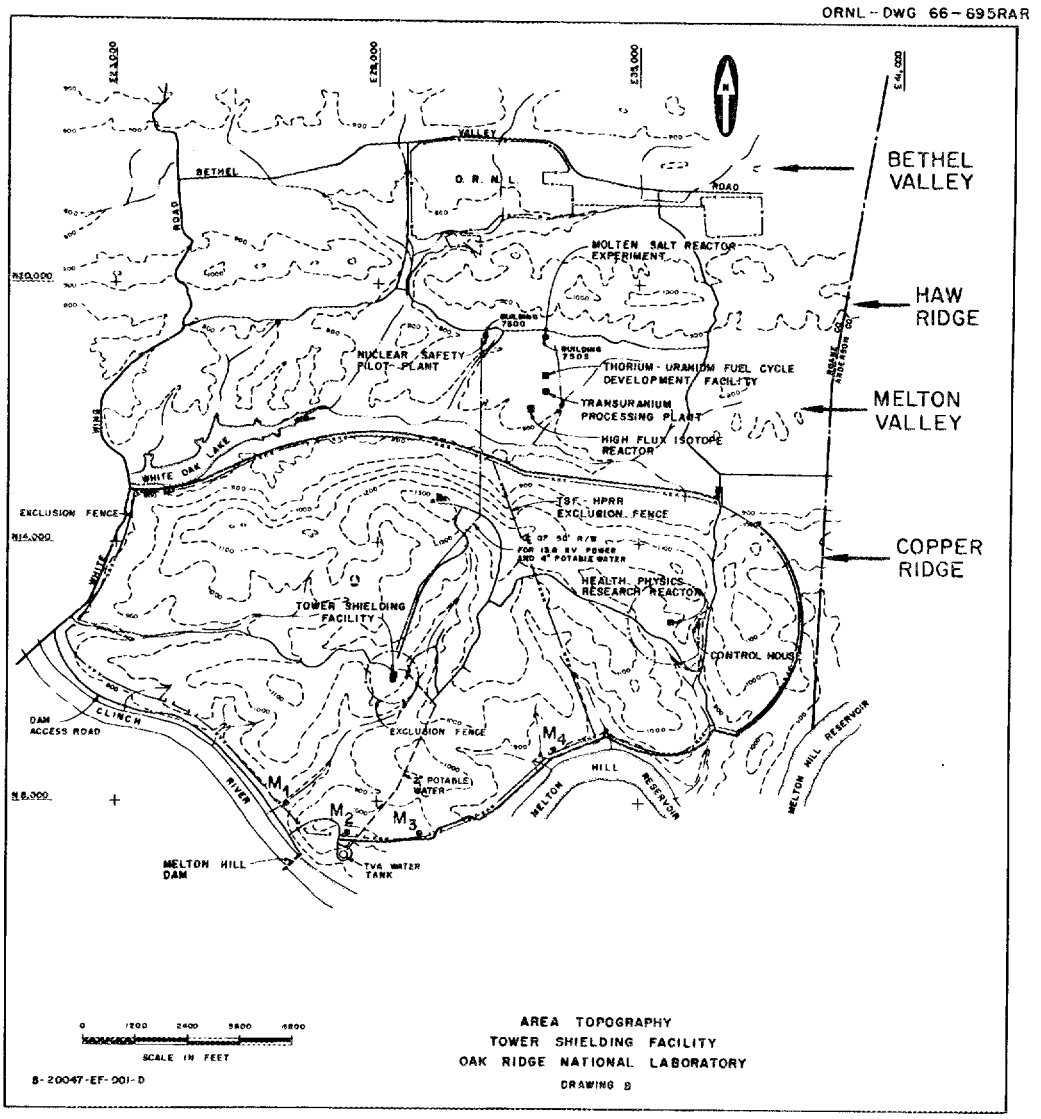

Fig. 3.2. Area topography, TSF, ORNL.

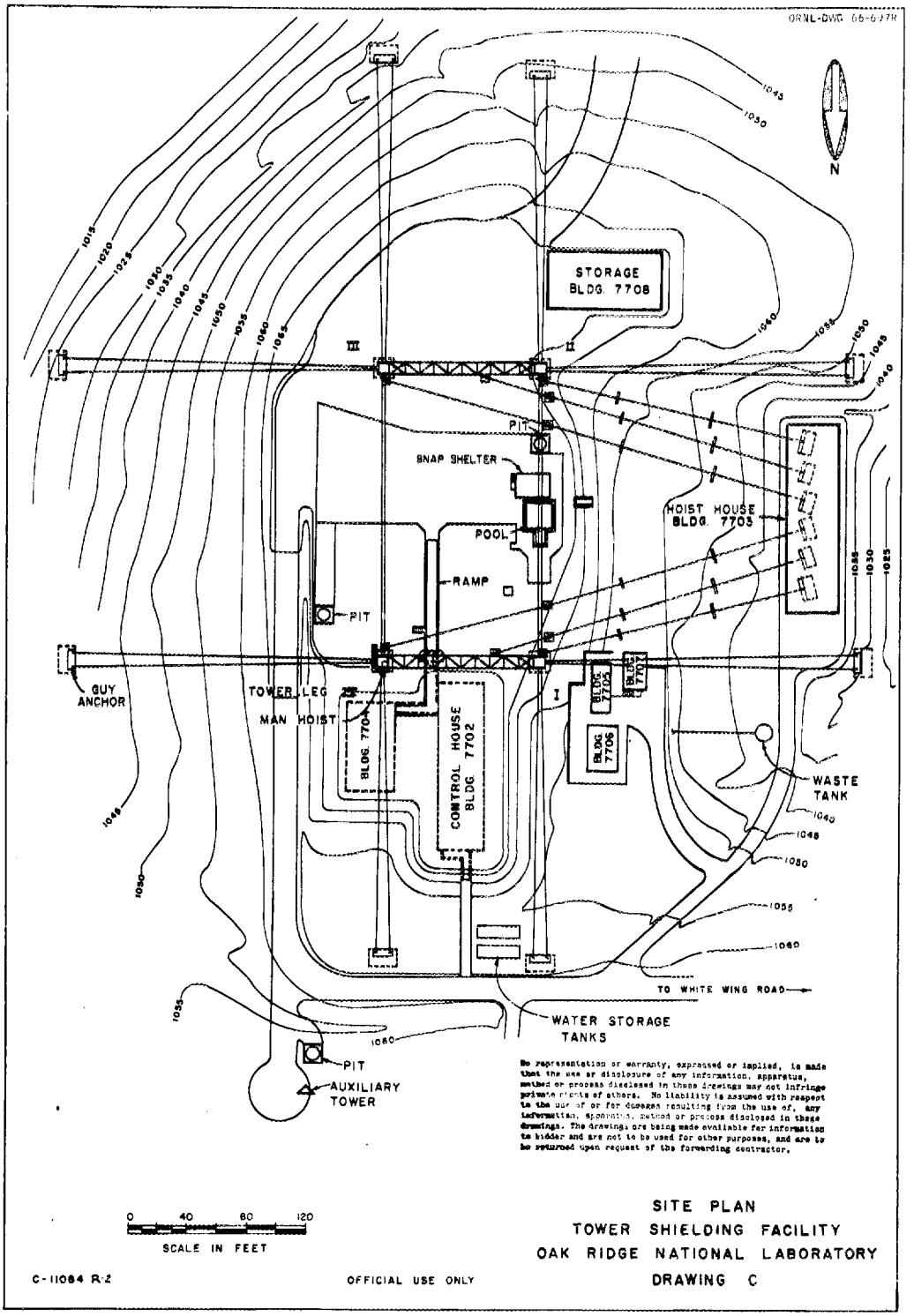

Fig. 3.3. Site plan, TSF, ORNL.

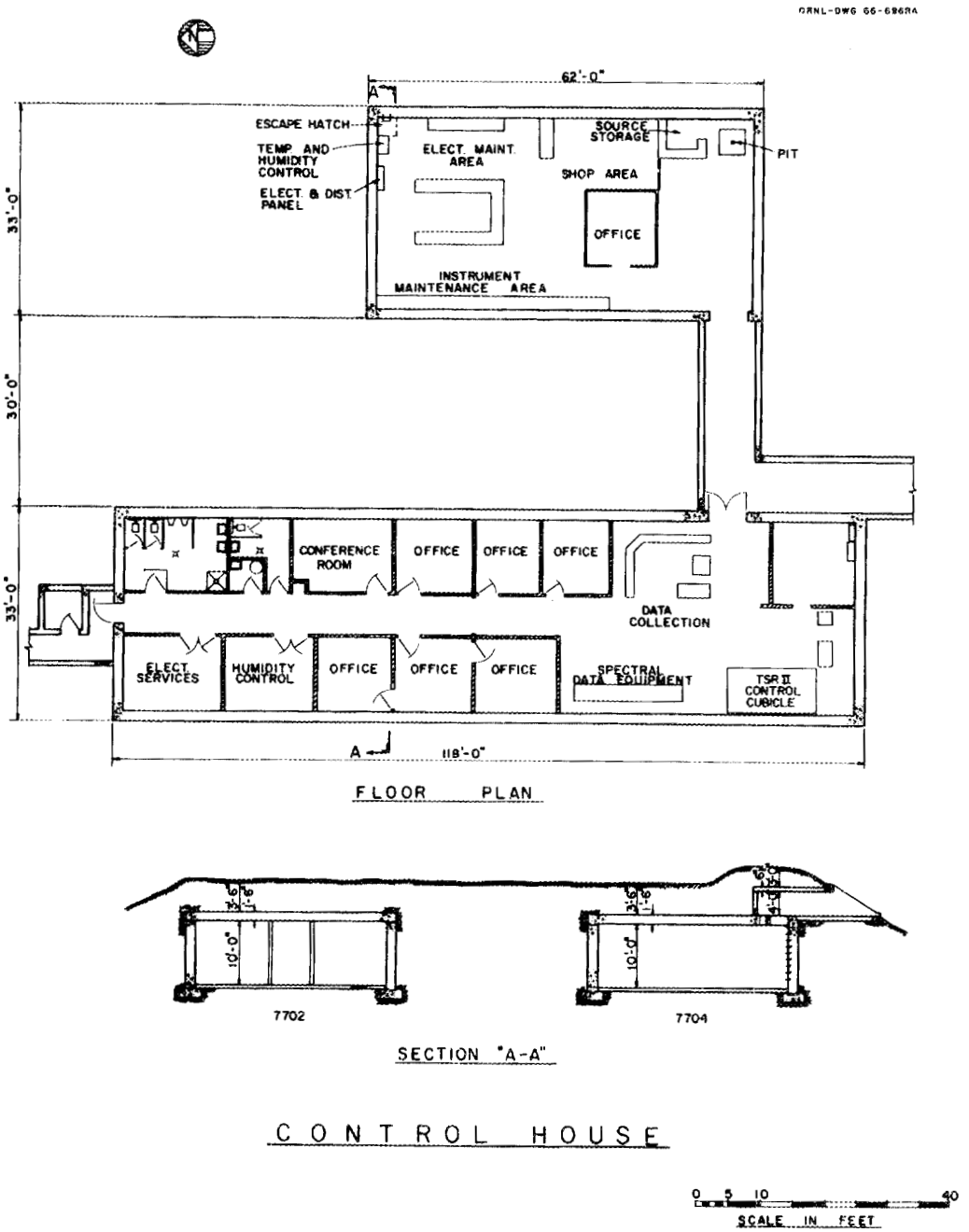

Fig. 3.4. Underground control building, TSF, ORNL.

underground buildings is free from particulate matter and that there is a slightly positive air pressure inside, blowers force air through activated charcoal filters into each building, and the air leaves the buildings through a common duct which has a weighted damper.

3.4 TOWER DESIGN AND FACILITY LAYOUT

3.4.1 Tower Description

The tower structure is a braced and guyed steel frame forming a 100- by 200-ft rectangle, with a column placed at each of the four corners (Figs. 3.3 and 3.5). Each column is 9 ft square by 315 ft high and terminates at the lower end in an inverted truncated pyramid. Since the objective of the design was to minimize the scattering of radiation by structural material, the unit weight of the steel in the tower structure was kept below 400 lb/ft. Each pair of towers is joined at the top by a horizontal truss-type bridge running east and west as shown in the three-dimensional view of Fig. 3.5. Maintenance access is provided by a bridge between legs I and IV of the north tower at the 100-ft level; the bridge is reached by an elevator in leg IV.

3.4.2 Guy Cables

A pair of galvanized plow-steel cables (or sister guys) 2 in. in diam stretches between leg I of the north tower and leg II of the south tower, and another pair stretches between leg IV of the north tower and leg III of the south tower. Each cable of the pair was designed to be held in 40,000-lb tension by two similarly constructed pairs of guys which extend from the top of the towers to ground anchors in the north-south direction. The towers are guyed in the east-west direction by eight inclined guy cables. Each inclined cable was originally set at 76,000-lb tension and makes an angle of 32° with the towers.

3.4.3 Wind Loading

Although the towers were designed to deflect no more than 11 in. during a 105-mph wind and with the maximum loads at altitude, the reactor is not elevated for operation when winds exceed 40 mph.

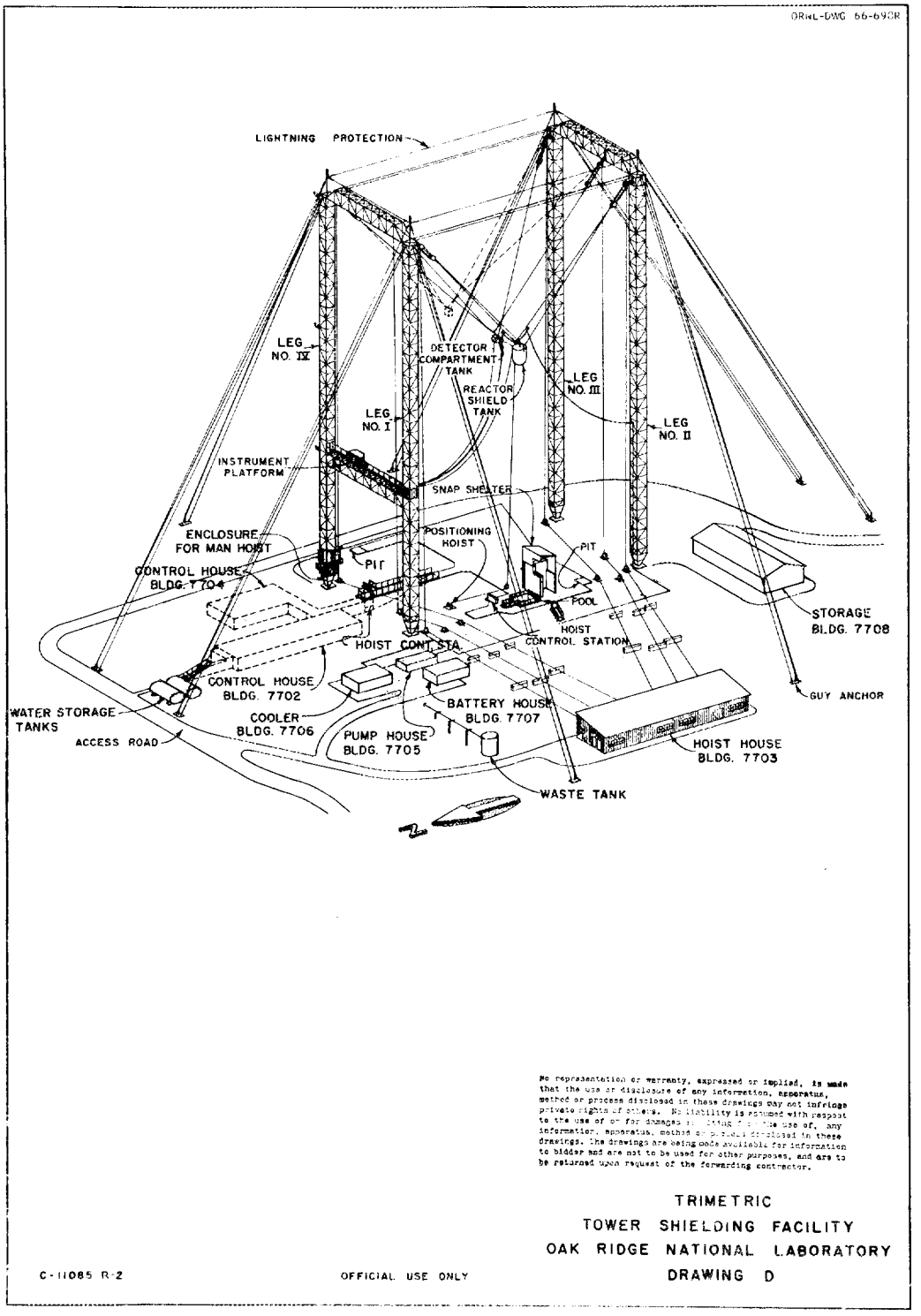

Fig. 3.5. Trimetric view, TSF, ORNL.

3.4.4 Lightning Protection System

The tower structure is completely shielded by means of a wire grounding net. As shown in Fig. 3.5, a copper-clad steel-strand shielding wire is mounted on porcelain insulators to form a rectangle at a 5-ft minimum above the entire structure. Shielding wire also extends from the top of each tower to the ground to protect the inclined guys. The steel towers, the inclined guy wires, and the grounding system are connected to a buried counterpoise. The resistance to the ground of the above-ground grid system is between 1 and 3 ohms.

3.5 HOISTING EQUIPMENT

The equipment for hoisting the TSR-II and for hoisting and positioning other loads consists of six major hoists, designed to be operated in pairs or singly, with the hoist drums and motors located in a hoist house to the west of the towers. The hoisting lines and the necessary ground sheaves, idlers, etc., extend along the ground from the hoist house to the towers and then vertically to fixed multipart sheave blocks near the tops of the columns or on the bridges atop the towers and then down to multipart traveling blocks. The reactor traveling blocks are connected to the loads by pairs of 2-in.-diam cables. Two of the hoists, which can lift 55 tons to an altitude of 200 ft, are used to move the reactor and shield in the plane of the west tower legs (I and II). Another pair of hoists can raise a load of 40 tons to the same altitude in a plane 35 ft east of the plane of legs I and II. The third pair of hoists can lift 30 tons in the plane of the east tower legs (IV and III), or together with the second pair of hoists, can be connected to one 30-ton load so that the load can be positioned at various distances from the reactor. During this type of operation, an auxiliary constant-tension hoist is available to keep the separation distance between the auxiliary load and the reactor constant even if there is oscillatory motion due to winds.

There are two separate and independent hoist control stations: the local control station, which is located in a partially shielded ramp at the south entrance to the underground buildings and has provisions for a closed-circuit television for observing the moving loads, and the remote control station, which is located adjacent to the reactor-handling pool. The hoist controls are designed to provide smooth acceleration and retardation through five speeds upward and four speeds downward and to brake

automatically in case of power failure. In the event of an emergency, an auxiliary battery power source can be operated from either hoist control station to release the brakes and thus lower the loads. The loads and the towers are protected from operator error by limit switches and slack-line switches. Also, moving loads can be observed by television from the reactor control console. Procedures for operating the hoists are given in Chapter 6.

3.6 REACTOR- AND SHIELD-HANDLING POOL

A two-section reinforced-concrete handling pool provides shielding during the removal and storage of fuel elements and the changing of reactor shields. The pool is located midway between the west tower legs; its large section is 20 ft square and 25 ft deep, and its small section is 4 ft wide by 12 ft long by 22 ft deep (Fig. 3.6). Some of the reactor shields have a minimum amount of structural material in the outer surface to minimize unwanted nuclear effects, and these shields can be supported only by "lifting collars." A guided float is installed in the pool for raising and lowering these shields (Fig. 3.7). In order to raise the shields, the float, with the shield in place, is lowered to the bottom of the pool, the TSR-II is suspended above it, and then the float is raised to the reactor and the supporting collars are engaged to lock the shield in place around the reactor. Since maintenance involving the handling of fuel elements occurs so infrequently, the pool is often drained and used for other purposes as noted below.

3.7 ALTERNATE USE OF THE HANDLING POOL

The main portion of the pool is covered by 2-ft-thick concrete slabs. The south slab was previously used to mount the support structure for the TSF-SNAP reactor which was removed from service in June 1973. Two other similar concrete slabs completely cover the remaining portion of the large section of the handling pool except for a 4-ft-diam hole in the center slab. Shields and detectors can be placed in the drained pool to perform shielding studies.

An inclined dam is located in the neck of the pool. An access ladder can be installed on the south side of the dam permitting access to the main portion of the pool even when the neck of the pool is filled with water. With special jigs, the reactor pressure vessel can be supported in the neck of the pool for maintenance or surveillance.

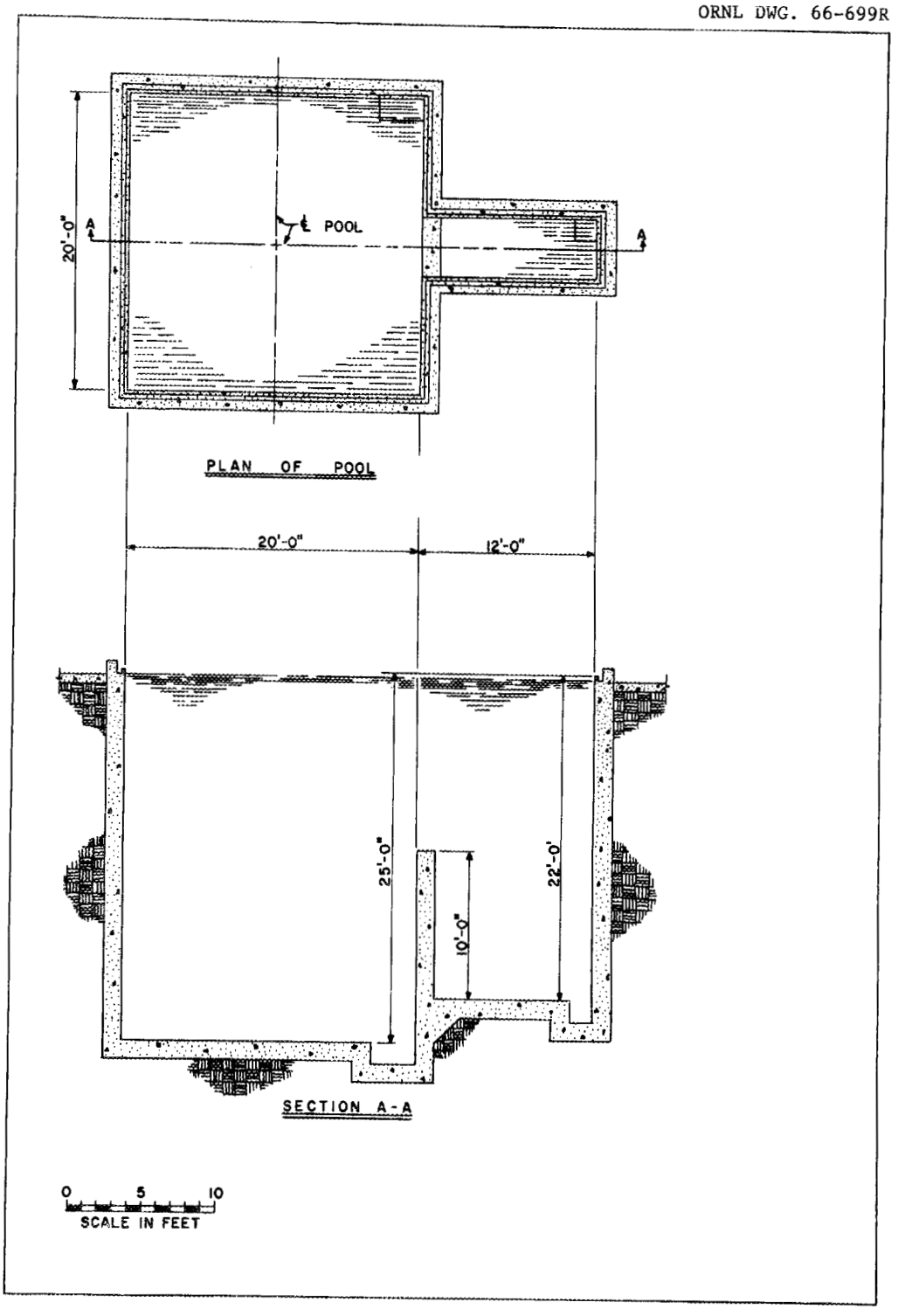

Fig. 3.6. Reactor and shielding handling pool, TSF, ORNL.

Photo 54360

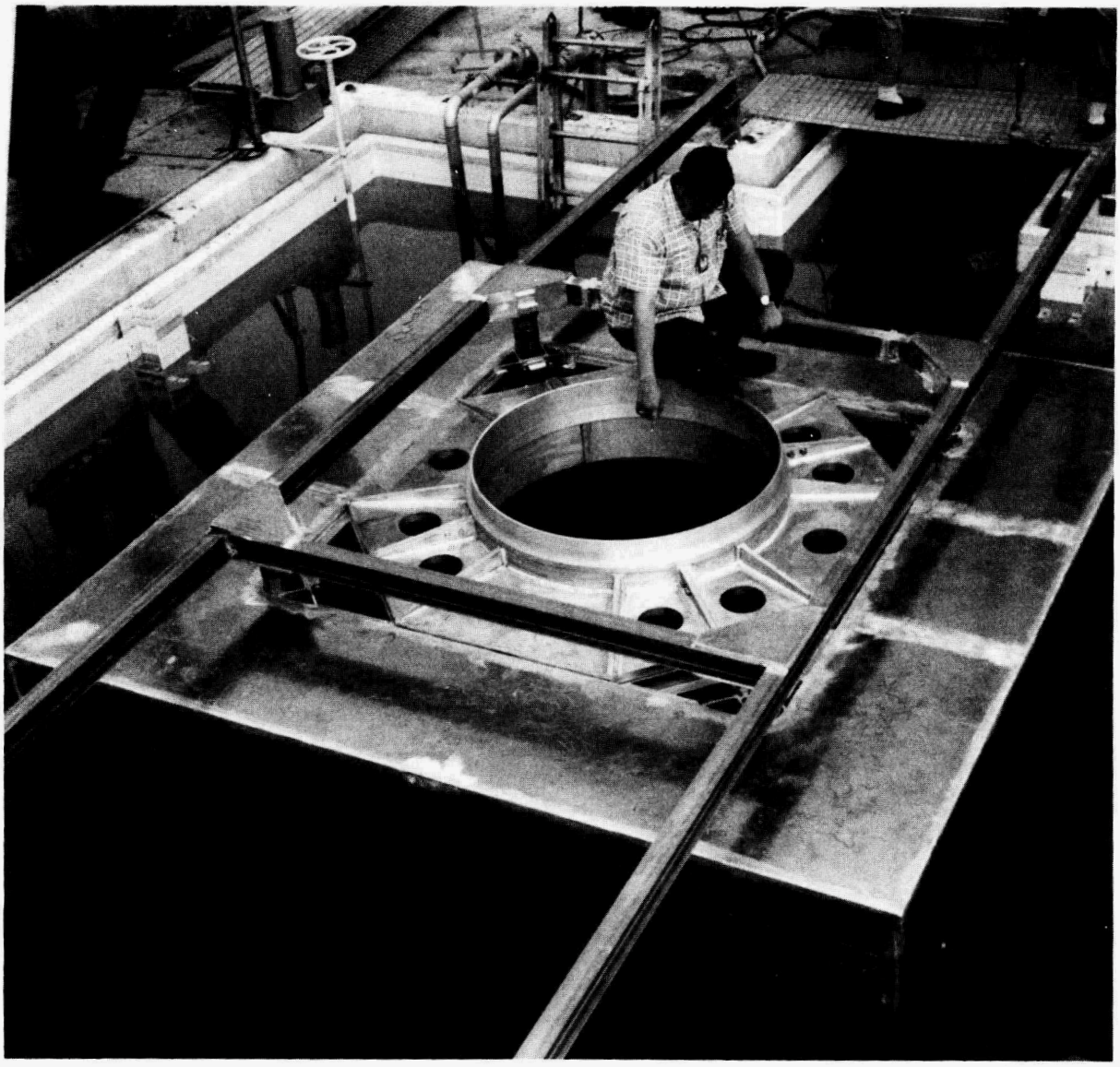

Fig. 3.7. Reactor and shielding handling pool, TSF, ORNL.

4. TSR-II DESCRIPTION

Table of Contents

		Page
4.	TSR-II DESCRIPTION	4-1
4.1	MECHANICAL DESIGN	4-1
4.1.1	Core Region	4-1
4.1.2	Pressure Vessel	4-1
4.1.3	Fuel Annulus	4-1
4.1.4	Fuel Elements	4-4
4.1.5	Control Mechanism Housing	4-4
4.1.6	Control Mechanism	4-6
4.1.7	Fuel Element Mounting	4-9
4.1.8	Outer Reflector Region and Shields	4-10
4.2	INSTRUMENTATION FOR REACTOR OPERATION AND PROTECTION	4-12
4.2.1	Control Logic	4-12
4.2.2	Neutron Flux Readout	4-12
4.2.3	Solenoid Shutdown Valve	4-16
4.2.4	Shim-Safety Plate Reactivity	4-17
4.2.5	Regulating Plate Reactivity	4-17
4.2.6	Shim-Safety Plate Seat Information	4-17
4.2.7	Shim-Safety-Plate Clutch Information	4-21
4.2.8	Plate Position Indicators	4-21
4.2.9	Servomechanism Control	4-21
4.2.10	Instrument Location	4-21
4.2.11	Water Flow Interlocks	4-21
4.2.12	Annunciator System	4-22
4.3	PROTECTION SYSTEM	4-23
4.4	HEAT-REMOVAL SYSTEM	4-27
4.4.1	Main Flow Circuit	4-27
4.4.2	Direct Current Pump for Cooling and Heating	4-29
4.4.3	Reduced Flow Operation	4-29
4.4.4	Shim Pump	4-29
4.4.5	Fill and Pressure Pump	4-30
4.4.6	Variable Pressure Regulating System	4-30
4.4.7	Make-up Water System	4-32
4.4.8	Demineralizer and Waste Disposal	4-32
4.4.9	Water Activity Monitor	4-32
4.5	REACTOR SUSPENSION SYSTEM	4-33
4.6	BIG BEAM SHIELD	4-33

4. TSR-II DESCRIPTION

4.1 MECHANICAL DESIGN

4.1.1 Core Region

The TSR-II core consists of 60-mil-thick curved aluminum-clad uranium-aluminum alloy plates cooled and moderated with light water. The plates are shaped so that the assembled core is a spherical fuel annulus from which the radiation is emitted symmetrically. The neutron-absorbing shim-safety control plates for the reactor are contained in the fuel-free region centered inside the fuel annulus. Outside the fuel annulus is a reflector region, which may contain aluminum-water, lead-boral-aluminum, or other combinations of materials as an experiment demands.

4.1.2 Pressure Vessel

The three regions of the TSR-II core, the internal reflector, the fuel annulus, and the outer reflector, are located in the lower section of a cylindrical aluminum tank with a hemispherical bottom, as shown in Fig. 4.1. This aluminum tank is 8 ft long; its inside diameter at the hemispherical end is 37 in., which is increased to 40 in. at the access end to facilitate removal of fuel elements, shielding, etc., from the tank. The tank was designed, fabricated, inspected, and tested in accordance with the latest published ASME code for unfired pressure vessels.*

4.1.3 Fuel Annulus

The spherical fuel annulus is 5.5 in. thick and 29 in. in outside diam and consists of 21 fuel elements fabricated so that the fuel plates in adjacent elements join to form many concentric cylinders separated by water passages. The spherical contour of the core was accomplished by varying the lengths, widths, and radii of the fuel plates in three types of fuel elements as described below and as shown in Figs. 4.1 and 4.2.

---

*ASME Boiler and Pressure Vessel Code: Section VIII. Unfired Pressure Vessels, Part UNF, revised 1956.

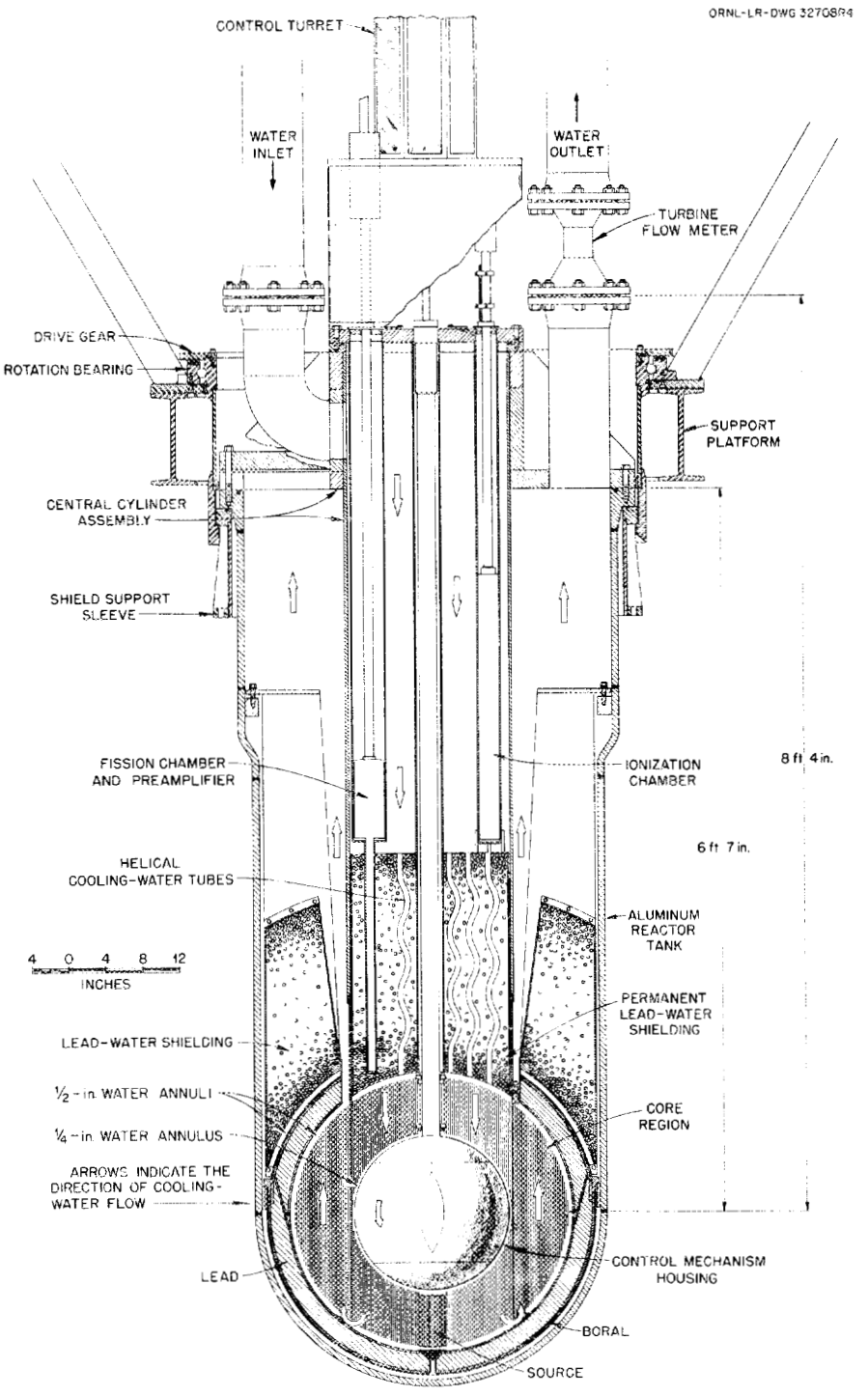

Fig. 4.1. Tower Shielding Reactor II (vertical section).

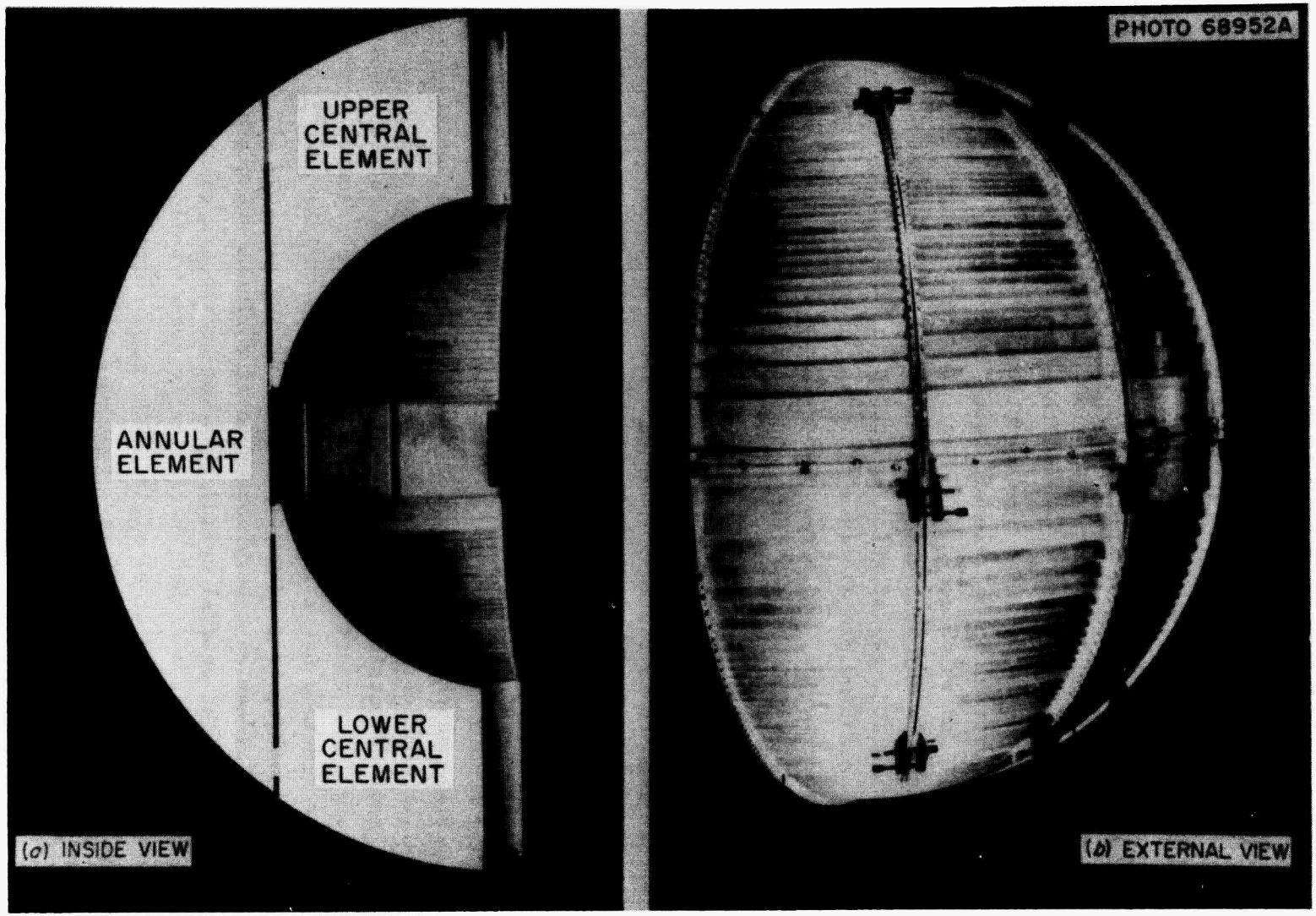

Fig. 4.2. TSR-II elements assembled in a quarter sphere [a, inside view; b, external view].

4.1.4 Fuel Elements

Each fuel plate is 0.060 in. thick (the fuel plate thickness and spacing are basically the same as those of the pool-type Bulk Shielding Reactor) and consists of a sandwich of uranium-aluminum alloy clad in aluminum. Fuel plates with a separation distance of 0.120 in. are peened and welded to aluminum side plates to form elements. Three types of elements are used: annular elements, so called because they form a cylindrical fuel annulus when assembled together; central elements, which are used in the upper and lower sections of the core; and one 3-in.-diam cylindrical "plug" element which is centered in the lower central element and which contains an antimony-boron source [this source will not be used in any subsequent core loadings (see Section 4.1.5)]. The central elements, two of which are shown in Fig. 4.2(a), are contained within a bottomless aluminum cylinder positioned inside the reactor pressure vessel, and the annular elements, shown in Fig. 4.2(b), are held in the region between the central cylinder and the reactor tank. There are twelve annular elements and eight central elements (four upper and four lower). A 1/8-in.-thick fuel-loaded aluminum shell is mounted on the control mechanism housing and is located 1/4 in. inside the elements in the fuel annulus.

4.1.5 Control Mechanism Housing

The internal reflector region is almost completely filled by a 17-in.-diam aluminum sphere which houses five or six neutron-absorbing control plates and the mechanisms for positioning them to operate and shut down the reactor (Fig. 4.3). Four fuel-loaded, lune-shaped covers which are mounted outside the control mechanism housing form a complete spherical shell. A neutron source [the americium-boron source (emission rate of approximately 6.6×10^6 neutrons/s) which will be used in subsequent core loadings] is permanently located in the aluminum structure. The completely assembled sphere mounts on four blocks which are welded on the inside of the central cylinder at the horizontal reactor midplane. Each control plate is a dished, hermetically sealed hollow plate of 1/16-in.-thick stainless steel filled with boron carbide. The total thickness of each plate is 3/4 in. Four or five plates, designated as shim-safety plates, are moved simultaneously relative to the fuel to operate the reactor, but each plate is independently driven toward the fuel, four outward and, in some cases, one downward, to shut down the

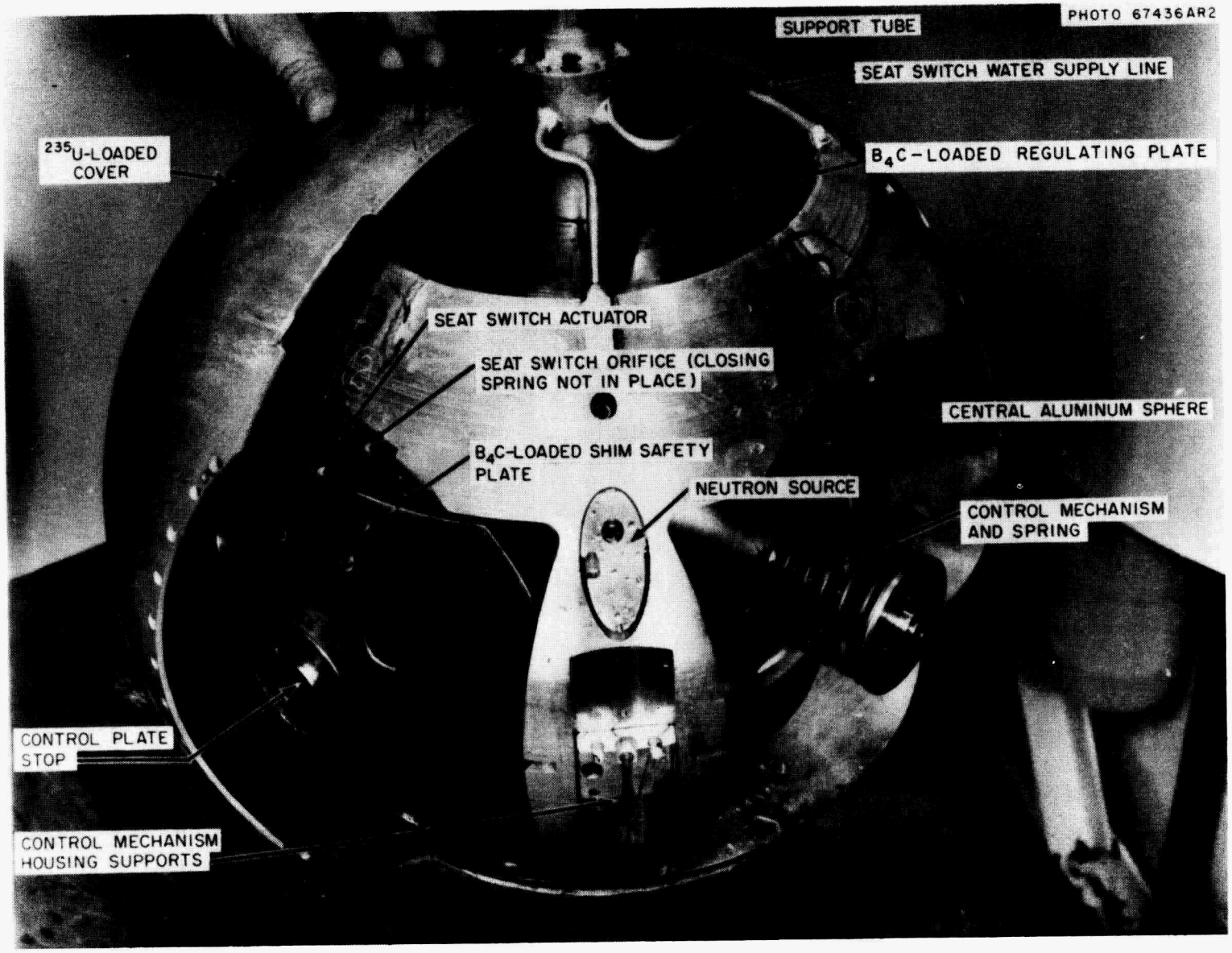

Fig. 4.3. Control mechanism housing.

reactor when the protection system initiates the action. The #5 shim-safety plate, which moves down toward the lower fuel, has been removed and replaced with aluminum to add reactivity to the core to continue operating with the original fuel elements. When this situation exists, the solenoid for this plate is taken out of service, and the flow of water from the shim pump to the control mechanism is stopped so that the aluminum replacing the boron-carbide-loaded plate cannot be moved. The seat switch flow is also cut off in the turret. The remaining plate, which is designated as the regulating plate, moves vertically in the upper region of the sphere and can be servo operated to maintain the reactor power at a constant level. All cavities within the spherical control mechanism housing are filled with water. The reactor is thus controlled by varying the thickness of water between the control plates and the inner surface of the fuel annulus. Movement of the control plates is achieved by a combination of mechanical and hydraulic forces, as described below.

4.1.6 Control Mechanism

In each control mechanism (Fig. 4.4), a throttling action develops a hydraulic pressure differential across a piston to balance a spring force so that a small motor can simultaneously position the shim-safety plates connected to the four or five separate control mechanisms to operate the reactor. The interruption of the water flow producing the pressure differential permits the spring on each mechanism to independently drive its associated plate toward the fuel to shut down the reactor. The design and operation of a control mechanism are described below.

Each shim-safety plate is connected to a piston which moves approximately 1.7 in. along a guide shaft centered in a stainless steel cylinder. A spring which is held with a compressive force of 70 to 90 lb is designed to return the plate to a position adjacent to the fuel to shut down the reactor or to hold it in that position during nonoperating periods. In this position, the piston is at the left end of the cylinder as in view (b) of Fig. 4.4.

Centered inside the guide shaft is a lead screw with a traveling nut which engages a spool through two lengthwise slots in the guide shaft. Thus, the spool can be moved to any position along the guide shaft by proper rotation of the lead screw. Axial holes for water flow preclude the building up of any pressure differential across the spool. A pair of knife edges formed by circumferential V-shaped rings on the hardened

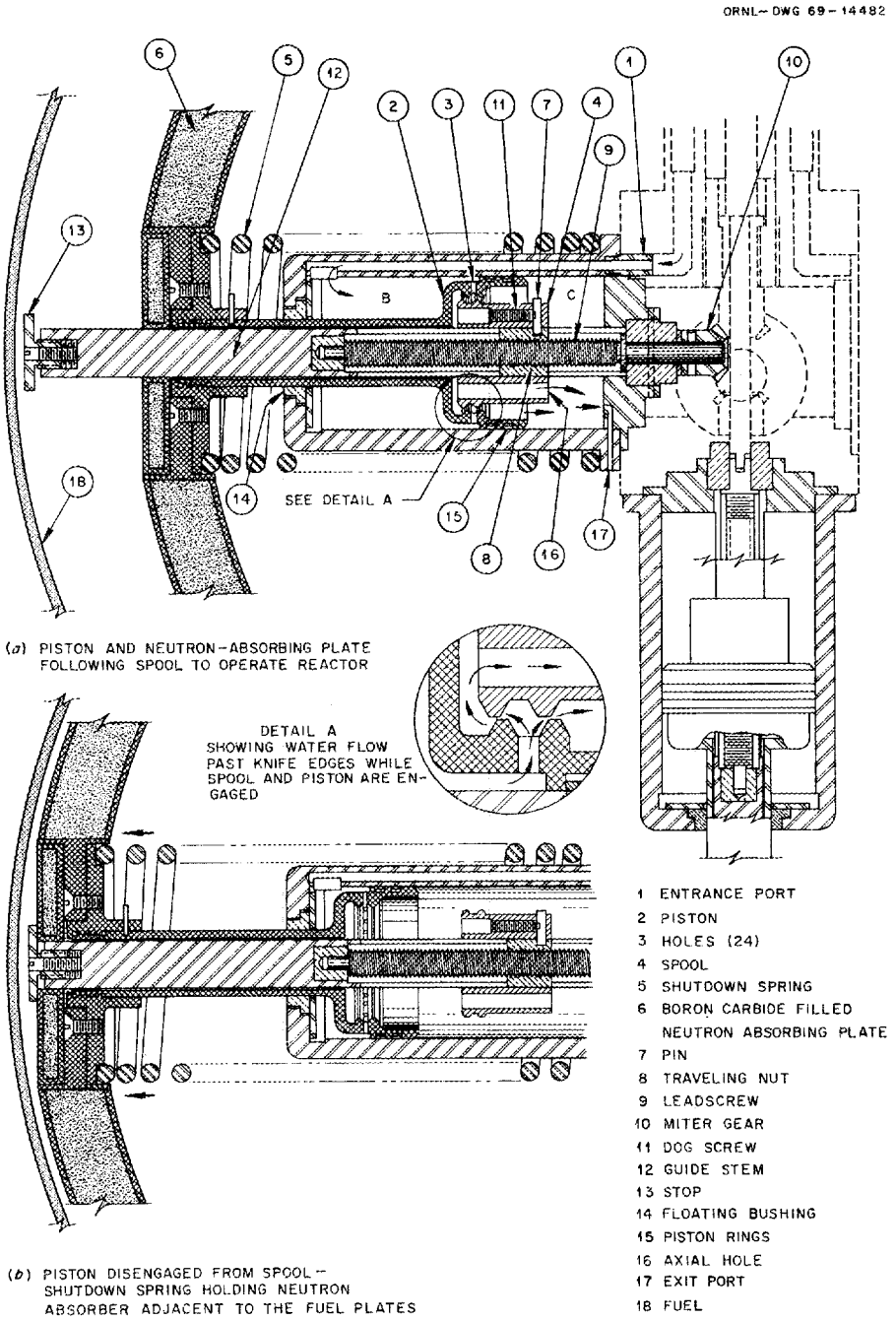

Fig. 4.4. TSR-II control mechanism (a, control plate in picked-up position; b, after scram).

stainless steel spool are fabricated to have a few mils radial clearance with matching knife edges inside the cup-shaped end of the piston. Between the rings on the inside of the piston, there are 24 radial holes for water flow.

A single 7-W Diehl motor mounted in a turret atop the reactor pressure vessel is used to drive the lead screws on all five control mechanisms. Through a 64:1 reduction gear speed, the motor rotates a vertical shaft which extends to the center of the control mechanism housing, where 1:1 miter gears drive the lead screws in the control mechanism.

A pump located in the reactor-cooling-water pump room supplies the water flow to provide the pressure differential in the mechanism. The filtered water passes through a solenoid shutdown valve which is part of the reactor protection system (see Section 4.2.3). There is a shutdown valve for each control mechanism. During nonoperating periods, the valve, which is located in the turret, diverts the water flow from the pump to the cooling water in the pressure vessel.

To operate the reactor, the shim-safety plate must be moved to the right (Fig. 4.4) which is away from the fuel and against the spring force. Since there is no physical connection between the spool with its positioning drive and the neutron absorbing plate and its piston, a pressure differential must be generated across the piston to move it against the spring force. To generate the pressure differential, the reactor protection system must be operating so the shutdown valve directs the water flow to the entrance port of the control mechanism. The water flows through an axial hole in the cylinder wall to the volume, B, to the left of the piston, then passes through the radial holes in the piston to the volume, C, to the right of the piston, and finally exits through ports at the right end of the cylinder. If the knife edges of the spool are not in juxtaposition with those on the piston as in view (b), Fig. 4.4, the water will flow through the cylinder without generating the required pressure differential. When the spool is moved to the left so that its knife edges are in juxaposition with those of the piston [view (a) and detail "A" of Fig. 4.4], they throttle the water flowing through the ports in the piston so that a pressure differential is generated across the piston with the net force moving the piston to the right until the leakage between the knife edges is such that the force on the piston due to the pressure differential just equals the spring force. Then as the spool is moved to the right, the gap between the knife edges closes, which increases the differential pressure across the piston, and the increased pressure differential moves the piston to the right compressing the

spring and opening the gap. Conversely, as the spool is moved to the left, the gap between the knife edges opens, which decreases the pressure differential, and the spring forces the piston to the left to close the gap.

The pressure differential could be generated with a single pair of knife edges. The use of the second pair of knife edges, however, ensures that the only force on the spool due to the throttling action of the knife edges is radial, and since it is circumferentially uniform, the net force is zero. Since there is no pressure differential across the spool axially and the spool has no mechanical connection to the piston, very little force is required to position the spools of all five mechanisms. For routine shutdown of the reactor, the spool may be driven to the left until the shim-safety plate is adjacent to the fuel.

When the reactor protection system operates to shut down the reactor, it reduces the current to the solenoid which cuts off the water flow to the control mechanism and diverts it to the cooling water in the reactor pressure vessel. When the water flow to the control mechanism is cut off, the pressure differential across the piston is reduced to zero and the spring forces the shim-safety plate to the left toward the fuel [see view (b) of Fig. 4.4]. The shutdown action is due to the spring force rather than gravity and is, therefore, independent of the control mechanism orientation.

To operate the reactor again, it is necessary to reestablish flow through the mechanism and to drive the spool to the left to engage the piston.

4.1.7 Fuel Element Mounting

The lower central fuel elements are bolted to the internal cylinder at the horizontal reactor midplane, and the upper ones are supported by the tube extending up from the control mechanism housing. The upper ends of the 12 annular elements are mounted on the outside of the internal cylinder by means of screw-operated wedges which expand into beveled rectangular openings. The lower ends of the annular elements fit into rectangular guides which hold the elements against the outside of the cylinder but do not restrict vertical movement caused by thermal expansion. The spherical control mechanism housing and the inner surface of the fuel annulus are separated by the 1/4-in. layer of water.

4.1.8 Outer Reflector Region* and Shields

Outside the fuel annulus but separated from it by 1/2 in. of water is a spherical shell of aluminum which forces the cooling water to flow through the annular fuel elements. This shell is part of the core reflector and may be in the form of a 3/4-in.-thick aluminum shell (see Fig. 4.5) followed by water or a thin aluminum shell followed by other materials, such as lead and boral (see Fig. 4.1). One such reflector consists of 2-in.-thick lead shielding followed by a 1/4-in.-thick shell of boral (aluminum-clad suspension of boron carbide in aluminum). This lead-boral region is canned in aluminum, the lead being bonded to the aluminum.

Gamma-ray shielding immediately above the central fuel elements is provided by a permanent 2-ft layer of lead shot and water contained within the inner cylinder. This shielding is penetrated by 133 helical tubes through which the cooling water enters the core. Additional shielding is provided by water which floods both the central cylinder and the reactor tank above the core.

Shield plugs (see Fig. 4.1 lead-water shielding) that can be filled with any specified material are mounted above the outer elements. During many of the experiments in which the TSR-II will be used, a specially designed shield will be mounted outside the reactor tank, in which case the material in the shield plugs will match the materials in the special shield. Two of those special shields, Cool-I and Cool-II, are shown in Fig. 4.5 along with their shield plugs.

---

*See Appendix B for abbreviated nomenclature and reactivity worth of various shield reflector arrangements.

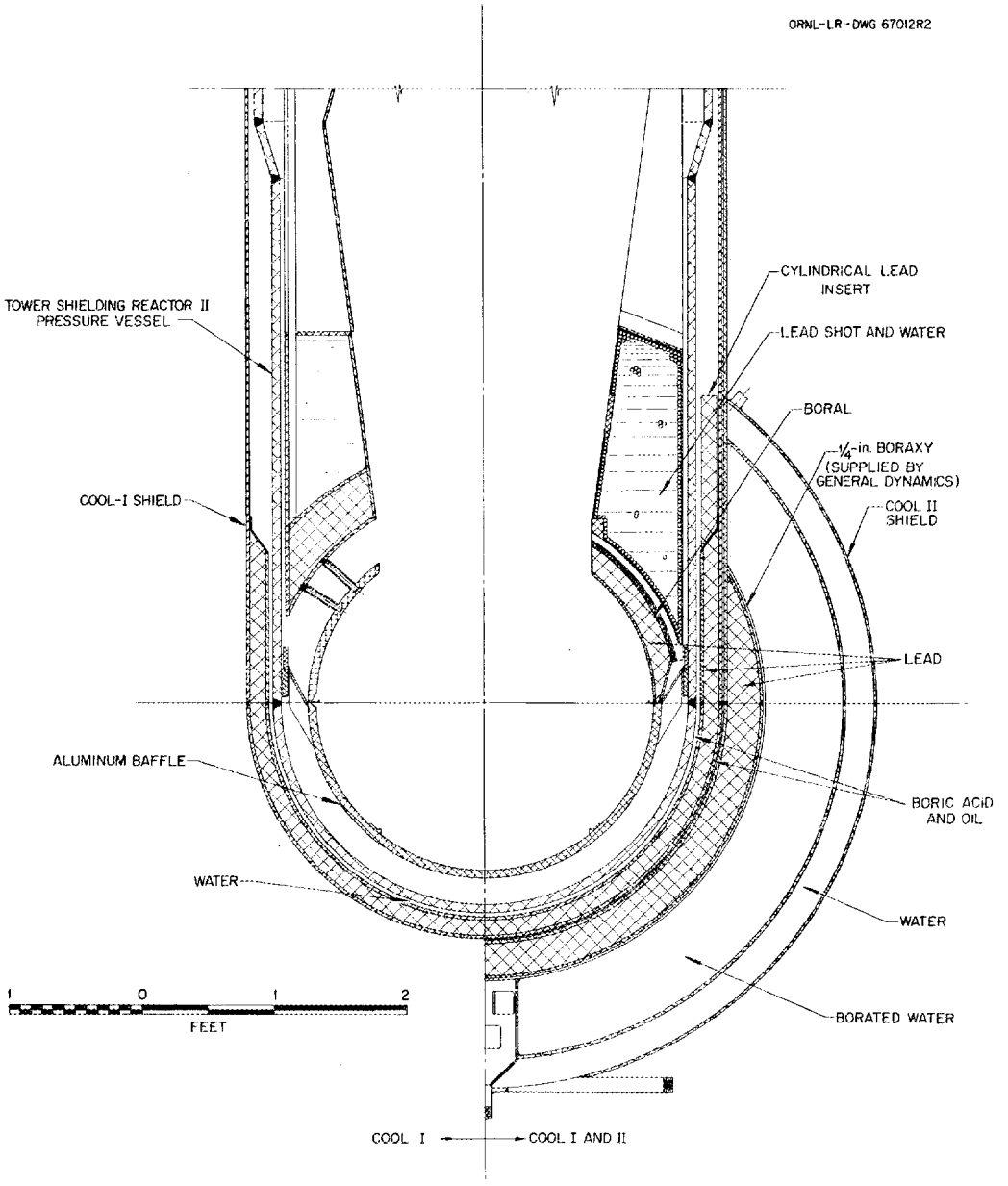

Fig. 4.5. TSR-II shield configurations Cool-I and Cool-II.

4.2 INSTRUMENTATION FOR REACTOR OPERATION AND PROTECTION

The instrumentation for Reactor Operation and protection of the TSR-II was basically the same as that used for the original Bulk Shielding Reactor* and the Tower Shielding Reactor (TSR-I).** The major difference between the TSR-I and the TSR-II is the operation of the control mechanism in the internal reflector region of the TSR-II core, as described previously, to provide a symmetric leakage flux. In 1964 the TSR-II operation and protection systems were upgraded so that, insofar as practical, there is channel isolation, dual information and action in key circuits, and both makeup and dropout actuation of the slow scram.

4.2.1 Control Logic

The control logic is shown in block diagram form in Fig. 4.6 (RC9-1-1C). Similar logic diagrams for the gate-door interlocks and slow-scram circuits are shown in Fig. 4.7 (RC9-1-1D). To permit the operation indicated in the circles on the diagram, all the conditions indicated in the blocks along a line from the control power to the circle must be satisfied. The conditions in the double-line blocks are met by manual operation; all other conditions are automatic. The interlocks to ensure orderly operation are tabulated in Table 4.1.

4.2.2 Neutron Flux Readout

The information from the instrumentation for operation and/or protection systems which is visible to the operator at all times during an operation is given below, together with the source from which the information is obtained.

---

*W. M. Breazeale, The New Bulk Shielding Facility at Oak Ridge National Laboratory, ORNL-991, May 1951.

*C. E. Clifford, The Tower Shielding Facility Safeguard Report, ORNL-1550 Special, June 1953.

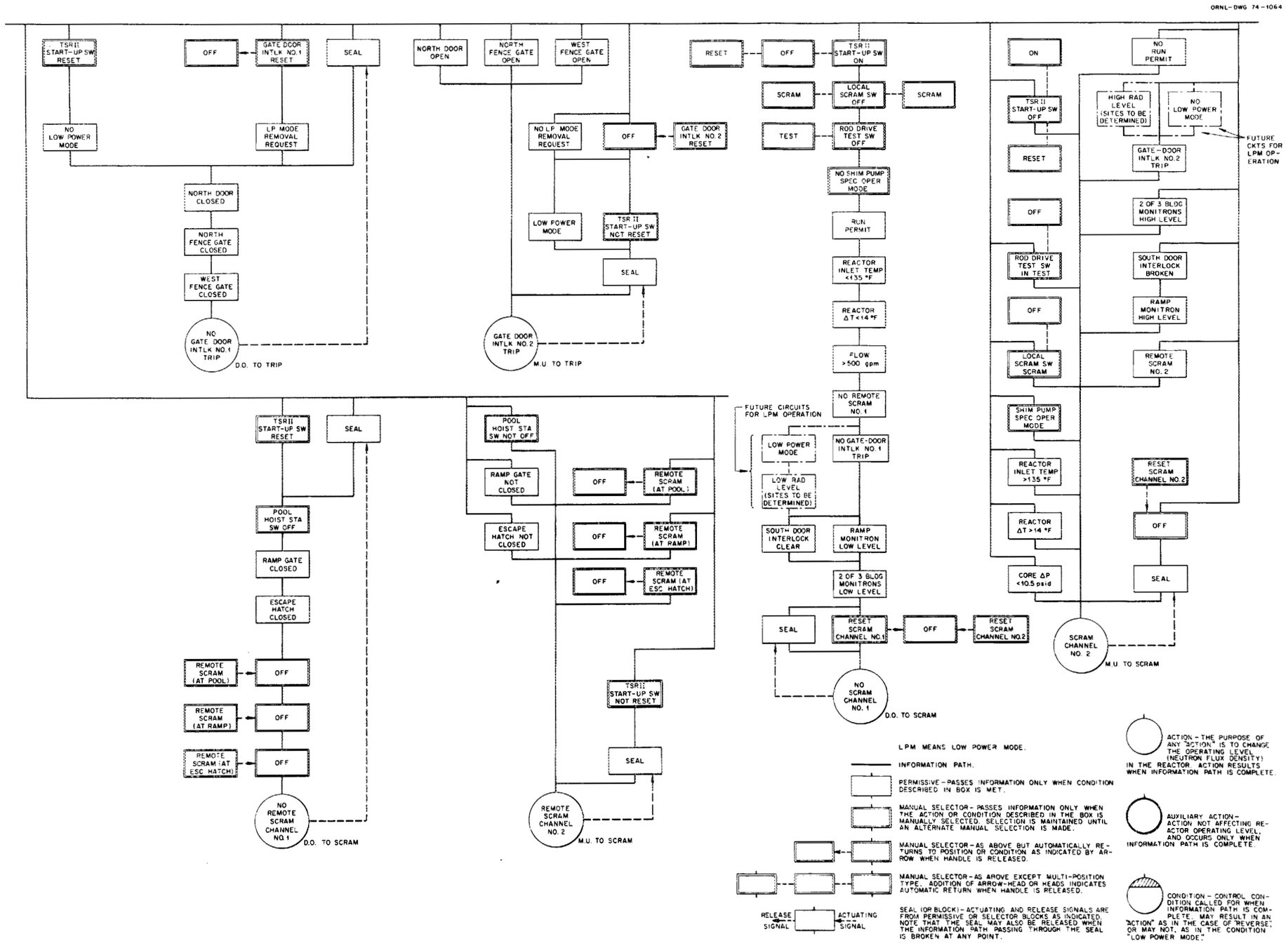

Fig. 4.6. Control logic diagram of control system.

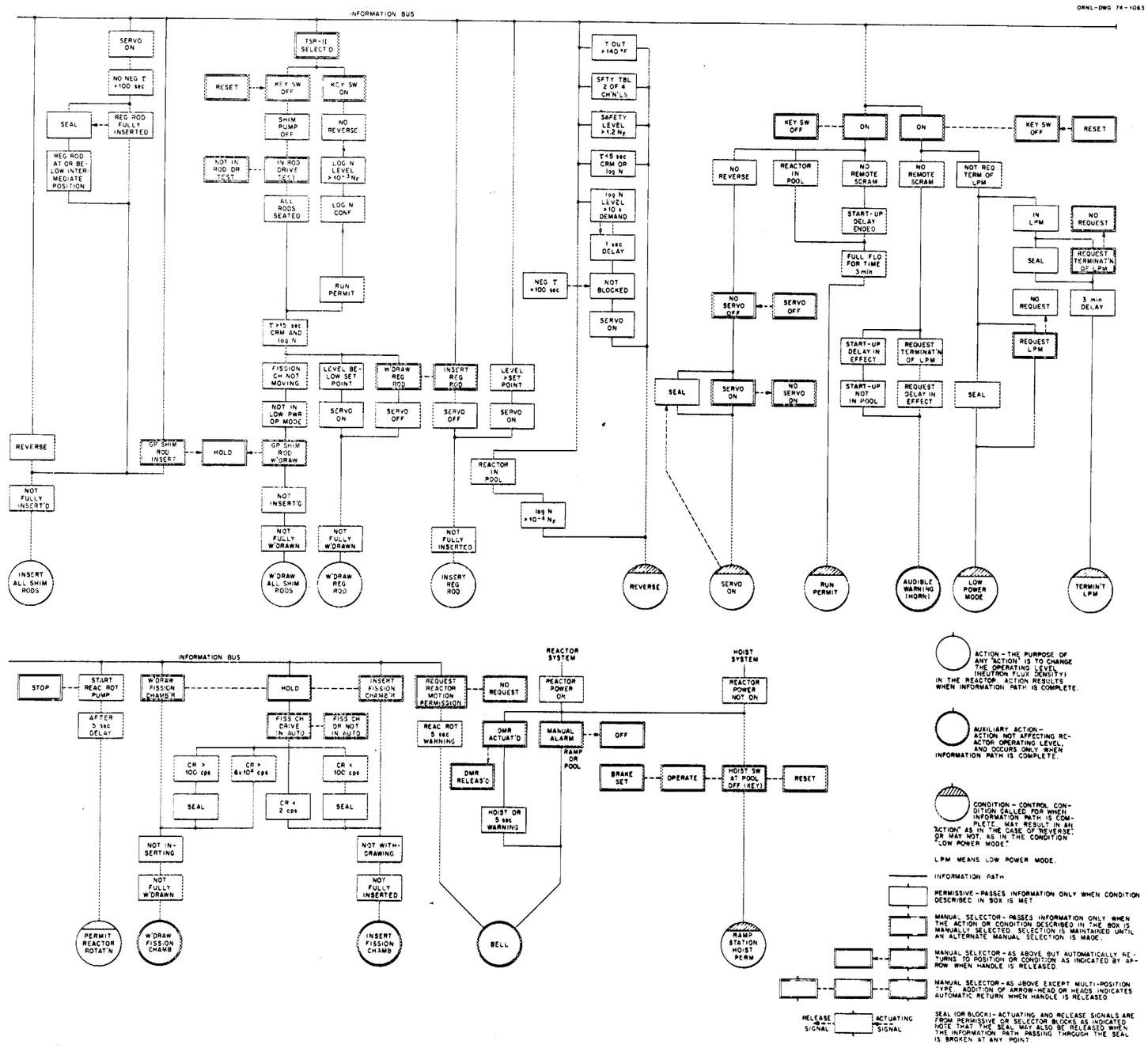

Fig. 4.7. Control logic diagram of gate-door interlocks and slow scram circuits.

Table 4.1. Protection and control functions

Conditions necessary to obtain run permit	Conditions which must exist to permit shim-safety-plate withdrawal	Conditions which initiate automatic insertion of shim-safety plates	Conditions which initiate a slow scram	Conditions which initiate a fast scram
Reactor cooling water at full flow for 3 min or low-flow permit on	Run permit on	Log N period <5 s	Area interlocks broken	Ø > 150%
	Startup channel log count-rate meter in operate and indicating 2 cps or log N power > 1 x 10^{-3} N_f	Startup channel log count rate period <5 s	Startup switch off	Period <1 s
			Local or remote manual scrams actuated	
Area interlocks made, startup key switch reset and warning horn blown for 3 min	Main flow >500 gpm or low-flow permit on	Reactor outlet water temperature >140°F	Reactor ΔT > 14°F(2)	
	Log N period >15 s	Log N power >1.2 N_f	Shim pump operating for freeze-up protection	
	Log count-rate period >15 s	Two or more safety troubles	Main flow <500 gpm	
	Startup chamber not withdrawing (auto or manual)	Log N power 10 times servo demand; not blocked by <100 sτ and servo on	Reactor ΔP <10.5 psi	
or			Reactor inlet or heat exchanger outlet temperature >135°F(2)	
Reactor in handling pool and startup switch reset	*Gates, north door interlock bypass off	Log N power exceeds 10^{-4} N_f with reactor in pool	Test switch on TEST	
	*Gates, north door interlock bypass removal off (horn blows 3 min before it clears)		No. 2 of 3 monitrons >20 mR/h	
			South door closed or ramp radiation level <20 mR/h	

*Not in use -- requires special RORC approval.

1. The neutron population from source level (see Section 4.1.5 for neutron source for startup) to full power is measured by a fission chamber (this fission chamber was constructed from ORNL design drawing Q-2014) and associated electronic equipment. The information is presented digitally and in logarithmic form that covers five decades for any given position of the fission chamber. The chamber may be moved remotely to cover an additional three decades.

2. The power level is presented on two channels: (a) a Westinghouse WL-6377 or WL-8074 compensated ionization chamber and a log N amplifier, which provide a six-decade logarithmic presentation of power level, and (b) a Westinghouse WL-6377 or WL-8074 compensated ionization chamber and a picoammeter which provide a linear power indication from the limit of compensation of the chamber, approximately 10^{-5} full power, up to full power.

3. Period information is obtained by electronically differentiating the output of 2(a) above, which gives d(log N)/dt.

4. The safety chamber currents are read on meters driven by monitor instruments on the sigma amplifier chassis.

4.2.3 Solenoid Shutdown Valve

Separate water lines lead from a common manifold to the five independent shim-safety-plate control mechanisms. Each line contains a flow-limiting orifice and a solenoid-operated shutdown valve (see Fig. 4.8) which responds to electric current from an ORNL magnet amplifier. At reactor startup,, the current through the solenoid coil is at its maximum, and the valve permits water (0.5 to 2.0 gpm) to flow to the control mechanism for its operation. As the reactor power increases, the current is reduced until, at 150% of the maximum permissible reactor power, the current is insufficient to hold the valve open. When the solenoid-operated shutdown valve drops out, it not only stops the water flow to the mechanism but also diverts the flow to a bypass line. Instruments at the console show the solenoid current and the water flow to each mechanism.

4.2.4 Shim-Safety Plate Reactivity

The shim-safety plate drive permits reactivity to be added at a rate of between 0.05×10^{-2} and 0.16×10^{-2} $\Delta k/k$ per second. The rate is about 0.06×10^{-2} $\Delta k/k$ per second at the normal critical position. Full motion of the shim-safety plates changes the reactivity by 0.038 $\Delta k/k$ for a cold clean core with five shim-safety plates (see Fig. 4.9); with the No. 5 plate replaced with aluminum, the worth of the plate as a function of position is also shown on Fig. 4.9.

4.2.5 Regulating Plate Reactivity

The regulating plate has no scram capability and is operated independently of the shim-safety plates. It is fastened to a nonrotating tube which is concentric with the geared shaft that operates the shim-safety plates and is moved slowly up or down by means of an electric motor drive. The total worth of the regulating plate in a cold clean core with five shim plates is approximately 0.40×10^{-2} $\Delta k/k$, and its sensitivity is between 0.014×10^{-2} and 0.032×10^{-2} $\Delta k/k$ per second; the latter value exists when the neutron-absorbing plate is closest to the fuel. The rate at 1 in., the position in which the plate is normally used, is about 0.014×10^{-2} $\Delta k/k$ per second (see Fig. 4.10). The worth of the regulating plate in a core with four shim plates and approximately 2000 MWh of burnup is also shown.

4.2.6 Shim-Safety Plate Seat Information

A signal from a seat-indicating system actuated by each of the shim-safety plates indicates to the operator, by means of panel lights, when each plate is in the shutdown position adjacent to the fuel. The signal is initiated when a plate strikes a leaf spring which opens a tiny nozzle on the control mechanism housing and permits water to flow. Water from the main 6-in. reactor inlet cooling line is supplied to the nozzle through a bypass line that has additional filtering. Turbine flow meters monitor the flow and transmit the readings to meters on the console. Magnetic contacts on each console meter actuate a light to indicate that the plate is seated when the flow exceeds a preset value.

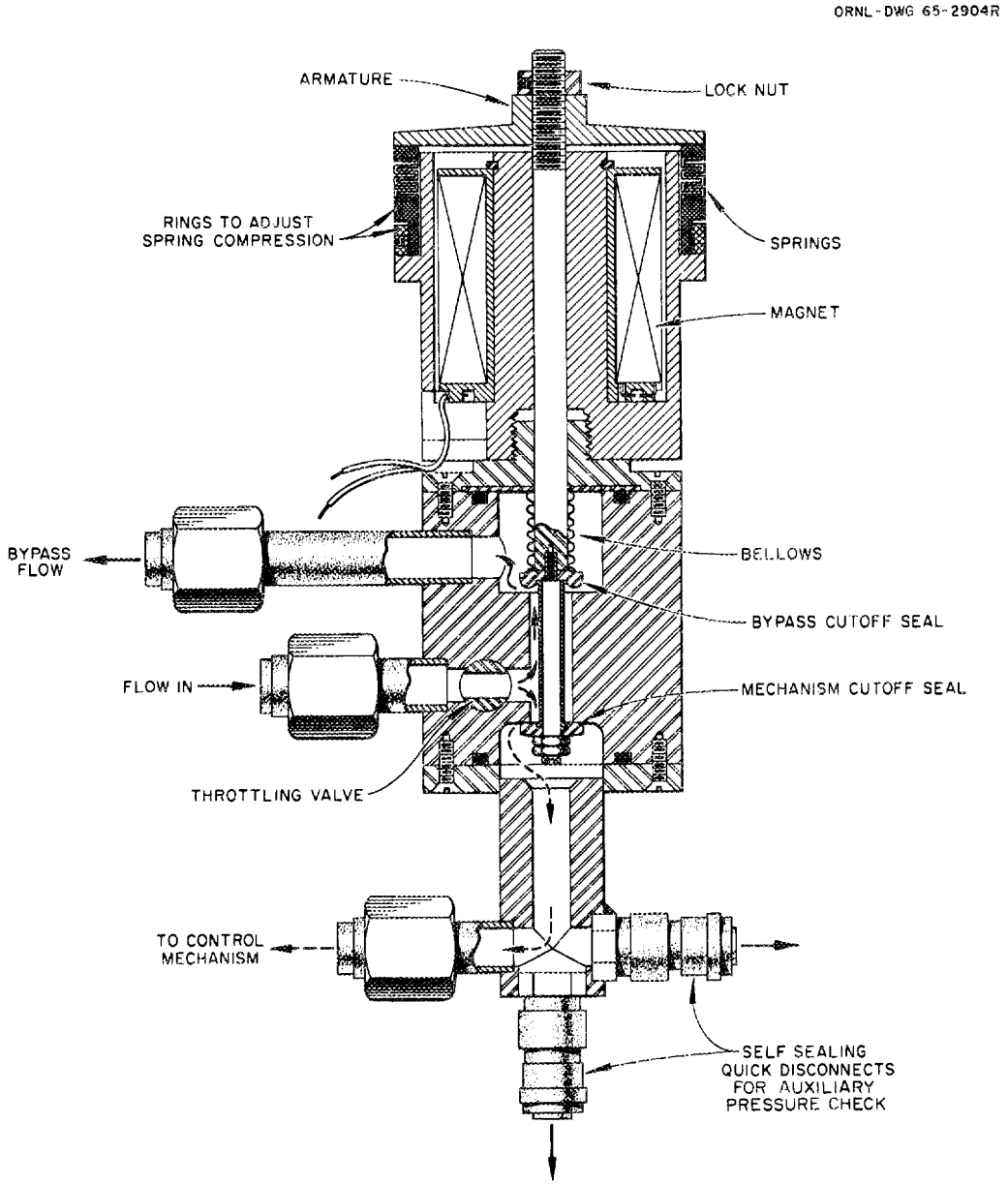

Fig. 4.8. TSR-II solenoid shutdown valve.

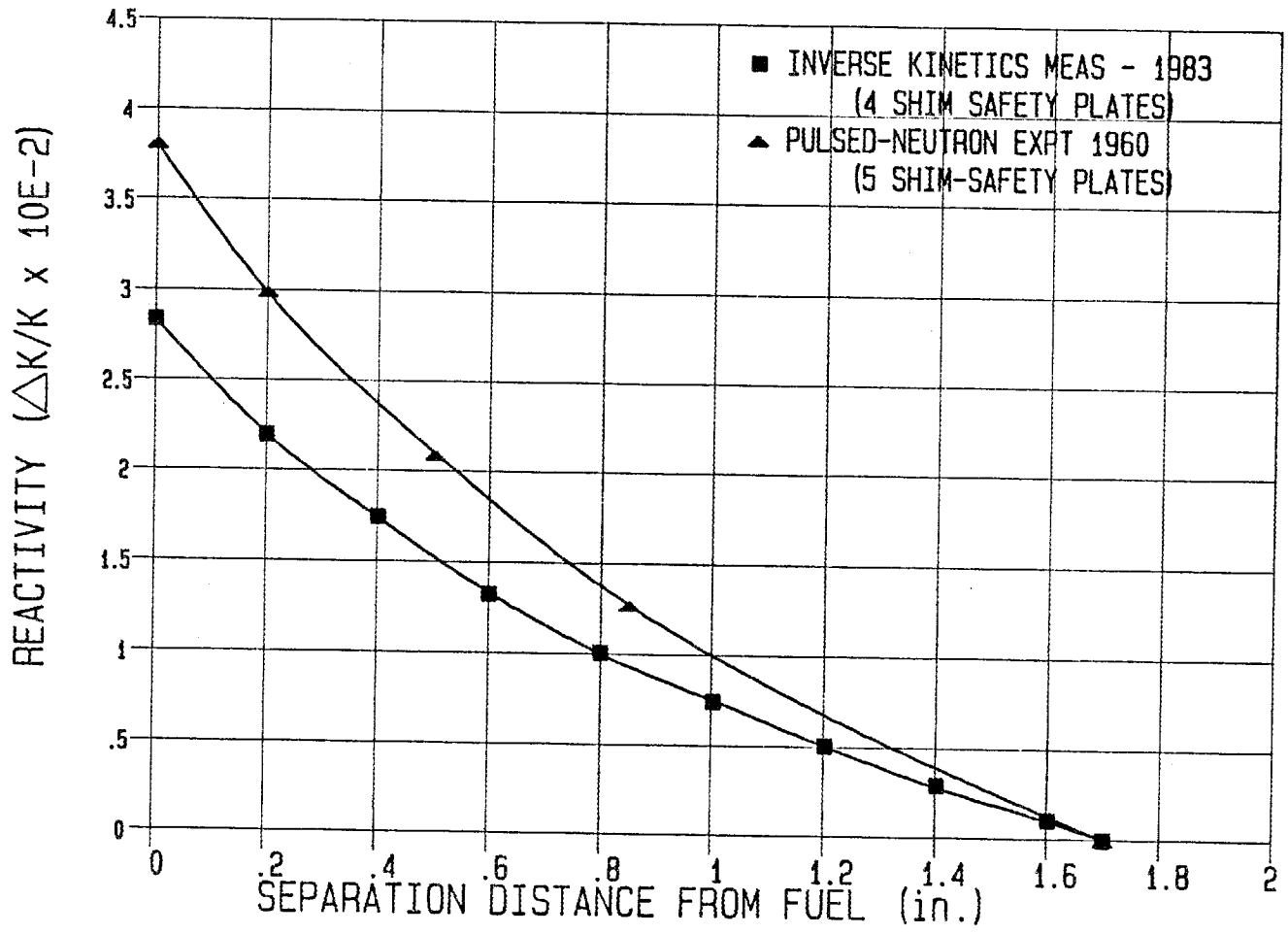

Fig. 4.9. Reactivity worth of all TSR-II shim plates.

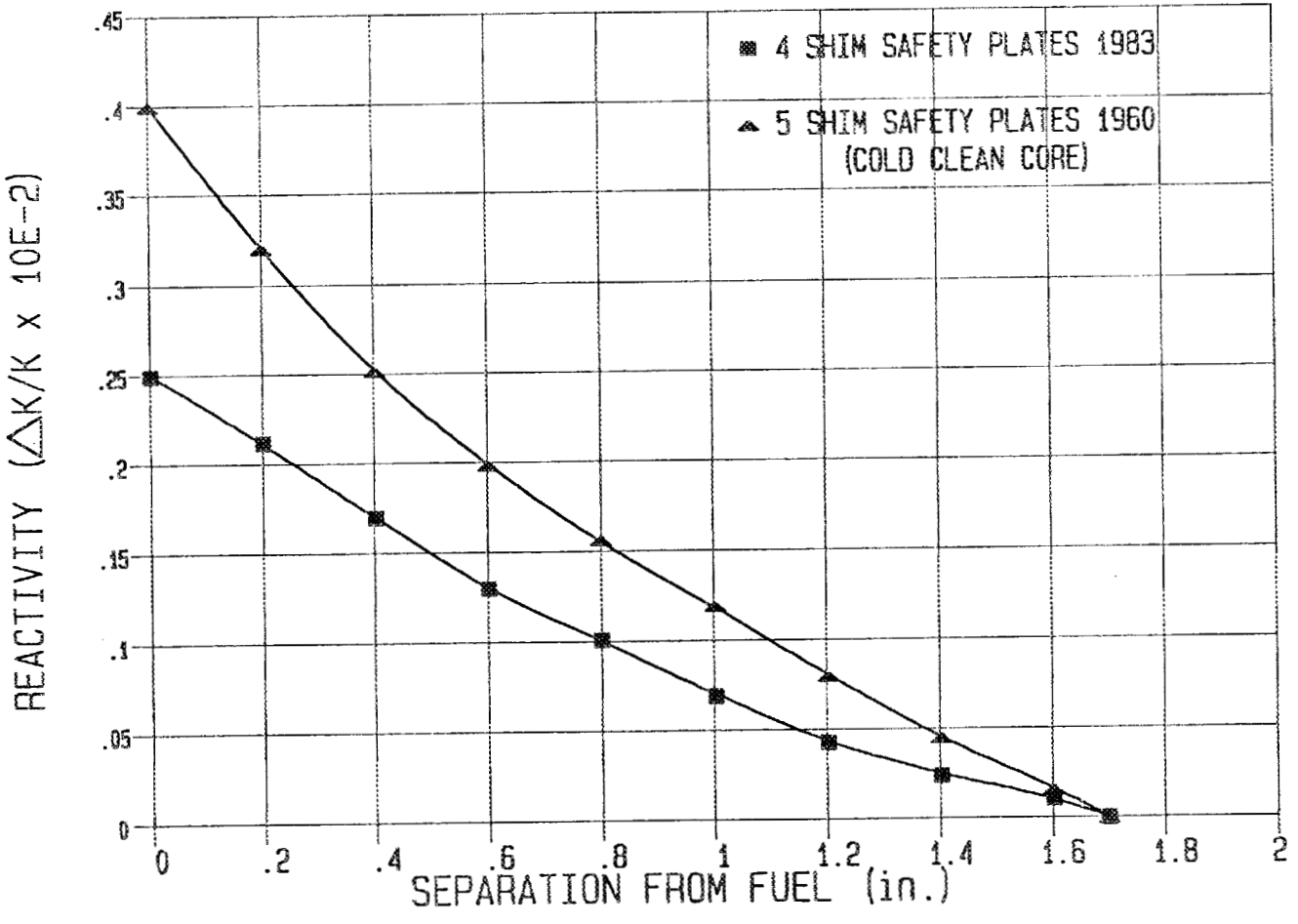

Fig. 4.10. Reactivity worth of the TSR-II regulating plate.

4.2.7 Shim-Safety-Plate Clutch Information

Shim-safety-plate pickup is a magnetic operation in most reactors, and engagement of the magnet and the magnet keeper on a plate is denoted as a clutch made. In the TSR-II, shim-safety-plate pickup is a function of the differential hydraulic pressure in a control mechanism, and clutch information is indicated individually for the plates by metering the flow to each control mechanism. Flow is monitored with turbine flow meters which drive indicators at the console. When a plate is properly engaged, its flow remains within preset limits, and is indicated by its clutch light and meter on the console.

4.2.8 Plate Position Indicators

Upper- and lower-limit switches actuated directly by the plate drive indicate the fully inserted or fully withdrawn plate positions when the shim-safety plates are clutched. A dual selsyn system is used to indicate the position of the shim-safety-plate drive, while a single selsyn system indicates the regulating plate position.

4.2.9 Servomechanism Control

A servomechanism system is provided to operate the regulating plate to maintain the power level constant from a few watts to 1 MW.

4.2.10 Instrument Locations

A pulse preamplifier in the fission chamber circuit and preamplifiers for safety chambers are located at the reactor, and a log N preamplifier is located in a sling box approximately 30 ft from the reactor. All other electronic components are located in underground Building 7702.

4.2.11 Water-Flow Interlocks

A time-delay interlock prevents the reactor from being started before the main pump has circulated water through the reactor at full flow for a period of 3 min, the time required for the water to make one complete pass through the system when the cooling water is supplied through hoses to permit operation with the reactor suspended from the towers; such mixing will help smooth out any temperature gradients.

After startup, reduction of the main-pump flow below 500 gpm will produce a scram. The minimum water-flow requirements may be bypassed for special heat-power reactor tests. For such operations, an additional control command prevents the power level from rising above 75 kW.

4.2.12 Annunciator System

Two types of audible alarms, each accompanied by a visible alarm, alert the operator at the console to an abnormal condition. A single-stroke gong is the audible signal when the reactor is not being operated. During operation, the audible alarm is a buzzer. The visible alarms are either red or yellow. The yellow signal alerts the operator to a condition that may require his action; the red signal indicates that a condition has occurred. The annunciators are listed below along with the action or condition that actuates the alarm.

Annunciators with red visual alarms are:

INV(erter) ON: invertor has been turned ON,

ΔT SCRAM: reactor $\Delta T > 14°F$,

MAIN FLOW SCRAM: reactor cooling water flow <500 gpm,

REACTOR T_{outlet} HI(gh): $T_{outlet} > 140°F$,

LOG N PERIOD < 5 s,

FAST SCRAM: Neutron level > 1.5 N_f, τ < 1 s,

REVERSE: < 5 s, T_{outlet} H, more than 1 safety trouble, log N > 1.2 N_f, log N backup, in-pool operation > 10^{-4} N_f,

REMOTE SCRAM: manual scram at pool, ramp, or escape hatch,

COUNT RATE PERIOD < 5 s,

SAFETY LEVEL: safety level > 1.2 N_f,

GATES AND DOORS: north door open, north gate open, or west gate open,

MONITRON SCRAM: at least two building monitrons exceed 1.2 N_f, and

LOG N BACKUP REVERSE: log N 10 x servo demand with log N period more positive than -100 s.

Annunciators with yellow visual alarms are:

H_2O ACTIVITY MONITOR FLOW ABNORMAL: flow < half maximum,

ACCESS NOT SECURE: outer perimeter gate has been opened,

ΔT HI: reactor ΔT >12°F,

MAIN PUMP <45 psi: main pump suction head <45 psi,

REACTOR WATER FLOW LO(w): reactor cooling water flow <750 gpm,

MAIN PUMP SUCTION <80 psi,

RESERVOIR WATER LOW: 2000 gal reservoir nearly empty,
WATER ACTIVITY HIGH: counting rate approximately 1000 cpm above equilibrium value,
PUMP HOUSE CONTROL ON: control of flow rate shifted from console to pump house,
MAKEUP TANK HIGH: water level in makeup tank high,
RESISTIVITY LOW: resistivity of reactor cooling water <500,000 ohm-cm,
DEM(ineralized) WATER LOW: makeup supply is low,
DEMINERALIZER PUMP VACUUM: demineralizer pump suction head <10 psi,
MAKEUP TANK LOW: water level in makeup tank is low,
SAFETY TROUBLE: at least one safety trouble indication exists,
LOW AIR PRESSURE, instrument air pressure <42 psi,
LOUVERS NOT OPEN,
120-V BATTERY ABNORMAL: battery bank voltage <90% of normal,
SOUTH DOOR: door open and ramp monitron reading >7.5 mR/h,
TEST BLOCK REMOVED,
TURRET TEMPERATURE <40°F,
REACTOR T_{in} HI(gh): reactor inlet temperature >135°F,
COUNT RATE ABOVE 6×10^4 cps,
MONITRON OUT OF SERVICE,
TEST ON: shim and regulating plate drive power on but magnet current is cut off,
REGULATING ROD AT UPPER LIMIT,
MONITRON HIGH LEVEL: level on at least one building monitron >7.5 mR/h, and
HOIST POWER OFF: power to warning signals transferred from hoist power to reactor power.

4.3 PROTECTION SYSTEM

The reactor protection system is designed to scram or shut down the reactor automatically whenever certain reactor variables exceed their set points. The reactor may also be shut down by operating a manual scram switch. Operation of the reactor protection system is discussed below. Automatic shutdown of the reactor to ensure orderly operation or personnel protection is discussed in subsequent sections.

An automatic shutdown is achieved by the reactor protection system cutting off the direct current supplied by the magnet amplifiers to their respective solenoid-operated shutdown valves (see Section 4.2.4). When a shutdown valve is de-energized, it cuts off the water flow to its control mechanism, and the associated shim-safety plate is released.

Two methods are employed to cut off the solenoid current. The primary method, referred to as the neutron level safety or the fast-scram system, employs electronic circuits to reduce solenoid current from the magnet amplifier; the secondary method, referred to as a slow-scram system, utilizes two systems of relays or a manual switch to interrupt power to the magnet amplifiers to cut off the magnet current. Personnel protection systems and control systems that ensure orderly operation can also produce slow scrams in the same manner.

The primary protection system (see Fig. 4.11) is designed so that it shuts down the reactor if any of the following conditions exist. A signal proportional to the neutron flux level is sensed by three 2-in. parallel circular plate (PCP) ionization chambers which were designed and built at ORNL. Each signal is then amplified and sent to the sigma bus which responds to the highest sigma amplifier output signal. If any one sigma amplifier indicates that the neutron flux level is too high, it will increase the voltage on the sigma bus which causes the current from each magnet amplifier to the coil of its respective solenoid-operated shutdown valve to be reduced so low that it cuts off the water flow to the associated reactor control mechanism, and thus a reactor shutdown is initiated. Similarly, a period that is shorter than 1 s will, by the period amplifier, raise the voltage of the sigma bus and cause a reactor shutdown as noted above. If the sigma bus experiences an excessively low resistance to ground, a bus-protect circuit in each magnet amplifier reduces the current flowing to its solenoid in a manner similar to that which occurs when an ionization chamber is exposed to a high neutron flux, and a reactor shutdown is initiated.

A functional diagram of the slow-scram system is shown in Fig. 4.12. The reactor can be operated in a NORMAL or LOW-FLOW PERMIT mode*. The system consists of a manual scram switch and sensors that monitor reactor variables, and through amplifiers and automatic switches, actuate two sets of slow-scram relays. One set of relays controls a makeup relay and the second set controls a dropout relay. The power to the magnet amplifiers in the primary protection system (see Fig. 4.11) can be interrupted to shut down the reactor by operating the manual scram switch or by energizing the makeup scram relay or deenergizing the dropout scram relay (see Fig. 4.12). When conditions are normal and no

---

*LOW-FLOW PERMIT mode will be installed through a change notice and procedures generated only when this type of operation is needed (see Section 7.4, ORNL/TM-2893, Vol. 1, Rev.).

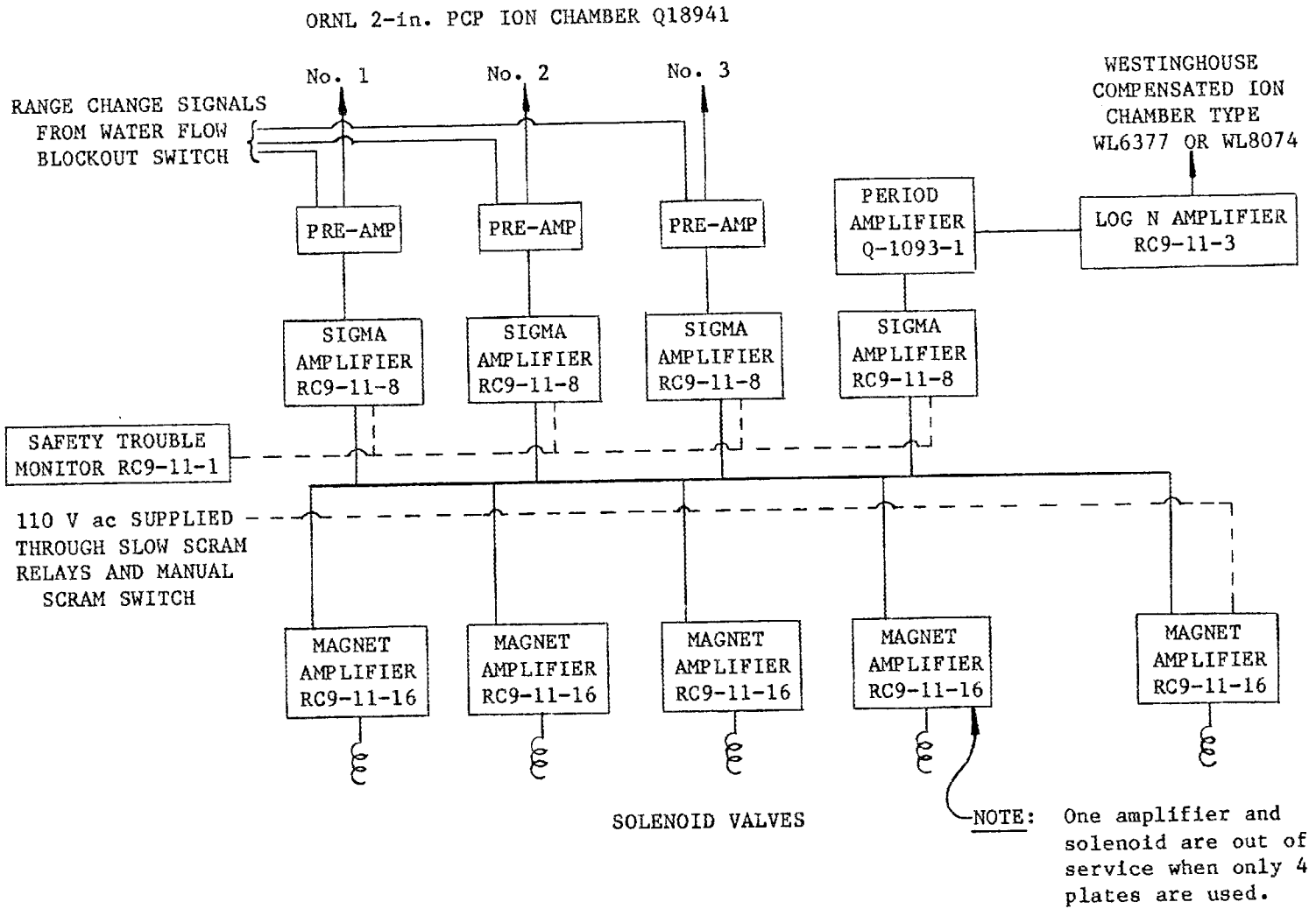

Fig. 4.11. Primary protection system.

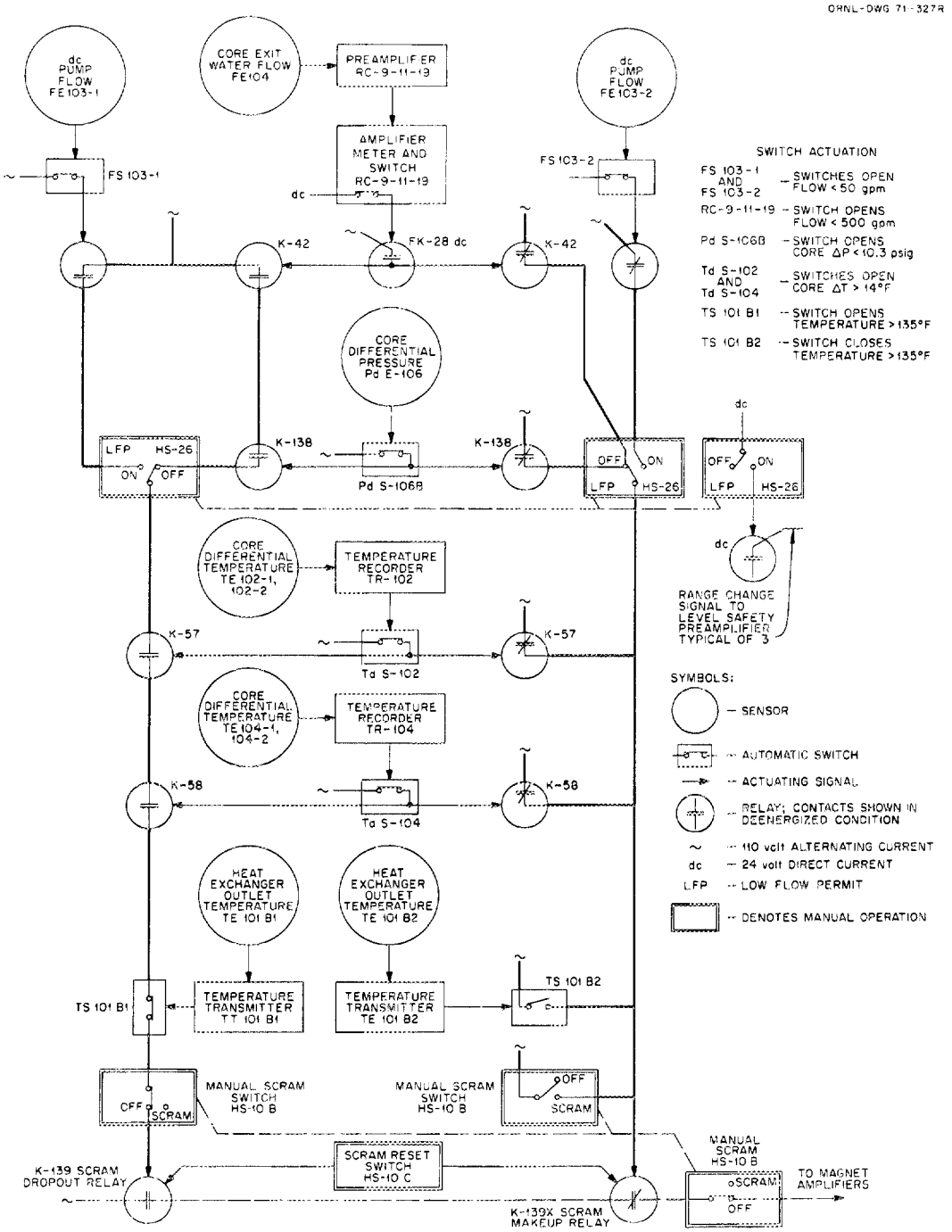

Fig. 4.12. Slow scram system.

variable exceeds its trip level, all of the relay contacts in the ac voltage line that energizes the dropout scram relay are closed, and all relay contacts that can supply ac voltage to energize the makeup scram relay are open. Under these conditions, both the makeup and dropout scram relays can be reset, i.e., their coils energized, and ac power supplied to the magnet amplifiers. When a trip level is exceeded, contacts in the line supplying power to the dropout scram relay coil are opened or contacts in the line supplying power to the makeup scram relay coil are closed, or both actions occur. When the manual scram is actuated, it operates both the makeup and the dropout scram relays to interrupt the ac power to the magnet amplifiers and also interrupts the line supplying ac power to the magnet amplifiers.

The sensors that monitor reactor variables and are part of the reactor protection system are discussed below. A sensor monitors the heat exchanger outlet temperature. If the heat exchanger outlet temperature exceeds 135°F, the sensor causes a dropout scram: if the reactor outlet temperature exceeds 135°F, a sensor causes a makeup scram. There are two channels that monitor the temperature rise across the core. If the core ΔT exceeds 14°F, one channel causes a makeup and the other a dropout scram. The cooling water-flow rate through the core and the pressure drop across the core are monitored. If the flow rate drops below 500 gpm, it initiates a dropout scram. If the pressure drop is below 10.5 psig, a makeup scram is initiated.

4.4 HEAT-REMOVAL SYSTEM

4.4.1 Main Flow Circuit

The heat-removal system, shown in simplified form in Fig. 4.13, consists of a 50-hp main pump for pumping demineralized water, at a rate in excess of 800 gpm, from a 1500-gal detection tank through a 6-in.-diam aluminum pipe and a 6-in.-diam neoprene hose to the reactor and a 5-MW forced-draft air cooler. The main pump operates against a 68-psi dynamic head, and a fill and pressure pump operates in conjunction with a variable-pressure regulating system to maintain about 5 to 10 psi in excess of the minimum necessary to keep the system full of water as the height of the reactor is varied. Pressure relief valves are located at appropriate points in the system. The water used for cooling and moderating the reactor enters the central cylinder near the top and follows the path shown by the arrows in Fig. 4.1. It flows downward

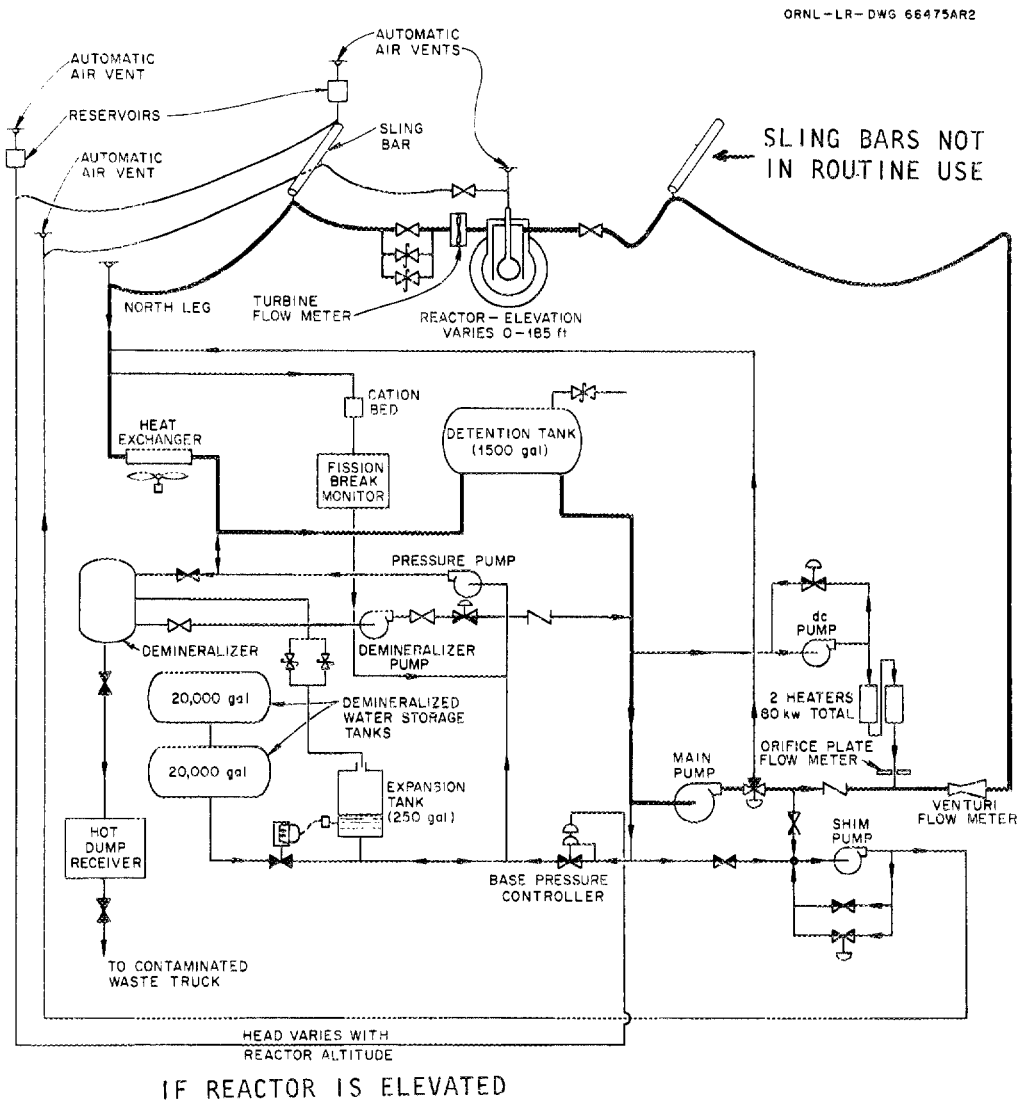

Fig. 4.13. Water system.

through the 133 helical ducts in the lead-water shield, through the upper fuel elements, around the spherical control-mechanism housing, and through the lower fuel elements, and then it turns and flows upward through the annular fuel elements to the region above the core and out of the assembly. While flowing upward, the water also cools any outer reflector since some of the flow is between the outer surface of the fuel and the inner surface of the aluminum shell.

When the water leaves the reactor assembly, it flows to the forced-draft air cooler, where two large variable-pitch fans blow air across aluminum tube-and-fin radiators to remove the heat from the water. The pitch of the fans and the position of the radiator louvers are manually controlled to maintain a fixed temperature for the water leaving the cooler.

4.4.2 Direct Current Pump for Cooling and Heating

The dc pump is a 5-hp battery-operated pump which operates parallel to the main 50-hp pump. It is operated continuously during freezing weather and, in the event of an electric power failure, will pump water to the reactor at a rate in excess of 50 gpm. The water from the dc circulating pump passes through two 40-kW heaters, which operate automatically with other strategically placed heaters to prevent the system from freezing when the reactor is not being operated.

4.4.3 Reduced-Flow Operation

Procedures require that full water flow be used during normal reactor operation; however, the system is capable of providing a reduced flow for special operations. An air-operated valve at the main pump discharge can be controlled at the reactor console to divert all but 200 gpm of water flow from the reactor.

4.4.4 Shim Pump

The shim pump delivers water to the control turret of the reactor. Here the flow is divided to operate the reactor control mechanisms. The water then joins the main coolant stream within the reactor.

4.4.5 Fill and Pressure Pump

The reactor is designed to be operated at elevations of up to 185 ft above ground level; therefore, the water pressure at ground level must be maintained high enough to ensure adequate positive pressure at the highest points of the system at all times. To provide the minimum but adequate pressure, a pump which operates continuously takes water from a reservoir outside the main cooling system and adds it to the system, while a differential base-pressure controller (see following section) bleeds off water so that the main cooling system base pressure will be no more than the pressure on the reference side of the regulator.

4.4.6 Variable Base-Pressure Regulating System

Variable base-pressure regulation is accomplished with a double-diaphragm, balanced, pressure control valve. A reference pressure is applied to the upper diaphragm of the control valve, and the cooling system base pressure is applied to the opposing lower diaphragm. The valve remains closed until the fill and pressure pump develops a system base pressure that begins to exceed the reference pressure. At this point, the overbalance in pressure will cause the valve to open and bleed off water at a rate that will maintain a balance between the reference pressure and the cooling system base pressure.

The reference pressure is obtained from a variable-height column of liquid (see Fig. 4.14) which is contained in rigid tubing that is attached to leg I of the TSF (see Section 10.2.6). From this point, the containment consists of flexible tubing attached to a messenger cable that extends from the tower leg to the north sling bar. A small tank with an automatic vent is installed at the top of the fixed column and at the sling bar so that whichever tank is higher will be vented to the atmosphere. The reference pressure remains constant as long as the reactor sling bar is below the top of the fixed column and varies as a function of altitude as the sling bar is raised above this point.

With the reactor operated at ground level in the Big Beam Shield, the reference pressure is established by filling the column with fluid sufficient to provide a fixed reference pressure of 40 psi.

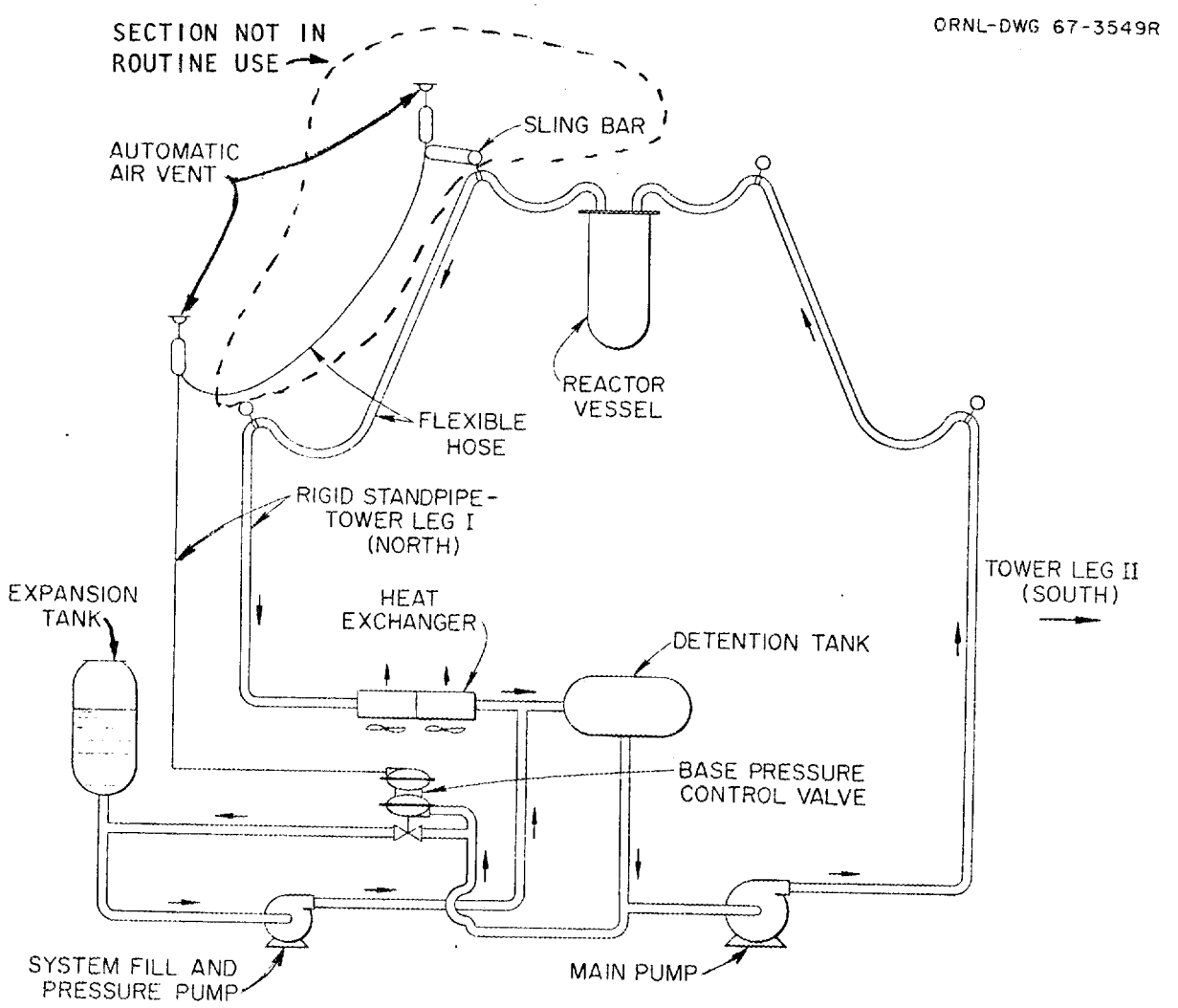

Fig. 4.14. Base pressure regulating system.

4.4.7 Make-up Water System

Ball float valves are placed at high points in the system to bleed off air or other gases so that the active loop (approximately 4200 gal when the system has hoses attached for operation above ground) will be completely filled with water. Thus, provision must be made for letting water in or out of the active loop since the water changes volume when heated or cooled. A make-up tank serves this purpose in conjunction with the pressure pump and the base-pressure controller.

A little water leakage normally occurs at the various pump seals and elsewhere. A float switch in the make-up tank actuates a solenoid-operated valve to admit more water as needed from two 20,000-gal demineralized waterstorage tanks. System water is never returned to these storage tanks.

4.4.8 Demineralizer and Waste Disposal

The demineralized water in the storage tank is carried by truck to the TSF. To minimize turbidity of system components and activation of minerals in the water, a bypass mixed-bed demineralizer is operated as necessary to maintain the resistivity of the system water above 500,000 ohm-cm. Water from the low pressure part of the reactor is forced through a throttling valve and through the demineralizer; it then is pumped back into the main loop system.

The demineralizer is regenerated as needed. The rinse residues from this process are collected in the hot-dump receiver and then transferred into a contaminated-waste truck for disposal according to Laboratory procedures.

4.4.9 Water Activity Monitor

Downstream from the reactor at a sufficient distance to ensure that the ^{16}N activity has decayed to a negligible value, a small portion of the reactor cooling water is passed through a fission-break monitor. During normal operation, the gamma-ray activity of the cooling water, as indicated by the monitor, increases slowly and reaches an equilibrium value (approximately 4000 counts/min) after a period of full-power operation. If fission products (primarily iodine) are present in the water, their activity will increase rapidly above the equilibrium value and trip an alarm, which is set at approximately 1000 counts/min above equilibrium.

4.5 REACTOR SUSPENSION SYSTEM

For most in-air operations, the reactor will be suspended from a 4-ft-diam ball-bearing assembly (Fig. 4.15) which is mounted in the center of a platform suspended by shackles from the hoist cables of tower legs Nos. I and II. The reactor (and also its shield if one is used) can be rotated around its vertical axis to enable study with a fixed-position detector of the leakage pattern from the reactor or the reactor and a shield. The inner-bearing race extension, shield support collar, and reactor support rim are equipped with a series of discontinuous interlocking ledges. This bayonet-lock arrangement permits the support platform to be used for lifting the reactor alone or together with the shield as a unit, the mode of lifting depending on the angular position of the inner-bearing race. The overall arrangement of the reactor, support platform, hoses, and electrical cables suspended from the towers at two different elevations is shown in Fig. 4.16.

4.6 BIG BEAM SHIELD

In 1973, a concrete, stainless steel, and water shield was constructed just south of the reactor handling pool to house the reactor for ground-based operation. The shield is open on the east side, and shielding is provided on that side by an 11-in.-thick lead shutter which moves on roller bearings on a cylindrical track. The lead shutter can be motor driven to the north, and a trailing concrete shield with a 3-ft-diam hole can be positioned so that the whole core is exposed to the experimental area through the large beam opening (see Fig. 4.17). Smaller irises can be placed in the beam opening for collimating purposes.

The reactor is suspended in air in the shield. The innermost part of the shield is a stainless steel tank filled with stainless steel slabs and water. Outside this tank is concrete with the concrete face on the experimental side approximately 14 ft wide and 13 ft high. The concrete shield is penetrated by beam holes for monitoring instruments. A schematic plan view of the reactor in the shield with the iris aligned with the reactor is shown in Fig. 4.18.

The cooling-water hoses and pipes are semipermanently connected to the reactor in the beam shield. A removable sheet metal shed covers the reactor in the beam shield. The reactor can be used in a variety of shields and elevated for operation, but the major use has been and promises to be with the reactor in the beam shield.

Photo 55706

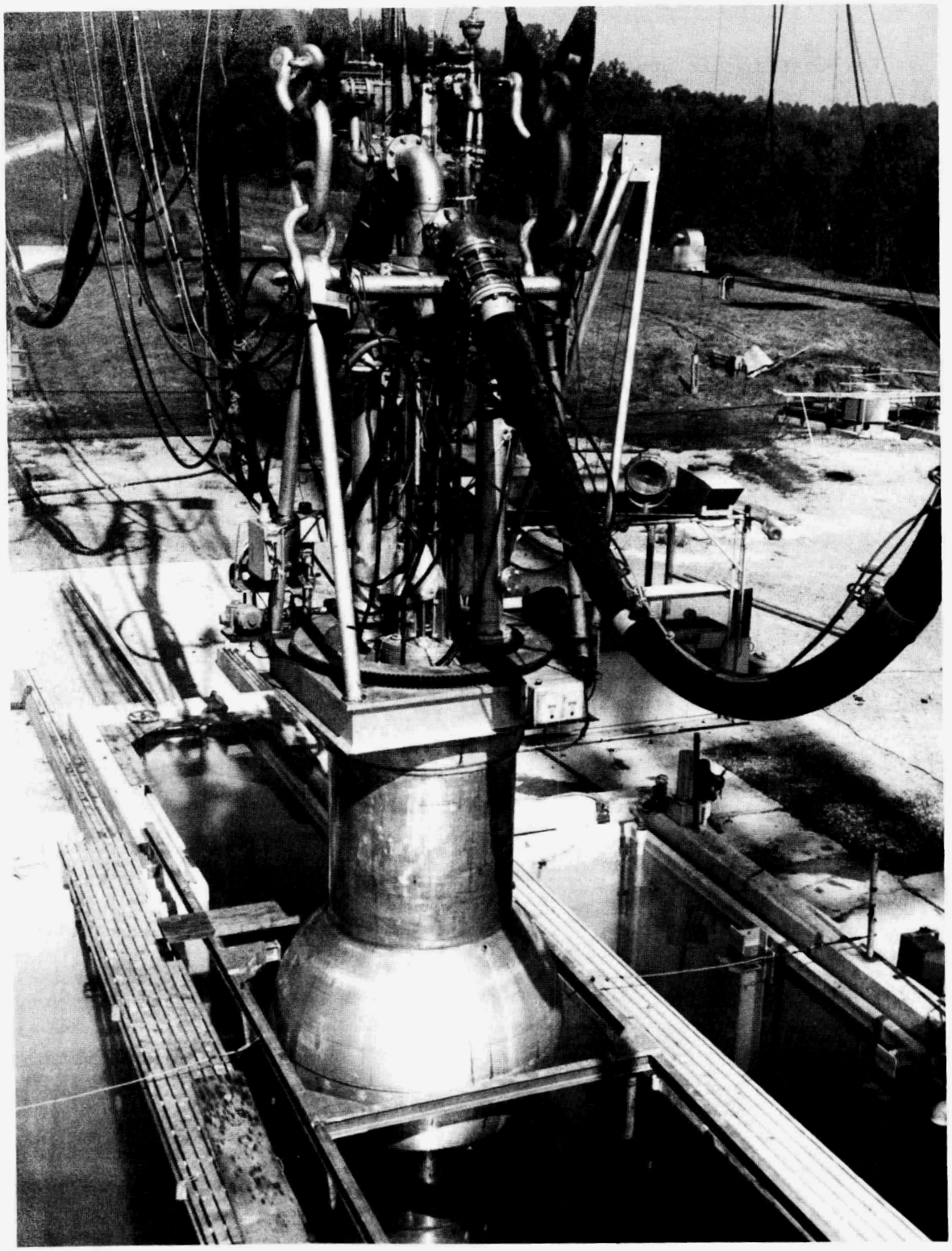

Fig. 4.15. Reactor support platform.

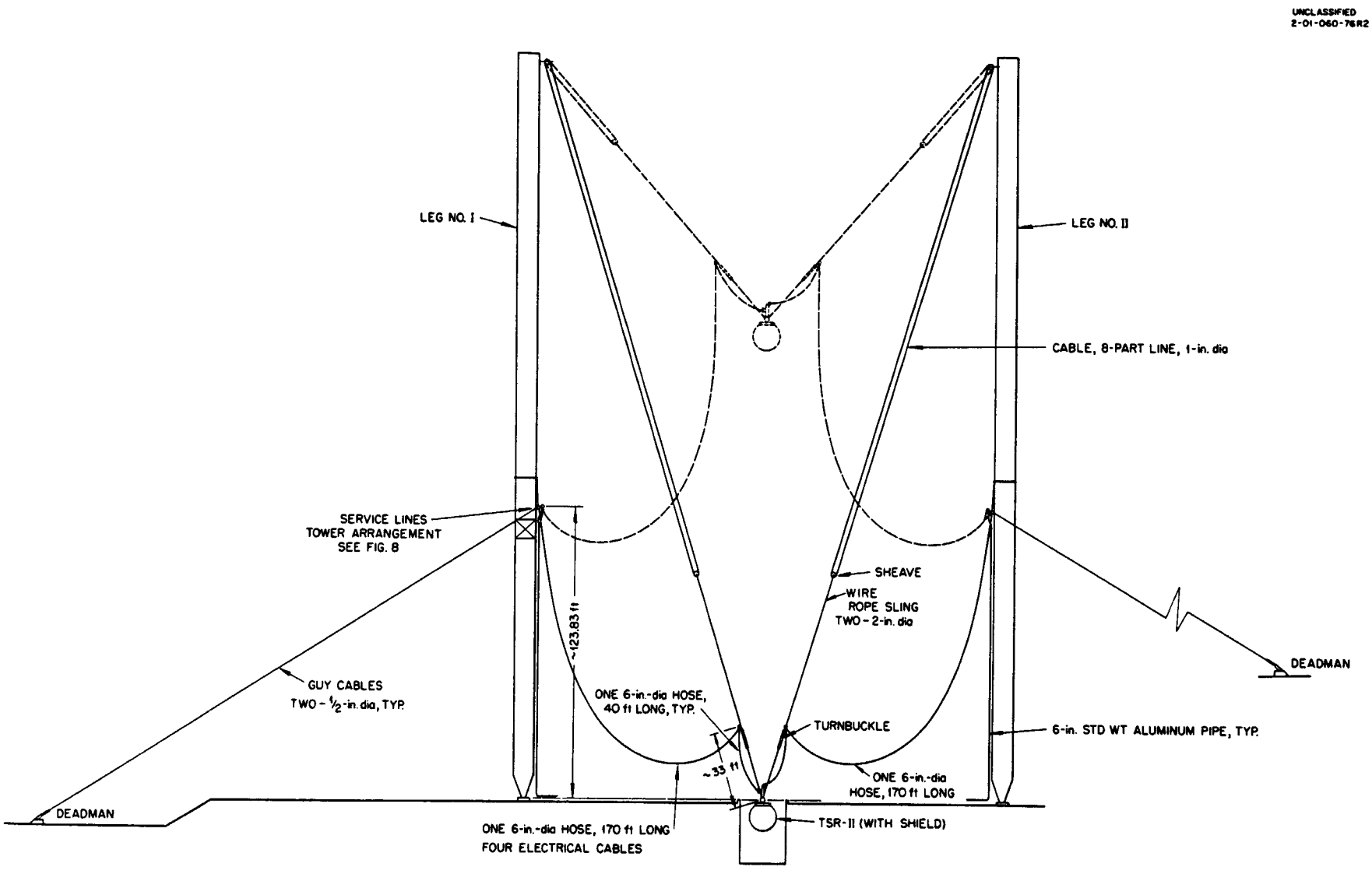

Fig. 4.16. Reactor platform suspension arrangement (TSR-II in beam shield).

ORNL-Photo 0303-75

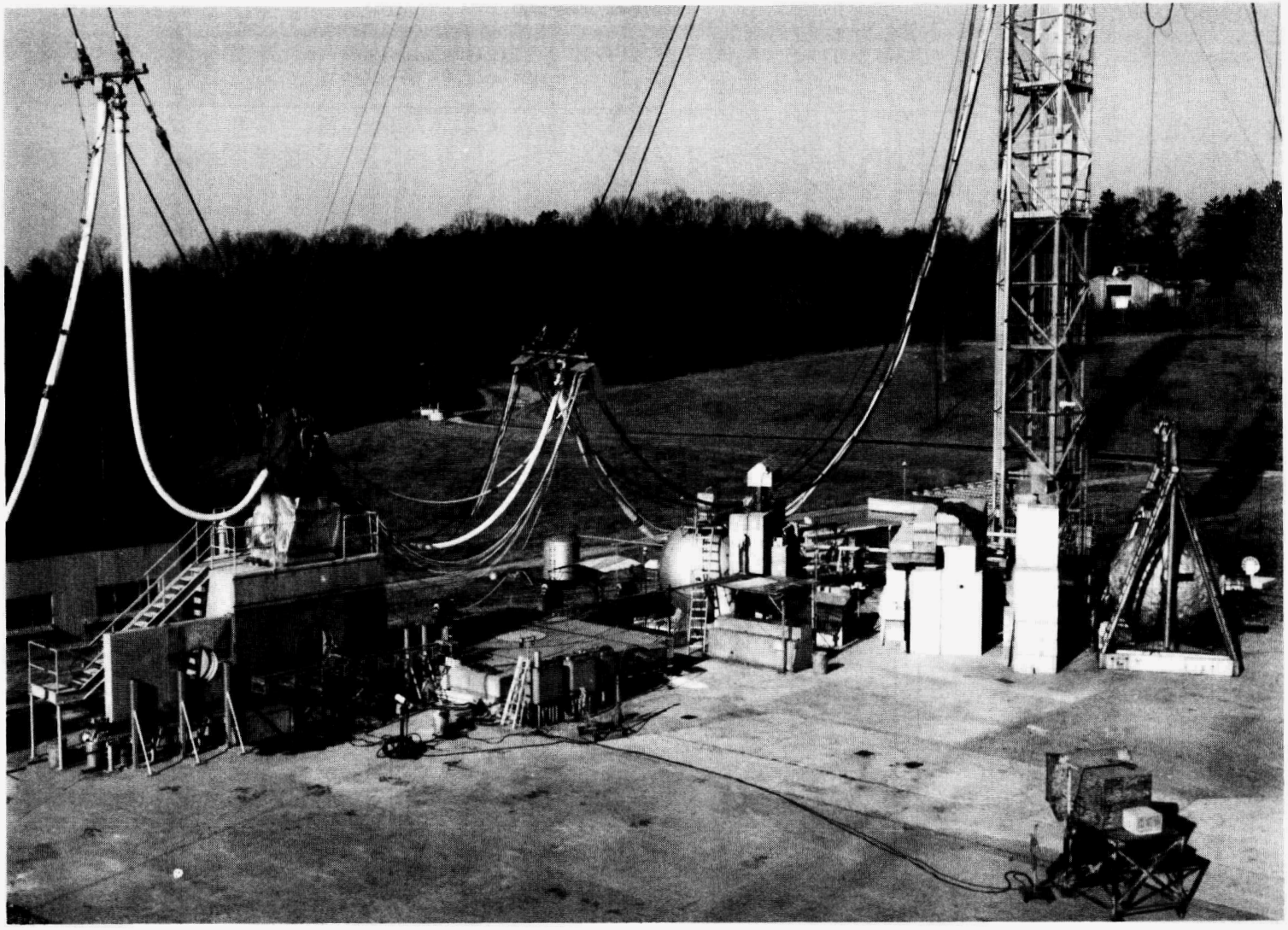

Fig. 4.17. TSR-II Big Beam Shield and reactor shelter.

ORNL-DWG 75-15295A

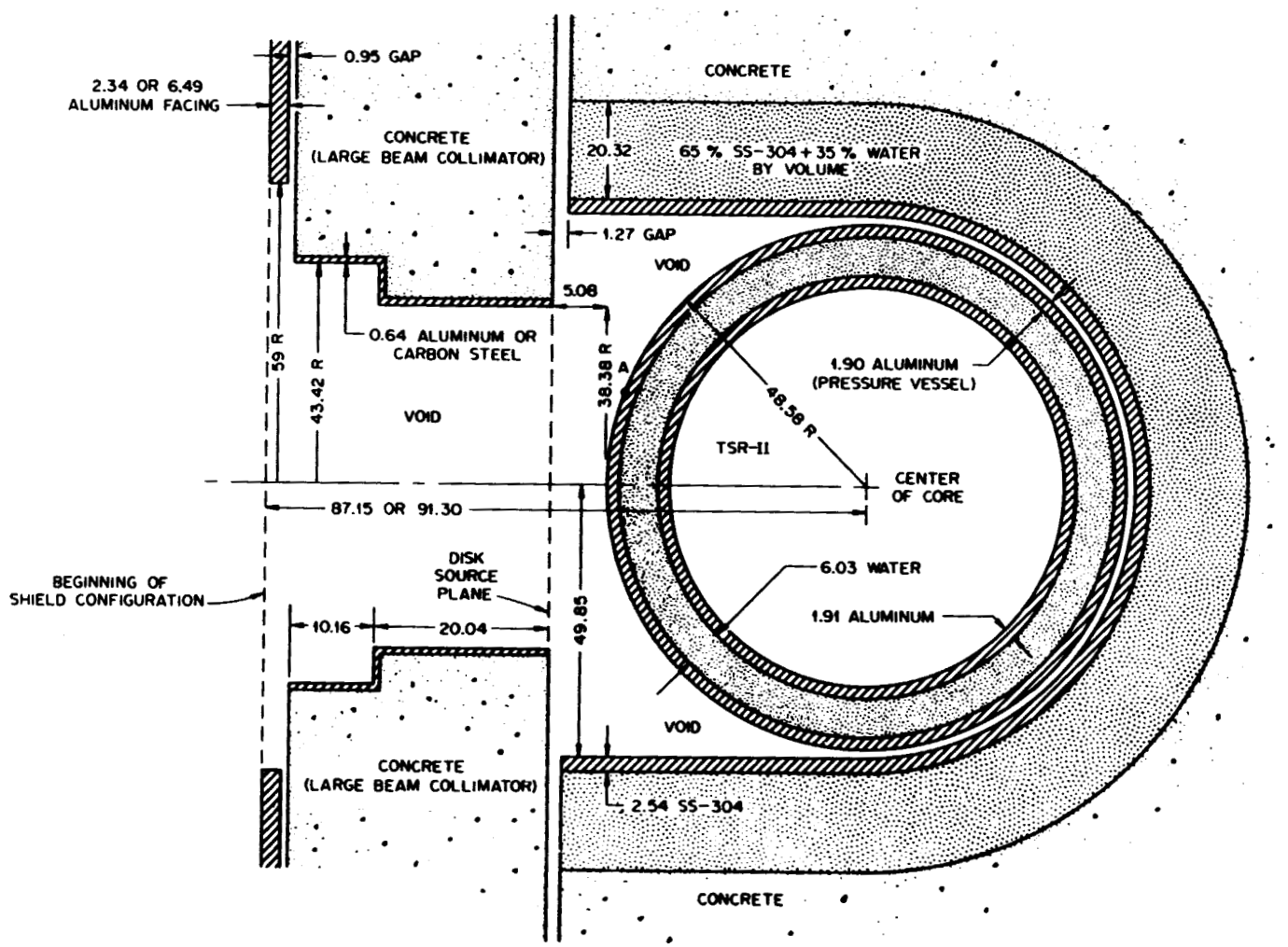

Fig. 4.18. Top view of Tower Shielding Facility Reactor and large beam collimator geometry.

5. TSR-II WATER COOLING SYSTEM - SPECIAL PROCEDURES

Table of Contents

		Page
5.	TSR-II WATER COOLING SYSTEM - SPECIAL PROCEDURES	5-1
5.1	DRAINING THE SYSTEM	5-1
5.1.1	Disposal of System Water	5-1
5.1.2	Draining the Main System	5-1
5.1.3	Draining of Isolated Parts of the System	5-3
5.2	FILLING THE SYSTEM	5-5
5.3	FREEZE-UP PRECAUTIONS	5-6
5.3.1	Prewinter Inspections	5-7
5.3.2	General Measures for Preventing Freeze-Up	5-8
5.3.2.1	Circulation	5-8
5.3.2.2	Heating and insulating of pipes	5-9
5.3.2.3	Space heating of water system rooms	5-9
5.3.2.4	Demineralized water storage	5-9
5.3.2.5	Unheated components	5-10
5.3.3	Specific Measures for Preventing Freeze-Up	5-10
5.3.3.1	Light freeze	5-10
5.3.3.2	Hard freeze	5-10
5.3.3.3	Very hard freeze	5-11
5.4	REGENERATING THE DEMINERALIZER	5-11
5.4.1	Advance Preparation	5-12
5.4.2	Mixing the Chemicals	5-14
5.4.3	Setting of Valves and Pumps	5-14
5.4.4	Water and Air Supply	5-16
5.4.5	Regeneration Procedure	5-16
5.4.6	Restoration to Normal Operation	5-17

5. TSR-II WATER COOLING SYSTEM - SPECIAL PROCEDURES

The normal operation of the water system is written in outline form as part of Chapter 7, "Routine TSR-II Operating Procedures." It is assumed there that the reactor has been operated recently and that the water system is in its normal overnight shutdown condition. Routine preventive maintenance, which is the responsibility of Plant and Equipment Division, is performed in accordance with their computer program. The following sections cover only the more unusual situations.

5.1 DRAINING THE SYSTEM*

5.1.1 Disposal of System Water

The TSR-II water system should be drained through the demineralizer and into the hot-dump receiver. This is accomplished by shutting off all pumps and operating a toggle switch and manual valves at the demineralizer. More rapid draining can be accomplished by connecting a fire hose to the connection near the air compressor and into the drain outside the pump house door. Because of the possibility of above-tolerance radiation levels due to impurities in the waste water, it is required that the radiation level be checked by Health Physics personnel before arrangements are made to remove the water from the TSF area. If Health Physics personnel report that the activity is low enough for transfer, the water will be transferred by tank truck to the Laboratory Low-Level Waste System. Disposal of waste from secondary shields or any experimental configuration which might have components with induced activity should be the same as that for waste which comes from the primary system through the waste drain north of the pool. (Transfer of contaminated water must be made in accordance with Procedure 5.3 of the Health Physics Manual.)

5.1.2 Draining the Main System

The detailed outline which follows will serve as a checklist for those who supervise the draining of the water system. Locations of the various pumps and valves can be determined from the schematic layout of the water system shown in Fig. 5.1.

---

*The special precautions described in the section, "Winter Freeze-Up Protection," should be followed if the system is to be drained in cold weather.

1. Turn off and tag "OFF" (see Section 10.3.3) all the following pumps:

   a. shim pump
   b. demineralizer pump
   c. main pump
   d. dc pump
   e. pressure pump

2. Inspect drain valve LLW-601-4 of the hot-dump receiver to make sure it is closed.
3. Make sure that valve DM-228-1 leading to the demineralizer is open.
4. Make sure that the water level in the expansion tank is above float switch 3. If it is not, open quick-fill valve DM-210-4 and wait until the level rises safely above float switch 3 trip point; then close valves DM-210-4 and DM-210-8.*
5. Open the manual valves at the demineralizer leading to the hot-dump receiver.
6. Move the toggle switch on the demineralizer to the dump position; this will automatically open valve LLW-601-4 and close valve DM-228-6.*
7. Make sure that the water is draining into the hot-dump receiver. If there is doubt, go to the hot-dump receiver tank and listen for the sound of running water.

5.1.3 Draining of Isolated Parts of the System

It should be noted from Fig. 5.2 that not all parts of the water system can be drained by the above procedure. Additional drainage can be achieved in the following isolated parts of the system by operating individual drain valves; a drain hose leading to a portable collector tank should be attached before each drain valve is opened:

1. The 2-in shim-line hose and the 6-in black hoses leading to and from the reactor may be drained through two small valves on top of the reactor. Flanges on the hoses must be opened to drain the lowest sections of these hoses.
2. The long horizontal 6-in pipe leading from the pump house toward tower leg No. II can be drained through a valve located at the pump house end of this section.

---

*Valves DM-210-8 and DM-228-6 are left open when the system is in normal operation.

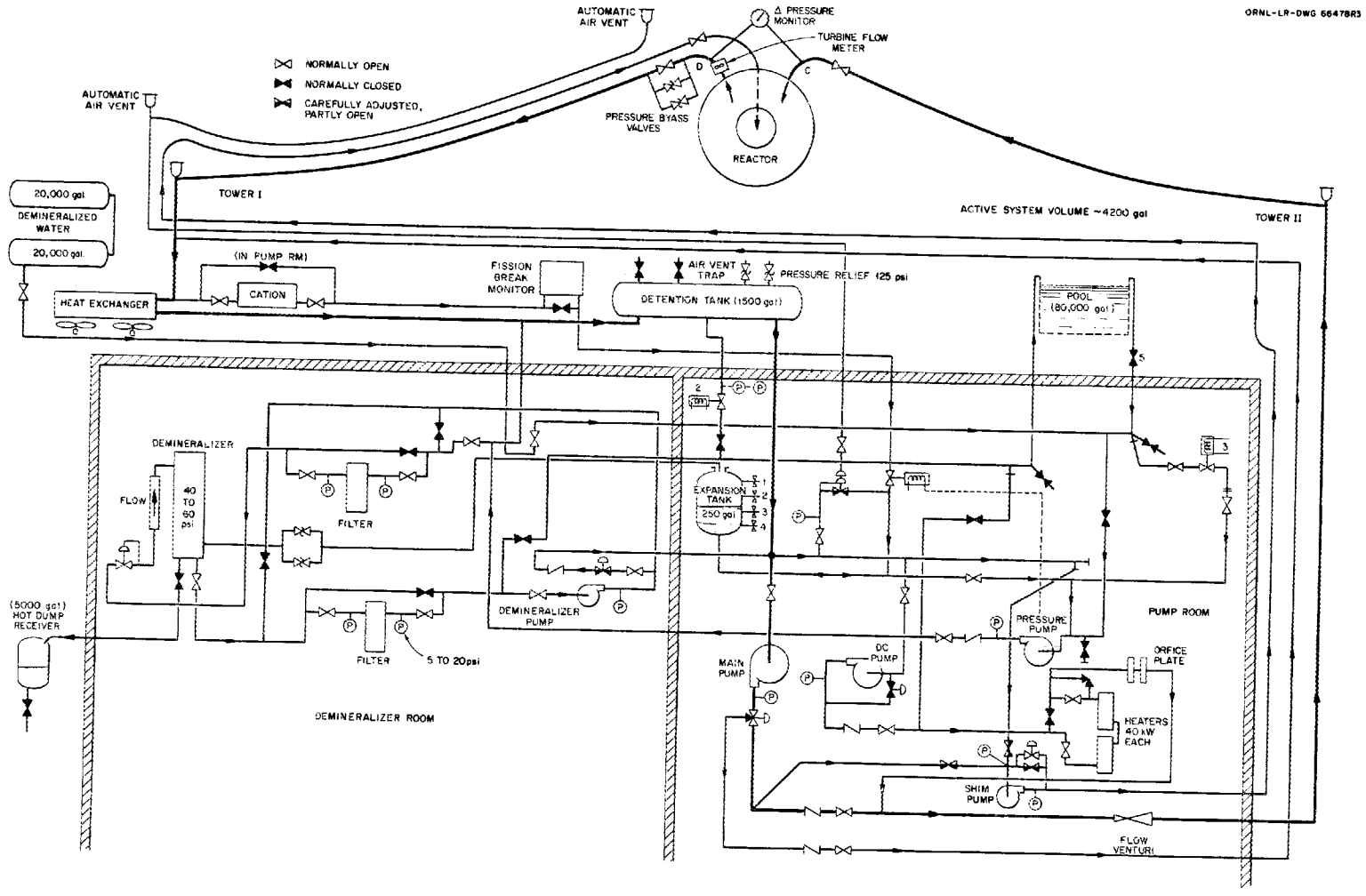

Fig. 5.1. TSR-II water circuits.

ORNL-LR-DWG 66476R

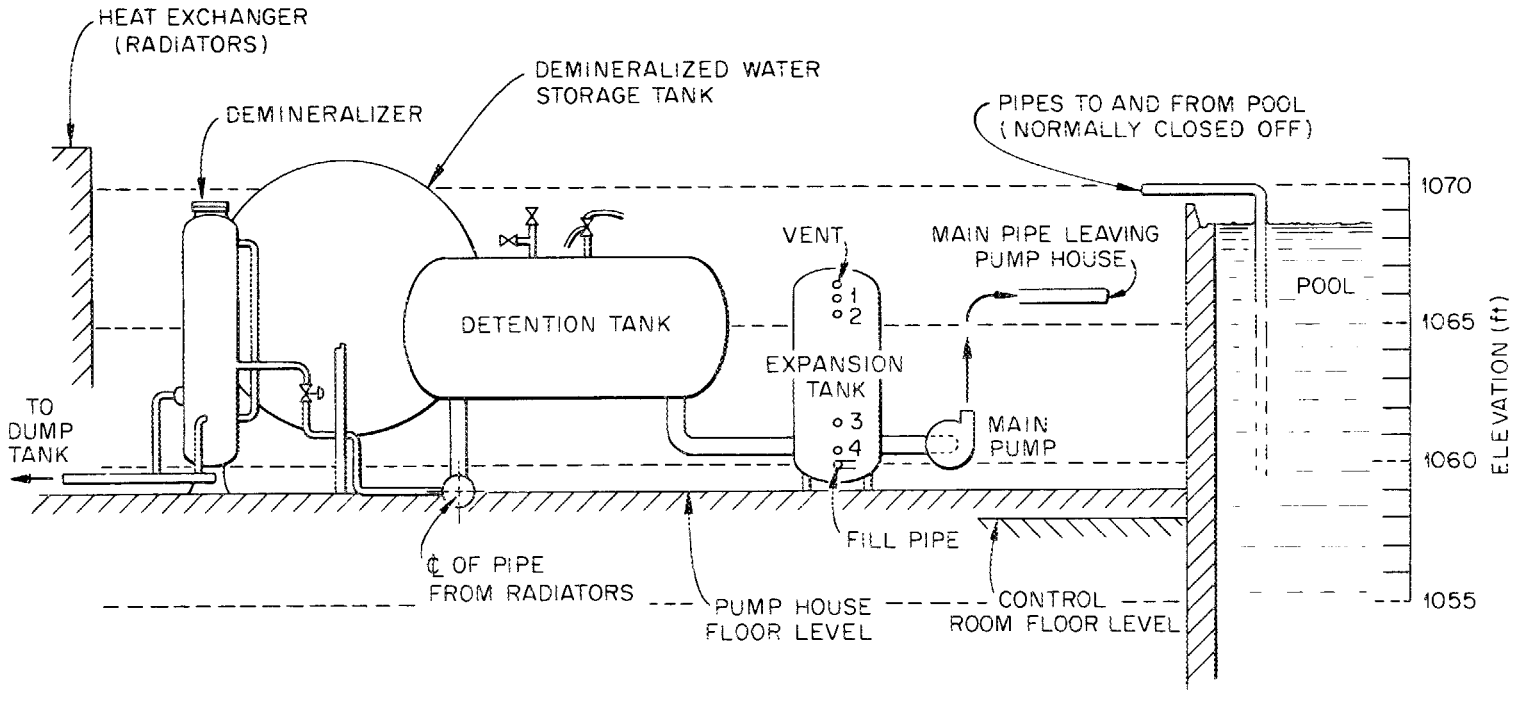

Fig. 5.2. Elevations of certain components of water system.

3. Water remaining in the detention tank can be drained through a valve located directly below the center of the tank.
4. Water remaining in the heat exchanger manifolds can be drained through two valves located below the mainfolds.

The reactor itself can be only partially drained, which is accomplished by unbolting a cover plate and inserting a siphon hose. Also, the section of 6-in pipe between the heat exchangers and the detention tank will remain about half full and cannot be drained, and a few low sections of pipe in the pump room and demineralizer room will not drain.

5.2 FILLING THE SYSTEM

The procedure for those who supervise filling of the water system is as follows:

1. Read the TSR Log for comments about the current condition of the reactor and its water system.
2. See that the reactor is at ground level, that the 6-in butterfly valves and shim-line valves are properly open, and that the drain valves at the reactor are closed.
3. Make sure that the miscellaneous valves which drain isolated parts of the water system (see Section 5.1, "Draining the System") are closed.
4. Go to the pump house to see that all valves are set in their normal condition (open or closed) as shown in Fig. 5.1; the valves are color-coded.
5. Make sure that the pump-house air compressor is running and that manually operated air valves controlling diaphragm valves are set for the desired operation.
6. Check pump house lighting panel switch 11, which must be on in order to ensure power to level switches.
7. See that the toggle switch on the demineralizer is in the normal (not dump) position and that the manual valves leading to the hot-dump receiver are closed.
8. Open the valve to bleed the top of the detention tank to facilitate the escape of air trapped in the water system.
9. Open large valve DM-210-4 (fast fill) which allows the water from the demineralized water storage tank to flow into the makeup tank.

(Note that the sight-glass span on the make-up tank duplicates, in elevation, the bottom half of the demineralized water storage tank. Thus, the water level attainable in the expansion tank by gravity filling is governed by the water level in the storage tank.)

10. When the water in the expansion tank has risen several inches above the level of float switch 3 (see Fig. 5.1), start the pressure pump. The action of this pump may drain the expansion tank, but this is not objectionable after initial filling action has been demonstrated. If the valve on the detention tank is open, the sound of air escaping from this tank will be audible. When water starts flowing through the valve, which may be 1/2 h after the filling operation was started, close the valve. Air will continue to be vented from the water system through numerous float-operated valves located at high points in the system and on the detention tank.
11. When the base pressure gauge (near the main pump inlet) reads 30 to 40 psi, start the dc circulating pump. (The discharge pressures of this pump and of the pressure pump should read only a little higher than the base pressure since there is only small resistance to flow in both cases.)
12. While the system continues to fill, visually inspect the water system for leaks.
13. Remove the insulated metal cover on top of the heat exchangers (a ladder is provided for access to this location), and open two of the vent cocks there. If water does not come out, let the air bleed from the cocks; then close them and replace the cover.
14. When the system is full, the action of the base-pressure regulator will maintain the system base pressure at the level established by the reference pressure head (most often 40 psig), at which time the water level in the expansion tank will start to rise again. When the water is above level switch 3, close valve DM-210-4.
15. Start the main pump, demineralizer pump, and shim pump to sweep trapped air out of these circuits. This step completes the filling of the water system.

5.3 FREEZE-UP PRECAUTIONS

Winter temperatures at the TSF are widely variable, with cold fronts, warm fronts, snow, and freezing rain arriving in a not-too-predictable pattern. Only rarely does the temperature stay below

freezing night and day for as long as a week. Winter temperatures frequently are in the 20°F to 30°F range; however, the low for the season often drops to 10°F and sometimes to below 0°F.

The TSR-II water system must be protected against freezing to maintain the system in operating condition so that the reactor experimental program may be continued during the winter. The procedure to be followed will vary according to the severity of the weather. The three types of local freezing weather are defined below:

Light freeze:	an expected low of 32°F to 20°F, with the temperature rising above freezing during the day
Hard freeze:	an expected low of 20°F to 10°F <u>or</u> the temperature expected to remain below freezing continuously for 24 h or more
Very hard freeze:	an expected low of below 10°F <u>or</u> hard freeze conditions accompanied by winds of greater than 20 mph

5.3.1 Prewinter Inspections

The system used for preventing freeze-up is inspected and made operable when weather predictions dictate (October to December) and are deactivated when weather moderates (March to April). The following actions are to be taken when the system is placed in service:

1. Make sure that both the blowers and the heating elements of the space heaters in the heat exchanger fan house, pump room, and demineralizer room function properly.
2. Raise the thermostat setting on the two 40-kW water heaters and listen for the large relays to pull in. Return the thermostat to a safe setting (50 to 60°F).
3. Raise the setting of each thermostat fed from pump house lighting panel to resistance wire heaters around the pipes until current flow is indicated on its ammeter; then listen for the hum on the noise monitor at each heater on that circuit. Reset all thermostats to safe settings after checking.
4. Check the louvers of the heat exchanger fan building to see that they close properly.
5. Turn on power to the pump and the heater for the demineralized water storage tanks.

6. Make necessary arrangements to supply heat to any experimental or stored equipment that might be damaged by freezing temperature.

5.3.2 General Measures for Preventing Freeze-Up

The general precautions which are taken to prevent serious damage consist of keeping the water circulating, adding heat to it, attaching heaters and insulation to pipes containing noncirculating water, heating the rooms which contain water system components, and permitting only the most massive water-filled sections to remain without circulation, additional heat, or insulation.

5.3.2.1 Circulation

Winter-time circulation is maintained in the main reactor loop by leaving the pressurizing pump and the 5-hp dc circulating pump on, day and night. Water leaving the dc-operated pump passes through two thermostatically controlled 40-kW water heaters and enters the main reactor circuit. When the temperature drops below 20°F, the main pump is also turned on, which not only supplies extra circulation but also adds an additional 30 kW of heat to the water in the form of pumping power. Thus, it can be seen from Fig. 5.1 that the reactor, the 6-in hoses and pipes leading to and from the reactor, the heat exchanger manifolds, and the detention tank are all protected by this circulating water. The shim pump, which provides circulation through the shim line leading to the reactor, is manually started by turning the handle of the shim pump special operation switch (located behind the console) to SPECIAL each time that the reactor-on switch is turned to OFF when freeze-up protection is needed. Conversely, this handle must be turned to NORMAL each time the reactor is to be operated since an interlock prevents the scram circuits from being cleared with the scram reset button while the special shim pump switch handle is in the ON position. (The shim pump starts automatically when the reactor-on switch is in the On position, and there is no annunciator indication if the shim pump special-operation switch is on OPERATE.

Every effort should be made to avoid interfering with the protective circulation of water through the TSR-II water system in cold weather. Maintenance of the system or changes in the reactor which require stopping the water circulation should be postponed if at all possible until weather conditions are favorable. If it becomes absolutely

necessary to drain the water, the system should be drained as completely as possible as outlined in Section 5.2.

5.3.2.2 Heating and insulating of pipes

Where possible, all exposed pipes containing noncirculating water are heated electrically by insulated resistance-wire type of heaters with typical ratings of 50 to 500 W each. The heaters are wrapped around the pipes and are covered with 2 or 3 in of insulation. A final outer cover of thin reflective metal sheet is added where practical. The heaters are fed from the electrical distribution panel located in the pump house. The location of the pipes and the identification of the circuits which protect them are listed at the distribution panel.

The wraparound heaters are checked routinely to ensure that all are in working order. Ammeters in the circuits are helpful but will not demonstrate the integrity of the individual heaters in cases where several heaters are fed through the same ammeter. In such cases, an electrical noise monitor is used. Placing the monitor probe next to an insulated pipe will produce a distinct hum in the earphones if the heater is carrying current. Each thermostat setting is raised temporarily during the test to ensure the flow of current through the heater being checked.

5.3.2.3 Space heating of water system rooms

The pump room and the demineralizer room are equipped with thermostatically controlled electric hot-air heaters rated at 7.5 kW and 5 kW, respectively. The motors which drive the various pumps supply additional heat to these rooms. The exhaust fans which remove the heat from the pump motors during the summer are left turned off during the winter. The two heat exchanger radiators are mounted horizontally, and reactor heat is removed by two large fans which blow air upward through the radiators. Large movable louvers which cover the top and sides of the heat exchanger building are checked for proper sealing when they are closed and if necessary are adjusted to eliminate any gaps. Four space heaters of 5 kW each provide heat for the heat exchanger building.

5.3.2.4 Demineralized water storage

The demineralized water is stored in two 20,000-gal tanks, is circulated by a pump that is thermostatically controlled to start when the

air temperature drops below 40°F, and is heated by a 40-kW heater which is thermostatically controlled to turn on when the water temperature is below the set value (50-60°F). The horizontal pipe connecting the two storage tanks is insulated. The line from the tanks to the pump house is insulated and heated where it is above ground.

5.3.2.5 Unheated components

The hot-dump receiver tank has no insulation or source of heat but is expected to remain empty most of the time. If water is received from the reactor system, it should be in the amount of several hundred gallons, which should offer reasonable assurance against damage to the tank from freezing. The pipeline leading to the hot-dump receiver will empty itself and thus be protected.

Several stub lines leading to drain valves, such as those below the heat exchanger, have no flow and no external source of heat, but these insulated water-filled sections are expected to receive adequate heat from the larger bodies to which they are attached. During very cold weather, it may be advisable for the valves to be left slightly open.

5.3.3 Specific Measures for Preventing Freeze-up

During the winter months, observe the following procedures for putting the reactor in standby condition overnight and over weekends:

5.3.3.1 Light freeze

1. Leave the pressure pump on.
2. Leave the dc-operated circulating pump on.*
3. Leave the shim pump on.
4. Close the windows in the shed over the reactor.

5.3.3.2 Hard freeze

Follow all the procedures for a light freeze plus the following:

1. Leave the main pump on.

---

*If the 40-kW water heaters have been removed from the line for maintenance or for a reactor heat-power run, the main pump should be left on also.

2. Turn off the exhaust fans in the pump room and in the demineralizer room.
3. Inspect the heat exchanger fan house louvers to make sure that they are tightly closed. Push individual louvers to close any gaps.
4. Arrange for the TSF to be inspected twice each shift (every four hours) by the Operations Division shift patrol.
5. Make sure that adequate instructions are left for the inspector, such as informing the inspector what gauges are to be read, what indicator lights are to be observed, etc.
6. Leave a list of names and phone numbers for the inspector to call in case of trouble.

5.3.3.3 Very hard freeze

1. Follow all the procedures for a hard freeze except that in step 4 make the inspection every two hours rather than every four hours.
2. Open the drain cocks at the heat exchanger manifolds to provide steady dripping.
3. Add heaters to keep pipes in the reactor turret warm; floodlights may be used.
4. Make sure that heaters and pumps for the 20,000-gal demineralized water storage tank and for all collimator shields are turned on.
5. Take whatever precautions are necessary (add heaters, add antifreeze, drain water, etc.) for any special equipment in use or stored at the TSF.

5.4 REGENERATING THE DEMINERALIZER

It is important that the reactor cooling water be kept clear and clean both to facilitate observation during maintenance and to prevent fouling of baffles and fuel-cooling channels. It is equally important that the mineral content of the reactor cooling water be kept relatively low to minimize its radioactivity. However, extremely pure water tends to increase corrosion effects in some metals. Therefore, the demineralizer will be run as necessary to keep the resistivity of the main cooling stream between 400,000 and 2 million ohm-cm.

The demineralizer will be regenerated whenever the output of the demineralizer falls below 500,000 ohm-cm while the system is in operation. The demineralizer will be recharged when the resin is damaged,

as indicated by the flow rate through the demineralizer falling below half the normal flow and by the shortened time between regenerating cycles. The resin level will be inspected during shutdown for complete system inspection. If inspection indicates that the resin is in good condition but that some of it has been lost, anion resin may be added to bring the resin depth up to four feet. The cartridges in the demineralizer inlet and outlet filters will be changed when the pressure drop through the particular filter exceeds 15 psi. The Shift Supervisor will schedule the regeneration or recharging when necessary and will perform the actual regeneration with at least one other person present. The regeneration will be performed when it is safe for the main pump, dc-powered circulating pump, and shim pump to be turned off.

The materials and equipment required for regeneration include 70 lb of caustic soda in the form of sodium hydroxide flakes, 170 lb of 60% nitric acid (40° Baume'), rubber gloves, face shields, acid pump, "Do Not Operate" tags, and three standard 55-gal stainless steel drums.

The Penfield demineralizer manual, the demineralizer pipe and valve diagram (Fig. 5.3), and the water system diagram (Fig. 5.1) are helpful supplements to the regenerating instructions which follow.

5.4.1 Advance Preparation

On at least the day before the demineralizer is to be regenerated, the following items should be checked for the condition specified:

1. The hot-dump receiver tank is nearly empty, and its exit valve is closed.
2. The 40,000-gal demineralized water storage system is at least one-fourth full.
3. The Nash air compressor is working properly with at least 65 psi air pressure indicated at the demineralizer.
4. The reactor pressure pump is operating properly, and the water system base pressure is normal (about 40 psi when the reactor is in the Big Beam Shield).
5. The radiation levels are low enough to permit the regeneration to proceed without restriction, or the restrictions and/or necessary shielding are provided.
6. The weather is predictably mild enough that the system will not freeze during the time when the pumps are not operating.

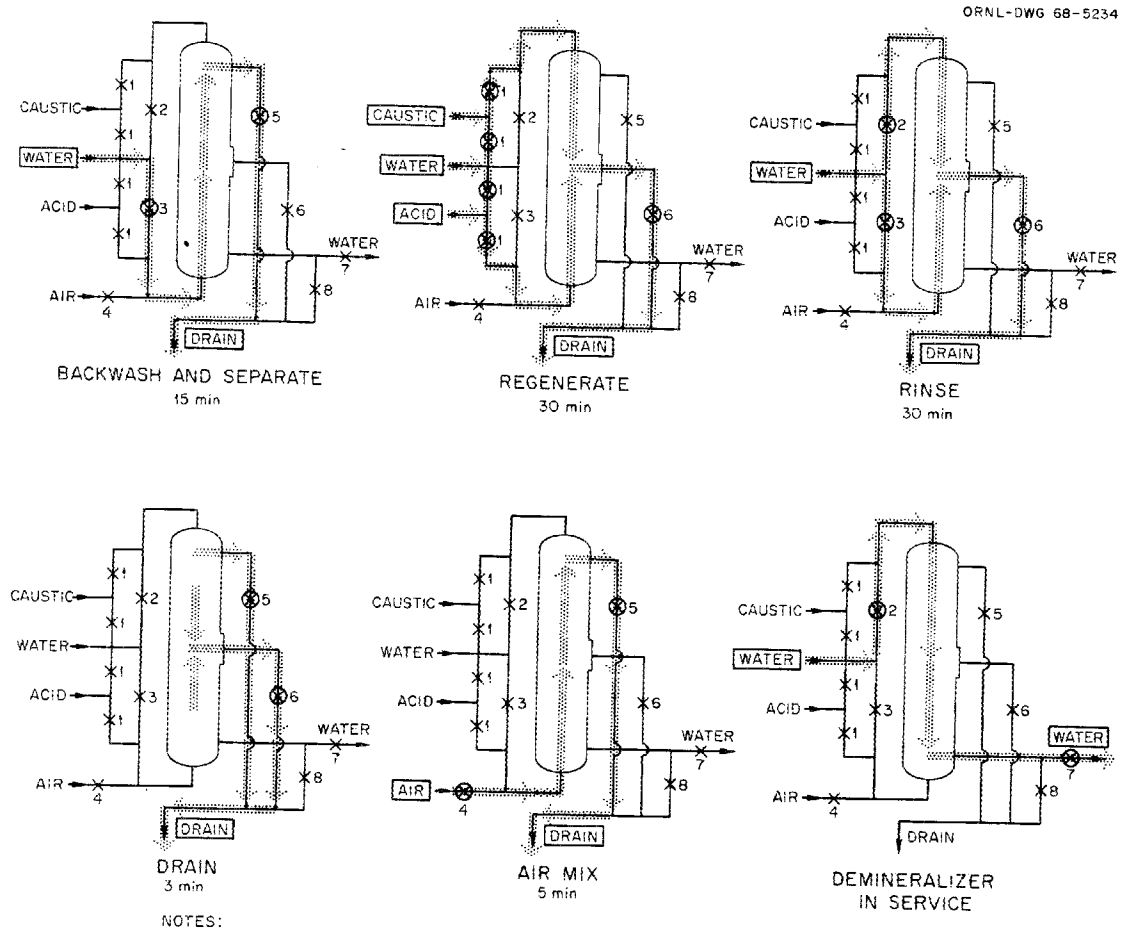

NOTES:

1. OUTLINED ITEMS IN EACH DIAGRAM ARE ACTIVE DURING THAT PART OF THE CYCLE.
2. VALVES 1—6 ARE CONTROLLED BY AUTOMATIC TIMER.
3. VALVES 7 AND 8 ARE CONTROLLED BY A TOGGLE SWITCH.
4. VALVES 7 AND 8 STAY CLOSED DURING REGENERATION CYCLE.

Fig. 5.3. Demineralizer water circuits.

5.4.2 Mixing the Chemicals

1. Observe the following safety requirements when handling the strong chemicals required for regeneration:

   a. Never work alone.
   b. Test the safety showers.
   c. Wear protective face mask, rubber apron, and rubber gloves.
   d. Avoid breathing corrosive dusts and fumes.
   e. Avoid contact of chemicals with the skin; if contact is made, rinse immediately.
   f. DO NOT ADD WATER TO THE ACID.
   g. Do not let acid from eductors or containers drip onto concrete floor as nitric acid will attack concrete.

2. Assemble all materials required for regenerating at the safety-shower and loading dock area of the demineralizer room.
3. Clean the stainless steel mixing drums.
4. Prepare the caustic solution as follows:

   a. Add 24 in. of water to each of two stainless steel mixing drums.
   b. Gradually add about 35 lb of caustic flakes (sodium hydroxide) to each drum. The caustic should be poured slowly and in small amounts in order to avoid creating a large amount of dust from the flakes and to avoid generating an excessive amount of heat as the flakes are dissolved in the water. After each addition of caustic, stir until that batch is dissolved.
   c. Replace the lid on the caustic flakes remaining in the shipping can and discard.

5. Prepare the nitric acid solution (20% conc.) as follows:

   a. Add water to the indicated line (19 in) in the third mixing drum.
   b. Add 170 lb of 60% nitric acid (40° Baume') and stir. This should bring the liquid level to the second line (28 in.).

5.4.3 Setting of Valves and Pumps

To regenerate, it is necessary that some valve settings be changed from their normal condition; each valve should be tagged as it is

changed to ensure that it will be restored properly at the end of the regeneration.

1. To prevent corrosive regenerating chemicals from entering the main reactor water system,

   a. turn off and tag the demineralizer main circulating pump, dc-powered circulating pump, and shim pumps; and
   b. close and tag the valves at the filter in the line leading from the demineralizer to the demineralizer pump.

2. To ensure free drainage of rinse water from the demineralizer into the hot dump receiver,

   a. open the manual block valves which are in series with and located next to demineralizer valves PR-301-1, DM-228-1, and LLW-601-1 (see Fig. 5.1); and
   b. make sure that the eight blocking valves which are in series with the manually operated air valves are open; these small valves, which are part of the demineralizer controls, are located high on the back face of the demineralizer cycle control panel.

3. To ensure maximum flow of water into the demineralizer during regeneration,

   a. open completely the valve at the pressure pump exit;
   b. open the fast-fill valve (DM-210-4);
   c. open the valve which bypasses the filter upstream of the demineralizer; and
   d. turn on the fill pump.

4. To assure proper air supply to the demineralizer,

   a. open the manual valve near the exit of the Nash air compressor tank in the line leading to the demineralizer;
   b. open the large air valve which is upstream of the air pressure regulator located at the lower left front of the demineralizer; and
   c. make sure that the air pressure as indicated by the gage on the demineralizer panel reads 65 to 85 psi.

5.4.4 Water and Air Supply

In normal industrial applications, the demineralizer is supposed to be supplied with a copious amount of water at 50 psi. In our particular application, the TSR-II fill pump has difficulty maintaining 50 psi water pressure at the flow rates required for regenerating; but the reduced flow and pressure locally achievable apparently are marginally satisfactory. If there is any doubt about the adequacy of water flow or pressure during a particular phase of the regeneration process, the clock pointer on the demineralizer panel should be moved to Service, the fill pump allowed to raise the system pressure up to the normal base pressure value, and then the interrupted phase of regeneration resumed in a clockwise procession.

The compressed air pressure is supposed to always be 10 psi higher than the demineralizer water pressure to ensure the proper operation of the diaphragm-type valves. During the Mix portion of the cycle, the air pressure may drop considerably below its usual 70 or 80 psi. It will be noted, however, that the demineralizer water pressure also drops considerably below its normal; so a satisfactory pressure differential will probably still be maintained. If it is believed that a higher air pressure must be achieved, the dial hand should be moved to Service for a short time to give the air compressor time to catch up and then switched clockwise again to Mix.

5.4.5 Regeneration Procedure

When all the previous steps are properly completed, the Shift Supervisor and at least one other person will proceed with the regeneration as follows:

1. Place the dip lines so that the caustic solution will be drawn into the upper section and the acid solution drawn into the lower section of the demineralizer.
2. Start the regeneration process by moving the hand of the cycle clock in the clockwise direction to the beginning of the dial section marked Backwash and Separate. The built-in clock will indicate the amount of time that each valve arrangement shown in Fig. 5.3 should be used through the various stages of the regeneration cycle. Never move the hand counterclockwise. If more time appears to be needed for a particular part of the cycle, move the hand rapidly clockwise to the beginning of that stage.

3. During Regenerate, throttle the uptake flow so that the caustic and acid will be drawn slowly and uniformly into the demineralizer throughout the time allotted to Regenerate.
4. Leave a heel of unused solution 2 to 3 in. deep in the bottom of each mixing drum to minimize the uptake of insoluble residues.
5. Rinse the residual material down the drain leading to the hot-dump receiver, and rinse the mixing drums thoroughly with water.
6. Check the air pressure downstream of the large pressure regulator at the lower left front of the demineralizer. Adjust the regulator if necessary so that a reading of 10 psi is achieved while the Mix is in progress.

5.4.6 Restoration to Normal Operation

The Shift Supervisor will make the following adjustments to restore the indicated valves to normal and will remove the tags placed there during Procedure 5.4.3:

1. Close both valves in the air line.
2. Close both filter bypass valves.
3. Close the fast-fill valve (DM-210-4).
4. Adjust the fill pump exit valve.
5. Close the manual blocking valves in series with demineralizer valves PR-301-1, DM-228-1, and LLW-601-1.
6. Open the valves at the demineralizer exit filter.
7. Remove tags from the main circulating, dc-powered circulating, shim, and demineralizer pumps.
8. Set the manual valves to the Demineralizer in Service condition and check operation of the demineralizer.

6. HOIST OPERATING PROCEDURES

Table of Contents

	Page
6. HOIST OPERATING PROCEDURES	6-1
6.1 OPERATIONAL SAFETY	6-1
6.2 OPERATION OF MAIN HOISTS	6-2
6.3 OPERATION OF CONSTANT-TENSION HYDRAULIC HOIST	6-3
6.3.1 Startup	6-3
6.3.2 Reeling in Cable	6-4
6.3.3 Relieving Cable Tension	6-4
6.3.4 Reeling Off Cable	6-4
6.4 EMERGENCY LOWERING OF LOADS	6-4
6.5 SIGNALING	6-5
6.6 SLACK CABLE PROTECTION SYSTEM	6-6
6.6.1 Causes of Slack Condition	6-6
6.6.2 Description and Operation of System	6-6
6.6.3 Operation of Hoists During Conditions When Cable Might Go Slack	6-7
6.6.4 Slack-Bar Override in Emergency	6-8
6.6.5 Checking the Slack Cable Protection System and the Altitude Indication Selsyns	6-8
6.6.5.1 Preparation	6-9
6.6.5.2 Inspection	6-9
6.6.5.3 Operational checkout	6-9

6. HOIST OPERATING PROCEDURES

Hoist operation can alter the reactor shielding, possibly initiating a severe radiation hazard, and can expose the reactor to physical forces which might damage or destroy the reactor or associated equipment. Therefore, only an authorized Senior Reactor Operator or Reactor Operator or a trainee under direct supervision of an authorized Senior Operator will operate the hoists.

Limitations on size and positioning of loads are specified in section 9.16 along with minimum check requirements. Since it is impractical to completely delineate the procedures to be followed for operating the hoist, operator judgment as demonstrated in on-the-job training is on the utmost importance. A knowledge of the procedures set forth below cannot be considered to constitute full training in hoist operations.

6.1 OPERATIONAL SAFETY

Prior to manipulating control levers or attempting to move loads, observe the following preliminary precautions:

1. Read the inserts recorded in the TSF Log to date starting at least one week back.
2. Perform hoist slack-line protection checks if required.
3. Check the cable on each hoist drum to see that it is properly in the grooves.
4. Check each hoist line to ensure that it is clear from its hoist drum to the tower base sheave.
5. Make sure that no material is placed on or close to the resistor bank for each hoist. (The resistors generate enough heat to turn red during low-speed hoisting or lowering of loads.)
6. Check that the hoist emergency battery rectifier is operating.
7. Note that the level of water in all batteries in Building 7703 is normal and that the bubbling rate is not excessive in any battery.
8. Consider present weather conditions and inspect portions of the system which might be affected. Do not hoist loads from secure positions when wind velocity is above 40 mph.
9. Obtain a weather report and consider any precautions that should be taken.
10. Examine the loads thoroughly to locate any tools or parts which might fall. Remove any unnecessary attachments, anchor lines, extension cords, etc.

11. Have Quality Department perform load tests of hoist if reactor is to be lifted more than 50 ft and load tests have not been made for more than five years.

While the loads are in the vicinity of any ground clutter, hoist movement will be restricted to the first three speeds, and the signalman will direct the hoist operator according to the signal procedure. Usually, the more experienced operator should be signalman.

6.2 OPERATION OF MAIN HOISTS

1. Select the desired control station (ramp or pool).
2. To operate with the constant-tension hoist, insert key in control handle, turn handle to RESET, and then turn handle to OPERATE position. (Motor and fan on constant-tension hydraulic hoist should start.) To operate without the constant hoist, insert key in control handle and turn handle to operate. This type of operation is possible only at the pool control station.
3. If the hydraulic hoist is not to be used, relieve its line tension by turning pressure control handle counterclockwise to the DECREASE position and, if load is attached, by allowing the load to reel cable off the drum until an equilibrium condition is reached. (NOTE: If the hydraulic hoist is to be operated, follow the procedure outlined in section 6.3.).
4. Depress button marked BRAKE RELEASE.
5. Depress the "dead-man" treadle and do not release until it is desired to stop all hoist movement.

The controller handled must be returned to the Neutral or Vertical position and then moved to a raise or lower position. There are five speeds for hoisting and a brake release only and four driving speeds for lowering. The hoists should now move unless the slack-line system power is off or one or more of the following safety or limit devices have operated:

<u>Slack-line bar switches actuated</u> - located immediately below and toward power train of each drum (3 bars - 6 switches)

<u>Dead-man switch not actuated</u> - switch at each hoist station; relay located in small control rack in hoist house

<u>Travel limit switch actuated</u> - located in box on end of each drum shaft

o.c. - a.c. relay energized - located in relay cabinet of each hoist; the 3-in balance arm must not touch the core of either coil of this over-current relay

Overspeed switch actuated - located on intermediate gear shaft behind each hoist drum

Cable drum limit switch actuated - located on arm at south end of each drum

Mechanical brake hand-release limit switch actuated - two, located on each drum drive motor shaft

Undervoltage relay deenergized - located in each hoist relay cabinet

Tag line limit switch actuated - located in box on tower leg I at 115-ft level; relay located in monitron box at ramp hoist control station; prevents up travel on No. 2 hoist and down travel on No. 1 hoist (not presently connected for operation)

Crew compartment limit switch actuated - located on crew compartment balance arm; the relay and override buttons are located on the monitron box at the ramp station (not in use)

6. Terminate hoist motion by releasing dead-man treadle; then return controller handles to NEUTRAL position.
7. To terminate hoist operations, depress stop button on switch panel. Do not deenergize by using the main breaker button on front rim of hoist control station. (This cuts off battery charger for hoist emergency power; see section 6.4, "Emergency Lowering of Loads.")
8. If it is desired to operate from the other station,

   a. remove the control key from the station in use (removable only when key control handle is in OFF position);
   b. insert key in control station selector switch at selected station; and
   c. proceed as in steps 1 through 7.

6.3 OPERATION OF CONSTANT-TENSION HYDRAULIC HOIST

6.3.1 Startup

1. Select the desired control station (ramp or pool).
2. Insert key in control handle; turn handle to RESET; then turn handle to OPERATE position.
3. Set the brake, which locks the drum, by turning the hoist key switch handle to BRAKE SET position.

4. To release the brake, turn the positioning hoist key switch to the OPERATE position and depress the brake release button.

6.3.2 Reeling in Cable

1. Turn the pressure control handle to the INCREASE position and hold until the line movement begins.
2. Observe pressure the gauge. Cable pull in pounds is three times the gauge reading. Limit cable pull to 5,000 lb.

CAUTIONS

1. Cable will not move with brake set.
2. Gauge shows only the resistance to drum rotation; release handle when the cable starts moving.

6.3.3 Relieving Cable Tension

Turn the handle counterclockwise to the DECREASE position and allow the load to reel cable off the drum. When equilibrium is reached, the cable drum should stop.

6.3.4 Reeling off Cable

A 75-lb cable pull is required to pull cable off the idle system. Cable may be unreeled hydraulically by hand adjustment of the balance valve, which is located on the north portion of the hydraulic hoist piping.

CAUTIONS

1. Always decrease pressure at the control station to its limit before changing the balance valve setting.
2. Running cable must be kept taut or backlash will occur instantly. To stop drum, turn switch to BRAKE SET.

6.4 EMERGENCY LOWERING OF LOADS

An electrical power failure will cause the automatic brakes to set immediately. To lower the load with the power off, it is necessary to use the emergency system with controls located at the top of the positioning hoist control panel. (Power is supplied by the 28-V battery system located in the hoist house.) The emergency lower key switch is immediately above the positioning hoist key switch. The line of brake-release buttons to the right of the emergency lower key switch affects

each hoist in the same sequence as the control levers. The last switch to the right releases the brake on the hydraulic hoist or positioning hoist.

To lower the loads, observe the following procedure:

1. Place regular control key switch handle in OFF position.
2. Insert the key into the emergency lower button switch; turn key 90° clockwise; then depress the key and rotate 90° counterclockwise (key and button should remain depressed).
3. If load movement is expected to unreel line from the hydraulic hoist, place the hydraulic hoist emergency brake release switch in BRAKE RELEASED SOLENOID OPEN position.
4. Depress necessary push buttons to lower loads. Guide the loads by lowering with one hoist of each pair as necessary

6.5 SIGNALING

Most of the time, the loads at the TSF can be moved safely with the operator observing the loads either directly or with two TV recivers. In those cases where a signalman can be stationed to observe the movement of the loads better than the operator, the following hand signals should be used to inform the operator:

Hoist selection - Indicate which hoist or load is desired to be active by pointing with one hand to the load, pointing with one hand to a corner hoist load line or placing palms together, and then pointing at south center or north center hoist line.

Speed - Indicate the speed of operation by the vigor of hand movements.

Hoist (signal to raise) - With the forearm vertical, make small horizontal circles with the hand.

Lower - With arm extended, hand below hips, make small vertical circles with the hands.

Travel - Hold forearm vertical with hand open, then wave forearm in direction of travel.

Stop - Extend arm, spread hand, and hold position rigidly.

Emergency stop - Extend arm(s) and hand(s) level with hips and then move hand(s) quickly to right and left.

6.6 SLACK-CABLE PROTECTION SYSTEM

If the slack cable on a hoist drum were to become snagged, it might break if operation is continued. If the cable were to break when a shield is suspended, the shield would probably swing through a large arc to the ground or into a tower leg and demolish the whole tower complex.

6.6.1 Causes of Slack Condition

The cable on one or more of the drums may become slack if a load which is suspended from any of the six major hoists is not sufficient to overhaul the cable on the floating sheaves and the tower-mounted sheaves when the hoist drums are rotated to lower the load. This danger is compounded during icy weather because, with cable movement, any ice or snow usually accumulates in the floating sheave and acts as a brake even for maximum loads. Moreover, if the hoists have remained idle during several days of snow or freezing rain, ice could have accumulated in a floating-sheave block even though none is visible on the cables.

6.6.2 Description and Operation of System

The slack-cable protection system consists of sensors on each hoist cable drum which will detect movement of the cable away from the drum and electrically stop all hoist operation when a slack condition occurs. A light will indicate that trouble exists, and another light will indicate on which hoist the slack has occurred (more fully described below). The slack-cable protection system is interlocked electrically so that no hoist drum motion is permitted unless the system is energized.

The sensors on each hoist drum are three bars which run the length of the drum. A cable must move two of these bars to get out of its groove. Cable sag below the drum will move the third bar. Movement of each bar will operate microswitches at opposite ends of the bar which will actuate two independent relays (located in the relay cabinet for that hoist), either of which will interrupt all hoist action and turn on two lights and a bell at each hoist station (the bell can be turned off by depressing the slack-cable system control button at either control station). Each slack bar is capable of dropping out the same two relays. The slack-cable system control light which indicates a fault will stay on until all slack bars return to their normal positions. The light that indicates the hoist on which the slack occurred will remain on until the

slack condition has cleared and its reset button in the hoist house has been operated. The latter requirement is to ensure that the cable on the drum is inspected before the light is cleared.

If a slack condition occurs and clears, it is possible to reset the hoist control dead-man switch and operate the hoists. However, it is required that the hoists be observed before continuing if slack conditions occur or might occur (see section 6.6.3). If a slack fault exists on a hoist, its override button has to be pushed in order to operate any hoist or to clear the fault. If the fault does not clear, the warning alarm will sound again when the override button is released. Conditions for use of the override are specified in section 6.6.4.

6.6.3 Operation of Hoists During Conditions When Cable Might Go Slack

When the operator knows or suspects that conditions exist which could cause the cable to go slack, the following procedure should be followed:

1. Make sure that all slack-cable switches are operating properly.
2. Check all cables and loads for possible foreign attachments or fouling.
3. Have an observer stationed in the hoist house with direct communication with the operator to scrutinize each hoist and cable as they are tested for overhaul freedom.
4. Momentarily run the hoist in the No. 2 speed position for lowering. If no abnormal slack condition is observed as the cable is played off the drum, proceed with caution to the higher speeds as necessary. If slack remains and the cable is limp, proceed to step 5.
5. Momentarily run the hoist in the No. 1 speed for hoisting to remove the slack from previous operation; then repeat a second time to exert a slight force on the floating block. (It may be necessary to use the slack-bar override for this operation, which is permissible if an assistant is observing the lay of the cable on the drum.)
6. If all parts of the reeved cable move, then repeat step 4.
7. If any part of the reeved cable does not move, the floating block will rise slightly, showing slack in the remaining portions of the reeved cable. If there is ice on the cables, move the cables a slight amount to try to break the ice loose and permit free movement of the cable. If the cable does not move freely, cease operation until thawing occurs. With light loads (under approximately 10 tons),

a 10-in displacement sag may be tolerated while trying to loosen the sheaves.

If a slack condition causes a cable to ride out of its groove, the Senior Operator should be notified. If the cause of the slack condition has been removed or can be overcome by operating carefully, the Senior Operator should proceed as follows. While maintaining direct communication with an assistant in position to observe the hoist drum, the override button may be used with due caution to run the misaligned cable off the drum. If the runoff becomes abnormal, the assistant will immediately inform the Senior Operator, who will stop the hoist drive motor and reevaluate the situation.

6.6.4 Slack-Bar Override in Emergency

The normal procedure for reeling cable from the hoist drum when the slack-bar protection system has been actuated is to have an assistant in the hoist house observe that the unreeling proceeds normally and then to use the slack-bar override to permit rotation of the drums. Only in an extreme emergency will the Senior Operator use the slack-bar override to reel off cable (lower a load) without an assistant present in the hoist house. To justify such action, the Senior Operator must be of the opinion that an observer proceeding to or remaining in the hoist house would be exposed to an unacceptable hazard and that there is potentially more danger in leaving the load suspended than in trying to lower it. In making the decision, the Senior Operator will be guided only by safety considerations of personnel and of the facility.

6.6.5 Checking the Slack Cable Protection System and the Altitude Indication Selsyns

The following checkout procedure is intended to provide assurance that the slack-cable protection system will function if the need arises.

A weeky checklist is used to remind the Senior Operator that this checkout is performed each week in which the hoists are to be used.

The TSF day-shift Senior Operator has the responsibility of seeing that the checks are performed.

The checkout is made by either a Senior Operator or an operator and one assistant. The operator is responsible for the completeness of the checks.

6.6.5.1 Preparation

Prior to starting the checkout, the operator will investigate the possibility of limiting conditions, such as those which would have an adverse effect on the experimental program, originate a radiation hazard, or expose sensitive loads to improper weather conditions. (See Appendix A, (Tower Shielding Facility Check Sheets.)

6.6.5.2 Inspection

The operator will complete the following checklist:

1. Each hoist cable is free and clear from last ground sheave to the hoist house cable entrance.
2. The cable travel area between the hoist drum and the east hoist house wall is clear.
3. Each cable drum and drive assembly appears to be normal and is clear of all foreign objects.
4. The cable lay in the drum grooves is regular and even.
5. Each resistor bank area is clear, and no combustible material is stored nearby.
6. The meter on the hoist battery bank charger indicates charge.
7. The battery liquid level is between the marks on each battery.

6.6.5.3 Operational checkout

There are two distinctly different parts of the checkout. The first part may be done unassisted as follows:

1. With key switches at both the pool (local) and ramp (remote) operating stations turned off, proceed to the hoist house and do the following for each hoist:

    a. Announce over the public address system that hoist checks will be in progress and the slack warning bell will be ringing continuously for a short time.
    b. Move top slack bar away from the drum and note that both the left and right indicating light at the top of the control cabinet turn on indicating the switch at each end of the bar was actuated and operated its associated relay.

c. Repeat step 2 for the middle slack bar.
d. Repeat step 2 for the lower slack bar.
e. Note the slack-indicating lights are out and then depress the reset button (upper botton marked STOP) on the north side of the control cabinet.
f. Repeat steps b, c, d, and e for each hoist.
g. If any abnormalities are noted, assign the necessary craft personnel to rectify them. Check out the repairs when they are completed.
h. Proceed to a hoist operating station and depress the slack system reset.

2. The second part of the checkout requires an assistant, but at no time is it necessary to approach any moving part of the hoisting equipment. At either hoist control station, proceed as follows:

a. Confirm that adequate communication exists between the hoist house and the control station and instruct the assistant to remain in constant contact.
b. Confirm that theassistant is at the control cabinet away from the hoist machinery.
c. Turn on hoist.
d. Move handle to hoist slightly; confirm motion by selsyn indication or cable movement.
e. Move handle to lower slightly; confirm motion by selsyn indication or cable movement.
f. Direct the assistant to depress lower K test button on side of cabinet and maintain pressure while the operator tries to raise and lower the hoist. Note that the warning bell, fault light, and hoist operate but there is no hoist motion.
g. Depress slack-system control button at the control station and have the assistant depress the reset on the control cubicle.
h. Repeat steps f and g for each hoist.
i. Move to other operating station and repeat steps f, g, and h while the assistant depresses the upper K test button on each cabinet.
j. Direct the assistant to leave the hoist house and confirm lowering and hoisting of each hoist by operating just enough to note selsyn operation.
k. If feasible, move loads to a calibration position and record the readings on selsyns at the three selsyn receiver positions; compare them with previous readings.

l. Turn off the hoist and announce over the public address system that testing is completed.

m. If any abnormalities are noted, assign the necessary craft personnel to rectify them. Check out the repairs when they are completed.

7. ROUTINE TSR-II OPERATING PROCEDURES

Table of Contents

	Page
7. ROUTINE TSR-II OPERATING PROCEDURES	7-1
7.1 RESPONSIBILITY	7-1
7.2 PROCEDURES	7-1
7.2.1 Preoperational Checkouts	7-2
7.2.2 Startup of Cooling System	7-3
7.2.3 Personnel Safety Precautions	7-4
7.2.3.1 General	7-4
7.2.3.2 Occupancy of remote areas during reactor operation	7-4
7.2.3.3 Operation in Big Beam Shield	7-5
7.2.3.4 In-air operation	7-6
7.2.3.5 In-pool operation	7-6
7.2.4 Reactor Startup	7-7
7.2.5 Establishing Power Level	7-9
7.2.6 Power Calibration	7-10
7.2.7 Scheduled Shutdown	7-10
7.2.8 Unscheduled Shutdown	7-11

7. ROUTINE TSR-II OPERATING PROCEDURES

Basically, the operation of the TSR-II is similar to that of other ORNL water-moderated and -cooled reactors. Major differences are associated with the rather elaborate cooling system required, the mobility of the reactor, and the weather factor introduced by the location of the reactor.

7.1 RESPONSIBILITIES

It is the responsibility of the Senior Operator to ensure that the reactor is operated safely and in accordance with these approved written procedures. Radiation protection requirements are specified in sections 9.6 and 9.7. Significant departure from the written procedures will require prior review and approval by the Supervisor of Reactor Operations, TSF-HPRR areas, and, where required, by the applicable review committee. The Senior Operator may designate an authorized operator to operate the reactor. The Senior Operator may then work in areas of the building other than the control room but must be available to assume overall responsibility for the reactor operation in any unusual or emergency situation. To maintain the reactor in a safe condition under these circumstances, remedial actions will be taken as necessary by the Senior Operator, or the Senior Operator will assign such action to persons who are qualified.

A senior operator will be in the control building whenever the reactor is operated. During reactor operation, the prime responsibility of the Reactor Operator is to be cognizant of the condition of the reactor at all times and to be in a position to take remedial actions as necessary. The operator may do other things or supervise other work in the control room but not to the extent that prime responsibility is not discharged. Leaving the control room is permissible only if operating responsibilities are turned over to another authorized operator. Readings of the reactor instruments should be recorded at least once each hour.

The Supervisor of Reactor Operations, TSF-HPRR areas, will inform the Office of Operational Safety if any of the following occurs: failure to scram, abnormal operation, unusual difficulties with instrumentation, potentially serious operating difficulties, or any violation of the Technical Specifications.

7.2 PROCEDURES

The following procedures cover the initial reactor run of a shift. Many of these steps, such as checking the reactor controls and the cooling system, are to be performed only once each shift and need not be repeated when returning the reactor to power later during the same shift.

7.2.1 Preoperational Checkouts

1. Examine the Reactor Operation Log and daily checklists (see Appendix A) for the previous run to see whether any remedial actions need to be taken before a new run is started. Then fill out a new log sheet while making the preoperational checkouts. Check that the experimental setup corresponds to approval.
2. Obtain a daily weather report if the reactor or other loads are to be hoisted with the facility hoists.
3. Turn on TV cameras and receivers as needed; adjust cameras to bring the reactor into view on the receiver screens.
4. Check the fission chamber channel for indication of source count rate on the log count-rate meter. The count-rate recorder may be checked for indication of source counts before the reactor-on switch is turned on by turning on the switch within the recorder housing. Withdraw the fission chamber and check to see that the count rate drops, which indicates that the channel is functioning normally. Drive the fission chamber to the lower limit, which should result in a counting rate of greater than 2 counts/s and then withdraw the fission chamber until the count rate just exceeds 2 counts/s. Pull out the control handle to place the fission chamber drive in AUTOMATIC unless manual control is to be used.
5. Turn the log N calibrate switch to the various calibrate positions and adjust the proper potentiometer until readings of 0.001 and 100 are observed on the log N recorder scale. If necessary, repeat adjustments until the settings are brought into calibration. Return the selector switch to the OPERATE position.
6. Visually check the four sigma amplifiers. If the level indicator pointers are not at "zero" or if any of the trouble lights on the amplifier panels indicate abnormal, take the necessary corrective action.
7. Turn Big Beam Shield shutter power on and reset controls.

7.2.2 Startup of Cooling System*

1. Visually check the reactor and its cooling system to make sure it is ready for normal use. It should be free from gross water leaks and should be at the desired altitude.
2. Check the annunciators, note any anomalous conditions, and clear indicators by depressing the acknowledge and reset buttons.
3. Turn on the fill pump switch; the yellow lens on the switch should be illuminated. Observe the main inlet pressure gauge. The pressure should rise to approximately 40 psi if the reactor is in the Big Beam Shield.
4. If temperature conditions require, turn the dc-powered circulating pump switch clockwise; the yellow lens on the switch should be illuminated.
5. Set the dc-powered circulating pump flow at the flow recorder. (The bypass valve is normally left closed as indicated by the amber light on valve mimic, which gives maximum flow.)
6. If the water resistivity is less than 500,000 ohms, turn the demineralizer pump switch clockwise; the yellow indicator lens should be illuminated. A vacuum switch will turn this pump off if its intake pressure is low, which may occur if the system base pressure is low or the filters are clogged.
7. Set the main-pump flow adjustment (at the recorder) to give minimum flow. (This reduces the surge when this pump is started.)
8. Set the louver control switch to suit the operating and temperature conditions.
9. Turn the main-pump switch clockwise; the yellow indicator lens on the switch should be illuminated.
10. Adjust the main-pump flow to 800 gpm (This permits some flow through the bypass line.) and observe the reactor pressure-drop indicator. If this exceeds 32 psi, stop the pumps, determine the cause of the increase, and make proper corrections. The REACTOR WATER FLOW annunciator should clear at the indicated point. The pump must be operated at or above 800 gpm for 3 min to obtain operation PERMIT.
11. On the Reactor Operation Log sheet and the Summary of Systems Recordings, record the readings indicated for the water cooling system.
12. Turn on the heat exchanger fan motor(s) if high power operation is planned and reduction of temperature of the reactor cooling water

---

*If the cooling system is operating continuously, items pertaining to starting pumps or clearing annunciators do not apply.

is desired. If temperature requires, do this after power is attained. At low reactor power (below 10 kW), the cooling water temperature will follow the temperature of the air rather than that of the reactor.

14. Turn off the shim pump special operation switch if it has been used for freeze-up protection.

7.2.3 Personnel Safety Precautions

7.2.3.1 General

The security inspector at post 22 will issue TSF head-count badges to all individuals who enter the TSF exclusion area. During periods when the reactor is not operated, the security inspector will issue a head-count badge to any person with an assigned badge and allow the person to enter the area. When an individual who has no assigned badge needs to enter the area, the security inspector will obtain permission from the Reactor Operator before issuing a badge to the individual and allowing entry. In general, personnel working in the TSF area enter the control building or leave the exclusion area when the reactor is to be operated. When necessary, however, personnel may be permitted to work during reactor operation in locations that are inside the outer exclusion fence but are a safe distance from the reactor. Conditions governing occupancy of remote areas during reactor operation are given in the next section. Procedures for accounting for all personnel in the TSF area prior to reactor operation are outlined in the two following sections.

7.2.3.2 Occupancy of remote areas during reactor operation

If a considerable time is required to accomplish work in a remote area inside the outer exclusion fence, the supervisor of the personnel involved may obtain permission from the TSF Supervisor or, in the TSF Supervisor's absence, the on-duty Reactor Operator for the personnel to work inside the exclusion fence during reactor operation. The TSF Supervisor will establish that it is safe to occupy the area utilizing, if necessary, the services of a health physicist. The TSF Supervisor will (1) enumerate the restrictions to the supervisor of the work crew who will inform the work crew, (2) inform the guard captain who will instruct the security inspectors concerning access of personnel to the

remote area, and (3) record in the TSF Log information concerning the proposed work in remote areas and the restrictions involved. The supervisor of the work crew will supply the crew with a radio that operates KIN-294 so that the Reactor Operator can contact the work crew.

If some urgency is involved in doing work in a remote area, the Reactor Operator may, if necessary, issue a radio to a work crew and personally instruct the workmen concerning the restrictions involved in working in the area (access route, work area, restricted area, and necessity of maintaining radio contact). The security inspector will also inform the guard captain of the access of personnel to a remote area and record this information in the TSF Log.

When personnel want to enter the TSF area to work in a remote area, the security inspector on duty will obtain permission from the operator before issuing the badges. Before giving the security inspector permission to issue the badges, record the date, time of entry, area involved, and badge numbers issued. The security inspector will notify the Reactor Operator when the above personnel leave the TSF area. When non-Laboratory personnel are working in a remote area, they must be accompanied by an ORNL employee.

7.2.3.3 Operation in Big Beam Shield

This is the usual mode of operation. When the reactor is to be left in the shield on the ground for an extended time, the float for the Reactor-in-Air warning is removed to give a continuous Reactor-in-Air indication.

1. Prior to checkout for reactor startup, announce over the inside and outside public address system that the reactor is to be operated and what the expected time of the next scheduled shutdown will be and that anyone desiring to leave the area should do so now. Advise personnel of any unusual conditions, restrictions, or barriers. Check that personnel who are not regularly assigned to the TSF are familiar with the personnel safety precautions. If any individuals are not, inform them or direct another TSF staff member to inform them concerning the potential radiation hazard outside the control building, the badge head count procedure, and the door interlock system.
2. Set up any auxiliary barriers on access roads as necessary.

3. Obtain from the security inspector at post 22 a list of badge numbers of persons in the TSF area and confirm with the security inspector the number of badges issued.
4. Direct the security inspector to close the gate and to turn on the switch to activate the gate alarm.
5. Note on the Reactor Operator Log Sheet the time that the security inspector clears the ACCESS GATE OPEN annunciator.
6. Close the gates in the 600-ft fence.
7. If anyone is working in a remote area inside the exclusion fence contact them by radio and confirm that personnel with the specified badge numbers are working in the specified location. Inform them that the reactor is to be operated.
8. Announce over the inside and outside public address system that the reactor is to be operated and that all personnel are to come inside Control Building 7702 and remain there until further notice.
9. Turn the reactor-on key switch to RESET and then to ON position; an amber light should be illuminated, indicating that the shim pump is operating, and the 3-min warning horn should sound.
10. Announce over the inside public address system that a badge roll call is to be made. Individuals will confirm their presence by repeating their badge numbers when called and may confirm the presence of others within view at their request by calling out their badge numbers. When the check is complete, request anyone whose badge number was not called to respond. If there is any discrepancy in the badge check, it must be resolved before proceeding. If the check is satisfactory, continue startup.

7.2.3.4 In-air operation

This mode of operation is not in routine use. If it is to be used, the reactor cooling system hoses, etc. must be assembled and the operability of the systems checked. Checkout for personnel is the same as in the previous section.

7.2.3.5 In-pool operation

This mode of operation is not in routine use. If it is to be used, equipment in the reactor handling pool must be changed, and the reactor-in-air float alarm must be reactivated and its operation checked. When it is used, proceed with the following steps.

1. See that there are no personnel within a 40-ft radius around the pool.
2. Put up 40-ft radius barrier with radiation hazard signs around the pool and close the gate on the road leading to reactor area.
3. Instruct the security inspector to restrict entry of other personnel to the area to those granted permission by the Reactor Operator.
4. Announce over the inside and outside public address system that the reactor is to be operated in the handling pool.
5. To ensure that all personnel are informed, make a badge check as in section 7.2.3.3, item 10, for In-Air Operation. Also check that personnel who are not regularly assigned to the TSF are familiar with the personnel safety precautions. If any individuals are not, inform them or direct another TSF staff member to inform them concerning the potential radiation hazard outside the control building, the badge head-count procedure, and the door interlock system.
6. If low-flow mode of operation is to be used, see section 4.3.

7.2.4 Reactor Startup

1. Turn the reactor-on key switch to RESET and then to ON position (an amber lens should be illuminated indicating that the shim pump is operating) and open the Big Beam Shield shutter.
2. During the 3-min waiting period following the above action, open the Big Beam Shield shutter; record the shim pump discharge pressure and the shim header pressure; observe the individual clutch pressures (they should be zero); and record expected control plate positions.
3. When the 3-min delay period is ended, rotate the scram reset button to left and right and observe the jump in clutch pressure and flow readings. Push hot-shot buttons on the magnet amplifiers if necessary.
4. Clear the annunciator board by pushing annunciator acknowledge and annunciator reset buttons; both the colored and the white annunciator lights should go out. If any annunciators remain on, the Senior Operator will decide whether corrective action must be taken or, if an explanation is available, whether an explanation noted on the log sheet will be sufficient.
5. Record magnet current.
6. Withdraw the shim safety plates 0.3 in and record the clutch pressure and water flow rate for each shim-safety plate control mechanism.

7. If the shim pump output pressure needs to be reset at this time, shut down and make necessary adjustments in the pump house. Restart from item 1.
8. Turn the rad scram handle to demonstrate that the manual scram is working properly. Verify the scram action by noting that all four magnet currents go to zero; the four clutch lights go out; four seat switch lights come on; and the four clutch flow rates drop sharply.
9. Turn the scram reset button to left and right; if necessary, depress the hot-shot buttons; drive the shim rod to insert limit; and then announce over the public address system that the reactor is being taken critical.
10. Check the operation of the regulating-plate drive. Drive the regulating plate to its withdrawn limit or turn on the servo system and let it drive plate to the withdraw limit which will cause annunciator XA1502, REGULATING ROD AT UPPER LIMIT, to alarm. (The operator may turn off the servo by the pushing servo-off button and setting the regulating rod at 1.0-in position.)
11. Set the picoammeter selector switch to the most sensitive range and confirm that the demand helipot* of the servo system amplifier is providing the desired scale reading on the demand meter.
12. Withdraw the shim plates while observing the fission chamber's count-rate meter period recorder and the count-rate meter level recorder. Also scan the log N period meter and the shim-plate position indicator. When the count-rate-meter period recorder begins to indicate a steady positive period, stop shim plate withdrawal. In any case, never withdraw the shim plates beyond the position where steady positive periods were previously obtained without a definite recorded explanation. Adjust the shim plate position as necessary to maintain a reasonable period as observed on the count-rate-meter period recorder until the log N period recorder begins to show a positive period and the log N level recorder begins to indicate. The log N level recorder should be on scale before the count-rate level exceeds 6×10^4 counts/s if the startup period is longer than 30 s. The fission chamber will be withdrawn automatically when its counting rate has reached 6×10^4 counts/s if automatic mode of operation was selected.

---

*The helipot setting is preestablished and is rarely changed.

7.2.5 Establishing Power Level

The picoammeter recorder should indicate a power level shortly after the log N level recorder indicates power. When it is evident, from increasing picoammeter indications, that this system is operating properly, the picoammeter range selector may be turned to the setting corresponding to the desired power level or changed stepwise to follow the power increase. When the desired power level is reached, the servo system will begin driving the regulating rod to its insert limit if the operator has chosen to start up with the servo on. The power level called for on the servo system demand has now been reached. (If the operator starts the reactor with the servo off, the power should be leveled off with the shim plates and, if desired, the servo turned on by depressing the servo on button.) During operation, the regulating plate should be maintained between 0.9 and 1.1 in by adjusting the shim plate position. If needed and not done in 7.2.2, open louvers, turn on fan motors, and set fan pitch. Control the system temperature by adjusting the fan pitch and operating one or two cooling fans.

If a change in power level is required during operation, it may be accomplished manually after removing servo control or, for power increases, the picoammeter range may be switched to the desired level with the servo remaining on. The regulating plate will then go to the upper limit of its travel, and an annunciator will signal when this limit is reached. When the requested power level is reached, the regulating plate will be driven down toward the critical position. "Trimming" by adjusting the shim plate position to reposition the regulating plate at 1 in. is often required. Provided that the change in power level cannot be accomplished by means of the regulating plate alone in the time desired, the shim plates should be moved in the required direction with the choice of method left to the discretion of the operator.

After a desired power level is reached, the following information should be recorded:

1. On the Reactor Operation Log sheet: the time of day, the power level, and other information requested by the column headings on the log sheet.
2. On the recorder charts: the time, the date, and run number for the initial run and run letter for subsequent operation.
3. On the picoammeter recorder charts: the picoammeter selector switch setting and the demand setting in addition to the items listed above.

7.2.6 Power Calibration

The power of the reactor is routinely established with RANGE SWITCH and the DEMAND HELIPOT on the picoammeter channel. The power level is checked with a heat-power balance (cooling water flow rate - delta temperature measurement) whenever the reactor power level exceeds 500 kW and an equilibrium condition is established. This equilibrium condition depends upon reactor power, cooling water temperature, air temperature, wind velocity, shield temperature, and time at power level.

To determine the reactor power after equilibrium conditions are established, record the reactor coolant flow rate from the recorder connected to the Dahl flow meter in the pump house. Record the measurement of the temperature rise readings. Calculate the power as follows:

Power (kW) = 0.1466 X temp rise (°F) X flow rate (gpm)

Record the data on the log sheet. If the power level so determined exceeds 1,000 kW, reduce the power level and contact the TSF Supervisor.

7.2.7 Scheduled Shutdown

For a routine scheduled shutdown:

1. Remove servo control.
2. Shut down the reactor by driving the shim and regulating plates to the insert limits, by actuating the manual scram, by using the "Jordan button" on one of the sigma amplifiers, or by using one of the other scrams to test these scram circuits. If a scram check is made, record the circuit tested on the Reactor Operation Log Sheet and run the plate drives to the insert limits.
3. Turn the picoammeter scale selector to a high current range to reduce vulnerability to noise bursts; leave the fission chamber position control in the automatic mode.
4. After the heat exchanger outlet temperature has dropped to the desired level, turn off the heat exchanger fan(s).
5. Shut off the main pump. Operate the fill and pressure pump and the dc-powered circulating pump with its bypass valve closed as necessary for temperature conditions.
6. Turn the reactor-on key switch to the OFF position, which will close the heat exchanger louvers and shut off the shim pump (Turn shim pump special operate switch to ON as needed for freeze-up protection.), the water system recorders, and the nuclear instrument recorders if

their internal switches are not in the ON position. Turn off the internal switches unless information is needed. Note that LOUVERS NOT OPEN annunciates. In cold weather, refer to chapter 5 for instructions about pump operation.

7. Close the Big Beam Shield shutter. When the radiation levels outside the control room have decayed sufficiently, announce that personnel may proceed out of the building and then turn off power to the Big Beam Shield shutter drive.
8. On the last run for the day, check the items listed on the TSF End-of-Shift Checklist.
9. Notify the security inspector that the reactor is shutdown and have the inspector turn off Access Restricted switch.

7.2.8 Unscheduled Shutdown

Unscheduled shutdowns consist of three types:

1. Scrams - caused by action of the safety system in response to actual parameter out of allowable range.
2. Plate release - caused by a plate disengaging when the parameters are normal and there is no apparent fault in the electronics.
3. Instrument scrams - caused by safety system action due to a fault (temporary or lasting) in electronics, electrical equipment, or line voltage.

The operator will log the unscheduled shutdown and notify the Senior Operator.

The Senior Operator will determine the cause of the shutdown and take the necessary corrective action and prepare any required reports. If the cause of the shutdown is not known but it has been determined that the reactor system is functioning correctly (particularly the manual scrams and level scrams), the Senior Operator may instruct the operator to resume reactor operation. If the unscheduled shutdown recurs, however, routine operation will be suspended until the cause is determined and corrected.

8. TSF EMERGENCY PROCEDURES

Table of Contents

	Page
8. TSF EMERGENCY PROCEDURES	8-1
8.1 COMMUNICATIONS	8-1
8.1.1 Telephone System	8-1
8.1.2 Radio - Transmitter and Receiver	8-1
8.1.3 Public Address System	8-2
8.2 EMERGENCY EQUIPMENT	8-2
8.3 NONNUCLEAR ACCIDENTS	8-2
8.3.1 Fires	8-3
8.3.1.1 Fire in reactor control building	8-3
8.3.1.2 Alkali metal fires	8-4
8.3.1.3 Other fires	8-5
8.3.2 Nonfire Accidents	8-6
8.3.2.1 Personal injury	8-6
8.3.2.2 Damage to buildings or equipment	8-7
8.4 ACCIDENTS INVOLVING POTENTIAL RADIATION OR CRITICALITY HAZARDS	8-8
8.4.1 Jamming Reactor Shutdown Devices During Operation	8-8
8.4.2 Reactor Handling Device Fails to Operate	8-8
8.4.3 Reactor is Damaged	8-9
8.5 NUCLEAR ACCIDENTS	8-9

8. TSF EMERGENCY PROCEDURES

Emergencies involving the TSR-II and associated equipment at the TSF are considered to fall into the categories of nonnuclear accidents, accidents resulting in potential radiation or criticality hazards, and nuclear accidents. However, since all situations that might create one of these emergencies cannot, obviously, be predicted, specific procedures cannot be included here. Therefore, the procedures given here for the most part specify the persons to be notifed, the steps to be taken to protect personnel, and the things that can be done to prevent the situation from becoming more serious. Additional precautions that might be called for in a particular situation must result from the Senior Operator's knowledge and judgment.

The TSF Senior Operator will have the responsibility for supervising all activities that are necessary in connection with the emergency. The Senior Operator will take whatever immediate action may be necessary to minimize or eliminate any criticality hazards and to safeguard personnel in accordance with established Laboratory procedures.

In addition to the emergency procedures, the safety equipment and means of communication which may be needed in any emergency are listed in this section.

8.1 COMMUNICATIONS

8.1.1 Telephone System

There are three commercial telephone lines to the TSF and one closed line for direct contact with the guard post at the exclusion fence. The guard post may also be contacted via guard headquarters on any of the three commercial lines. When power to the building is lost, the phone system remains operative.

8.1.2 Radio - Transmitter and Receiver

The fixed radio transmitter on net KIN-294 is operated on 115 V ac power from the normal Laboratory grid; if this supply is lost, an alternator which is powered by the main 120-V battery bank is automatically switched on to supply power. A portable battery-operated transmitter-receiver is also available for the same net.

8.1.3 Public Address System

The public address system consists of the inside public address system, which reaches all points in the control room, the ramp area, and the pump house; the outside public address system, which reaches the hoist house and the area around the towers; an auxiliary public address system with a portable speaker-microphone which permits direct two-way communication between the control console and a selected point near the reactor handling pool and between the control console and the reactor turret. These systems are normally operated on 115-V ac power from the normal Laboratory grid; but if this supply is lost, they are operated with power from the same alternator which powers the radio transmitter and receiver.

8.2 EMERGENCY EQUIPMENT

In the passageway between the underground buildings, there are two sealed lockers marked for EMERGENCY USE ONLY which contain emergency supplies and gas masks for all personnel in the building. The masks are protective against most hazards that are expected at the TSF, but not against carbon monoxide, which could be expected in many fires. A list of material is posted at the locker, and the cabinet is checked weekly. The following items are also located in the same vicinity:

1. A stretcher
2. Two portable radiation detectors (cutie pie)
3. A GM survey meter
4. A portable high-radiation-level survey meter (10 to 1,000 rads/min)
5. A battery-operated emergency light
6. Extra clothing including leather hoods, jackets, gloves, and aprons

8.3 NONNUCLEAR ACCIDENTS

Nonnuclear accidents may be conveniently classified as fires or non-fire accidents.

8.3.1 Fires

The basic safety principles regarding fires shall be strictly followed*. Preserving life and preventing personal injury shall take firm precedence over the saving of buildings or equipment.

8.3.1.1 Fire in reactor control building

If a fire is detected in the reactor control building, the following procedure will be executed:

1. The TSF Senior Operator will be notified.
2. The Senior Operator will direct that the following be done:

    a. Shut down the reactor immediately.
    b. Announce over the TSF public address system that there is a fire; describe its location and degree of severity.
    c. Issue instructions as to whether personnel should evacuate the building** (describing a safe route), or report to a safe room, after which an immediate roll call shall be taken to ensure that all persons are accounted for***.
    d. Call the Emergency Control Center (911) or pull the lever on the fire alarm box at the north entrance****.

---

*ORNL stresses fire safety, and TSF personnel attend training films and participate in firefighting drills.

**It should be noted that if the reactor is bare and has been operating at high power, it continues to emit both neutron and gamma rays for several minutes after shutdown. Thus, immediate evacuation of the underground control room by the nearest exit cannot be recommended as the automatically correct response to every fire alarm.

***Numbered badges issued by the local security inspector to all persons entering the TSF area will facilitate this roll call.

****A phone call to the Emergency Control Center is automatically recorded and is received simultaneously by the Fire and Guard Departments, Medical, Applied Health Physics, and Laboratory Shift Supervisor. Thus, the emergency phone call can quickly convey more information to more people than is possible by the fire alarm box which merely announces the location of the alarm box which has been tripped.

e. Notify the TSF area security inspector and instruct the inspector as needed.
f. Open the gates in the 600-ft-radius fence.
g. Arrange to meet the firemen and lead them to the fire.
h. Notify the Supervisor of Reactor Operations, TSF-HPRR areas, the Engineering Physics and Mathematics Division Director, and the Operations Division Director as soon as practical.

8.3.1.2 Alkali metal fires

Alkali metal fires may occur at the sodium shield tanks or where any other quantities of alkali metal are stored.

If an alkali metal fire is detected, the following procedure will be executed:

1. The TSF Senior Operator will be notified.
2. The Senior Operator will direct that the following be done:

   a. Shut down the reactor.
   b. Announce over the public address system that there is an alkali metal fire and give its location and degree of severity.
   c. Issue instructions to personnel and have a roll call if necessary.
   d. Call the Emergency Control Center (911) or operate the fire alarm box at the north entrance.
   e. Notify the TSF area security inspector and instruct the inspector as needed.
   f. Open the gates in the 600-ft-radius fence.
   g. Arrange to meet the firemen and remind tham that it is an alkali metal fire.
   h. If the reactor is suspended, consider moving the reactor to a safer (elevated) location and/or killing all electrical power to the reactor.
   i. Notify the Supervisor of Reactor Operations, TSF-HPRR areas; the Engineering Physics and Mathematics Division Director; and the Operations Division Director as soon as it is practical to do so.

3. The Senior Operator will keep the following factors in mind when issuing instructions to TSF personnel and outside firefighters.

a. The extent of the hazard must be ascertained before personnel are permitted to approach the fire or even leave the shelter of the reactor control building*.
b. Avoid the use of water and other ordinary fire extinguisher materials.
c. If the fire is small and approachable, laying dry graphite powder on the burning alkali may help smother the fire and cool it down. Fifty-five-gal drums of dry powdered graphite and long-handled shovels are available for this purpose. Persons approaching the fire should be suitably garbed in fire safety clothes**.
d. The cleanup following an alkali metal fire should proceed as soon as possible***. The area should not be left unattended before cleanup because residues may rekindle into new fires. The final step in the cleanup procedure should be a hosing of the area to react any metal which might otherwise react with rainwater later on.

8.3.1.3 Other fires

If an ordinary fire is detected outside the control building, the following procedure will be executed:

1. The Senior Operator will be notified.
2. The Senior Operator will direct that the following be done:

   a. Shut down the reactor.
   b. Announce over the public address system that there is a fire and describe its location and its degree of severity.
   c. Issue instructions to local technicians and others regarding what action they should take.

---

*Air entering the ventilating system of the control building passes through a series of special filters capable of removing combustion products from an alkali metal fire.

**Safety clothes for this purpose include chrome-leather coats, jackets, aprons, gauntlet gloves, and safety helmets equipped with thick plastic face shields and leather capes.

***Equipment on hand which may be useful in such a cleanup includes stainless steel trays and beakers, tweezers, putty knives, spatulas, scoops, mineral oil, and various brushes.

d. Call the emergency Control Center (911) or trip the fire alarm box.
e. Notify the TSF area security inspector and instruct the inspector as needed.
f. Open the gates in the 600-ft radius fence.
g. Prepare to meet the firemen, guide them to the fire, and advise them of the places in the vicinity where wetting down with water should be avoided because of the presence of alkali metals or other sensitive materials or equipment*.
h. Consider the advisability of moving the reactor to a safer location.
i. Notify the Supervisor of Reactor Operations, TSF-HPRR areas, the Engineering Physics and Mathematics Division Director, and the Operations Division Director as soon as practical.

8.3.2 Nonfire Accidents

8.3.2.1 Personal injury

A wide variety of indoor and outdoor work is performed at the TSF; therefore, the range of hazards is correspondingly large**. The TSF is equipped with stretchers and filter-type gas masks. In case of personal injury, the following procedure will be executed:

1. The TSF Senior Operator will be notified.
2. The Senior Operator will direct that the following be done:

   a. Shut down the reactor.

---

*Wetting down areas adjacent to a bad fire is a common firefighting practice to prevent the fire from spreading. In a scientific laboratory, such practice may, in certain cases, lead to higher losses due to water damage than might have resulted from fire damage. The presence of alkali metals near an ordinary fire may influence the choice of firefighting methods.

**Typical hazards include those associated with working in high places, operation of heavy equipment, shop and hand tools, electricity, ice in winter (slippery ice under foot and heavy ice falling from above), and even bee stings and black widow spider bites in the summer.

b. Issue instructions to local personnel on how to care for the victim.
c. Call the Emergency Control Center (911) and describe briefly what happened and the condition of the victim. Convey any instructions from Medical to the Senior Operator.
d. Notify the TSF area security inspector and instruct the inspector as needed.
e. Open the gates in the 600-ft-radius fence.
f. Prepare to meet the ambulance or emergency team.
g. Notify the Supervisor of Reactor Operations, TSF-HPRR areas, The Engineering Physics and Mathematics Division Director, and the Operations Division Director as soon as it is practical to do so.

8.3.2.2 Damage to buildings or equipment

Damage may occur to buildings or equipment as the result of high winds, lightning, earthquake*, snow loads, or other causes. If such an event occurs, the following procedure will be executed:

1. The TSF Senior Operator will be notified.
2. The Senior Operator will direct that the following be done:

   a. Shut down the reactor.
   b. Announce over the TSF public address system that damage has occurred; warn personnel of any potential hazards; and instruct them regarding what action should be taken.
   c. Shut off the electricity to the damaged area as a precaution if deemed advisable.
   d. Call the Emergency Control Center (911) if there is danger of fire breaking out.
   e. Call the Supervisor of Reactor Operations, TSF-HPRR areas, and inform the Supervisor of the situation and ask for instructions.
   f. Notify the TSF area security inspector and open the gates in the 600-ft radius fence if people are expected to enter or leave the area.

---

*The incidence of earthquakes in this region is very low.

8.4 ACCIDENTS INVOLVING POTENTIAL RADIATION OR CRITICALITY HAZARDS

8.4.1 Jamming Reactor Shutdown Devices During Operation

In the highly unlikely event that the operating reactor cannot be shut down, the operator will proceed as follows:

1. Operate the scram handle.
2. Manually drive the individual control elements in the direction of shutdown.
3. Turn off the startup key switch and turn on individual instrument recorders.
4. Make sure that the TSR-II shim pump is off.
5. Warn TSF personnel to remain in the underground control room.
6. Notify the Supervisor of Reactor Operations, TSF-HPRR areas, of the situation and ask for instructions.
7. Notify the TSF area security inspector and give the inspector instructions.
8. Call the ORNL Shift Supervisor and the Health Physics Department Head and inform them of the situation.

8.4.2 Reactor Handling Device Fails to Operate

If the TSR-II hoists will not lower the reactor to a shielded location in the usual manner, electrical power failure is likely the cause and an alternate means of movement is available. Before moving the reactor by the special method, however, verification must be made that the reactor is mechanically free to move*.

The TSR-II reactor may be lowered without normal electrical power by employing a special set of hoist controls which use auxiliary battery power to release the hoist brakes. The lowering process is very slow, but it can be performed from the shielded hoist station.

---

*An obvious open circuit to a motor may have been caused by a not-so-obvious mechanical obstruction which still exists.

8.4.3 Reactor Is Damaged

The reactor may be damaged by falling to the ground or by heavy objects falling upon it*.

If the reactor is damaged in such manner, the following procedure will be executed:

1. The TSF Senior Operator will be notified.
2. The Senior Operator will direct that the following be done:

   a. Shut down the reactor immediately.
   b. Announce over the TSF public address system briefly what has happened and warn personnel to stay in the underground control building.
   c. Examine the damaged reactor with the TV cameras.
   d. From the control room, read the radiation levels at the fixed location monitoring stations**.
   e. If the radiation level is very low and of constant value, typical of a shutdown reactor, the reactor may be approached with suitable portable instruments for closer inspection. Nothing at the reactor will be moved.
   f. Rope off the area and erect radiation warning signs.
   g. Notify the Supervisor of Reactor Operations, TSF-HPRR areas, the Engineering Physics and Mathematics Division Director, and the Operations Division Director.

8.5 NUCLEAR ACCIDENTS

A nuclear accident presupposes the release of activated material and/or fission products.

If such an accident occurs, the following procedure will be executed:

1. The TSF Senior Operator will be notified.
2. The Senior Operator will direct that the following be done:

   a. Shut down the reactor.

---

*The TSR-II core is well-protected from external danage since it is deeply hidden inside layers of water and metal.

**Radiation monitoring devices are located at the reactor handling pool, both hoist stations, and at entrances to the control building.

b. Warn TSF personnel to remain in the underground building.
c. Appraise the situation by noting the radiation monitor levels and the reactor instrumentation readings of power level, control element position, temperature, pressure and, flow (where applicable).
d. Inspect the reactor with closed-circuit television.
e. Notify the Supervisor of Reactor Operations, TSF-HPRR areas, inform the Supervisor of the situation, and ask for instructions.
f. Notify the TSF area security inspector and give the inspector instructions.
g. Call the Emergency Control Center (911) to alert the Laboratory Shift Supervisor and the Health Physics Department Head if the radiation or contamination hazards will not permit personnel to evacuate the TSF control building safely or if the hazard extends beyond the TSF control area.

3. The TSF Supervisor, working with Health Physics personnel, will evaluate the existing radiation, contamination, and criticality hazards. The TSF Supervisor will formulate and supervise site survey plans and cleanup procedures with ORNL emergency groups functioning as required.

9. SUMMARY OF SURVEILLANCE REQUIREMENTS FROM THE TSR-II TECHNICAL SPECIFICATIONS

Table of Contents

		Page
9.	SUMMARY OF SURVEILLANCE REQUIREMENTS FROM THE TSR-II TECHNICAL SPECIFICATIONS	9-1
9.1	REACTIVITY	9-1
9.2	REACTOR CONTROL AND SAFETY SYSTEMS	9-1
9.3	REACTOR COOLING SYSTEM	9-2
9.4	SHIM-SAFETY PLATE RESPONSE TIMES	9-3
9.5	HOIST SLACK-LINE PROTECTION DEVICES	9-3
9.6	INSTRUMENTATION FOR PERSONNEL RADIATION PROTECTION	9-3
9.7	PERSONNEL RADIATION PROTECTION SYSTEM	9-4
9.8	LIMITATIONS ON EXPERIMENTS	9-4
9.9	MINIMUM STAFF REQUIREMENTS	9-5
9.10	ACTION TO BE TAKEN IN THE EVENT A SAFETY LIMIT IS EXCEEDED	9-5
9.11	ACTION TO BE TAKEN IN THE EVENT OF AN ABNORMAL OCCURRENCE	9-6
9.12	ADDITIONAL REPORTING REQUIREMENTS	9-8
9.13	REVIEW REQUIREMENTS	9-8
9.13.1	Engineering Physics and Mathematics Division Safety Review Committee (EP&MDSRC)	9-8
9.13.2	Reactor Operations Review Committee (RORC)	9-8
9.13.3	Criticality Review Committee (CRC)	9-8
9.14	LIMITATIONS ON REACTOR OPERATION	9-8
9.15	HOIST OPERATION REQUIREMENTS	9-9
9.16	TOWER INTEGRITY	9-9

9. SUMMARY OF SURVEILLANCE REQUIREMENTS FROM THE TSR-II TECHNICAL SPECIFICATIONS

The surveillance requirements of the Tower Shielding Reactor II (TSR-II) are summarized here for the convenience of the operators. Also included are administrative requirements not stated elsewhere in the Tower Shielding Operating Manual that require operator action. Definitions and the actual technical specifications are added where they contribute to understanding prescribed duties. Operators are reminded, however, that they must be familiar with the complete technical specifications.

9.1 REACTIVITY

1. The reactivity worth of the regulating plate will be measured annually and also whenever a new fuel loading or a control mechanism housing is installed. Its total worth must be less than 0.5% $\Delta k/k$.
2. The reactivity worth of new shim-safety plates will be determined by comparing, under similar conditions with the reactor at delayed critical, the position of the new shim-safety plates with that of the plates which have been replaced. The reactivity worth of the shim-safety plates will be determined if the above operating positions do not agree or if the regulating plate calibration (see above) does not agree with previous calibrations. The clean cold excess will be no more than 1.6% $\Delta k/k$, and the shutdown margin will be no less than 1.6% $\Delta k/k$.

9.2 REACTOR CONTROL AND SAFETY SYSTEMS

1. A channel test of the reactor safety system channels and auxiliary power supply will be performed after maintenance and weekly when the reactor is in operation.
2. A channel check of each of the reactor safety system channels listed in Table 9.1 will be performed daily when the reactor is in operation.

Table 9.1. Minimum instrumentation required for reactor startup and operation in normal and low-flow modes

Description	Number required	
	At startup	Power operation
Safety or protective channels		
Power level safety channels	2	2
Reactor cooling water flow channel	1	1
Core pressure drop channel[a]	1	1
Core temperature channel[a]	1	1
Heat exchanger outlet or reactor inlet water temperature channel[a]	1	1
Measuring channels		
Neutron counting-rate channel[b]	1	1
Log N power or picoammeter channel	1	1
Water activity monitor	1	1

[a]Channel not required for low-flow mode of operation (See section 4.3).
[b]This channel has an auxiliary power supply that operates during a power outage.

3. A channel calibration of the reactor safety system channels will be performed semiannually and after maintenance on the reactor safety system channels that could affect the calibration of the reactor safety system channels.
4. The power measuring channels will be calibrated against a primary system heat balance whenever the reactor is operated at 500 kW or above if the operation is sufficiently long to obtain temperature equilibrium and, in any case, at least semiannually and after maintenance on the power measuring channels that could affect calibration of the power of the measuring channels.

9.3 REACTOR COOLING SYSTEM

To ensure that the base pressure in the reactor cooling system will not exceed 125 psig, the pressure relief valves in the system will be tested annually and after maintenance on the pressure relief valves that could affect the pressure setting of the valves.

To ensure that the pressure drop across the core will not exceed 35 psi, it will be checked daily during operation.

The reactor pressure vessel will be nondestructively examined for cracks and reduction in wall thickness in accordance with a repeating 10-year inspection plan which complies with the intent of section XI of the ASME Boiler and Pressure Code, "In-Service Inspection."

9.4 SHIM-SAFETY PLATE RESPONSE TIMES

To ensure that the release time for any of the four shim-safety plates will not exceed 70 ms and the total insertion time (including release time) of any of the four shim-safety plates from its normal operation position to its normal shutdown position will not exceed 200 ms, the following measurements will be made.

The release time and total travel time of each shim-safety plate will be measured when a new control mechanism housing is installed, when maintenance is performed on the system, and routinely semiannually.

9.5 HOIST SLACK-LINE PROTECTION DEVICES

To ensure that there will be at least two independent sensors to indicate if a cable rises in its groove and that each sensor will actuate two independent channels, each of which will stop the lowering action of the hoist, the following will be done:

1. Prior to use of the hoists, the operation of the slack-line protection devices on each hoist will be checked after maintenance, alterations, or shutdown periods exceeding one month.
2. When the hoists are used routinely, operation of each sensor in the slack-line protection systems will be checked weekly.

9.6 INSTRUMENTATION FOR PERSONNEL RADIATION PROTECTION

To ensure that the reactor operation will be terminated if the radiation level seen by radiation monitors at any two of the three building exits exceeds 23 mR/h or if the monitor at one building exit is out of service and the radiation level seen by a monitor at another exit exceeds 23 mR/h, the operation of the radiation monitoring channels and their associated alarm setting will be checked weekly during periods of reactor operation. The radiation monitoring equipment will be

calibrated annually and after maintenance on the radiation monitoring equipment that could affect the calibration of the equipment.

9.7 PERSONNEL RADIATION PROTECTION SYSTEM

The system includes the following channels:

1. Monitors at:

    a. Control building north door
    b. Control building ramp gate
    c. Control building escape hatch
    d. West gate in the 600-ft-radius fence
    e. North gate in the 600-ft-radius fence

2. Remote manual scram at pool hoist station
3. Remote manual scram at ramp hoist station

The operation of each channel will be checked weekly during periods when the reactor is in operation and after maintenance on the radiation monitoring equipment that could affect the operation of the equipment to ensure that the channels are operable.

9.8 LIMITATIONS ON EXPERIMENTS

The limitations are:

1. The reactivity worth of the experiments will be limited to values that can be achieved within the core reactivity limits specified in section 9.1, and a failure or malfunction will add no more than 1% reactivity to the reactor.
2. Experiments will be performed outside the pressure vessel. (This does not pertain to the determination of the reactivity worth of shields.)
3. Any hazardous materials used in an experimental configuration will be suitably contained, and the region between the reactor vessel and the experimental configuration will be vented to the atmosphere.

To ensure the limitations on experiments are met, the following will be done:

1. Measurements will be performed to determine the reactivity worth of the experiment. The information describing the reactivity worth of the experiment will be recorded in the Operations Logbook.

2. Integrity of containment of hazardous materials will be verified by Quality Department personnel prior to use and periodically while the material is maintained for use in the experimental program.

9.9 MINIMUM STAFF REQUIREMENTS

1. A senior reactor operator and one other TSF staff member will be present in the control building when the reactor is operated.
2. Either a senior reactor operator or a reactor operator will be in a position to take remedial action as necessary during reactor operation.
3. A senior reactor operator and at least two other members of the TSF staff will be present whenever fuel elements, a control mechanism housing, or shields are removed from or inserted into the reactor pressure vessel.

9.10 ACTION TO BE TAKEN IN THE EVENT A SAFETY LIMIT IS EXCEEDED

Table 9.2. Safety limits

Variable	Type of Operation	
	Normal	Low Flow
Total reactor thermal power (P_T)	<3 MW	<50 kW
Reactor cooling water flow rate (Q)	>400 gpm	>25 gpm
The pressure drop of the cooling water flow through the core (ΔP)	>that equivalent to cooling water flow rate of 400 gpm, 6 psi	
Temperature of cooling water at the inlet to the reactor (T_R)	<160°F	<160°F
Temperature of cooling water at the outlet of the heat exchanger (T_H)	<160°F	<160°F
Increase in the cooling water temperature as it passes through the reactor (ΔT)	<50°F	<50°F

In the event a safety limit is exceeded:

1. The reactor will be shut down, and reactor operation will not be resumed until authorized by the DOE.
2. An immediate report will be made to the Laboratory Executive Director and the Office of Operational Safety by the Operations Division Director.
3. A verbal report will be made no later than the next work day to DOE.
4. A written report will be made, which will include an analysis of the the causes and the extent of possible resultant damage, effectiveness of corrective action, and recommendations for measures to prevent or reduce the probability of recurrence. This report will be sent to the Reactor Operations Review Committee and a similar report submitted to DOE when authorization to resume operation of the reactor is sought.

9.11 ACTION TO BE TAKEN IN THE EVENT OF AN ABNORMAL OCCURRENCE

Table 9.3. Limiting safety system settings

Variable	Type of Operation	
	Normal	Low Flow
P_T	<Neutron flux equivalent to 1.6 MW (t)	<Neutron flux equivalent to 16 kW (t)
Q	>450 gpm	>45 gpm
ΔP	<8.5 psi	--
T_R	<140°F	<140°F
T_H	<140°F	<140°F
ΔT	<16°F	<16°F

An abnormal occurrence is defined as any actual safety system setting less conservative than specified in the above table, operation in violation of a technical specification, incidents or conditions which prevented or could have prevented the performance of the intended safety function of an engineered safety feature of the reactor safety system, an uncontrolled or unanticipated release of radioactivity in excess of the concentration described in DOE 5480.1, Attachment XI-I, an uncontrolled on unanticipated change in reactivity, an observed inadequacy in the implementation of either administrative or procedural controls, such that the inadequacy has caused the existence or development of an unsafe condition in connection with the operation of the reactor, or an uncontrolled or unanticipated release of radioactivity. In the event of an abnormal occurrence, the following action will be taken:

1. The TSF-HPRR Operations Supervisor and other appropriate management personnel will be notified and corrective action taken prior to resumption of the operation involved.
2. A written report will be made by the operators that will include an analysis of the cause of the occurrence, efficacy of corrective action, and recommendations for measures to prevent or reduce the probability of recurrence, in accordance with DOE Order 5000.3, "Unusual Occurrence Reporting System."
3. A written report will be submitted to DOE by Management.

9.12 ADDITIONAL REPORTING REQUIREMENTS

1. A report will be made by Management no later than the next work day to the Safety and Environmental Control Division, Contracting Office Technical Representative, DOE, Oak Ridge Operations of the following conditions:

   a. Any release of radioactivity to the environment above the permissible limits specified in DOE Order 5480.1A, Chapter XI
   b. Any violation of a safety limit (see section 9.10)
   c. Any exposures to personnel in controlled or uncontrolled areas that exceed the standards in DOE Order 5480.1A, Chapter XI

2. A report will be made by Management within three work days to DOE-ORO of any violation of the technical specifications.

9.13 REVIEW REQUIREMENTS

9.13.1 Engineering Physics and Mathematics Division Safety Review Committee (EP&MDSRC)

Shielding experiments that involve the TSR-II will be performed after they have been formally approved by EP&MDSRC. EP&MDSRC actions are reported to the Reactor Operations Review Committee.

9.13.2 Reactor Operations Review Committee (RORC)

The RORC maintains the prerogative of reviewing shielding experiments that involve the TSR-II after the committee members receive an approval of the experiment by the EP&MDSRC.

9.13.3 Criticality Review Committee (CRC)

Operations involving the handling, storage, transportation, and disposal of significant quantities of fissile material will be performed in accordance with procedures approved by the CRC.

9.14 LIMITATIONS ON REACTOR OPERATION

The reactor will be operated so that the radiation levels to uncontrolled areas from routine reactor operation or under MCA con-

ditions will always be within acceptable values. To meet this requirement, the following limitations are in effect:

1. The reactor operation will be scheduled so that the radiation dose at the boundary of the uncontrolled area will be kept at a practical minimum; will be within the Radiation Protection Standards, DOE Order 5480.1A, Chapter XI; and will be less than 100 millirems in any seven consecutive days. Dosimeters will be placed at monitoring stations at the boundary of the uncontrolled area to record the accumulated dose.
2. The total operation for any one set of fuel elements in the TSR-II will be limited to 3000 MW h.
3. Integrated operation of the reactor during a five-day period at power levels above 100 kW will be limited to 75 MWh. If the limit of 75 MWh is reached in a five-day period, the reactor will not be operated above 100 kW for 48 h. If a limit of 72 MWh is reached in a 12-day period, the reactor will not be operated above 100 kW for 24 h.

9.15 HOIST OPERATION REQUIREMENTS

To preclude the possibility of an accident that might result from overloading the hoisting equipment, the hoists will be operated by a certified reactor operator; and the size and positioning of the loads moved with the hoisting equipment will be in conformance with those outlined by the architect-engineer who was responsible for design and erection of the tower structure*. The reactor will not be elevated from a ground position when winds exceed 40 mph and the hoists will not be used to raise the reactor more than 50 ft above the ground unless it has been less than five years since the system has been load checked.

9.16 TOWER INTEGRITY

To ensure that the tower structure, guy cables, and foundations continue to meet design specifications, they will be checked and inspected on a routine basis.

---

*Knappen-Tibbetts-Abbett-McCarthy, Loading Criteria and Analysis for the Tower Shielding Facility, (1953).

The tower checks and inspections include but are not limited to the following:

1. On a yearly basis, the alignment of the towers will be checked, the elevation of the tower bases and guy anchors will be checked, the resistance to ground of lightning protection grounding system will be measured to determine that it has not changed, and the condition of the towers, the tower guys, the tower bases, guy anchor bases, the electrical grounding system, and all connections will be checked visually.
2. On a five-year basis, the tower guys will be checked for internal breakage or wear with eddy-current and magnetic induction measurements.

10. TSR-II MAINTENANCE, CALIBRATION, AND INSPECTION

Table of Contents

	Page
10. TSR-II MAINTENANCE, CALIBRATION, CHECKS AND INSPECTION	10-1
10.1 CALIBRATIONS	10-1
10.1.1 Regulating Plate Calibration	10-1
10.1.2 Shim-Safety Plate Response Times	10-2
10.1.3 Calibration Checks of Picoammeter	10-4
10.2 CHECKS	10-5
10.2.1 Checking Safety Channels	10-5
10.2.2 TSR-II and Personnel Protection Checks	10-7
10.3 INSPECTION	10-10
10.3.1 Daily Inspections	10-10
10.4 MAINTENANCE	10-12
10.4.1 Maintenance Scheduling	10-12
10.4.2 Tag-Out Precautions	10-12
10.4.3 Instrumentation and Controls Maintenance Schedule	10-13
10.4.4 Maintaining Reference Fluid in Variable Base-Pressure Regulator	10-14

10. TSR-II MAINTENANCE, CALIBRATION, CHECKS AND INSPECTION

Routine checks, calibrations, inspections, and maintenance of the TSR-II and its associated equipment are done on a time cycle or operational cycle. The scheduling of work by personnel from Plant and Equipment Division, Instrumentation and Controls Division, and Quality Department is done with computer-generated information. The remaining scheduling is accomplished with a pending file maintained by Operations Division personnel at the TSF.

The pending file at the TSF consists of charts listing the work required and the week in which the work is due. Some of the work scheduled by other groups is also listed on the TSF charts. When any work, including nonroutine work, is done, it is described in the facility logbook and, where appropriate, it is marked on the charts.

10.1 CALIBRATIONS

10.1.1 Regulating Plate Calibration

Calibration of the regulating plate is performed semiannually to measure reactivity worth of the regulating plate as a function of separation distance from the fuel.

The signal from the reactor fisson chamber of the console is fed through a line-driver preamplifier and A-I Amplifier to a log count-rate meter. The output of the pulse height selector in the A-I Amplifier is connected to an electronic counter. Set the instrument to accept counts for 10-s intervals. When taking counts, push the reset at even intervals of time (1/2 or 1 min) and record time and total counts.

Procedure. During the following measurement, maintain the reactor water temperature as constant as possible.

1. With the regulating plate fully inserted, raise the reactor power 2 to 50 W with the shim plates only; using the shim plates, stabilize the reactor power on an infinite period as indicated by the picoammeter or fission chamber.
2. Withdraw the regulating plate 0.3 in. or some convenient increment. Always approach the regulating plate position from the same direction to compensate for system hysteresis. Take sufficient points as noted above so that a good straight line is established on semilog graph paper. Determine the period of time for power to increase a factor of e. Obtain reactivity for e-factor increase from curves.

3. Take the reactor subcritical by inserting the shim plates; do not move the regulating plate.
4. Repeat steps 1, 2, and 3 until the entire length of regulating plate is investigated.
5. Determine and plot the integrated worth of the regulating plate as a function of position and file.

10.1.2 Shim-Safety Plate Response Times

The Senior Operator will be responsible for making the plate release and travel time measurements and will direct instrument personnel to set up the equipment, which, in addition to the normal reactor complement, includes a suitable single sweep oscilloscope, a polaroid camera (loaded with 3000 ASA film), and a drop test box, as follow:

1. Connect the input of the oscilloscope to a Tee in the input of the seat switch amplifier of the plate to be checked.
2. Disconnect the sigma bus lead at the magnet amplifier of the plate to be checked.
3. Connect the magnet amplifier terminal on the drop test box to the sigma bus terminal on the magnet amplifier.
4. Set the voltage on the drop test box to give the correct solenoid current for the shim-safety plate being checked.
5. Connect the external trigger of the oscilloscope to the trigger terminal of the drop test box. Check oscilloscope trigger with the button on the box.
6. Check oscilloscope triggering by depressing the scram button on the drop test box.

Procedure.

1. Start up the reactor in the usual fashion.

2. Measure release time by the following method:

   a. Pick up all shim-safety plates and adjust the position of the shim plate drive so that the seat switch of the plate which is being observed is just about to be actuated (no flow on turbinemeter indicator).

b. Record the insert limit of the shim plate drive and the position of the shim plate before release. (Manually check the plate position at which the seat light comes on and repeat several times before making release time measurement.)
c. Set the oscilloscope and polaroid camera to photograph the pattern on the oscilloscope during release.
d. Scram the plate being observed with the special scram switch on the test box.
e. Develop the photograph of the trace.
f. Record the settings of the oscilloscope, the date, the plate number, the shim header pressure, the plate position, and the release time on the film and on the file card.
g. Proceed to measure the total release and travel time on the same plate.

3. Measure total time (release plus flight time) by the following method:

   a. Take the reactor nearly critical (check previous operating history), and if possible set plates at the same position as in previous tests (0.25, 0.85, 1.00, 1.2, and 1.68 in.).
   b. As before, adjust the oscilloscope and camera, and scram the plate with the special switch on the drop test box.
   c. Develop the photographs and record the information as for the release time (record total time rather than release time).

4. Pick up the plates again and direct an instrument technician to cut off the magnet current to a sufficient number of plates so that the shim plate being observed can be raised to the upper operating limit without the reactor being critical. Record the same information as in 3 above.
5. Repeat all the above for each shim-safety plate.

Restoring the System to Normal Condition

The Senior Operator will instruct the instrument technician to

1. remove the oscilloscope connection from the seat switch amplifier input,

2. disconnect the drop test box from the sigma bus connection of the magnet amplifier,
3. reconnect the magnet amplifier to the sigma bus, and
4. restore magnet currents to the proper values.

The above steps apply to all four shim-safety plates.

10.1.3 Calibration Checks of Picoammeter

To operate the TSR-II at a constant power, a servo amplifier drives the regulating plate so that the current from a compensated ionization chamber which is mounted at a fixed position in the reactor neutron flux remains constant. The absolute power of the reactor must be determined in a heat power measurement to establish the chamber current for a given power. Thereafter the Operator selects the power which is to be maintained by setting the RANGE SWITCH on the picoammeter which can be varied from 1×10^{-1} to 1×10^{-4} amp in steps of 1-2-5 and by setting the DEMAND helipot on the servo amplifier. (Normally the DEMAND helipot on the servo amplifier is not changed between power determinations.) The approximate linear value of the current which will be maintained is displayed on the DEMAND meter of the servo amplifier. Then, when the reactor is placed under the servo control, the servo amplifier requests regulating plate movement as necessary to maintain the chamber current as displayed by the picoammeter recorder and meter at the present value.

The picoammeter is the heart of the power control system and the Operator must be certain that it is operating correctly to ensure that radiation leakage from the reactor for a given power remains the same from run to run. To ensure this, the picoammeter zero is checked daily and two current values are checked weekly. Periodically all range positions on the picoammeter are checked for linearity.

Each day the operator will make linearity and zero checks as follows before operating the reactor and so indicate on the Reactor Operation Log:

1. Push the reactor SERVO OFF button.

2. Turn on the picoammeter recorder.
3. While pressing the picoammeter ZERO CHECK button, observe both the picoammeter recorder indication (fixed scale) and the meter on the picoammeter while changing the picoammeter RANGE SWITCH from 5×10^{-7} through 5×10^{-9}. Adjust the ZERO ADJUST helipot on the picoammeter as necessary to give the minimum deflection on both indicators. (It is possible to erroneously set to zero by observing only the recorder since movement of the needle below zero reading is very slight.)

   CAUTION

   Do not adjust the mechanical zero on the picoammeter; this should be done only by an instrument technician.
4. Each Monday morning the following checks will be made:

   a. Set picoammeter RANGE SWITCH on 100-kW position (5×10^{7}).
   b. Turn on picoammeter recorder.
   c. Disconnect input to picoammeter.
   d. Connect output of 100 kW - 20 kW CURRENT SOURCE BOX to input of picoammeter.
   e. Turn on CURRENT SOURCE BOX and follow instructions written on source box.
   f. Turn 100 kW - 20 kW switch on CURRENT SOURCE BOX to 100 kW and picoammeter RANGE SWITCH to 100 kW. Recorder scale should read 4.
   g. Turn 100 kW - 20 kW switch on CURRENT SOURCE BOX to 20 kW and set picoammeter RANGE SWITCH at 20 kW position. Recorder scale should read 4.05.
   h. If the recorder does not read the proper values in f and g, notify the Instrument Foreman. If readings are correct, proceed.
   i. Disconnect CURRENT SOURCE BOX from input to picoammeter.
   j. Reconnect input lead to picoammeter.

10.2 CHECKS

10.2.1 Checking Safety Channels

In order to confirm the ability of a designated channel to scram the reactor, it must be made sufficiently more sensitive than the others so that there is no doubt during the test as to which signal is controlling

the situation. For the TSR-II, this is best done by moving the ionization chambers in to a more sensitive position. Obviously, it is necessary to record the old positions precisely so each chamber may be returned to its proper position. All chambers must be returned to the proper position after the tests and their correct performance verified.

A TSF Senior Operator will be present when this test is made and will log all changes, even those that presumably were restored to the original condition. An instrument technician will assist in the following conditions:

1. The distance between the lower end of each safety chamber and the bottom of its well will be recorded. This may be recorded as the height of a fixed point on the ionization chamber extension to the top of the chamber well cover.

CAUTION

Do not mark or score the chamber extension as it may cause a leak in the O-ring seal.

2. Loosen the clamp on each chamber extension, lower each chamber to the bottom of its well and retighten the clamp on each chamber extension.
3. Operate the reactor in the normal fashion and level the power at 100 kW, then set the reactor on a period no less then 25 s and allow the power to increase until a sigma amplifier meter on the safety monitor chassis causes a reverse. When the first sigma meter causes a reverse, note the power and reset the trip setting on the meter from 60 to 80%. Adjust the control plate positions until the increase in power is as before the reverse. When the second sigma meter causes a reverse, reset the meter as above. Repeat the action for the third sigma meter.
4. With all sigma amplifier meters on the safety trouble chassis set on 80%, readjust the control plates until the positive period is reestablished and allow the reactor power to increase until a scram is caused by one sigma amplifier or the power approaches 1 MW. If the power exceeds 900 kW, shut down the reactor and check with TSF supervision. Do not proceed unless supervision establishes that the safety shutdown will occur below 1 MW. In no case allow the reactor power to exceed 1 MW. If a sigma amplifier causes the scram, note the power and then disconnect the input from the sigma amplifier preamp to that amplifier.

5. Restart the reactor and repeat step 4 for a second sigma amplifier.
6. Reconnect the input to the first sigma amplifier.
7. When the radiation level at the reactor is sufficiently low, loosen the positioning clamps on the two chambers that caused reactor shutdowns and move the chambers to their original positions and retighten the positioning clamp.
8. Restart the reactor and repeat step 4 for the third number.
9. When the radiation level at the reactor is low enough, loosen the positioning clamp on the chamber that is still inserted, move the chamber to the original position, and tighten the bolt in the positioning clamp.
10. Recheck the chamber positions.
11. Reset the trip setting on the three sigma amplifier meters on the safety trouble monitor to 60%.
12. Operate the reactor in the normal manner and raise the power to a level sufficient to check the operation of the sigma amplifiers. Record the sigma meter readings and the reactor power.
13. Enter the information in the logbook.

10.2.2 TSR-II and Personnel Protection Checks

The reactor control system is designed so that in most instances some action occurs to prevent or warn of impending trouble before a shutdown occurs; therefore, during routine operation, the ability of the shutdown system to function is not demonstrated. Various interlocks and detectors are operable to protect personnel from inadvertent exposure to radiation from the operating reactor, and these devices are tied into the reactor shutdown system. However, since they are the ultimate protection, it is mandatory that all Senior Operators be assured that the shutdown systems will function correctly when it is necessary.

The frequency of operational checks for the more important shutdown mechanisms are listed in the Technical Specifications Surveillance Requirements (Section 9). In addition, the following operational checks will be made during each week in which the reactor is operated:

1. Shim Pump Special Operation
2. Startup Switch
3. Rod Drive Test Switch
4. Period Scram

The weekly operational checks are divided into two categories: one is the reactor operational checks, the other is the personnel protection checks. The checklists for both categories can be found in Appendix A. Prior to the initiation of operation after a shutdown for maintenance or alterations, all the items on the TSR-II Operational Checks will be performed.

It is the responsibility of the Senior Operator to see that the routine operational checks are made. The Senior Operator on duty will be responsible for making the checks following maintenance or alterations before the reactor is operated. Some of the checks are to be made with the reactor shut down and some will be used to terminate routine operation.

For checks which are to be made before operating, the reactor will be checked out according to the routine operating procedure, with the magnet current on but with the rods in their seats. It will be a sufficient indication to the Senior Operator that the scram circuit functions correctly if the Senior Operator observes that all magnet currents drop to zero, except for level scram check. Some checks will be made by demonstrating that the scram condition will not clear. The reactor operational checks will be made by the Operator as outlined below.

1. Manual scram (HS-10B): (1) turn HS-10B clockwise, and (2) counterclockwise. (This is performed daily and is not on the weekly checklist.)
2. Safety level check (three channels): if the rector is not operating, proceed through the usual startup and pick up the rods 0.1 in. See that the magnet currents are as posted. Simultaneously depress the Jordan buttons of two of the three sigma amplifiers and check that all the shim-safety plates go into their seats.
3. Delta pressure of reactor: Reduce main flow; relay K-138 should be energized and a scram should occur at 10.5 psi.
4. Main pump flow: Reduce main pump flow; relay K-42 should be deenergized and a scram should occur at 500 gpm.
5. Delta temperature across reactor (two channels): Depress the test signal switch on the amplifier at the console until ΔT is more than 14°F.
6. Turn the shim pump special operate switch from NORMAL to SPECIAL.
7. Turn the startup key switch to OFF.
8. Turn the Rod Drive Test Switch from NORMAL to INHIBIT.
9. Switch the log N calibrate switch from Lo-cal to Hi-cal.

The personnel protection checks will be made as follows:

1. Adjust the zero on the south hall monitron until a monitron high level alarm occurs. Place a gamma source near the monitron at the north door. This should give a MONITRON SCRAM.
2. Repeat 1, but place source near the escape hatch monitron. Results as in 1.
3. Reset zero on the south hall monitron.
4. Adjust zero on the north door monitron until a monitron high-level alarm is obtained. Again place the source near the escape hatch monitron until a MONITRON SCRAM occurs.
5. Repeat 4, but place the source near the south hall monitron.
6. Reset zero on the north door monitron.

The above procedure checks the action of the make-up and drop-out shutdown relays for 2 out of 3 combinations of monitron high-level indication. To make the following checks, it is necessary that the reactor in-pool float switch be out of the water and the reactor ready to operate:

1. Open the north door.
2. Open the ramp gate.
3. Open the north gate in the 600-ft fence.
4. Open the west gate in the 600-ft fence.
5. Open the escape hatch gate.
6. Place the gamma-ray source near the ramp monitron until a radiation alarm occurs or set the monitron switch to the high range. Open the east ramp door.
7. Repeat item 6 for the west ramp door. Restore the system to normal.
8. Depress the remote manual scram at the ramp hoist station.
9. Depress the remote manual scram at the escape hatch.

To make the following checks, the operator must clear the area interlocks with a helper outside the control building:

1. To ensure that the control drives will not operate, place the rod drives at the insert limit and withdraw the fission chamber until the recorder indication for the fission chamber is driven down to below 2 cps.
2. Make up the area interlocks and reset the startup switch.
3. Depress the remote manual scram at the pool hoist station.

4. Repeat item 2 then insert key switch in hoist station and turn handle to reset.
5. Repeat item 2 then depress hoist stop button and remove key from hoist control station.
6. Repeat item 2 then turn off reactor key switch.

10.3 INSPECTION

For each component in the TSR-II water cooling system, the frequency of maintenance and the name of the responsible person are recorded on Plant and Equipment Program Maintenance cards. Items which require more frequent inspection are listed in Sections 10.1.3 and 10.2.2 and on the checklists included in Appendix A. In addition, shift personnel will, on request, periodically note the status of certain components and, if abnormalities are discovered, will report them to the Shift Supervisor for immediate action.

10.3.1 Daily Inspections

A typical checklist which is used in the daily inspections is included in Appendix A. In general, rotating machinery is considered to be in normal condition when the bearings run smoothly without an exessive temperature rise, with the additional criterion for pumps that the seals not leak excessively (experience with the different pumps is necessary for this evaluation). The itinerary and procedure for checking the items on the Daily Checklist are outlined in the following paragraphs.

Before starting rounds, the observer requests a shift supervisor to turn on the pumps, air intake fans, etc. The first items are at the reactor console in the control building (7702). Before leaving 7702, the observer will check the items in the electrical distribution room. When leaving 7702 by the north door, the fire alarm monitor system located in a small room off the north entryway should be checked. The operator will check for leaks in the water-to-air radiator in Building 7706 and, if appropriate, the operation of the heaters. In Building 7705, which is adjacent to Building 7706, the operator will check the demineralizer equipment in the north room and a large number of items in the south or pump room. The north room of Building 7707, which is immediately west of Building 7705, houses the rectifier equipment and the south room contains the battery banks both of which the

operator will check. Proceeding southwest from the battery room, the observer will check the items in the hoist building (7703) and then check the equipment between the hoist building and the main tower structures which includes the items at the pool (7701). The last items that the observer will check outside are the reactor and experimental equipment. These checks may change depending on the experimental program and the weather conditions. The observer enters Building 7702 via the ramp. The observer returns to the reactor console to make a radio check and inform the shift supervisor.

The checklist procedure is as follows (only those items requiring explanation are included):

1. Turn on the fill, dc-powered circulating, main, demineralizer, and shim pumps.
2. Record outside air temperature as indicated by the multipoint Brown temperature recorder at the reactor control console.
3. Record the temperature of the demineralized water as indicated on the recorder mentioned in step 2.
4. Check that the heater for the demineralized water is on if the outside air temperature has dropped below 40°F.*
5. Check that the pump for circulating the demineralized water is on if the water temperature has dropped below 11°C.*
6. Record the turret temperature as indicated on the Brown recorder (Item 2).
7. If the turret temperature has fallen below 11°C, add auxiliary heat.
8. Record the process instrument air pressure as noted on the gage on the west wall north of the reactor control console.
10. Note whether the charging current is at expected value for load and whether all the charge indicating floats of all fire protection system batteries are up.
11. Record the level of water in the demineralized water storage tank.
12. Check the oil level for the demineralized-water circulating pump, and if the air temperature is below 40°F, see whether the pump is operating normally.

---

*Items 4 and 5 will be checked after item 9, but they are grouped with item 3 which indicates the expected condition for items 4 and 5.

13. Record the level (0, 1/4, 1/2, 3/4, F) of base-pressure reference fluid in the sightglass at the 100-ft level of tower leg No. I, or check reference pressure (approximately 40 psi) if reactor is in the Big Beam Shield.
14. During the winter months, check the fan heaters, which should be on if the air temperature is below 40°F. If the weather is dry, check for any indication of water leakage from the air-cooled radiators.

10.4 MAINTENANCE

10.4.1 Maintenance Scheduling

At the beginning of each calendar year, the Senior Operator will consult with the foremen and fill out a wall chart indicating the scheduled weeks for the routine checks, calibrations, inspection, and maintenance. The Senior Operator will contact the foreman involved before the work is to be done in order to schedule reactor downtime to do the work. When the work has been completed, the Senior Operator will note in the log the work that was done and indicate work completed on the wall chart.

When nonroutine maintenance is necessary, the Senior Operator will note the need in the TSF Log and schedule the work with the appropriate foreman. The Senior Operator will describe the work in the facility logbook. The foreman involved will turn in the appropriate information to their record clerks so that the information is entered in the computer records.

10.4.2 Tag-Out Precautions

In some cases minor maintenance, such as lubricating, can be performed while the equipment is in operation with no hazard to the maintenance mechanic. In those cases where considerable hazard might arise if the equipment is started up while maintenance is being performed, the following steps will be taken before maintenance is started:

1. The Senior Operator will place "hold-off" tags, which must be dated and signed, at the proper control switches at the reactor console or other remote control points and at the proper local control points.
2. The Senior Operator will turn off the proper main breakers and issue a tag-out lock and its key to any individual who is going to work on the equipment but does not have a lock.

10.4.3 Instrumentation and Controls Maintenance Schedule

The cards which state the necessary maintenance by I&C personnel are issued weekly. Tabulated below is a list of items to be checked by weeks during each quarter.

First and Third Quarters

1. Check the mechanical operation of the recorders in the console including the operation of all microswitches (third quarter only).
2. Check the calibration of the recorders in the console (third quarter only).
3. Check the operation of the magnet amplifiers, sigma amplifiers, and the log N amplifiers.
4. Check the operation of the servo amplifier and picoammeter.
5. Determine the drop current and set the operating current for each magnet amplifier.
6. Check the operation of the pulse amplifier in the start-up channel.
7. Check the operation of the count-rate meter used in the startup channel.
8. Check the operation of the decade scalers used in the startup channel.
9. Check the output of the high voltage supplies used in the counting systems.
10. Measure the response times of the shim-safety plates.
11. Check the operation of the compensated chamber power supplies.
12. Check operation of the building monitrons (first quarter only).
13. Calibrate the sensors, transmitters, monitors, and controllers for the temperature, flow, and pressure channels.

Second and Fourth Quarters

1. Bench check the operation of the magnet amplifiers, the sigma amplifiers, the preamplifiers, the log N amplifiers, and the startup channel pulse amplifier.
2. Determine the drop current and set the operating current for each magnet amplifier.
3. Check all components of the seat switch systems and clutch switch systems (second quarter only).

4. Check all vacuum tubes and bench check the television cameras and receivers (second quarter only).
5. Check operation of all electronics equipment for the water activity monitor (second quarter only).
6. Check the electronic equipment in the sling boxes, if accessible (second quarter only).
7. Measure the response times of the shim rods.

10.4.4 Maintaining Reference Fluid in Variable Base-Pressure Regulator

Since the reactor is capable of being lifted to an altitude of approximately 185 ft., the base pressure at the system in the reactor vessel must be maintained at a level which will ensure that the system stays full of water. This is the function of the fill and pressure pump and the variable pressure regulating system (described in sections 4.3.5 and 4.3.6, respectively).

Reference Liquid - In selecting the liquids, the specific gravity, the freezing point, the viscosity, the flash points, the coefficient of expansion, and the toxicity had to be considered. The liquid used for the reference pressure is a solution of ethylene glycol (80 vol%) and water (20 vol%). This solution has a freezing point below -10°F and a specific gravity of 1.10 at 70°F. Changes in specific gravity as a function of temperature are shown in Fig. 10.1.

Operating Pressures and Capacities - The reference pressure system reservoir on tower leg I is mounted approximately at elevation 1197. The control valve elevation is approximately 1062, giving a column height of 135 ft. This gives a reference pressure of 135 x 0.433 x 1.10 = 64.4 psi with the reactor at ground level. With the reactor at maximum altitude, the sling bar reservoir is approximately at elevation 1275, giving a column height of 213 ft. This gives a reference pressure of 213 x 0.433 x 1.10 = 101 psi. Performance checks indicated that these reference pressures will maintain a full reactor system. With the reactor in the Big Beam Shield, the reference pressure is set at 40 psi which is more than sufficient to maintain a full reactor. With the reactor at maximum altitude, the sling bar reservoir is approximately at elevation 1275, giving a column height of 213 ft. This gives a reference pressure of 213 x 0.433 x 1.10 = 101 psi. Performance

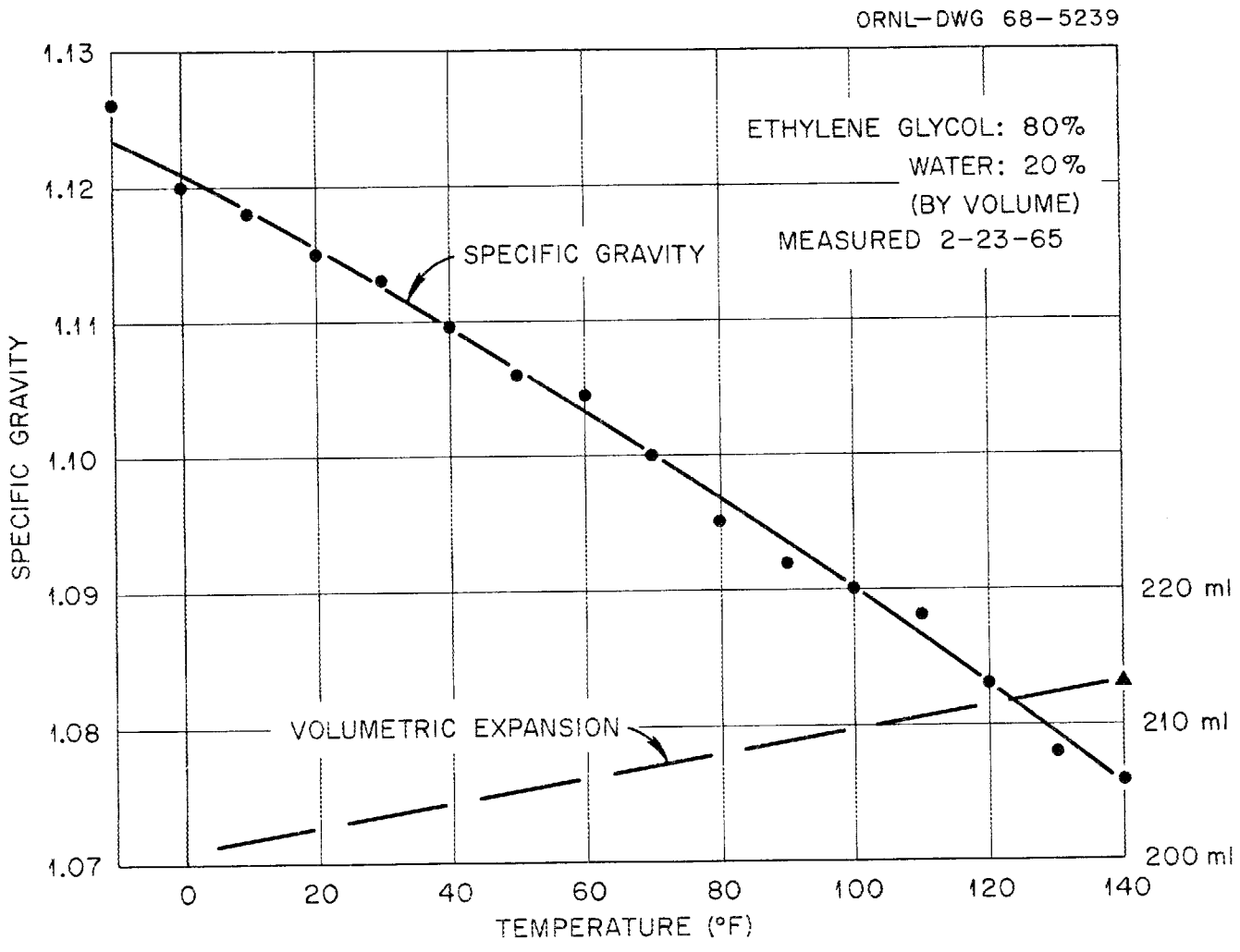

Fig. 10.1. Specific gravity of liquid as a function of temperature.

checks indicated that these reference pressures will maintain a full reactor system. With the reactor in the Big Beam Shield, the reference pressure is set at 40 psi which is more than sufficient to maintain a full cooling system [reference column height is 40 divided (0.433 x 1.10) = 84 ft]. The lower column height is used to reduce the system operating pressure.

The base pressures necessary to ensure a full reactor system are as follows:

Reactor on Ground

rigid standpipe elevation	= 1193.21
control valve elevation	= 1062
total fluid head	= 131.21 ft
minimum system base pressure	= 131.21 x 0.433 = 58 psi.

Reactor at Altitude

return sling bar elevation	= 1275
control valve elevation	= 1062
total fluid head	= 213 ft
minimum system base pressure	= 213 x 0.433 = 92.2 psi

Reactor in Big Beam Shield

top of turret elevation	= 1086.25
control valve elevation	= 1062
total fluid head	= 24.25 ft.
minimum system base pressure	= 24 x 0.433 = 10.5 psi

Figure 10.2 shows the increase in the minimum necessary base pressure and the reference pressure as the sling bar elevation changes from 1197 to 1275.

The fill and pressure pump will deliver approximtately 16 gpm against 100 psi pressure and approximately 28 gpm against 60 psi

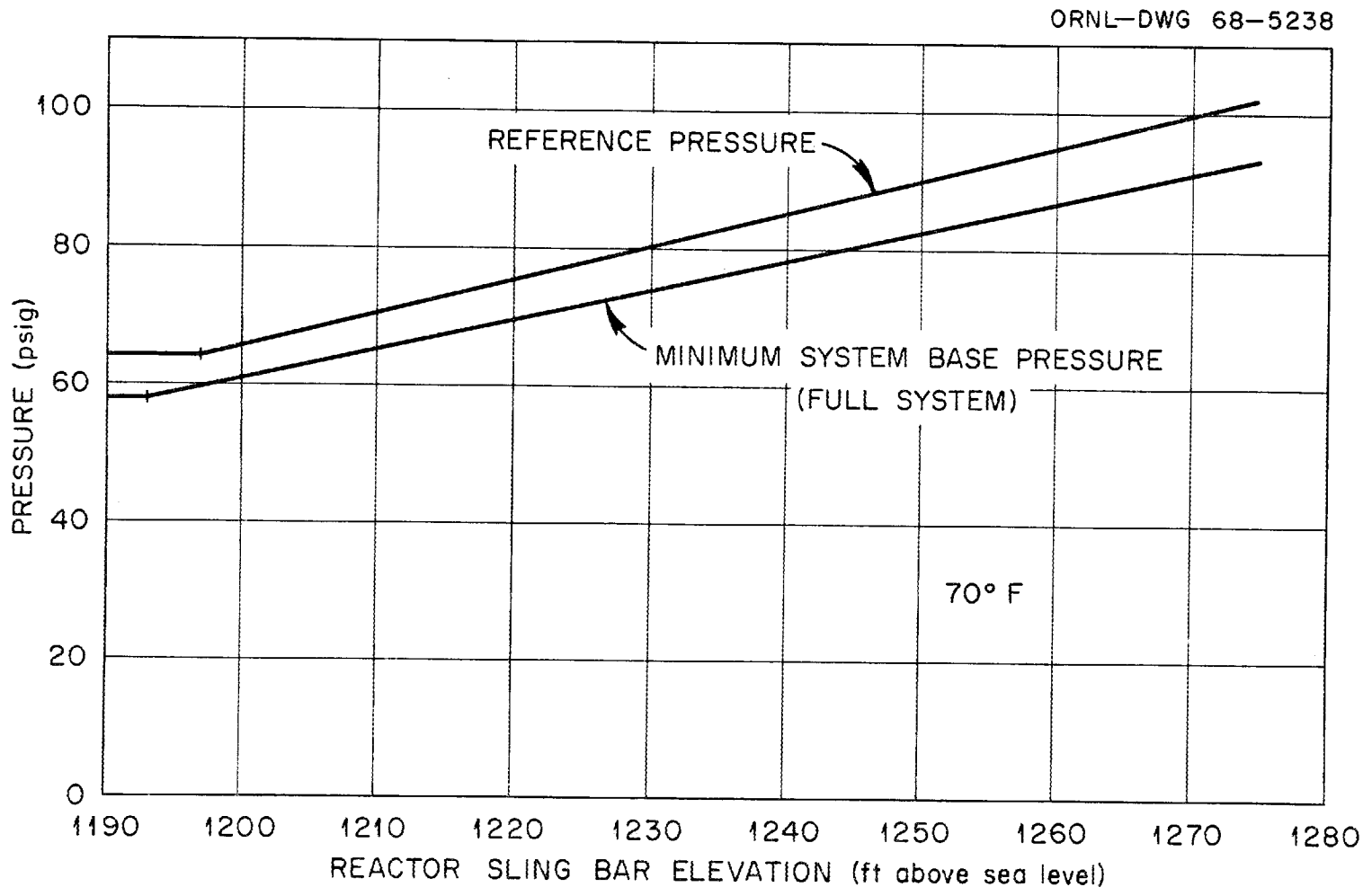

Fig. 10.2. Minimum necessary base pressure and reference pressure as a function of sling bar elevations.

pressure. The capacity of the differential pressure control valve is as follows:

Pressure drop across valve (psi)	Percent valve travel (open)	Flow (gpm)
100	100	100
	70	35
	50	16
60	100	80
	70	26
	50	13

The control valve has a throttling action and operates in the range of fully closed to 70% open during normal operation with the excess capacity available in case of an abnormal occurrence.

Mixing the Solution - The reference fluid may be mixed in any large container. The ethylene glycol (technical grade) is stocked in Laboratory Stores in 1-kg bottles. By mixing four bottles of ethylene glycol and one bottle of water, the proper solution is obtained. McCormick red food coloring is used to color the solution for visual observation in obtaining proper fluid level.

Filling the System - Refer to schematic of base pressure regulating system (see Fig. 10.3) for component identifications in the following fill sequence:

1. Check fill valve to ascertain that it is closed.
2. Open vent valve to relieve any pressure in fill tank.
3. Remove pile cap and check fluid level in fill tank with a dipstick. (Full capacity of fill tank is approximately 2 3/4 gal.)
4. Reinstall pipe cap.
5. Close vent valve.
6. Connect nitrogen bottle to pressurizing valve.
7. Open pressurizing valve.
8. Adjust pressure in fill tank to 80 - 85 psi as indicated on fill tank pressure gauge.

ORNL-DWG 68-5237

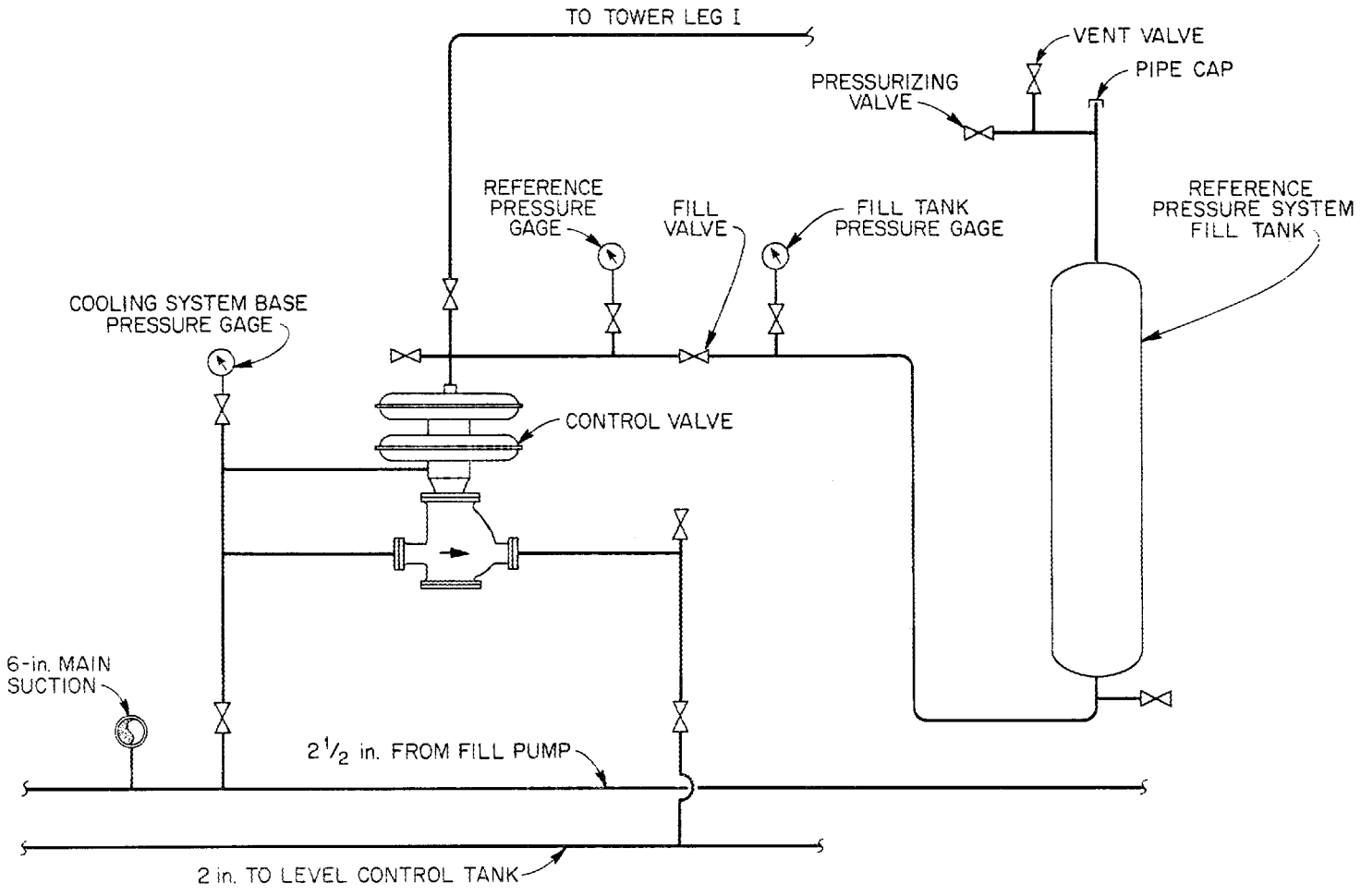

Fig. 10.3. Schematic of TSR-II base pressure regulator.

9. Crack fill valve and observe fluid rise in sightglass on tower leg No. I; or, if reactor is in Big Beam Shield, stop filling and check reference pressure gauge; fill stepwise until gauge reads 40 psi.

CAUTION

Do not overfill system. A maximum fill level is marked on the sightglass to leave an expansion volume. Do not fill past this band.

System Capacities

Rigid tube standpipe	450 in.^{3}	
Flexible tube	175 in.^{3}	
Tower leg reservoir	195 in.^{3}	(does not include air release valve)
Sling bar reservoir	160 in.^{3}	(including air release valve)
Valve diaphragm casing	80 in.^{3}	
	1060 in.^{3}	or 4.6 gal.

Special Materials - The more common materials such as rubber or neoprene which are used for gaskets and O-rings deteriorate under prolonged contact with the reference pressure liquid. To eliminate this problem, Teflon has been used throughout the system as gasket and O-ring material. The diaphragm in the differential pressure regulator which is in contact with the reference liquid is of Viton.*

*A DuPont fluor-elastomer.

11. REACTOR ASSEMBLY, DISASSEMBLY, AND CRITICAL EXPERIMENTS

Table of Contents

	Page
11. REACTOR ASSEMBLY, DISASSEMBLY, AND CRITICAL EXPERIMENTS	11-1
11.1 INTRODUCTION	11-1
11.2 REACTOR DISASSEMBLY NECESSARY TO REMOVE A CONTROL MECHANISM HOUSING	11-1
11.2.1 Preparation and Disassembly Prior to Removal of Upper Fuel Elements	11-2
11.2.2 Removal of Upper Fuel Elements	11-3
11.2.3 Procedure for Removal of a Control Mechanism Housing	11-4
11.3 PROCEDURE FOR INSTALLING A CONTROL MECHANISM HOUSING AND REASSEMBLY OF REACTOR	11-5
11.4 PROCEDURES FOR CRITICAL EXPERIMENTS ASSOCIATED WITH SHIELD CHANGE	11-9

11. REACTOR ASSEMBLY, DISASSEMBLY, AND CRITICAL EXPERIMENTS

11.1 INTRODUCTION

The procedures in this section are intended to ensure that any changes in the reactor or shields which can affect the reactivity are made in a safe, precise fashion which has been formulated and approved in advance. The work indicated is performed infrequently, and the material herein should be considered only as the basis of procedures which will be formulated and reviewed just prior to the actual work. In this manner, the personnel involved will develop the checklists which they will use.

11.2 REACTOR DISASSEMBLY NECESSARY TO REMOVE A CONTROL MECHANISM HOUSING

The following procedures for removing a control mechanism housing from the TSR-II applies only to the case where none of the annular, upper, or lower fuel elements are to be replaced with new fuel elements.

This procedure is outlined to avoid any potentially dangerous condition, and to this end the senior operators, operators, and other staff members are to follow the procedures explicitly. In particular, it must be emphasized that the insertion of an upper fuel element into the central cyclinder when no control mechanism housing is present would result in a catastrophic nuclear excursion. As outlined in the procedure, the central cylinder is never to be left open if a control mechanism housing is not in position in the central cylinder unless some work is being performed in that region with the required supervision.

The minimum personnel required to perform the work outlined is specified in Section 9.9. Craft personnel are to be scheduled as required.

The Quality Department will be notified to make appropriate inspection of the pressure vessel whenever the system is opened.

This procedure is meant to be an outline, and it must be written in a checklist form with appropriate indications for the conditions at hand and approved by the TSF Supervisor each time it is used.

11.2.1 Preparation and Disassembly Prior to Removal of Upper Fuel Elements

The following is a checklist for disassembly prior to removal of the upper fuel elements:

1. Check out the reactor hoisting system (see Chapter 6); then use the hoists to move the iron frame over the neck of the reactor handling pool to the west end of the top of the slabs covering the pool, and use the motor crane to remove the slabs from the neck of the pool.
2. Connect hoist to shed over the reactor, unbolt the shed from the concrete, and remove shed from the shield.
3. Turn off and tag out all TSR-II water pumps. Drain the reactor cooling system into the hot dump tank.
4. Disconnect the control cables at the turret and lay the cables on the concrete shield. Remove the chambers and the fission chamber drive.
5. Remove the pressure differential cell and the shim and seat filters. Plug all open connections.
6. Remove the scram solenoids.
7. Mark the alignment between the pressure vessel and the ionization chamber guide assembly and then remove hold-down bolts.
8. Unbolt and remove the turret.
9. Disconnect 6-in. pipe sections at reactor and use the motor crane to place them on experimental pad, cover pipe openings.
10. Disconnect the shim-line hose at the reactor and remove section of pipe to the flange at west of the shield.
11. Operate the hoist and position the reactor support platform so that the reactor can be disconnected from the shield. Connect control line to hydraulic pump and rotate the bearing on the support platform so that the support platform will pick up the reactor; then disconnect control line.
12. Clear unnecessary personnel from the area, attach a long soft line to east and west sides of reactor support structure and monitor the radiation level while carefully raising the reactor out of the shield. Suspend the pressure vessel in the neck handling pool on the special reactor support platform with removable end.

13. With reactor sitting on support pins, reconnect control cable and rotate support ring to disengage reactor and support platform; move support platform away and disconnect from hoists.
14. Suspend lifting yoke from motor crane and connect yoke to the ionization chamber guide assembly (use special eye bolts).
15. Position beams in neck of pool to support ionization guide assembly in the pool.
16. Carefully ease up ionization guide assembly. If binding occurs, stop and check for control mechanism housing support tube binding.
17. If assembly is free, carefully raise it and check the radiation level as it is raised.
18. Suspend ionization guide chamber assembly in the pool through 4-ft-diameter opening in slab shields.
19. Using main hoists, position iron frame with chain fall over the neck of the handling pool; connect reactor support frame to chainfall.
20. Suspend fuel storage rack in the reactor handling pool.
21. Calibrate a fission chamber that can be submerged in water above the fuel.
22. Place calibrated fission chamber and reactor fission chamber above fuel and determine the count rate.
23. Place Americium source on fuel in a position remote from the fission chambers and obtain count rate. Note positions of chambers and source so they may be reproduced.
24. The neutron source may be removed if the count rate is high enough.
25. Measure and record the distance from the top of the central cylinder to several positions on each fuel element.
26. Connect speaker and microphone so that neutron counts are audible at the pool.
27. At some point in procedure, have the Quality Department inspect central cylinder and pressure relief valves.
28. Loosen one fuel element.
29. If above items were accomplished without difficulty, proceed according to procedure for Removal of Upper Fuel Elements.

11.2.2 Removal of Upper Fuel Elements

The following is a procedure for removal of the upper fuel elements:

1. Attach handling tools to fuel element. Note position and get element number from logbook.

2. Pull the top of the control mechanism housing support tube to one side and tie it off.
3. Suspend reactor from support frame so it can be lowered into pool.
4. Work the fuel element free and lower the reactor while holding the fuel element.
5. Transfer fuel to rack, placing element in left-hand position looking down.
6. Make sure element is locked in rack and then remove handling tools.
7. Raise reactor.
8. Repeat steps 1-7 for 2nd element.
9. Repeat steps 1-6 for 3rd element.
10. Repeat steps 1-6 for 4th element.
11. Leave control mechanism housing in the central cyclinder.
12. Attach rope to the fuel element storage rack and lower the rack to the bottom of the pool.

11.2.3 Procedure for Removal of a Control Mechanism Housing

The following procedure is for the removal of the control mechanism housing:

1. Attach motor crane hoist to stem of control mechanism housing with adaptor.
2. Remove hold-down bolts from the control mechanism housing.
3. Retain hand contract with stem of control mechanism housing to detect any binding and proceed to raise the control mechanism housing with the motor crane and observe radiation level. Halt movement when radiation approaches 20 mR/h.
4. Raise reactor slightly with chainfall, remove I-beam supports, retain hand contact with stem and proceed to lower reactor with chainfall. Motor crane should be kept operating while the reactor is being moved.
5. Move control mechanism housing south with motor crane and, with special adaptors, hang the control mechanism housing in the neck of the pool.
6. Raise the reactor. With the chainfall, place it on I-beam across the top of the overflow drain, and disconnect chainfall.

7. Using underwater light, inspect the baffle plate in the central cylinder for debris. Clean with suction line from pump if necessary.
8. Bolt special cover plate on central cyclinder or proceed to install the new control mechanism housing according to reassembly procedures.

11.3 PROCEDURE FOR INSTALLING A CONTROL MECHANISM HOUSING AND REASSEMBLY OF REACTOR

The procedures for replacing a control mechanism housing in the TSR-II when none of the annular, upper, or lower elements are to be replaced is essentially the reverse of the disassembly procedures and the same conditions apply.

1. Remove the central cylinder cover. (If the control mechanism housing which is to be replaced is still in place, refer to removal procedures.)
2. Use an underwater light and inspect baffle plate above the lower central elements. (If necessary, clean the baffle plate with jet pump.)
3. Attach chainfall (hand operated) to the new control mechanism housing stem.
4. Check to see if a neutron source is installed in the control mechanism housing. (Its number must be recorded in the log.)
5. Lower the control mechanism housing into position in the central cylinder.
6. Orient the housing according to logged position of previous control mechanism housing into position on the four lugs which are on the inside of the central cylinder.
7. Measure the distance from the top of the supporting lugs on the control mechanism to the top of the central cylinder. It must be 7 ft 10-3/16 in. (Consult previously logged values in all cases where a measurement is indicated.)
8. Measure the distance from the top of the upper fuel element support ring to the top of the central cylinder. It must agree with previous measurements.
9. Install bolts to hold control mechanism housing in place.
10. Position a calibrated fisson counter in the void to be occupied by the last upper fuel element to be inserted.
11. If necessary, place an additional neutron source in the space to be occupied by the second fuel element to be inserted.

12. Take several counts with the fission chamber and record them.
13. Make the fission chamber register audible at the reactor.
14. Slightly deflect and anchor the stem of control ball away from position where the first element is to be inserted.
15. Lower the reactor far enough to move fuel into the vessel under sufficient water to keep radiation level below permissible levels.
16. Raise the fuel element storage rack from the bottom of the pool and suspend it from the edge of the pool.
17. Connect handling tools to the fuel element, which is on the right looking down on the rack. (Elements should be replaced in the reverse order from which they were removed from the reactor.)
18. Remove fuel element from storage rack. One person must hold element release while another lifts the element.
19. Check that the control mechanism housing is in the central cylinder and only then move the fuel element into position over central cylinder and lower it into its original position in the central cylinder.
20. Raise the reactor.
21. Engage the fuel element with its beveled guide and seat the fuel element firmly in its original position on the control mechanism housing stem.
22. Observe count rate; record the count rate and indicate on the recorder the time the fuel element was inserted.
23. Measure and record the distance from the top of the fuel element to the top of the central cyclinder. The distance must agree with that measured in the reactor disassembly.
24. Place the source on the inserted fuel element in a position most remote from the fission chamber.
25. Take several counts with the fission counter and record them.
26. Again, lower reactor to insert fuel.
27. Connect handling tools to the fuel element which is in the second position from the right in the rack.
28. Remove the fuel element from the storage rack. One person must hold element release while another lifts the element.
29. Move the fuel element into position over central cylinder and lower it into central cylinder.
30. Raise the reactor.
31. Supervisor will observe the count rate as the fuel element approaches position and direct that it be lowered into position. (Do not release handling tools from the element.) Position element in its original position.

32. Observe count rate, and record the count rate and indicate on the recorder the time the fuel element was inserted.
33. Release element when Reactor Supervisor in charge has indicated that it is safe to do so.
34. Measure and record the distance from the top of the fuel element to the top of the central cyclinder. The distance must agree with that taken in the reactor disassembly.
35. Lower the reactor again to insert fuel.
36. Connect handling tools to the fuel element which is in the third position from the right in the rack.
37. Remove fuel element from the storage rack. One person must hold element release while another lifts the element.
38. Move the fuel element into position over central cylinder and lower it into the central cylinder.
39. Raise the reactor.
40. Supervisor will observe the count rate as the fuel element approaches position and direct that it be lowered into position. (Do not relese handling tools from the element.) Position element in its original position.
41. Observe count rate; record the count rate and indicate on the recorder the time the fuel element was inserted.
42. Move and anchor detector to top outer edge of third inserted element.
43. Observe count rate; record the count rate and time on the recorder.
44. Lower the reactor.
45. Connect handling tools to the last fuel element in the rack.
46. Remove fuel element from the storage rack. One person must hold element release while another lifts the element.
47. Move the fuel element into position over central cylinder and lower it into central cylinder.
48. Raise the reactor.
49. Supervisor will observe the count rate as the fuel element approaches position and direct that it be lowered into position. (Installing the last element is very difficult, and adjacent elements must be forcefully positioned with a wood-scissor type tool; usually several attempts are necessary. When element is in place, do not release handling tools from the element.)
50. Observe count rate; record the count rate and indicate on the recorder the time the fuel element was inserted.

51. Bolt down the first fuel element installed.
52. Bolt down the second fuel element installed.
53. Bolt down the third fuel element installed.
54. Bolt down the fourth fuel element installed.
55. Remove chambers and source.
56. Using special spreader, lift ionization guide chamber assembly and check radiation level.
57. Examine baffle plate on the ionization chamber guide assembly.
58. Examine control stem passageway.
59. Check that all O-rings are in place.
60. Check the rubber-nylon seal at top of ionization guide chamber lead-water region.
61. Move the ion-chamber guide assembly into position above the reactor.
62. Place one loop of light rope around stem of the control mechanism housing to guide the stem into the central opening of the ionization guide chamber assembly.
63. Proceed to lower the ion-chamber guide assembly and check continuously by hand for binding. If binding occurs, stop, reverse the process, and determine and eliminate the cause before proceeding.
64. Seat assembly then raise slightly, align marks, and examine O-ring.
65. Proceed to snug down opposite bolts, as directed by the supervisor in charge.
66. With main hoist, move iron frame from position over the neck of the pool to the top of slabs over the main pool. Set frame as far west as possible.
67. With the main hoist, lower support platform over the reactor pressure vessel.
68. Connect control cable and turn on special circuits; then rotate the reactor support platform main gear to engage the lifting lugs; remove control cable.
69. Clear area of unnecessary personnel, attach long soft lines to rigging above the reactor, extend the lines east and west, and have personnel monitor radiation level as the reactor is moved from the neck of the handling pool to the Big Beam Shield. Use pool hoist station while radiation level is low enough; then move to ramp station with observer at head of the ramp.
70. Connect control cable and rotate the reactor support platform support ring with worm gear to disengage the lifting lugs on the reactor pressure vessel; disengage control cable to rotation pump; then move support platform away.

71. Lift the turret with the motor crane and orient it so that the rack for the fission chamber is above the fission chamber well. This position should also be opposite the exit flange from the central cylinder.
72. Check to see that the shim rod drive shaft is set correctly as determined in check out of the control mechanism housing.
73. Check to see that the shim drive motor in the turret is at insert limit.
74. Slowly lower the turret and note that the following actions occur properly:

    a. Seat switch tubes into proper openings in the control mechanism stem.
    b. Shim drive shaft splines engage.
    c. Regulating plate drive shaft does not jam. The portion of the shaft connected to the drive gears should be fully inserted (raised).
    d. Bypass header lines, seat pump supply line, and core pressure reference line must fit into openings in the ionization chamber guide assembly top plate.

75. Bolt the turret into place.
76. Loosen setscrews in coupling on regulating rod drive shaft.
77. Screw the two mating pieces of the regulating rod drive shaft together.
78. Lift and engage the regulating rod drive shaft in the coupling and fasten setscrews. (Regulating plate drive must be at insert limit.)
79. Reposition and connect the 6-in. reactor inlet and exit pipe connections and snap the two shim line hoses to the turret connections.
80. Hoist the reactor shed into position on the Big Beam Shield and bolt it in place.
81. Make up quick-disconnect control cables to the turret and the chambers. (All are labeled and keyed.)
82. Connect dp cell tubing. (Make certain the bypass is open before opening inlet and outlet lines to dp cell, then close bypass.)

11.4 PROCEDURES FOR CRITICAL EXPERIMENTS ASSOCIATED WITH SHIELD CHANGE

The following is a general procedure for determining the reactivity worth of a new shield for the TSR-II. Prior to the experiment, calculations

will be performed to predict the expected reactivity change and a complete checklist of the experimental procedure will be prepared and approved by the TSF Supervisor. The minimum personnel required to perform the experiments is a senior operator and a reactor operator. The checklist will incorporate the following items:

1. Cadmium strips of known reactivity worth will be added to the annular elements. (This is because the normal shutdown margin is not very great.)
2. Additional sensitive neutron counters will be placed where they will give the most realistic picture of change in neutron multiplication.
3. The change in shield configuration will be made with only the necessary number of persons around the reactor, and the change is to be made with complete control of the shield; i.e., it should be possible to stop insertion of the reactor into the shield at any time. The change must be made stepwise and readings should be taken on the counters to ascertain if there is a significant change; if there is, remove the reactor and notify the TSF Supervisor.
4. If the change is made without any significant change in count rate, the area should be cleared and a regular critical experiment started.
5. The first reactor operation will be made with all the cadmium anchored in place.
6. If the reactor does not go critical, all rods will be inserted and then a cadmium strip will be removed from the reactor and the process repeated. The reactivity worth of the control rods is approximately ten times that of each cadmium strip.
7. If multiplication appears normal, cadmium may be removed in the above manner until all strips are removed and the reactor is critical with the shim and regulating plates in a previously noted safe region. If the reactor approaches criticality before all poison is removed, stop operations and notify the TSF Supervisor.

APPENDIX A

TOWER SHIELDING FACILITY CHECK SHEETS

Typical samples of the log sheets for operation of the TSR-II reactor and a summary sheet for reactor system readings are shown on the following pages. Also included are typical samples of the TSF Weekly Checks, TSR-II Operational Checks, Personnel Protection Checks, End-of-Shift Checks, TSF Daily Checks for the reactor cooling system and hoist house, and Main Hoist Slack-Bar Operational Checks.

TOWER SHIELDING REACTOR II OPERATION LOG SHEET

PAGE ___ OF ___

DATE	RUN NUMBER	SR. REACTOR OPERATOR	SECOND INDIVIDUAL	LOGS REV.	DAILY CHECKS OKAY	COOLING SYSTEM NORMAL	STARTUP CHANNEL CALIB.	PICO AMMETER ZEROED	LOG 'N CALIB

STARTUP CHANNEL CPS

CHAMBER INSERTED ___ CHAMBER AT ___ IN.

MAGNET CURRENT (ma) ZERO POWER

#1 #2 #3 #4

HORN OKAY

CLUTCH FLOW (%) SHIM DRIVE INSERT LIMIT

#1 #2 #3 #4

SCRAM CHECKS

MANUAL JOHDAN# OTHER

ANNUNICIATORS NOT CLEARED

EXPERIMENTAL SETUP

TIME	AIR TEMP. (°F)	WIND (MPH-DEG)	WEATHER CONDITIONS	SHIELD TEMPERATURE

BADGE CHECK

TIME GATE CLOSED	NO. BADGES LOCAL	NO. BADGES REMOTE	1	2	3	4	5	6	7	8	9	10	11	12	13	14	15

NOTES

TSR-11

DATE	RUN NUMBER	EXPECTED PLATE POSITION (in.) AT °F.		STARTUPS	RUN TIME (HRS)	KW-HOURS	UNUSUAL CONDITIONS
		SHIM	REGULATING				

TIME	RUN LETTER	NOM. POWER	FANS ON 1 S	FANS ON 2 N	FAN PITCH (%)	LOUV. OPEN	PICOAMMETER RECORDER	PICOAMMETER RANGE	STARTUP CHANNEL POS. (in.)	STARTUP CHANNEL CPS	LOG N	PLATE (in.) POSITION SHIM	PLATE (in.) POSITION REG.	TEMPERATURE (°F) REACTOR INLET	TEMPERATURE (°F) HEAT EXCH. OUTLET	TEMPERATURE (°F) REACTOR ΔT1	TEMPERATURE (°F) REACTOR ΔT2	MAIN FLOW	POWER (KW)	NOTE

* FOR POWER LEVELS ABOVE 500 KW DETERMINE POWER WITH FLOW – ΔT

TOWER SHIELDING REACTOR II SUMMARY SYSTEM READINGS

YEAR / MO-DAY	RUN NUMBER AND LETTER	REAC. ELEV. (FT)	NOM. POWER (kW)	MAIN PUMP PRESSURE IN.	MAIN PUMP PRESSURE OUT	MAIN PUMP FLOW (GPM)	REAC. Δ PRES. (PSIG)		WATER ACTIVITY MONITOR FLOW	WATER ACTIVITY MONITOR CPM	SHIM PUMP OUT. PRES.	SHIM PUMP HEAD. PRES.	CLUTCH FLOW (%) 1	2	3	4	5	CORE PRES.	

Above readings to be made at the initial operation each day (or once a week if no operation is scheduled).
Flow - gpm, Pressure - psig

TOWER SHIELDING REACTOR II SUMMARY SYSTEM READINGS

YEAR	RUN NUMBER AND LETTER	SIGMA AMP. (μ AMPS) AT POWER			LOG N	PICOAMMETER			FISSION CHAMBER		PLATE POS. (IN.)		REACTOR TEMP (°F)		HE OUT. TEMP °C	FAN ON		PITCH SET	
MO-DAY						ZERO SET	RANGE	DEM. SET	(IN.)	CPS	REG	SHIM	IN	OUT		1	2		

TOWER SHIELDING FACILITY WEEKLY CHECKS

YEAR / MO-DAY	POTABLE WATER LOW ALARM OPERATED	DEM WATER LOW ALARM OPERATED	TSR-II REACTOR FAN PITCH AND ROTATION NORMAL		FILTER HANDLES ROTATED			AIR DRIER BLED	PICO-AMMETER CALIB	PANEL LIGHTS		TSR-II SHIELD TANKS BLED	HOIST CHECK		
					SHIM		SEAT SWITCH SUPPLY						BATTERY OK	RECT. CURRENT	HOIST & LINES CLEAR
			SOUTH	NORTH	PUMP HOUSE	TURRET				ANNUNC.	PILOT				

TOWER SHIELDING REACTOR-II OPERATIONAL CHECKS

YEAR	SCRAM RELAYS OPERATE												PLATE SCRAM FROM 0.3"				REF. NOTE	
	STARTUP SW OFF*		CORE TEMP HIGH		TEMP HIGH		MAIN FLOW LOW		TEST ON		SHIM PUMP SPEC OPER		PER CHECK	JORDAN TEST			LOG	
			CH 160	CH 161	HE OUT R-IN		FLOW	ΔP										
MO-DAY	MU	DO	DO	MU	MU	DO	DO	MU	MU-DO		MU	DO	(✓)	S1	S2	S3	PG.	INIT.

A reactor operator will perform the above checks once a week (unless the reactor is not being used) and indicate the satisfactory completion of each by checking the appropriate block and of all by initialing the last column.

*Loss of area secure and run permit; MU - makeup and DO - dropout.

TOWER SHIELDING FACILITY PERSONNEL PROTECTION OPERATIONAL CHECKS

YEAR	CHECK BY LOSS OF AREA SECURE OR BY LOSS OF GATES, DOORS, HOISTS, MU AND DO EXCEPT RAMP DOOR														BLDG MONITRONS TSR-II						CK REMOTE MANUAL SCRAMS BY OPERATION OF SCRAM RELAY: DO-CH1, MU-CH2						
MO-DAY	ESCAPE HATCH		RAMP GATE		RAMP DOOR EAST	RAMP DOOR WEST	NORTH DOOR		NORTH GATE		WEST GATE		POOL HOIST		1 & 2		2 & 3		1 & 3		POOL		RAMP		HATCH		
	MU	DO	MU	DO	MU	DO	MU	DO	MU	DO	MU	DO	MU	DO	MU	DO	MU	DO	MU	DO	MU	DO	MU	DO	MU	DO	INIT.

A Senior Operator will perform the above checks once each week if the reactor is to be operated and indicate the satisfactory completion of each by checking the appropriate block and of all by initialing the last column.

When checking the remote manual scrams at the pool hoist control station and the guard house at the 600-ft fence, the Operator will keep the shim plates in their insert limit.

TOWER SHIELDING FACILITY END-OF-SHIFT CHECKLIST

MO-YEAR	DAY																		
TSR-II SECURE																			
TSR-II RECORDER CHARTS OFF																			
TSF HOISTS SECURE																			
TSR-II LOUVERS CLOSED																			
PUMP MODE SET FOR WEATHER																			
OPERATIONS NOTIFIED OF CHANGES IN PUMPS																			
SOURCES STORED																			
PORTABLE SURVEY METERS STORED																			
NORTH 600-FT GATE OPEN																			
ACCESS CONTROL OFF																			
TELEVISION CAMERAS; RADAR SECURE																			
CBS SHUTTER CLOSED AND POWER OFF																			
LOG ENTRIES COMPLETE																			
UNUSUAL CONDITIONS POSTED																			
OFFICE FILES SECURE																			
SECURITY LIST SIGNED																			
UNUSED LIGHTS OFF																			
INITIALS																			

TOWER SHIELDING FACILITY DAILY CHECKS
(Sheet 1)

Year Month Day									
Time									
Temperatures Outside Air (°F)									
Beam Shield (°C)									
Dem. Water (°C)									
Reactor Turret (°C)									
C.R. Air Pressure (psig)									
Water Activity									
Safety Cabinet Secure									
Emergency Light OK									
7704 dc Fan On									
Esc. Hatch Exit Light On									
Exit Routes Clear Bldg. 7704									
Bldg. 7702									
North Exit Light On									
7702 dc Fan On									
Potable H_2O Tank (psig)									
Dem. H_2O Tank									
Pump On									
Heater On									
Gallons (K's)									
Pump OK									
Fire Protection System OK									

TOWER SHIELDING FACILITY DAILY CHECKS
(Sheet 2)

Year Month Day									
Waste Vol. (Frac. Full)									
H.E. Heaters On (Temp. <50°F)									
NE									
SE									
NW									
SW									
Demineralizer Flow (% scale)									
H_2O Pres. (psig)									
Air Pres. (psig)									
Inlet Resistivity (MOhm-cm)									
Outlet Resistivity (MOhm-cm)									
Exhaust Fan On									
Filter Pres. (psig) Upstream Inlet									
Upstream Out									
Downstream Inlet									
Downstream Out									
Dem. Pump OK									
Pres. (psig)									
Fill Tank Level (in.)									
Water Activity Alarm OK									
Water Activity Flow >100									
Main Pump OK									
Outlet Pres. (psig)									

TOWER SHIELDING FACILITY DAILY CHECKS
(Sheet 3)

Year Month Day									
System Base Pres. (psig)									
System Ref. Pres. (psig)									
Pipe Heater Current Flowing in 12A, 12B, 14, or 15									
dc Pump OK									
Pres. (psig)									
Shim Pump OK									
Pres. (psig)									
Drip Rate OK									
Fill Pump OK									
Pres. (psig)									
Nash Compressor OK									
Rcvr. Pres. (psig)									
Separator Pres. (psig)									
Seal Pres. (psig)									
Coolant Pres. (psig)									
Coolant Flow (% scale)									
Separator Level									
Air Dryer									
Flow Indication									
East Tank Pres. (psig)									
West Tank Pres. (psig)									
Bldg. 7705 Exhaust Fan On									

TOWER SHIELDING FACILITY DAILY CHECKS
(Sheet 4)

Year Month Day									
Rectifiers 120-V Fan On									
120-V Current (A)									
Room Exhaust On									
Flotrol Current (A)									
Schauer Current (A)									
Batteries H_2O Level OK									
No Excessive Bubbling									
Exhaust Fan On									
Turret Condition OK									
Core Inlet Pressure (psig)									
Beam Shutter Power Reset									
Beam Shutter Heater On									
Pad Condition OK									
Radiation Signs OK									
Low Temperature Protection OK									
Radiation Monitors OK North Exit									
South Hall									
Escape Hatch									
Ramp									
High Level									
Pool Hoist									
Experiment Pad									
Radio Check Time									
Initials									

MAIN HOIST SLACK BAR OPERATIONAL CHECKS

1. Inspection

	HOIST					
	I	II	III	IV	B	D
Hoist Cable Clear Outside Hoist Buildings	____	____	____	____	____	____
Hoist Cable Clear Inside Hoist Buildings	____	____	____	____	____	____
Drum and Drive Clear	____	____	____	____	____	____
Cable Lay Correct	____	____	____	____	____	____
Resistor Bank Clear	____	____	____	____	____	____
Meter on Hoist Battery Charger Reads	____					
Battery Liquid Level Between Marks on Each Battery	____					

2. Operation of Relays and Indicating Lights by Slack Bar

	HOIST					
	I	II	III	IV	B	D
For Upper Slack Bar:						
Light On						
Left	____	____	____	____	____	____
Right	____	____	____	____	____	____
For Middle Slack Bar:						
Left	____	____	____	____	____	____
Right	____	____	____	____	____	____
For Lower Slack Bar:						
Left	____	____	____	____	____	____
Right	____	____	____	____	____	____

MAIN HOIST SLACK BAR OPERATIONAL CHECKS
(continued)

3. Drum Inhibition by Operation of Slack Relays

	HOIST					
	I	II	III	IV	B	D
For Lower Test Button - Station						
No Lowering Motion						
No Hoisting Motion						
Bell Operates						
Fault Light Operates						
Hoist Light Operates						
For Upper Test Button - Station						
No Lowering Motion						
No Hoisting Motion						
Bell Operates						
Fault Light Operates						
Hoist Light Operates						

APPENDIX B

DESCRIPTION AND ABBREVIATED NOMENCLATURE FOR OUTER SHIELDS AND REFLECTORS

As described in Section 4.1.8, the reflector materials inside the pressure vessel and the shield configurations external to the pressure vessel may be changed. The shield configurations external to the reactor pressure vessel are denoted by names or abbreviations, followed by letters that denote modifications in the shield, as shown below:

Bare-A	Only air external to the reactor pressure vessel
Bare-B	Reactor pressure vessel submerged in water
CI-A	COOL-1 shield (ORNL General Engineering Dwg. M-20858-EJ-126-D) as originally fabricated (Al, 1/4 in.; Pb, 1 1/2 in.; Al, 1/4 in.) with 3/8-in. water gap between shield and pressure vessel and with the reactor suspended in air
CI-B	Same arrangement as CI-A but with a 1 1/2-in.-thick, appx. 12-in.-high cylindrical shell of lead added above the original fixed lead and a B_4C and oil mixture placed between the shield and the pressure vessel
CI-C	Same as CI-B but with the B_4C and oil replaced with water
CI-D	Same as CI-C but with shield submerged in water
CII-A	Outer COOL shield (General Engineering Dwg. M-20858-EJ-127-D) as originally designed (Al, 1/4 in.; Pb, 3 in.; Al, 1/4 in.; Boroxy, 1/4 in.; water, 7 in.; Al, 1/4 in.; water, 2 in.; Al, 1/4 in.) over CI-B (General Engineering Dwg. M-20858-EJ-123-D) with B_4C and oil in the 1/2-in. gap between the COOL shields, borated water in the 7-in. inner region, and plain water in the outer region; shield can be in air or submerged in water

CII-B	Same as CII-A but with borated water in both inner and outer regions
CII-C	Same as CII-A but with plain water in both inner and outer regions
Beam-A	Beam shield (General Engineering Dwg. M-20858-EJ-106-D), steel, 1/4 in.; Pb-H_2O each 50% by vol., 16 5/8 in.; steel, 1/4 in.; water, 31 in.; steel, 1/4 in.; plain water in the inner and outer region and the 1/2-in. gap between the pressure vessel and the shield; shield can be in air or submerged in water
Beam-B	Same as Beam A except with all water drained form the shield
PW-A	Lithium hydride, depleted uranium shield designed by Pratt and Whitney

The reflector is made up of five pieces, with the major one consisting of a hemispherical shell mounted below the core. The remaining four pieces mate with each other and the lower half to form a spherical shell that surrounds the core except for a penetration by a permanent lead-water shield that is mounted directly above the core. Shaped plugs of shielding material may be mounted on the top side of each of the four outer-reflector pieces.

To identify the combination of shield configuration, reflector, and shaped plugs, the number which identifies the outer reflector and shield plug configuration is affixed to the abbreviated nomenclature for the shield configuration. For example, CI-A3 represents the original COOL-I shield with a reflector that has a 3/4-in. aluminum shell followed by 3 1/2 in. of H_2O, then 4 in. of Pb, 1/4 in. of aluminum, and finally H_2O for the upper hemisphere and no shaped shield plugs.

The various combinations of materials which have been used for the reflector and the shaped plugs are described in Table B.1.

Table B.1. Materials used in various reflector and shaped plug configurations

No.	Lower reflector	Upper reflector	Shaped plugs
1	Al, 1/4 in.; Pb, 2 in.; boral, 1/4 in.; Al, 1/8 in.; H_2O, 1/2 in. (M-20858-EJ-132-D*)	Al, 1/4 in.; Pb, 2 in.; boral, 1/4 in.; Al, 1/8 in.; H_2O, 1/2 in. (M-20858-EJ-139-D and 142-D*)	H_2O & Pb each 50% by vol (M-20858-EJ-130-D*)
2	Same as No.1	Same as No. 1	H_2O
3	Al, 3/4 in.; H_2O, 3 1/2 in.	Al, 3/4 in.; H_2O, 3 1/2 in. Pb, 4 in.; Al, 1/4 in.; H_2O (M-20858-EJ-125 -D*)	H_2O
4.	Same as No. 3	Same as No. 1	H_2O & Pb each 50% by volume
5.	Same as No. 3	Same as No. 1	H_2O
6.	H_2O	H_2O	H_2O

*ORNL General Engineering drawings

INTERNAL DISTRIBUTION

1. S. J. Ball
2. G. H. Burger
3-32. L. B. Holland
33. R. V. McCord
34. Central Research Library
35. Document Reference Section
36. Laboratory Records Department
37. Laboratory Records, ORNL RC
38. ORNL Patent Office

EXTERNAL DISTRIBUTION

39. J. A. Lenhard, Office of Assistant Manager for Energy Research and Development, DOE, Oak Ridge 37831
40-41. W. H. Tabor, Environmental Safety and Health Division, DOE, Oak Ridge 37831
42-43. Technical Information Center, Oak Ridge 37831