OAK RIDGE NATIONAL LABORATORY LIBRARY
3 4456 0044396 4

ornl

ORNL/TM-9404

OAK RIDGE NATIONAL LABORATORY

MARTIN MARIETTA

Information for Seasonal Models of Carbon Fluxes in Terrestrial Biomes

A. W. King
D. L. DeAngelis

ENVIRONMENTAL SCIENCES DIVISION
Publication No. 2485

OAK RIDGE NATIONAL LABORATORY
CENTRAL RESEARCH LIBRARY
CIRCULATION SECTION
4500N ROOM 175
LIBRARY LOAN COPY
DO NOT TRANSFER TO ANOTHER PERSON
If you wish someone else to see this report, send in name with report and the library will arrange a loan.
UCN-7969 (3 9-77)

OPERATED BY
MARTIN MARIETTA ENERGY SYSTEMS, INC.
FOR THE UNITED STATES
DEPARTMENT OF ENERGY

Printed in the United States of America. Available from
National Technical Information Service
U.S. Department of Commerce
5285 Port Royal Road, Springfield, Virginia 22161
NTIS price codes—Printed Copy: A10 Microfiche A01

This report was prepared as an account of work sponsored by an agency of the United States Government. Neither the United States Government nor any agency thereof, nor any of their employees, makes any warranty, express or implied, or assumes any legal liability or responsibility for the accuracy, completeness, or usefulness of any information, apparatus, product, or process disclosed, or represents that its use would not infringe privately owned rights. Reference herein to any specific commercial product, process, or service by trade name, trademark, manufacturer, or otherwise, does not necessarily constitute or imply its endorsement, recommendation, or favoring by the United States Government or any agency thereof. The views and opinions of authors expressed herein do not necessarily state or reflect those of the United States Government or any agency thereof.

ORNL/TM-9404

ENVIRONMENTAL SCIENCES DIVISION

INFORMATION FOR SEASONAL MODELS OF CARBON FLUXES IN TERRESTRIAL BIOMES

A. W. King and D. L. DeAngelis

Environmental Sciences Division
Publication No. 2485

Date of Issue - - June 1985

Prepared for the
Carbon Dioxide Research Division
Office of Energy Research

Prepared by the
OAK RIDGE NATIONAL LABORATORY
Oak Ridge, Tennessee 37831
operated by
MARTIN MARIETTA ENERGY SYSTEMS, INC.
for the
U.S. DEPARTMENT OF ENERGY
under Contract No. DE-AC05-84OR21400

OAK RIDGE NATIONAL LABORATORY LIBRARY
3 4456 0044396 4

CONTENTS

Page

LIST OF FIGURES vii

LIST OF TABLES ix

ABSTRACT xi

INTRODUCTION 1

1. PHOTOSYNTHETIC PRODUCTION ON A SEASONAL BASIS 3

1.1 COMPARTMENT MODELS OF PRIMARY PRODUCTION 3

1.1.1 One-Compartment Models 3

1.1.2 Two-Compartment Models 4

1.1.3 Three-Compartment Models 9

1.2 EFFECT OF ENVIRONMENTAL FACTORS ON PHOTOSYNTHETIC PRODUCTION 12

1.2.1 Net Photosynthesis and Light 12

1.2.2 Net Photosynthesis and Temperature 14

1.2.3 Net Photosynthesis and CO_2 Concentration 14

1.2.4 Net Photosynthesis and Water Supply 14

1.2.5 Net Photosynthesis and Soil Nutrient Supply 17

1.2.6 Dark Respiration 17

1.3 MODELS OF CO_2 EXCHANGE 19

1.4 SEASONAL PRIMARY PRODUCTION IN ECOSYSTEM-ORIENTED MODELS 21

1.4.1 Tropical Rain Forest 21

1.4.2 Tropical Grassland and Savanna 23

1.4.3 Temperate Deciduous Forest 25

1.4.4 Temperate Grassland 28

1.4.5 Northern Coniferous Forest 32

1.4.6 Boreal Tundra 34

1.4.7 Arid Lands 37

1.5 EMPIRICAL DATA SOURCES FOR SEASONAL PRIMARY PRODUCTION 39

1.5.1 Tropical Forest 41

1.5.2 Tropical Savanna/Grassland 43

Page

1.5.3 Temperate Forest 54

1.5.4 Temperate Grassland 61

1.5.5 Boreal Coniferous Forest 69

1.5.6 Boreal Tundra 74

1.5.7 Arid Lands 80

2. LITTERFALL ON A SEASONAL BASIS 84

2.1 INTRODUCTION 84

2.2 EMPIRICAL DATA SOURCES FOR SEASONAL LITTERFALL 86

2.2.1 Tropical Forest 86

2.2.2 Tropical Savanna/Grassland 90

2.2.3 Temperate Forest 91

2.2.4 Temperate Grassland 97

2.2.5 Boreal Coniferous Forest 97

2.2.6 Boreal Tundra 98

3. DECOMPOSITION ON A SEASONAL BASIS 99

3.1 COMPARTMENT MODELS OF DECOMPOSING ORGANIC MATTER 99

3.1.1 One-Compartment Models 99

3.1.2 Two-Compartment Cascade Models 102

3.1.3 Three-Compartment Cascade Models 104

3.1.4 Multi-Layered Cascade Models 106

3.2 EFFECTS OF CLIMATIC AND SUBSTRATE FACTORS ON DECOMPOSITION 109

3.3 SEASONAL DECOMPOSITION IN ECOSYSTEM-ORIENTED MODELS 112

3.3.1 Tropical Rain Forest 112

3.3.2 Tropical Grassland and Savanna 114

3.3.3 Temperate Deciduous Forest 115

3.3.4 Temperate Grassland 116

3.3.5 Northern Coniferous Forest 118

3.3.6 Boreal Tundra 120

3.3.7 Arid Lands 122

Page

3.4 EMPIRICAL DATA SOURCES FOR SEASONAL DECOMPOSITION 124

3.4.1 Tropical Forest 124

3.4.2 Tropical Savanna/Grassland 126

3.4.3 Temperate Forest 128

3.4.4 Temperate Grassland 134

3.4.5 Boreal Forest 138

3.4.6 Boreal Tundra 138

4. APPLICATION OF DATA TO SEASONAL MODELS 140

5. CONCLUDING REMARKS 155

REFERENCES 161

LIST OF FIGURES

Figure		Page
1	A one-compartment representation of live plants in a model of photosynthetic production	5
2	A two-compartment representation of live plants in a model of photosynthetic production	6
3	A three compartment representation of live plants in a model of photosynthetic production	10
4	General response of net photosynthesis to light intensity or irradiance	13
5	General response of net photosynthesis to temperature	15
6	General response of net photosynthesis to increasing atmospheric CO_2 concentration	16
7	General response of net photosynthesis to increasing soil water stress	18
8	Results of simple one-compartment model for (a) continuous litter input, (b) pulsed input	101
9	Two-compartment decomposition model	103
10	Three-compartment decomposition model	105
11	Multi-compartment soil decomposition model	107
12	Decomposition model in which substrates of differing decay rates are considered in the first stage of decomposition	113
13	Schematic diagram of the basic system to be used as a terrestrial seasonal model	141
14	Expanded version of the model shown in Fig. 13 to take advantage of additional compartmental information if available	142

LIST OF TABLES

Table		Page
1	State variables of the seasonal model applied to the tropical rain forest ecosystem type	143
2	Fluxes of the seasonal model applied to the tropical rain forest ecosystem type	144
3	State variables of the seasonal model applied to the tropical savanna ecosystem type	145
4	Fluxes of the seasonal model applied to the tropical savanna ecosystem type	146
5	State variables of the seasonal model applied to the temperate deciduous forest ecosystem type	147
6	Fluxes of the seasonal model applied to the temperate deciduous forest ecosystem type	148
7	State variables of the seasonal model applied to the temperate grassland ecosystem type	149
8	Fluxes of the seasonal model applied to the temperate grassland ecosystem type	150
9	State variables of the seasonal model applied to the boreal coniferous forest ecosystem type	151
10	Fluxes of the seasonal model applied to the boreal coniferous forest ecosystem type	152
11	State variables of the seasonal model applied to the boreal tundra ecosystem type	153
12	Fluxes of the seasonal model applied to the boreal tundra ecosystem type	154

ABSTRACT

KING, A. W., and D. L. DeANGELIS. 1985. Information for seasonal models of carbon fluxes in terrestrial ecosystems. ORNL/TM-9404. Oak Ridge National Laboratory, Oak Ridge, Tennessee. 220 pp.

This report is a compilation of information that can be used in developing seasonal carbon flux models for several principal terrestrial biome types. The information includes flux data as well as models made either to simulate such data or to deduce fluxes not directly measurable.

The report is divided into three sections that examine (1) photosynthetic production, (2) litterfall, and (3) decomposition during a year. The sections on photosynthetic production and decomposition discuss a large number of models that relate the processes to basic abiotic variables in each of several biome types. The information on litterfall, however, is largely empirical phenology data. A fourth section demonstrates the application of this compiled information to a compartment model of seasonal carbon flux in terrestrial biomes.

INTRODUCTION

This report is meant to serve as a compact source of data and analytic approaches for constructing models of seasonal carbon fluxes in terrestrial ecosystems. Such models can aid in the understanding of the global carbon cycle. They may also be useful in studying in these ecosystems the dynamics of individual populations that are highly dependent on seasonality indirectly through primary production and litterfall.

To serve the needs of contributing information on the global carbon cycle, seasonal carbon flux data from all important regions of the earth are required. During the International Biological Programme (IBP) data were collected in numerous countries representing most of the significant terrestrial regions. These data are now largely available in IBP synthesis volumes. Supplemented with information from other literature sources, they should make possible at least a coarsely disaggregated global model of terrestrial carbon fluxes. In this report available data are lumped into seven general biome types. Further disaggregation may be possible for some of these biomes, but this will be left until later developments show that it is necessary.

Two classes of information are presented here. First, models that have already been produced to simulate particular carbon fluxes are reviewed and discussed. These compartmental models have seasonality built in through dependence of intercompartmental fluxes on abiotic factors such as soil moisture and temperature. The second class of information is empirical seasonal data. This includes data on variations in temperature and precipitation but also includes seasonal distribution of litterfall and primary production, because these may not be easily modeled mechanistically in terms of seasonal temperature and precipitation changes. Therefore, an overall carbon flux model for a biome may, for example, use a submodel for decomposition that is a mechanistic function of precipitation and temperature but may use an empirical time series for the temporal distribution of litterfall.

We make no concerted effort to review models of annual carbon flux or associated annual data which have been the objects of numerous studies, many of which have been summarized (e.g., DeAngelis, Gardner, and Shugart 1981, Cannel 1982). We are concerned here with seasonal data sets and models which are fewer in number and less frequently reviewed. However, occasional references to annual models or data are made as the need arises.

This document does not attempt to evaluate the usefulness of the available seasonal data and submodels. It is instead a "components warehouse" from which parts may be taken according to specific needs in constructing models. It will be apparent that some of the modeling components discussed, for example, some of the primary production and decomposition models, are impractical for use at present because of their great complexity. They are, nevertheless, included because they might be useful at some later time.

Finally, this report should be of use in documenting the assumptions that will go into seasonal models of the global carbon cycle. Because of the huge variety of ways of formulating such global models, and because of the widely different results that different choices of formulation can engender, precise reference material for the basic assumptions should be readily at hand.

1. PHOTOSYNTHETIC PRODUCTION ON A SEASONAL BASIS

1.1 COMPARTMENT MODELS OF PRIMARY PRODUCTION

The removal of CO_2 from the atmosphere by terrestrial biota is directly proportional to the net primary production of the autotrophs, that is, to the surplus amount of organic matter stored from photosynthetic production after respiration by autotrophs:

$$\text{Net Primary Production (NPP)} = \text{Gross Primary Production (GPP)} - \text{Respiration (R)}. \quad (1)$$

This formulation is readily translated into a compartment model. Compartmental analysis has proven to be a useful tool in studying the movement of substances in physical and biological systems. Its use in biology and medicine was effectively surveyed by Jacquez (1972). Compartmental analysis has been a central theme of ecosystem ecology, and numerous applications have been made in modeling primary production. These will be reviewed here from the perspective of incorporation into models of carbon flow in terrestrial biomes.

1.1.1 One-Compartment Models

A one-compartment representation of terrestrial primary producers is the basis for several models of carbon flux on a global scale. Gowdy, Mulholland, and Emanuel (1975) modeled a single-plant compartment with input of carbon by assimilation from the atmosphere; there were losses from the compartment to the atmosphere through plant respiration and to detritus by mortality. The time-dependent changes in the plant compartment (X_2) were represented by a constant-coefficient, donor-control model of the form

$$\frac{dX_2}{dt} = \phi_{12}X_1 - \phi_{21}X_2 - \phi_{23}X_2 \ , \quad (2)$$

where X_1 is the carbon content of the atmosphere and ϕ_{ij} is a rate coefficient of transfer directly proportional to the donor compartment X_i and independent of X_j (X_3 represents the detritus compartment; see Fig. 1). Bolin (1970) depicted a similar system but did not provide model equations.

Earlier, Eriksson and Welander (1956) presented a model with similar structure. However, in their model, the transfer rate of atmospheric carbon to assimilating plants was dependent on both the concentration of atmospheric carbon and the mass of the assimilating plants. They described the changes in their assimilating plant compartment (X_1) with the equation

$$\frac{dX_1}{dt} = K_1 X_1 Y_a - K_1' X_1 - K_2 X_1 \ , \qquad (3)$$

where Y_a is the carbon content of the atmosphere, K_1 is the assimilation rate coefficient, K_1' is the rate coefficient for transfer of live plant material to dead organic matter, and K_2 is the rate coefficient for respiration. Craig (1957), Bolin and Eriksson (1959), and Keeling (1973) have also represented live plants with a single compartment.

1.1.2 Two-Compartment Models

Other authors have suggested that live terrestrial plants might best be represented by two compartments, one with a relatively fast turnover of carbon, the other with a slow turnover. These fast and slow compartments might represent annual and perennial plants, respectively, or leaves and wood, or a combination of the two. For example, Keeling (1973) presented a model with a long-lived land biota compartment, N_b, and a short-lived land biota compartment, N_e (Fig. 2a). Fluxes to and from these two compartments were qualitatively similar. Input was through assimilation or photosynthesis; output was by way of autotrophic respiration and transfer to dead organic matter. According to Keeling (1973),

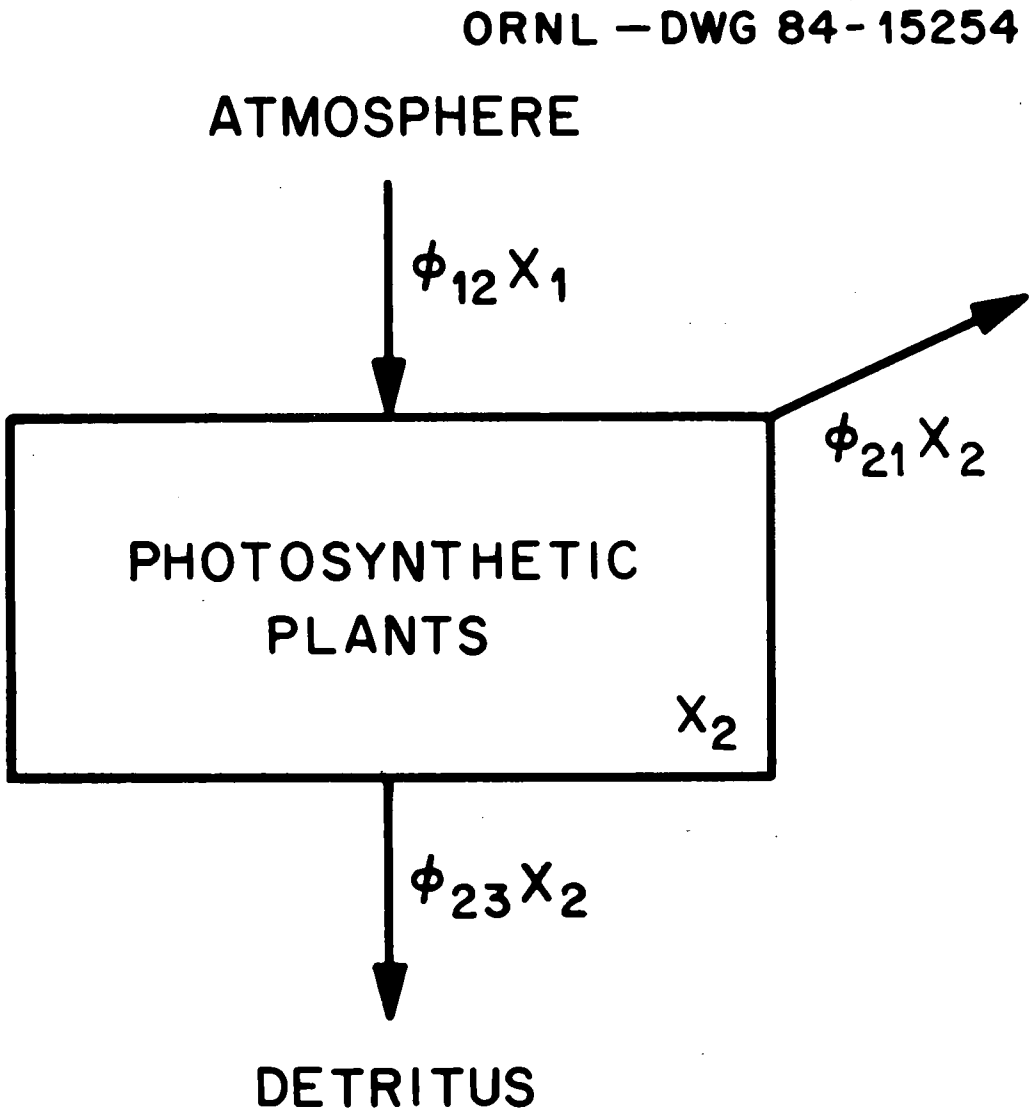

Fig. 1. A one-compartment representation of live plants in a model of photosynthetic production. Symbols as in Eq. (2).

ORNL—DWG 84-15255

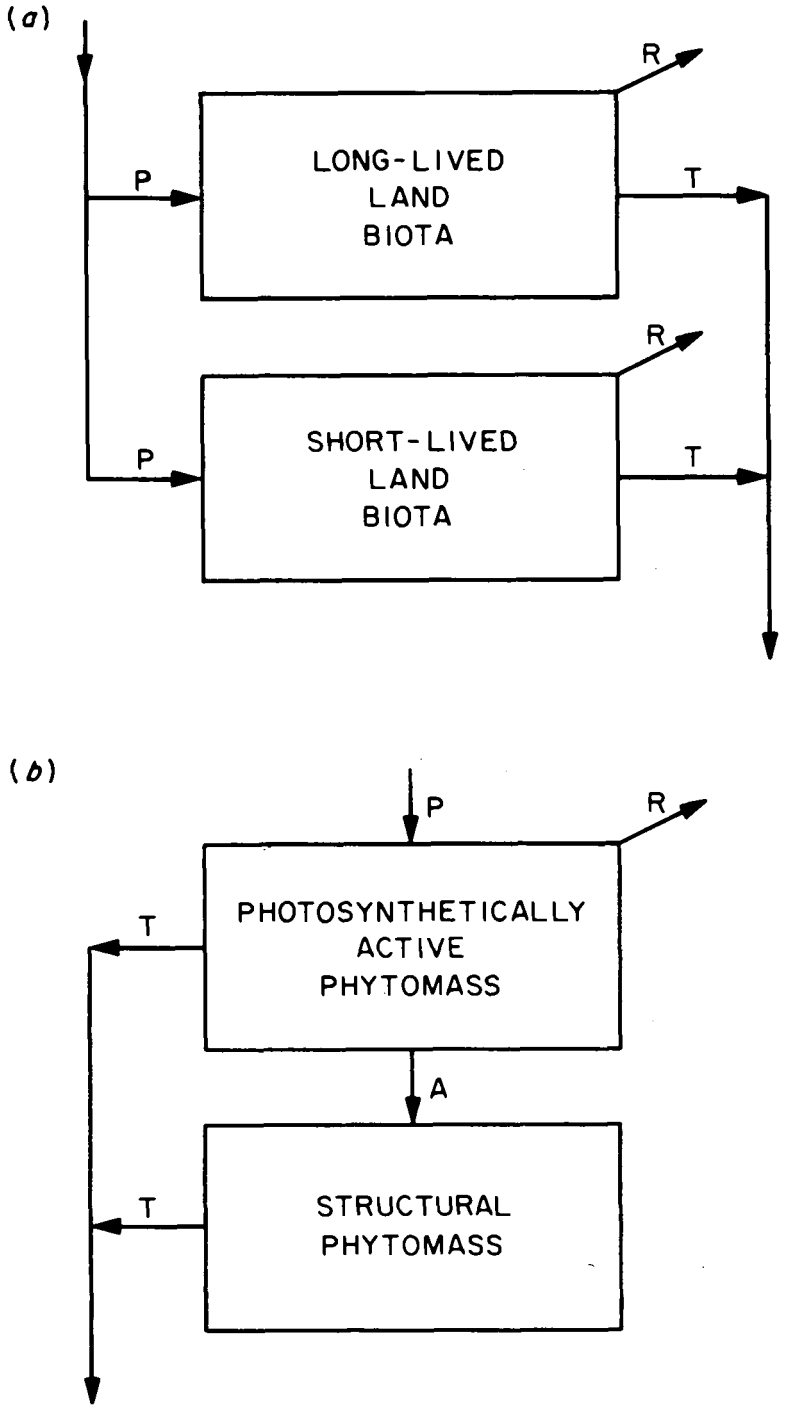

Fig. 2. (a) A two-compartment representation of live plants in a model of photosynthetic production (e.g., Keeling 1973). P's represent photosynthesis, R's respiration, and T's transfer to dead material. (b) A two-compartment representation of live plants in a model of photosynthetic production (e.g., Bolin et. al. 1981). P represents photosynthesis, R respiration, T's transfer to dead material, and A photosynthate allocation.

the rate of CO_2 uptake by photosynthesis was a function of the concentration of atmospheric carbon (i.e., CO_2), N_a, the amount of photosynthesizing material, and these values in the preindustrial state. He proposed the expression

$$F_{ab} = F_{ab0} + \Delta F_{ab} = F_{ab0}(N_a/N_{a0})^{1/2}(N_b/N_{b0}) \quad , \tag{4a}$$

rewritten as

$$F_{ab} = F_{ab0}(N_a/N_{a0})^{B_a}(N_b/N_{b0})^{B_b'} \quad , \tag{4b}$$

where F_{ab} is the photosynthetic rate, N_a is the amount of carbon in the atmosphere, and N_b is the amount of carbon in the long-lived plants. The subscript 0 appended to any of these represents the preindustrial state. The B_a and B_b' are biota growth factors for the effect of atmospheric carbon concentration and biotic carbon concentration, respectively. A similar formulation expressed the rate of autotrophic respiration (F_{ba}) as a function of the preindustrial photosynthetic rate and pre- and postindustrial plant carbon.

Bacastow and Keeling (1973) utilized a two-compartment representation of terrestrial plants where the long-lived compartment represented wood or structural phytomass and the short-lived compartment represented leaf or assimilating phytomass (see Fig. 2b). They presented the following formulations for photosynthesis (F_{ab}) and respiration (F_{ba}) rates for the long-lived biota:

$$F_{ab} = F_{ab0}\left(1 + B_a \ln\left[\frac{N_a}{N_{a0}}\right]\right) \frac{N_b}{N_{b0}} \quad , \tag{5}$$

$$F_{ba} = F_{ba0} \frac{N_b}{N_{b0}} \quad , \tag{6}$$

where the terms are as in Eq. (4). These functions are similar to those of Keeling (1973) but lack the growth factor term (B_b').

The equation given for the respiration rate of short-lived plants was very similar to that for long-lived plants [Eq. (6)]. However, the equation for the rate of photosynthesis in short-lived plants was modified from that for long-lived plants and presented as

$$F_{ae} = F_{ae0}(1 + B_a \ln\left[\frac{N_a}{N_{a0}}\right])\frac{N_b}{N_{b0}} \quad , \tag{7}$$

where F_{ae} is the present photosynthetic rate, F_{ae0} is the preindustrial photosynthetic rate, and the other terms are as in Eq. (5). According to Bacastow and Keeling (1973), the photosynthetic rate of short-lived plants is proportional to the carbon mass of long-lived plants [hence the N_b/N_{b0} factor in Eq. (7)] because well over half of the short-lived biota growth is associated with long-lived growth.

Machta (1971) also utilized rapid and slow compartments to represent living land plants, and Bolin et al. (1981), in suggesting a structural framework for modeling carbon flux in a biome, included a compartment representing assimilating parts and a compartment representing structural parts of the biota (Fig. 2b). They included a flux from assimilating parts to structural parts (i.e., photosynthate translocation) not modeled by Keeling (1973) or Bacastow and Keeling (1973); however, they did not include respiratory flux from the structural component. Following Keeling (1973), Bolin et al. (1981) represented, very generally, the rate of photosynthesis of land plants as

$$F_{ab} = g_1(N_a) \bullet g_2(N_b) \tag{8}$$

and the rate of respiration by

$$F_{ba} = h_1(N_a) \bullet h_2(N_b) \quad , \tag{9}$$

where N_a is the amount of carbon in the atmosphere, N_b is the amount of carbon in the plants, g_1 and h_1 are rate coefficients for

the effect of atmospheric carbon on photosynthesis and respiration, respectively, and g_2 and h_2 are similar coefficients for the effect of biotic carbon. Bolin et al. (1981) did not develop these equations further and did not present quantitative representations of the other fluxes.

1.1.3 Three-Compartment Models

Emanuel, Killough, and Olson (1981), in presenting a general model structure for circulation of carbon in the earth's terrestrial ecosystems, included a non-woody component of trees (i.e., photosynthesizing parts) and a woody component (i.e., structural parts). They also included a third component of the terrestrial biota, a ground vegetation compartment. Woody and non-woody components were not defined for the ground vegetation. The authors considered ground vegetation to consist of any non-tree live vegetation. They further assigned the total vegetation carbon in forest ecosystems to the tree reservoir and all carbon in non-forest ecosystems to the ground vegetation reservoir (see Fig. 3).

Emanuel, Killough, and Olson (1981) represented flux (translocation) from non-woody to woody parts but unlike Bolin et al. (1981) included respiration by the woody parts. Linear first-order differential equations were used to express material balance for the compartments, with the assumption that the fluxes were proportional to the standing crops of carbon in the donor compartments. The change in the non-woody parts of trees was given by

$$\frac{dN_2}{dt} = -aN_2 + F_{12} \quad , \tag{10}$$

where N_2 is the standing crop of carbon in the non-woody component and a is a rate coefficient representing losses through respiration, mortality, and translocation of photosynthate; F_{12} is an input of

ORNL — DWG 84-15256

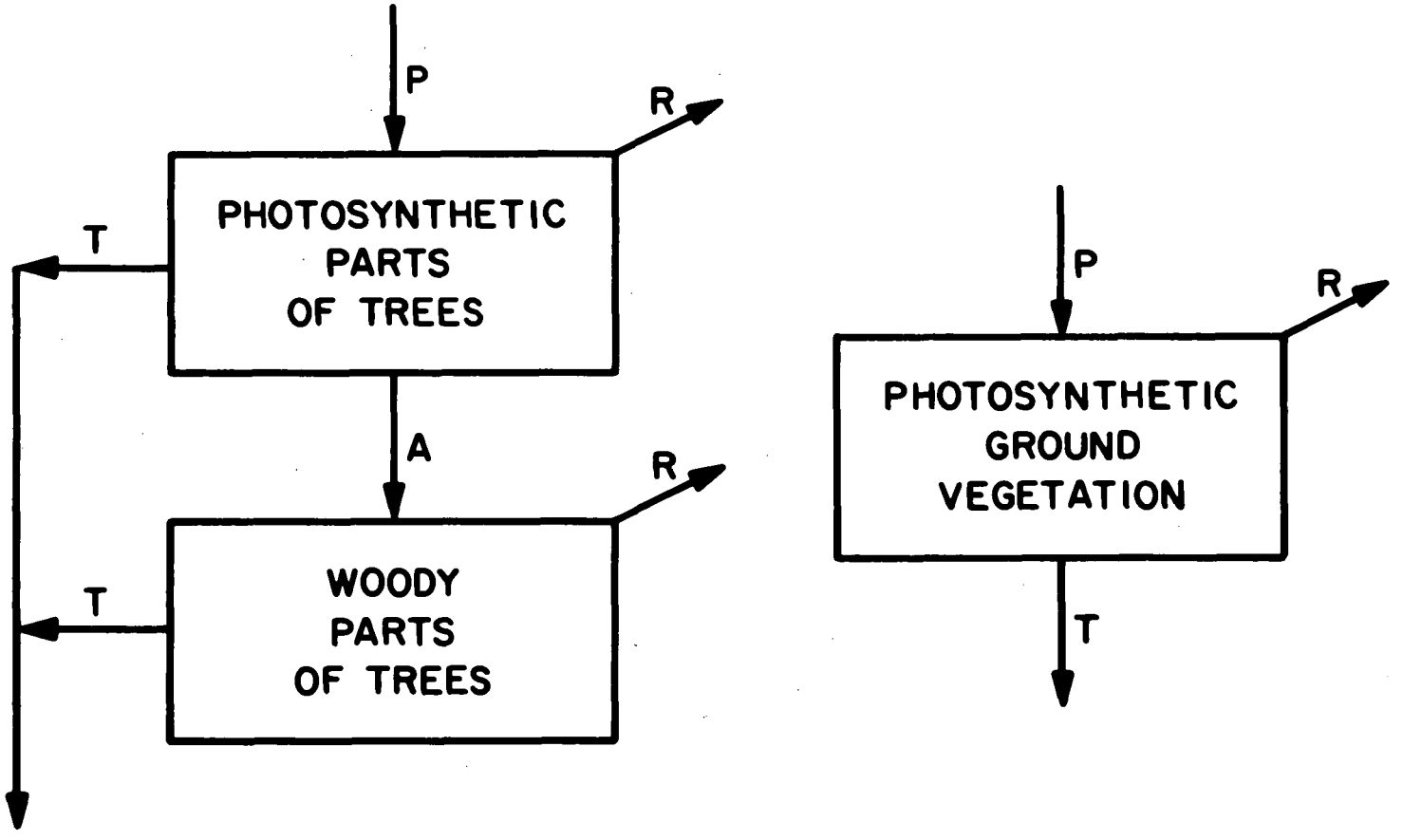

Fig. 3. A three compartment representation of live plants in a model of photosynthetic production (e.g., Emanuel et al. 1981). Symbols representing carbon fluxes are as in Fig. 2a,b.

carbon corresponding to gross primary production. The change in the woody parts of trees was given by

$$\frac{dN_3}{dt} = bN_2 - cN_3 \quad , \tag{11}$$

where N_3 is the standing crop of carbon in the woody components, b is a rate coefficient representing input of photosynthate from the non-woody compartment, and c is a rate coefficient representing losses through respiration and mortality. The changes in the ground vegetation compartment were modeled by

$$\frac{dN_4}{dt} = -dN_4 + F_{14} \quad , \tag{12}$$

where N_4 is the standing crop of carbon in the ground vegetation, d is a rate coefficient representing losses through respiration and mortality, and F_{14} is an input of carbon corresponding to gross primary production. Emanuel et al. (1984) incorporated this model of terrestrial carbon flux into a global model involving land-use changes.

None of these models are seasonal in themselves, and they were not originally presented as such. However, they might be modified to model seasonal dynamics by introducing time-dependent parameters in the intercompartmental fluxes or by incorporating seasonal data on the size of the compartments or state variables. While perhaps possible, this approach may not be as attractive, or rewarding, as the use of process-oriented models with fluxes explicitly dependent on seasonally variable abiotic factors, particularly since complex functional relationships for carbon fluxes in compartmental models can lead to significantly different system responses than those predicted by simple flux models (Rodhe and Bjorkstrom 1979). With these considerations in mind, in the next three sections we briefly review (1) the effects of abiotic, perhaps seasonally varying, factors on photosynthetic production; (2) a class of process-oriented models of photosynthetic production; and (3) seasonal or pseudo-seasonal models already

developed for specific biome types which, to varying degrees, have seasonality built in through dependence of intercompartmental fluxes on abiotic factors affecting primary production. In general, these models are multicompartment submodels of primary production developed as part of larger ecosystem models.

1.2 EFFECT OF ENVIRONMENTAL FACTORS ON PHOTOSYNTHETIC PRODUCTION

Larcher (1969, 1975) reviewed the influence of external factors on CO_2 exchange in plants. We make no attempt to duplicate such a review. Instead, we present a brief summary of the general trends in the response patterns of CO_2 exchange in plants to four major environmental variables: irradiation, temperature, carbon dioxide supply, and water relations. These variables were selected not only because of their important influence on photosynthesis and respiration but also because they represent variables for which seasonal field data are likely to be available. They are also variables that are likely to be affected by changes in land use. A fifth variable (or set of variables), soil nutrient supply, is also discussed.

1.2.1 Net Photosynthesis and Light

Because it is a photochemical process, photosynthesis is directly affected by solar radiation. Numerous laboratory investigations with a number of different plant species (see Larcher 1975) suggest that, in general, CO_2 uptake first increases proportionally with increased light intensity and then increases more slowly to a maximum value (Fig. 4). Plant species that fix CO_2 using the C_4 dicarboxylic acid pathway, the C_4 plants, are possible exceptions to this general pattern. The C_4 plants often do not appear to be light-saturated even at high light intensities (Larcher 1975). Because many of the grasses are C_4 plants and the C_4 metabolic pathway may be an adaptation to hot and dry conditions, models of photosynthetic production in some grasslands or arid systems may differ from more general models. Another similar consideration is possible differences in the light response curve of sun and shade leaves (Larcher 1975).

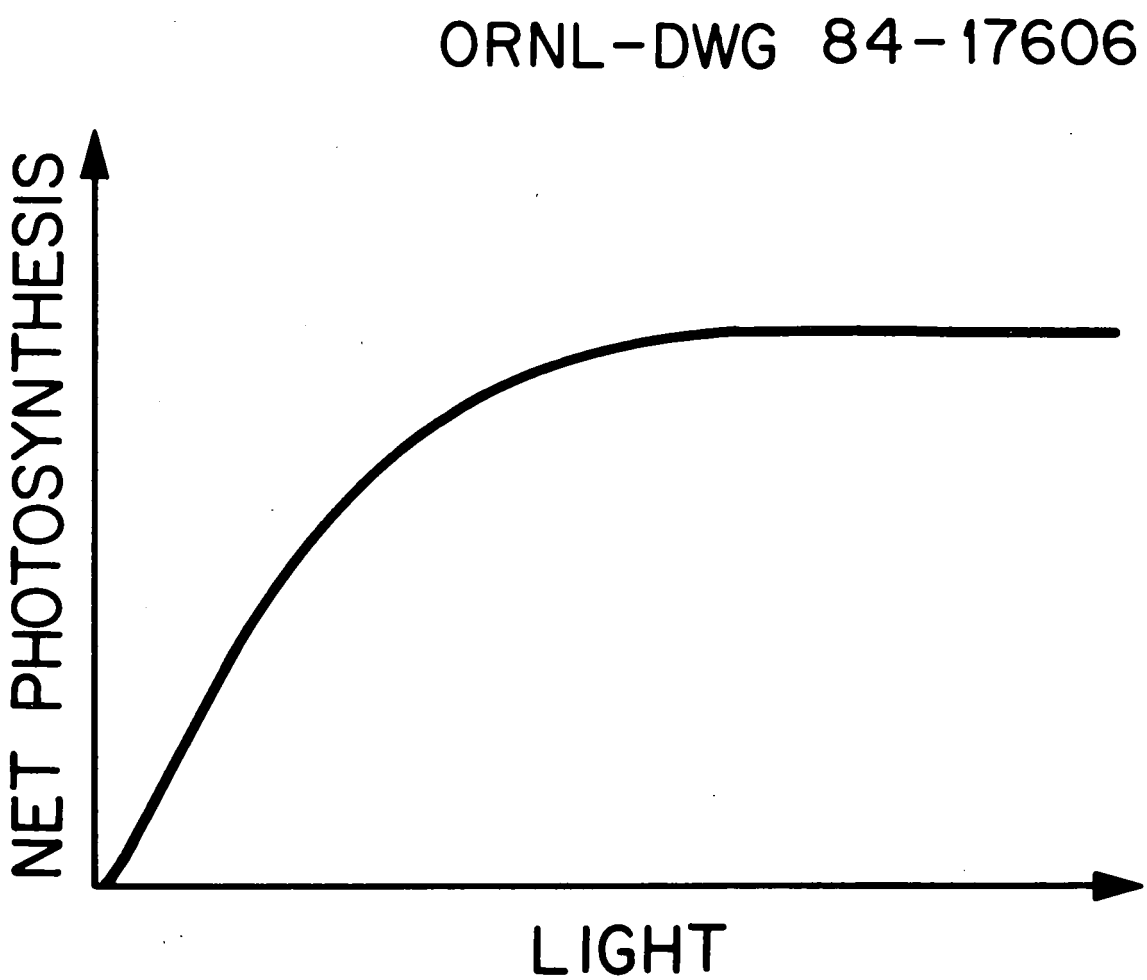

Fig. 4. General response of net photosynthesis to light intensity or irradiance.

1.2.2 Net Photosynthesis and Temperature

The general response of net photosynthesis to temperature is primarily the result of the influence of temperature on the activity of various enzymes involved in the photosynthesis (Fig. 5). As temperature increases beyond some minimal point, the uptake of CO_2 increases proportionally to a peak. At higher temperatures enzyme inactivation causes a rapid drop in photosynthetic activity. While the critical point (i.e., optimum temperature) in a plant's photosynthesis-temperature response curve is somewhat dependent on the species or type of plant involved (e.g., herbaceous versus woody), other factors such as age, season, and plant origin also have an effect (Larcher 1969, 1975).

1.2.3 Net Photosynthesis and CO_2 Concentration

Plants are capable of using larger amounts of CO_2 than are usually available at normal atmospheric concentrations. Hence, net photosynthesis generally increases with increased CO_2 concentration (Fig. 6) (Larcher 1969, Rogers et al. 1982). It is this response to atmospheric CO_2 concentration that is incorporated in many of the global carbon models (see Sect. 1.1). However, net photosynthesis does not increase indefinitely with increased CO_2, but slows appreciably as a maximum rate of CO_2 uptake is approached. The resulting curve (Fig. 6) is of the same form as that for net photosynthesis and light. There is also evidence that C_4 plants may respond differently to increased CO_2 concentration than do C_3 plants (Zelitch 1969, Rogers et al. 1982).

1.2.4 Net Photosynthesis and Water Supply

Water affects CO_2 exchange primarily through its role in maintaining high protoplasm turgidity, particularly in turgor-related stomatal pore size (Larcher 1969, 1975). As water supply is reduced, water stress increases, stomatal pore size is reduced, and

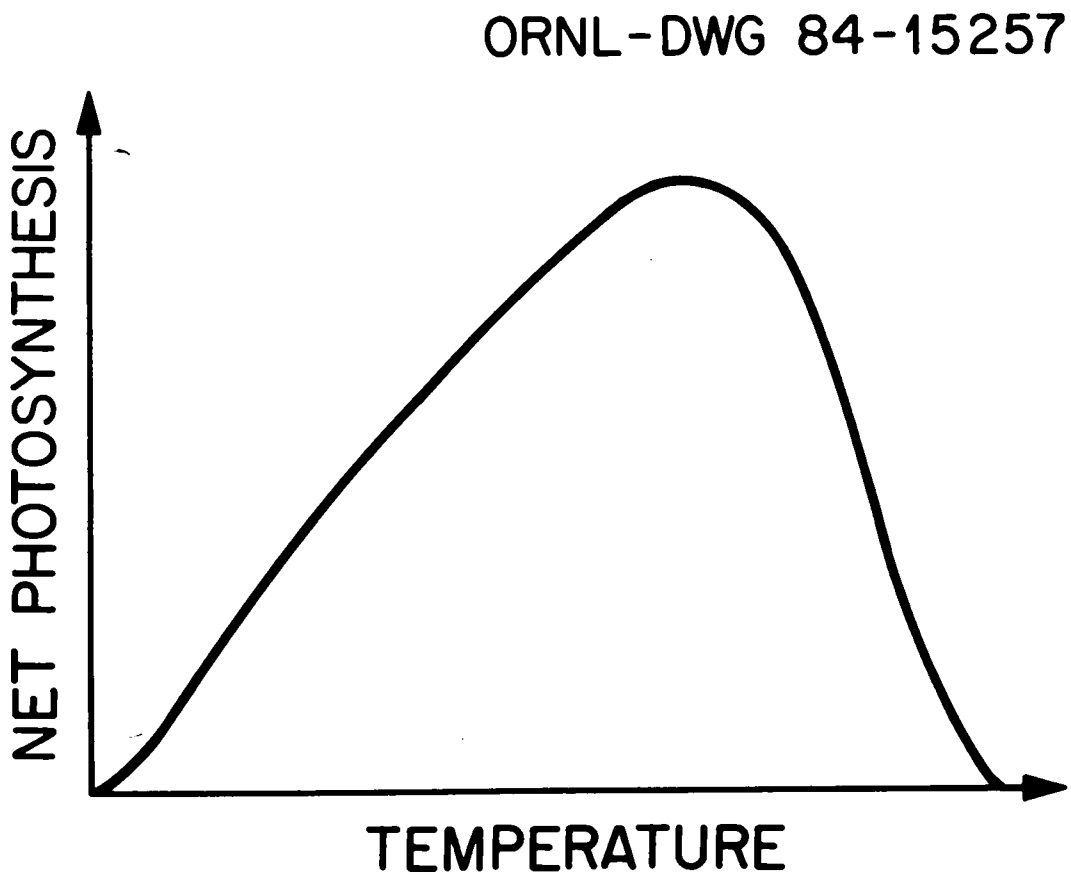

Fig. 5. General response of net photosynthesis to temperature.

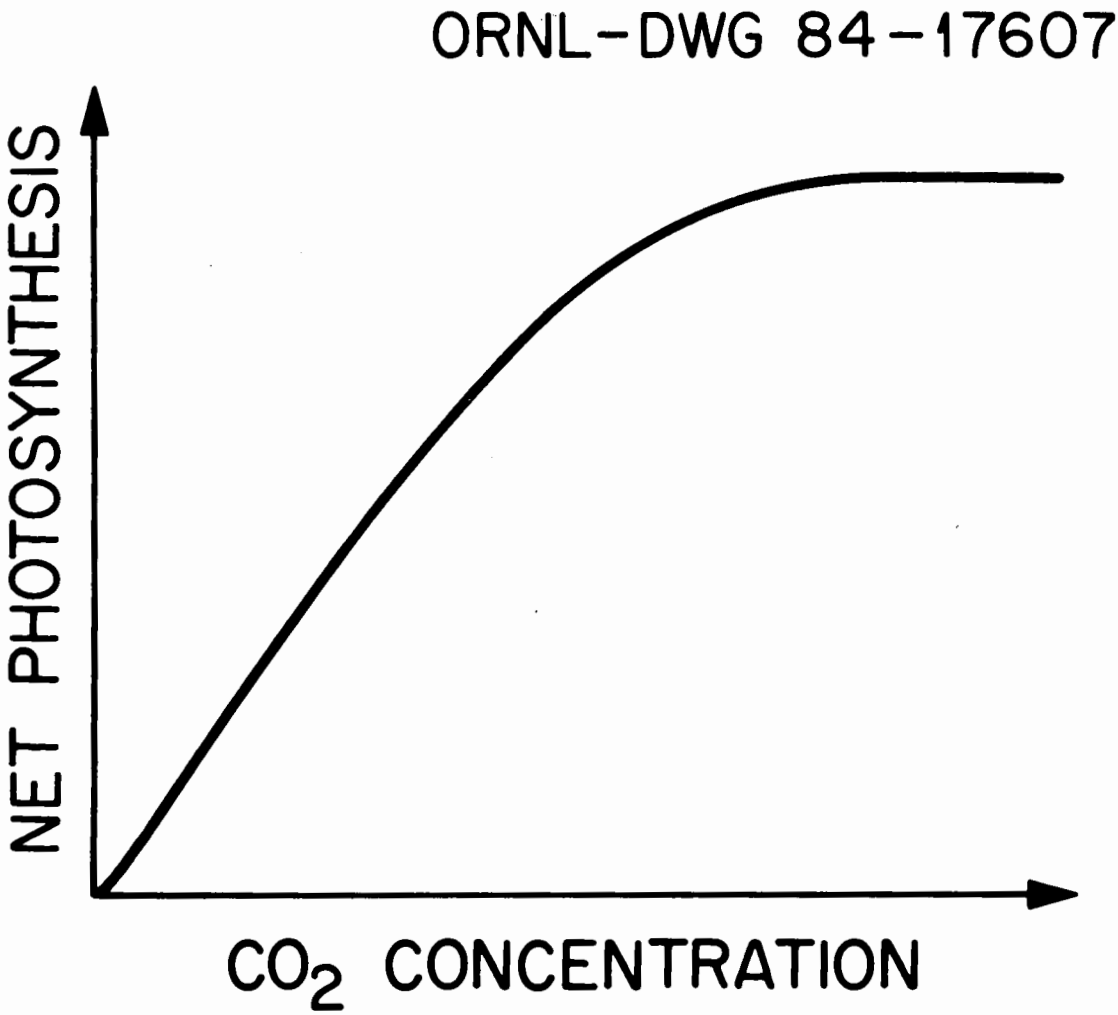

Fig. 6. General response of net photosynthesis to increasing atmospheric CO_2 concentration.

photosynthetic capacity is reduced (Fig. 7). The CO_2 gas exchange response to water supply varies from species to species, and it may also be affected by age and soil moisture preconditioning (Larcher 1969, 1975). There is also evidence, at least for trees, that oversaturation with water may reduce net CO_2 uptake because of stimulated respiration (Larcher 1969).

1.2.5 Net Photosynthesis and Soil Nutrient Supply

In normal soils without serious deficiencies in specific nutrients, the availability of mineral nutrients is relatively less critical as a limiting factor for CO_2 uptake than are climatic factors. Even so, artificial provision of nutrients will usually enhance photosynthetic capacity. Larcher (1969, 1975), Keller (1971, reported in Larcher 1975), and Lugg and Sinclair (1981) have shown that net photosynthesis increases linearly with increased nitrogen content. In an extensive review, Natr (1972) concluded that generalities concerning the influence of mineral nutrients on photosynthesis were difficult to find and that much more work was needed. Relatively few models of photosynthesis involve mineral nutrient supply. Those that do (e.g., Sauer 1978) usually consider nitrogen and perhaps phosphorus.

1.2.6 Dark Respiration

Dark respiration, releasing CO_2 fixed via photosynthesis, as a biochemical process is influenced primarily by temperature. As temperature rises, dark respiration increases exponentially. Moreover, the Q_{10} temperature coefficients vary with temperature (Larcher 1975). Between 5 and 20°C dark respiration increases with a Q_{10} of 2. Above 20°C the Q_{10} falls slowly at 1.5; below 5°C the Q_{10} coefficient is greater than 2. Other factors that might also affect respiration are water supply and mineral nutrients (Larcher 1969, 1975). Soil temperature and water content are obviously important in determining root respiration in particular.

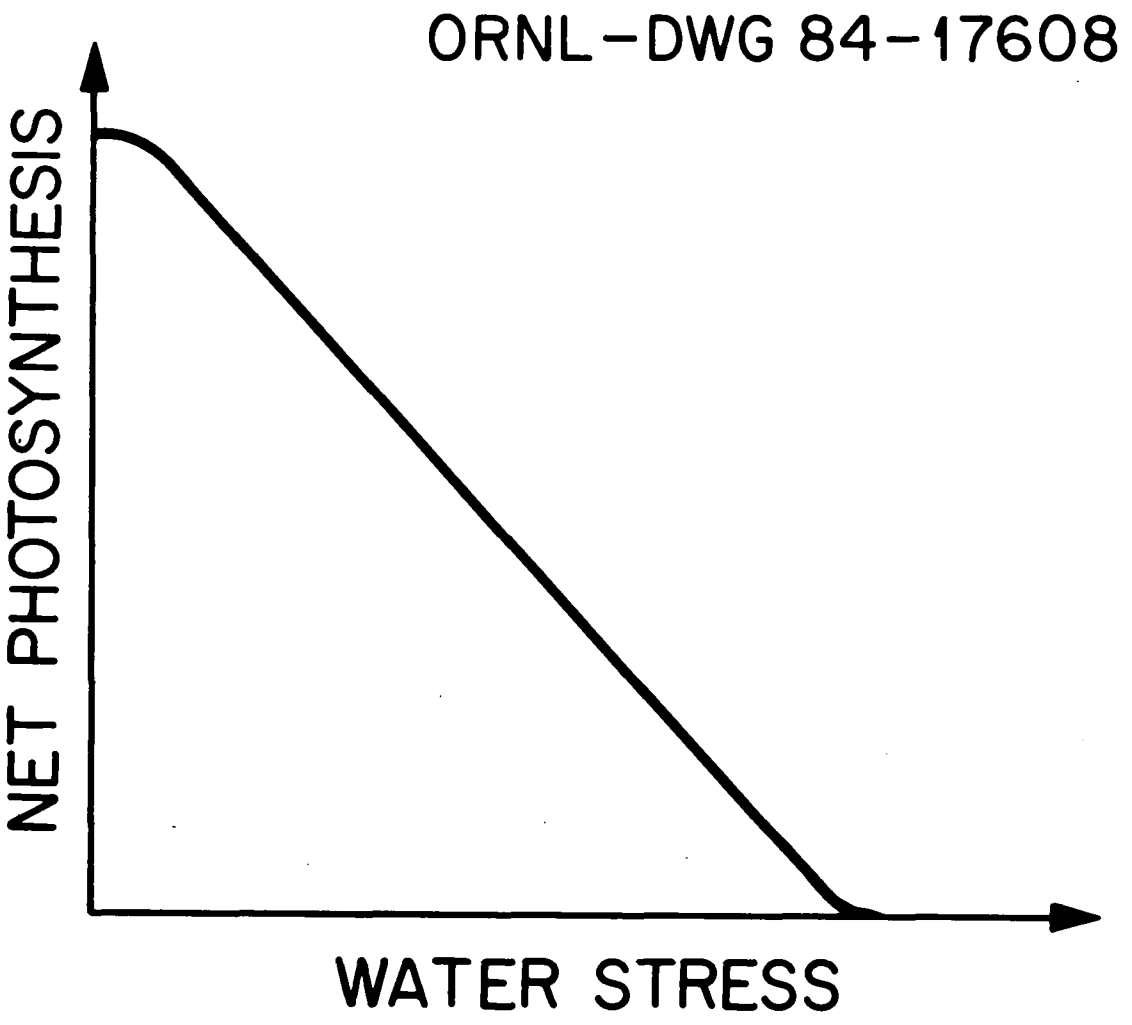

Fig. 7. General response of net photosynthesis to increasing soil water stress.

1.3 MODELS OF CO_2 EXCHANGE

Models of CO_2 exchange in autotrophs that involve the effects of the major environmental variables can be conveniently divided into two main types. The first of these, the leaf models, describe processes and involve parameters at the level of the individual leaf. They tend to be physiologically oriented, dealing with such factors as mesophyll resistance, carboxylation sites, gas diffusion, stomatal control, and other cellular processes (Brown 1969, Chartier 1970, Laisk 1970, Hall 1971, Lommen et al. 1971, DeMichele and Sharpe 1972, Chartier and Prioul 1976, Sinclair, Goudriaan, and de Wit 1977, Ondok and Glosser 1978, Sinclair and Rand 1979, Bell 1982). Most of these models involve variables not easily estimated from biome-oriented data sets. One of the more promising leaf models (with respect to application in seasonal carbon cycle models) is one presented by Reed et al. (1976) and designed to relate the main features of the environment (i.e., irradiance, temperature, ambient CO_2 concentration, and stomatal conductance) to the rate of net photosynthesis at the level measured by infrared gas analysis techniques. Even this field-oriented model contains quantities not readily available from independent field data sets (e.g., stomatal conductance) and requires estimation of ten parameters.

The second set of models relating CO_2 exchange in plants to environmental variables are the canopy models (see review by Monsi, Uchijima, and Oikawa 1973). Following the lead of Monsi and Saeki (1953), a number of models have been presented, and modified, that relate environmental variables and canopy structure to photosynthesis at the entire canopy level. Many of the canopy photosynthesis models are based on light interception theory (Monsi and Saeki 1953, Monteith 1965, de Wit 1965, Duncan et al. 1967, Tooming 1967, Stewart and Lemon 1969, Connor and Cartledge 1970, Stewart 1970, Hodanova 1979, and see references cited in Monsi, Uchijima, and Oikawa 1973), sometimes with considerable detail (e.g., Allen, Stewart, and Lemon 1974, Sinclair, Murphy, and Knoerr 1976, O'Rourke and Terjung 1981). Other models are based on CO_2 transfer theory (see Monsi, Uchijima, and Oikawa 1973).

These latter models are particularly interesting because they have been used to simulate the influence of artificial CO_2 enrichment on canopy photosynthesis (Uchijima and Inoue 1970, Duncan and Barfield 1970, Allen, Jensen, and Lemon 1971). Simulations suggest that artificial CO_2 enrichment does not affect canopy photosynthesis very much when air mixing is strong because most of the enriched CO_2 is lost by transfer into the surface air layer (Monsi, Uchijima, and Oikawa 1973)--this despite the physiological response of photosynthesis to enriched CO_2 levels outlined in Sect. 1.2.3.

Present canopy models may be important to later attempts at modeling seasonal carbon cycles on the biome or ecosystem level for three reasons: (a) the scale of the phenomenon they attempt to simulate (canopy photosynthesis) is a step closer to the whole ecosystem than is leaf work; (b) despite the detailed variables in many of the models, canopy models have been tested with and applied to crop systems (e.g., Stewart and Lemon 1969, Stewart 1970, Connor and Cartledge 1970, Lemon, Stewart, and Shawcroft 1971, Shawcroft 1970, 1971, Curry 1972, Shawcroft, Lemon, and Stewart 1973, Shawcroft et al. 1974, Hodanova 1979), forests (e.g., Kira et al. 1964, Kira, Shinozaki, and Hozumi 1969, Hozumi, Yoda, and Kira 1969, Hozumi, Kirita and Nishioka 1972, Connor, Tunstall, and van den Driesche 1971, Allen, Stewart, and Lemon 1974) and grasslands (Connor, Brown, and Trlica 1974); and (c) some of these models deal with seasonal changes in photosynthesis. Connor, Tunstall, and van den Driesche (1971) applied the canopy model of Connor (1970) and Connor and Cartledge (1970, 1971) and found that basic laboratory functions provided reasonable predictions of seasonal, daily canopy photosynthesis in a brigalow forest. Hozumi, Kirita, and Nishioka (1972) applied the canopy model of Monsi and Saeki (1953) to a warm, temperate evergreen-oak forest and concluded that seasonal changes in solar radiation were mainly responsible for seasonal trends in gross canopy photosynthesis. Trends in canopy respiration were attributed mainly to seasonal changes in temperature.

In addition to the leaf and canopy models of photosynthesis, there are models that attempt to relate the two model forms by looking at photosynthesis on both the leaf and canopy level (Angus and Wilson 1976, Ondok and Glosser 1978). At least one of these (Ondok and Glosser 1978) provided seasonal estimates. There are also a few models of photosynthesis at the whole plant level that involve environmental variables (Connor, Brown, and Trlica 1974, Enoch and Sacks 1978). Most models of photosynthetic production at the whole plant level relate environmental variables to dry matter production rather than to CO_2 exchange per se (e.g., Monsi 1960, Curry 1971, Curry and Chen 1971, Barnes 1972, Brockington and Ryle 1972, Curry 1972, Perry 1972, Promnitz 1975, Wann, Raper, and Lucas 1978). Production, as defined by Larcher (1969), is the accumulation of organic matter expressed in dry matter or energy units per unit area of ground surface. Almost by definition, production rates are concerned with plant stands, plant communities, or ecosystems rather than with the single plant or plant parts. Generally it is production rather than direct CO_2 exchange that is the focus of attention in models or submodels at the ecosystem or biome levels. The next section presents an overview of those models.

1.4 SEASONAL PRIMARY PRODUCTION IN ECOSYSTEM-ORIENTED MODELS

1.4.1 Tropical Rain Forest

Bandhu et al. (1973) presented a seasonal model of a Malaysian rain forest as part of a workshop on modeling forest ecosystems (Reichle et al. 1973b). The model involved ten compartments, six of which were primary producer components: leaves, branches, boles, roots, flowers and fruits, and ground cover. Photosynthesis was represented by a forcing function applied to the leaf and ground cover compartments. The forcing related primary production to rainfall and time and was of the form

$$^{1}Z_{1} = 7.51\ P_{1} \quad (i = 1,2,\ldots,10) \quad , \tag{13a}$$

where P_i is the rainfall in a given i_{th} time period (1/10th of a year). When this function seemed to result in severe oscillations in the leaf compartment, the Z_1 was modified to

$$^2Z_1 = 7.51(P_i/2) + 7.51(P_i/20) = 4.13P_i \qquad (13b)$$

to reduce the amplitude of the oscillations. Equation (13b) reduced the amplitude of the forcing function, while at the same time the area under the curve remained the same without altering the integrated forcing function of $^2Z_1 = {}^1Z_1$.

The respiration functions in the Bandhu et al. model were simple linear constant coefficient terms, as were most of the photosynthate allocation fluxes. However, the loss of leaves to litter and the translocation of photosynthate from branches to leaves were felt to be inversely related to rainfall. The flux to leaves from branches was represented by

$$a_{21} = 0.022794 + (a/Z_1) \quad , \qquad (14)$$

where a is the product of Z_1 [the photosynthesis forcing function, Eq. (13)] at its minimum and the appropriate rate constant from the constant coefficient model (the starting point for the seasonal model). The function [Eq. (14)], however, was not actually used in the implementation of the model, and a_{12} (as well as a_{18}, the flux from leaves to litter) was incorporated as a rate constant. As a result, the model differed from a constant coefficient model only in the seasonal forcing [Eq. (13)].

Odum (1970) presented several energy circuit diagrams for the El Verde, Puerto Rico, tropical rain forest. One of these (p. I-192) depicted primary producers as a system of six compartments: leaves, fruit, branches, boles, small roots, and large roots (as analyzed by Ovington and Olson 1970). Photosynthate was transferred by vascular flow from leaves to other compartments, and respiration was represented for each of the six compartments. Although it is not explicitly seasonal, the graphical model might be modified to represent seasonal

dynamics. Additionally, Odum (1970) presented numerous tabulations of data on leaf area, chlorophyll A, leaf biomass, photosynthesis, respiration, and organic energy flows that might be useful in developing seasonal models. The data were collected at various times throughout the year, but they do not generally represent continuous seasonal series. A possible exception is the data set representing monthly estimates of biomass estimated using optical density relations (Odum et al. 1963, Odum 1970). Odum (1970) also discussed application of the Monsi and Saeki (1953) canopy photosynthesis model to the El Verde rain forest. Others (Kira et al. 1967, Hozumi, Yoda, and Kira 1969, Allen and Lemon 1974, Allen, Stewart, and Lemon 1974) have also applied canopy photosynthesis models to rain forests.

Perhaps because of the apparent aseasonality of tropical rain forests, estimates of production parameters are not often broken down by season. However, likely sources of otherwise useful data include Ogawa et al. (1965), Yoda et al. (1965), Yoda (1967), Lugo (1970), Odum and Jordan (1970), Lemon, Allen, and Muller (1970), Stephens and Waggoner (1970), Odum and Pigeon (1970), Allen, Lemon, and Muller (1972), Williams, Loomis, and De T. Alvin (1972), Hozumi et al. (1969), Kira and Shidei (1967), Kira et al. (1964), and Brown and Lugo (1982).

1.4.2 Tropical Grassland and Savanna

Tropical grasslands and savannas have perhaps not received as much attention from ecosystem modelers as several other terrestrial biome types have (this appears to be the case for tropical systems in general). One of the most complete attempts at a tropical grassland production model is that of Krishnamurthy (1978), who presented a seasonal linear compartment model of semi-arid grazing lands in India. The live plants were divided into aboveground and belowground biomass compartments. The flux of dry matter through those compartments was described by the difference equations

$$X_1(t + \Delta t) = X_1 + [a_{90,1} - (a_{12} + a_{14})X_1]\Delta t \qquad (15)$$

and

$$X_4(t + \Delta t) = X_4 + (a_{14}X_1 - a_{45}X_4)\Delta t \quad , \tag{16}$$

where X_1 and X_4 are the quantity of biomass at time t for aboveground and belowground, respectively; $a_{90,1}$ is a total net production forcing; a_{12} is a time-varying transfer coefficient for the loss of biomass to standing dead; a_{14} is a time-varying transfer coefficient for the flow from aboveground to belowground; a_{45} is a time-varying transfer coefficient for root decomposition; and Δt is the time interval.

Respiration terms were absent from the model, and photosynthesis was not modeled directly. Krishnamurthy's (1978) model is a modification of Singh's (1973) tropical grassland model that utilized differential equations rather than difference equations. His model also lacked respiration terms and direct representation of photosynthesis.

Cornet (1981), in describing herbaceous biomass and production in Senegal grasslands, developed a simple seasonal model of net aerial primary production (NAPP) of the form

$$NAPP = b_i - b_0 + a_i \quad , \tag{17}$$

where b_i is the biomass at time i, b_0 is the biomass at time 0, and a_i is the loss at time i based on decomposition rates. Production was determined indirectly by determining directly the disappearance rate of dead material (after Olson 1963b). This model is limited with respect to the application considered here since it does not consider either carbon assimilation or loss to the atmosphere.

Coughenour, McNaughton, and Wallace (1984) united morphometric traits with physiological processes in a simulation model of perennial graminoids of the Serengeti Plain, eastern Africa. Their carbon submodel divided the grasses into six compartments: reserve carbohydrates, culmless shoots, vegetative culms, reproductive culms,

structural crowns, and structural roots. Shoot photosynthesis and respiration, roots-plus-crowns respiration, and translocation of carbon were modeled. However, these processes were dependent upon intrinsic factors such as carbon content and carbon:nitrogen ratios rather than extrinsic, seasonally variable, abiotic factors such as temperature or soil moisture. The authors considered their formulation to be a model of growth in a nonrestrictive environment, and it was presented as a prelude to modeling "more realistic situations" (Coughenour, McNaughton, and Wallace 1984) involving environmental limitations.

Parton and Singh (1984) have applied the shortgrass prairie model of Detling et al. (1979) to the tropical grasslands of Kurukshetra, India (described by Singh and Yadava 1974). They found that the model did a reasonable job of simulating seasonal biomass dynamics without any structural changes although some parameter modifications were called for. Similar applications of other temperate grassland models may be useful until the shortage of environmentally oriented tropical grassland/savanna models is alleviated.

1.4.3 Temperate Deciduous Forest

One of the best-documented models of seasonal photosynthetic production in the temperate deciduous forest biome type is that of Sollins, Reichle, and Olson (1973) (also see Sollins, Harris, and Edwards 1976). This process-oriented model of forest dynamics, developed for a southern Appalachian *Liriodendron* forest, considers trees in three classes: shade-intolerant overstory, shade-tolerant overstory, and understory. Each of these subsystems is divided into five storage compartments: leaves, buds, active tissues, inactive woody tissues, and fine roots. The transfer of organic matter among these compartments involves functions of environmental variables such as temperature and solar radiation.

Seasonality was introduced through temperature-dependent functions and tree phenology. For example, gross photosynthesis was modeled following the canopy photosynthesis approach of Monsi and Saeki (1953),

which involves the interaction of irradiance and canopy structure. Gross photosynthesis in the dominant tulip poplar subsystem (G_A) was given by the equation

$$G = \left[\frac{Q_A^* + A_{13}}{A_{13} + 0.005}\right]\left[\frac{-3.914\ B_1}{A_1 K_1}\right]\left[\frac{Q_1}{Q_1 + Q_5}\right] \ln \left[\frac{1 + A_1 E_1}{1 + A_1 I(0)}\right], \quad (18)$$

where Q_A* is the value of biomass in buds at the end of the dormant season; A_{13} is the transfer of photosynthate from leaves to inactive woody tissues; B_1 is the maximum gross photosynthetic rate; A_1 is the photosynthesis light saturation coefficient; K_1 is the photosynthesis light extinction coefficient; Q_1 is the standing crop of tulip tree leaves; Q_5 is the standing crop of other overstory leaves; E_1 is the canopy light intensity function; and I(0) is the light intensity incident on the canopy.

Leaf respiration was divided into two components, a temperature-dependent (Q_{10}) maintenance respiration proportional to leaf biomass, and a temperature-independent respiration proportional to the rate of gross photosynthesis. The transfer of photosynthates from active tissues to buds, leaves, and inactive woody tissues; the transfer from buds to active tissues; and respiration from all other active compartments were also functions of temperature. Hence, seasonality was incorporated not only in net photosynthesis but also in translocation processes.

Another seasonal model of photosynthetic production in temperate deciduous forests was developed as part of the International Biological Program's Woodlands Workshop (Andersson et al. 1973). This model evolved around data from the oak-ash Virelles Forest of Belgium and began as a linear, constant-coefficient model of the whole ecosystem, to which seasonality was added in steps. The live primary producers of the model were divided into six compartments: leaves, twigs and fruit (etc.), branches, stems, large roots, and fine roots. Photosynthate production (net photosynthesis) was treated as a monthly forcing. Values for the forcing were obtained by multiplying net assimilation

estimates (Schulze 1970) by leaf biomass. Respiration from all producer compartments was temperature-dependent, using mean monthly air temperatures. Leaf respiration (RESP1), for example, was given by

$$RESP1 = (R1)(TF)(GROW)(X1) \quad , \tag{19}$$

where R1 is a rate constant, GROW is a growing season switch, X1 is leaf biomass, and TF is a Q_{10} function relating leaf respiration to mean monthly air temperature. The function TF was described by

$$TF = 0.91842 \times 2^{(T-8.4)/10} \quad , \tag{20}$$

where T is the mean monthly air temperature.

The growing season switch (GROW) was also used in modeling the flow of photosynthate from leaves to other producer compartments. These relatively simple means of incorporating seasonality into a linear constant coefficient model appear to do a fairly reasonable job of simulating forest seasonal dynamics. They are analagous with changes regulated in analog simulations by sinusoidal functions, with or without diodes to truncate the flux to zero versus nonzero values (Neel and Olson 1962, Olson 1963a, 1964).

Other models which involve seasonally changing environmental variables (e.g., irradiance, temperature, and water) include the stand energy model of Murphy and Knoerr (1970) (also described in Murphy, Sinclair, and Knoerr 1974 and Sollins et al. 1981), the TEEM model and its primary production submodel PTEEM by Shugart et al. (1974), and the combined TEEM-PROSPER model described by Sollins et al. (1981). PROSPER is an atmosphere-soil-plant water relations model described by Goldstein, Mankin, and Luxmoore (1974).

Seasonal models might also be developed by applying techniques similar to those of Andersson et al. (1973) described above to annual, linear, constant coefficient models of biomass in temperate deciduous forests, of which there are several (see Reichle et al. 1973b). The

approach might be particularly productive using models described by Gardner and Mankin (1981) and Reichle et al. (1973a). The abundant literature on CO_2 exchange, photosynthesis, production, and biomass in temperate deciduous forests is reviewed or cited in the synthesis volumes of Reichle (1970, 1981) and the extensive IBP/Eastern Deciduous Forest Biome reports. The synthesis volumes, in particular, provide a concise reference to information (both annual and seasonal) useful in the development of models of seasonal carbon cycling in the temperate deciduous forests.

1.4.4 Temperate Grassland

The most inclusive ecosystem model of a temperate grassland is the US/IBP Grassland Biome model ELM (see Innis 1978). There are two primary producer submodels in ELM, plant phenology and carbon flux (Sauer 1978). We are concerned here with the carbon submodel. This model, as described by Sauer (1978), divided the plants on a type- or species-specific level into five compartments: shoots, crowns, seeds, live roots, and standing dead. Photosynthesis fixed atmospheric carbon in the shoots. The photosynthate was then distributed to the four live plant components. Root carbon was transferred to the atmosphere via root respiration and to the belowground litter by root mortality. The shoots and crowns released carbon through respiration as well, and the fall of standing dead moved carbon to aboveground litter. Seed germination returned seed carbon to roots and shoots.

The rate of gross photosynthesis (g) of each producer group was regulated by soil water potential, photoperiod temperature, nitrogen, phosphorus, phenology, and irradiance. Specifically,

$$g = 1.032 \min(e_w, e_t, e_N e_P, e_a) \min(i_1, i) i_2 Q \quad , \qquad (21)$$

where 1.032 is a conversion from cal/cm^2 to g carbon/m^2; e_w, e_t, e_N, e_P, and e_a are dimensionless variables representing water potential,

photoperiod, temperature, nitrogen, phosphorus, and phenology, respectively; i_1, i, and i_2 are parameters relating photosynthetically active incident radiation and gross photosynthetic rates (following modeling efforts of Connor 1973); and Q is a measure of quantum efficiency. The environmental factors regulating gross photosynthesis were dealt with as limiting factors with the smallest factor controlling the process [hence the minimum function in Eq. (21)]. This formulation was a means of dealing with the lack of data to support other representations of interactions between all factors.

Shoot respiration rate was depicted as a temperature-dependent function of the gross rate of photosynthesis (after Dye, Brown, and Trlica 1972), and net photosynthesis [or surplus production in the sense of Monsi and Saeki (1953) and Olson (1975)] was taken as the difference between gross photosynthesis and shoot respiration. Respiration of other plant components was also temperature-dependent. Translocation of photosynthates was regulated by several factors depending on the components involved. Transfer from shoots to roots was regulated by live shoot weight, soil water potential, nitrogen, phosphorus, phenology, and grazing. Transfer from crown to shoot and shoot to crown was regulated by relative weight of the compartments, soil water potential, and temperature. Flow of carbon from shoot to seeds was regulated by phenology and shoot weight. The details of these various functions are given by Sauer (1978) and in the references he cites.

The regulation of most aspects of production in this carbon flux primary production submodel of ELM by environmental variables allows simulation of seasonal dynamics. In fact, this was done using seasonal data from the US/IBP Grassland Biome Pawnee site (Sauer 1978), and for the Osage site (Risser et al. 1981). Sauer and Risser et al. reference several sources of seasonal data, at least for the Pawnee and Osage sites, and in general the US/IBP Grassland Biome reports and subsequent synthesis volumes (e.g., Innis 1978, French 1979a, Breymeyer and Van Dyne 1980, and Risser et al. 1981) are sources of and give

reference to sources of seasonal data on production variables and estimates for temperate grasslands in the United States.

The ELM model is the culmination of several grassland modeling efforts initiated during the US/IBP Grassland Biome Program. Van Dyne (1978) has reviewed the historical development of these models, and grassland models have also been reviewed by Innis and Van Dyne (1973), Innis (1975), and Van Dyne and Abramsky (1975). Prior to the Grassland Biome Program, Kelley et al. (1969) presented a set of models of seasonal primary production in eastern Tennessee grasslands. These models were based on work presented by Bledsoe and Olson (1970).

Since the development of the ELM model in 1973, modifications of ELM have been made, although the overall structure remains unchanged (Van Dyne 1978). Detling, Parton, and Hunt (1978, 1979) and Detling (1979) have presented a more mechanistic producer submodel. In this model, the plant (nominally Bouteloua gracilis) was divided into six compartments: mature leaves, young leaves, crowns, upper live roots, middle live roots, and lower live roots. Standing dead was divided into recent and old, and each root level transferred carbon to its own dead root compartment. Model representations of photosynthesis, respiration, and carbon allocation were based on data from Brown and Trlica (1974). Net photosynthesis was regulated abiotically by irradiance, temperature, soil water potential, leaf age, and leaf nitrogen content. The rate of photosynthesis, like other process rates in the model, was determined by reducing a maximum rate with nondimensional scalar multipliers (ranging from 0 to 1) representing the effects of relevant factors; hence,

$$P_N = P_{max} P_I P_T P_A P_{LN} \quad , \tag{22}$$

where P_N is net photosynthesis; P_{max} is the maximum potential net photosynthetic rate determined as a function of acclimation temperature; and P_I, P_T, P_A, and P_{LN} are the dimensionless scalars representing the effects of irradiance, soil water and temperature,

leaf age, and leaf nitrogen, respectively. The scalars were themselves functions of their respective factors (Detling, Parton, and Hunt 1979).

Dark respiration was similarly regulated by temperature and soil water potential. Photosynthate allocation was regulated primarily by soil water potential and nitrogen availability following the results of Benedict and Brown (1944), Bray (1963), Hylton, Ulrich, and Cornelius (1965), Black (1968), Boyer (1970), Davidson (1969), Struik and Bray (1970), and Hunt (1975). In conjunction with the Parton (1978) abiotic model, an early version of the Detling, Parton, and Hunt (1978) model was used to simulate the seasonal biomass dynamics of blue grama using data from the US/IBP Grassland Biome Pawnee site. Results were presented in Detling (1979).

Other grassland models that warrant mention include:

(1) The simulation of management practices (i.e., grazing) in tallgrass prairie by Parton and Risser (1979), which, while not presented as a seasonal model, could be modified to one because it was based on the ELM model.

(2) The dynamic matrix modeling of grazing systems by Singh and Swartzman (1974) and Redetzke and Van Dyne (1979), which used transition matrix techniques rather than the more common difference or differential equations.

(3) The belowground models of Ares and Singh (1974), Parton and Singh (1976), Parton, Singh, and Coleman (1978), and Risser et al. (1981), which concentrated on belowground processes driven by soil water potential and temperature.

(4) Grassland primary production models by Cale (1979) and Gilmanov (1977).

(5) The seasonal model of primary production of perennial grasses in the Serengeti Plain of eastern Africa (Coughenour, McNaughton, and Wallace 1984), which incorporated morphometric traits as well as physiological processes.

(6) The SAGE model of northern mixed prairie discussed by Heasley, Lauenroth and Dodd (1981), and Heasley, Lauenroth, and Yorks

(1984) in which the primary producer submodel simulated the carbon, nitrogen, and sulfur dynamics of cool-season grasses, warm-season grasses, and cool-season forbs.

(7) The annual grassland model, ELMAGE, by Pendleton et al. (1983) which was developed through the adaptation of ELM to the annual vegetation of a California annual grassland.

1.4.5 Northern Coniferous Forest

A seasonal model of a coniferous forest ecosystem was developed by Field et al. (1973) during the International Biological Programme's Woodlands Workshop. Field et al. (1973) considered two photosynthate pools, one for canopy vegetation and one for groundcover vegetation, which were filled via photosynthesis. Photosynthesis was regulated by the physical environment of the stand. The pools provided dry matter for the growth of the canopy and groundcover plants. The canopy plants were divided into five compartments: leaves, branches, boles, respiration parts, and roots. The groundcover plants were divided into three compartments: leaves, stems, and roots. The photosynthate pools released CO_2 through maintenance respiration, but the plant component parts did not themselves respire. Similarly, photosynthates were distributed from the source pools; there was no within-plant translocation.

Net photosynthesis (P_N) was modeled as a function of stomatal resistance (R_S, regulated by soil water potential), irradiance (R), and air temperature (T_A):

$$P_N = k_0 \bullet f_1(R_S) \bullet f_2(T_A) \bullet f_3(R) \qquad (23)$$

where K_0 is a rate constant, $f_1(R_S)$ is a function of stomatal resistance, $f_2(T_A)$ is a function of air temperature, and $f_3(R)$ is a function of irradiance. The abiotic dependences followed functional forms close to those presented in our discussion of abiotic regulation of photosynthesis (see Sect. 1.2 and Larcher 1975).

Respiration was modeled as an increasing exponential function of air temperature until a crash at about 60°C. The distribution of photosynthate was not regulated by abiotic factors, but rather by the unrestricted growth rate of the plants and the availability of photosynthate in the pool. If the photosynthate pool was limited, the demand of reproductive parts was satisfied first, and a constant proportional distribution to other parts was maintained.

Kanninen, Hari, and Kellomaki (1982) described a seasonal dynamic model of aboveground dry matter production in a northern Scots pine stand. The growth rate of a plant community component (Scots pine plant part or understory species) was given by

$$g(t) = g_0[T - (t - \tau)] \bullet f[s(t)] \bullet L \quad , \qquad (24)$$

where $g_0(T)$ is a growth function dependent on temperature (after Hari, Kellomaki,and Vuokko 1977); $f[s(t)]$ is a function of development state, which is in turn a function of temperature; and L is an annual growth level parameter specific for a given component. Growth rates were converted to production rates, and community production was given as the summation of the different components. The dependence on temperature reflected the assumption that growth and production rates were influenced by environmental factors; as a simplifying assumption, water was assumed not to be a limiting factor. According to the authors, the model explained observed variances in daily growth increments rather well.

CONIFER, a model of carbon and water flow through a coniferous forest, was developed during the US/IBP Coniferous Forest Biome Program (see Sollins, Waring, and Cole 1974, Coniferous Forest Biome Modeling Group 1977, Grier and Logan 1977, Sollins et al. 1981). Although the model was developed for a western North American conifer forest, it may be applicable to northern coniferous forests in general. The plant production portion of CONIFER divided plants into nine components: new foliage carbohydrate pool, growth carbohydrate pool, buds of the

previous year, buds of the current year, new foliage, old foliage, stems and branches, fine roots, and large roots. Net photosynthesis by foliage (old and new) was regulated by stomatal resistance (in turn regulated by water stress), temperature, day length, and irradiance (due to the complexity of this model, we do not describe these functional forms in detail here).

Dark respiration was regulated by nighttime air temperature and day length. Photosynthetic transfers were regulated primarily by intrinsic factors (i.e., pool sizes), but in some cases (e.g., transfers to roots) by temperature. The environmental variables were incorporated on a daily or weekly time scale, and, consequently, the carbon dynamics were driven at that time scale.

Other environmentally driven models of coniferous forest dynamics that have time scales on the seasonal level (or are adaptable to seasonal) include a model of gaseous exchange in Scots pine (Lohammer et al. 1980), a model of Scots pine growth (Agren and Axellson 1980), and a model of micrometeorology and hydrology in pine forests (Halldin et al. 1980). The extensive data set used to develop CONIFER (Coniferous Forest Biome Modeling Group 1977), the US/IBP Coniferous Forest Biome reports, the synthesis of the Swedish Coniferous Forest Project (Persson 1980), and the descriptive volume on the boreal coniferous forest by Larsen (1980) provide reference to data sources useful in the development of seasonal models for the boreal coniferous forest biome type.

1.4.6 Boreal Tundra

As is true for most ecosystems that were focal points of the US/IBP biome programs, a number of ecological models were developed for the tundra biome (see Miller, Collier, and Bunnell 1975 for a summary of this development). In an effort to facilitate comparisons of primary production across the range of IBP tundra sites, Jones and Gore (1981) developed a generalized compartment model of plant production in tundra ecosystems. First-order linear equations were used to describe

the flux of biomass between the main functional plant parts: green parts, non-green parts, rhizomes, and roots. These components were modeled for individual species or major groupings of plants (e.g., grass, dwarf shrubs, herbs). Net photosynthetic input to green parts was derived from the sum of outputs to other compartments. Seasonal variation in this input was simulated with a negative cosine function fitted to the input. Seasonality in within-plant transfers was treated with simple, time-dependent, on-off switches. Respiration was also described by a cosine function. Transfer coefficients were based on annual fluxes, and in cases where there were no large seasonal variations, these coefficients were assumed to be constants.

A more complete, seasonal, carbon-budget, ecosystem model for tundra sites was developed during the IBP tundra program by F. L. Bunnell and his associates (Bunnell and Dowding 1974, Bunnell and Tait 1974, Bunnell and Scoullar 1975, 1981). The state-oriented model, ABISKO II, and an earlier version, ABISKO, evolved from decomposition models but also treated photosynthetic production in some detail. Living plant biomass was divided into three compartments: aboveground live, live roots, and live roots and stem bases. Total daily photosynthesis was computed by

$$PHTGRO = C01PHT \bullet SUNLIT \bullet TEMPO \bullet PLITE \bullet C01 \quad , \qquad (25)$$

where PHTGRO is the total daily photosynthesis including dark respiration; C01PHT is the maximum rate of photosynthesis per gram live green biomass; SUNLIT is the proportion of green biomass capable of photosynthesizing (a function incorporating the effect of shading); TEMPO is the effect of temperature on photosynthesis (a curvilinear function of ambient temperature and minimum, maximum, and optimum temperatures for photosynthesis); PLITE is the effect of light (a linear function); and C01 is live green biomass.

Green maintenance respiration (a temperature-determined process) demands of the aboveground green biomass were met and deducted from

total photosynthate before photosynthates were distributed to provide for root maintenance respiration and aboveground green growth. Root maintenance respiration was a geometric function of temperature, and green growth was a fixed rate per unit biomass. Photosynthate was distributed to each in proportion to their respective demands. Any remaining photosynthate was then allocated to rhizomes and stem bases. Each live plant compartment experienced growth respiration costs at 30% of the amount of growth in that compartment.

The IBP Tundra Biome modeling effort often emphasized processes, and one result was a set of models dealing with photosynthesis and primary production processes. A canopy or stand model of vascular plant photosynthesis (the stand-photosynthesis model; Tieszen, Miller, and Oechel 1980), developed as an outgrowth of models by Miller and Tieszen (1972), Miller, Stoner, and Tieszen (1976), and Stoner, Miller, and Oechel (1978), related photosynthesis in a single leaf in the canopy to environmental variables such as temperature, irradiance, and water (both vapor density and soil water potential). The model permitted simulation of primary production on both daily and seasonal bases. A similar model was developed for simulation of moss production (Miller et al. 1978a, Tieszen, Miller, and Oechel 1980).

An interest in how tundra plants control allocation patterns and growth to successfully exploit the climatic-extreme, nutrient-limited environment prompted the development of seasonal models of growth by Stoner, Miller, and Tieszen (1978) and Miller et al. (1978b). These models incorporated the effects of light, water, temperature, phosphorus, nitrogen, and plant processes. Miller et al. (1978b) considered the plant to have six components: leaf blade, leaf sheath, stem base complex, rhizome, roots, and aboveground reproductive structures. Each plant part in turn consisted of eight biochemical components: cell wall polymers, sugars, polysaccharides, protein, amino acids and amides, lipids and fatty acids, phosphate, and phytic acid. This degree of resolution is probably not needed in many applications, but the empirical and modeling effort and results involved can be of use in developing other seasonal models of photosynthate allocation.

Other models of photosynthesis or production in the tundra biome include a seasonal model of population processes involving physiology (photosynthesis, respiration, and translocation), environmental parameters, and population parameters (Lawrence, Lewis, and Miller 1978), a vascular plant canopy model simulating the effect of canopy on microclimate, and microclimate on production (Stoner, Miller, and Oechel 1978), and a model of the effect of tundra vegetation on soil temperatures (Ng and Miller 1975, 1977).

There are numerous data sets involving seasonal estimates of photosynthesis, primary production, carbon flux, and climate or abiotic variables for tundra systems. These studies are reviewed in at least three IBP synthesis volumes (Tieszen 1978a, Brown et al. 1980, and Bliss, Heal, and Moore 1981). One of these volumes (Tieszen 1978a) is devoted entirely to vegetation and production ecology. Other synthesis volumes include Wielgolaski (1975a,b), Sonneson (1980), Bliss (1977), Heal and Perkins (1978), Rosswall and Heal (1975), and Holding et al. (1974). The information in these references, both seasonal and annual, should be valuable in the development of seasonal carbon models for the boreal tundra biome type.

1.4.7 Arid Lands

While the limited total plant biomass of arid land ecosystems reduces their role as carbon reservoirs on the global scale, the increasing decertification of grasslands suggests a need for understanding the seasonal carbon dynamics of arid ecosystems, as these ecosystems may be increasing in importance. This need is particularly important in attempts to incorporate the areal extent of biomes or changing land use patterns into global carbon studies.

Several versions of a photosynthetic production or plant submodel were developed as part of the US/IBP Desert Biome program (Valentine 1973, 1974, Goodall 1981). These included models with (1) constant coefficients common to all plants, (2) constant coefficients differentiated by plant groups, (3) time-varying coefficients determined by data or phenology, and (4) rates dependent on

environmental conditions. In the fourth version (Valentine 1974, Goodall 1981), plants were divided into leaves, stems, roots, fruit, and seed pods. The daily rate of photosynthesis (A_i) of various plant groups was treated as a function of irradiation (L), leaf temperature (T), and leaf water stress (W), and was described by

$$A_i = \frac{L}{\alpha_{1i} + L} \bullet \max[0,\min(1,\frac{\alpha_{2i} - W}{\alpha_{2i} - \alpha_{3i}})] \bullet F(T) \bullet \alpha_{4i} \quad , \qquad (26)$$

where

$$F(T) = \left[\frac{\alpha_{5i} - T}{\alpha_{5i} - \alpha_{6i}}\right]^{\alpha_{7i}} \exp\left[\frac{\alpha_{7i}}{\alpha_{8i}}\left[1 - \left[\frac{\alpha_{5i} - T}{\alpha_{5i} - \alpha_{6i}}\right]^{\alpha_{8i}}\right]\right] \qquad (27)$$

for $T \leq \alpha_{5i}$, and $F(T) = 0.0$ for $T > \alpha_{5i}$. The coefficients $\alpha_{1i} - \alpha_{8i}$ are constant rate coefficients for the i_{th} species and age group.

Respiration (R_i) of the i_{th} organ, per unit carbon content, was described by

$$R_i = [\beta_{1ij} - \beta_{2ij} \bullet \exp(\beta_{3ij}{}^{T})] \bullet \min(1,\frac{\beta_{4ij} - W}{\beta_{4ij} - \beta_{5ij}}) \quad ,(28)$$

where W is the water stress within the organ in question, T is the temperature within the i_{th} organ, and the β's are constants for the i_{th} organ of the j_{th} plant group. The translocation of photosynthate from the leaves was modeled as a fairly complex function of the ratio of labile carbon to total carbon in the leaves, leaf temperature, and water stress.

Van Keulen and de Wit (1981) developed a crop growth simulation model that dealt with the calculation of primary production in water-limited situations. Their model of seasonal production in

arid lands was based on the BACROS canopy model of de Wit et al. (1978) and the work of Van Keulen and de Wit (1975). Canopy photosynthesis and growth were driven by the water balance in the soil and involved numerous parameters related to evapotranspiration (e.g., temperature, precipitation, and plant characteristics). A process-oriented model of net CO_2 exchange for C_4 grasses was developed for a Chihuahuan desert playa community (Cunningham, Balding, and Syvertsen 1974) to function as part of a community carbon flow model. The model used irradiance, air temperature, and soil water potential as environmental forcings, and the model might be useful as a submodel in a seasonal arid land ecosystem model. In addition, Reynolds et al. (1980) described a rather detailed model of primary productivity and carbon allocation for the desert shrub Larrea tridentata, a dominant species throughout much of the U.S. desert southwest. The model was more oriented towards whole-plant physiology than to ecosystem properties, but it might also be adaptable to an ecosystem-level model.

Many of the plant process models in arid-land ecosystems are concerned with grazing (e.g., Goodall 1965, 1967, 1969, and 1970), especially by domestic livestock. Considering the above reference to desertification, these types of models may prove especially useful. Goodall's models were driven by abiotic variables, and, in particular, photosynthesis was treated as a function of air temperature and soil moisture (Goodall 1973a,b, 1975, 1981, Goodall and Gist 1973).

Goodall, Perry, and Howes (1981) provided a synthesis of US/IBP Desert Biome program results. The reviews and literature citations of the contributors to this volume, including discussion of soil-vegetation-atmosphere interactions (Ayyad 1981) and primary production (Rodin 1981), combined with numerous US/IBP Desert Biome research and modeling reports, provide a source of data for the modeling of seasonal carbon cycles in desert or arid land biomes.

1.5 EMPIRICAL DATA SOURCES FOR SEASONAL PRIMARY PRODUCTION

This section is the result of a survey of relevant literature designed to compile empirical seasonal data on photosynthetic

production in a number of terrestrial biome types. The survey is not exhaustive, but it is representative of the type and resolution of the data available. The cited works will often provide reference to additional sources of data. These data may prove useful in the development and validation of primary production submodels (as part of seasonal carbon models on a biome scale), particularly for geographical regions that have not been the focus of earlier modeling efforts.

The synopses that follow include the geographic site of the data, the literature citation, and briefly the temporal resolution (e.g., monthly) and nature (e.g., biomass) of the production data. Seasonal abiotic data, when available, are noted, and the approximate highs and lows of the seasonal data are usually included.

1.5 EMPIRICAL DATA SOURCES FOR SEASONAL PRIMARY PRODUCTION

1.5.1 Tropical Forest

Authors:	Malaisse et al. (1972)
Site:	Miombo woodland, Kasapa/Luiswishi, Zaire
Production data:	Monthly total organic matter (average for 1968-1970)
Seasonal high:	March - 292.6 g m^{-2}
Seasonal low:	October - 25.3 g m^{-2}
Other data:	Monthly rainfall, temperature, humidity, evapotranspiration, and total radiation

Author:	Odum (1970)
Site:	Rain forest, El Verde, Puerto Rico
Production data:	Monthly optical density of leaf and small limb biomass (data absent for July and August at some sample sites; data for two years at one site)
Seasonal high:	September 2.0
Seasonal low:	March - 0.75-0.9

Authors:	Odum and Jordan (1970)
Site:	Rain forest, El Verde, Puerto Rico
Production data:	Hourly/daily CO_2 metabolism of plastic-enclosed rain forest collected over several months
Seasonal high:	July 30 - 0.66 g C $m^{-2}h^{-1}$
Seasonal low:	January 13-14 and February 23-24 - 0.27 g C $m^{-2}h^{-1}$
Other data:	Comparable data on insolation, temperature, evaporation, and transpiration

Authors:	Odum et al. (1970)
Site:	Rain forest, El Verde, Puerto Rico
Production data:	Daily/monthly net daytime photosynthesis and night respiration for several plant species for several days from December 1965 to January 1967
Seasonal high:	Photosynthesis - August - 2.0 g C $m^{-2}d^{-1}$ (*Ormosia krugii*) Respiration -- April - 2.7 g C $m^{-2}d^{-1}$ (*Manilkara bidentata*)
Seasonal low:	Photosynthesis - March - 0.03 g C $m^{-2}d^{-1}$ (*M. bidentata*) Respiration -- January - 0.03 g C $m^{-2}d^{-1}$ (*M. bidentata*)
Other data:	Day and night transpiration over several months, several diurnal records of carbon metabolism for different species

Author:	Whitmore (1975)
Site:	Rain forest, Ula Gombak, Malaysia
Production data:	Monthly percent new leaf growth, flowering and fruiting for approximately six years (from L. Medway 1972, Biol. J. Linnean. Soc. Lond. 4:117-146)
Other data:	Seasonal rainfall and temperature for several rain forests in the Far East.

1.5.2 Tropical Savanna/Grassland

Author: Afolayan (1978)
Site: Northern Guinea savanna, Nigeria
Production data: Monthly grass standing crop, daily herbage growth rates at beginning and end of growing season, mean daily rates of net herbage production by vegetation type
Seasonal high: Grass standing crop (by plot)
Terminalia -- October-November - 20-60 kg $ha^{-1}10^2$
Woodland -- October-November - 10-35 kg $ha^{-1}10^2$
Burkea -- September-October - 10-30 kg $ha^{-1}10^2$
Seasonal low: Grass standing crop (by plot)
Terminalia -- June - 5 kg $ha^{-1}10^2$
Woodland -- June - ca. 0 kg $ha^{-1}10^2$
Burkea -- June - ca. 0 kg $ha^{-1}10^2$
Note: Seasonal high varies with grazing and burning regime
Other data: Mean monthly rainfall, temperature, and relative humidity

Authors: Ambasht, Maurya, and Singh (1972)
Site: Protected tropical grassland, Varanasi, India
Production data: Monthly biomass standing crop at two sites, monthly production at one site
Seasonal high: Standing crop
Dicanthium annulatum community -- October - 2050 g m^{-2}
Heteropogon contortus community -- November - 3268 g m^{-2}
Productivity
Dicanthium annulatum community -- August - 914 g $m^{-2}month^{-1}$
Seasonal low: Standing crop
Dicanthium annulatum community -- July - 691 g m^{-2}
Heteropogon contortus community -- June - 385 g m^{-2}
Productivity
Dicanthium annulatum community -- April - 600 g $m^{-2}month^{-1}$

Author: Choudhary (1972)
Site: Tropical grassland, Varanasi, India
Production data: Monthly standing crop for green aboveground, non-green aboveground, underground, and total
Seasonal high: Green aboveground -- August - 278.4 g m^{-2}
Underground -- July - 1008.0 g m^{-2}
Seasonal low: Green aboveground -- January-60.8 g m^{-2}
Underground -- January - 457.6 g m^{-2}
Other data: Monthly litter standing crop

Author: Cornet (1981)
Site: Sahelian grassland, Senegal
Production data: Weekly/biweekly estimates of biomass and productivity for two consecutive growing seasons (1977-78) for three sites (June to October)
Seasonal high: Site I -- early September - 77.67 g dw m^{-2}
Site II -- late September - 91.28 g dw m^{-2}
Site III -- late September - 79.0 g dw m^{-2}
Seasonal low: Site I -- late October - 0 g dw m^{-2}
Site II -- late August - 0 g dw m^{-2}
Site III -- early August, October - 0 g dw m^{-2}

Author: Coutinho (1982)
Site: Campo Cerrado savanna, Brazil
Production data: Seasonal aboveground biomass from July 1971 to March 1973
Seasonal high: Plot 1 (burned July 1971) -- May 1972 - 5.75 tons ha^{-1}
Plot 2 (burned January 1972) -- March 1973 - 7.5 tons ha^{-1}
Note: Biomass on plot 2 showed a temporary plateau at about 4.0 tons ha^{-1} from May to September 1972
Other data: Monthly precipitation, temperature, evaporation potential, and photoperiod

Authors:	Cresswell et al. (1982)
Site:	Nylsvley savanna, South Africa
Production data:	Monthly estimates of biomass and daily rate of biomass change; weekly/monthly shoot production; biweekly estimates of photosynthetic rate
Seasonal high:	Biomass -- March - 83 g m^{-2} Change in biomass -- December - 5.5 g $m^{-2}d^{-1}$ Photosynthesis -- varies with species (max. in February - 45 ng $cm^{-2}s^{-1}$)
Seasonal low:	Biomass -- October - 25 g m^{-2} Change in biomass -- March - -3.0 g $m^{-2}d^{-1}$ (a net loss) Photosynthesis -- varies with species (min. in April - 0 ng $cm^{-2}s^{-1}$
Other data:	Biweekly leaf resistance, leaf water potential, and photosynthetically active radiation; light saturation curves, leaf temperature curves, and leaf water potential related to net photosynthesis

Author:	Egunjobi (1974)
Site:	Savanna, western Nigeria
Production data:	Monthly standing crop (total and by species) and monthly estimates of daily rate of accumulation
Seasonal high:	Standing crop -- November - 1529 g m^{-2} Rate of change -- August-September - 15.4 g $m^{-2}d^{-1}$
Seasonal low:	Standing crop -- April-May - 100 g m^{-2} Rate of change -- December - -13.8 g $m^{-2}d^{-1}$
Other data:	Monthly rainfall, nutrient composition, litter

Authors: Grunow, Groeneveld, and Du Toit (1980)
Site: Nylsvley savanna, South Africa
Production data: Three-week to eight-week interval aboveground biomass and estimates of the rate of change in biomass on grazed and ungrazed sites in the grass layer of the savanna
Seasonal high: Biomass -- February - 84 g m^{-2}
Rate of change -- late November - 5 g $m^{-2}week^{-1}$
Seasonal low: Biomass -- September - 23 g m^{-2}
Rate of change -- June-September - 0 g $m^{-2}week^{-1}$

Authors: Gupta, Saxena, and Sharm (1972)
Site: Arid grasslands, Jodhpur, India
Production data: Monthly total aboveground biomass, net production, and productivity for three plots and three years
Seasonal high: Biomass -- October 1970 - 175 g m^{-2} (in a protected plot)
Seasonal low: Biomass -- July-September 1969 - 0 g m^{-2}(in a protected plot)
March-May 1970 - 0 g m^{-2}(in a grazed plot)

Author: Hopkins (1968)
Site: Olokemeji savanna, Nigeria
Production data: Seasonal standing crop of the herb stratum
Seasonal high: November-December 1956 - 550 g m^{-2}
September-December 1957 - 650 g m^{-2}
Seasonal low: February - 0 g m^{-2}
Other data: Seasonal rainfall; changes in mean number of species per quadrat, number of species encountered, number of species flowering

Authors:	Kelly and Walker (1976)
Site:	Lowveld savanna, Zimbabwe
Production data:	Monthly aboveground herbaceous standing crop in four areas differing in degree of utilization; maximum and minimum woody standing crop
Seasonal high:	February, March, April, or May - 25-200 g m^{-2} (varies from year to year and with grazing pressure)
Seasonal low:	December - 0-50 g m^{-2} (varies from year to year and with grazing pressure)
Other data:	Monthly rainfall, soil moisture, and soil temperature

Author:	Lamotte (1975)
Site:	Lamto savanna, Ivory Coast
Production data:	Monthly live aboveground biomass of the herb strata in different savanna types, root biomass in burned and unburned savanna, and biomass of select species in burned savanna
Seasonal high:	Wooded <u>Andropogon</u> savanna (for example) Burned (in January) -- December - 6.5 tons ha^{-1} Unburned -- January - 9.5 tons ha^{-1}
Seasonal low:	Wooded <u>Andropogon</u> savanna (for example) Burned (in January) -- January - 0 tons ha^{-1} March - 3.3 tons ha^{-1} Unburned -- November - 5.5 tons ha^{-1}

Authors:	Menaut and Cesar (1979, 1982)
Sites:	Different savanna types on the Lamto savanna, Ivory Coast
Production data:	Monthly biomass for six herb species; monthly aboveground biomass of the herbaceous layer by component on four sites; monthly underground biomass of the herbs on two sites; seasonal belowground production on seven sites; monthly herbaceous production on three sites

Seasonal high: Underground
Loudetia savanna -- December-January - 25 Mg ha^{-1}
Andropogoneae shrub and tree -- December-January - 14 Mg ha^{-1}
Aboveground
Loudetia savanna -- February, June-August - 1.0 Mg ha^{-1}
Andropogoneae shrub and tree -- early November - 2.5 Mg ha^{-1}

Seasonal low: Underground
Loudetia savanna -- August and November - 15 Mg ha^{-1}
Andropogoneae shrub and tree -- May - 8 Mg ha^{-1}
Aboveground
Loudetia savanna -- November - 0 Mg ha^{-1}
Andropogoneae shrub and tree -- early April - 0.4 Mg ha^{-1}

Authors: Misra and Mall (1975)
Site: Tropical grassland, Ujjain, India
Production data: Monthly green biomass, leaf area index, and chlorophyll
Seasonal high: Biomass -- September - 434.8 g m^{-2}
Seasonal low: Biomass -- May - 24.0 g m^{-2}

Authors: Naik and Mishra (1976)
Sites: Tropical grasslands, Ambikapur, India (Site I protected for two years, Site II protected for ten years)
Production data: Monthly aboveground standing crop
Seasonal high: Site I -- November - 538.22 g m^{-2}
Site II -- December - 675.96 g m^{-2}
Seasonal low: Site I -- July - 123.28 g m^{-2}
Site II -- June - 265.45 g m^{-2}
Other data: Monthly rainfall, temperature, and relative humidity

Authors: Strugnell and Pigott (1978)

Sites: Grasslands (grazed and ungrazed), Rwenzori National Park, Uganda

Production data: Monthly mean biomass by plant component, mean leaf area index; seasonal changes in biomass and leaf area index after burning; mean daily production rate over six-month growing season; monthly estimates of daily rate of production

Seasonal high: Production rate

Site I (grazed) -- December and April - 2.75 g $m^{-2}d^{-1}$

(ungrazed) -- December and April - 4 g $m^{-2}d^{-1}$

Seasonal low: Production rate

Site I (grazed) -- August and October - <0.1 g $m^{-2}d^{-1}$

(ungrazed) -- July-August - <0.25 g $m^{-2}d^{-1}$

Other data: Monthly rainfall, temperature, and sunshine; dry matter production and crude protein content as a function of rainfall

Authors: Ohiagu and Wood (1979)

Sites: Southern Guinea savanna (grazed and ungrazed), Nigeria

Production data: Bimonthly standing crop of grass and grass production

Seasonal high: Standing crop (grazed) -- October - 2550 kg ha^{-1}

(ungrazed) -- January - 3800 kg ha^{-1}

Production rate (grazed) -- October - 800 kg $ha^{-1}month^{-1}$

(ungrazed) -- October - 950 kg $ha^{-1}month^{-1}$

Seasonal low: Standing crop (grazed) -- April - 1300 kg ha^{-1}
(ungrazed) -- April - 1500 kg ha^{-1}
Production rate (grazed and ungrazed) - February - 0 kg $ha^{-1}month^{-1}$

Other data: Bimonthly rainfall

Authors: San Jose and Medina (1975, 1976)

Site: Trachypogon savanna (burned and unburned plots), Calabozo, Venezuela

Production data: Weekly/monthly aboveground biomass by treatment, leaf area index, and photosynthetic area by treatment

Seasonal high: Biomass (burned in late December) -- August - 415 g m^{-2}
(unburned) -- August - 325 g m^{-2}

Seasonal low: Biomass (burned in late December) -- January - 10 g m^{-2}
(unburned) -- late March - 15 g m^{-2}

Other data: Weekly rainfall, evaporation, temperature, and radiation; relationship between leaf transpiration and tank evaporation

Authors: San Jose, Berrade, and Ramirez (1982)

Site: Trachypogon savanna (burned and unburned plots), Venezuela

Production data: Monthly belowground dry matter production and productivity

Seasonal high: Productivity (unburned) -- July - 88.6 g $m^{-2}month^{-1}$
(burned December) -- July - 105.1 g $m^{-2}month^{-1}$

Seasonal low: Productivity (unburned) -- April - 0 g $m^{-2}month^{-1}$
(burned December) -- April and August - 0 g $m^{-2}month^{-1}$
(burned March) -- April and September - 0 g $m^{-2}month^{-1}$

Authors:	Shrimal and Vyas (1975)
Site:	Udaipur grasslands (protected and unprotected plots), India
Production data:	Monthly aboveground, belowground, and total biomass
Seasonal high:	Aboveground (protected) -- September - 180 g m^{-2}
	(unprotected) -- September - 200 g m^{-2}
	Belowground (protected) -- July - 110 g m^{-2}
	(unprotected) -- July - 105 g m^{-2}
Seasonal low:	Aboveground (protected) -- May - 20 g m^{-2}
	(unprotected) -- May - 20 g m^{-2}
	Belowground (protected) -- September - 30 g m^{-2}
	(unprotected) -- September - 40 g m^{-2}
Other data:	Monthly rainfall and temperature

Author:	Singh (1968)
Sites:	Tropical grasslands, Varanasi, India (four sites)
Production data:	Monthly aboveground biomass by species; seasonal average (4 periods) plant biomass and productivity
Seasonal high:	Aboveground biomass -- September - 494-577 g m^{-2} (varies with degree of utilization and year)
Seasonal low:	Aboveground biomass -- May and November -- 38-206 g m^{-2} (varies with degree of utilization and year)
Other data:	Monthly rainfall and temperature

Author:	Singh (1974)
Site:	Tropical grassland, Kurukshetra, India
Production data:	Monthly mean aboveground plant biomass, tiller density, and changes in biomass for several species; month of peak biomass by species; seasonal (rainy, winter, and summer) estimates of net primary production
Seasonal high:	Total aboveground biomass -- September - 1974 g m^{-2}
	Rate of production -- rainy - 13.9 g $m^{-2}d^{-1}$
Seasonal low:	Total aboveground biomass -- December - 105 g m^{-2}
	Rate of production -- winter - 1.0 g $m^{-2}d^{-1}$

Other data: Monthly rainfall, temperature, and incident solar radiation; seasonal rainfall and usable solar radiation; monthly phenological stages by species; annual energy budget; system transfer functions

Authors: Singh and Yadava (1972)
Site: Tropical grassland, Kurukshetra, India
Production data: Monthly aboveground biomass, tiller density, underground plant biomass, net production, and productivity
Seasonal high: Net productivity -- June - 16.36 g $m^{-2}d^{-1}$
Seasonal low: Net productivity -- October - 5.9 g $m^{-2}d^{-1}$
Other data: Monthly temperature and rainfall; system transfer functions

Authors: Singh and Ambasht (1975)
Sites: Tropical grasslands (three sites), Varanasi, India
Production data: Monthly standing crop and change in standing crop of shoots and roots
Seasonal high: Standing crop (shoots) -- November, December - 1292-3068 g m^{-2} (varies with degree of protection)
(roots) -- February - 165-174 g m^{-2} (protected sites)
September - 578 g m^{-2} (grazed heavily)
Seasonal low: Standing crop (shoots) -- June - 252-461 g m^{-2} (varies with degree of protection)
(roots) -- June - 67-73 g m^{-2} (protected sites)
May - 146 g m^{-2} (grazed heavily)

Author:	Varshney (1972)
Site:	Tropical grassland, Delhi, India
Production data:	Monthly aboveground biomass (green, total, and by species)
Seasonal high:	Green biomass -- October - 771 g m^{-2}
Seasonal low:	Green biomass -- April - 9 g m^{-2}
Other data:	Monthly rainfall and radiation

1.5.3 Temperate Forest

Author:	Dinger (1971)
Site:	*Liriodendron* forest, Oak Ridge, Tennessee
Production data:	Seasonal patterns of number of leaves per unit canopy volume, and leaf surface per unit volume of canopy over five-month growing season
Seasonal high:	Number of leaves -- mid-May - 6 leaves m^{-3} Leaf area -- June - 3.75 m^2m^{-3}
Seasonal low:	Number of leaves -- April - 0-4 leaves m^{-3} Leaf area -- April - 0.15 m^2m^{-3}

Authors:	Chung and Barnes (1980)
Site:	15-year-old loblolly pine stand, North Carolina
Production data:	Biweekly/monthly changes in CO_2 evolution, rates of photosynthetic production, photosynthate metabolism, photosynthate surplus, and total photosynthate production over growing season (May-September)
Seasonal high:	Total photosynthate production -- July - 2500 mg glucose d^{-1}
Seasonal low:	Total photosynthate production -- May and September - 1500 mg glucose d^{-1}

Author:	Day (1973)
Site:	Southern Appalachian forest, Coweeta Watershed, North Carolina
Production data:	Weekly/biweekly/monthly mean diameter increments, mean surface area per leaf, leaf production, total production, wood production, and bark production for five tree species from March to November
Seasonal high:	Total production -- August-October - 250-1550 kg ha^{-1} Leaf production -- June-October - 175-850 kg ha^{-1} Wood production -- August-November - 75-675 kg ha^{-1}

Seasonal low: Total production -- March - 0 kg ha^{-1}
Leaf production -- March - 0 kg ha^{-1}
Wood production -- March-May - 0 kg ha^{-1} (except oak, which had a low of 0 kg ha^{-1} in March)
Note: Variability is related to differences in species

Authors: Edwards et al. (1981)
Site: Liriodendron forest, Oak Ridge, Tennessee
Production data: Biweekly/monthly total fixed carbon for Liriodendron and all other species over six-month growing season
Seasonal high: Liriodendron -- late June - 7.5 g C $m^{-2}d^{-1}$
Total -- late June - 10.5 g C $m^{-2}d^{-1}$
Seasonal low: Liriodendron -- October - 0.2 g C $m^{-2}d^{-1}$
Total -- October - 0.25 g C $m^{-2}d^{-1}$
Other data: Seasonal solar radiation

Authors: Edwards and Harris (1977)
Site: Liriodendron stand, Oak Ridge, Tennessee
Production data: Biweekly/monthly estimates of root biomass and root respiration
Seasonal high: Root (<0.5 cm) biomass -- February and September - 750-800 g m^{-2}
Root respiration -- August - 4 g C $m^{-2}d^{-1}$
Seasonal low: Root (<0.5 cm) biomass -- May - 200 g m^{-2}
Root respiration -- February - 0.5 g C $m^{-2}d^{-1}$

Authors: Edwards, Harris, and Shugart (1973)
Site: Liriodendron forest, Oak Ridge, Tennessee
Production data: Monthly $^{14}CO_2$ efflux from soil above labeled roots from November through August
Seasonal high: Tulip poplar -- June - 32 x 10^7 mg ^{14}C $m^{-2}d^{-1}$
Oak -- June - 12 x 10^7mg ^{14}C $m^{-2}d^{-1}$
Pine -- May-June - 5 x 10^7 mg ^{14}C $m^{-2}d^{-1}$

Seasonal low: Tulip poplar -- January and August - 0 mg $^{14}C\ m^{-2}d^{-1}$
Oak -- January - 0 mg $^{14}C\ m^{-2}d^{-1}$
Pine -- January - 0 mg $^{14}C\ m^{-2}d^{-1}$

Other data: ^{14}C distribution in Liriodendron tree nine months after inoculation

Authors: Harris, Kinerson, and Edwards (1978)

Sites: Liriodendron forest, Oak Ridge, Tennessee; loblolly pine plantation, Piedmont area, North Carolina

Production data: Monthly root biomass (fine and large roots) in Liriodendron stand, and monthly root biomass (fine roots) in pine plantation, for approximately two years

Seasonal high: Poplar (roots <0.5 cm) -- September - 800-900* g m^{-2}
early March - 700-800* g m^{-2}
Poplar (roots >0.5 cm) -- April - 1300 g m^{-2}
Pine (fine roots) -- late December - 650 g m^{-2}

Seasonal low: Poplar (roots <0.5 cm) -- May - 200 g m^{-2}
Poplar (roots >0.5 cm) -- February-March - 250-600* g m^{-2}
Pine (fine roots) -- January - 220 g m^{-2}
August - 250 g m^{-2}

Note: * indicates differences between years

Author: Kinerson (1975)

Site: Loblolly pine stand, Piedmont area, North Carolina

Production data: Monthly foliage, stem, branch, and root respiration

Seasonal high: Foliage -- August - 13.5 g $CO_2\ m^{-2}h^{-1}$
Stem -- July - 0.9 g $CO_2\ m^{-2}h^{-1}$
Branch -- July - 0.2 g $CO_2\ m^{-2}h^{-1}$
Root -- July - 0.05 g $CO_2\ m^{-2}h^{-1}$

Seasonal low: Foliage -- February - 2.5 g CO_2 $m^{-2}h^{-1}$
Stem -- December-January - 0.0 g CO_2 $m^{-2}h^{-1}$
Branch -- December-January - 0.0 g CO_2 $m^{-2}h^{-1}$
Root -- November-February - 0.0 g CO_2 $m^{-2}h^{-1}$

Other data: Monthly soil and air temperature; relationships between temperature and stem respiration, surface area and tissue respiration, and root weight and root respiration; stem respiration Q_{10}(=2.9)

Authors: Lassoie et al. (1984)

Site: Red cedar understory in an oak-hickory forest, Ashland, Missouri

Production data: Seasonal net photosynthetic rate

Seasonal high: May - 2.5-3.0 mg $g^{-1}h^{-1}$

Seasonal low: February - 0.0 mg $g^{-1}h^{-1}$

Other data: Seasonal air and soil temperature, photosynthetically active radiation and soil water potential; seasonal transpiration; net photosynthetic rate as function of time of d for several sampling dates

Authors: Nishioka et al. (1978)

Site: Warm temperate evergreen oak forest, Minamata, Japan

Production data: Monthly/bimonthly mean gross photosynthetic rate, mean daily gross photosynthetic rate, daily respiration rate, and daily surplus production rate; 10-day average rates of mean daily gross production, mean daily rate of canopy respiration, and mean daily rate of surplus production; bimonthly mean respiratory rate in top layer leaves

Seasonal high: Gross production -- September - 32 g CO_2 $m^{-2}d^{-1}$
Canopy respiration -- July-August - 22 g CO_2 $m^{-2}d^{-1}$
Surplus production -- September-October - 20 g CO_2 $m^{-2}d^{-1}$

Seasonal low: Gross production -- December-February - 15 g CO_2 $m^{-2}d^{-1}$
Canopy respiration -- February - 4 g CO_2 $m^{-2}d^{-1}$
Surplus production -- June-July - near zero or a net loss

Note: Surplus production in November, March, May near that of seasonal high

Other data: Seasonal temperature, daily radiation; relationships between gross production and respiration, and radiation and temperature

Author: Olson (1971)

Site: Oak forest, Minnesota

Production data: Monthly standing crop by living, dead, strata, and plant part

Seasonal high: Herb layer -- September - 207 kg ha^{-1}
Shrub layer -- September - 638 kg ha^{-1}
Tree layer -- September - 164,953 kg ha^{-1}
Roots -- July - 20,630 kg ha^{-1}

Seasonal low: Herb layer -- April - 25 kg ha^{-1}
Shrub layer -- May - 311 kg ha^{-1}
Tree layer -- April - 160,907 kg ha^{-1}
Roots -- November - 9889 kg ha^{-1}

Note: Ovington et al. (1963), Ecology 44:52-62, cited as original source of data

Other data: Similar data for nearby prairie and savanna woodland

Authors: Reichle et al. (1973a)

Site: <u>Liriodendron</u> forest, Oak Ridge, Tennessee

Production data: Monthly/bimonthly lateral root carbon

Seasonal high: September - 0.85 kg m^{-2}

Seasonal low: March - 0.5 kg m^{-2}

Author: Satoo (1970)
Site: Ulmus parivola stand, Japan
Production data: Weekly/monthly leaf biomass and leaf area index, seasonal changes in productive structure over growing season (April-July)
Seasonal high: Leaf biomass -- late May - 0.5 kg dw m^{-2}
Seasonal low: Leaf biomass -- mid-April - 0.1-0.2 kg dw m^{-2}
Other data: Relationships between leaf area and production, leaf dry weight and stem increment

Authors: Schulze and Koch (1971)
Site: Beech forest, Solling, Federal Republic of Germany
Production data: Biweekly/monthly net photosynthesis in sun and shade crown from March to December
Seasonal high: Sun crown (70 klx) -- late July - 12 mg CO_2 g^{-1}dw h^{-1}
Shade crown (12 klx) -- late August - 11 mg CO_2 g^{-1}dw h^{-1}
Seasonal low: Sun crown -- October-December, mid-April - 0.0 mg CO_2 g^{-1}dw h^{-1}
Shade crown -- November-December, March-mid-April - 0.0 mg CO_2 g^{-1}dw h^{-1}
Other data: Seasonal light intensity; diel changes in CO_2 exchange

Author: Struik (1965)
Sites: Mesic Acer, dry-mesic Quercus, and wet-mesic Acer forests, and sand barrens in Wisconsin
Production data: Weekly plant weight, length, and percent growth for several forest herbs over growing season (May-November)
Seasonal high: Amphicarpa (an annual) -- late September - 2.5 g $plant^{-1}$
Seasonal low: Amphicarpa (an annual) -- May - 0 g $plant^{-1}$

Authors:	Woodwell and Botkin (1970)
Site:	Oak-pine forest, Brookhaven, New York
Production data:	Daily/seasonal stem respiration for scarlet oak over four years, and net photosynthesis of scarlet oak leaves for six-month growing season over four years
Seasonal high:	Stem respiration -- June - 260 mg CO_2 m^{-2} bark h^{-1} Net photosynthesis -- June -- 3.0-5.5 mg CO_2 g^{-1}dw m^{-2}
Seasonal low:	Stem respiration -- January-February - 20 mg CO_2 m^{-2} bark h^{-1} Net photosynthesis -- May and October - near 0 mg CO_2 g^{-1}dw h^{-1}
Other data:	Atmospheric CO_2 concentrations, relationship between respiration and temperature

Author:	Yoda (1978b)
Site:	Warm, temperate evergreen oak forest, Minamata, Japan
Production data:	Bimonthly leaf respiration rate; monthly canopy respiration rate; seasonal changes in leaf, branch, stem, and root respiration
Seasonal high:	Leaf -- May-June - 4.5 tons $ha^{-1}month^{-1}$ Branch -- July-August - 2 tons $ha^{-1}month^{-1}$ Stem -- July-August - 1.33 tons $ha^{-1}month^{-1}$ Root -- July-August - 0.5 tons $ha^{-1}month^{-1}$
Seasonal low:	Leaf -- December-February - 1.25 tons $ha^{-1}month^{-1}$ Branch -- December-February - 0.5 tons $ha^{-1}month^{-1}$ Stem -- December-February - 0.5 tons $ha^{-1}month^{-1}$ Root -- December-February - 0.25 tons $ha^{-1}month^{-1}$
Other data:	Respiration rate as a function of height above ground, relative illuminance, temperature, and branch/stem diameter

1.5.4 Temperate Grassland

Author: Andrzejewska (1974)
Site: Sheep pasture, Mate Pieniny Mts., Jowarski, Poland
Production data: Monthly estimates of green biomass and plant growth rate on pastures of high and low fertilization
Seasonal high: Low fertilization (biomass) -- June - 102.4 g m^{-2}
High fertilization (biomass) -- July - 189.7 g m^{-2}
Seasonal low: Low fertilization (biomass) -- October - 24.5 g m^{-2}
High fertilization (biomass) -- October - 36.1 g m^{-2}

Authors: Baier et al. (1972)
Site: Sand prairie, Illinois River, Bath, Illinois
Production data: Biweekly/monthly standing crop for four plots over growing season
Seasonal high: Late July - 100-240 g m^{-2} (varying with plots)
Seasonal low: May - 0-40 g m^{-2} (varying with plots)

Authors: Brown and Trlica (1974)
Site: Pawnee Grassland, Colorado
Production data: Hourly/daily estimates of photosynthesis, dark respiration, belowground respiration, and leaf area index for blue grama over growing season
Seasonal high: Photosynthesis -- mid-June -
91.5 mg CO_2 dm^{-2} leaf area h^{-1}
Dark respiration -- late August -
100.1 mg CO_2 dm^{-2} leaf area h^{-1}
Root respiration -- mid-June -
2332.8 mg CO_2 m^{-2} ground area h^{-1}
Seasonal low: Photosynthesis -- mid-June and early August -
0 mg CO_2 dm^{-2} leaf area h^{-1}
Dark respiration -- late July -
8.3 mg CO_2 dm^{-2}leaf area h^{-1}
Root respiration -- mid-July -
50.5 mg CO_2 m^{-2} ground area h^{-1}

Other data: Concurrent soil water potential, irradiance, air temperature; photosynthesis and respiration as functions of soil water, irradiance, and temperature for blue grama and wheatgrass

Author: Christie (1981)
Site: Mitchell grassland ecosystem, southwest Queensland, Australia
Production data: Seasonal aboveground biomass production
Seasonal high: Early January - 40 kg $ha^{-1}d^{-1}$

Authors: Dahlman and Kucera (1965)
Site: Missouri Prairie Research Station, east-central Missouri
Production data: Seasonal (April, July, October, January) standing crop of roots by horizon
Seasonal high: A_1 horizon -- July - 1617 g m^{-2}
A_2 horizon -- January - 157 g m^{-2}
B_2 horizon -- October - 154 g m^{-2}
Seasonal low: A_1 horizon -- April - 1188 g m^{-2}
A_2 horizon -- July - 117 g m^{-2}
B_2 horizon -- July - 113 g m^{-2}

Authors: Dye, Brown, and Trlica (1972)
Site: Shortgrass prairie, Pawnee Grassland, Colorado
Production data: Daily/weekly estimates of blue grama photosynthesis over the growing season
Seasonal high: Irrigation treatment -- late August - 4.4 g $CO_2m^{-2}h^{-1}$
Control (untreated) -- mid-June - 4.5 g $CO_2m^{-2}h^{-1}$

Seasonal low: Irrigation treatment -- early September - 2.2 g CO_2 $m^{-2}h^{-1}$
Control (untreated) -- mid-July - 0.5 g CO_2 $m^{-2}h^{-1}$

Note: Irrigation was discontinued on August 17; near exponential decline of photosynthesis in control was related to drought

Author: French (1979b)
Site: Shortgrass prairie, Pawnee Grassland, Colorado
Production data: Seasonal vegetation biomass over growing season for four years
Seasonal high: Late June-mid-August - 140-200 g m^{-2} (both time and value vary from year to year)
Seasonal low: May-late August - 90-110 g m^{-2} (both time and value vary from year to year)

Authors: French, Steinhorst, and Swift (1979)
Sites: Seven North American grassland sites (mountain, bunchgrass, mixed, desert, tallgrass, southern shortgrass, and northern shortgrass)
Production data: Producer biomass for early, middle, and late growing season for three years
Brief results: Biomass values vary with grassland type and from year to year

Authors: Fukai, Koh, and Kumura (1976)
Site: Barley field, Tokyo, Japan
Production data: Seasonal CO_2 exchange and daily net production
Seasonal high: Net production -- late April - 18 g $m^{-2}d^{-1}$

Author: Hadley (1970)
Site: Tallgrass prairie, Oakville Prairie, Grand Forks, North Dakota

Production data: Monthly estimates of standing crop and net primary herbage production for several stand types over the growing season

Seasonal high: Standing crop -- August - 175-350 g dw m^{-2}
Production -- June-July - 4 g dw $m^{-2}d^{-1}$

Seasonal low: Standing crop -- May - near 0 g dw m^{-2}
Production -- August-September - -4 g dw $m^{-2}d^{-1}$ (a net loss)

Authors: Hadley and Kieckhefer (1963)

Site: Trelease Prairie, Urbana, Illinois (burned and unburned plots)

Production data: Monthly standing crop for bluestem and Indian grass live shoots, caloric content for bluestem and Indian grass shoots and roots

Seasonal high: Standing crop -- September-November - 1400-1500 g m^{-2}

Seasonal low: Standing crop -- May - 0-50 g m^{-2}

Author: Kelting (1954)

Sites: Grazed and virgin tallgrass prairie, central Oklahoma

Production data: Seasonal (spring, summer, and fall) live standing crop

Seasonal high: Virgin -- summer - 2872 lb $acre^{-1}$
Grazed -- summer - 3684 lb $acre^{-1}$

Seasonal low: Virgin -- spring - 1177 lb $acre^{-1}$
Grazed -- spring - 1481 lb $acre^{-1}$

Other data: Monthly soil moisture

Authors: King and Hutchinson (1983)

Site: Tallgrass pasture, Arimdale, New South Wales, Australia (three grazing regimes)

Production data: Seasonal (spring, summer, fall, and winter) green herbage and roots

Seasonal high: Ungrazed -- fall - 1000-1400 kg dw ha^{-1}
Heavily grazed -- spring - 500 kg dw ha^{-1}

Seasonal low: Ungrazed -- winter - 600 kg dw ha^{-1}
Heavily grazed -- winter - 200 kg dw ha^{-1}
Other data: Seasonal soil temperature and moisture index, and rainfall

Authors: Ode, Tieszen, and Lerman (1980)
Site: Mixed prairie, north-central South Dakota
Production data: Biweekly/bimonthly biomass, ^{13}C composition, and biomass composition for C_3 and C_4 plants in upland and lowland sites
Seasonal high: Live biomass (upland) -- late June - 149 g m^{-2}
(lowland) -- mid-June - 183 g m^{-2}
Seasonal low: Live biomass (upland) -- mid-April - 0 g m^{-2}
(lowland) -- mid-April - 0 g m^{-2}
Note: Average increase in biomass between April and June was 2.4 g $m^{-2}d^{-1}$ in the upland site and 3.8 g $m^{-2}d^{-1}$ in the lowland site
Other data: Monthly temperature and precipitation; biweekly soil moisture

Author: Old (1969)
Site: Reclaimed tallgrass prairie, east-central Illinois
Production data: Biweekly dry matter standing crop over growing season; total root biomass for May, July, August, and September for four depths; and root and foliar nutrient content for four months and three months, respectively; all by burn treatment
Seasonal high: Aboveground standing crop -- September - 300-600* g m^{-2}
Root standing crop -- August - 1917-2111* g m^{-2}
Seasonal low: Aboveground standing crop -- May - 50 g m^{-2}
Root standing crop -- May - 1305-1411* g m^{-2}
Note: * indicates variation associated with differences in burn treatment
Other data: Weekly temperature, vapor pressure deficit, and solar radiation

Authors: Pendleton et al. (1983)
Site: Annual grassland, San Joaquin Experimental Range, California
Production data: Monthly/bimonthly shoot dry matter for early grasses, late grasses, and early forbs
Seasonal high: Early grass -- early May - 1250 kg ha^{-1}
Late grass -- April - 1200 kg ha^{-1}
Early forb -- early May - 600 kg ha^{-1}
Seasonal low: Early grass -- June-November - 0 kg ha^{-1}
Late grass -- June-November - 0 kg ha^{-1}
Early forb -- June-November - 0 kg ha^{-1}
Other data: Seasonal shoot phosphorus and nitrogen

Authors: Penfound and Kelting (1950)
Site: Little bluestem pasture, Norman, Oklahoma
Production data: Monthly live standing crop and percent increase in areal cover over growing season by burn treatment
Seasonal high: Standing crop -- August - 56-92 g m^{-2} (decreasing with burn intensity)
Seasonal low: Standing crop -- April - 7-38 g m^{-2} (decreasing with burn intensity)

Author: Plewczynska-Kuras (1974)
Site: Sheep pasture, Mate Pieniny Mts., Jaworski, Poland
Production data: Seasonal (March, June, and October) belowground biomass by tissue, soil layer, and age of root
Seasonal high: Total belowground -- March - 805.4 g m^{-2}
Seasonal low: Total belowground -- October - 600.8 g m^{-2}
Other data: Seasonal soil organic matter by depth and particle size

Authors: Rice and Penfound (1954)
Site: Plowed tallgrass prairie, Norman, Oklahoma

Production data: Living areal cover and living standing crop in May and August by plowing treatment

Seasonal high: August - 4264-4770 lb $acre^{-1}$ (highest in plowed plot)

Seasonal low: May - 112-1654 lb $acre^{-1}$ (highest in control plot)

Other data: Soil organic carbon at three depths for April and November

Authors: Risser et al. (1981)

Sites: Tallgrass prairie, Osage County, Oklahoma (grazed and ungrazed sites)

Production data: Biweekly/monthly aboveground and belowground live biomass for two to three years

Seasonal high: Aboveground (grazed) -- July - 290 g m^{-2}
(ungrazed) -- late June - 275-325 g m^{-2}
Belowground (grazed) -- July - 1150 g m^{-2}
(ungrazed) -- March 1971 - 1780 g m^{-2}
July 1970 - 1390 g m^{-2}

Seasonal low: Aboveground (grazed) -- December-April - 0 g m^{-2}
(ungrazed) -- December-March - 0 g m^{-2}
Belowground (grazed) -- late September - 920 g m^{-2}
(ungrazed) -- August 1970 - 1140 g m^{-2}
October 1971 - 920 g m^{-2}

Other data: Seasonal soil water, temperature, rainfall, and heat flux

Authors: Sims and Singh (1971, 1978a)

Sites: Nine US/IBP Grassland Biome, North American grassland sites

Production data: Seasonal live aboveground and belowground biomass for grazed and ungrazed sites over the growing season

Brief results: Timing and magnitude of seasonal highs and lows varied between sites and was related to abiotic variables

Authors:	Smiens and Olsen (1970)
Site:	Tallgrass prairie, Malmberg Prairie, Red River Valley, northwest Minnesota
Production data:	Biweekly green standing crop for grasses and forbs in four "community" types over growing season
Seasonal high:	Grasses -- August-September - 2872-7488 kg ha^{-1} Forbs -- late July - 304-948 kg ha^{-1}
Seasonal low:	Grasses -- early July - 1132-2988 kg ha^{-1} Forbs -- September - 56-208 kg ha^{-1}

Authors:	Traczyk and Kochev (1974)
Site:	Sheep pasture, Mate Pieniny Mts., Jaworski, Poland
Production data:	Monthly green biomass by total green, monocots, dicots, mosses, and species for two years over growing seasons
Seasonal high:	Total green -- July - 48.97-90.4 g m^{-2} (varies between years)
Seasonal low:	Total green -- September-October - 7.93-25.83 g m^{-2} (varies between years)

Author:	Williamson (1976)
Site:	Old sheep pasture, chalk grassland, West Sussex, England
Production data:	Bimonthly standing crop of live material by species; bimonthly estimates of productivity of live grasses
Seasonal high:	Total standing crop -- August - 354.8 g dw m^{-2} Productivity -- July - 6 g $m^{-2}d^{-1}$
Seasonal low:	Total standing crop -- February - 54.4 g dw m^{-2} Productivity -- December - 0.1 g $m^{-2}d^{-1}$

1.5.5 Boreal Coniferous Forest

Authors:	Agren et al. (1980)
Site:	15-20-year-old Scots pine stand, Ivantjarnsheden, Sweden
Production data:	Monthly net photosynthetic production for different age classes of needles and whole tree
Seasonal high:	Whole tree -- July-August - 425-500 g C $month^{-1}$
Seasonal low:	Whole tree -- December-March - 0 g C $month^{-1}$
Note:	Variation in seasonal high reflects differences between years

Author:	Chapin (1983)
Site:	135-year-old black spruce forest, Alaska
Production data:	Ten-day interval biomass by plant part for two species of understory shrub
Seasonal high:	Vaccinium -- January (value varies with plant part) Ledum -- August (value varies with plant part)
Seasonal low:	Vaccinium -- May (value varies with plant part) Ledum -- May (value varies with plant part)
Other data:	Ten-day interval estimates of nitrogen and phosphorus concentration by plant part in the two species

Authors:	Chapin and Tryon (1983)
Site:	Taiga forest, Alaska
Production data:	Monthly leaf area, weight of current long shoots, leaf respiration, and fine root respiration for several tree and shrub species; mean seasonal Q_{10} for leaf respiration
Seasonal high:	Shoot production -- July-September - 0.7-10 mg $shoot^{-1}$ (varies with species) Leaf respiration -- May-June (varies with species) Root respiration -- August-September (varies with species)

Seasonal low: Shoot production -- May - 0 mg shoot^{-1}
Leaf respiration -- August-September (varies with species)
Root respiration -- May-June (varies with species)

Other data: Monthly nitrogen and phosphorus concentration in current leaves and fine roots

Authors: Ericsson and Persson (1980)

Site: 20-year-old Scots pine stand, Jadraas, Sweden

Production data: Weekly/monthly changes in root length, root biomass, and starch content in roots <1 mm and 1-2 mm

Seasonal high: Biomass (roots <1 mm) -- August - 90-120* g dw m^{-2}
(roots 1-2 mm) -- early October - 20-90* g dw m^{-2}

Seasonal low: Biomass (roots <1 mm) -- late June - 30-50* g dw m^{-2}
(roots 1-2 mm) -- early June - 5-15* g dw m^{-2}

Note: * indicates differences between control and irrigated-fertilized plot; treatment reduced biomass of roots <1 mm, increased biomass in roots 1-2 mm

Other data: Seasonal air temperature

Authors: Flower-Ellis and Persson (1980)

Sites: Young and mature Scots pine stands in Sweden

Production data: Weekly/monthly fine root biomass for three species

Seasonal high: Young stand
<u>Vaccinium</u> -- June - 65 g m^{-2}
<u>Calluma</u> -- October - 70 g m^{-2}
<u>Pinus</u> -- June - 45 g m^{-2}
Mature stand
<u>Vaccinium</u> -- September - 175 g m^{-2}
<u>Calluna</u> -- April - 80 g m^{-2}
<u>Pinus</u> -- August - 150 g m^{-2}

Seasonal low: Young stand

<u>Vaccinium</u> -- May and August - 35 g m^{-2}

<u>Calluna</u> -- July - 35 g m^{-2}

<u>Pinus</u> -- July - 10 g m^{-2}

Mature stand

<u>Vaccinium</u> -- April - 135 g m^{-2}

<u>Calluna</u> -- May - 40 g m^{-2}

<u>Pinus</u> -- September - 85 g m^{-2}

Author: Helms (1965)

Site: 38-year-old Douglas fir stand, Washington

Production data: Seasonal net assimilation and respiration of dominants and co-dominants

Seasonal high: Net assimilation (dominants) -- summer - 0.3 mg CO_2 $g^{-1}h^{-1}$

(co-dominants) -- summer - 0.35 mg CO_2 $g^{-1}h^{-1}$

Respiration (dominants) -- summer - 0.05 mg CO_2 $g^{-1}h^{-1}$

(co-dominants) -- summer - 0.08 mg CO_2 $g^{-1}h^{-1}$

Seasonal low: Net assimilation (dominants) -- winter - 0.05 mg CO_2 $g^{-1}h^{-1}$

(co-dominants) -- winter - 0.04 mg CO_2 $g^{-1}h^{-1}$

Respiration (dominants) -- winter - 0.01 mg CO_2 $g^{-1}h^{-1}$

(co-dominants) -- winter - 0.02 mg CO_2 $g^{-1}h^{-1}$

Other data: Seasonal air temperature, relative humidity, and precipitation; typical diurnal patterns in net assimilation by season; net assimilation as a function of light and temperature

Authors:	Larsson and Tenow (1980)
Site:	Mature Scots pine forest, Ivantjarnsheden, Sweden
Production data:	Seasonal needle biomass, biweekly needle growth
Seasonal high:	Biomass -- August - 2766 kg dw ha^{-1}
Seasonal low:	Biomass -- October - 2201 kg dw ha^{-1}
Other data:	Five-d interval mean air temperature and precipitation over growing season

Authors:	Linder and Troeng (1980)
Site:	20-year-old Scots pine stand, Jadraas, Sweden
Production data:	Ten-day interval mean diurnal patterns of net photosynthesis early in the growing season for a one-year-old shoot of Scots pine; ten-day mean net photosynthesis for current shoots and stem respiration at several temperatures
Seasonal high:	Net photosynthesis One-year shoot -- late June - 25 mg CO_2 $dm^{-2}h^{-1}$ Current shoot -- early September - 20 mg CO_2 $dm^{-2}hr^{-1}$ Respiration (25°C) -- late June - 20 mg CO_2 hr^{-1}
Seasonal low:	Net photosynthesis One-year shoot -- early April - 0 mg CO_2 $dm^{-2}h^{-1}$ Current shoot -- late November - 0 mg CO_2 $dm^{-2}h^{-1}$ Respiration (25°C) -- mid-May - 7.5 mg CO_2 h^{-1}
Other data:	Seasonal temperature and photon flux density; stomatal conductance and mesophyll conductance as a function of temperature and photon flux; net photosynthesis as a function of temperature and photon flux

Author: Satoo (1971)

Site: 20-year-old Pinus densiflora stand, Japan

Production data: Seasonal leaf, total, aboveground, and stem biomass

Seasonal high: Leaf -- August-October - 9.6 tons ha^{-1}
Total -- April - 125 tons ha^{-1}
Aboveground -- March - 100 tons ha^{-1}
Stem -- March - 75 tons ha^{-1}

Seasonal low: Leaf -- November - 5.5 tons ha^{-1}
Total -- August - 110 tons ha^{-1}
Aboveground -- April - 87 tons ha^{-1}
Stem -- April - 65 tons ha^{-1}

Authors: Teskey, Grier, and Hinckley (1984)

Site: Pacific silver fir stand, Cedar River, Washington

Production data: Biweekly/bimonthly estimates of net photosynthesis and dark respiration for current and one-year-old foliage (laboratory study)

Seasonal high: Photosynthesis (current foliage) September - 10.4 mg CO_2 dm^{-2} h^{-1} (at 15°C)
(One-year foliage) July - 12.9 mg CO_2 dm^{-2} h^{-1} (at 15°C)
Respiration (current foliage) June - 62 mg CO_2 $dm^{-2}h^{-1}$ (at 30°C)
(One-year foliage) September - 12 mg CO_2 dm^{-2} h^{-1} (at 30°C)

Seasonal low: Photosynthesis (current foliage) July - 0 mg CO_2 $dm^{-2}h^{-1}$ (at 1°C)
(One-year foliage) May-June - 1.5 mg CO_2 $dm^{-2}h^{-1}$
Respiration (current foliage) <2 mg $CO_2dm^{-2}h^{-1}$ (at 1°C) throughout year
(One-year foliage) <2 mg $CO_2dm^{-2}h^{-1}$ (at 1°C) throughout year

Other data: Diel variations in air temperature, vapor pressure deficit, photosynthetically active radiation, stomatal conductance, and xylem water potential for three dates (17 July, 9 August, and 17 September 1981)

1.5.6 Boreal Tundra

Authors: Allessio and Tieszen (1978)
Site: Barrow, Alaska
Production data: Seasonal pattern of ^{14}C translocation in the graminoid *Dupontia fisheri*

Authors: Billings, Peterson, and Shaver (1978)
Site: Barrow, Alaska
Production data: Seasonal daily mean dark CO_2 flux from tundra vegetation and soil
Seasonal high: July 25 - 367 mg CO_2 m^{-2} h^{-1}
Seasonal low: June 24 - 52 mg CO_2 $m^{-2}h^{-1}$
Other data: Seasonal daily mean soil temperature

Authors: Bunnell and Scoullar (1981)
Site: *Calluna vulgaris* stand, Moor House blanket bog, UK
Production data: Seasonal aboveground live biomass
Seasonal high: August - 900 g m^{-2}
Seasonal low: January - 450 g m^{-2}
Other data: Seasonal standing dead

Authors: Caldwell, Johnson, and Fareed (1978)
Site: Barrow, Alaska
Production data: Ten-day interval leaf area index by canopy height over three-month growing season
Seasonal high: At 0-2.5 cm -- July 27 and August 24 - 0.55
At 10-15 cm -- August 9 - 0.02
Seasonal low: At 0-2.5 cm -- June 23 - 0.5
At 10-15 cm -- June 23 - 0.0

Authors: Coyne and Kelley (1978)
Site: Barrow, Alaska

Production data:	Ten-day interval mean daily gross community uptake, ecosystem respiration, and chlorophyll over three-month growing season
Seasonal high:	Gross CO_2 uptake -- early and late July - 21 g CO_2 $m^{-2}d^{-1}$ Respiration -- early July - 18 g CO_2 $m^{-2}d^{-1}$
Seasonal low:	Gross CO_2 uptake -- August 20 - 0 g CO_2 $m^{-2}d^{-1}$ Respiration -- late August - 7 g CO_2 $m^{-2}d^{-1}$
Other data:	Seasonal irradiance and soil surface temperature; seasonal and diurnal CO_2 flux and concentration in the atmosphere

Authors:	Dennis, Tieszen, and Vetter (1978)
Site:	Barrow, Alaska
Production data:	Ten-day interval aboveground standing crop, belowground standing crop, leaf area index, and ash-free caloric content (three species)
Seasonal high:	Live aboveground -- August 4 - 75 g m^{-2} Live belowground -- June 15 - 899 g m^{-2}
Seasonal low:	Live aboveground -- June 15 - 7 g m^{-2} Live belowground -- July 5 - 522 g m^{-2}
Note:	Data collected over three-month growing season (June-August)

Author:	Flower-Ellis (1975)
Site:	*Andromeda polifolia* stand, Stordalen mire, Sweden
Production data:	Weekly/biweeky estimates of daily weight changes for *A. polifolia* leaves
Seasonal high:	Early July - 177 mg d^{-1} x 10^3
Seasonal low:	Late July-early August -67 mg d^{-1} x 10^3 (i.e., a weight loss)
Other data:	Weekly/biweekly estimates of mean weight/unit length for *A. polifolia* leaves and percent total weight by tissue for *A. polofolia* individuals

Authors: Gerasimenko and Zalenskiy (1974)
Site: Wrangel Island, Rogers Bay, the Arctic
Production data: Monthly photosynthesis during growing season for two species; maximum potential and visible photosynthesis for several species

Authors: Johansson and Linder (1975)
Site: Subarctic mire, Stordalen, Sweden
Production data: Weekly photosynthesis for four species; seasonal (June, July, September) photosynthetic rate for a variety of species
Seasonal high: June-July - values quite variable by species
Seasonal low: September-May - near 0 to <1 mg CO_2 g^{-1}dw h^{-1}
Other data: Weekly air temperature, peat temperature, and solar radiation

Authors: Karenlampi, Tammisola, and Hurme (1975)
Site: Laboratory, samples of lichen from Kevo Research Station, northern Finland
Production data: Weekly/biweekly/"monthly" weight growth of Cladonia alpestris
Seasonal high: Late July - 0.25%
Seasonal low: Mid to late June and early August - 0.05%
Other data: Predicted CO_2 exchange for parts of the lichen Cetraria nivalis

Authors: Kellomaki et al. (1977)
Site: Dwarf shrub community, central Finland
Production data: Biomass production of community (daily)
Seasonal high: Mid-May - 12 g $m^{-2}d^{-1}$

Authors: Oechel and Sveinbjornsson (1978)
Site: Barrow, Alaska
Production data: Ten-day interval maximum and minimum rates of CO_2 exchange, net CO_2 accumulation, dry matter accumulation in bryophytes over three-month growing season; response of net CO_2 exchange to temperature at different dates through the growing season
Seasonal high: CO_2 accumulation -- July 19 - 225 mg CO_2 g^{-1} dw 10 d^{-1}
Biomass accumulation -- August 23 - 0.95 g g^{-1}
Seasonal low: CO_2 accumulation -- June 9 - 75 mg CO_2 g^{-1} dw 10 d^{-1}
Biomass accumulation -- June 24 - 0.1 g g^{-1}
Other data: Seasonal solar radiation, air temperature, tissue temperature, and maximum photosynthesis records for several species

Author: Rastorfer (1978)
Site: Barrow, Alaska
Production data: Monthly bryophyte biomass
Seasonal high: August - 142 g m^{-2}
Seasonal low: June - 115 g m^{-2}
Note: Data collected over three-month growing season (June-August)

Author: Skre (1975)
Site: Laboratory transplants from Hardangervidda, Norway
Production data: Seasonal apparent photosynthesis, gross photosynthesis, and dark respiration for several species
Seasonal high: Apparent photosynthesis -- July (values vary with species)
Dark respiration -- July (values vary with species)

Seasonal low: Apparent photosynthesis -- September (values vary with species)
Dark respiration -- August-September (values vary with species)

Other data: Q_{10}'s for gross photosynthesis, dark respiration, and root respiration; root respiration; CO_2 flux as a function of light and temperature

Author: Tieszen (1975, 1978b)

Site: Barrow, Alaska

Production data: Weekly mean minimum and maximum CO_2 exchange, dark respiration, and leaf area index; ten-day interval vascular photosynthesis, cumulative CO_2 uptake, and leaf area index; mean exposed leaf area and leaf photosynthesis for select vascular plant species over the three month growing season (June-August)

Seasonal high: Vascular photosynthesis -- August 4 - 16 g CO_2 $m^{-2}d^{-1}$
Net incorporation of CO_2
all dicots -- mid July - 4.68 g CO_2 m^{-2}land d^{-1}
all monocots -- mid July - 2.0-6 g CO_2 m^{-2}land d^{-1}

Seasonal low: Vascular photosynthesis -- June 25 - 2 g CO_2 $m^{-2}d^{-1}$
Net incorporation of CO_2
all dicots -- mid June - 0.24 g CO_2 m^{-2}land d^{-1}
all monocots -- mid June - 0.32 g CO_2 m^{-2}land d^{-1}

Other data: Seasonal irradiance and air temperature, seasonal carboxylase activity

Author:	Tieszen (1978c)
Site:	Barrow, Alaska
Production data:	Comparison of seasonal course of net photosynthesis by cuvette, atmospheric CO_2 flux by aerodynamic method, and aboveground production rate
Seasonal high:	By cuvette -- July 20 - 12 g CO_2 $m^{-2}d^{-1}$
	By CO_2 flux -- July 20 - 5.5 g CO_2 $m^{-2}d^{-1}$
	By production rate -- June - 2.5 g CO_2 $m^{-2}d^{-1}$
Seasonal low:	By cuvette -- June 20 - 2 g CO_2 $m^{-2}d^{-1}$
	By CO_2 flux -- late August - 2.5 g CO_2 $m^{-2}d^{-1}$
	By production rate -- August 10 - 0.5 g CO_2 $m^{-2}d^{-1}$
Other data:	Seasonal irradiance

1.5.7 Arid Lands

Author: Ayyad (1981)
Sites: Middle Eastern and Algerian deserts
Production data: Monthly new green plant dry weight in three plant associations in the Algerian desert and in four associations of the desert Middle East
Seasonal high: Algerian desert
Artemisia -- December
Lygeum -- May
Atriplex and *Suaedea* -- May
Middle East
Poterium -- April - 2.8 log kg ha^{-1}
Anabasidetum -- March - 2-2.5 log kg ha^{-1}
Artemisietum -- March-April - 1.5-2.25 log kg ha^{-1}
Zygophelletum -- March-April - 1.5-2.25 log kg ha^{-1}
Seasonal low: Algerian desert
Artemisia -- January
Lygeum -- January
Atriplex and *Suaedea* -- January
Middle East
Poterium -- November - 1.8 log kg ha^{-1}
Anabasidetum -- September - 1-1.9 log kg ha^{-1}
Artemisietum -- February - 1-2 log kg ha^{-1}
Zygophelletum -- September - 0.4-1.25 log kg ha^{-1}

Authors: Bamberg et al. (1976)
Site: Mojave desert, Rock Valley, Nevada
Production data: Monthly estimates of CO_2 assimilation for two years and four desert shrub species
Seasonal high: March-June (varied with year and species)
Seasonal low: September-January - 0 mg CO_2 g^{-1} leaf dry weight d^{-1}
Other data: Monthly rainfall and temperature

Authors: Bamberg et al. (1975)
Site: Mojave desert, Nevada Test Site
Production data: Biweekly/monthly estimates of net photosynthesis and transpiration for five species of desert shrub from March to June
Seasonal high: March - 10-45 mg CO_2 g^{-1}dw h^{-1} (varied with species)
Seasonal low: June - 0-1 mg CO_2 g^{-1}dw h^{-1} (varied slightly with species)
Other data: Monthly precipitation, soil temperature, and soil moisture; net photosynthesis in Krameria parvifola as a function of temperature and soil moisture

Authors: Cunningham et al. (1979)
Site: Creosote bush stand, Dona Anna County, New Mexico
Production data: Seasonal (spring, summer, fall, and winter) relative total aboveground production
Other data: Monthly precipitation and soil water potential

Authors: Ludwig and Whitford (1981)
Sites: Chihuahuan desert alluvial fans and other areas, New Mexico
Seasonal high: Creosote bush (leaves) -- October - 125-350 kg ha^{-1}
Mesquite -- April-June - 225-325 kg ha^{-1}
Annual forbs -- July - 375 kg ha^{-1}
Perennial forbs -- August - 100 kg ha^{-1}
Tobosa grass (green) -- November 1971 - 6000 kg ha^{-1}
August 1972 - 5750 kg ha^{-1}
July 1973 - 4000 kg ha^{-1}
Seasonal low: Creosote bush (leaves) -- February-May - 0 kg ha^{-1}
Mesquite -- December-March - 0 kg ha^{-1}
Annual forbs -- November-April - 0 kg ha^{-1}
Perennial forbs -- November-April - 0 kg ha^{-1}
Tobosa grass (green) -- much of the year - 0 kg ha^{-1}

Note: Mesquite grass showed year to year variation similar to that of tobosa grass

Other data: Monthly precipitation, soil water, and temperature

Authors: Ludwig and Whitford (1981)

Sites: Sarayia, Sde-Boqer, and Migda, Negev Desert, Israel

Production data: Monthly biomass for several species

Seasonal high: Sarayia

Sarcopoterium shrub -- April - 130 kg ha^{-1}

Artemisia shrub -- June-July - 75 kg ha^{-1}

Poa -- March - 3 kg ha^{-1}

Annuals -- April - 4.5 kg ha^{-1}

Sde-Boquer

Erodium -- April - 320 kg ha^{-1}

Annuals -- April - 250 kg ha^{-1}

Migda

Annuals -- April - 6000 kg ha^{-1}

Seasonal low: Sarayia

Sarcopoterium shrub -- November - 75 kg ha^{-1}

Artemisia shrub -- November - 20 kg ha^{-1}

Poe -- November-December - 0-0.25 kg ha^{-1}

Annuals -- November-January - 0 kg ha^{-1}

Sde-Boqer

Erodium -- November-December - 0 kg ha^{-1}

Annuals -- November-January - 0 kg ha^{-1}

Migda

Annuals -- November-January - 0-200 kg ha^{-1}

Other data: Seasonal rainfall and soil moisture

Author: Strain (1969)

Site: Desert shrub stand, Colorado desert, California

Production data: For several species, seasonal (summer and winter) estimates of net photosynthesis and dark respiration; monthly relative carbohydrate content in bark and leaf

Seasonal high:	Photosynthesis -- winter - values vary greatly with species
	Respiration -- winter - values vary greatly with species
Seasonal low:	Photosynthesis -- summer - values vary greatly with species
	Respiration -- summer - values vary greatly with species
Other data:	Air temperatures concurrent with measurements of photosynthesis

Authors:	Van Keulen and de Wit (1981)
Site:	Migda, Israel
Production data:	Biweekly standing crop from December to May for two years
Seasonal high:	Late March-April - 6.0-8.2 tons dw ha^{-1}
Seasonal low:	December - 0-0.1 tons dw ha^{-1}
Other data:	Biweekly total soil moisture

2. LITTERFALL ON A SEASONAL BASIS

2.1 INTRODUCTION

The term "litterfall" denotes the flux of biomass from the living or standing dead state to contact with the ground. Several compendia containing litterfall data now exist, including Bray and Gorham (1964), DeAngelis, Gardner, and Shugart (1981), and Cannell (1982). This data base is extensive; Cannell, in fact, lists data from 1200 forest sites. However, because nearly all of the data in these sources are average annual fluxes, they are of little help in constructing seasonal carbon budgets. In addition, the above references consider only forest sites and thus omit the biomass turnover occurring in tropical savannas, temperate grasslands, and boreal tundra.

In addition to these compendia of empirical information, there also exists at least one general predictive model of litterfall, that of Meentemeyer, Box, and Thompson (1982). This model expresses total annual litter production (either leaf or total plant) as a function of actual evapotranspiration. As with the sources of empirical data mentioned above, however, this predictive model is not useful in modeling seasonal litterfall processes.

Seasonal ecosystem models are mixed in their treatment of litterfall. The tropical rain forest model of Bandhu et al. (1973) treated litterfall as a constant, although the authors believed litterfall to be inversely related to rainfall. Krishnamurthy (1978) modeled the transfer of standing dead to litter in an Indian tropical grassland with time-varying transfer coefficients for four time periods (the coefficients were constant within a given time period). Sollins, Reichle, and Olson (1973) treated litterfall in a southern Appalachian deciduous forest as a seasonal forcing, in the case of leaf litterfall, but the fall of woody litter was modeled with constant annual rate coefficients. Andersson et al. (1973), in their model of a Belgian oak-ash forest, included an on-off switch (or unit impulse forcing) which was on for the duration of the litterfall period. Field et al.

(1973) incorporated litterfall in their model of a coniferous forest as a smooth unimodal function of time. The CONIFER model (Coniferous Forest Biome Modeling Group 1977) treated the leaf fall rate as the summation of a constant minimum leaf fall rate, a time-varying rate, and an acute old foliage defoliation rate.

Litterfall was modeled in a more mechanistic way in the ELM grassland model described by Sauer (1978). The fall of standing dead was hypothesized to be the result of physical disturbance by rain and snow. The rate of fall increased with the moisture content of the standing dead tissue. Detling, Parton, and Hunt (1979) treated the fall of blue grama grass as an increasing function of daily precipitation. The tundra model of Jones and Gore (1972, 1978, 1981) used constant rate coefficients and seasonal switches. However, the ABISKO tundra model of Bunnell and Dowding (1974) treated the transfer of standing dead to litter as a nonlinear function of temperature, moisture, substrate, trampling, wind, and snow. Obviously, the modeling of seasonal litterfall has been dealt with in a number of different ways, with no particular one predominant over the others. Several authors (e.g., Sauer 1978) have commented on the need for a better understanding of the environmental regulation of litterfall.

We have surveyed some of the relevant literature to compile empirical seasonal litterfall data from a variety of terrestrial sites. The result is not an exhaustive listing of such data, but possibly enough data exist to guide the realistic incorporation of the litterfall flux in several terrestrial biome carbon models.

In the synopses below, we give the geographic site of the data, the literature citation, and, briefly, the resolution of the data (e.g., weekly, monthly, or seasonally; leaf litter, twigs, etc.). We do not present the actual data here, aside from noting the approximate highs and lows of the seasonal fluxes. Other data, such as seasonal rainfall, are mentioned where relevant.

2.2 EMPIRICAL DATA SOURCES FOR SEASONAL LITTERFALL

2.2.1 Tropical Forest

Authors: Adis, Furch, and Irmler (1979)
Site: Central Amazonian inundation forest (igapo)
Type of data: Monthly; total litter
Seasonal high: July - 160 g $m^{-2}month^{-1}$
Seasonal low: January to March - 20 to 30 g $m^{-2}month^{-1}$
Other data: The rainy season is January to March

Authors: Bernhard-Reversat, Huttel, and Lemee (1972).
Site: Evergreen rain forest, Banco Natl. Park, Ivory Coast
Type of data: Monthly litterfall by plant part
Seasonal high: January-February
Seasonal low: August
Other data: Monthly rainfall, temperature, soil water content, and evapotranspiration

Authors: Boojh and Ramakrishran (1982)
Site: Subtropical evergreen montane forest, India
Type of data: Monthly; total, by plant part, and by species; seasonal (dry and wet) litterfall, amount and rate
Seasonal high: Total litter -- March - 293 g m^{-2}
Seasonal low: Total litter -- June-July - 25 g m^{-2}
Other data: Monthly temperature and rainfall

Author: Edwards (1977)
Site: Lower montane rain forest, New Guinea
Type of data: Monthly; woody and non-woody
Seasonal high: August to October - 3 g $m^{-2}d^{-1}$
Seasonal low: March - 1.5 g $m^{-2}d^{-1}$
Other data: Monthly rainfall and temperature; May to August is the dry season

Authors: Haines and Foster (1977)
Site: Barro Colorado Island, Panama
Type of data: Monthly; leaf energy and twig energy
Seasonal high: January - 220 kcal $m^{-2}week^{-1}$
Seasonal low: July to October - 70 kcal $m^{-2}week^{-1}$
Other data: Monthly rainfall

Authors: Jenny, Gessel, and Bingham (1949)
Sites: Three virgin forests, Colombia
Type of data: Monthly; total litter
Seasonal high: Chinchina I 1947: April - 195 g m^{-2}; 1948: March, June - 200 g m^{-2}
Chinchina II 1947: March - 155 g m^{-2}; 1948: March - 100 g m^{-2}
Colima 1947: May - 105 g m^{-2}; 1948: not available
Seasonal low: Chinchina I 1947: October - 50 g m^{-2}; 1948: August - 50 g m^{-2}
Chinchina II 1947: July - 45 g m^{-2}; 1948: July - 30 g m^{-2}
Colima 1947: July - 35 g m^{-2}; 1948: not available

Author: John (1973)
Site: Moist semi-deciduous forest, Ghana
Type of data: Monthly; total, small twigs, and trash
Seasonal high: January to March - 150-160 g dw m^{-2} (1971), 200 g dw m^{-2} (1972)
Seasonal low: June to August - 40-50 g dw m^{-2}
Other data: Monthly solar radiation, wind speed, relative humidity, and rainfall

Authors: Klinge and Rodrigues (1968)
Site: Amazonian terra firma forest near Manaus, Brazil
Type of data: Monthly; leaves and other
Seasonal high: May - 170 g $m^{-2}year^{-1}$
Seasonal low: January - 40 g $m^{-2}year^{-1}$
Other data: Monthly rainfall; May to October is the dry season

Authors: Kunkel-Westphal and Kunkel (1979)
Site: Eastern highlands, Guatamala
Type of data: Monthly; leaves, wood, and reproductive
Seasonal high: April - 7.5 g $m^{-2}d^{-1}$
Seasonal low: July - 1.0 g $m^{-2}d^{-1}$
Other data: Monthly temperature and precipitation

Authors: Lambert, Arnason, and Gale (1980)
Site: Seasonally dry tropical hardwood forest, Belize
Type of data: Monthly; total litter
Seasonal high: June, September - 190 g $m^{-2}month^{-1}$
Seasonal low: February to May - 10-20 g $m^{-2}month^{-1}$
Other data: Monthly precipitation and temperature

Author: Madge (1965)
Site: Dry lowland forest in Ibadan, Nigeria
Type of data: Monthly; leaf and debris
Seasonal high: January-February - 1200 g m^{-2}/2 weeks
Seasonal low: May-September - 100 g m^{-2}/2 weeks
Other data: Monthly precipitation and temperature; rainy season is May to September

Authors: Malaisse et al. (1972)
Site: Miombo woodland, Zaire
Type of data: Monthly; by plant part (total litterfall reported here)
Seasonal high: August-September - 83.4 g m^{-2} (mean for 1968-1970, range = 63.2-106.7)
Seasonal low: January-February - 8.3 g m^{-2} (mean for 1968-1970, range = 5.3-9.9)
Other data: Monthly rainfall, temperature, humidity, evapotranspiration, and total radiation

Authors: Matsumoto and Abe (1979)
Site: Lowland rain forest, Pasoh Forest Reserve, western Malaysia
Type of data: Weekly; by plant part for June to September 1973
Seasonal high: Early August - 3.964 g dw $m^{-2}d^{-1}$
Seasonal low: Mid-September - 0.954 g dw $m^{-2}d^{-1}$

Authors: Medina and Zelwer (1972)
Site: Rancho Grande cloud forest, Venezuela
Type of data: Monthly; total litter
Seasonal high: August - 1.8 g $m^{-2}d^{-1}$
Seasonal low: October - 1.5 g $m^{-2}d^{-1}$
Other data: Monthly rainfall and temperature

Author: Mitchell (personal communication to Bray and Gorham, 1964)
Site: Malaya
Type of data: Monthly; percent litterfall
Seasonal high: February to April - 10%
Seasonal low: August to December - 5%

Author: Nye (1961)
Site: Kade, Ghana
Type of data: Monthly; leaves and other
Seasonal high: March - 160 g $m^{-2}year^{-1}$
Seasonal low: July - 30 g $m^{-2}year^{-1}$

Authors: Swift, Russel-Smith, and Perfect (1981)
Site: Ibadan, Nigeria
Type of data: Monthly; leaf and total
Seasonal high: February - 95 g $m^{-2}month^{-1}$
Seasonal low: June - 18 g $m^{-2}month^{-1}$
Other data: Monthly rainfall and temperature

Author: Tanner (1980)
Sites: Montane rain forest, Jamaica (mor and mull sites)
Type of data: Monthly; leaves and woody materials
Seasonal high: June-August - 20 g $m^{-2}d^{-1}$ (total)
Seasonal low: October-December - 10 g $m^{-2}d^{-1}$ (total)
Other data: Monthly precipitation

Authors: Wiegert and Murphy (1970)
Site: Rain forest, Puerto Rico
Type of data: Semi-annual averages

2.2.2 Tropical Savanna/Grassland

Author: Collins (1977)
Site: Southern Guinea savanna, Nigeria
Type of data: Monthly; wood and leaf
Seasonal high: Wood -- late June-mid-July - 119.4 kg ha^{-1}
Leaf -- January - 682.1 kg ha^{-1}
Seasonal low: Wood -- December - 31.6 kg ha^{-1}
Leaf -- late June-mid-July - 32.4 kg ha^{-1}

Authors: Grunow, Groeneveld, and DuToit (1980)
Site: South African tree savanna, Nylsvley, South Africa
Type of data: Monthly; plant death rate
Seasonal high: March - 3.5 g m^{-2} $week^{-1}$
Seasonal low: October-December - 0.0 g m^{-2} $week^{-1}$

Author: Krishnamurthy (1978)
Site: Grazing land, Khirasara, India
Type of data: Monthly standing dead and litter, above- and belowground
Seasonal high: Live to standing dead - September-November
Standing dead to litter - September-November
Seasonal low: Live to standing dead - June-August
Standing dead to litter - March-August
Other data: Transfer rates are calculated

Authors: Menaut and Cesar (1982)
Sites: Lamto savanna (open and dense sites), Ivory Coast
Type of data: Monthly; leaffall
Seasonal high: Open site -- February - 0.25-0.6 tons ha^{-1} (varies between years)
Dense site -- February - 0.55-1.3 tons ha^{-1} (varies between years)
Seasonal low: Open site -- April-June - 0 tons ha^{-1}
Dense site -- April-June - 0 tons ha^{-1}

Authors: Morris, Bezuidenhout, and Furniss (1982)
Site: Nylsvley savanna, South Africa
Type of data: Weekly; litter input by part and species, and input to standing dead grass
Seasonal high: Litter input -- late June, early July - 10.25 g m^{-2} $week^{-1}$
Grass death -- December - 4.8 g m^{-2} $week^{-1}$
Seasonal low: Litter input -- mid-February - 1 g m^{-2} $weeK^{-1}$
Grass death -- late September, early October - 0.1 g $m^{-2}week^{-1}$
Other data: Monthly soil moisture and temperature

Authors: San Jose, Berrade, and Ramirez (1982)
Site: Trachypogon savanna, Colombia
Type of data: Monthly changes in belowground grass material

2.2.3 Temperate Forest

Author: Bandola-Ciolzyk (1974)
Site: Ispina forest district, Poland
Type of data: Irregular sampling intervals; leaves and other categories
Seasonal high: October-November - 145.7 g m^{-2} during a 19-day period
Seasonal low: December-April - 2.54 g m^{-2} during a 4.5-month period
Other data: Monthly temperatures

Authors: Cole, Gessell, and Dice (1967)
Site: Douglas fir, Washington
Type of data: Monthly; total

Authors: Cramer et al. (1984)
Site: Pinus radiata plantation, Sale, Victoria, Australia
Type of data: Monthly; total litter
Seasonal high: Peaks often occurred in winter, but litterfall was quite variable through the year (perhaps responding to moisture stress)

Author: Danckelmann (1887)
Site: Pinus sylvestris plantation, Germany
Type of data: Monthly
Seasonal high: September - 80-130 g $m^{-2}month^{-1}$
Seasonal low: January-June - 4-7 g $m^{-2}month^{-1}$

Authors: Edwards and Harris (1977)
Site: Liriodendron tulipifera stand, Oak Ridge, Tennessee
Type of data: Monthly; total and by plant part
Seasonal high: October - 100 g m^{-2}
Seasonal low: May-July - 10 g m^{-2}

Author: Gresham (1982)
Sites: Longleaf pine stands, coastal South Carolina
Type of data: Monthly; foliage and wood/fruit
Seasonal high: Total litter: loblolly -- variable, October to December - 1500 g $m^{-2}year^{-1}$
longleaf - variable
Seasonal low: Total litter: loblolly -- January-May - 100 g $m^{-2}y^{-1}$
longleaf -- January-May - 100 g $m^{-2}year^{-1}$

Author: Kendrick (1959)
Site: *Pinus sylvestris* plantation, Cheshire, England
Type of data: Monthly; total litter
Seasonal high: August - 192 g $m^{-2}month^{-1}$
Seasonal low: December-February - 916 g $m^{-2}month^{-1}$

Authors: Lossaint and Rapp (1971a)
Site: *Pinus halepsensis* stands, France
Type of data: Monthly; total and by plant part (June 1965-May 1969)
Seasonal high: July-August - 1000-110 kg ha^{-1}
Seasonal low: Variable; December-January - <50 kg ha^{-1}
September-October - 100 kg ha^{-1}

Authors: Lossaint and Rapp (1971b)
Sites: *Quercus ilex* and *Quercus coccifera* stands, France
Type of data: Monthly; total and by plant part (June 1965-May 1969)
Seasonal high: *Q. ilex* at Rouquet -- variable, but peaks in May - 900-1690* kg ha^{-1}
Q. coccifera at Saint-Gely-Du-Fesc -- April-May - 600-1000* kg ha^{-1}
Q. coccifera at Graebels -- May - 800-1000* kg ha^{-1}
Seasonal low: *Q. ilex* at Rouquet -- variable, generally January-March - <50-100 kg ha^{-1}
Q. coccifera at Saint-Gely-Du-Fesc -- January-February - 50 kg ha^{-1}
Q. coccifera at Graebels -- variable, July-September and September-January - often <100 kg ha^{-1}

Note: * indicates differences between years

Author: Nakane (1980)
Site: Beech/fir forest, central Japan
Type of data: Monthly
Seasonal high: October - 0.0389 tons C $ha^{-1}d^{-1}$
Seasonal low: December-April - 0.00106 tons C $ha^{-1}d^{-1}$
Other data: Monthly temperature

Author: Nakane (1980)
Site: Evergreen oak, central Japan
Type of data: Monthly
Seasonal high: April - 0.03318-0.0496 tons C $ha^{-1}d^{-1}$
Seasonal low: January - 0.0033 tons C $ha^{-1}d^{-1}$

Authors: Nishioka and Kirita (1978)
Site: Warm temperate evergreen oak forest, Minamata, Japan
Type of data: Monthly: total, leaf, branch, and other (1969-1972); minor components such as buds, fruits and seeds, and frass (1969)
Seasonal high: Total -- May - 2-5 g m^{-2} d^{-1}
Leaf -- May - 1.5-4.5 g m^{-2} d^{-1}
Branch -- August-October
Seasonal low: Total -- January-February, July - <2 g $m^{-2}d^{-1}$
Leaf -- October-December - <1 g $m^{-2}d^{-1}$
Branch -- November-July - <1 g $m^{-2}d^{-1}$
Note: Late summer and fall spike in litterfall, particularly for branches, is in response to typhoons

Authors: O'Connel and Menage (1982)
Sites: Two-year-old to several-hundred-year-old karri stands, southwest Australia.
Type of data: Monthly; total litter in 2, 6, 9, 40, and mature year stands; karri litter by plant part in mature stands

Seasonal high: Total litter -- March in stands $\geq$9 years old, December-January in stands $\leq$6 years old (actual value varies with stand age)

Seasonal low: Total litter -- June in stands $\geq$9 years old, July-August in stands $\leq$6 years old

Other data: Nutrient composition of litterfall

Authors: Olson et al. (1961)

Sites: Several forest stands, Oak Ridge, Tennessee

Type of data: Bimonthly; total litter

Seasonal high: Pine -- September-October - 142 g m^{-2}

Oak-hickory-tulip -- September-October - 268 g m^{-2}

Seasonal low: Pine -- July-August - 68 g m^{-2}

Oak-hickory-tulip -- January-February - 26 g m^{-2}

Other data: Monthly litter moisture content and air temperature in oak stand

Authors: Peterson and Rolfe (1982)

Sites: Floodplain forest (Acer) and upland forest (Quercus), central Illinois

Type of data: Monthly; by plant part

Seasonal high: Upland -- October, 2000-3000 kg ha^{-1} (leaves)

Floodplain -- October - 1500-2000 kg ha^{-1} (leaves)

Seasonal low: Upland -- January-September - near 0 kg ha^{-1} (leaves)

Floodplain - January-July - near 0 kg ha^{-1} (leaves)

Note: Considerable spring and fall woodfall occurs in upland stand (i.e., in March as the result of an ice storm)

Author: Pressland (1982)

Site: Eucalypt forest, Mt. Duval, New South Wales, Australia

Type of data: Monthly; total and by plant part

Seasonal high: December-January - 800-1000 kg ha^{-1} (varies from year to year)

Seasonal low: July - <100 kg ha^{-1}

Other data: Monthly solar radiation, wind, temperature, soil water content, precipitation, and pan evaporation; leaf litterfall as a function of mean daily temperature, solar radiation, and soil water; litter decomposition half-lives

Authors: Sollins, Reichle, and Olson (1973)
Site: Liriodendron stand, Oak Ridge, Tennessee
Type of data: Irregular sampling intervals; leaves, twigs, and flowers
Seasonal high: October - 73 g $m^{-2}week^{-1}$
Seasonal low: February-April - 6.3 g m^{-2} per 12-week period
Other data: Monthly rainfall

Authors: Turnbull and Madden (1983)
Sites: Two Eucalyptus stands, one mixed forest, one Eucalyptus shrubland, southern Tasmania
Type of data: Six-week intervals; total litter
Seasonal high: February-March - 250-1150 kg ha^{-1} (varies with stand and year)
Seasonal low: August - 50 kg ha^{-1}
Other data: Seasonal mean maximum temperature

Authors: Witkamp and van der Drift (1961)
Sites: Mixed and oak forests, Netherlands
Type of data: Monthly; total litter
Seasonal high: Mixed -- October - 148 g $m^{-2}month^{-1}$
Oak -- November - 172 g $m^{-2}month^{-1}$
Seasonal low: Mixed -- January-June - 0 g $m^{-2}month^{-1}$
Oak -- January-June - 0 g $m^{-2}month^{-1}$

2.2.4 Temperate Grassland

Authors: Sims and Singh (1978a,c)
Sites: Western United States: Washington, Montana (2 sites), North Dakota, South Dakota, Colorado, Kansas, New Mexico, Oklahoma, Texas
Type of data: Intervals during growing season; standing dead, litter (recent and old), belowground material
Other data: Annual abiotic data

Author: Sauer (1978)
Site: Pawnee site, Colorado
Type of data: Intervals during growing season; crown death, root death, fall of standing dead

Authors: Warembourg and Paul (1977)
Site: Southwestern Saskatchewan
Type of data: Monthly during growing season; transfers from green to yellow biomass

2.2.5 Boreal Coniferous Forest

Authors: Larsson and Tenow (1980)
Site: Mature Scots pine forest, Ivantjarnsheden, Sweden
Type of data: Biweekly, needle fall, rate of green litter production, and cumulative green litter production
Seasonal high: Cumulative needle fall -- October - 875 kg dw ha^{-1}
Litter production rate -- late July - 0.045 kg dw $ha^{-1}d^{-1}$
Seasonal low: Cumulative needle fall -- May - 0 kg dw ha^{-1}
Litter production rate -- early July - 0.001 kg dw $ha^{-1}d^{-1}$
Note: Rate of needle fall accumulation greatest in September
Other data: Five-day interval mean air temperature and precipitation

Author: Satoo (1971)

Site: 20-year-old *Pinus densiflora* stand, Japan

Type of data: Monthly; total litter

Seasonal high: November - 1.25 tons $ha^{-1}month^{-1}$

Seasonal low: January-February - 0.1 tons $ha^{-1}month^{-1}$

2.2.6 Boreal Tundra

Authors: Bunnell and Scoullar (1981)

Site: Point Barrow, Alaska

Type of data: Weekly standing dead and litter standing crop

Seasonal high: Standing dead -- April-June - 300 g m^{-2}

Seasonal low: Standing dead -- January - 90 g m^{-2}

3. DECOMPOSITION ON A SEASONAL BASIS

3.1 COMPARTMENT MODELS OF DECOMPOSING ORGANIC MATTER

Numerous useful applications of compartmental analysis have been made in modeling organic matter decomposition. These are reviewed here from the perspective of incorporation into models of carbon flow in terrestrial ecosystems.

3.1.1 One-compartment Models

Following Jenny, Gessel, and Bingham (1949), Olson (1963b, 1964) introduced the equation

$$\frac{dX}{dt} = L - kX \tag{29}$$

to describe the disappearance of dead organic matter, X, due to decomposition. The variable X can be given a variety of units; oven dry weight, organic carbon, or energy, for example, each measured per unit area, such as square meters. The independent variable t, representing time, may have units of hours, days, weeks, months, or years. The parameter L in Eq. (29) stands for the input of fresh organic matter and has units of mass or energy per unit time. The parameter k is the decay rate coefficient, with units of inverse time.

If the input of fresh organic matter (litterfall, dying roots, etc.) and the decay coefficient can be assumed constant, then Eq. (29) has a simple solution:

$$X(t) = X_0 e^{-kt} + \frac{L}{k}(1 - e^{-kt}) \quad , \tag{30}$$

where X_0 is the initial value to X(t) at time t = 0. As t approaches infinity, X(t) approaches a steady-state value, L/k (Fig. 8a). Equation (30) is useful only for representing changes of soil organic

matter during time periods over which L and k can be regarded as constants. In most environments, both L and k vary significantly on a scale of months.

The simplest representation of seasonality is for all litterfall to occur at an instant of time each year;

$$L(t) = L_0 \sum_{n=1}^{\infty} \delta(t - n) \quad , \tag{31}$$

where $\delta(\ )$ is the Dirac delta function. It is assumed that the litterfall pulse occurs at the start of each year. In this case the solution of Eq. (29) is

$$X(t) = X_0 e^{-kt} + L_0 \sum_{n=1}^{N} e^{k(n-t)} \quad , \tag{32}$$

where N is the total number of years since t = 0 (see Fig. 8b).

The dynamics of decomposition shown in Fig. 8b, however, are also an oversimplification of actual seasonality. The parameters L and k can both, in general, vary continuously throughout the year. If both are allowed to have arbitrary dependence on t, the general solution of Eq. (29) must be used; that is,

$$X(t) = X_0 e^{-T} + e^{-T} \int_0^t L(t')e^{T'}dt' \quad , \tag{33}$$

where

$$T = \int_0^t k(t'')dt'' \quad ,$$

and where T' is obtained by replacing t by t' in T. We discuss later the specific types of seasonal variations that can occur in the decay coefficient, k.

ORNL-DWG 84-15258

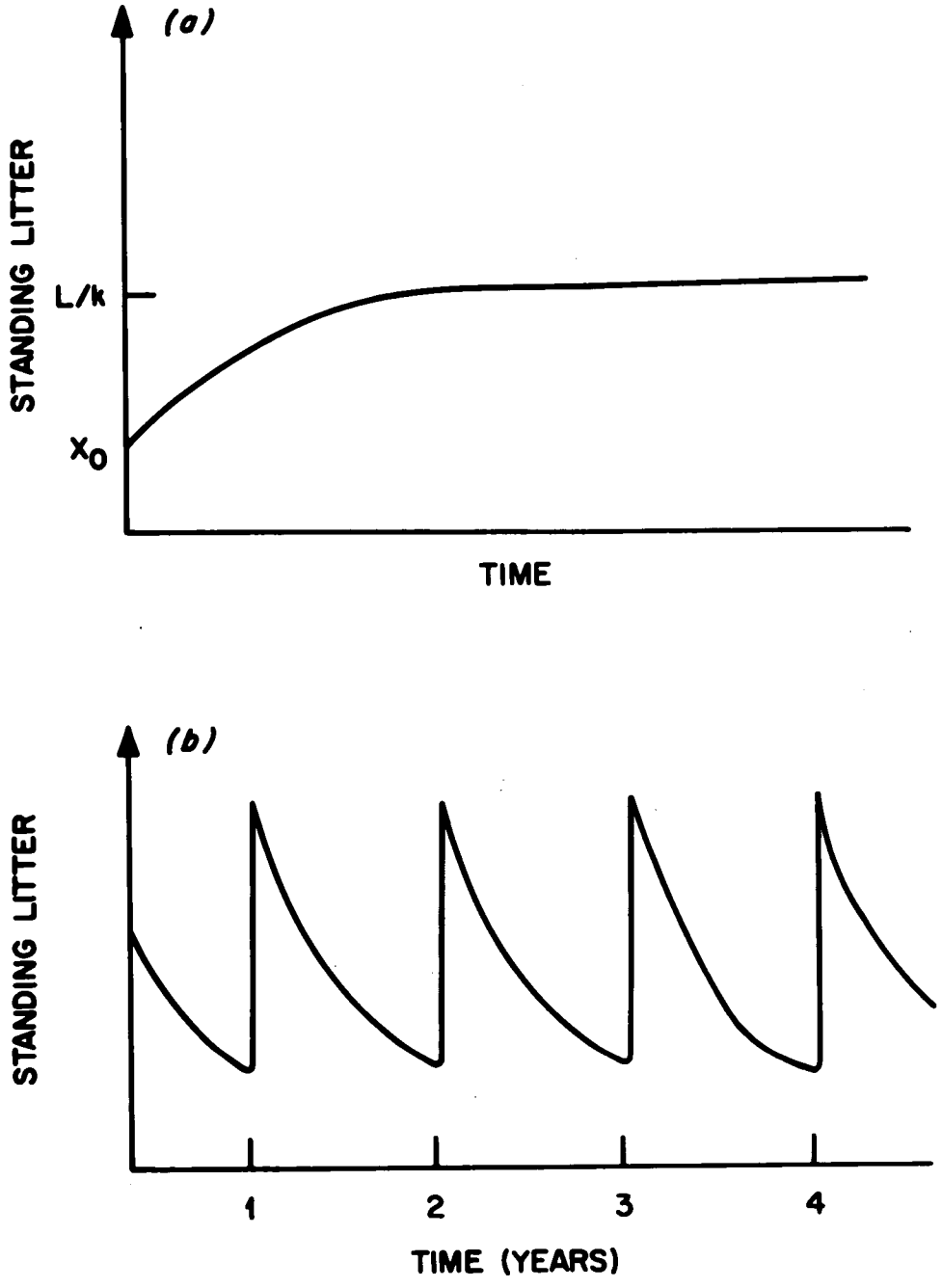

Fig. 8. Results of simple one-compartment model for (a) continuous litter input, (b) pulsed input.

3.1.2 Two-Compartment Cascade Models

Most empirical evidence suggests that the simple one-compartment model described above is only approximately accurate in describing the breakdown of dead plant material. There are several reasons for this, a few of which may be alleviated by the use of more complex models. One important reason is that even under uniform environmental conditions, the decomposition of litter material does not proceed uniformly. Initially, the more vulnerable material decomposes at a rapid rate, leaving a resistant residue that decays much more slowly.

A further step in model complexity that allows one to describe this "two-time scale" phenomenon is the addition of a second compartment (Fig. 9). This compartment, into which the resistant litter residue is assumed to be translocated, can be termed "soil organic matter."

Models in which material passes through a succession of compartments are termed "cascade models." Thomas and Huggett (1980) described a two-compartment cascade decomposition model. The equations for this model are:

$$\frac{dX_1}{dt} = L_{10} - (k_{10} + k_{12})X_1 \tag{34a}$$

$$\frac{dX_2}{dt} = L_{20} + k_{12}X_1 - k_{20}X_2 \quad . \tag{34b}$$

In Eqs. (34a,b) X_1 is aboveground litter and X_2 is soil organic matter. L_{10} is the input to aboveground litter (from litterfall), L_{20} is direct input into soil matter through root sloughage, and k_{12} is the coefficient of translocation from litter to soil. The parameters k_{10} and k_{20} are decomposition coefficients. Because the soil organic matter is much more resistant to decay than the litter, $k_{20} << k_{10}$.

Thomas and Huggett (1980) presented some parameterizations of Eqs. (34a,b) under the assumption that L_{10}, L_{20}, k_{10}, k_{20}, and k_{12} are all constants. This will not be the case in realistic

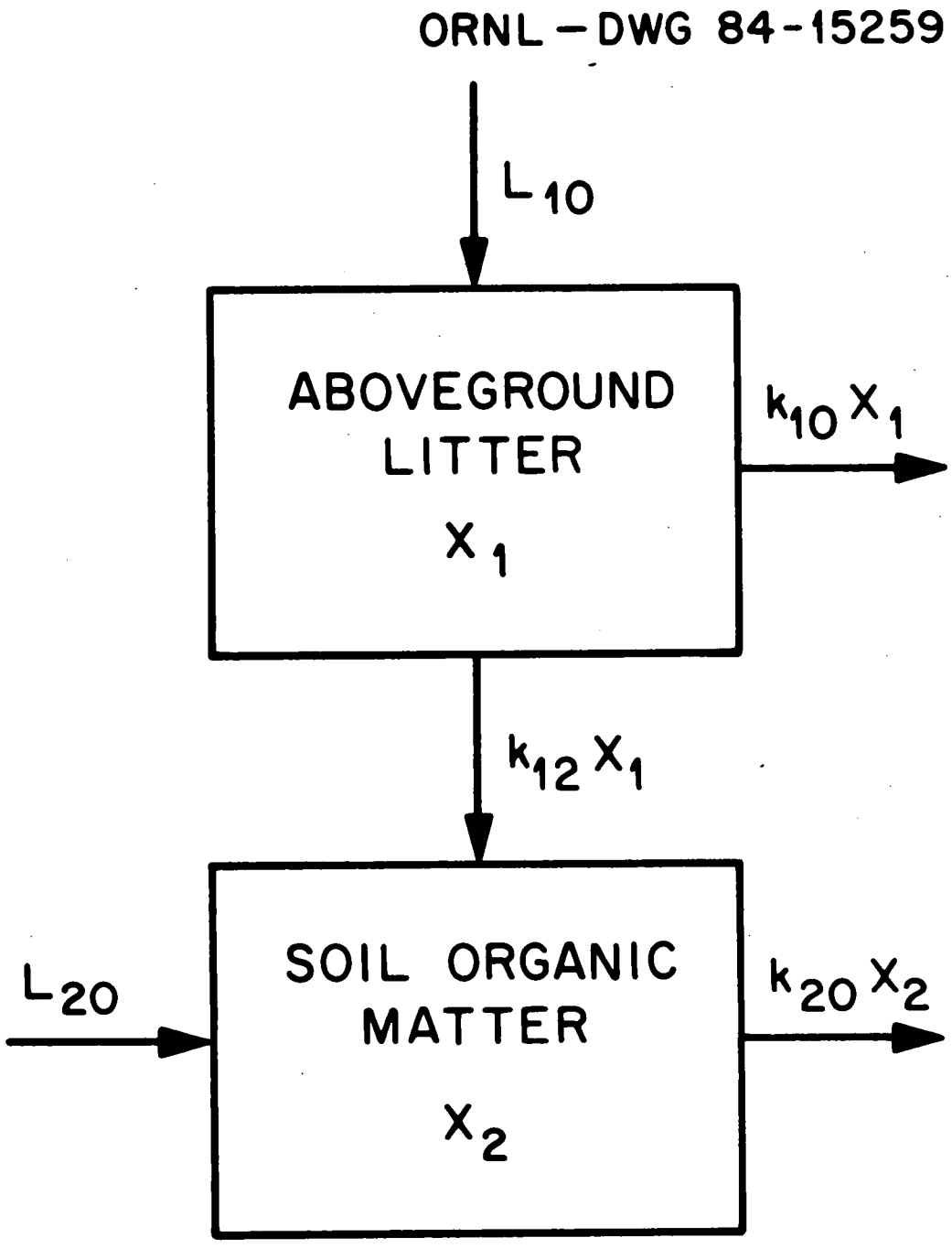

Fig. 9. Two-compartment decomposition model.

seasonal models. If the temporal variations in the parameters can be determined, then X_1 and X_2 can be solved for, as

$$X_1(t) = X_{10}e^{-T_1} + e^{-T_1}\int_0^t L_{10}(t')e^{T'_1}\,dt' , \qquad (35a)$$

$$X_2(t) = X_{20}e^{-T_2} + e^{-T_2}\int_0^t [L_{20}(t') + k_{12}(t')X_1(t')]e^{T'_2}dt' , \qquad (35b)$$

where

$$T_1 = \int_0^t [k_{10}(t'') + k_{12}(t'')]dt'' , \qquad T_2 = \int_0^t k_{20}(t'')dt'' ,$$

and where T_1' and T_2' are obtained by substituting t' for t in T_1 and T_2, respectively.

3.1.3 Three-Compartment Cascade Models

Nakane (1980) has formulated a three-compartment cascade decomposition model for the explicit purpose of modeling seasonal dynamics of soil organic carbon (Fig. 10). The equations are a straightforward extension of the one- and two-compartment models [Eqs. (29) and (34)]. Below, Nakane's model is presented, though in our own, not Nakane's notation:

$$\frac{dX_1}{dt} = L_{10} - (k_{10} + k_{12})X_1 , \qquad (36a)$$

$$\frac{dX_2}{dt} = k_{12}X_1 - (k_{23} + k_{20})X_2 , \qquad (36b)$$

$$\frac{dX_3}{dt} = L_{03} + k_{23}X_2 - k_{30}X_3 . \qquad (36c)$$

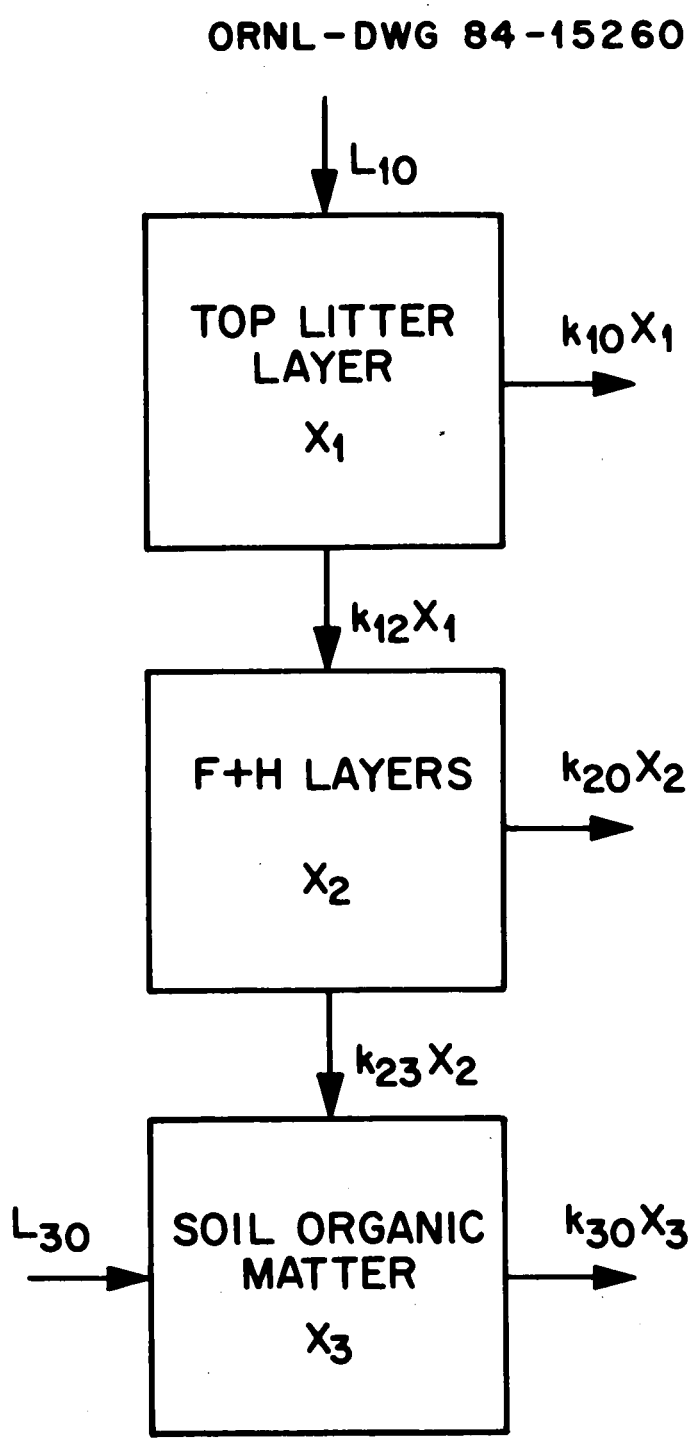

Fig. 10. Three-compartment decomposition model.

In these equations the new symbols are L_{03} and k_{23}, where L_{03} is the input to the bottom, or soil, layer, from fine roots, and k_{23} is the coefficient of translocation from the F + H layer (X_2) to soil organic matter (X_3).

The solution of Eqs. (36) is a simple generalization of Eqs. (35), and we do not produce it here. The significance of this particular model is that, for certain ecosystem types, Nakane (1980) was able to express the parameters as functions of time (indirectly, through dependence on temperature). We talk about this in detail later.

3.1.4 Multi-Layered Cascade Models

The degree of disaggregation of the litter-soil complex (one, two, or three compartments) is an arbitrary formulation. In principle the model may be refined to any degree by adding further compartments (Olson 1963a,b, 1964). Prusinkiewicz (1978, 1980) formulated a model in which the forest floor was composed of any number of horizons (Fig. 11).

Suppose that at the beginning of a year the amount of carbon (e.g., g m^{-2}) in the ith layer is $X_{0,i}$. Then, assuming a constant rate of decomposition, k_i, the amount of carbon at the end of the year is

$$X_{1,i} = X_{0,i}e^{-k_i} \quad . \tag{37}$$

Each layer undergoes decay with a different rate constant, k. At the end of the year organic matter in a particular layer has not only lost weight due to decomposition but has also undergone a transformation that changes its characteristics to those of the next lower layer. Therefore, Prusinkiewicz's (1980) model had an amount P_{i-1} transferred from layer i-1 to layer i at the end of the year. In steady state, the amount transferred into layer i, P_{i-1}, must balance the amount lost from layer i, both through decomposition,

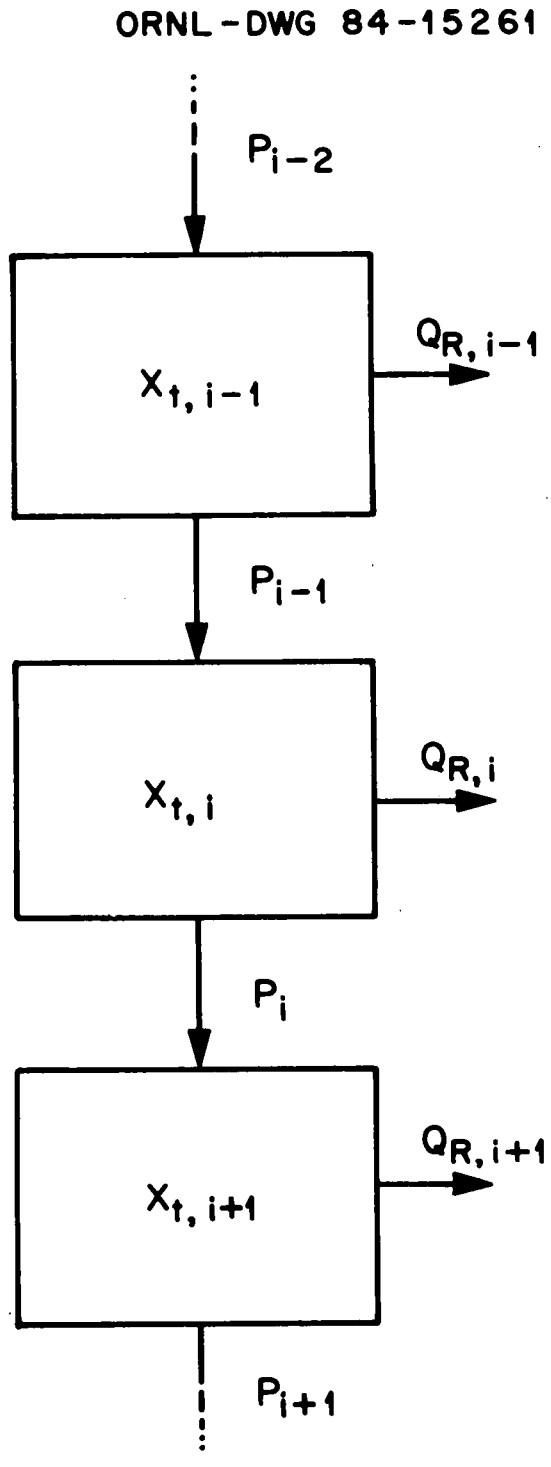

Fig. 11. Multi-compartment soil decomposition model. The transfers occur at yearly intervals.

$Q^*_{Ri} = X^*_{0,i} - X^*_{i,i}$, and transfer out of i to i + 1, P_i. Therefore,

$$Q^*_{Ri} + P^*_i = P^*_{i-1} \quad . \tag{38}$$

Prusinkiewicz's (1980) multi-layered model is somewhat similar to Leslie matrix population models, with the layer standing crops, $X_{t,i}$, being the analogs of year class members in the population models. It is possible to transform Leslie matrix models from discrete to continuous models by considering the limit of decreasing size and time scales. Nakane (1978) did this for forest floor decomposition.

Instead of the discrete function, $X_{t,i}$, Nakane (1978) used a continuous function, X(z,t), to describe carbon concentration at depth z at time t. A single partial differential equation can be used to summarize the dynamics;

$$\frac{\partial X}{\partial t} + \frac{\partial}{\partial z}(DX) = -kD \quad , \tag{39}$$

where k(z) is the rate of decomposition as a function of depth and D is the relative rate of downward movement of soil organic carbon. Nakane and Shimozaki (1978) assumed that k and D had the following dependences on depth:

$$k = k(z) = 1/(az + b) \tag{40a}$$

$$D = D(z) = 1/(pz + b) \quad . \tag{40b}$$

With these assumptions Eq. (39) is solvable. Given a surface boundary condition representing constant litter input,

$$X(0,t) = X_0 \quad ,$$

the dependence of X(z,t) on time and depth is

$$X(z,t) = X_0(1 + z/\alpha)(1 + z/\beta)^{-\gamma(\alpha-\beta)}e^{-\gamma z} \tag{41}$$

where

$$\alpha = q/p$$

$$\beta = b/a$$

$$\gamma = p/a \quad .$$

This model can be extended to include the effects of root sloughage into soil layers by adding a term $L_R(z)$ to the right-hand side of Eq. (39). An analytical solution is possible for arbitrary dependence on z and was given by Nakane (1978). The z-dependence of $L_R(z)$ can be estimated by a knowledge of the root distribution and can be approximated by the general form

$$L_R(z) = L_0 \exp(-gz^n) \quad . \tag{42}$$

In practical terms, because of the number of parameters that would need to be estimated, it would be difficult to build seasonality into either the multi-layered cascade models of Prusinkiewicz (1980) or the partial differential equation model of Nakane (1978). For the partial differential equation model the problem is more acute because the model cannot be solved analytically when the parameters are time-dependent.

3.2 EFFECTS OF CLIMATIC AND SUBSTRATE FACTORS ON DECOMPOSITION

Decomposition in terrestrial systems is primarily aerobic and is carried out by soil bacteria and fungi (microflora), though numerous microfaunal species (protozoans, etc.), mesofaunal species (termites, dipteran larvae, etc.), and macrofaunal species (large litter-feeding arthropods, earthworms, etc.) also play a role. The functioning of this web of decomposer organisms depends on soil conditions such as moisture, temperature, pH, and O_2. Hence, where these conditions change seasonally, decomposition rates will also vary seasonally if any of these conditions are limiting factors. Because rainfall and

temperature change seasonally for many terrestrial systems, their inclusion in models of decomposition is vital.

Among the early models of the effects of soil moisture and temperature on decomposer respiration is that of Bunnell and Tait (1974); see also Bunnell et al. (1977). This model represented decomposer respiration, R(T,M), as a function of temperature, T (°C), and soil moisture, M (% of water content):

$$R(T,M) = \frac{M}{a_1 + M} \frac{a_2}{a_2 + M} a_3 a_4^{(T-10)/10} \tag{43}$$

The first factor, $M/(a_1 + M)$, is related to the water requirements of the decomposer organisms. In the absence of water, no respiration can occur, while, for high enough amounts of M, the effect of increased M on respiration asymptotes to unity. The second factor, $a_2/(a_2 + M)$, accounts for the limitation on aerobic respiration owing to a high percentage of water. The final factor,

$$a_3 \times a_4^{(T-10)/10} ,$$

is the Q_{10} relationship, where a_4 is the Q_{10} coefficient.

While Bunnell and Tait's (1974) model was based explicitly on a biological conception of the way soil moisture and temperature should affect decomposer respiration, other models of the functional relationship have also been presented.

Edwards (1975) related soil respiration of a mixed temperate deciduous forest floor, Y, to mean daily litter temperature, T,

$$Y = b_0 + b_1 T + b_{11} T^2 , \tag{44}$$

and found that only the coefficient b_{11} was statistically different from zero. No statistically significant dependence of Y on soil moisture was found; unlike nonlinear models such as Eq. (43), linear

models such as Eq. (44) can be evaluated for the statistical significance of each variable.

Nakane (1978), using data from a cool, temperate beech/fir forest, fitted the decomposition rates to temperature alone;

$$k_{10} = k_{10,0}e^{\lambda_L T} , \tag{45a}$$

$$k_{20} = k_{20,0}e^{\lambda_{FH} T} , \tag{45b}$$

$$k_{30} = k_{30,0}e^{\omega T} . \tag{45c}$$

In drier ecosystems, where soil moisture would be assumed to have a limiting influence, statistical significance of the effect of moisture on decomposition has been found. For example, Upandhyaya and Singh (1981), working in a tropical grassland, reported a relationship between organic matter remaining after a year and both temperature and soil moisture:

$$Y = 0.24 + 1.22 \bullet M + 0.037 \bullet T \tag{46}$$

Kowalenko, Ivarson, and Cameron (1978), working at a site in southern Ontario, regressed CO_2 evolution against temperature, water content, and the product of these two;

$$CO_2 \text{ evolution} = a_0 + a_1 T + a_2 T \bullet M + a_3 M . \tag{47}$$

Actual evapotranspiration (AET) may be a better predictor of decomposition rates than temperature or soil moisture alone. Meentemeyer (1978) has shown, based on 24 sites, that

$$\log(\text{annual decomposition}) = 1.7 - 0.001575(\text{AET}) , \tag{48}$$

with an r^2 of 0.96.

In addition to environmental effects such as moisture and temperature, the type of resource itself affects the breakdown of litter. A wide variation in decomposition rates exists even among leaf types. Cromack (1973) showed that the percentage of lignin in the leaf was a good indicator of the time required for decomposition. If Y is the weight loss and X the lignin content, then

$$Y = 1.246 + 0.0267 \bullet X \quad (r^2 = 0.89) \quad . \qquad (49)$$

To take into account different substrate types requires considering parallel as well as cascading compartments. Figure 12 shows residues from initial rapid decomposition compartments in parallel going into common pools in which slower decomposition proceeds.

We see then that representing the decomposition of organic matter can entail extremely complex modeling. Practical modeling of this process for seasonal carbon flux models will necessitate a balance between accuracy and simplicity. In the next section, we briefly review the treatment of decomposition in extant seasonal, ecosystem-oriented models. An awareness of how these models deal with the complexity of decomposition and strike the balance mentioned above will facilitate future model development.

3.3 SEASONAL DECOMPOSITION IN ECOSYSTEM-ORIENTED MODELS

3.3.1 Tropical Rain Forest

In their model of a Malaysian rain forest, Bandhu et al. (1973) modeled decomposition as input to soil organic matter from woody litter, non-woody litter, and roots, with respiration losses from the four compartments. The input involved linear constant coefficients; hence, decomposition flux varied only with variations in state variables imposed by seasonal variations in primary production.

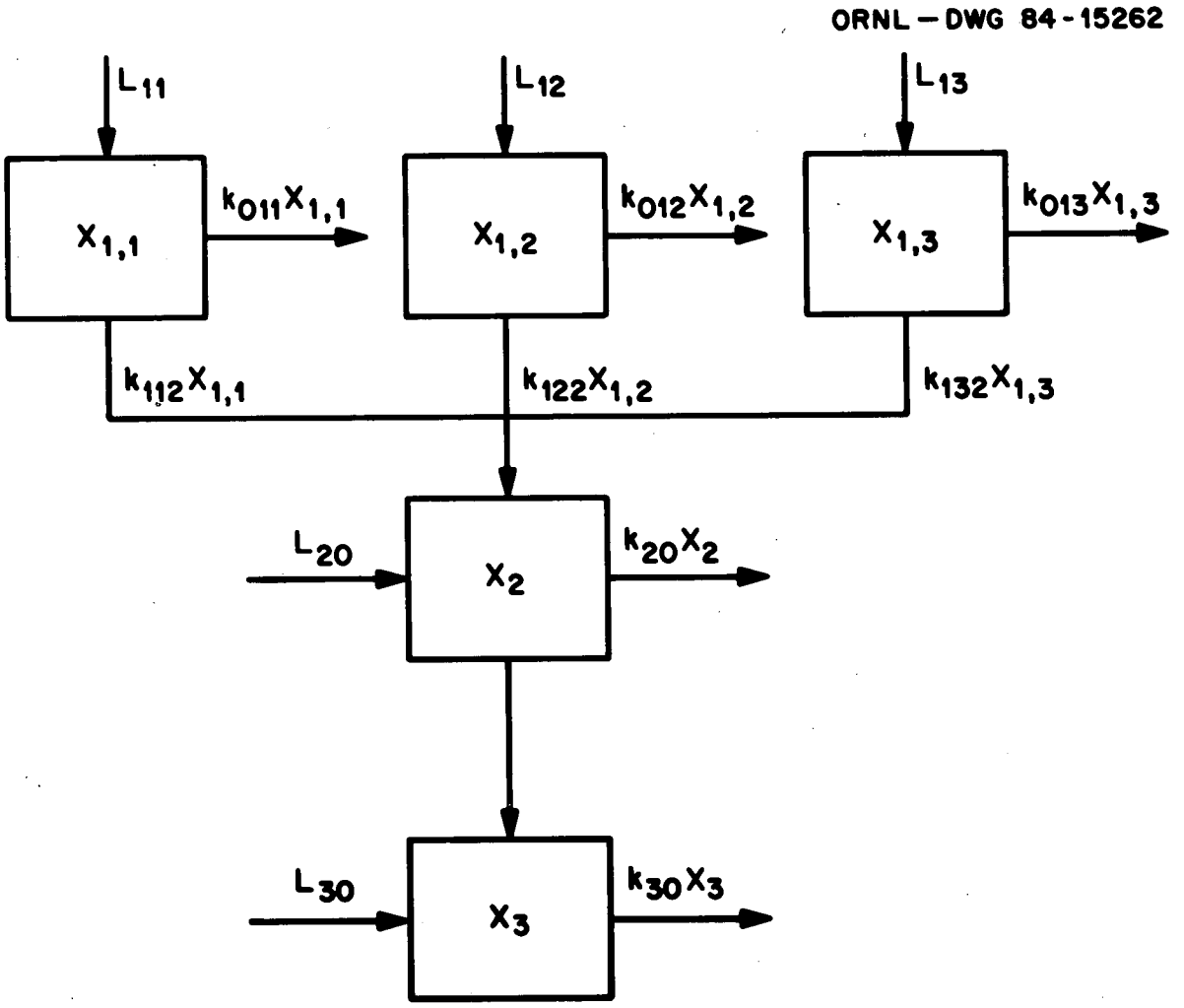

Fig. 12. Decomposition model in which substrates of differing decay rates are considered in the first stage of decomposition.

Decomposition was treated in a similar, non-mechanistic manner in Bandhu et al.'s (1973) model of the miombo forest except that input to soil organic matter from woody and non-woody litter involved time varying coefficients. Root input and respiration were described with constant rate coefficients. The seasonal modeling of decomposition in tropical rain forests lags behind the progress made in other biomes, as does rain forest modeling in general.

3.3.2 Tropical Grassland and Savanna

The seasonal herbage dynamic models for Indian grasslands by Singh (1973) and Krishnamurthy (1978) treated decomposition as the flux of organic matter from belowground biomass and litter to a sink pool. This flux involved time varying coefficients for four time periods. The processes behind this flux were not modeled.

Furniss et al. (1982) presented a considerably more detailed model of decomposition in an African tropical savanna. The model divided decomposing material into particle classes, distinguishing material by age, origin, and size. Each particle class was further divided into chemical constituents. The model followed the mass of a given constituent through the successive particle classes. Decay rates were affected by temperature and litter moisture content, and the decay of constituent j of particle class i, S_{ij}, was described by the differential equation

$$\frac{dS_{ij}}{dt} = S_{ij}[1 - \exp(-a_{ij}w)] \quad , \qquad (50)$$

where a_{ij} is a distinct decay rate for each constituent and particle class and w is a weather effect function of temperature and moisture.

To simulate CO_2 release during the decomposition process, a respiratory coefficient was defined for each of four organic constituents, and as the mass of each decayed a corresponding mass of CO_2 was evolved. The model also included weather-mediated physical disintegration, fall of standing dead according to a season-dependent function, and termite consumption and respiration.

The Furniss et al. (1982) model was reasonably complicated, involving 133 compartments. However, the authors discussed means of "collapsing" the model to suit incorporation as a submodel in an ecosystem model. They suggested that the number of compartments might be reduced to twelve.

3.3.3 Temperate Deciduous Forest

The decomposition submodel of Sollins, Reichle, and Olson's (1973) temperate deciduous forest model involved a forest floor of four horizons: an O_1 layer characterized by relatively undecomposed leaf and reproductive parts and fallen branches and boles, an O_2 layer characterized by fractured litter from the O_1 layer, a mineral soil layer extending from 0 to 10 cm in depth, and a mineral soil layer from 10 to 60 cm. Decomposition was modeled separately for each layer, but there was also flux downwards from the layers above. Decomposers were not modeled directly; they were considered collectively or functionally in loss terms for the different layers or substrates. The rate of change in the O_1 layer, for example, was given by

$$\dot{Q}_{17} = L_A + L_B + A_{132}Q_{13} + (1 - A_{152})C - (R_{17} + A_{1719})F_{TM}Q_{17} + 0.38D \quad (51)$$

and

$$\dot{Q}_{18} = A_{141}Q_{14} + 0.62D - (R_{18} + A_{1819})F_{TM}Q_{18} , \quad (52)$$

where Q_{17} is the mass of leaf and reproductive material litter and $\dot{Q}_{17}$ is the continuous rate of change of that quantity; Q_{18} is the mass of fallen branch and bole and $\dot{Q}_{18}$ is the rate of change in that quantity; Q_{13} is the mass of groundcover; Q_{14} is the mass of standing dead; L_A, L_B, and L_C are leaf litterfall from various compartments; C is the summation of leaf consumption rates; D is the summation of woody litterfall; F_{TM} is a function of the product of temperature and moisture; and the As and Rs are annual rate constants for compartmental flux and respiration, respectively.

Change in the O_2 layer was modeled similarly with input from the O_1 layer and losses to respiration and flux to the upper mineral soil horizon. This soil horizon also received input from sloughing roots and woody tissue. The deeper soil horizon received material from the shallower horizon and was modeled by a constant annual rate of change.

The TEEM model of Shugart et al. (1974) considered only three layers in the forest floor: an O_1 and an O_2 plus a third, O_3, layer of mixed litter and mineral soil. This compartment model, described by differential equations, treated respiration losses from decomposing material as a function of microbial response to temperature and moisture. The model incorporated the increased resolution of cryptozoan food webs and consumption-egestion processes. For example, the change in the O_1 layer, X_{01}, was described by

$$X_{01} = \sum_i L_i - R_{L1}(t)X_{01} - \sum_i F_{M_i} + E_c \quad , \tag{53}$$

where L_i is the input of litter from the ith primary producer compartment, $R_{L1}(t)$ is the litter respiration rate parameter, F_M is the feeding of the ith forest floor cryptozoan, and E_c is the input of excretory loss from a consumer submodel. This model also involved parameters describing the physical mixing of litter between the horizons.

Andersson et al. (1973) treated decomposition with much coarser resolution. In their model, decomposers received input from leaf litter, wood litter, standing dead, and dead roots. The dead material was then "decomposed" via a constant linear flux of organic matter to soil and back to the litter layer and a temperature-regulated respiration flux. Input to decomposers involved constant transfer coefficients except for the temperature and soil moisture regulation of the flux from leaf litter to decomposers.

3.3.4 Temperate Grassland

The decomposition submodel of ELM, the US/IBP Grassland Biome ecosystem model described by Hunt (1978), involved 13 substrate state

variables. Flows from feces, aboveground biomass, and belowground biomass from three depths were divided into labile and resistant material (a strategy designed to deal with heterogeneous substrates). Belowground humic material at the three depths completed the set of 13 substrates. The model involved active and inactive decomposers (treated as microbes) for each of the four main material pools, a total of eight decomposer state variables. The growth and activity of the decomposers were directly simulated.

The decomposition rates for labile and resistant components were each products of a maximum decomposition rate and functions describing the effect of environmental factors,

$$k' = r_k \bullet e_m \bullet e_t \bullet e_N \quad , \tag{54a}$$

$$h' = r_k \bullet e_m \bullet e_t \bullet e_N \quad , \tag{54b}$$

where k' is the loss rate of labile components; h' is the loss rate of resistant components; r_k and r_h are maximum rates of loss for labile and resistant components, respectively; and e_m, e_t, and e_N are functions (ranging in value from 0 to 1) describing the effect of moisture, temperature, and nitrogen, respectively. Decomposer biomass was determined by energetic considerations, and the release of CO_2 through microbial respiration, r_m, was given by

$$r_m = E \bullet b + (1 - Y)(d - E \bullet b) \quad , \tag{55}$$

where E is the temperature dependent maintenance energy requirement, b is active decomposer biomass, Y is the maximum growth yield, and d is the amount of material decomposed. The model also considered leaching and decomposer mortality. An earlier version of the submodel (Anway et al. 1972) was similar but did not consider humic material or distinguish between active and inactive decomposers.

Parton and Singh's (1976) (also see Parton, Singh, and Coleman 1978) model of underground biomass dynamics dealt with the decomposition of litter, crowns, juvenile roots, nonsuberized roots,

and suberized roots, but did not model decomposers directly. For example, the decomposition of dead root biomass was described by

$$R^D_{ij} = D_j \bullet [\min(M^D_i, T^D_i)] \bullet D_{ij} \bullet D^D_i , \qquad (56)$$

where R^D_{ij} is the decomposition rate of the jth (j = 1, 3) root type in the ith (i = 1, 6) soil layer; D_j is the maximum turnover rate of the jth root type; M^D_i is the soil water control parameter in the ith soil layer; T^D_i is the temperature control parameter in the ith soil layer; D_{ij} is the biomass of dead roots of type j in the ith soil layer, and D^D_i is the depth control parameter for the ith soil layer. The decomposition of litter was modeled with the equation for dead root decomposition, Eq. (56), with litter biomass replacing dead root biomass. Litter decomposition was affected by soil water tension in the top soil layer and by soil temperature at 0 cm. The model assumed that decomposition of litter proceeded at 50% (Parton and Singh 1976) to 75% (Parton, Singh, and Coleman 1978) of the decomposition rate for nonsuberized roots in the top soil layer.

The model of decomposition in temperate grasslands presented by Cale and Waide (1980) involved 7 substrates, 11 decomposer compartments distinguished by broad taxonomic and trophic similarities, and a nitrogen pool. Temperature, soil moisture, and some nitrogen limitation were included as environmental driving variables. The model also involved a metabolic growth model for the decomposers.

Other decomposition models or submodels developed for temperate grasslands include those of Wielgolaski, Haydock, and Connor (1972), Patten (1972), and Bledsoe et al. (1971).

3.3.5 Northern Coniferous Forest

Bosatta (1980) described the decomposition module (DECOM) of the carbon-nitrogen model (N1NIT) developed as part of the Swedish Coniferous Forest Project. In this model, litter and humus layers were combined, and three substrates were considered: organic carbon (C_1)

in carbon-nitrogen compounds (e.g., proteins), organic carbon (C_2) in carbon-carbon compounds (e.g., cellulose), and organic nitrogen (N_1) in carbon-nitrogen compounds. Earlier, Berg and Bosatta (1976) considered several organic substrates, but they found that the variables of interest were not sensitive to those subdivisions. In the Bosatta (1980) model, a single decomposer compartment assimilated carbon from the three substrates. Carbon was lost from the compartment through the death of decomposers returning carbon to substrate pools, mineralization, and respiration. Rate processes were environmentally influenced by soil temperature, soil water content, water infiltration, and water percolation. The inputs of the carbon compounds, C_1 and C_2, were time-dependent input driving variables.

The decomposer carbon assimilation rate, A_C, was described by the equation

$$A_C = (f_C \bullet G \bullet B)/e = P_C/e \quad , \tag{57}$$

where f_C is the carbon fraction of decomposer biomass, G is the specific production rate of decomposers, B is decomposer biomass, P_C is the rate of carbon incorporation, and e is the carbon production/assimilation ratio. The decay rate of C_1, A_{C_1}, was given by

$$\begin{aligned} A_{C_1} &= r_1 \bullet P_{N_1} && \text{if } r_1 > r_c \text{ (nitrogen is limiting)} \\ &(A_C \bullet C_1)/(C_1 + C_2) && \text{if } r_1 \leq r_c \text{ [carbon (energy) is limiting]} \quad , \end{aligned} \tag{58}$$

where r_1 is the carbon-nitrogen ratio of C-N compounds, P_{N_1} is the incorporation rate of organic nitrogen, and r_c is the "critical" carbon-nitrogen ratio. The decay rate of C_2 substrate was the difference between the carbon assimilation rate and the rate of C_1 decay. Respiration was taken as the difference between the rate of carbon assimilation and rate of carbon incorporation.

The model CONIFER (Coniferous Forest Biome Modeling Group 1977) described the flux of log litter, woody litter, leaf litter, and dead insects to fine litter. Fine litter in turn provided input along with dead roots to the rooting zone organic matter compartment. From there, carbon flowed to subsoil organic matter. The various fluxes were influenced by soil moisture, litter moisture, and litter temperature. For example, the foliage litter decomposition rate (the rate of flux from leaf litter to fine litter) was given by

$$G_{81} = B_{62} \bullet G_{69} \bullet X_{19} \quad , \tag{59}$$

where G_{81} is the rate of flux from leaf litter to fine litter, X_{19} is foliage litter carbon, G_{69} is the effect of temperature and moisture, and B_{62} is a rate constant. Other flux rates were modeled similarly. Carbon was lost in the form of CO_2 via respiration from the litter compartment and the root zone organic matter.

The decomposition of organic matter in the seasonal coniferous forest model of Field et al. (1973) was treated as the flux of biomass from litter (woody and nonwoody) and roots (canopy and groundcover) to organic soil and/or mineral soil, and from mineral soil to subsoil. Respiratory losses were simulated for litter, organic soil, and mineral soil. This respiration was a function of temperature and soil moisture. Flux from litter to organic soil was simply the difference between litter input (controlled by a seasonal switch) and respiration, while fluxes between soil horizons involved constant rate coefficients.

3.3.6 Boreal Tundra

The ABISKO II model of carbon flux in boreal tundra (Bunnell and Scoullar 1975, 1981) treated decomposition as the loss of carbon from litter, dead roots and rhizomes, and feces through respiration, leaching, and flux to soil organic matter, and the loss from soil organic matter through respiration, leaching, and flux to soil humus. Microbial dynamics were not modeled directly, but "respiratory" loss of CO_2 from the various dead organic matter compartments was dealt with

as microbial respiration. Microbial respiration, R(T, M), was modeled as a function of temperature and soil or litter moisture and described by the equation

$$R(T, M) = \frac{M}{a_1 + M} \times \frac{a_2}{a_2 + M} \times a_3 \times a_4^{(T-10)/10} \tag{60}$$

where R(T, M) is the respiration rate at temperature T and moisture level M, a_1 is the moisture content (%) at which the substrate is half-saturated with water, a_2 is the moisture content at which half the channels are saturated or blocked with water, a_3 is the respiration rate at 10°C when neither oxygen nor moisture is limiting, and a_4 is the Q_{10} coefficient. Leaching of organic carbon was generally assumed to be a linear function of moisture and temperature dependent upon various moisture and temperature thresholds. However, leaching from dead roots to soil was described by a maximum rate of flux which was modified by linear threshold functions of temperature and moisture.

Decomposition in the model ABISKO (Bunnell and Dowding 1974, Bunnell and Tait 1974), forerunner of ABISKO II, was conceptually treated in a manner very similar to that utilized in ABISKO II except that the respiratory function was of a different form. In ABISKO the respiration of green litter, RESP, for example, was described by

$$\text{RESP} = \begin{cases} 0 & \text{if WETL} \leq \text{RGM1} \\ \left[\dfrac{2e^{\alpha}}{1 + e^{\alpha}} - 1\right] \text{RMAX} & \text{if RGM1} < \text{WETL} < \text{RGM3} \\ \left[\dfrac{2e^{\alpha}}{1 + e^{\alpha}} - 1\right] \text{RMAX} - \left[\left[\dfrac{2e^{\beta}}{1 + e^{\beta}} - 1\right] \bullet (\text{RMAX} - \text{RESG1})\right] & \text{if RGM3} \leq \text{WETL} < \text{RGM4} \\ \text{RESG1} \times \text{RMAX} & \text{if WETL} \geq \text{RGM4} \end{cases} \tag{61}$$

where RMAX is the temperature-determined respiration rate; RGM1 is the lowest moisture level in the litter layer at which respiration is possible; RGM2 is the moisture level in the green litter layer at which optimal conditions for respiration are obtained; RGM3 is the moisture level in the green litter layer at which conditions begin to become anaerobic; RGM4 is the moisture level at which green litter becomes sufficiently anaerobic that respiration rates decline to RESG1 (RESG1 is the respiration rate of green litter as conditions approach an anaerobic state); WETL is the moisture level;

$$\alpha = 1.05 \left(\frac{WETL - RGM1}{RGM2 - RGM1}\right)^2 , \qquad (62a)$$

and

$$\beta = 1.05 \left(\frac{WETL - RGM3}{RGM4 - RGM3}\right)^2 . \qquad (62b)$$

3.3.7 Arid Lands

Parnas and Radford (1974; also see Goodall 1981) described a decomposition submodel developed as part of the arid lands general purpose modeling effort of the US/IBP Desert Biome program. Their model involved four substrates: carbon in carbon-nitrogen compounds, carbon in carbon-carbon compounds, organic nitrogen, and other elements. They modeled decomposition in several soil horizons, at the soil surface (litter and animal residue), and above the surface (standing dead). The rate of decomposition of a substrate was assumed to be proportional to the growth rate of its decomposers; hence, decomposer biomass was simulated directly. Decomposer growth rate, R, was described by the equation

$$R = (g \bullet C \bullet N)/(k_1 + C)(k_2 + N) \quad , \qquad (63)$$

where C is the total carbon in the material being decomposed, N is the total nitrogen available to the decomposers, k_1 and k_2 are Michaelis-Menten constants, and

$$g = G \bullet F_1(T) \bullet F_2(W) \bullet F_3(S) \bullet F_4(C\text{-}N) \quad , \qquad (64)$$

where G is the maximum growth rate under optimal conditions and $F_1(T)$, $F_2(W)$, $F_3(S)$, and $F_4(C\text{-}N)$ are trapezoidal functions of temperature, soil moisture, salinity, and the carbon-nitrogen ratio, respectively, describing the effect of those factors on decomposer growth.

Total carbon decomposition of material i, Z_{10i}, was described by

$$Z_{10i} = (R_{ki}/P_5 + P_6) \bullet Z_{12k} \quad , \tag{65}$$

where R_{ki} is the growth rate of decomposer k on substrate i [Eq. (63)], P_5 is the carbon assimilation efficiency of decomposer k, P_6 is the maintenance requirement for carbon for decomposer k, and Z_{12k} is the biomass of decomposer k. The respiration of carbon type f from material i, Z_{7if}j, was given by

$$Z_{7if} = (1 - P_5) \bullet Z_{1if} \quad \text{if } f \geq 3 \quad , \tag{66a}$$

or

$$Z_{7if} = 0 \quad \text{if } f < 3 \quad , \tag{66b}$$

where Z_{1if} is the decomposition of fraction f. Total CO_2 respiration was the sum of respiration of all carbon types from all materials.

This approach to modeling decomposition by considering decomposer dynamics explicitly is similar, at least conceptually, to the approaches of Hunt (1978) for temperate grasslands and Bosatta (1980) for northern coniferous forests. An alternative approach, which does not directly involve decomposer dynamics but considers the phenomenological loss of carbon from a substrate or litter horizon, has been taken by Sollins, Reichle, and Olson (1973) in deciduous forest and Furniss et al. (1982) in tropical savanna. Both approaches appear to do a reasonable job of simulating carbon dynamics in the decomposition process.

In the next section we present a brief survey of empirical data sources for seasonal decomposition in a variety of terrestrial systems. The purpose of this compilation and the structure of the synopses are similar to those for the seasonal production and litterfall data presented earlier.

3.4 EMPIRICAL DATA SOURCES FOR SEASONAL DECOMPOSITION

3.4.1 Tropical Forest

Authors:	Bernhard-Reversat, Huttel, and Lemee (1972)
Site:	Evergreen rain forest, Banco Natl. Park, Ivory Coast
Decomposition data:	Monthly litter decomposition rates
Other data:	Monthly rainfall, temperature, soil water content, and evapotranspiration

Author:	Edwards (1977)
Site:	Lower montane rain forest, New Guinea
Decomposition data:	Weight loss experiments on litter; linear rate of disappearance found; annual decay constants from 1.0 to 1.55
Other data:	Monthly rainfall and temperature

Authors:	Lambert, Arnason, and Gale (1980)
Site:	Belize
Decomposition data:	Annual total litter decomposition rates
Other data:	Monthly rainfall and temperature

Author:	Madge (1965)
Site:	Ibadan, Nigeria
Decomposition data:	Weight loss experiments
Other data:	Monthly rainfall and temperature

Authors:	Malaisse et al. (1972)
Site:	Miombo woodland, Zaire
Decomposition data:	Monthly estimates of several microbial parameters including algae, total microbial flora, aerobic digestion of cellulose, starch digestion, and ammonification
Other data:	Monthly rainfall, temperature, humidity, evapotranspiration, and total radiation

Authors:	Odum et al. (1970)
Site:	Rain forest, El Verde, Puerto Rico
Decomposition data:	Monthly soil respiration
Seasonal high:	August - 0.13 g C $m^{-2}h^{-1}$
Seasonal low:	February - 0.008 g C m^{-2} h^{-1}

Authors:	Rai and Srivastava (1982)
Site:	Varanasi Forest district, India
Decomposition data:	Weight loss experiments; monthly loss of litter, CO_2 evolution calculations
Seasonal high:	September - 110 mg $m^{-2}h^{-1}$
Seasonal low:	November-December - 10 mg $m^{-2}h^{-1}$
Other data:	Soil moisture and temperature by month

Authors:	Swift, Russel-Smith, and Perfect (1981)
Site:	Ibadan, Nigeria
Decomposition data:	Weight loss experiments, annual decomposition rates
Other data:	Monthly rainfall, monthly litter standing crop

Author:	Tanner (1980)
Site:	Montane forest, Jamaica
Decomposition data:	Weight loss experiments on litter; annual decomposition rates
Other data:	Monthly rainfall, standing crops of litter

Author:	Yoda (1978a)
Site:	Pasoh, Malaya
Decomposition data:	Monthly soil respiration rate; total soil and mineral soil
Seasonal high:	May - 600 mg CO_2 $m^{-2}h^{-1}$
Seasonal low:	December-January - 500 mg CO_2 $m^{-2}h^{-1}$

3.4.2 Tropical Savanna/Grassland

Authors:	Furniss et al. (1982)
Site:	South African savanna, Nylsvley
Decomposition data:	Model simulations of litter CO_2 evolution and data
Seasonal high:	October to November (because of high litter amounts), 12 g CO_2 $m^{-2}week^{-1}$
Seasonal low:	May to June

Authors:	Gupta and Singh (1981a,b)
Site:	Kurukohatra, India (3 stands)
Decomposition data:	Biweekly soil CO_2 evolution
Seasonal high:	July to October - 300 mg CO_2 $m^{-2}h^{-1}$
Seasonal low:	December to January - 50 mg CO_2 $m^{-2}h^{-1}$
Other data:	Daily soil water, air temperature, rainfall

Author:	Krishnamurthy (1978)
Site:	Semi-arid grassland, Khirasara, India
Decomposition data:	Litter and belowground biomass (root) decomposition by season
Seasonal high:	Root -- June to August - 0.65 g $m^{-2}d^{-1}$ Litter -- March to May - 0.01 g $m^{-2}d^{-1}$
Seasonal low:	Root -- September to November - 0 g $m^{-2}d^{-1}$ Litter -- June to August - 0 g $m^{-2}d^{-1}$
Other data:	Monsoon season is June to August; summer is March to May

Authors:	Morris, Bezuidenhout, and Furniss (1982)
Site:	Nylsvley savanna, South Africa
Decomposition data:	Monthly estimates of daily CO_2 flux from soil and litter, mass loss and CO_2 evolution of selected species, and soil CO_2 production

Seasonal high:	Soil CO_2 (under canopy) -- December-January - 3000 mg CO_2 $m^{-2}d^{-1}$
	(in open) -- December - 2100 mg CO_2 $m^{-2}d^{-1}$
	Litter CO_2 (under canopy) -- January - 2000 mg CO_2 $m^{-2}d^{-1}$
	(in open) -- November and March - 1800 mg CO_2 $m^{-2}d^{-1}$
Seasonal low:	Soil CO_2 (under canopy) -- August-early September - 100-200 mg CO_2 $m^{-2}d^{-1}$
	(in open) -- August-September - 100 mg CO_2 $m^{-2}d^{-1}$
	Litter CO_2 (under cover) -- September - 100 mg CO_2 $m^{-2}d^{-1}$
	(in open) -- July-August - 200 mg CO_2 $m^{-2}d^{-1}$
Other data:	Monthly soil moisture and temperature

Authors:	Naik and Mishra (1976)
Site:	Tropical grassland, Ambikapur, India
Decomposition data:	Monthly estimates of daily rate of litter disappearance
Seasonal high:	Site 1 (protected 2 years) -- June-July - 28.3 mg $g^{-1}d^{-1}$
	Site 2 (protected 10 years) -- August - 14.5 mg $g^{-1}d^{-1}$
Seasonal low:	Site 1 (protected 2 years) -- November - 1.8 mg $g^{-1}d^{-1}$
	Site 2 (protected 10 years) -- mid-March to mid-April - 1.4 mg $g^{-1}d^{-1}$
Other data:	Monthly rainfall, temperature, and relative humidity

Authors:	Ohiagu and Wood (1979)
Site:	Southern Guinea savana, Nigeria (grazed and ungrazed sites)
Decomposition data:	Bimonthly estimates of litter decomposition
Seasonal high:	Grazed -- April - 700 (kg ha^{-1})/2 months Ungrazed -- March - 800 (kg ha^{-1})/2 months
Seasonal low:	Grazed -- August - 80 (kg ha^{-1})/2 months Ungrazed -- August-September - 100 (kg ha^{-1})/2 months

Authors:	San Jose, Berrade, and Ramirez (1982)
Site:	*Trachypogon* grass savanna, Colombia
Decomposition data:	Monthly disappearance rates of belowground biomass
Seasonal high:	Rainy season, root dry weight lost at rate of 1% per day
Seasonal low:	End of dry season (May); loss rate less than half of peak
Other data:	Underground annual growth

Authors:	Upandhyaya and Singh (1981)
Site:	University campus of Ujjian, India
Decomposition data:	Monthly litter and root CO_2 evolution
Seasonal high:	August to September - 600 mg $m^{-2}h^{-1}$
Seasonal low:	April to May - 50 mg $m^{-2}h^{-1}$
Other data:	Root biomass, litter accumulation

3.4.3 Temperate Forest

Author:	Anderson (1973)
Site:	Blean Wood National Nature Reserve, Kent, England (*Castanea* and *Fagus*)
Decomposition data:	Biweekly CO_2 evolution from total floor
Seasonal high:	*Castanea* -- August 1 - 550 mg CO_2 $m^{-2}h^{-1}$ *Fagus* -- September 15 - 480 mg CO_2 $m^{-2}h^{-1}$

Seasonal low:	Castanea -- January to February - 100 mg CO_2 $m^{-2}h^{-1}$
	Fagus -- January to February - 100 mg CO_2 $m^{-2}h^{-1}$
Other data:	Biweekly precipitation and soil temperature

Author:	Bandola-Ciolczyk (1974)
Site:	Ispina forest district, Poland
Decomposition data:	Weight loss of litter, weekly to monthly

Authors:	Bartos and DeByle (1981)
Site:	Aspen stand, northern Utah
Decomposition data:	Weight-loss of leaf and twig litter over two-year period
Brief results:	42% of leaf litter weight lost during first winter, then stable for rest of two-year period; twig litter decayed at about half the rate

Author:	Edwards (1975)
Site:	Liriodendron stand, Oak Ridge, Teneessee
Decomposition data:	Biweekly CO_2 evolution from forest floor; soil and soil plus litter rates
Seasonal high:	September - 25.54 g CO_2 $m^{-2}d^{-1}$
Seasonal low:	February - 0.91 g CO_2 $m^{-2}d^{-1}$
Other data:	Dependence of rate on litter temperature

Authors:	Edwards and Sollins (1973)
Site:	Liriodendron forest, Oak Ridge, Tennessee
Decomposition data:	Biweekly/monthy CO_2 evolution from mineralized soil, O_1 litter layer, and O_2 litter layer (March-December)
Seasonal high:	O_1 layer -- June - 8.8 g CO_2 $m^{-2}d^{-1}$
	O_2 layer -- June - 5.0 g CO_2 $m^{-2}d^{-1}$
	Soil -- September - 23 g CO_2 $m^{-2}d^{-1}$
Seasonal low:	O_1 layer -- March - 0.13 g CO_2 $m^{-2}d^{-1}$
	O_2 layer -- April - 0.72 g CO_2 $m^{-2}d^{-1}$
	Soil -- March - 2.0 g CO_2 $m^{-2}d^{-1}$
Other data:	Seasonal soil temperature and moisture, litter temperature and moisture

Authors:	Edwards and Ross-Todd (1983)
Site:	Mixed deciduous forest, Oak Ridge, Tennessee
Decomposition data:	Monthly forest floor CO_2 efflux and mineral soil CO_2 efflux for one year pre- and post-clearcut (with control)
Seasonal high:	Forest floor (control) Pre-clearcut -- April-September - 4-5 g CO_2 $m^{-2}d^{-1}$ Post-clearcut -- August - 8 g CO_2 $m^{-2}d^{-1}$ Forest floor (clearcut) Pre-clearcut -- April-September - 4-5 g CO_2 $m^{-2}d^{-1}$ Post-clearcut (RL)* -- July - 7 g CO_2 $m^{-2}d^{-1}$ (RR)* -- September - 5 g CO_2 $m^{-2}d^{-1}$
Seasonal low:	Forest floor (control) Pre-clearcut -- October-February - <1 g CO_2 $m^{-2}d^{-1}$ Post-clearcut -- February - 3 g CO_2 $m^{-2}d^{-1}$ Forest floor (clearcut) Pre-clearcut -- October-February - <1 g CO_2 $m^{-2}d^{-1}$ Post-clearcut (RL) -- February-March - 3 g CO_2 $m^{-2}d^{-1}$ (RR) -- December-January - 4.5 g CO_2 $m^{-2}d^{-1}$
Other data:	Monthly soil temperature and soil moisture at 3 cm and 15 cm
Note:	*RL indicates residue left after clearcutting, RR indicates residue removed after clearcutting; when residue was removed seasonality was much reduced after clearcutting; when residue was left the seasonality resembled control

Author:	Froment (1972)
Site:	Virelles oak forest, Belgium
Decomposition data:	Biweekly CO_2 evolution
Seasonal high:	July to October - 3000 mg $m^{-2}d^{-1}$
Seasonal low:	January to February - 800 mg $m^{-2}d^{-1}$
Other data:	Biweekly temperature and precipitation

Authors:	Garrett and Cox (1973)
Site:	Oak hickory forest, Missouri
Decomposition data:	Seasonal CO_2 evolution (day and night)
Seasonal high:	Summer - 0.8 g $m^{-2}h^{-1}$
Seasonal low:	Winter - 0.15 g $m^{-2}h^{-1}$
Other data:	Seasonal temperature and precipitation

Authors:	Kowalenko, Ivarson, and Cameron (1978)
Site:	Ottawa, Canada
Decomposition data:	Cumulative evolution of CO_2 evolved from soil during year
Other data:	Model of CO_2 evolution in terms of temperature and water content

Author:	Lamb (1976)
Site:	*Pinus radiata* stand, southeastern Australia
Decomposition data:	Weight loss experiments; data for 20 and 40 days after start

Author:	Nakane (1980)
Site:	Evergreen oak, central Japan
Decomposition data:	CO_2 evolution as a function of temperature
Seasonal high:	August - 1000 mg CO_2 $m^{-2}h^{-1}$
Seasonal low:	January to March - 15 mg CO_2 $m^{-2}h^{-1}$

Author: Nakane (1980)
Site: Beech-fir forest, central Japan
Decomposition data: CO_2 evolution as a function of temperature
Seasonal high: August - 700 mg CO_2 $m^{-2}h^{-1}$
Seasonal low: January to March - 10 mg CO_2 $m^{-2}h^{-1}$

Authors: O'Connel and Menage (1982)
Site: Jarrah forest, western Australia
Decomposition data: Weight loss of litter by species, soil type, and burn history sampled at six-month intervals

Authors: Peterson and Rolfe (1982)
Site: Floodplain and upland forests, central Illinois
Decomposition data: Weight loss with time of litter
Brief results: Floodplain, k = 2.56
Upland, k = 0.65

Authors: Reichle et al. (1973a)
Site: Liriodendron forest, Oak Ridge, Tennessee
Decomposition data: Seasonal forest floor CO_2 evolution by horizon
Seasonal high: O_1 layer -- June - 2.0 g C $m^{-2}d^{-1}$
O_2 layer -- June - 1.2 g C $m^{-2}d^{-1}$
Soil -- September - 7 g C $m^{-2}d^{-1}$
Total -- September - 8.9 g C $m^{-2}d^{-1}$
Seasonal low: O_1 layer -- March - 0.1 g C $m^{-2}d^{-1}$
O_2 layer -- March - 0.1 g C $m^{-2}d^{-1}$
Soil -- February - 0.4 g C $m^{-2}d^{-1}$
Total -- March - 0.7 g C $m^{-2}d^{-1}$

Author: Reiners (1968)
Sites: Anoka County, Minnesota (oak forest, marginal fen, and cedar swamp)
Seasonal high: Oak -- July - 1 g CO_2 $m^{-2}h^{-1}$
Fen -- June - 0.7 g CO_2 $m^{-2}h^{-1}$
Swamp -- June - 1.0 g CO_2 $m^{-2}h^{-1}$
Other data: Weekly soil temperature and moisture

Author: Tewary, Pandey, and Singh (1982)
Site: Himalayan forest, mixed oak and conifers, India
Decomposition data: September only; evolution of CO_2 in soil, litter plus soil

Author: Thomas (1968)
Site: 19-year-old loblolly pine stand, Roane County, Tennessee
Decomposition data: Decomposition of pine needles from litterbags
Brief results: Nearly linear decomposition rate for one year

Authors: Virzo de Santo, Alfani, and Sapio (1976)
Site: Beech-fir stand, near Naples, Italy
Decomposition data: Monthly CO_2 evolution from soil and soil plus litter
Seasonal high: September - 250 mg CO_2 $m^{-2}h^{-1}$
Seasonal low: February - 40 mg CO_2 $m^{-2}h^{-1}$
Other data: Monthly soil water and air temperature

Author: Witkamp (1966a)
Site: Shortleaf pine, white oak, and red maple stands, Oak Ridge, Tennessee
Decomposition data: Biweekly forest floor CO_2 evolution averaged over the three stands
Seasonal high: June - 190 mL CO_2 $m^{-2}h^{-1}$
Seasonal low: late January - 35 mL CO_2 $m^{-2}h^{-1}$
Other data: Biweekly litter temperature

Author: Witkamp (1966b)
Sites: White oak, shortleaf pine, and red maple stands, Oak Ridge, Tennessee
Decomposition data: Biweekly CO_2 evolution from litterbags for four species

Seasonal high:	November - 12 μL CO_2 $g^{-1}h^{-1}$
Seasonal low:	February - 1 μL CO_2 $g^{-1}h^{-1}$
Other data:	Biweekly leaf moisture and litter-soil temperature; CO_2 production as a function of weight loss; biweekly estimates of bacteria, fungi, and mycelium growth; mean rates of CO_2 production per gram weight loss for four species

Authors:	Yoneda and Kirita (1978)
Site:	Warm temperate evergreen oak forest, Minamata, Japan
Decomposition data:	Bimonthly soil respiration rates in five plots
Seasonal high:	July-August - 800-1000 mg CO_2 $m^{-2}h^{-1}$
Seasonal low:	December-February - 100-250 mg CO_2 $m^{-2}h^{-1}$
Other data:	Seasonal soil surface temperature, soil respiration as a function of temperature, Q_{10}s for soil respiration (mean for five plots = 2.61, varying with altitude)

3.4.4 Temperate Grassland

Authors:	Clark and Coleman (1972)
Site:	Shortgrass prairie, Pawnee Grassland, Colorado
Decomposition data:	Monthly estimates of soil CO_2 evolution at three sites (two ungrazed) over growing season
Seasonal high:	Ungrazed 1 - September - 13.38 g CO_2 $m^{-2}d^{-1}$ Ungrazed 2 - July - 13.09 g CO_2 $m^{-2}d^{-1}$ (followed a 0.33-mm rain) Grazed - April - 3.47 g CO_2 $m^{-2}d^{-1}$
Seasonal low:	Ungrazed 1 -- August - 1.03 g CO_2 $m^{-2}d^{-1}$ Ungrazed 2 -- August - 1.36 g CO_2 $m^{-2}d^{-1}$ Grazed -- August - 1.31 g CO_2 $m^{-2}d^{-1}$
Other data:	Monthly soil temperature and soil water

Author:	Coleman (1973)
Site:	Grassland near Aiken, South Carolina
Decomposition data:	Monthly CO_2 evolution in litter-soil
Seasonal high:	August - 7.27 g CO_2 $m^{-2}d^{-1}$
Seasonal low:	November - 1.13 g CO_2 $m^{-2}d^{-1}$

Authors:	Dormaar, Johnston, and Smoliak (1984)
Sites:	Mixed prairie, Manyberries, Alberta, and fescue grassland, Stanley, Alberta (grazed and ungrazed plots)
Decomposition data:	Monthly total soil carbon in the A1 horizon, and water-soluble carbon in the A1 horizon for two years
Brief results:	Total carbon tended to be greatest in the winter in heavily grazed fescue grassland; water-soluble carbon varied a great deal month to month, and it was generally higher in the mixed prairie and ungrazed plots
Other data:	Monthly soil moisture, precipitation, and temperature; monthly dehydrogenase, phosphotase, and urease activity

Author:	Jakubczyk (1974)
Site:	Sheep pasture, Mate Pieniny Mts., Jaworski, Poland
Decomposition data:	Monthly estimates of a number of decomposition variables including cellulose decomposition rate, number of ammonifying bacteria, and dead plant material
Other data:	Monthly soil moisture

Authors:	de Jong and Schappert (1972)
Site:	Matador site, virgin prairie, Saskatchewan

Decomposition data: Weekly CO_2 evolution at surface during growing season
Seasonal high: June - 75 g CO_2 $cm^{-2}s^{-1}$ x 10^9
Seasonal low: September - 2 g CO_2 $cm^{-2}s^{-1}$ x 10^9

Author: Klein (1977)
Site: Shortgrass prairie, Pawnee Grasslands, Colorado
Decomposition data: Monthly estimates of CO_2 evolution from soil cores (0-6 cm); monthly soil respiratory quotients
Seasonal high: June - 5 g CO_2 $m^{-2}d^{-1}$
Seasonal low: March - 0 g CO_2 $m^{-2}d^{-1}$
Other data: Monthly soil moisture

Authors: Koelling and Kucera (1965)
Site: Bluestem stand, Prairie Research Station, east-central Missouri
Decomposition data: Weight loss experiments with foliage and flower stalk
Brief results: foliage decomposition half-life = 1.75 years, k = 0.40
Flower stalk half-life = 2.80 years, k = 0.24
Other data: Seasonal nutrient content of bluestem foliage

Authors: Kucera and Kirkham (1971)
Site: Mid-Missouri tallgrass prairie
Decomposition data: Weekly CO_2 evolution
Seasonal high: June to August - 700 mg CO_2 $m^{-2}h^{-1}$
Seasonal low: January to February - 100 mg CO_2 $m^{-2}h^{-1}$
Other data: Weekly soil temperatures

Author: Old (1969)
Site: Reclaimed tallgrass prairie, east-central Illinois
Decomposition data: Weight loss experiment with biweekly sampling intervals

Authors:	Sims and Singh (1978b,c)
Sites:	Western United States [Washington, Montana (2), North Dakota, South Dakota, Colorada, Kansas, New Mexico, Oklahoma, Texas]
Decomposition data:	Rates of accumulation and disappearance of aboveground and belowground organic matter
Brief results:	Rates of litter disappearance variable, depending on rainfall event

Author:	Uvarov (1982)
Site:	Arable soil, Moscow region, Russia
Decomposition data:	Loss of clover organic matter, monthly
Brief reults:	Over 50% lost in first three months (June to August); slow decay afterwards

Authors:	Vossbrinck, Coleman, and Woolley (1979)
Site:	Pawnee site, Colorado
Decomposition data:	Weight loss data
Brief results:	Blue grama litter down to 70% of original weight after nine months

Authors:	Warembourg and Paul (1977)
Site:	Southwestern Sasketchewan
Decomposition data:	Soil respiration during growing season
Seasonal high:	July - 10 g CO_2 $m^{-2}d^{-1}$
Seasonal low:	September - 1.5 g CO_2 $m^{-2}d^{-1}$
Other data:	Soil moisture through growing season

Authors:	Wildung, Garland, and Bushbom (1975)
Site:	Arid shrub-steppe, south-central Washington state
Decomposition data:	Biweekly or monthly soil respiration
Seasonal high:	June to September - 0.6 g C $m^{-2}d^{-1}$
Seasonal low:	December to February - 0.25 g C $m^{-2}d^{-1}$
Other data:	Monthly or biweekly soil water content and temperature

3.4.5 Boreal Forest

Authors: Hagvar and Kjondal (1981)
Site: North of Oslo, Norway
Decomposition data: Weight loss experiments on birch leaves
Other data: Monthly precipitation and temperature

Author: Moore (1984)
Site: Spruce-lichen woodland, northern Quebec, Canada
Decomposition data: Weight loss experiments over three years for several species/tissues on a mature site and on an 8-year-old burn site

Authors: Persson et al. (1980)
Site: 120-year-old Scots pine stand, Sweden
Decomposition data: Monthly respiratory metabolism for soil fauna, fungal hyphae length, bacteria and soil fauna abundance and biomass
Seasonal high: Soil fauna respiration -- August - 1800 mg C $m^{-2}month^{-1}$
Seasonal low: Soil fauna respiration -- March - 150 mg C $m^{-2}month^{-1}$
Other data: Monthly soil temperature, precipitation, and soil moisture in the humus layer

Authors: Piene and Van Cleve (1978)
Site: 70-year-old white spruce stand, Fairbanks, Alaska
Decomposition data: Weight loss experiments with litter bags in the litter, forest floor, and mineral soil layers

3.4.6 Boreal Tundra

Authors: Bunnell and Scoullar (1981)
Site: Point Barrow, Alaska

Decomposition data:	Seasonal soil respiration over growing season
Seasonal high:	late July - 6 g C m^{-2}
Seasonal low:	late June - 2 g C m^{-2}

Authors:	Heal et al. (1981)
Sites:	Point Barrow, Alaska, and Kevo, Finland
Decomposition data:	Seasonal total litter respiration
Seasonal high:	Point Barrow -- July - 90 µL CO_2 $g^{-1}h^{-1}$
	Kevo -- July - 160 µL CO_2 $g^{-1}h^{-1}$
Seasonal low:	Point Barrow -- October-May - 0 µL CO_2 $g^{-1}h^{-1}$
	Kevo -- November-March - 0 µL CO_2 $g^{-1}h^{-1}$

4. APPLICATION OF DATA TO SEASONAL MODELS

A goal of the compilation of literature data in this report is to develop a standard model to fit all of the seven ecosystem types, and perhaps even a finer division of ecosystem types at some later time. A basic problem is how to compartmentalize in such a way that the model remains fairly simple but does not ignore important details of any particular ecosystem type. One solution, which we leave open as a possibility, is to build some flexibility into the model, allowing more or fewer compartments depending on circumstances. Our basic, "simplest," model is depicted in Fig. 13. In Fig. 14 one possible expansion of this model to greater detail is illustrated.

The object of this chapter is to show the extent to which the compiled information can be used to specify the parameters of the seasonal model shown in Fig. 13. We do this for each ecosystem type separately. Because of the lack of data on litterfall and decomposition, arid lands are not considered. In the following pages a series of tables is presented that list all of the state variables, X_i, and fluxes, P_{ij}, of the model. For each flux or state variable literature references that contain measurements pertinent to it are listed. The actual data are not included, only the references where such data can be found. It is, of course, impossible to assign references to each flux or state variable in our model in an entirely clear-cut manner. Some literature measurements pertain to compartment categorizations somewhat different from those in Fig. 13. However, we are liberal in deciding when the values relevant to our model can at least be estimated from the particular reference cited, even though the precise data for our specific compartment or flux may not be explicitly given.

In Tables 1 to 12, the notation "D" indicates that the reference contains purely data, while an "M" indicates that the flux or state variable has been modeled, though the model is based on data. Parentheses are used to indicate that a group of state variables or fluxes have been measured jointly.

ORNL-DWG 84-15263

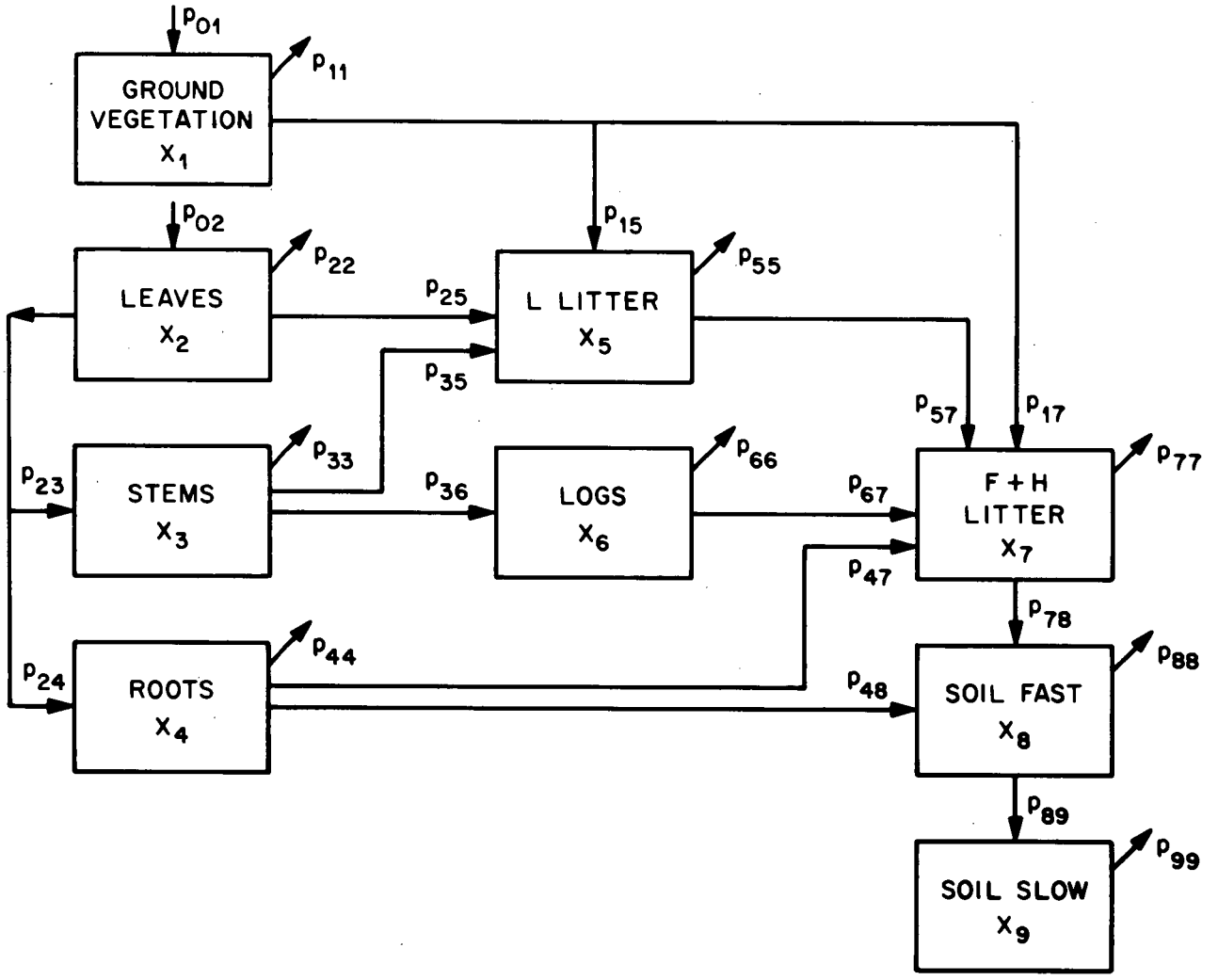

Fig. 13. Schematic diagram of the basic system to be used as a terrestrial seasonal model.

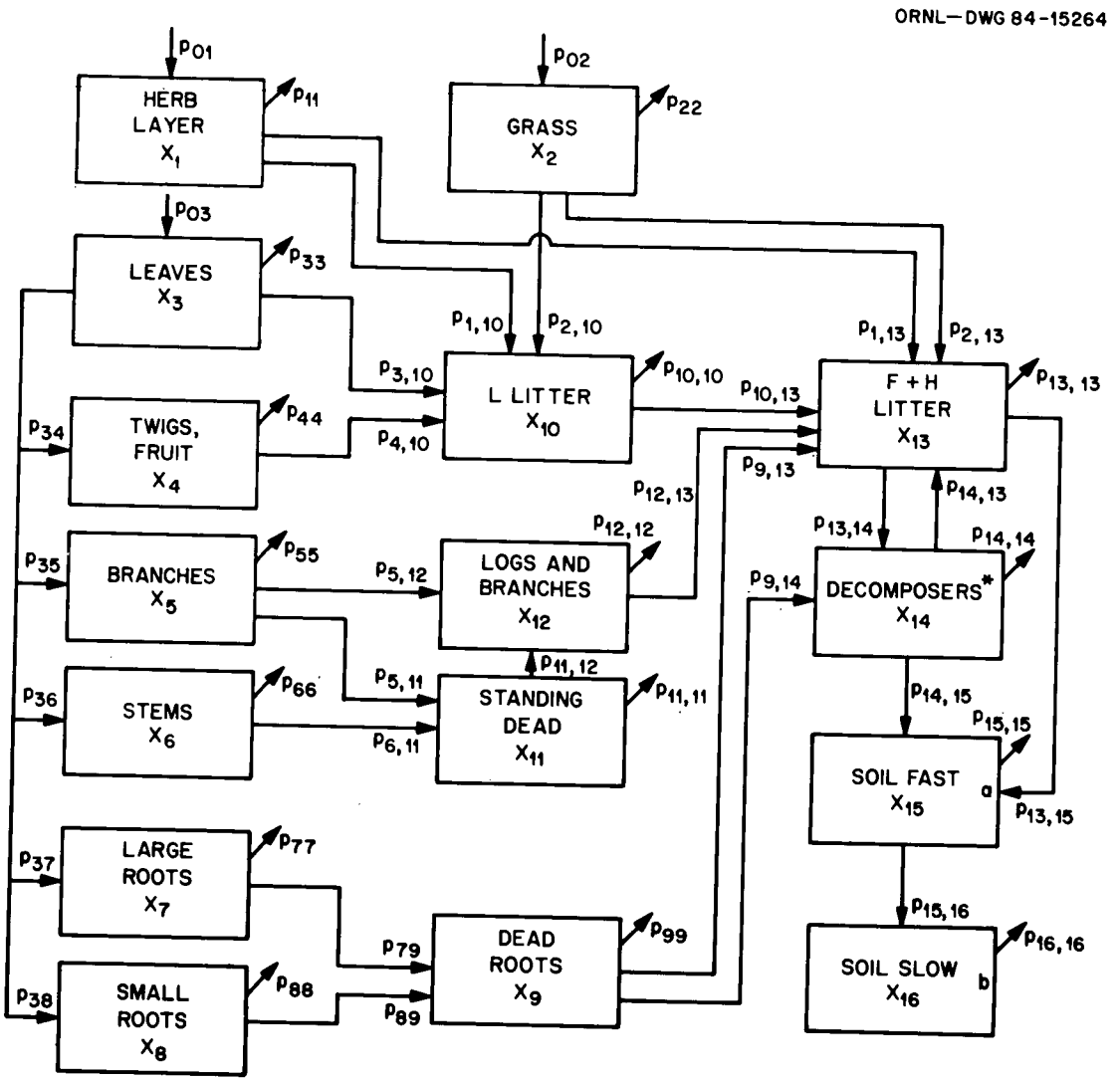

Fig. 14. Expanded version of the model shown in Fig. 13 to take advantage of additional compartmental information if available.

Table 1. State variables of the seasonal model (Fig. 13) applied to the tropical rain forest ecosystem type (D = pure data, M = model of data)

Reference	Primary producers				Litter			Soil	
	x_1	x_2	x_3	x_4	x_5	x_6	x_7	x_8	x_9
1	M	M	M	M	M	M	(M	M	M)
2		D							
3		D							
4					D				

References: 1. Bandhu et al. (1973) 2. Odum, Copeland, and Brown (1963) 3. Whitmore (1975) 4. Boojh and Ramakrishran (1982).

Table 2. Fluxes of the seasonal model (Fig. 13) applied to the tropical rain forest ecosystem type (D = pure data, M = model of data)

Reference	Primary producers		Respirations									Trans-locations		Live to dead						Litter/soil transfers	
	P_{01}	P_{02}	P_{11}	P_{22}	P_{33}	P_{44}	P_{55}	P_{66}	P_{77}	P_{88}	P_{99}	P_{23}	P_{24}	P_{15}	P_{25}	P_{57}	P_{67}	P_{36}	P_{47}	P_{78}	P_{89}
1	M	M	M	M	M	M	M	M	M	M	M	M	M	M	M	M	M	M	M	M	M
2	(D	D)	(D	D	D	D	D	D	D	D	D										
3															D			D			
4															D			D			
5							D								D			D			
6															(D			D)			
7							D	D							(D			D)			
8							D								D						
9							D								D			D			
10															D			D			
11															D						
12							D								D			D			
13							D														
14										(D	D)										
15															D			D			
16															D			D			
17															D			D			

References: 1. Bandhu et al. (1973) 2. Odum et al. (1970) 3. Kunkel-Westphal and Kunkel (1979) 4. Swift, Russel-Smith, and Perfect (1981) 5. Adis, Furch, and Irmler (1979) 6. Lambert, Arnason, and Gale (1980) 7. Madge (1965) 8. Edwards (1977) 9. Klinge and Rodrigues (1968) 10. Nye (1961) 11. Mitchell (see Bray and Gorham 1964) 12. Tanner (1980) 13. Rai and Srivastava (1982) 14. Yoda (1978a) 15. Bernhard-Reversat, Huttel, and Lemee (1972) 16. Boojh and Ramakrishran (1982) 17. Matsumoto and Abe (1979).

Table 3. State variables of the seasonal model (Fig. 13) applied to the tropical savanna ecosystem type (D = pure data, M = model of data)

Reference	Primary producers				Litter			Soil	
	x_1	x_2	x_3	x_4	x_5	x_6	x_7	x_8	x_9
1	D								
2	D								
3	D		D						
4	D								
5					D				
6				D					
7	D								
8	D								
9	D								
10	D								
11	D								
12	D								
13	M			M	M				
14					M		M	(M	M)

References: 1. Lamotte (1975) 2. San Jose and Medina (1975) 3. Shrimal and vYas (1975) 4. Singh (1968) 5. Krishnamurthy (1978) 6. San Jose, Berrade, and Ramirez (1982) 7. Afaloyan (1978) 8. Ambasht, Maurya, and Singh (1972) 9. Choudhary (1972) 10. Cresswell et al. (1982) 11. Egunjobi (1974) 12. Grunow, Groeneveld, and DuToit (1980) 13. Parton and Singh (1984) 14. Furniss et al. (1982).

Table 4. Fluxes of the seasonal model (Fig. 13) applied to the tropical savanna ecosystem type (D = pure data, M = model of data)

Reference	Primary producers		Respirations									Trans-locations		Live to dead						Litter/soil transfers	
	P_{01}	P_{02}	P_{11}	P_{22}	P_{33}	P_{44}	P_{55}	P_{66}	P_{77}	P_{88}	P_{99}	P_{23}	P_{23}	P_{15}	P_{25}	P_{57}	P_{67}	P_{36}	P_{47}	P_{78}	P_{89}
1														D							
2														D		D			D		
3																			D		
4								(M		M)						M	M				
5					(D	D			D	D	D)										
6					(D	D			D)												
7	D																				
8	M		M			M								M					M		
9							M		(M	M	M)			M		M				M	M

References: 1. Grunow, Groeneveld, and DuToit (1980) 2. Krishnamurthy (1978) 3. San Jose, Berrade, and Ramirez (1982) 4. Furniss et al. (1982) 5. Gupta and Singh (1981a,b) 6. Upandhyaya and Singh (1981) 7. Cresswell et al. (1982) 8. Parton and Singh (1984) 9. Furniss et al. (1982).

Table 5. State variables of the seasonal model (Fig. 13) applied to the temperate deciduous forest ecosystem type (D = pure data, M = model of data)

Reference	Primary producers				Litter			Soil	
	x_1	x_2	x_3	x_4	x_5	x_6	x_7	x_8	x_9
1	M	M	M	M	M	M	M	M	M
2	D								
3				D					
4	D								
5				D					
6	M	M	M	M	M	M	M	M	M
7		M	M	M	M		M		
8		D	D						
9				D					
10	D	(D	D)	D					
11	D								

References: 1. Andersson et al. (1973) 2. Satoo (1970) 3. Reichle et al. (1973a) 4. Dinger (1971) 5. Harris, Kinerson, and Edwards (1978) 6. Sollins, Reichle, and Olson (1973) 7. Shugart et al. (1974) 8. Day (1973) 9. Edwards and Harris (1977) 10. Olson (1971) 11. Struik (1965).

Table 6. Fluxes of the seasonal model (Fig. 13) applied to the temperate deciduous forest ecosystem type (D = pure data, M = model of data)

Reference	Primary producers		Respirations									Trans-locations		Live to dead						Litter/soil transfers	
	P_{01}	P_{02}	P_{11}	P_{22}	P_{33}	P_{44}	P_{55}	P_{66}	P_{77}	P_{88}	P_{99}	P_{23}	P_{24}	P_{25}	P_{35}	P_{57}	P_{67}	P_{36}	P_{47}	P_{78}	P_{89}
1	M	M	M	M	M	M	M	M	M	M	M	M	M	M	M	M	M	M	M	M	M
2			(M	M	M	M)	M		M	M	M			M	M						
3	D				D																
4	D		D																		
5	D																				
6														(D	D)						
7														(D	D)						
8														(D	D)						
9														D	D						
10														D	D						
11														D	D						
12						(D	D	D	D)	(D	D)										
13						(D	D	D	D)	(D	D)										
14						(D	D	D	D)	(D	D)										
15						(D	D	D	D)	(D	D)										
16						(D	D	D	D)	(D	D)										
17						(D	D	D	D)	(D	D)										
18						D								D	D						
19	D																				
20						(D	D	D	D)	(D	D)										

References: 1. Andersson et al. (1973) 2. Sollins, Reichle, and Olson (1973) 3. Woodwell and Botkin (1970) 4. Schulze and Koch (1971) 5. Edwards et al. (1981) 6. Witkamp and van der Drift (1961) 7. Kendrick (1959) 8. Danckelmann (1887) 9. Peterson and Rolfe (1982) 10. Gresham (1982) 11. Nakane (1980) 12. Edwards (1975) 13. Froment (1972) 14. Garrett and Cox (1973) 15. Reiners (1968) 16. Anderson (1973) 17. Edwards, Harris, and Shugart (1973) 18. Edwards and Harris (1977) 19. Lassoie et al. (1984) 20. Edwards and Ross-Todd (1983).

Table 7. State variables of the seasonal model (Fig. 13) applied to the temperate grassland ecosystem type (D = pure data, M = model of data)

Reference	Primary producers				Litter			Soil	
	x_1	x_2	x_3	x_4	x_5	x_6	x_7	x_8	x_9
1	D								
2	D								
3	D			D					
4	D			D					
5	D			D					
6				D	D				
7	D								
8	D								
9				D					
10	D								
11	D			D					
12	D								
13				D			(D	D	D)
14							(D	D	D)
15								(D	D)
16	M			M	M				
17	M			M	M		(M	M	M)

References: 1. French (1979b) 2. French, Steinhorst, and Swift (1979) 3. Sims and Singh (1971) 4. Lewis (1971) 5. Risser et al. (1981) 6. Sims and Singh (1978a) 7. Andrzejewska (1974) 8. Baier et al. (1972) 9. Dahlman and Kucera (1965) 10. Ode, Tieszen, and Lerman (1980) 11. Old (1969) 12. Pendleton et al. (1983) 13. Plewczynska - Kuras (1974) 14. Rice and Penfound (1954) 15. Dormaar, Johnston, and Smoliak (1984) 16. Sauer (1978) 17. Parton, Singh, and Coleman (1978).

Table 8. Fluxes of the seasonal model (Fig. 13) applied to the temperate grassland ecosystem type (D = pure data, M = model of data)

Reference	Primary producers		Respirations									Trans-locations		Live to dead						Litter/soil transfers	
	P_{01}	P_{02}	P_{11}	P_{22}	P_{33}	P_{44}	P_{55}	P_{66}	P_{77}	P_{88}	P_{99}	P_{23}	P_{24}	P_{15}	P_{25}	P_{57}	P_{67}	P_{36}	P_{47}	P_{78}	P_{89}
1	D																				
2														D					D		
3						(D			D	D	D)			D							
4						(D			D	D	D)										
5						(D			D	D	D)										
6						(D			D	D	D)										
7						(D	D		D	D	D)										
8	D		D			D															
9	D																				
10						(D			D	D	D)										
11							(D									D)					
12							(D									D)					
13	M		M			M								M							
14	M		M			M	M		M					M		M				(M	M)

References: 1. Fukai, Koh, and Kumura (1976) 2. Sauer (1978) 3. Warembourg and Paul (1977) 4. Kucera and Kirkham (1971) 5. Wildung, Garland, and Bushbom (1975) 6. de Jong and Schappert (1972) 7. Coleman (1973) 8. Brown and Trlica (1974) 9. Dye, Brown, and Trlica (1972) 10. Clark and Coleman (1972) 11. Koelling and Kucera (1965) 12. Old (1969) 13. Sauer (1978) 14. Parton, Singh, and Coleman (1978).

Table 9. State variables of the seasonal model (Fig. 13) applied to the boreal coniferous forest ecosystem type (D = pure data, M = model of data)

Reference	Primary producers				Litter			Soil	
	x_1	x_2	x_3	x_4	x_5	x_6	x_7	x_8	x_9
1	M	M	M	M	M	M	M	M	M
2		D							
3				D					
4		D		D					
5		D	D						
6	D								
7					(M		M	M	M)
8	M	M	M						

References: 1. Field et al. (1973) 2. Larsson and Tenow (1980) 3. Ericsson and Persson (1980) 4. Flower-Ellis and Persson (1980) 5. Satoo (1971) 6. Chapin (1983) 7. Bosatta (1980) 8. Kanninen, Hari, and Kellomaki (1982).

Table 10. Fluxes of the seasonal model (Fig. 13) applied to the boreal coniferous forest ecosystem type (D = pure data, M = model of data)

Reference	Primary producers		Respirations									Trans-locations		Live to dead						Litter/soil transfers	
	P_{01}	P_{02}	P_{11}	P_{22}	P_{33}	P_{44}	P_{55}	P_{66}	P_{77}	P_{88}	P_{99}	P_{23}	P_{24}	P_{15}	P_{25}	P_{57}	P_{67}	P_{36}	P_{47}	P_{78}	P_{89}
1	M	M	M	M	M	M	M	M	M	M	M	M	M	M	M	M	M	M	M	M	M
2		D																			
3		(D		D)	D																
4				D		D															
5		D		D																	
6		D		D																	
7															D						
8															D						
9							(D									D)					
10							(M		M	M	M)										

References: Field et al. (1973) 2. Agren et al. (1980) 3. Linder and Troeng (1980) 4. Chapin and Tryon (1983) 5. Helms (1965) 6. Teskey, Grier, and Hinckley (1984) 7. Larsson and Tenow (1980) 8. Satoo (1971) 9. Moore (1984) 10. Bosatta (1980).

Table 11. State variables of the seasonal model (Fig. 13) applied to the boreal tundra ecosystem type (D = pure data, M = model of data)

Reference	Primary producers				Litter			Soil	
	x_1	x_2	x_3	x_4	x_5	x_6	x_7	x_8	x_9
1	D			D					
2	D								
3	D								
4	D				D				
5	M			M	(M		M)	(M	M)

References: 1. Dennis, Tieszen, and Vetter (1978) 2. Rastorfer (1978) 3. Oechel and Sveinbjornsson (1978) 4. Bunnell and Scoullar (1981) 5. Bunnell and Scoullar (1975).

Table 12. Fluxes of the seasonal model (Fig. 13) applied to the boreal tundra ecosystem type (D = pure data, M = model of data)

Reference	Primary producers		Respirations									Trans locations		Live to dead						Litter/soil transfers	
	P_{01}	P_{02}	P_{11}	P_{22}	P_{33}	P_{44}	P_{55}	P_{66}	P_{77}	P_{88}	P_{99}	P_{23}	P_{24}	P_{15}	P_{25}	P_{57}	P_{67}	P_{36}	P_{47}	P_{78}	P_{89}
1	D		D																		
2	D																				
3	D		(D			D	D		D	D	D)										
4	D																				
5												(D	D)								
6	D																				
7	D																				
8							(D		D)												
9									(D	D	D)										
10			D				(D		D	D	D)										
11	D																				
12	M		M				(M		M)	(M	M)			M						M	

References: 1. Tieszen (1975, 1978b) 2. Oechel and Sveinbjornsson (1978) 3. Coyne and Kelley (1978) 4. Caldwell, Johnson, and Fareed (1978) 5. Allessio and Tieszen (1978) 6. Tieszen (1978c) 7. Kellomaki et al. (1977) 8. Heal et al. (1981) 9. Bunnell and Scoullar (1981) 10. Billings, Peterson, and Shaver (1978) 11. Johansson and Linder (1975).

5. CONCLUDING REMARKS

This report is part of an effort to improve our general understanding of the global carbon cycle. As far as the possible long-term effects of increasing CO_2 are concerned, the seasonal aspects of the carbon cycle may be of minor importance. However, information on this seasonality may throw light on the important terrestrial-atmospheric carbon fluxes in general. A modeling effort directed at describing the seasonality may improve our general understanding of the global carbon cycle in the following ways.

(1) It may help determine if the seasonality of atmospheric CO_2 concentrations is sensitive to effects that could be of long-term importance, such as CO_2-stimulated high rates of terrestrial photosynthesis.

(2) It may contribute to our knowledge of whether various terrestrial ecosystems are acting as sources or sinks and whether climatic changes could alter the present situation.

(3) The seasonal cycle may act as a monitor of biotic metabolism and provide insight into the health and productivity of the biosphere; consequently, an improved understanding of this seasonal metabolism takes on added importance.

Mathematical modeling efforts directed at describing the seasonality of the global carbon cycle may approach the problem from different directions. (1) Empirical relationships can be derived between the seasonal photosynthetic and respiratory fluxes and climatic variables. (2) Standardized compartment models can be applied to each biome, life-zone type, or latitudinal zone. (3) Models already developed for specific sites may be borrowed and various modifications made in them so they apply to wider areas than the particular sites for which they were originally designed.

The data and models presented in this report can be utilized in each of these approaches. The compiled literature data provide reference to sources of information on both biotic and climatic variables needed in the derivation of empirical relationships between

these variables (approach 1). In Sect. 4 of this report we demonstrate the application of the compiled data and models to seasonal models of carbon flux in several principal terrestrial biome types (approach 2). We are currently pursuing the application of the data and models to the elaboration of site-specific models (approach 3). We are using information gleaned during the compilation to identify appropriate site-specific models; the empirical data sets are being used as reference points in the extrapolation of these models from site to region and biome. Although we have elected for various reasons to pursue this third approach intensively, each of the others has the potential to greatly improve our understanding of the seasonality in the global carbon cycle. We believe researchers following the other approaches will also find this compilation useful.

A cursory glance at the tables in Sect. 4 suggests that there are gaps in our knowledge of carbon reservoirs and fluxes across ecosystem types, even in those described by the relatively simple model depicted in Fig. 13. These absences limit to some degree any attempt to understand the seasonal carbon cycle. Some of these gaps could be filled with further literature review. However, our review is fairly extensive, and we believe that certain absences would persist, particularly in some ecosystem types. Obviously, some reservoirs and fluxes are better represented in some biomes than in others, and although world coverage is reasonably extensive, there are regions (e.g., tropical rain forest in Africa, temperate forest in China) that are underrepresented. These gross, global-scale gaps in information are understandable given the historical and practical limitations on ecological research. However, there are finer-scale, local absences in carbon flux data that can be attributed in part to the fact that (with the laudable exceptions of such efforts as the International Biological Programme and the Brookhaven Forest studies) there have been relatively few efforts to integrate the individual ecosystem process studies of a locale or ecosystem-type into a cohesive whole. Piecemeal investigations are apt to leave gaps in the overall picture.

Ecologists may be limited in their ability to fill large gaps in the global coverage of carbon dynamics, but some progress could be made on a more local scale. We do not suggest anything so extensive or formal as the IBP, but rather an informal collaboration (even ad hoc) of researchers of various expertise working in the same ecosystem type. The gaps in our tables may serve as a stimulus to move in this direction.

There are limitations imposed by the existing data sets that are more a function of the type of data collected than the absence of particular data. Many of the estimates of both ecosystem reservoirs and fluxes are derived from autecological studies. Ostensibly, the needs of a synthesis of ecosystem biome carbon dynamics such as ours would be better served by a different approach. Data on the dynamics of carbon in a square meter or kilometer of the landscape would in many ways be more useful for purposes here than comparable data on Herba exemplum or a collection of such plants from that same plot. The latter introduces to the already considerable difficulties in extrapolation from plot to biome the additional complication of extrapolation from species to plot. The species paradigm is pervasive in ecology and has proven useful; however, certain applications may be better served by considering an alternative paradigm.

A somewhat similar problem arises in considering the time scale at which data are collected. State variables may be measured every day or once a month. Researchers may measure carbon flux (e.g., respiration) every hour for one 24-hour period during each month and report an average hourly rate representative of the month. Others may measure flux every ten days and report a mean daily rate. It is not clear what the appropriate time scale for carbon flux measurement is, relative to understanding seasonal carbon dynamics, nor is it clear what effect converting fluxes to common scales (e.g., multiplying by 24 to convert hourly rates to daily rates) will have on error propagation. These and other problems of scale and hierarchical organization are important in any attempt to extend our knowledge of carbon dynamics at the whole plant level to the biome and global level. We are not currently in a

position to recommend the scale or level of organization most appropriate for understanding regional carbon dynamics. Hopefully, with an awareness of these problems, the process of modeling seasonal carbon fluxes in terrestrial biomes will highlight where these problems are most critical and bring us closer to making such recommendations.

This report does not include data on at least three components of seasonal carbon flux in terrestrial biomes. These omissions do not represent judgments on the importance of these elements as much as considerations of space, time, and effort. The first of these components is seasonal carbon dynamics in agroecosystems. Agricultural systems such as croplands dominate relatively large portions of the landscape in many regions (e.g., the midwestern United States, western Europe, and northern India) and their carbon dynamics are probably sufficiently different from those of more natural ecosystems to warrant special consideration. These dynamics will be treated in an introductory manner in a forthcoming report. The second omitted component is seasonality in secondary production and the effect of consumers on seasonal carbon dynamics. Presumably, these effects are small and the relative amounts of carbon involved are negligible; they are not usually considered in models of carbon dynamics. These presumptions may prove to be true, but appeal to dogma and general practice is never fully satisfying. The role of consumers in seasonal carbon dynamics should receive further attention. The last of the omitted components concerns the role of freshwater and estuary carbon storage and flux in regional carbon dynamics. Arguments similar to those for secondary production about relative influence and carbon content can be made for these aquatic systems; however, they too deserve further attention. Over certain scales and in certain regions, seasonal downstream flux of organic carbon may be particularly important. No single research project can hope to deal with all of these components in a satisfactory manner; researchers must rely on widespread interest by others to accommodate these other factors, or leave them for future consideration.

The inherent seasonality of the global carbon cycle has been recognized for some time, and seasonal variations in plant-level and stand-level carbon fluxes have been noted even longer. Only recently, however, has there been concentrated effort directed towards understanding the seasonality of global carbon dynamics. It is no accident that this interest has paralleled intensified investigation of the role of the biosphere in the global carbon cycle; the two are inseparably related. There are several approaches to understanding seasonal biospheric carbon dynamics (we have mentioned three), and it is by no means clear which of these will prove to be the most fruitful. Certainly, investigators should pursue as many lines of research as possible. Each will provide its own rewards, and comparisons of their respective results will provide further insight.

REFERENCES

Adis, J., K. Furch, and U. Irmler. 1979. Litter production of a central-Amazonian black water inundation forest. Trop. Ecol. 20:236-245.

Afolayan, T. A. 1978. Grass biomass production in a northern Guinea savanna ecosystem. Oecol. Plant. 13:375-386.

Agren, G. I., and B. Axelsson. 1980. PT - A tree growth model. pp. 525-536. IN T. Persson (ed.), Structure and function of northern coniferous forests -- An ecosystem study. Ecol. Bull. 32. Swedish Natural Science Research Council, Stockholm.

Agren, G. I., B. Axellson, J. G. K. Flower-Ellis, S. Linder, H. Persson, H. Stoat, and E. Troeng. 1980. Annual carbon budget for a young Scots pine. pp. 307-327. IN T. Persson (ed.), Structure and function of northern coniferous forests -- An ecosystem study. Ecol. Bull. 32. Swedish Natural Science Research Council, Stockholm.

Allen, L. H., Jr., D. W. Stewart, and E. R. Lemon. 1974. Photosynthesis in plant canopies: Effect of light response curves and radiation source geometry. Photosynthetica 8:184-207.

Allen, L. H., Jr., and E. R. Lemon. 1974. Carbon dioxide exchange and turbulence in a Costa Rican tropical rain forest. pp. 265-308. IN J. L. Monteith (ed.), Vegetation and the atmosphere. Academic Press, New York.

Allen, L. H., Jr., E. R. Lemon, and L. Muller. 1972. Environment of a Costa Rican forest. Ecology 53:102-111.

Allen, L. H., Jr., S. E. Jensen, and E. R. Lemon. 1971. Plant response to carbon dioxide enrichment under field conditions: A simulation. Science 173:256-258.

Allessio, M. L., and L. L. Tieszen. 1978. Translocation and allocation of ^{14}C-photoassimilate by Dupontia fisheri. pp. 394-413. IN L. L. Tieszen (ed.), Vegetation and production ecology of an Alaskan arctic tundra. Springer-Verlag, New York.

Ambasht, R. S., A. N. Maurya, and V. N. Singh. 1972. Primary production and turnover in certain protected grasslands of Varanasi, India. pp. 43-50. IN P. M. Golley and F. B. Golley (eds.), Papers from a symposium on tropical ecology with an emphasis on organic productivity. University of Georgia, Institute of Ecology, Athens.

Anderson, J. M. 1973. Carbon dioxide evolution from two temperate deciduous woodland soils. J. Appl. Ecol. 10:361-378.

Andersson, F., S. Denaeyer, P. Duvigneaud, N. T. Edwards, J. E. Satchell, P. Solins, N. Tarsia, H. M. Thandrup, W. Van Winkle, J. B. Waide, and J. R. Webster. 1973. Seasonal model of a temperate deciduous forest. pp. 296-305. IN L. Kern (ed.), Modeling forest ecosystems. EDFB-IBP-73-7. Oak Ridge National Laboratory, Oak Ridge, TN.

Andrzejewska, L. 1974. Analysis of a sheep pasture ecosystem in the Pieniny Mountains (The Carpathians). V. Herbivores and their effect on plant production. Ekol. Pol. 22:527-534.

Angus, J. F., and J. H. Wilson. 1976. Photosynthesis of barley and wheat leaves in relation to canopy models. Photosynthetica 10:367-377.

Anway, J. C., E. G. Britain, H. W. Hunt, G. S. Innis, W. J. Parton, C. F. Rodell, and R. H. Sauer. 1972. ELM: Version 1.0. US/IBP Grassland Biome Tech. Rep. No. 156. Colorado State University, Fort Collins.

Ares, J., and J. S. Singh. 1974. A model of root biomass dynamics of a shortgrass prairie dominated by blue grama (Bouteloua gracilis). J. Appl. Ecol. 11:727-744.

Ayyad, M. A. 1981. Soil-vegetation-atmosphere interactions. pp. 9-31. IN D. W. Goodall, R. A. Perry, and K. M. W. Howes (eds.), Arid-land ecosystems: structure, functioning, and management. Vol. 2. Cambridge University Press, Cambridge, England.

Bacastow, R., and C. D. Keeling. 1973. Atmospheric carbon dioxide and radiocarbon in the natural carbon cycle. II. Changes from A.D. 1700-2070 as deduced from a geochemical model. pp. 86-135. IN G. M. Woodwell and E. V. Pecan (eds.), Carbon and the biosphere. CONF-720510. Technical Information Center, Oak Ridge, TN.

Baier, J. D., F. A. Bazzaz, L. C. Bliss, and W. R. Boggess. 1972. Primary production and soil relations in an Illinois sand prairie. Am. Midl. Nat. 88:200-208.

Bamberg, S. A., A. T. Vollmer, G. E. Kleinkopf, and T. L. Ackerman. 1976. A comparison of seasonal primary production of Mojave desert shrubs during wet and dry years. Am. Midl. Nat. 95:398-405.

Bamberg, S. A., G. E. Kleinkopf, A. Wallace, and A. Vollmer. 1975. Comparative photosynthetic production of Mojave desert shrubs. Ecology 56:732-736.

Bandhu, D., J. Bullock, C. S. Gist, F. Maliasse, H. Ogawa, B. Rust, and M. A. Strand. 1973. Seasonal model of the tropical forests. pp. 285-295. IN L. Kern (ed.), Modeling forest ecosystems. EDFB-IBP-73-7. Oak Ridge National Laboratory, Oak Ridge, TN.

Bandola-Ciolzyk, E. 1974. Production of tree leaves and energy flow through the litter in Tilio-Carpinetum association (International Biological Programme area). Stud. Naturae - Seria A 9:29-91.

Barnes, R. L. 1972. Some physiological considerations in the conversion of photosynthate to biomass in loblolly pine. pp. 155-165. IN C. E. Murphy, J. D. Hesketh, and B. R. Strain (eds.), Modeling the growth of trees. EDFB-IBP-72-11. Oak Ridge National Laboratory, Oak Ridge, TN.

Bartos, D. L., and N. V. DeByle. 1981. Quantity, decomposition, and nutrient dynamics of aspen litterfall in Utah. For. Sci. 27:381-390

Bell, C. J. 1982. A model of stomatal control. Photosynthetica 16:486-495.

Benedict, H. M., and G. M. Brown. 1944. The growth and carbohydrate responses of Agropyron smithi and Bouteloua gracilis to changes in nitrogen supply. Plant Physiol. 19:481-494.

Berg, B., and E. Bosatta. 1976. A carbon-nitrogen model of a pine forest soil ecosystem -- Development paper. Swedish Coniferous Forest Project Int. Rep. 42.

Bernhard-Reversat, F., C. Huttel, and G. Lemee. 1972. Some aspects of the seasonal ecological periodicity and plant activity in an evergreen rain forest of the Ivory Coast. pp. 217-234. IN P. M. Golley and F. B. Golley (eds.), Papers from a Symposium on Tropical Ecology With an Emphasis on Organic Productivity. University of Georgia, Institute of Ecology, Athens.

Billings, W. D., K. M. Peterson, and G. R. Shaver. 1978. Growth, turnover, and respiration rates of roots and tillers in tundra graminoids. pp. 415-435. IN L. L. Tieszen (ed.), Vegetation and Production Ecology of an Alaskan Arctic Tundra. Springer-Verlag, New York.

Black, C. A. 1968. Soil Plant Relationships. John Wiley and Sons, Inc., New York.

Bledsoe, L. J., and J. S. Olson. 1970. COMSYSI: A stepwise compartmental simulation program. ORNL/TM-2413. Oak Ridge National Laboratory, Oak Ridge, TN.

Bledsoe, L. J., R. C. Francis, G. L. Swartzman, and J. D. Gustafson. 1971. PWNEE: A grassland ecosystem model. US/IBP Grassland Biome Tech. Rep. No. 64. Colorado State University, Fort Collins.

Bliss, L. C., (ed.). 1977. Truelove Lowland, Devon Island, Canada: A High Arctic Ecosystem. University of Alberta Press, Edmonton.

Bliss, L. C., O. W. Heal, and J. J. Moore, (eds.). 1981. Tundra Ecosystems: A Comparative Analysis. Cambridge University Press, Cambridge, England.

Bolin, B. 1970. The carbon cycle. Sci. Am. 223:310-320.

Bolin, B., A. Bjorkstrom, C. D. Keeling, R. Bacastow, and U. Siegenthaler. 1981. Carbon cycle modelling. pp. 1-28. IN B. Bolin (ed.), Carbon Cycle Modelling. J. Wiley and Sons, Chichester.

Bolin, B., and E. Eriksson. 1959. Changes in carbon content of the atmosphere and sea due to fossil fuel combustion. pp. 130-143. IN B. Bolin (ed.), The Atmosphere and the Sea in Motion. Rossly Memorial Volume. Rockefeller Institute Press, New York.

Boojh, R., and P. S. Ramakrishran. 1982. Litterfall pattern in a subtropical evergreen montane forest in north-east India. Geol. kcol. Trop. 6:33-44.

Bosatta, E. 1980. Modelling of soil processes - An introduction. pp. 553-564. IN T. Persson (ed.), Structure and Function of Northern Coniferous Forests -- An Ecosystem Study. Ecol. Bull. 32. Swedish Natural Science Research Council, Stockholm.

Boyer, J. S. 1970. Leaf enlargement and metabolic rates in corn, soybean, and sunflower at various leaf water potentials. Plant Physiol. 46:233-235.

Bray, J. R. 1963. Root production and the estimation of net productivity. Can. J. Bot. 41:65-72.

Bray, J. R., and E. Gorham. 1964. Litter production in forests of the world. Adv. Ecol. Res. 2:101-157.

Breymeyer, A. I., and G. M. Van Dyne. 1980. Grassland, systems analysis, and man. Cambridge University Press, Cambridge, England.

Brockington, N. R., and G. J. A. Ryle. 1972. A model of carbon assimilation and growth in a grass plant. pp. 107-114. IN C. E. Murphy, J. D. Hesketh, and B. R. Strain (eds.), Modeling the Growth of Trees. EDFB-IBP-72-11. Oak Ridge National Laboratory, Oak Ridge, TN.

Brown, J., P. C. Miller, L. L. Tieszen, and F. L. Bunnell, (eds.). 1980. An Arctic Ecosystem: The Coastal Tundra at Barrow, Alaska. Dowden, Hutchinson, and Ross, Stroudsburg, Pa.

Brown, K. W. 1969. A model of the photosynthesizing leaf. Physiol. Plant. 22:620-637.

Brown, L. F., and M. J. Trlica. 1974. Photosynthesis of two important grasses of the shortgrass prairie as affected by several ecological variables. US/IBP Grassland Biome Tech. Rep. No. 244. Colorado State University, Fort Collins.

Brown, S., and A. E. Lugo. 1982. The storage and production of organic matter in tropical forests and their role in the global carbon cycle. Biotropica 14:161-187.

Bunnell, F. L., and D. E. Tait. 1974. Mathematical simulation models of decomposition processes. pp. 207-225. IN A. J. Holding, O. W. Heal, S. F. McLean, Jr., and P. W. Flanagan (eds.), Soil Organisms and Decomposition in Tundra. Tundra Biome Steering Committee, Stockholm.

Bunnell, F. L., D. E. Tait, P. W. Flanagan, and K. Van Cleve. 1977. Microbial respiration and substrate weight loss. I. A general model of the influences of abiotic variables. Soil Biol. Biochem. 9:33-40.

Bunnell, F. L., and K. A. Scoullar. 1975. ABISKO II. A computer simulation model of carbon flux in tundra ecosystems. pp. 425-448. IN T. Rosswall and O. W. Heal (eds.), Structure and Function of Tundra Ecosystems. Ecol. Bull. 20. Swedish Natural Science Research Council, Stockholm.

Bunnell, F. L., and K. A. Scoullar. 1981. Between site comparisons of carbon flux in tundra using simulation models. pp. 685-715. IN L. C. Bliss, O. W. Heal, and J. J. Moore (eds.), Tundra Ecosystems: A Comparative Analysis. Cambridge University Press, Cambridge, England.

Bunnell, F. L., and P. Dowding. 1974. ABISKO - A generalized model for comparisons between tundra sites. pp. 227-247. IN A. J. Holding, O. W. Heal, S. F. MacLean, Jr., and P. W. Flanagan (eds.), Soil Organisms and Decomposition in Tundra. Tundra Biome Steering Committee, Stockholm.

Caldwell, M. M., D. A. Johnson, and M. Fareed. 1978. Constraints on tundra productivity: Photosynthetic capacity in relation to solar radiation utilization and water stress in arctic and alpine tundras. pp. 323-342. IN L. L. Tieszen (ed.), Vegetation and Production Ecology of an Alaskan Arctic Tundra. Springer-Verlag, New York.

Cale, W. G., Jr. 1979. Modeling grassland primary productivity using piecewise stationary, piecewise linear mathematics. Ecol. Model. 77:107-123.

Cale, W. G., Jr., and J. B. Waide. 1980. A simulation model of decomposition in a shortgrass prairie. Ecol. Model. 8:1-14.

Cannell, M. G. R. 1982. World Forest Biomass and Primary Production Data. Academic Press, London.

Chapin, F. S., III. 1983. Nitrogen and phosphorus nutrition and nutrient cycling by evergreen and deciduous understory shrubs in an Alaskan black spruce forest. Can. J. For. Res. 13:773-781.

Chapin, F. S., III, and P. R. Tryon. 1983. Habitat and leaf habit as determinants of growth, nutrient absorption, and nutrient use by Alaskan taiga forest species. Can. J. For. Res. 13:818-826.

Chartier, P. 1970. A model of CO_2 assimilation in the leaf. pp. 307-316. IN I. Setlik (ed.), Prediction and Measurement of Photosynthetic Productivity. Proc. IBP/PP Tech. Meeting, Trebon, Pudoe, Wageningen.

Chartier, P., and J. L. Prioul. 1976. The effects of irradiance, carbon dioxide, and oxygen on the net photosynthetic rate of the leaf: A mechanistic model. Photosynthetica 10:20-24.

Choudhary, V. B. 1972. Seasonal variation in standing crop and net aboveground production in Dicanthium annulatum grassland at Varanasi. pp. 51-58. IN P. M. Golley and F. B. Golley (eds.), Papers From a Symposium on Tropical Ecology With an Emphasis on Organic Productivity. University of Georgia, Institute of Ecology, Athens.

Christie, E. K. 1981. Biomass and nutrient dynamics in a C_4 semi-arid Australian grassland community. J. Appl. Ecol. 18:907-918.

Chung, H. -H., and R. L. Barnes. 1980. Photosynthate allocation in Pinus tadea. III. Photosynthate economy, its production, consumption, and balance in shoots during the growing season. Can. J. For. Res. 10:348-356.

Clark, F. E., and D. C. Coleman. 1972. Secondary Productivity Belowground In Pawnee Grassland, 1971. US/IBP Grassland Biome Tech. Rep. No. 169.

Cole, D. W., S. P. Gessell, and S. F. Dice. 1967. Distribution and cycling of nitrogen, phosphorus, potassium, and calcium in a second-growth Douglas fir ecosystem. pp. 197-232. IN H. E. Young (ed.), Symposium on Primary Productivity and Mineral Cycling in Natural Ecosystems. Am. Assoc. Adv. Sci. 13th Annual Meeting, New York, Dec. 1967. University of Maine Press, Orono.

Coleman, D. C. 1973. Soil carbon balance in a successional grassland. Oikos 24:195-199.

Collins, N. M. 1977. Vegetation and litter production in southern Guinea savanna, Nigeria. Oecologia (Berlin) 28:163-175.

Coniferous Forest Biome Modeling Group. 1977. CONIFER: A Model of Carbon and Water Flow Through a Coniferous Forest. Documentation. Coniferous Forest Biome Bull. 8. University of Washington, Seattle.

Connor, D. J. 1970. Community structure and photosynthesis. A computer model. Tech. Pap. Univ. Queensl. Pap. Dep. Bot.

Connor, D. J. 1973. GROMAX: A Potential Productivity Routine for a Total Grassland Ecosystem Model. US/IBP Grassland Biome Tech. Rep. No. 208. Colorado State Univ. Ft. Collins.

Connor, D. J., B. R. Tunstall, and R. van den Driesche. 1971. An analysis of photosynthetic response in a brigalow forest. Photosynthetica 5:218-225.

Connor, D. J., L. F. Brown, and M. J. Trlica. 1974. Plant cover, light interception, and photosynthesis of a shortgrass prairie. A functional model. Photosynthetica 8:18-27.

Connor, D. J., and O. Cartledge. 1970. Observed and calculated photosynthetic rates of Chloris gayana communities. J. Appl. Ecol. 7:353-362.

Connor, D. J., and O. Cartledge. 1971. Structure and photosynthesis of wheat communities. J. Appl. Ecol. 8:467.

Cornet, A. F. 1981. Measurement of the aerial production of three grassland communities in the Sahelian zone of Senegal. Trop. Ecol. 22:256-262.

Coughenour, M. B., S. J. McNaughton, and L. L. Wallace. 1984. Modeling primary production of perennial graminoids - Uniting physiological processes and morphometric traits. Ecol. Model. 23:101-134.

Coutinho, L. M. 1982. Ecological effects of fire in Brazilian cerrado. pp. 273-291. IN B. J. Huntley and B. H. Walker (eds.), Ecology of Tropical Savannas. Springer-Verlag, Berlin.

Coyne, P. I., and J. J. Kelley. 1978. Meteorological assessment of CO_2 exchange over an Alaskan arctic tundra. pp. 299-321. IN L. L. Tieszen (ed.), Vegetation and Production Ecology of an Alaskan Arctic Tundra. Springer-Verlag, New York.

Craig, H. 1957. The natural distribution of radiocarbon and the exchange time of carbon dioxide between atmosphere and sea. Tellus 9:1-17.

Cramer, R. N., D. Tompkins, N. J. Barr, E. R. Williams, and H. L. Stewart. 1984. Litterfall in a Pinus radiata forest: The effect of irrigation and fertilizer treatments. J. Appl. Ecol. 21:313-326.

Cresswell, C. F., P. Ferrar, J. O. Grunow, D. Grossman, M. C. Rutherford, and J. J. P. Van Wyk. 1982. Phytomass, seasonal phenology, and photosynthetic studies. pp. 476-498. IN B. J. Huntley and B. H. Walker (eds.), Ecology of Tropical Savannas. Springer-Verlag, Berlin.

Cromack, K. 1973. Litter production and decomposition in a mixed hardwood watershed at Coweeta Hydrological Station, North Carolina. Ph.D. Thesis, University of Georgia, Athens.

Cunningham, G. L., F. R. Balding, and J. P. Syvertsen. 1974. A net CO_2 exchange model for C_4 grasses. Photosynthetica 8:28-33.

Cunningham, G. L., J. P. Syvertsen, J. F. Reynolds, and J. M. Willson. 1979. Some effects of soil mositure availability on aboveground production and reproductive allocation in Larrea tridentata (DC) Cov. Oecologia 40:113-123.

Curry, R. B. 1971. Dynamic simulation of plant growth. Part I. Development of a model. Trans. ASAE 14:946-949.

Curry, R. B. 1972. Dynamic simulation of plant growth: An example using corn. pp. 119-121. IN C. E. Murphy, J. D. Hesketh, and B. R. Strain (eds.), Modeling the Growth of Trees. EDFB-IBP-72-11. Oak Ridge National Laboratory, Oak Ridge, TN.

Curry, R. B., and L. H. Chen. 1971. Dynamic simulation of plant growth. Part II. Incorporation of actual daily weather and partitioning of net photosynthate. Trans. ASAE 14:1170-1174.

Dahlman, R. C., and C. L. Kucera. 1965. Root productivity and turnover in native prairie. Ecology 46:84-89.

Danckelmann, B. 1887. Steuertragstafel für Kiefern Bestande. Z. Forst.- Jagdwes. 19:457-466

Davidson, R. L. 1969. Effects of soil nutrients and moisture on root/shoot ratios in Lolium perenne L. and Trifolium repens L. Ann. Bot. (London). 33:571-577.

Day, F. P., Jr. 1973. Primary production and nutrient pools in the vegetation on a southern Appalachian watershed. EDFB Memo Report 73-88. Oak Ridge National Laboratory, Oak Ridge, TN.

DeAngelis, D. L., R. H. Gardner, and H. H. Shugart. 1981. Productivity of forest ecosystems studied during the IBP: The woodlands data set. pp. 567-572. IN D. E. Reichle (ed.), Dynamic Properties of Forest Ecosystems. Cambridge University Press, Cambridge, England.

DeMichele, D. W., and P. Sharpe. 1972. A morphological and physiological model of the stomata. pp. 69-86. IN C. E. Murphy, J. D. Hesketh, and B. R. Strain (eds.), Modeling the Growth of Trees. EDFB-IBP-72-11. Oak Ridge National Laboratory, Oak Ridge, TN.

de Wit, C. T. 1965. Photosynthesis of leaf canopies. Agric. Res. Rep. Centre Agric. Publ. Docum., Wageningen 663:1-57.

de Wit, C. T., et al. 1978. Simulation of assimilation, respiration, and transpiration of crops. Simulation Monographs, Pudoc, Wageningen.

Dennis, J. G., L. L. Tieszen, and M. A. Vetter. 1978. Seasonal dynamics of above- and belowground production of vascular plants at Barrow, Alaska. pp. 113-140. IN L. L. Tieszen (ed.), Vegetation and Production Ecology of an Alaskan Arctic Tundra. Springer-Verlag, New York.

Detling, J. K. 1979. Processes controlling blue grama production on the shortgrass prairie. pp. 25-42. IN N. R. French (ed.), Perspectives in Grassland Ecology. Springer-Verlag, New York.

Detling, J. K., W. J. Parton, and H. W. Hunt. 1978. An empirical model for estimating CO_2 exchange of Bouteloua gracilis (H. B. K.) Lag. in the shortgrass prairie. Oecologia 33:137-147.

Detling, J. K., W. J. Parton, and H. W. Hunt. 1979. A simulation model of Bouteloua gracilis biomass dynamics on the North American shortgrass prairie. Oecologia 38:167-191.

Dinger, B. 1971. Seasonal dynamics of canopy development in a yellow poplar forest. EDFB-IBP Memo Report 71-76. Oak Ridge National Laboratory, Oak Ridge, TN.

Dormaar, J. F., A. Johnston, and S. Smoliak. 1984. Seasonal changes in carbon content, and dehydrogenase, phosphatase, and urease activities in mixed prairie and fescue grassland Ah horizons. J. Range Manage. 37:31-35.

Duncan, W. G., and B. J. Barfield. 1970. Predicting effects of CO_2 enrichment with simulation models and a digital computer. Trans. ASAE 13:246-248.

Duncan, W. G., R. S. Loomis, W. A. Williams, and R. Hanau. 1967. A model for simulating photosynthesis in plant communities. Hilgardia 38:181-205.

Dye, A. J., L. F. Brown, and M. J. Trlica. 1972. Carbon dioxide exchange of blue grama as influenced by several ecological parameters, 1971. US/IBP Grassland Biome Tech. Rep. No. 181. Colorado State University, Fort Collins.

Edwards, N. T. 1975. Effects of temperature and moisture on carbon dioxide evolution in a mixed deciduous forest. Soil Sci. Soc. Am. Proc. 39:361-365.

Edwards, N. T., and B. M. Ross-Todd. 1983. Soil carbon dynamics in a mixed deciduous forest following clearcutting with and without residue removal. Soil Sci. Soc. Am. J. 47:1014-1021.

Edwards, N. T., H. H. Shugart, Jr., S. B. McLaughlin, W. F. Harris, and D. E. Reichle. 1981. Carbon metabolism in terrestrial ecosystems. pp. 499-536. IN D. E. Reichle (ed.), Dynamic Properties of Forest Ecosystems. Cambridge University Press, Cambridge, England.

Edwards, N. T., and P. Sollins. 1973. Continuous measurement of carbon dioxide evolution from partitioned forest floor compartments. Ecology 54:406-412.

Edwards, N. T., and W. F. Harris. 1977. Carbon cycling in a mixed deciduous forest floor. Ecology 58:431-437.

Edwards, N. T., W. F. Harris, and H. H. Shugart, Jr. 1973. Carbon cycling in deciduous forest. EDFB-IBP-73-80. Oak Ridge National Laboratory, Oak Ridge, TN.

Edwards, P. J. 1977. Studies of mineral cycling in a montane rain forest in New Guinea. J. Ecol. 65:971-992.

Egunjobi, J. K. 1974. Dry matter, nitrogen, and mineral element distribution in an unburnt savanna during the year. Oecol. Plant. 9:1-10.

Emanuel, W. R., G. G. Killough, and J. S. Olson. 1981. Modeling the circulation of carbon in the world's terrestrial ecosystems. pp. 335-353. IN B. Bolin (ed.), Carbon Cycle Modelling. J. Wiley and Sons, Chichester.

Emanuel, W. R., G. G. Killough, W. M. Post, and H. H. Shugart, Jr. 1984. Modeling terrestrial ecosystems in the global carbon cycle with shifts in carbon storage capacity by land-use change. Ecology 65:970-983.

Enoch, H. Z., and J. M. Sacks. 1978. An empirical model of CO_2 exchange of a C_3 plant in relation to light, CO_2 concentration and temperature. Photosynthetica 12:150-157.

Ericsson, A., and H. Persson. 1980. Seasonal changes in starch reserves and growth of fine roots of 20-year-old Scots pine. pp. 239-250. IN T. Persson (ed.), Structure and Function of Northern Coniferous Forests -- An Ecosystem Study. Ecol. Bull. 32. Swedish Natural Science Research Council, Stockholm.

Eriksson, E., and P. Welander. 1956. Mathematical modeling of the carbon cycle in nature. Tellus 8:155-174.

Field, D., A. G. Gordon, C. C. Grier, P. Havas, Y. Kitazawa, C. E. Murphy, K. L. Ree, T. Schutt, and C. O. Tamm. 1973. Seasonal model of the coniferous ecosystem. pp. 306-312. IN L. Kern (ed.), Modeling Forest Ecosystems. EDFB-IBP-73-7. Oak Ridge National Laboratory, Oak Ridge, TN.

Flower-Ellis, J. G. K. 1975. Growth in populations of Andromeda polifolia on a subarctic mire. pp. 129-134. IN F. E. Wielgolaski (ed.), Fennoscandian Tundra Ecosystems. Part 1. Plants and Microorganisms. Springer-Verlag, Berlin.

Flower-Ellis, J. G. K., and H. Persson. 1980. Investigations of structural properties and dynamics of Scots pine stands. pp. 125-138. IN T. Persson (ed.), Structure and Function of Northern Coniferous Forests -- An Ecosystem Study. Ecol. Bull. 32. Swedish Natural Science Research Council, Stockholm.

French, N. R. (ed.). 1979a. Perspectives in Grassland Ecology. Springer-Verlag, New York.

French, N. R. 1979b. Principal subsystem interactions in grasslands. pp. 137-190. IN N. R. French (ed.), Perspectives in Grassland Ecology. Springer-Verlag, New York.

French, N. R., R. K. Steinhorst, and D. M. Swift. 1979. Grassland biomass trophic pyramids. pp. 59-87. IN N. R. French (ed.), Perspectives in Grassland Ecology. Springer-Verlag, New York.

Froment, A. 1972. Soil respiration in a mixed oak forest. Oikos 23:273-297.

Fukai, S., S. Koh, and A. Kumura. 1976. Dry matter production and photosynthesis of Hordeum vulgare L. in the field. J. Appl. Ecol. 13:877-887.

Furniss, P. R., P. Ferrar, J. W. Morris, and J. J. Bezuidenhout. 1982. A model of savanna litter decomposition. Ecol. Model. 17:33-51.

Gardner, R. H., and J. B. Mankin. 1981. Analysis of biomass allocation in forest ecosystems of the IBP. pp. 451-497. IN D. E. Reichle (ed.), Dynamic Properties of Forest Ecosystems. Cambridge University Press, Cambridge, England.

Garrett, H. E., and G. S. Cox. 1973. Carbon dioxide evolution from the floor of an oak-hickory forest. Soil Sci. Soc. Am. Proc. 37:641-644.

Gerasimenko, T. V. and O. V. Zalenskiy. 1974. Diurnal and seasonal dynamics of photosynthesis in plants of Wrangel Island. International Tundra Biome Translation 11 (from Botanicheskiy Zhurnal, USSR Academy of Sciences 58:1655-1666 [1973]).

Gilmanov, T. G. 1977. Plant submodel in the holistic model of a grassland ecosystem (with special attention to the belowground part). Ecol. Model. 3:149-163.

Goldstein, R. A., J. B. Mankin, and R. J. Luxmoore. 1974. Documentation of PROSPER: A Model of Atmosphere-Soil-Plant Waterflow. EDFB-IBP-73-9. Oak Ridge National Laboratory, Oak Ridge, TN.

Goodall, D. W. 1965. Computer methods in range management. Paper presented at Australian Arid Zone Research Conference, Alice Springs, September 1965.

Goodall, D. W. 1967. Computer simulation of changes in vegetation subject to grazing. J. Indian Bot. Soc. 46:356-362.

Goodall, D. W. 1969. Simulating the grazing situation. pp. 211-236. IN F. Heinmets (ed.), Concepts and Models of Biomathematics: Simulation Techniques and Methods. Marcel Dekker, New York.

Goodall, D. W. 1970. Use of computer in the grazing management of semi-arid lands. pp. 917-922. IN Proc. 11th Int. Grassland Congr., University of Queensland Press, St. Lucia.

Goodall, D. W. 1973a. Ecosystem simulation in the US/IBP Desert Biome. pp. 777-780. IN 1973 Summer Computer Simulation Conf.

Goodall, D. W. 1973b. Terrestrial Models -- Introduction. US/IBP Desert Biome Research Memorandum RM 73-53. Utah State University, Logan.

Goodall, D. W. 1975. Ecosystem modelling in the desert biome. pp. 73-94. IN B. C. Patten (ed.), Systems Analysis and Simulation in Ecology. Vol. 3. Academic Press, New York.

Goodall, D. W. 1981. The modelling of arid ecosystem dynamics. pp. 385-410. IN D. W. Goodall, R. A. Perry, and K. M. W. Howes (eds.), Arid-land Ecosystems: Structure, Functioning, and Management. Vol. 2. Cambridge University Press, Cambridge, England.

Goodall, D. W., and C. Gist. 1973. Terrestrial Models: Introduction and MAIN Programs. US/IBP Desert Biome Research Memorandum RM 73-53. Utah State University, Logan.

Goodall, D. W., R. A. Perry, and K. M. W. Howes (eds.). 1981. Arid-land Ecosystems: Structure, Functioning, and Management. Vol. 2. Cambridge University Press, Cambridge, England.

Gowdy, C. M., R. J. Mulholland, and W. R. Emanuel. 1975. Modeling the global carbon cycle. Int. J. Syst. Sci. 6:965-976.

Gresham, C. A. 1982. Litterfall pattern in mature loblolly and longleaf pine stands in coastal South Carolina. For. Sci. 28:223-231.

Grier, C. C., and R. S. Logan. 1977. Organic matter distribution and net production in plant communities of a 450-year-old Douglas fir ecosystem. Ecol. Monogr. 47:373-400.

Grunow, J. O., H. T. Groeneveld, and S. H. C. DuToit. 1980. Aboveground dry matter dynamics of the grass layer of a South African tree savanna. J. Ecol. 68:887-889.

Gupta, R. K., S. K. Saxena, and S. K. Sharm. 1972. Aboveground productivity of grasslands at Jodhpur, India. pp. 75-93. IN P. M. Golley and F. B. Golley (eds.), Papers From a Symposium on Tropical Ecology with an Emphasis on Organic Productivity. University of Georgia, Institute of Ecology, Athens.

Gupta, S. R., and J. S. Singh.. 1981a. Soil respiration in a tropical grassland. Soil Biol. Biochem. 13:261-268.

Gupta, S. R., and J. S. Singh. 1981b. The effect of plant species, weather variables and chemical composition of plant material on decomposition in a tropical grassland. Plant Soil 59:99-117.

Hadley, E. B. 1970. Net productivity and burning responses of native eastern North Dakota prairie communities. Am. Midl. Nat. 84:121-135.

Hadley, E. B., and B. J. Kieckhefer. 1963. Productivity of two prairie grasses in relation to fire frequency. Ecology 44:389-395.

Hagvar, S., and B. R. Kjondal. 1981. Decomposition of birch leaves: dry weight loss, chemical changes and effects of artificial acid rain. Pedobiologia 22:232-245.

Haines, B., and R. B. Foster. 1977. Energy flow through litter in a Panamanian forest. J. Ecol. 65:147-155.

Hall, A. E. 1971. A model of leaf photosynthesis and respiration. Carnegie Inst. Washington, Yearb. 70:530-540.

Haldin, S., H. Grip, P. -E. Jansson, and A. Lindgren. 1980. Micrometeorology and hydrology of pine forest ecosystems. II. Theory and models. pp. 463-503. IN T. Persson (ed.), Structure and Function of Northern Coniferous Forests -- An Ecosystem Study. Ecol. Bull. 32. Swedish Natural Science Research Council, Stockholm.

Hari, P., S. Kellomaki, and R. Vuokko. 1977. A dynamic approach to the analysis of daily height growth in plants. Oikos 28:234-241.

Harris, W. F., R. S. Kinerson, and N. T. Edwards. 1978. Comparisons of belowground biomass of natural deciduous forest and loblolly pine plantations. Pedobiologia 17:369-381.

Heal, O. W., and D. F. Perkins (eds.). 1978. Production Ecology of British Moors and Montane Grasslands. Springer-Verlag, Berlin.

Heal, O. W., P. W. Flanagan, D. D. French, and S. F. MacLean, Jr. 1981. Decomposition and accumulation of organic matter. pp. 587-633. IN L. C. Bliss, O. W. Heal, and J. J. Moore (eds.), Tundra Ecosystems: A Comparative Analysis. Cambridge University Press, Cambridge, England.

Heasley, J. E., W. K. Lauenroth, and J. L. Dodd. 1981. Systems analysis of potential air pollution impacts on grassland ecosystems. pp. 347-359. IN W. J. Mitsch, R. W. Bosserman, and J. M. Kopatck (eds.), Energy and Ecological Modeling. Elsevier, Amsterdam.

Heasley, J. E., W. K. Lauenroth, and T. P. Yorks. 1984. Simulation of SO_2 impacts. pp. 161-184. IN W. K. Lauenroth and E. M. Preston (eds.), The Effects of SO_2 on a Grassland. Springer-Verlag, New York.

Helms, J. 1965. Diurnal and seasonal patterns of net assimilation in Douglas fir, Pseudotsuga menziesii (Mirb.), as influenced by environment. Ecology 46:698-708.

Hodanova, D. 1979. Sugar beet canopy photosynthesis as limited by leaf age and irradiance: Estimation by models. Photosynthetica 13:376-385.

Holding, A. J., O. W. Heal, S. F. McLean, Jr., and P. W. Flanagan. 1974. Soil Organisms and Decomposition in Tundra. Tundra Biome Steering Committee, Stockholm.

Hopkins, B. 1968. Vegetation of the Olokemeji Forest Reserve, Nigeria. V. The vegetation of the savanna site with special reference to its seasonal changes. J. Ecol. 56:97-115.

Hozumi, K., H. Kirita, and M. Nishioka. 1972. Estimation of canopy photosynthesis and its seasonal change in a warm-temperate evergreen oak forest at Minamata (Japan). Photosynthetica 6:158-168

Hozumi, K., K. Yoda, S. Kokawa, and T. Kira. 1969. Production ecology of tropical rain forests in southwestern Cambodia. I. Plant biomass. Nat. Life in Southeastern Asia 6:1-56.

Hozumi, K., K. Yoda, and T. Kira. 1969. Production ecology of tropical rain forests in southwestern Cambodia. II. Photosynthetic production in an evergreen seasonal forest. Nat. Life in Southeastern Asia 6:57-81.

Hunt, H. W. 1978. A simulation model for decomposition in grasslands. pp. 155-183. IN G. S. Innis (ed.), Grassland Simulation Model. Springer-Verlag, New York.

Hunt, R. 1975. Further observations on root/shoot equilibrium in perennial grasses (Lolium perenne L.). Ann. Bot. 39:745-755.

Hylton, L. O., A. Ulrich, and D. R. Cornelius. 1965. Comparisons of nitrogen constituents as indicators of the nitrogen status of Italian ryegrass, and the relation of top to root growth. Crop Sci. 5:21-22.

Innis, G. S. 1975. Role of total systems models in the Grassland Biome Study. pp. 13-47. IN B. C. Patten (ed.), Systems Analysis and Simulation in Ecology. Vol 3. Academic Press, New York.

Innis, G. S. (ed.). 1978. Grassland Simulation Model. Springer-Verlag, New York.

Innis, G. S., and G. M. Van Dyne. 1973. Modeling in the US/IBP Grassland Biome Study. Ann. Univ. Abidjan series (Ecologie, Tome IV, Fuse. 23:305-311).

Jacquez, J. A. 1972. Compartmental Analysis in Biology and Medicine. Elsevier, New York.

Jakubczyk, H. 1974. Analysis of a sheep pasture ecosystem in the Pieniny Mountains (The Carpathians). IX. Decomposition processes and development of microflora in the soil. Ekol. Pol. 22:569-588.

Jenny, H., S. P. Gessel, and F. T. Bingham. 1949. Comparative studies of decomposition rates of organic material in temperate and tropical regions. Soil Sci. 68:419-442.

Johansson, L. -G., and S. Linder. 1975. The seasonal pattern of photosynthesis of some vascular plants on a subarctic mire. pp. 194-200. IN F. E. Wielgolaski (ed.), Fennoscandian Tundra Ecosystems. Part 1. Plants and Microorganisms. Springer-Verlag, Berlin.

John, D. M. 1973. Accumulation and decay of litter and net production of forests in tropical West Africa. Oikos 24:430-435.

Jones, H. E., and A. J. P. Gore. 1972. Descriptive models in comparative ecosystem studies. pp. 35-47. IN F. E. Wielgolaski and T. Rosswall (eds.), Proceedings of the IVth International Meeting on Biological Productivity of Tundra. Tundra Biome Steering Committee, Stockholm.

Jones, H. E., and A. J. P. Gore. 1978. A simulation of production and decay in blanket bog. pp. 160-186. IN O. W. Heal and D. F. Perkins (eds.), Production Ecology of British Moors and Montane Grasslands. Springer-Verlag, Berlin.

Jones, H. E., and A. J. P. Gore. 1981. A simulation approach to primary production. pp. 239-256. IN L. C. Bliss, O. W. Heal, and J. J. Moore (eds.), Tundra Ecosystems: A Comparative Analysis. Cambridge University Press, Cambridge, England.

de Jong, E., and H. J. V. Schappert. 1972. Calculation of soil respiration and activity from CO_2 profiles in the soil. Soil Sci. 113:328-333.

Kanninen, M., P. Hari, and S. Kellomaki. 1982. A dynamic model for aboveground growth and dry matter production in a forest community. J. Appl. Ecol. 19:465-476.

Karenlampi, L., J. Tammisola, and H. Hurme. 1975. Weight increase of some lichens as related to carbon dioxide exchange and thallus moisture. pp. 135-137. IN F. E. Wielgolaski (ed.), Fennoscandian Tundra Ecosystems. Part 1. Plants and Microorganisms. Springer-Verlag, Berlin.

Keeling, C. D. 1973. The carbon dioxide cycle: Reservoir models to depict the exchange of atmospheric carbon dioxide with the oceans and land plants. pp. 251-329. In S. E. Rasool (ed.), Chemistry of the Lower Atmosphere. Plenum, New York.

Keller, T. 1971. Allg. Forst. Jagdztg 142(4). [reported in W. Larcher. 1975. Physiological Plant Ecology. Springer-Verlag, New York.]

Kelley, J. M., P. A. Opstrup, J. S. Olson, S. I. Auerbach, and G. M. Van Dyne. 1969. Models of seasonal primary productivity in eastern Tennessee, Festuca and Andropogon systems. ORNL-4310. Oak Ridge National Laboratory, Oak Ridge, TN.

Kellomaki, S., P. Hari, R. Vuokko, E. Vaisanen, and M. Kanninen. 1977. Aboveground growth rate of a dwarf shrub community. Oikos 29:143-149.

Kelly, R. D., and B. H. Walker. 1976. The effects of different forms of land use on the ecology of a semi-arid region in southeastern Rhodesia. J. Ecol. 64:553-576.

Kelting, R. W. 1954. Effects of moderate grazing on the composition and plant production of a native tallgrass prairie in central Oklahoma. Ecology 35:200-207.

Kendrick, W. B. 1959. The time factor in decomposition of coniferous leaf litter. Can. J. Bot. 37:907-912.

Kinerson, R. S. 1975. Relationships between plant surface area and respiration in loblolly pine. J. Appl. Ecol. 12:965-971.

King, K. L., and K. J. Hutchinson. 1983. The effects of sheep grazing on invertebrate numbers and biomass in unfertilized natural pastures of the New England tablelands (NSW). Australian J. Ecol. 8:245-255.

Kira, T., H. Ogawa, K. Yoda, and K. Ogino. 1964. Primary production by a tropical rain forest in southern Thailand. Bot. Mag. 77:428-429.

Kira, T., H. Ogawa, K. Yoda, and K. Ogino. 1967. Comparative ecological studies on three main types of vegetation in Thailand. IV. Dry matter production with special reference to the Khao Chong rain forest. Nat. Life in Southeastern Asia 5:149-174.

Kira, T., and H. Shidei. 1967. Primary production and turnover of organic matter in different forest ecosystems of the western Pacific. Japan J. Ecol. 17:70-80.

Kira, T., K. Shinozaki, and K. Hozumi. 1969. Structure of forest canopies as related to their primary productivity. Plant Cell Physiol. 10:129-142.

Klein, D. A. 1977. Seasonal carbon flow and decomposer parameter relationships in a semi-arid grassland soil. Ecology 58:184-190.

Klinge, H., and W. A. Rodrigues. 1968. Litter production in an area of Amazonian terra firma forest. Part I. Litterfall, organic carbon and total nitrogen contents of litter. Amazoniana 1:287-302.

Koelling, M. R., and C. L. Kucera. 1965. Dry matter losses and mineral leaching in bluestem standing crop and litter. Ecology 46:529-532.

Kowalenko, C. G., K. C. Ivarson, and D. R. Cameron. 1978. Effects of moisture content, temperature, and nutrient fertilization on carbon dioxide evolution from field soils. Soil Biol. Biochem. 10:417-423.

Krishnamurthy, L. 1978. Herbage dynamics of some semi-arid Indian grazing lands. Ecol. Model. 5:77-81.

Kucera, C. L., and D. R. Kirkham. 1971. Soil respiration studies in tallgrass prairie in Missouri. Ecology 52:912-915.

Kunkel-Westphal, I., and P. Kunkel. 1979. Litterfall in a Guatemalan primary forest; with details of leaf-shedding by some common tree species. J. Ecol. 67:665-686.

Laisk, A. 1970. A model of leaf photosynthesis and respiration. pp. 295-306. In I. Setlik (ed.), Prediction and Measurement of Photosynthetic Productivity. Proc. IBP/PP Tech. Meeting, Trebon, Pudoc, Wageningen.

Lamb, D. 1976. Decomposition of organic matter on the forest floor of Pinus radiata plantations. J. Soil Sci. 27:206-217.

Lambert, J. D. H., J. T. Arnason, and J. L. Gale. 1980. Leaf-litter and changing nutrient levels in a seasonally dry tropical hardwood forest, Belize, C. A. Plant Soil 55:429-443.

Lamotte, N. 1975. The structure and function of a tropical savanna ecosystem. pp. 179-222. IN F. B. Golley and E. Medina (eds.), Tropical Ecological Systems: Trends in Terrestrial and Aquatic Research. Springer-Verlag, Berlin.

Larcher, W. 1969. The effect of environmental and physiological variables on the carbon dioxide gas exchange of trees. Photosynthetica 3:167-198.

Larcher, W. 1975. Physiological Plant Ecology. Springer-Verlag, Berlin.

Larsen, J. A. 1980. The Boreal Ecosystem. Academic Press, New York.

Larsson, S., and O. Tenow. 1980. Needle-eating insects and grazing dynamics in a mature Scots pine forest in central Sweden. pp. 269-306. IN T. Persson (ed.), Structure and Function of Northern Coniferous Forests -- An Ecosystem Study. Ecol. Bull. 32. Swedish Natural Science Research Council, Stockholm.

Lassoie, J. P., P. M. Dougherty, P. B. Reich, T. M. Hinckley, C. M. Metcalf, and S. J. Dina. 1984. Ecophysiological investigations of understory eastern red cedar in central Missouri. Ecology 64:1355-1366.

Lawrence, B. A., M. C. Lewis, and P. C. Miller. 1978. A simulation model of population processes of arctic tundra graminoids. pp. 599-619. IN L. L. Tieszen (ed.), Vegetation and Production Ecology of an Alaskan Arctic Tundra. Springer-Verlag, New York.

Lemon, E., D. W. Stewart, and R. W. Shawcroft. 1971. The sun's work in a cornfield. Science 174:371-378.

Lemon, E., L. H. Allen, Jr., and L. Muller. 1970. Carbon dioxide exchange of a tropical rain forest. Part II. BioScience 20:1050-1053.

Lewis, J. K. 1971. The grassland biome: A synthesis of structure and function, 1970. pp. 317-387. In N. R. French (ed.), Preliminary Analysis of Structure and Function in Grasslands. Colorado State University, Fort Collins.

Linder, S., and E. Troeng. 1980. Photosynthesis and transpiration of 20-year-old Scots pine. pp. 165-181. IN T. Persson (ed.), Structure and Function of Northern Coniferous Forests -- An Ecosystem Study. Ecol. Bull. 32. Swedish Natural Science Research Council, Stockholm.

Lohammer, T. S., S. Larsson, S. Linder, and S. O. Falk. 1980. FAST - Simulation models of gaseous exchange in Scots pine. pp. 505-523. IN T. Persson (ed.), Structure and Function of Northern Coniferous Forests -- An Ecosystem Study. Ecol. Bull. 32. Swedish Natural Science Research Council, Stockholm.

Lommen, P. W., C. R. Schwintzer, C. S. Yocum, and D. M. Gates. 1971. A model describing photosynthesis in terms of gas diffusion and enzyme kinetics. Planta 98:195-220.

Lossaint, P., and M. Rapp. 1971a. Le cycle du carbone dans les forets de Pinus halepensis. pp. 213-216. IN P. Duvigneaud (ed.), Productivity of Forest Ecosystems. UNESCO, Paris.

Lossaint, P., and M. Rapp. 1971b. Repartition de la matiere organique, productivite et cycles des elements mineraux dans des ecosystemes de climat mediterraneen. pp. 597-617. IN P. Duvingneaud (ed.), Productivity of Forest Ecosystems. UNESCO, Paris.

Ludwig, J. A., and W. G. Whitford. 1981. Short-term water and energy flow in arid ecosystems. pp. 271-299. IN D. W. Goodall, R. A. Perry, and K. M. W. Howes (eds.), Arid-land Ecosystems: Structure, Functioning, and Management. Vol. 2. Cambridge University Press, Cambridge, England.

Lugg, D. G., and T. R. Sinclair. 1981. Seasonal changes in photosynthesis of field grown soybean leaflets. 2. Relation to nitrogen content. Photosynthetica 15:138-144.

Lugo, A. 1970. Photosynthetic studies on four species of rain forest seedling. pp. I-81--I-102. IN H. T. Odum and R. F. Pigeon (eds.), A Tropical Rain Forest. Div. Tech. Information, USAEC, Washington, D.C.

Machta, L. 1971. The role of the oceans and biosphere in the carbon dioxide cycle. pp. 121-145. IN D. Dyrssen and D. Jagner (eds.), The Changing Chemistry of the Oceans. John Wiley, New York.

Madge, D. S. 1965. Leaf fall and litter disappearance in a tropical forest. Pedobiologia 5:273-288.

Malaisse, F., J. Alexandre, R. Freson, G. Goiffinet, and M. Malaisse-Mousset. 1972. The Miombo ecosystem: A preliminary study. pp. 363-405. IN P. M. Golley and F. B. Golley (eds.), Papers From a Symposium on Tropical Ecology With an Emphasis on Organic Productivity. University of Georgia, Institute of Ecology, Athens.

Matsumoto, T. and T. Abe. 1979. The role of termites in an equatorial rain forest ecosystem of West Malaysia. II. Leaf litter consumption on the forest floor. Oecologia 38:261-174.

Medina, E., and M. Zelwer. 1972. Soil respiration in tropical plant communities. pp. 245-267. IN P. M. Golley and F. B. Golley (eds.), Papers From a Symposium on Tropical Ecology With an Emphasis on Organic Productivity. University of Georgia, Institute of Ecology, Athens.

Meentemeyer, V. 1978. Macroclimate and lignin control of litter decomposition rates. Ecology 59:465-472.

Meentenmeyer, V., E. O. Box, and R. Thompson. 1982. World patterns and amounts of terrestrial plant litter production. BioScience 32:125-128.

Menaut, J. C., and J. Cesar. 1979. Structure and primary productivity of Lamto savannas, Ivory Coast. Ecology 60:1197-1210.

Menaut, J. C., and J. Cesar. 1982. The structure and dynamics of a West African savanna. pp. 80-100. IN B. J. Huntley and B. H. Walker (eds.), Ecology of Tropical Savannas. Springer-Verlag, Berlin.

Miller, P. C., B. D. Collier, and F. L. Bunnell. 1975. Development of ecosystem modeling in the tundra biome. pp. 95-115. IN B. C. Patten (ed.), Systems Analysis and Simulation in Ecology. Vol. 3. Academic Press, New York.

Miller, P. C., and L. L. Tieszen. 1972. A preliminary model of processes affecting primary production in the Arctic tundra. Arct. Alp. Res. 4:1-18.

Miller, P. C., W. A. Stoner, and L. L. Tieszen. 1976. A model of stand photosynthesis for the wet meadow tundra, Barrow, Alaska. Ecology 57:411-430.

Miller, P. C., W. C. Oechel, W. A. Stoner, and B. Sveinbjornson. 1978a. Simulation of CO_2 uptake and water relations of four arctic bryophytes at Point Barrow, Alaska. Photosynthetica 12:7-20.

Miller, P. C., W. A. Stoner, L. L. Tieszen, M. Allessio, B. McCown, F. S. Chapin, and G. Shaver. 1978b. A model of carbohydrate, nitrogen, phosphorus allocation and growth in tundra production. pp. 577-598. IN L. L. Tieszen (ed.), Vegetation and Production Ecology of an Alaskan Arctic Tundra. Springer-Verlag, New York.

Misra, C. M., and L. P. Mall. 1975. Photosynthetic structure and standing biomass of a grassland community. Trop. Ecol. 16:76-80.

Monsi, M. 1960. Dry matter production in plants. 1. Schemata of dry matter production. Bot. Mag. (Tokyo) 73:81-90.

Monsi, M., and T. Saeki. 1953. The light factor in plant communities and its significance for dry matter production. Japan. J. Bot. 14:22-52.

Monsi, M., Z. Uchijima, and T. Oikawa. 1973. Structure of foliage canopies and photosynthesis. Annu. Rev. Ecol. Syst. 4:301-327.

Monteith, J. L. 1965. Light distribution and photosynthesis in field crops. Ann. Bot. 29:17-37.

Moore, T. R. 1984. Litter decomposition in a subarctic spruce-lichen woodland, eastern Canada. Ecology 65:299-308

Morris, J. W., J. J. Bezuidenhout, and P. R. Furniss. 1982. Litter decomposition. pp. 535-553. IN B. J. Huntley and B. H. Walker (eds.), Ecology of Tropical Savannas. Springer-Verlag, Berlin.

Murphy, C. E., Jr., and K. R. Knoerr. 1970. A general model for the energy exchange and microclimate of plant communities. pp. 786-797. IN Proceedings, 1970 Summer Computer Simulation Conference. Simulation Council, Inc., La Jolla, Calif.

Murphy, C. E., Jr., T. S. Sinclair, and K. R. Knoerr. 1974. Modeling the photosynthesis of plant stands. pp. 125-147. IN B. R. Strain and W. D. Billings (eds.), Vegetation and Environment. Part VI. Handbook of Vegetation Science. Junk Publ. Co., The Hague, Netherlands.

Naik, M. L., and G. P. Mishra. 1976. Ecological studies of some grasslands of Ambikapur. II. Rate of disappearance of dead plant parts. Trop. Ecol. 17:95-99.

Nakane, K. 1978. A mathematical model of the behavior and vertical distribution of organic carbon in forest soils. II. A revised model taking the supply of root litter into consideration. Japan J. Ecol. 28:169-177.

Nakane, K. 1980. A simulation model of the seasonal variation of cycling of soil organic carbon in forest ecosystems. Japan J. Ecol. 30:19-29.

Nakane, K., and K. Shinozaki. 1978. A mathematical model of the behavior and vertical distribution of organic carbon in forest soils. Japan J. Ecol. 28:111-122.

Natr, L. 1972. Influence of mineral nutrients on photosynthesis of higher plants. Photosynthetica 6:80-99.

Neel, R. B., and J. S. Olson. 1962. Use of Analog Computers for Simulating the Movement of Isotopes in Ecological Systems. ORNL-3172. Oak Ridge National Laboratory, Oak Ridge, TN.

Ng, E., and P. C. Miller. 1975. A model of the effect of tundra vegetation on soil temperatures. pp. 222-226. IN G. Weller and S. A. Bowling (eds.), Climate of the Arctic. 24th Alaska Science Conference, Fairbanks, August 15-17, 1973. Geophysical Institute, University of Alaska, Fairbanks.

Ng, E., and P. C. Miller. 1977. Validation of a model of the effects of tundra vegetation on soil temperatures. Arct. Alp. Res. 9:89-104.

Nishioka, M., and H. Kirita. 1978. Litterfall. pp. 231-238. IN T. Kira, Y. Ono, and T. Hosakaw (eds.), Biological Production in a Warm Temperature Evergreen Oak Forest of Japan. JIBP Synthesis Vol. 18. Japanese Committee for the International Biological Program, Tokyo.

Nishioka, M., K. Hozumi, H. Kirita, and M. Nagano. 1978. Estimation of canopy photosynthesis and respiration. pp. 99-111. IN T. Kira, Y. Ono, and T. Hosakaw (eds.), Biological Production in a Warm Temperature Evergreen Oak Forest of Japan. JIBP Synthesis Vol. 18. Japanese Committee for the International Biological Program, Tokyo.

Nye, P. H. 1961. Organic matter and nutrient cycles under a moist tropical forest. Plant Soil 88:333-346.

O'Connel, A. M., and P. M. A. Menage. 1982. Litterfall and nutrient cycling in karr (Eucalyptus diversicolor F. Muell.) forest in relation to stand age. Aust. J. Ecol. 7:49-62.

Ode, D. J., L. L. Tieszen, and J. C. Lerman. 1980. The seasonal contribution of C_3 and C_4 plant species to primary production in a mixed prairie. Ecology 61:1304-1311.

Odum, H. T. 1970. Summary: An emerging view of the ecological system at El Verde. pp. I-103--I-164. IN H. T. Odum and R. F. Pigeon (eds.), A Tropical Rain Forest. Div. Tech. Information, USAEC, Washington, D.C.

Odum, H. T., A. Lugo, G. Cintron, and C. F. Jordan. 1970. Metabolism and evapotranspiration of some rain forest plants and soils. pp. I-103--I-164. IN H. T. Odum and R. F. Pigeon (eds.), A Tropical Rain Forest. Div. Tech. Information, USAEC, Washington, D.C.

Odum, H. T., B. J. Copeland, and R. Z. Brown. 1963. Direct and optical assay of leaf mass of the lower montane rain forest of Puerto Rico. Proc. Nat. Acad. Sci., U.S.A. 49:429-434.

Odum, H. T., and C. F. Jordan. 1970. Metabolism and evapotranspiration of the lower forest in a giant plastic cylinder. pp. I-165--I-189. IN H. T. Odum and R. F. Pigeon (eds.), A Tropical Rain Forest. Div. Tech. Information, USAEC, Washington, D.C.

Odum, H. T., and R. F. Pigeon (eds.). 1970. A Tropical Rain Forest. Div. Tech. Information, USAEC, Washington, D.C.

Oechel, W. C., and B. Sveinbjornsson. 1978. Primary production processes in arctic bryophytes at Barrow, Alaska. pp. 269-298. IN L. L. Tieszen (ed.), Vegetation and Production Ecology of an Alaskan Arctic Tundra. Springer-Verlag, New York.

Ogawa, H., K. Yoda, K. Ogino, and T. Kira. 1965. Comparative ecological studies on three main types of forest vegetation in Thailand. II. Plant biomass. Nat. Life in Southeastern Asia 4:51-81.

Ohiagu, C. E., and T. G. Wood. 1979. Grass production and decomposition in southern Guinea savanna, Nigeria. Oecologia 40:155-165.

Old, S. M. 1969. Microclimate, fire, and plant production in an Illinois prairie. Ecol. Monogr. 39:355-384.

Olson, J. S. 1963a. Analog computer models for movement of nuclides through ecosystems. pp. 121-125. IN V. Schultz and A. W. Klement, Jr. (eds.), Radioecology. Reinhold, New York.

Olson, J. S. 1963b. Energy storage and the balance of producers and decomposers in ecological systems. Ecology 44:322-332.

Olson, J. S. 1964. Gross and net production of terrestrial vegetation. J. Ecol. 52(Suppl.):99-118.

Olson, J. S. 1971. Primary productivity: Temperate forests, especially American deciduous types. pp. 235-258. IN P. Duvigneaud (ed.), Productivity of Forest Ecosystems. UNESCO, Paris.

Olson, J. S. 1975. Productivity of forest ecosystems. pp. 33-43. IN D. E. Reichle, J. F. Franklin, and D. W. Goodall (eds.), Productivity of World Ecosystems. National Academy of Sciences, Washington, D.C.

Olson, J. S., D. A. Crossley, Jr., W. C. Cate, R. L. Doub, G. Dodson, M. P. Hoglund, R. J. Hutnik, H. D. Waller, R. O. Petty, M. Witkamp, and J. P. Witherspoon. 1961. Forest Ecology at Oak Ridge National Laboratory. Oak Ridge National Laboratory Rep. ORNL-3189, Oak Ridge, TN.

Ondok, J. P., and J. Glosser. 1978. Net photosynthesis and dark respiration in a stand of Pragmites communis Trin. calculated by means of a model. I. Description of the model. Photosynthetica 12:328-336.

O'Rourke, P. A., and W. H. Terjung. 1981. Modeling the influence of cloud amounts and types on leaf net photosynthetic rates inside a mature canopy. Photosynthetica 15:317-329.

Ovington, J. R., and J. S. Olson. 1970. Biomass and chemical content of El Verde lower montane rain forest plants. pp. H-53--H-57. IN H. T. Odum and R. F. Pigeon (eds.), A Tropical Rain Forest. Div. Tech. Information, USAEC, Washington, D.C.

Parnas, H., and J. Radford. 1974. Decomposition submodel. US/IBP Desert Biome Research Memorandum RM 74-64. Utah State University, Logan.

Parton, W. J. 1978. Abiotic section of ELM. pp. 31-53. IN G. S. Innis (ed.), Grassland Simulation Model. Springer-Verlag, New York.

Parton, W. J., and J. S. Singh. 1976. Simulation of Plant Biomass on a Shortgrass and a Tallgrass Prairie with Emphasis on Belowground Processes. US/IBP Grassland Biome Tech. Rep. No. 300. Colorado State University, Fort Collins.

Parton, W. J., and J. S. Singh. 1984. Adapting a biomass simulation model to a tropical grassland. Ecol. Model. 23:151-163.

Parton, W. J., J. S. Singh, and D. C. Coleman. 1978. A model of production and turnover of roots in a shortgrass prairie. J. Appl. Ecol. 44:515-542.

Parton, W. J., and P. G. Risser. 1979. Simulated impact of management practices upon the tallgrass prairie. pp. 135-155. IN N. R. French (ed.), Perspectives in Grassland Ecology. Springer-Verlag, New York.

Patten, B. C. 1972. A simulation of the shortgrass prairie ecosystem. Simulation 19:177-186.

Pendleton, D. F., J. W. Menke, W. A. Williams, and R. G. Woodmansee. 1983. Annual grassland ecosystem model. Hilgardia 51:1-44.

Penfound, W. T., and R. W. Kelting. 1950. Some effects of winter burning on a moderately grazed pasture. Ecology 31:554-560.

Perry, T. O. 1972. Dry matter production of deciduous trees -- a new model. pp. 167-170. IN C. E. Murphy, J. D. Hesketh, and B. R. Strain (eds.), Modeling the Growth of Trees. EDFB-IBP-72-11. Oak Ridge National Laboratory, Oak Ridge, TN.

Persson, T. (ed.). 1980. Structure and Function in Northern Coniferous Forests -- An Ecosystem Study. Ecol. Bull. 32. Swedish Natural Science Research Council, Stockholm.

Persson, T., E. Baath, M. Clarholm, H. Lundkuist, B. E. Soderstrom, and B. Sohlenius. 1980. Trophic structure, biomass dynamics, and carbon metabolism of soil organisms in a Scots pine forest. pp. 419-459. IN T. Persson (ed.). Structure and Function in Northern Coniferous Forests -- An Ecosystem Study. Ecol. Bull. 32. Swedish Natural Science Research Council, Stockholm.

Peterson, D. L., and G. L. Rolfe. 1982. Nutrient dynamics and decomposition of litterfall in flood-plain and upland forests of central Illinois. For. Sci. 28:667-681.

Piene, H., and K. Van Cleve. 1978. Weight loss of litter and cellulose bags in a thinned white spruce forest in interior Alaska. Can. J. For. Res. 8:42-46.

Plewczynska-Kuras, U. 1974. Analysis of a sheep pasture ecosystem in the Pieniny Mountains (the Carpathians). IV. Biomass of the upper and underground parts of plants and of organic detritus. Ekol. Pol. 22:517-526.

Pressland, A. J. 1982. Litter production and decomposition from an overstory of Eucalyptus species on two catchments in the New England region of New South Wales. Aust. J. Ecol. 7:171-180.

Promnitz, L. C. 1975. A photosynthate allocation model for tree growth. Photosynthetica 9:1-15.

Prusinkiewicz, Z. 1978. Application of a mathematical model of organic matter accumulation and decomposition for comparative studies of various forest floor types. Ecol. Pol. 26:347-357.

Prusinkiewicz, Z. 1980. A mathematical model of energy budgets of forest humus of the mull, moder, and mor types in Poland. Geoderma 23:79-93.

Rai, B., and A. K. Srivastava. 1982. Decomposition of leaf litter in relation to microbial populations and their activity in a tropical dry mixed deciduous forest. Pedobiologia 24:151-159.

Rastorfer, J. R. 1978. Composition and bryomass of the moss layers of two wet-tundra-meadow communities near Barrow, Alaska. pp. 169-183. IN L. L. Tieszen (ed.), Vegetation and Production Ecology of an Alaskan Arctic Tundra. Springer-Verlag, New York.

Redetzke, K. A., and G. M. Van Dyne. 1979. Data-based, empirical, dynamic matrix modeling of rangeland grazing systems. pp. 157-172. IN N. R. French (ed.), Perspectives in Grassland Ecology. Springer-Verlag, New York.

Reed, K. L., E. R. Hamerly, B. E. Dinger, and P. G. Travis. 1976. An analytical model for field measurement of photosynthesis. J. Appl. Ecol. 13:925-942.

Reichle, D. E. (ed.). 1970. Analysis of Temperate Forest Ecosystems. Springer-Verlag, New York.

Reichle, D. E. (ed.). 1981. Dynamic Properties of Forest Ecosystems. Cambridge University Press, Cambridge, England.

Reichle, D. E., B. E. Dinger, N. T. Edwards, W. F. Harris, and P. Sollins. 1973a. Carbon flow and storage in a forest ecosystem. pp. 345-365. IN G. M. Woodwell and E. V. Pecan (eds.), Carbon and the Biosphere. Tech. Inf. Center, USAEC, Washington, D.C.

Reichle, D. E., R. V. O'Neill, and J. S. Olson (compilers), L. Kern (ed.). 1973b. Modeling forest ecosystems. EDFB-IBP-73-7. Oak Ridge National Laboratory, Oak Ridge, TN.

Reiners, W. A. 1968. Carbon dioxide evolution from the floor of three Minnesota forests. Ecology 49:471-483.

Reynolds, J. F., B. R. Strain, G. L. Cunningham, and K. R. Knoerr. 1980. Predicting primary productivity for forest and desert ecosystem models. pp. 169-207. IN J. D. Hesketh and J. W. Jones (eds.), Predicting Photosynthesis for Ecosystem Models. Vol. 2. CRC Press, Boca Raton, Fl.

Rice, E. L., and W. T. Penfound. 1954. Plant succession and yield of living plant material in a plowed prairie in central Oklahoma. Ecology 35:176-180.

Risser, P. G., E. C. Birney, H. D. Blocker, S. W. May, W. J. Parton, and J. A. Weins. 1981. The True Prairie Ecosystem. Hutchinson Ross, Stroudsburg, Pa.

Rodhe, H., and A. Bjorkstrom. 1979. Some consequences of non-proportionality between fluxes and reservoir contents in natural systems. Tellus 31:269-278.

Rodin, L. E. 1981. Primary productivity. pp. 169-198. IN D. W. Goodall, R. A. Perry, and K. M. W. Howes (eds.), Arid-land Ecosystems: Structure, Functioning, and Management. Vol 2. Cambridge University Press, Cambridge, England.

Rogers, H. H., G. E. Bingham, J. F. Thomas, J. M. Smith, D. W. Israel, and K. A. Surano. 1982. Effects of long-term CO_2 concentrations on field grown crops and trees. pp. 9-45. IN S. Brown (ed.), Global Dynamics of Biosphere Carbon. CONF-8108131. U.S. Department of Energy, Washington, D.C.

Rosswall, T., and O. W. Heal (eds.). 1975. Structure and Function of Tundra Ecosystems. Ecol. Bull. 20. Swedish Natural Science Research Council, Stockholm.

San Jose, J. J., and E. Medina. 1975. Effect of fire on organic matter production and water balance in a tropical savanna. pp. 265-271. IN F. B. Golley and E. Medina (eds.), Tropical Ecological Systems: Trends in Terrestrial and Aquatic Research. Springer-Verlag, Berlin.

San Jose, J. J., and E. Medina. 1976. Organic matter production in the Trachypogon savannas in Venezuela. Trop. Ecol. 17:113-124.

San Jose, J. J., F. Berrade, and J. Ramirez. 1982. Seasonal changes of growth, mortality, and disappearance of belowground root biomass in the Trachypogon savanna grass. Acta Oecologia 3:347-358.

Satoo, T. 1970. A synthesis of studies by the harvest method: Primary production relations in the temperate deciduous forests of Japan. pp. 55-72. IN D. E. Reichle (ed.), Analysis of Temperate Forest Ecosystems. Springer-Verlag, Berlin.

Satoo, T. 1971. Primary production relations of coniferous forests in Japan. pp. 191-210. IN P. Duvigneaud (ed.), Productivity of Forest Ecosystems. UNESCO, Paris.

Sauer, R. H. 1978. A simulation model for grassland primary producer phenology and biomass dynamics. pp. 55-87. IN G. S. Innis (ed.), Grassland Simulation Model. Springer-Verlag, New York.

Schulze, E. D. 1970. Der CO_2 Gaswechsel der Buche (Fagus sylvatica L.) in Abhangigkeit von dem Klimafaktoren in Frieland. Flora 159:177-232.

Schulze, E. D., and W. Koch. 1971. Measurements of primary productivity with cuvettes. pp. 141-156. IN P. Duvigneaud (ed.), Productivity of Forest Ecosystems. UNESCO, Paris.

Shawcroft, R. W. 1970. Water relations and stomatal response in a corn field. Ph.D. dissertation, Cornell University, Ithaca, N.Y.

Shawcroft, R. W. 1971. The energy budget at the earth's surface: Water relations and stomatal response in a corn field. Tech. Rep. ECOM 2-68-I-7:1-94. Microclimate Investigations, U.S. Dept. of Agric., Ithaca, New York.

Shawcroft, R. W., E. R. Lemon, and D. W. Stewart. 1973. Estimation of internal crop water status from meteorological and plant parameters. pp. 449-459. IN Plant Response to Climatic Factors. UNESCO, Paris.

Shawcroft, R. W., E. R. Lemon, L. H. Allen, Jr., D. W. Stewart, and S. E. Jensen. 1974. The soil-plant-atmosphere model and some of its applications. Agric. Meteorol. 14:287-307.

Shrimal, R. L., and L. N. Vyas. 1975. Net primary production in grasslands at Udaipur, India. pp. 265-271. IN F. B. Golley and E. Medina (eds.), Tropical Ecological Systems: Trends in Terrestrial and Aquatic Research. Springer-Verlag, Berlin.

Shugart, H. H., Jr., R. A. Goldstein, R. V. O'Neill, and J. B. Mankin. 1974. TEEM: A terrestrial ecosystem energy model for forests. Oecol. Plant. 9:231-264.

Sims, P. L., and J. S. Singh. 1971. Herbage dynamics and net primary production in certain ungrazed grasslands in North America. pp. 59-124. IN N. R. French (ed.), Preliminary Analysis of Structure and Function in Grasslands. Colorado State University, Fort Collins.

Sims, P. L., and J. S. Singh. 1978a. The structure and function of ten western North American grasslands. II. Intra-seasonal dynamics in primary producer compartments. J. Ecol. 66:547-572.

Sims, P. L., and J. S. Singh. 1978b. The structure and function of ten western North American grasslands. III. Net primary production, turnover and efficiencies of energy capture and water use. J. Ecol. 66:573-597.

Sims, P. L., and J. S. Singh. 1978c. The structure and function of ten western North American grasslands. IV. Compartmental transfers and energy flow within the ecosystem. J. Ecol. 66:983-1009.

Sinclair, T. R., C. E. Murphy, Jr., and K. R. Knoerr. 1976. Development and evaluation of simplified models for simulating canopy photosynthesis and transpiration. J. Appl. Ecol. 13:813-830.

Sinclair, T. R., J. Goudriaan, and C. T. de Wit. 1977. Mesophyll resistance of CO_2 compensation concentration in leaf photosynthesis models. Photosynthetica 11:56-65.

Sinclair, T. R., and R. H. Rand. 1979. Mathematical analysis of cell CO_2 exchange under high CO_2 concentrations. Photosynthetica 13:239-244.

Singh, J. S. 1968. Net aboveground community productivity in grasslands at Varanasi. pp. 631-654. IN R. Misra and B. Gopal (eds.), Recent Advances in Tropical Ecology. Part II. International Society for Tropical Ecology, Varanasi, India.

Singh, J. S. 1973. A compartment model of herbage dynamics for Indian tropical grasslands. Oikos 24:367-372.

Singh, J. S. 1974. Seasonal variability in composition, plant biomass, and net productivity of a tropical grassland at Kurukshetra, India. Ecol. Monogr. 44:351-376.

Singh, J. S., and G. S. Swartzman. 1974. A dynamic programming approach to optimal grazing strategies using a succession model for a tropical grassland. J. Appl. Ecol. 11:537-548.

Singh, J. S., and P. S. Yadava. 1972. Biomass structure and net primary productivity in the grassland ecosystem at Kurukshetra. pp. 59-74. IN P. M. Golley and F. B. Golley (eds.), Papers From a Symposium on Tropical Ecology With an Emphasis on Organic Productivity. University of Georgia, Institute of Ecology, Athens.

Singh, J. S., and P. S. Yadava. 1974. Seasonal variation in composition, plant biomass, and net primary productivity of a tropical grassland at Kurukshetra, India. Ecol. Monogr. 44:351-376.

Singh, V. N., and R. S. Ambasht. 1975. Biotic stress and variability in structure and organic (net primary) production of grassland communities, Varanasi, India. Trop. Ecol. 16:86-95.

Skre, O. 1975. CO_2 exchange in Norwegian tundra plants studied by infrared gas analyzer technique. pp. 168-183. IN F. E. Wielgolaski (ed.), Fennoscandian Tundra Ecosystems. Part 1. Plants and Microorganisms. Springer-Verlag, Berlin.

Smiens, F. E., and D. E. Olsen. 1970. Species composition and production of a native northwestern Minnesota tallgrass prairie. Am. Midl. Nat. 84:398-410.

Sollins, P., D. E. Reichle, and J. S. Olson. 1973. Organic matter budget and model for a southern Appalachian Liriodendron forest. EDFB-IBP-73-2. Oak Ridge National Laboratory, Oak Ridge, TN.

Sollins, P., R. A. Goldstein, J. B. Mankin, C. E. Murphy, and G. L. Swartzman. 1981. Analysis of forest growth and water balance using complex ecosystem models. pp. 537-565. IN D. E. Reichle (ed.), Dynamic Properties of Forest Ecosystems. Cambridge University Press, Cambridge, England.

Sollins, P., R. H. Waring, and D. W. Cole. 1974. A systematic framework for modelling and studying the physiology of a coniferous forest ecosystem. pp. 7-20. IN R. H. Waring and R. L. Edmonds (eds.), Integrated Research in the Coniferous Forest Biome. Coniferous Biome Bull. 5. University of Washington, Seattle.

Sollins, P., W. F. Harris, and N. T. Edwards. 1976. Simulating the physiology of a temperate deciduous forest. pp. 173-218. IN B. C. Patten (ed.), Systems Analysis and Simulation in Ecology. Vol. 4. Academic Press, New York.

Sonneson, M. (ed.). 1980. Ecology of a Sub-arctic Mire. Ecol. Bull. 30. Swedish Natural Science Research Council, Stockholm.

Stephens, G. R., and P. E. Waggoner. 1970. Carbon dioxide exchange of a tropical rain forest. Part 1. BioScience 20:1050-1053.

Stewart, D. H. 1970. A simulation of net photosynthesis of field corn. Ph.D. dissertation, Cornell University, Ithaca, N.Y.

Stewart, D. W., and E. R. Lemon. 1969. The energy budget at the earth's surface: A simulation of net photosynthesis of field corn. Tech. Rep. ECOM 2-68-I-6:1-132. Microclimate Investigations. U.S. Dept. Agric., Ithaca, N.Y.

Stoner, W. A., P. C. Miller, and L. L. Tieszen. 1978. A model of plant growth and phosphorus allocation for Dupontia fisheri in coastal wet tundra. pp. 559-576. IN L. L. Tieszen (ed.), Vegetation and Production Ecology of an Alaskan Arctic Tundra. Springer-Verlag, New York.

Stoner, W. A., P. C. Miller, and W. C. Oechel. 1978. Simulation of the effect of the tundra vascular plant canopy on the productivity of four moss species. pp. 371-387. IN L. L. Tieszen (ed.), Vegetation and Production Ecology of an Alaskan Arctic Tundra. Springer-Verlag, New York.

Strain, B. R. 1969. Seasonal adaptations in photosynthesis and respiration in four desert shrubs growing in situ. Ecology 50:511-513.

Strugnell, R. G., and C. D. Pigott. 1978. Biomass, shoot production, and grazing of two grasslands in the Rwenzori National Park, Uganda. J. Ecol. 66:73-96.

Struik, G. J. 1965. Growth patterns of some native annual and perennial herbs in southern Wisconsin. Ecology 46:401-420.

Struik, G. J., and J. R. Bray. 1970. Root/shoot ratios of native forest herbs and Zea mays at different soil moisture levels. Ecology 51:892-893.

Swift, M. J., A. Russel-Smith, and T. J. Perfect. 1981. Decomposition and mineral-nutrient dynamics of plant litter in a regenerating bush fallow in sub-humid tropical Nigeria. J. Ecol. 69:981-995.

Tanner, E. V. J. 1980. Litterfall in mature rain forests of Jamaica and its relation to climate. J. Ecol. 68:833-848.

Teskey, R. O., C. C. Grier, and T. M. Hinckley. 1984. Change in photosynthesis and water relations with age and season in Abies amabilis. Can. J. For. Res. 14:77-84.

Tewary, C. K., U. Pandey, and J. S. Singh. 1982. Soil and litter respiration rates in different microhabitats of a mixed oak-conifer forest and their control by edaphic conditions and substrate quality. Plant Soil 65:233-238.

Thomas, R. W., and R. J. Huggett. 1980. Modelling in Geography: A Mathematical Approach. Barnes and Noble, Totowa, N.J.

Thomas, W. A. 1968. Decomposition of loblolly pine needles with and without addition of dogwood leaves. Ecology 49:568-571.

Tieszen, L. L. 1975. CO_2 exchange in the Alaskan arctic tundra: Seasonal changes in the rate of photosynthesis of four species. Photosynthetica 9:376-390.

Tieszen, L. L. (ed.). 1978a. Vegetation and Production Ecology of an Alaskan Arctic Tundra. Springer-Verlag, New York.

Tieszen, L. L. 1978b. Photosynthesis in the principal Barrow, Alaska, species: A summary of field and laboratory responses. pp. 241-268. IN L. L. Tieszen (ed.), Vegetation and Production Ecology of an Alaskan Arctic Tundra. Springer-Verlag, New York.

Tieszen, L. L. 1978c. Summary. pp. 621-645. IN L. L. Tieszen (ed.), Vegetation and Production Ecology of an Alaskan Arctic Tundra. Springer-Verlag, New York.

Tieszen, L. L., P. C. Miller, and W. C. Oechel. 1980. Photosynthesis. pp. 102-139. IN J. Brown, P. C. Miller, L. L. Tieszen, and F. L. Bunnell (eds.), An Arctic Ecosystem: The Coastal Tundra at Barrow, Alaska. Dowden, Hutchinson, and Ross, Inc., Stroudsburg, Pa.

Tooming, H. 1967. Mathematical model of plant photosynthesis considering adaptation. Photosynthetica 1:233-240.

Traczyk, T., and K. Kochev. 1974. Analysis of a sheep pasture ecosystem in the Pieniny Mountains (the Carpathians). III. Primary production of Lolio-Cynosuretum association. Ekol. Pol. 22:505-516.

Turnbull, C. R. A., and J. L. Madden. 1983. Relationship of litterfall to basal area and climatic variables in cool temperate forests of southern Tasmania. Aust. J. Ecol. 8:425-431.

Uchijima, Z., and K. Inoue. 1970. Studies of energy and gas exchange within crop canopies. Part 9. Simulation of CO_2 environment within a canopy. J. Agric. Meteorol. 26:5-18.

Upandhyaya, S. D., and V. P. Singh. 1981. Microbial turnover of organic matter in a tropical grassland soil. Pedobiologia 21:100-109.

Uvarov, A. V. 1982. Decomposition of clover green matter in an arable soil in the Moscow region. Pedobiologia 24:9-21.

Valentine, W. 1973. Terrestrial Models: Plant Processes (Versions I, II, and III). US/IBP Desert Biome Research Memorandum RM 73-54. Utah State University, Logan.

Valentine, W. 1974. Terrestrial Models: Plant Sub-models - the Fourth Version. US/IBP Desert Biome Research Memorandum RM 74-56. Utah State University, Logan.

Van Dyne, G. M. 1978. Perspectives on the ELM model and modeling efforts. pp. v-xx. IN G. S. Innis (ed.), Grassland Simulation Model. Springer-Verlag, New York.

Van Dyne, G. M., and Z. Abramsky. 1975. Agricultural systems models and modelling: An overview. pp. 23-106. IN G. E. Dalton (ed.), Study of Agricultural Systems. Applied Science Publishers, London.

Van Keulen, H., and C. T. de Wit. 1975. Actual and potential herbage production in arid regions: An annotated bibliography of a joint Dutch-Israeli research project (1972-1975). Report of the Department of Theoretical Production Ecology, Institute of Biological and Chemical Research on Field Crops and Herbage (IBS), Wageningen.

Van Keulen, H., and C. T. de Wit. 1981. Simulation of plant production in arid regions: A hierarchical approach. pp. 433-445. IN D. W. Goodall, R. A. Perry, and K. M. W. Howes (eds.), Arid-land Ecosystems: Structure, Functioning, and Management. Vol. 2. Cambridge University Press, Cambridge, England.

Varshney, C. K. 1972. Productivity of Delhi grasslands. pp. 27-42. IN P. M. Golley and F. B. Golley (eds.), Papers From a Symposium on Tropical Ecology With an Emphasis on Organic Productivity. University of Georgia, Institute of Ecology, Athens.

Virzo de Santo, A., A. Alfani, and S. Sapio. 1976. Soil metabolism in beech forests of Monte Taburno. Oikos 27:144-152.

Vossbrinck, C. A., D. C. Coleman, and T. A. Woolley. 1979. Abiotic and biotic factors in litter decomposition in a semiarid grassland. Ecology 60:265-271.

Wann, M., C. D. Raper, Jr., and H. L. Lucas, Jr. 1978. A dynamic model for plant growth: A simulation of dry matter accumulation for tobacco. Photosynthetica 12:121-136.

Warembourg, F. R., and E. A. Paul. 1977. Seasonal transfers of assimilated ^{14}C in grassland: Plant production and turnover, soil and plant respiration. Soil Biol. Biochem. 9:295-301.

Whitmore, T. C. 1975. Tropical Rain Forests of the Far East. Clarendon Press, Oxford.

Wiegert, R. G., and P. Murphy. 1970. Effect of season, species, and location on the disappearance rate of leaf litter in a Puerto Rican rain forest. pp. H-101--H-104. IN H. T. Odum and R. F. Pigeon (eds.), A Tropical Rain Forest. Div. Tech. Inf., USAEC, Washington, D.C.

Wielgolaski, F. E. (ed.). 1975a. Fennoscandian Tundra Ecosystems. Part 1. Plants and Microorganisms. Springer-Verlag, Berlin.

Wielgolaski, F. E. (ed.). 1975b. Fennoscandian Tundra Ecosystems. Part 2. Animals and Systems Analysis. Springer-Verlag, Berlin.

Wielgolaski, F. E., K. P. Haydock, and D. J. Connor. 1972. A Grazing Lands Plant-decomposition, Carbon-mineral Simulation Model. US/IBP Grassland Biome Tech. Rep. No. 203. Colorado State University, Ft. Collins.

Wildung, R. E., T. R. Garland, and R. L. Bushbom. 1975. The interdependent effects of soil temperature and water content on soil respiration rate and plant root decomposition in arid grassland studies. Soil Biol. Biochem. 7:373-378.

Williams, W. A., R. S. Loomis, and P. De T. Alvin. 1972. Environments of evergreen rain forest on the lower Rio Negro, Brazil. Trop. Ecol. 13:65-78.

Williamson, P. 1976. Aboveground primary production of chalk grassland allowing for leaf death. J. Ecol. 64:1059-1075.

Witkamp, M. 1966a. Rates of carbon dioxide evolution from the forest floor. Ecology 47:492-494.

Witkamp, M. 1966b. Decomposition of leaf litter in relation to environment, microflora, and microbial respiration. Ecology 47:194-201.

Witkamp, M., and J. van der Drift. 1961. Breakdown of forest litter in relation to environmental factors. Plant Soil 15:295-311.

Woodwell, G. M., and D. B. Botkin. 1970. Metabolism of terrestrial ecosystems by gas exchange techniques: The Brookhaven approach. pp. 73-85. IN D. E. Reichle (ed.), Analysis of Temperate Forest Ecosystems. Springer-Verlag, Berlin.

Yoda, K. 1967. Comparative ecological studies on three main types of forest vegetation in Thailand. III. Community respiration. Nat. Life in Southeastern Asia 5:83-148.

Yoda, K. 1978a. Respiration studies in Pasoh Forest plantations. Malay. Nat. J. 30:259-279.

Yoda, K. 1978b. Estimation of community respiration. pp. 112-131. IN T. Kira, Y. Ono, and T. Hosokaw (eds.), Biological Production in a Warm Temperate Evergreen Oak Forest of Japan. JIBP Synthesis Vol. 18. Japanese Committee for the International Biological Program, Tokyo.

Yoda, K., K. Shinozaki, H. Ogawa, K. Hozumi, and T. Kira. 1965. Estimation of the total amount of respiration in woody organs of trees and forest communities. J. Biol., Osaka City Univ. 16:15-26.

Yoneda, T., and H. Kirita. 1978. Soil respiration. pp. 239-249. IN T. Kira, Y. Ono, and T. Hosakaw (eds.), Biological Production in a Warm Temperate Evergreen Oak Forest of Japan. JIBP Synthesis Vol. 18. Japanese Committee for the International Biological Program, Tokyo.

Zelitch, I. 1969. Mechanisms of carbon fixation and associated physiological responses. pp. 207-233. IN J. D. Eastin, F. A. Haskins, C. Y. Sullivan, and C. H. M. Van Bavel (eds.), Physiological Aspects of Crop Yield. Amer. Soc. Agron., Madison, Wis.

INTERNAL DISTRIBUTION

1. S. I. Auerbach
2. C. F. Baes, III
3. N. H. Cutshall
4. V. H. Dale
5-9. D. L. DeAngelis
10. M. I. Dyer
11. W. R. Emanuel
12. M. P. Farrell
13. W. F. Furth
14. R. H. Gardner
15. C. W. Gehrs
16. S. G. Hildebrand
17. G. G. Killough, Jr.
18. B. L. Kimmel
19-23. A. W. King
24. J. R. Krummel
25. P. J. Mulholland
26. J. S. Olson
27. R. V. O'Neill
28. J. J. Pastor
29. T.-H. Peng
30. A. M. Perry, Jr.
31. W. M. Post
32. D. E. Reichle
33. A. M. Solomon
34. J. R. Trabalka
35. R. I. Van Hook
36. L. D. Voorhees
37. D. C. West
38. CDIC Files
39. Central Research Library
40-54. ESD Library
55-56. Laboratory Records Department
57. Laboratory Records, RC
58. ORNL Patent Office
59. ORNL Y-12 Technical Library

EXTERNAL DISTRIBUTION

60. Thomas V. Armentano, Director, Biotic Resources Program, Holcomb Research Institute, Butler University, 4600 Sunset Avenue, Indianapolis, IN 46208
61. Robert B. Bacastow, Geological Research Division, Scripps Institution of Oceanography, University of California, 2314 Ritter Hall, A-020, La Jolla, CA 92093
62. Bert Bolin, Arrhenius Laboratory, Department of Meteorology, University of Stockholm, S-106 91 Stockholm, SWEDEN
63. Philippe Bourdeau, Head of Environment, Raw Materials and Materials Technology, Commission of the European Communities, Rue de la Loi 200, Wetstraat 200, 1049 Brussels, BELGIUM
64. Peter G. Brewer, Department of Chemistry, Woods Hole Oceanographic Institution, Woods Hole, MA 02543
65. Wallace S. Broecker, Lamont-Doherty Geological Observatory of Columbia University, Palisades, NY 10964
66. Sandra Brown, Department of Forestry, University of Illinois, 110 Mumford Hall, 1301 West Gregory Drive, Urbana, IL 61801
67. J. Thomas Callahan, Associate Director, Ecosystem Studies Program, Room 336, 1800 G Street, NW, National Science Foundation, Washington, DC 20550
68. Chen-Tung Arthur Chen, College of Oceanography, Oregon State University, Corvallis, OR 97331
69. Roger C. Dahlman, U.S. Department of Energy, Room J-311, ER-12, Washington, DC 20545
70. Prof. Dr. Egon T. Degens, Geologisch-Paläontologisches Institut und Museum, Universität Hamburg, Bundestrasse 55, D-2000 Hamburg 13, FEDERAL REPUBLIC OF GERMANY

71. Ellen M. Druffel, Department of Chemistry, Woods Hole Oceanographic Institution, Woods Hole, MA 02543
72. Paul G. Falkowski, Oceanographic Sciences Division, Brookhaven National Laboratory, Associated Universities, Inc., Upton, Long Island, NY 11973
73. G. J. Foley, Office of Environmental Process and Effects Research, U.S. Environmental Protection Agency, 401 M Street, SW, RD-682, Washington, DC 20460
74. Hans D. Freyer, Institute of Atmospheric Chemistry, Nuclear Research Center (KFA), D-5170 Julich, FEDERAL REPUBLIC OF GERMANY
75. Inez Yau-Sheung Fung, NASA Goddard Space Flight Center, Institute for Space Studies, 2880 Broadway, New York, NY 10025
76. C. R. Goldman, Professor of Limnology, Director of Tahoe Research Group, Division of Environmental Studies, University of California, Davis, CA 94616
77. Charles A. S. Hall, Division of Biological Sciences, Section of Ecology and Systematics, Corson Bldg., 127 Langmuir Hall, Cornell University, Ithaca, NY 14853-0239
78. W. Franklin Harris, Deputy Division Director, Division of Biotic Systems and Resources, National Science Foundation, 1800 G Street, NW, Room 1140, Washington, DC 20550
79. Henry G. Hengeveld, CO_2/Climate Advisor, Canadian Climate Centre, Environment Canada, 4905 Dufferin Street, Downsview, Ontario M3H 5T4, CANADA
80. Bruce B. Hicks, Director, Atmospheric Turbulence and Diffusion Division, National Oceanic and Atmospheric Administration, U.S. Department of Commerce, P.O. Box E, Oak Ridge, TN 37831
81. Martin I. Hoffert, Department of Applied Science, New York University, 26-36 Stuyvesant Street, New York, NY 10003
82. Richard A. Houghton, The Ecosystems Center, Marine Biological Laboratory, 167 Water Street, Woods Hole, MA 02543
83. J. W. Huckabee, Project Manager, Environmental Assessment Department, Electric Power Research Institute, 3412 Hillview Avenue, P.O. Box 10412, Palo Alto, CA 94303
84. Boyd A. Hutchison, Atmospheric Turbulence and Diffusion Division, National Oceanic and Atmospheric Administration, U.S. Department of Commerce, P.O. Box E, Oak Ridge, TN 37831
85. Carl F. Jordan, Senior Ecologist, The Institute of Ecology, University of Georgia, Athens, GA 30602
86. George Y. Jordy, Director, Office of Program Analysis, Office of Energy Research, ER-30, G-226, U.S. Department of Energy, Washington, DC 20545
87. Charles D. Keeling, Scripps Institution of Oceanography, University of California-San Diego, 2314 Ritter Hall, A-020, La Jolla, CA 92093
88. F. A. Koomanoff, Director, Carbon Dioxide Research Division, Office of Energy Research, Room J-309, ER-12, U.S. Department of Energy, Washington, DC 20545
89. John A. Laurmann, Executive Scientist, Engineering Sciences, Gas Research Institute, 8600 West Bryn Mawr Avenue, Chicago, IL 60631

90. Prof. Dr. Helmut Lieth, Fachbereich Biologie/Chemie der Universität Osnabrück, Postfach 4469, Barbarastraße 11, D-4500 Osnabrück, FEDERAL REPUBLIC OF GERMANY
91. Austin Long, Department of Geosciences, Laboratory of Isotope Geochemistry, The University of Arizona, Tucson, AZ 85721
92. Ariel E. Lugo, Project Leader, U.S. Department of Agriculture, Forest Service, Southern Forest Experiment Station, Institute of Tropical Forestry, P.O. Box AQ, Rio Piedras, PR 00928
93. Gregg Marland, Oak Ridge Associated Universities, Institute for Energy Analysis, P.O. Box 117, Oak Ridge, TN 37831
94. Helen McCammon, Director, Ecological Research Division, Office of Health and Environmental Research, Office of Energy Research, MS-E201, ER-75, Room E-233, Department of Energy, Washington, DC 20545
95. Harold A. Mooney, Department of Biological Sciences, Stanford University, Stanford, CA 94305
96. Berrien Moore III, Director, Complex Systems Research Center, O'Kane House, University of New Hampshire, Durham, NH 03824
97. Hans Oeschger, Physikalisches Institut, Universität Bern, Sidlerstrasse 5, CH-3012 Bern, SWITZERLAND
98. William S. Osburn, Jr., Ecological Research Division, Office of Health and Environmental Research, Office of Energy Research, MS-E201, EV-33, Room F-216, Department of Energy, Washington, DC 20545
99. H. Gote Ostlund, Rosenstiel School of Marine and Atmospheric Science, Tritium Laboratory, University of Miami, 4600 Rickenbacker Causeway, Miami, FL 33149
100. Eldor A. Paul, Department of Plant and Soil Biology, College of Natural Resources, 108 Hilgard Hall, University of California-Berkeley, Berkeley, CA 94720
101. Graeme I. Pearman, Commonwealth Scientific and Industrial Research Organization, Division of Atmospheric Research, Private Bag No. 1, Mordialloc, Victoria 3195, AUSTRALIA
102. Ralph M. Perhac, Director, Environmental Assessment Department, Electric Power Research Institute, 3412 Hillview Avenue, P. O. Box 10412, Palo Alto, CA 94303
103. James T. Peterson, Director, Geophysical Monitoring for Climatic Change, U.S. Department of Commerce, National Oceanic and Atmospheric Administration, Environmental Research Laboratories, 325 Broadway, Boulder, CO 80303
104. Irwin Remson, Department of Applied Earth Sciences, Stanford University, Stanford, CA 94305
105. Roger R. Revelle, Program in Science, Technology, and Public Affairs (B-007), Scripps Institution of Oceanography, University of California-San Diego, La Jolla, CA 92093
106. John F. Richards, Department of History, Duke University, 6727 College Station, Durham, NC 27708
107. Ralph M. Rotty, Oak Ridge Associated Universities, Institute for Energy Analysis, P.O. Box 117, Oak Ridge, TN 37831

108. William H. Schlesinger, Department of Botany, Duke University, Durham, NC 27708
109. R. J. Stern, Director, Office of Environmental Compliance, MS PE-25, FORRESTAL, U.S. Department of Energy, 1000 Independence Avenue, SW, Washington, DC 20585
110. Boyd R. Strain, Phytotron, Department of Botany, Duke University, Durham, NC 27708
111. Minze Stuiver, Department of Geological Sciences, Quaternary Isotope Laboratory, AK-60, University of Washington, Seattle, WA 98195
112. Eric T. Sundquist, U.S. Department of the Interior, U.S. Geological Survey, 431 National Center, MS-431, Reston, VA 22092
113. Christopher Uhl, College of Science, Department of Biology, 202 Buckhout Laboratory, The Pennsylvania State University, University Park, PA 16802
114. James A. Viecelli, Associate Division Leader, T Division, Physics Department, Lawrence Livermore National Laboratory, P.O. Box 808 (L-71), Livermore, CA 94550
115. Robert L. Watters, Ecological Research Division, Office of Health and Environmental Research, Office of Energy Research, MS-E201, ER-75, Room F-226, Department of Energy, Washington, DC 20545
116. Raymond G. Wilhour, Chief, Air Pollution Effects Branch, Corvallis Environmental Research Laboratory, U.S. Environmental Protection Agency, 200 SW 35th Street, Corvallis, OR 97330
117. Frank J. Wobber, Division of Ecological Research, Office of Health and Environmental Research, Office of Energy Research, MS-E201, Department of Energy, Washington, DC 20545
118. M. Gordon Wolman, The Johns Hopkins University, Department of Geography and Environmental Engineering, Baltimore, MD 21218
119. Robert W. Wood, Director, Division of Pollutant Characterization and Safety Research, Department of Energy, Washington, DC 20545
120. George M. Woodwell, Director, The Ecosystems Center, Marine Biological Laboratory, 167 Water Street, Woods Hole, MA 02543
121. Paul J. Zinke, Department of Forestry, and Natural Resources, Mulford Hall, University of California-Berkeley, Berkeley, CA 94720
122. Office of Assistant Manager for Energy Research and Development, Oak Ridge Operations, P. O. Box E, Department of Energy, Oak Ridge, TN 37831

123-149. Technical Information Center, Oak Ridge, TN 37831