OAK RIDGE NATIONAL LABORATORY LIBRARY
3 4456 0044447 3

AD
ORNL/TM-9649

OAK RIDGE NATIONAL LABORATORY

MARTIN MARIETTA

A System for the Continuous Generation of Phosphorous Aerosols from Red Phosphorus-Butyl Rubber

Chemical Characterization and Toxicological Evaluation of Airborne Mixtures

FINAL REPORT

R. W. Holmberg
J. H. Moneyhun
T. M. Gayle

JUNE, 1985

Supported by

U.S. ARMY MEDICAL RESEARCH AND DEVELOPMENT COMMAND
Fort Detrick, Frederick, MD 21701-5012

Army Project Order Nos. 9600, 0027, 1807 and 2802

Project Officer: James C. Eaton

Health Effects Research Division
U. S. ARMY MEDICAL BIOENGINEERING RESEARCH
AND DEVELOPMENT LABORATORY

Fort Detrick, Frederick, MD 21701-5012

Approved for Public Release;
Distribution Unlimited

The findings in this report are not to be construed as an official Department of the Army position unless so designated by other authorized documents.

OAK RIDGE NATIONAL LABORATORY
CENTRAL RESEARCH LIBRARY
CIRCULATION SECTION
4500N ROOM 175
LIBRARY LOAN COPY
DO NOT TRANSFER TO ANOTHER PERSON
If you wish someone else to have this report, return it to the library.

OPERATED BY
MARTIN MARIETTA ENERGY SYSTEMS, INC.
FOR THE UNITED STATES
DEPARTMENT OF ENERGY

Printed in the United States of America. Available from
National Technical Information Service
U.S. Department of Commerce
5285 Port Royal Road, Springfield, Virginia 22161
NTIS price codes—Printed Copy: A03 Microfiche A01

This report was prepared as an account of work sponsored by an agency of the United States Government. Neither the United States Government nor any agency thereof, nor any of their employees, makes any warranty, express or implied, or assumes any legal liability or responsibility for the accuracy, completeness, or usefulness of any information, apparatus, product, or process disclosed, or represents that its use would not infringe privately owned rights. Reference herein to any specific commercial product, process, or service by trade name, trademark, manufacturer, or otherwise, does not necessarily constitute or imply its endorsement, recommendation, or favoring by the United States Government or any agency thereof. The views and opinions of authors expressed herein do not necessarily state or reflect those of the United States Government or any agency thereof.

UNCLASSIFIED

SECURITY CLASSIFICATION OF THIS PAGE (When Data Entered)

REPORT DOCUMENTATION PAGE

READ INSTRUCTIONS BEFORE COMPLETING FORM

1. REPORT NUMBER

2. GOVT ACCESSION NO.

3. RECIPIENT'S CATALOG NUMBER

4. TITLE (and Subtitle) Chemical Characterization and Toxicological Evaluation of Airborne Mixtures: A System for the Continuous Generation of Phosphorous Aerosols from Red Phosphorus-Butyl Rubber

5. TYPE OF REPORT & PERIOD COVERED
Final Report
1982-1984

6. PERFORMING ORG. REPORT NUMBER

7. AUTHOR(s)
R. W. Holmberg
J. H. Moneyhun
T. M. Gayle

8. CONTRACT OR GRANT NUMBER(s)
Army Project Orders
9600, 0027, 1807, 2802

9. PERFORMING ORGANIZATION NAME AND ADDRESS
Oak Ridge National Laboratory
P. O. Box X
Oak Ridge, Tennessee 37831

10. PROGRAM ELEMENT, PROJECT, TASK AREA & WORK UNIT NUMBERS

11. CONTROLLING OFFICE NAME AND ADDRESS
U.S. Army Medical Research and Development Command
Fort Detrick, Frederick, Maryland 21701-5010

12. REPORT DATE
May 1984

13. NUMBER OF PAGES
40

14. MONITORING AGENCY NAME & ADDRESS (if different from Controlling Office)
U.S. Army Medical Bioengineering Research and Development Laboratory
Fort Detrick, Frederick, Maryland 21701-5010

15. SECURITY CLASS. (of this report)
Unclassified

15a. DECLASSIFICATION/DOWNGRADING SCHEDULE

16. DISTRIBUTION STATEMENT (of this Report)
Approved for public release; distribution unlimited.

17. DISTRIBUTION STATEMENT (of the abstract entered in Block 20, if different from Report)

18. SUPPLEMENTARY NOTES

19. KEY WORDS (Continue on reverse side if necessary and identify by block number)

Red Phosphorus-Butyl Rubber
Aerosol
Obscurants
Inhalation Toxicology
Smoke
Phosphoric acid
Aerosol Generation

20. ABSTRACT (Continue on reverse side if necessary and identify by block number)

A system for the continuous generation of phosphoric acid aerosols from burning Red Phosphorus-Butyl Rubber (RPBR) is described. The system is primarily intended for inhalation toxicology experiments using high aerosol concentrations (ca. 0.3 to 3 g/m^3), but is adaptable to other studies where a time independent concentration of the aerosol is desired in a flowing system. The RPBR formulation is softened by addition of hexane and extruded at a controlled rate at high pressur

OAK RIDGE NATIONAL LABORATORY LIBRARY
3 4456 0044447 3

DD FORM 1 JAN 73 1473 EDITION OF 1 NOV 65 IS OBSOLETE

UNCLASSIFI

SECURITY CLASSIFICATION

20. (Cont'd)

A precision hydraulic extrusion system using a micrometer adjustable high pressure hydraulic pump has been developed to control the extrusion rate. The emerging filament is ignited and burned in a flowing air stream for delivery to chambers. In addition to the extrusion-combustion system for aerosol generation, devices for recovering the spent aerosol and for monitoring its concentration are described.

AD _____
ORNL/TM-9649

Chemical Characterization and Toxicological
Evaluation of Airborne Mixtures

A SYSTEM FOR THE CONTINUOUS GENERATION OF PHOSPHOROUS AEROSOLS FROM RED PHOSPHORUS-BUTYL RUBBER

TASK SUMMARY REPORT

PREPARED BY

R. W. Holmberg
J. H. Moneyhun
T. M. Gayle

Bio/Organic Analysis Section
Analytical Chemistry Division
Oak Ridge National Laboratory
Oak Ridge, Tennessee 37830

Date Published - June 1985

Supported by

U.S. ARMY MEDICAL RESEARCH AND DEVELOPMENT COMMAND
Fort Detrick, Frederick, MD 21701-5012
Army Project Order Nos. 9600, 0027, 1807, and 2802

Project Officer: James C. Eaton

OAK RIDGE NATIONAL LABORATORY
Oak Ridge, Tennessee 37830
operated by
Martin Marietta Energy Systems, Inc.
for the
U. S. DEPARTMENT OF ENERGY
Under Contract No. DE-AC05-84OR21400

PREFACE

The use of trade names in this report does not constitute an official endorsement or approval of such commercial hardware or software. This report may not be cited for purposes of advertisement.

TABLE OF CONTENTS

	Page
PREFACE	1
LIST OF FIGURES	4
INTRODUCTION	5
DESIGN AND CONSTRUCTION OF EXTRUSION-COMBUSTION GENERATOR	6
MONITORING AND CONTROL	13
PREPARATION AND HANDLING OF RPBR	15
OPERATION OF GENERATOR	17
APPENDIX	21
LITERATURE CITED	33
PERSONNEL	33
PUBLICATIONS	33
DISTRIBUTION LIST	35

LIST OF FIGURES

		Page
1.	Schematic Diagram of Extrusion-Combustion Generator	7
2.	Photograph of Assembled Extrusion-Combustion Generator . .	8
3.	Photograph of Assembled Extrusion-Combustion Generator . .	9
4.	Photograph of Extrusion-Combustion Generator Showing Interface to Test Chamber	10
5.	Cut-away Drawing of Extrusion Assembly	11
6.	Circuit Diagram of Flame-out Detector	14
7.	Particle Sensor Response to Phosphorous Aerosol Generated from RPBR Extrusion-Combustion Generator .	19
A1.	Extrusion Head Details	22
A2.	Burn Tip and Ring Spacers	23
A3.	Extrusion Cylinder and Piston	24
A4.	Extrusion Head Restraint Assembly	25
A5.	Generator System Front and Center Support Plates	26
A6.	Generator System Rear Support Plate and Connecting Rod . .	27
A7.	Glass Pipe Burn Chamber	28
A8.	RPBR Storage Nipple	29
A9.	RPBR Loading Adapter	30
A10.	Extruder and Coupling for Loading RPBR	31
A11.	Coupling from Hydraulic Piston to Extrusion Piston	32

INTRODUCTION

It is often desirable to duplicate military obscurant smokes in the laboratory; producing them at known and uniform concentrations for extended periods of time so that their properties may be studied under controlled conditions. In support of the toxicology program of the U.S. Army Medical Research and Development Command, we describe an extrusion-combustion generator for the production of phosphoric acid aerosols from a red phosphorus-butyl rubber formulation (RPBR) such as is deployed in an L8A1 smoke grenade.

In field use, large quantities of the RPBR are deployed explosively over a wide area. For example, a single L8A1 grenade contains about 400 g of RPBR. The phosphorus rapidly burns to form phosphorus pentoxide which immediately reacts with water vapor in the air to form fine aerosol particles of phosphoric acids. In contrast, in laboratory generation for small chambers, only extremely small quantities of phosphorus are needed. Only 0.16 g of phosphorus are consumed per minute to produce an aerosol of concentration 1 g/m^3 in an air stream flowing at 500 L/min. It is difficult and labor intensive at best to accurately control the production of aerosols by batchwise burning of small fragments. Each small fragment burns rapidly at first, then subsides yielding aerosol concentrations that are far from uniform. Additionally, the direct combustion of fragments in a chamber is usually not acceptable for toxicology studies. Long exposures, e.g., four hours or more, may be necessary and during this time significant changes in the physical and chemical properties of the aerosols can occur. Animal produced contaminants also affect the atmosphere so that a freshly replenished atmosphere is generally required.

The generation system described here has been specifically designed for long exposure toxicology studies in inhalation chambers with aerosol concentrations ranging from ca. 0.25 to 5 g/m^3, but can also be used for other applications where a continuous supply of freshly formed aerosol is desired at a known and uniform concentration. The generator design is based on the property of RPBR, that when suitably softened it can be extruded through a small orifice at high pressures. The filament produced is ignited and burns in a flowing air stream which carries the aerosol into the chamber for study. Uniform aerosol production is managed by controlling the rate of extrusion (the rate at which the filament emerges and burns) and by the air flow rate.

The RPBR used in this work was an experimental batch containing nominally 5% butyl rubber and 95% red phosphorus produced by the U.S. Army Chemical Research and Development Center, Aberdeen Proving Ground, MD. Composition details as well as a detailed discussion of the chemistry of the smoke are contained in the report "Chemical and Physical Characterization of Phosphorous Smokes" (1). As will be discussed in detail later, we found that hexane, when incorporated into the material, softened it sufficiently so that it could be extruded at high pressures. Typically, seven to eight percent hexane was used. With this addition of hydrocarbon softening agent, the material could be hydraulically extruded at a controlled and constant rate and

continuously burned to form the aerosol of phosphoric acid. Chemical studies (1) have shown that the incorporation of hexane has little effect on the properties of the aerosol. The hexane is essentially completely burned with only small traces being found in the exposure atmosphere.

The generation and monitoring system described here has been used successfully in extended operation. Five generators have been supplied to the Illinois Institute of Technology Research Institute for inhalation toxicology studies and have been in use for approximately two years. Additionally, ORNL/Gayle light scattering particle concentration monitors, with read-out electronics to detect and alert the operators should abnormally high or low aerosol concentrations develop, have been supplied. Flame-out detectors to alert the operators should the phosphorus flame fail during an exposure have also been developed and supplied. Aerosol concentrations ranging from 0.2 to 3 mg/L have been studied in chambers at air flow rates of 500 L/min.

DESIGN AND CONSTRUCTION OF GENERATOR SYSTEM

The Red Phosphorus-Butyl Rubber aerosol generating system consists of an extrusion device delivering a cylindrical filament of softened RPBR into a burn chamber where the material is burned in a flowing air stream forming the phosphoric acid aerosol. For control, the hydraulic fluid is pumped with a precision high pressure metering pump. Appropriate monitoring and controlling systems have been incorporated.

A schematic diagram of the extrusion-combustion generator is shown as Figure 1. Photographs of an assembled prototype are shown as Figures 2-4. A cut-away drawing of the extrusion assembly is shown as Figure 5. Detailed construction drawings of the various components of the system are contained in the appendix as Figures A1 to A11. In general, commercially available parts were used for the hydraulic system. These are detailed in the list of parts included in the appendix.

The extrusion cylinder (Figure 5) was fabricated from type 304L stainless steel and is 0.5-inches i.d., 1-inch o.d., and 8-inches long. It can contain a billet of RPBR of approximately 40 g. The piston is fabricated of carbon steel machined to fit the cylinder. Early pistons were constructed of 304L stainless steel. Their use was abandoned because of the tendency of similar materials to gall and freeze together. Although some galling has been observed with carbon steel pistons, their performance has been more satisfactory. The cylinder has been designed to simply connect to the extrusion head so that the assembly can be easily broken down for cleaning and reloading.

Details of the extrusion head are shown in Figures 5 and A1. It contains a 0.0938 inches diameter orifice which defines the diameter of the RPBR filament. Immediately after this orifice, the internal diameter of the burn tip is expanded to 0.125 inches. The RPBR

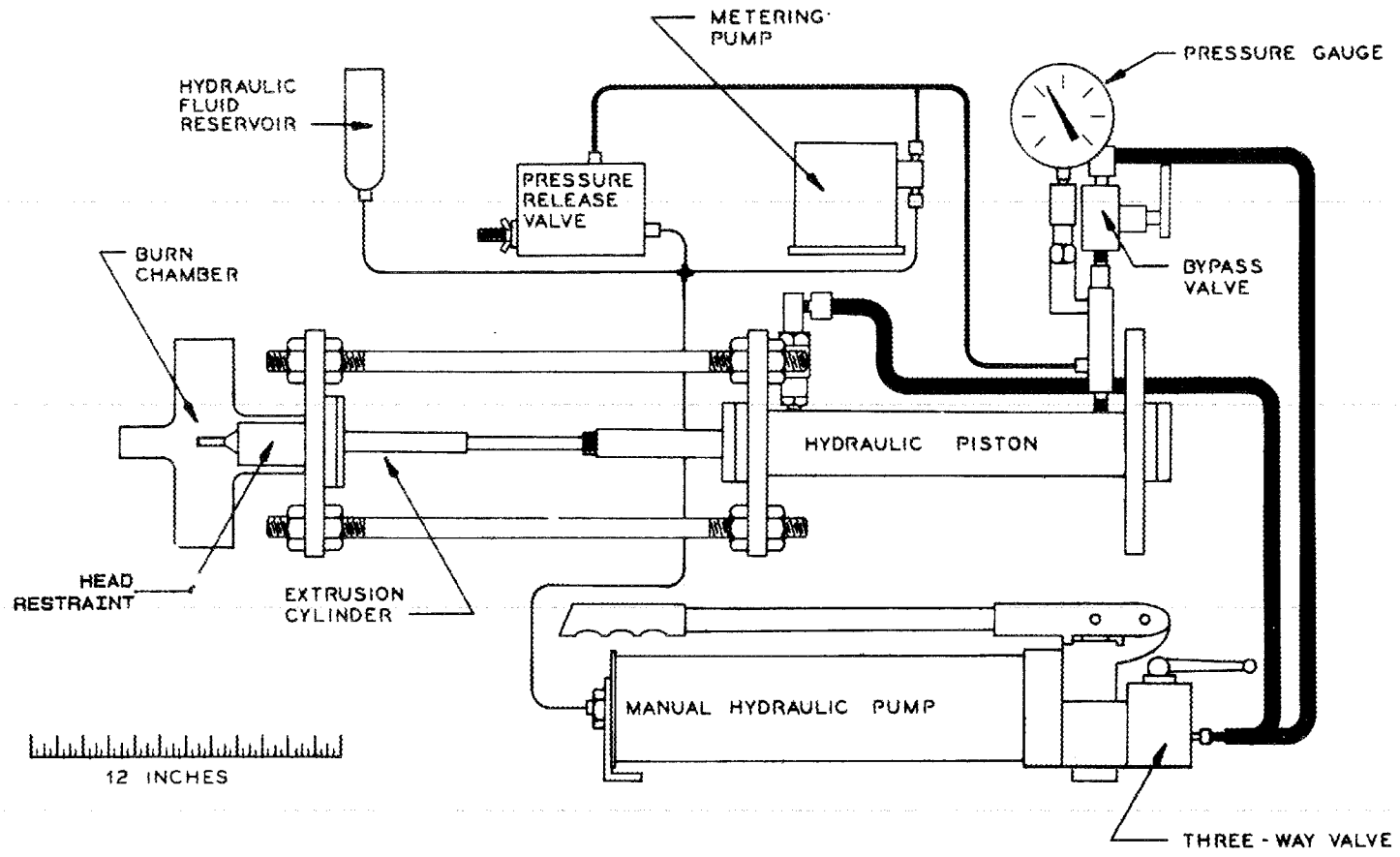

Figure 1. Schematic Diagram of Extrusion-Combustion Generator

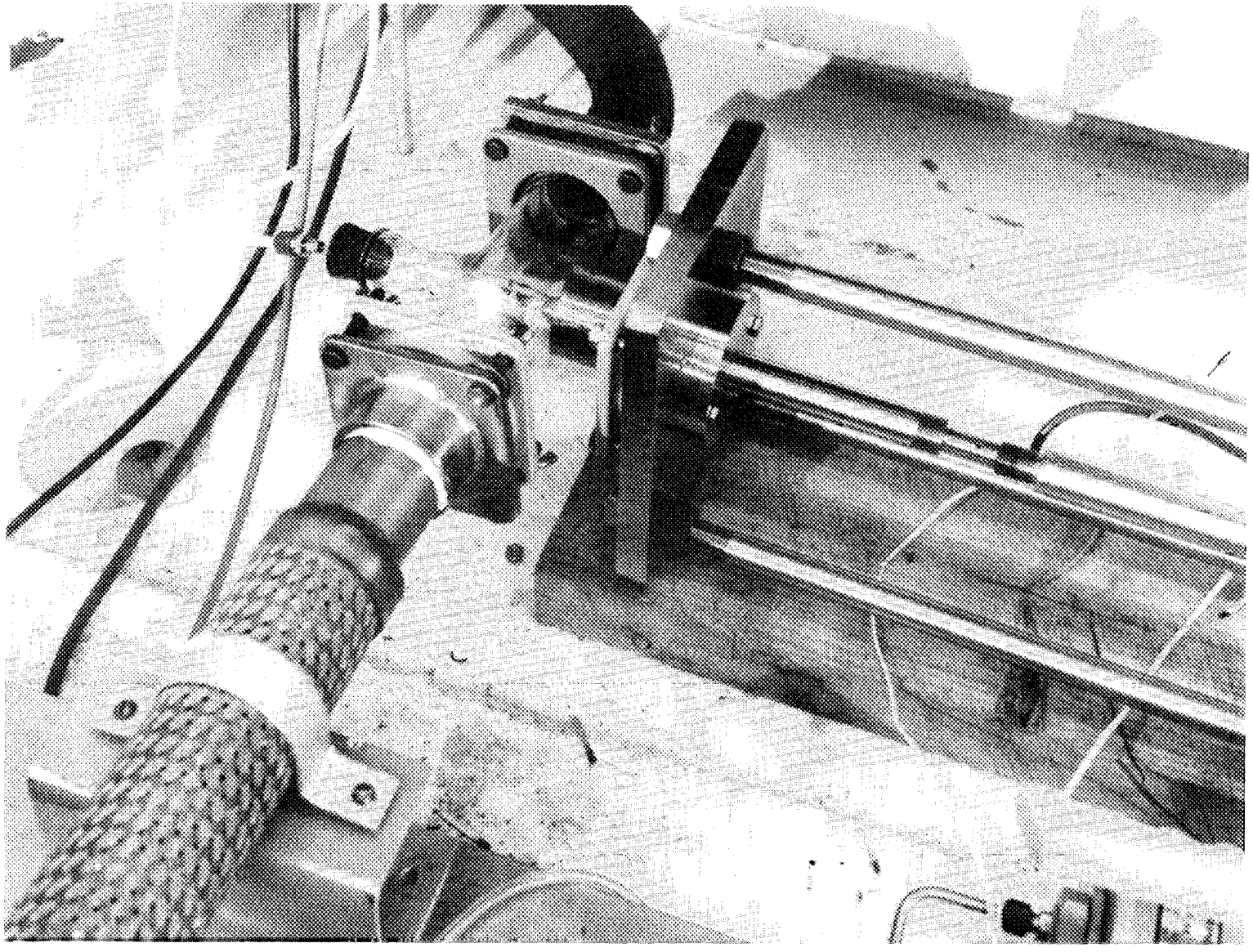

Figure 2. Photograph of Assembled Extrusion-Combustion Generator

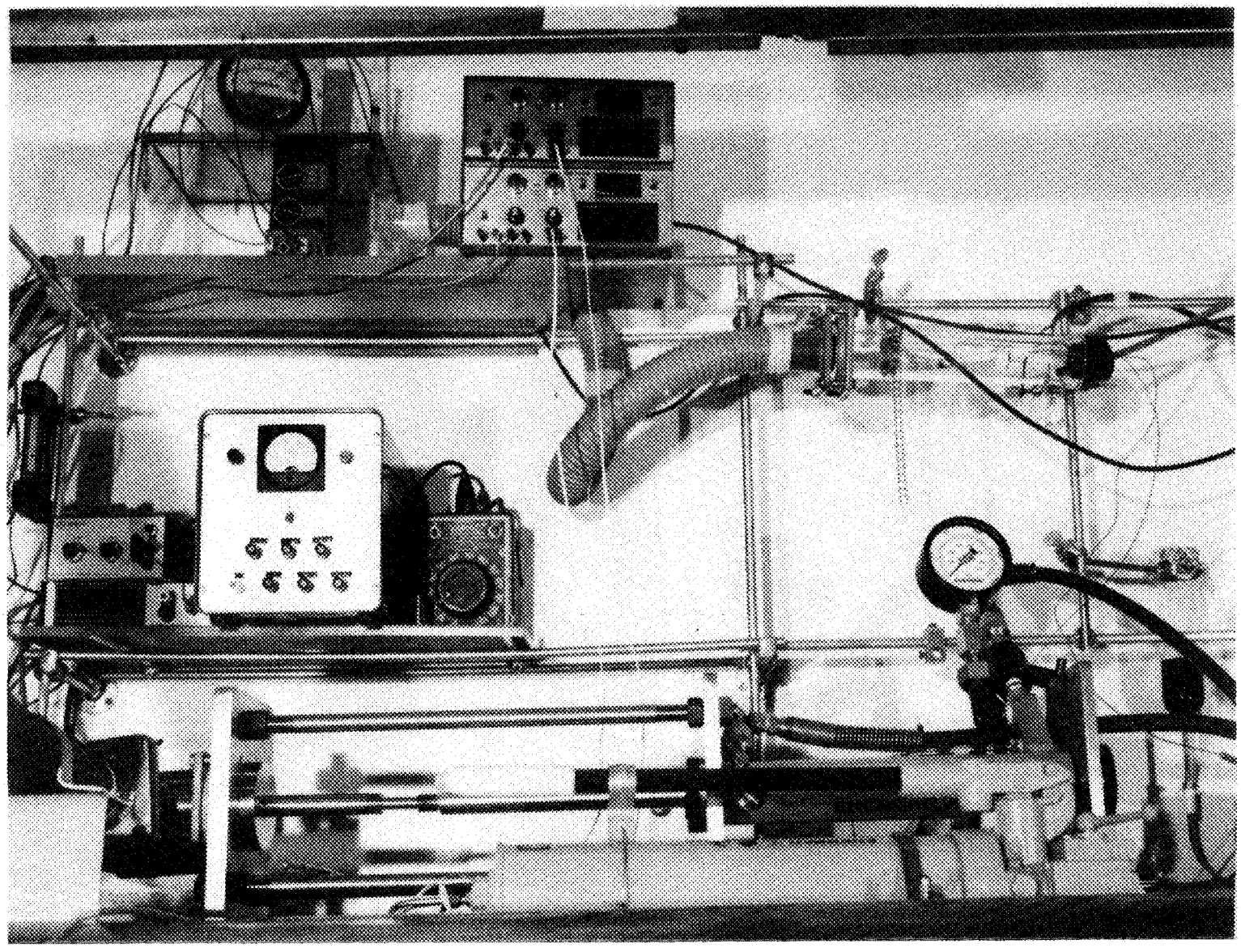

Figure 3. Photograph of Assembled Extrusion-Combustion Generator

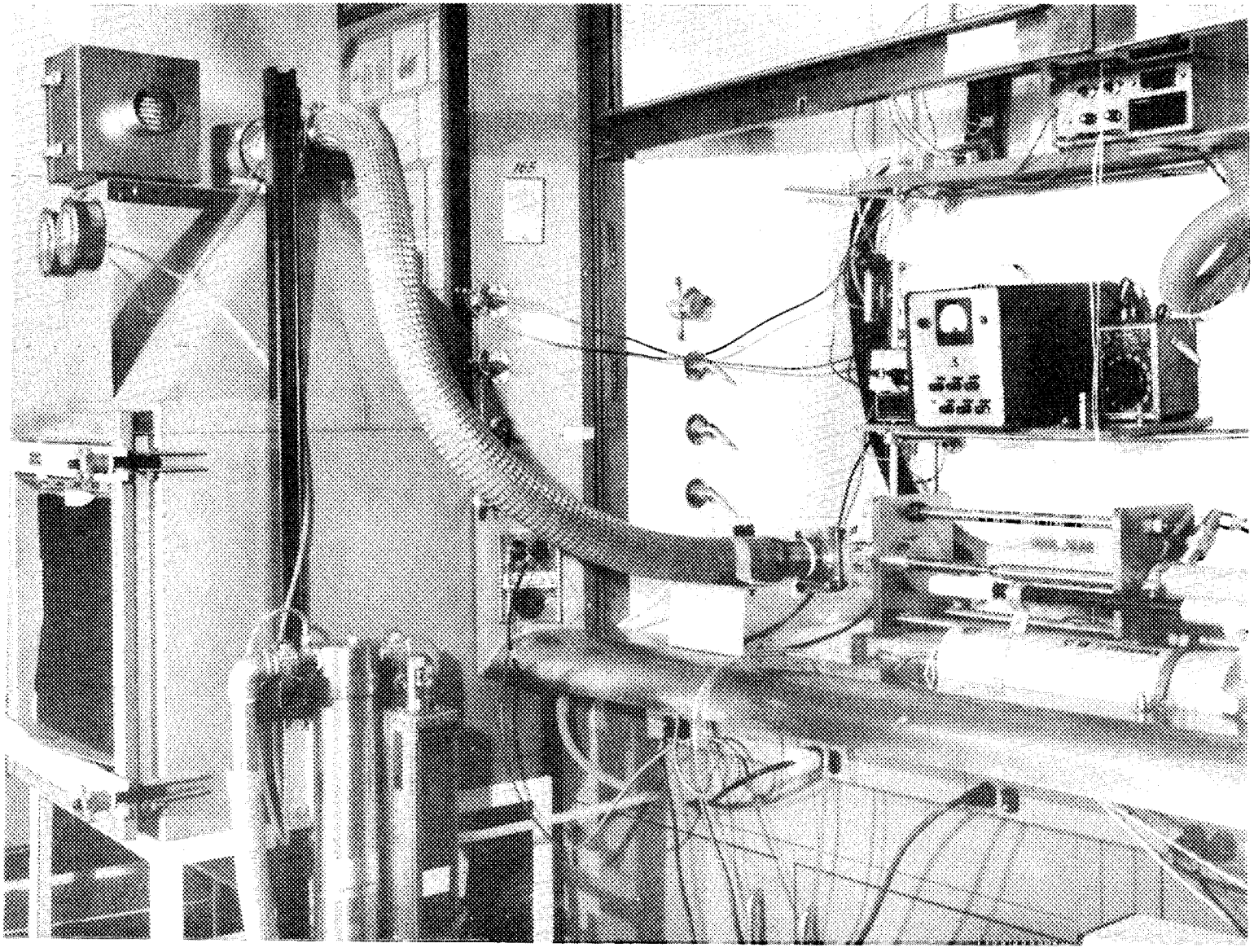

Figure 4. Photograph of Extrusion-Combustion Generator Showing Interface to Test Chamber

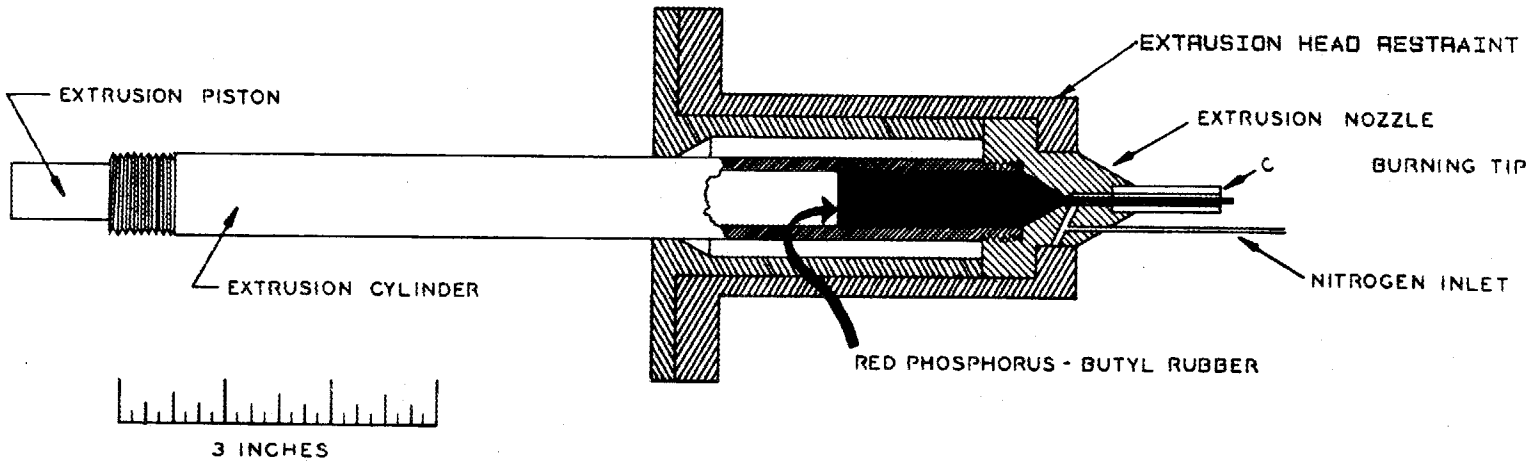

Figure 5. Cut-away Drawing of Extrusion Assembly

filament expands slightly after leaving the orifice. The 0.125 inches provides for this expansion and is sufficiently large so that there is an annulus where the RPBR can be enclosed in a slowly flowing stream of nitrogen gas. This inert gas surrounds the filament until it exits into the combustion region. With this sheath of nitrogen, combustion cannot occur back into the extrusion channel and the uniformity of combustion is improved. Without the nitrogen flow, the extruding filament tends to burn into the burn tip and expands, plugging the tip. This causes eratic extrusion and consequently eratic burns. The burn tip is constructed of stainless steel. A ceramic tip was also tested. It was hoped that, because of the lower heat conductivity of the ceramic, lower extrusion-combustion rates could be maintained. The benefits derived from the ceramic tip were slight and did not offset the difficulty of fabrication.

The burn chamber is fabricated from a standard 2-inch glass pipe tee (Figure A7). One leg of the tee fits over the extrusion head and seals against the support plate. Air enters one leg and aerosol laden air exits to the exposure chamber through the opposite leg. A one-inch diameter leg has been blown into the tee directly opposite the burn tip. This added leg serves as access for a nitrogen gas line and for ignition of the RPBR. A two-inch leg for cleanout purposes has also been added to the underside of the tee at right angles to the other four legs. This leg is sealed during generation of the aerosol.

The RPBR is ignited by using a small electrically heated coil. The coil is fabricated from Nichrome wire and is mounted in a protective quartz sheath. It is powered by a 9-V transformer. As the RPBR begins to emerge from the extruder the hot tip is pressed against it until it ignites. It is then withdrawn for the rest of the run. The burn chamber was designed to give assess for the lighting procedure via the one-inch leg, but in practice, at IITRI, it was found to be easier to remove the inlet air line and manually insert the lighter through that port of the burn chamber, replacing the inlet line after ignition.

The extrusion is powered by a commercial double action hydraulic cylinder having a 2-inch diameter piston and a 10-inch stroke. Valving is provided to drive the piston in either direction: forward for extrusion and reverse for loading and disassembly. A two speed hand operated pump provides quick piston movement during loading and unloading. During aerosol generation, the hand pump is bypassed and the hydraulic fluid is accurately metered into the hydraulic cylinder using a high pressure metering pump. It is necessary to exclude air from the hydraulic system so that the extrusion of the RPBR filament is directly related to the fluid pumping rate without lag due to air compressibility. The geometry of the extrusion cylinder is such that the flow of one mL of hydraulic fluid causes 2 cm of RPBR filament to extrude.

A pressure gauge and pressure relief valve are also included in the system. Although the extrusion of the RPBR normally proceeds at modest and nearly constant pressures, occasionally pressure excursions caused by plugging of the extrusion orifice due to inhomogenieties in the softened RPBR (hard spots) do occur. The pressure relief valve bypasses the hydraulic flow and prevents system damaging pressure

excursions. The hand pump assembly contains a reservoir for hydraulic fluid. In development work, a second reservoir shown in Figure 1 was used. This was not included in later models.

The generator is connected to an exposure chamber with flexible hose. At IITRI, plastic hose performed satisfactorily. The hose shown in Figure 4 was flexible stainless steel tubing used to minimize the addition of organic impurities to the atmosphere. It was used primarily for development and chemical sampling to determine the chemical composition of the exposure atmosphere (1).

The aerosol produced from burning phosphorus is a concentrated aqueous solution of phosphoric acids. The aerosol is extremely irritating and corrosive, and when produced in the quantities necessary for inhalation toxicology experiments, can not be disposed of safely by venting into typical house exhaust systems. We have found that glass fiber coalescing filters such as were used to remove spent petroleum based aerosols (2) were also very satisfactory for cleanup of these phosphoric acid aerosols. A seven filter unit obtained from Balston Filter Products, Inc., using DX grade filters removed over 99% of the aerosol exiting from our test chamber. The unit operated at 500 L/min with a pressure drop of 50 cm of water even when saturated with aerosol. No deterioration of the filter occured after long contact with the acid. The housing of the filter unit was stainless steel and did not appreciably corrode. The unit was equipped with a continuous drain to remove the acid collected and required no maintenance in normal use.

MONITORING AND CONTROL

Flame-out of the extruding RPBR may occur particularly at very low extrusion rates (corresponding to concentrations below 0.25 g/m^3 at air flow rates of 500 L/min). Evidently the RPBR is cooled below its combustion temperature by the incoming air stream. When flame-out occurs, aerosol production ceases, the concentration in the chamber rapidly drops, and a particular exposure cycle is jeopardized. If flame-out can be detected early enough, the RPBR can be quickly reignited so that only a minor change in concentration occurs and the exposure run is not appreciable compromised. Light scattering concentration monitors in the chamber will, of course, detect this concentration excursion, but the transport time from combustion point to monitor position is approximately one minute. During this time approximately one-half of the chamber volume is filled with aerosol-free air. A unit was developed to instantly detect such flame-outs and to alert the exposure chamber operator when they occur. The unit consists of a phototransistor and a remote amplifier/relay with audible and visual alarms. The phototransistor is attached to the outside of the glass pipe burn chamber and monitors the intense radiation from the flame. The amplifier/alarm chassis is connected to the phototransistor by a length of small two-conductor cable. A circuit diagram of the device is shown as Figure 6. A 2N5780 phototransistor was used. As the

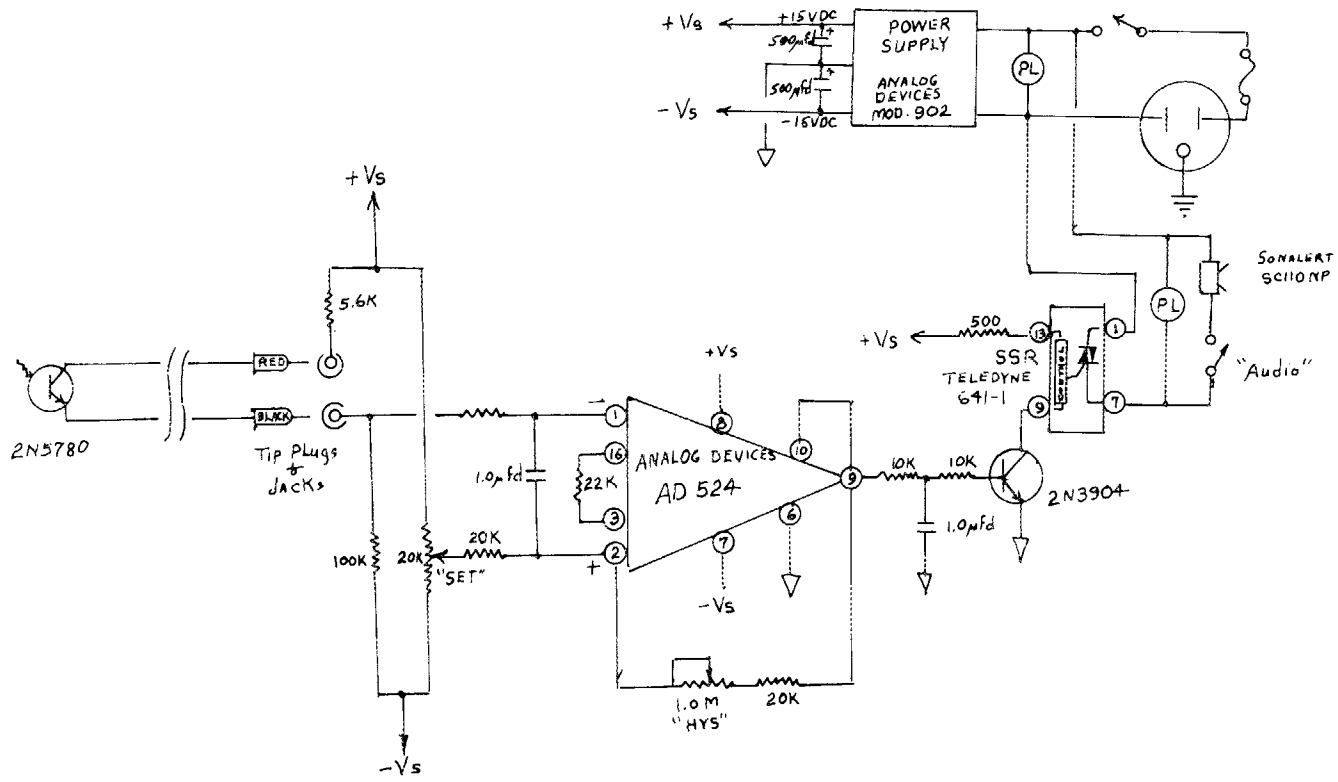

Figure 6. Circuit Diagram of Flame-out Detector

flame goes out, the phototransistor causes a negative signal to feed the negative input of the differential amplifier (Analog Devices AD 524) which increases the voltage output to drive a 2N3904 current amplifier. The current amplifier activates a solid state relay (Teledyne 641-1) which actuates the audible alarm (Mallory Sonalert SC110NP) and lamp. A switch is provided to silence the audible alarm if only the visible alarm is desired. The alarm trip point is set by a potentiometer on the positive input of the diffential amplifier. The circuit is designed to provide, via this trip point adjustment, compensation for a number of variables including ambient light levels and variations in photosensor mounting. The unit also incorporates a potentiometer adjustment for positive feedback around the amplifier to provide switching hysteresis. This feature is useful in preventing rapid on-off switching at the set point should the flame flicker but not extinguish.

An adaptation of the ORNL/Gayle light scattering aerosol concentration monitor that was used to monitor military petroleum-based aerosols was used to monitor the RPBR combustion aerosols. Detailed circuitry and operating instructions have been published earlier (2) and will not be repeated here. Briefly, the system consists of a small sensing device composed of a light emitting diode integrally mounted beside, but optically isolated from, a phototransistor. Near infrared light from the photodiode is scattered from nearby aerosol particles and detected by the phototransistor. In practice the device has proved reliable and almost linear in response for a wide variety of concentrated aerosols. It should be stressed that the sensor must be calibrated for each aerosol type. For this work, calibrations are made by comparing the response of the sensor to gravimetric pad samples. The monitor's electronic chassis is equipped to amplify and filter the signal from the photosensor to drive a chart recorder or other data handling device. Additionally, they are equipped with high and low signal alarms to alert the operator should the signal fall outside a preset average concentration.

PREPARATION AND HANDLING OF RPBR

The red phosphorus-butyl rubber formulation used in these experiments was nominally 95% red phosphorus and 5% butyl rubber. Batches of this material were prepared at U.S. Army Chemical Research and Development Center, Aberdeen Proving Ground, MD. As received, it consisted of 1/4-inch diameter pellets, but also contained many fines. As received the material is somewhat soft, but cannot be extruded. We have found that hydrocarbon vapors such as hexane are absorbed by the material, and after incorporation of seven to eight percent of hexane into the RPBR, it becomes extrudable at modest pressures. The particular hexane concentration needed to insure extrudability was determined empirically. In early work on the development of the extrusion process, a batch of RPBR was used that extruded well with the incorporation of only 4% hexane. Later, a much larger batch, sufficient for the duration of an extended toxicology investigation, was obtained and

completely failed to extrude at 4% hexane content. This later batch required at least seven percent hexane for extrudability. Chemical analyses of the smokes (1) have shown that the hexane is almost completely burned during aerosol generation and do not appreciably alter the composition of the smoke.

To help insure chemical homogeniety for toxicology experiments, each can (containing approximately 2.5 kg of RPBR) was thoroughly mixed before softening and processing for extrusion. Direct softening of the material as received did not yield an extrudable product. Often, hard spots were present that would not extrude even at pressures above 2500 psi. Burns were very erratic. Thus, it was necessary to homogenize the material before softening. The RPBR was mulled with hexane solvent in an open metal beaker with a mechanical mixer. Finger-like stirring blades efficiently blended the material. Raw RPBR was added to the beaker in small increments and wetted with hexane until the entire can was being blended. Approximately 750 mL of hexane was used per can to form a blendable paste like mixture. It was mulled for 15 minutes and then transferred to a stainless steel pan where the hexane was allowed to completely evaporate. During the drying process the RPBR was chopped by hand into small pieces for use in subsequent steps in the process. After chopping, most of the hexane had evaporated. The coarse powder was transferred to a vacuum desicator and all of the hexane removed by vacuum evaporation. By carefully following the weights of the material through the process, we found that greater than 99.9% of the hexane was removed. This homogenized powder was returned to its original can for storage until final processing.

The homogenized RPBR was softened as required by exposure to hexane vapors. Sixty-gram portions were weighed into tared open bottles and placed in a vacuum desicator over excess hexane. To hasten the absorption of hexane, the desicator was evacuated to remove air. In this process, the hexane boiled, helping to expel the air. The desicator was then sealed and allowed to stand until the required amount of hexane had been incorporated into the RPBR. In the particular configuration used here, it was found that, with 12 bottles, 7 to 8 percent hexane would be absorbed in 24 hours. The amount of hexane incorporated was determined by weight change. Those bottles falling outside these limits were rejected and reprocessed later.

The softened RPBR was transferred to 3/4-inch stainless steel pipe nipples with end caps for storage and shipment. These nipples (Fig. A8) were 4.5-inches long, and were reamed to an internal diameter of 0.81-inch. Additionally, the end faces of the nipples were machined smooth to seal against Teflon inserts in the pipe caps. Typically, about 40 g of softened RPBR was loaded and compressed into each nipple. We have found that the sealed nipples will contain the RPBR for at least 3 months without losing hexane or hardening.

OPERATION OF GENERATOR

Setting up the generator for use is a relatively simple procedure that can be performed by an experienced operator in a few minutes time. It does require a number of discrete steps which are described here.

Screw the extrusion cylinder (Figs. 5 and A3) into the extrusion head (Figs. 5 and A1) and place it in the restraint assembly (Figs. 5 and A4), rotating the extrusion cylinder so as to position the 1/16-inch nitrogen inlet tube so that it will be away from the phosphorus flame. Then secure the restraint using two 1/4-inch bolts. Attach the nitrogen line to the nitrogen inlet tube and adjust the flow to approximately 100 mL/min.

Shortly before a run is to begin, the softened RPBR must be transferred to the extrusion cylinder. Remove the caps from the storage nipple and thread it to the loading adapter (Fig. A9). (The nipples are loaded at high pressures; one end is flush with RPBR, the other is void. Connect the flush end to the adapter.) Insert the loading piston (Fig. A10) in the rear of the extrusion cylinder. Using the hydraulic hand pump, slowly extrude the billet into the extrusion cylinder. Remove the loading adapter and nipple and remove enough (ca. .5 cm) of the RPBR from the rear of the extrusion cylinder to permit the insertion of the extrusion piston into the cylinder. This should be done carefully so as not to damage these closely fitting parts. Care must be taken to align the extrusion cylinder and extrusion piston to prevent binding or galling during the run. This is best done by pressing (hand pump) the piston slightly into the cylinder while aligning the piston by hand, and then removing the pressure. Repeat this process two or three times. When the piston is ca. 1 cm into the cylinder it will support itself in alignment. Now continue to slowly pressurize the system by hand to drive the extrusion piston forward. Observe the pressure guage. Pressures below 1,000 psi (occasionally to 1,500 psi) should be sufficient to drive the piston forward until the extruding filament emerges from the burn tip. As the RPBR emerges from the burn tip, the pressure drops to about 300 psi. Unless you are ready to start the burn, the pressure should again be dropped by rotating the four way valve at the front of the hand pump. This again corrects any misalignment in the extrusion cylinder and also stops the extrusion. This completes the initial set-up, and controlled extrusion and combustion can begin. Usually there results some excess RPBR filament which should be removed from the burn tip to prevent a high concentration flare-up on ignition.

At the start of the run, the hand pump is isolated using the bypass shutoff valve at the metering pump. Previous calibration of the pump permits approximate vernier setting to control the pump rate. The igniter should be turned on to permit a sufficient warmup period. As soon as the extrusion starts, touch the lighter to the extruding filament to ignite. (The hand pump may be used to bring up the extrusion pressure and avoid the delay of pressuring with the metering pump. Open the bypass valve slightly, pressurize the system by hand, and quickly close the bypass valve with the metering pump running.) The

igniter may be mounted in the one-inch access port of the burn chamber or may be inserted through the air inlet port. Allow the burn to continue for several minutes to permit aerosol equilibration in the chamber, and make adjustment to the metering pump to achieve the proper concentration as determined from the light scattering monitors. After adjusting to the proper rate, little or no adjustment will be required on future runs when generating at the same concentration and under the same conditions.

Usually, little operator attention is required after the run begins, particularly if flame-out detector and monitor alarms are set. With few exceptions, the concentration of the aerosol developed by the generator remains constant, deviating from the average by less than 10%, over the duration of the run (Fig. 7). Very occasionally, in spite of the pretreatment, there are occassional hard spots, and plugging occurs at the extrusion orifice. The hydraulic pressure rises and the rate of extrusion may become low enough for the flame to extinguish. More usually, a larger than normal concentration excursion in the chamber is seen before the plug clears. At air flow rates of 500 L/min, concentrations of phosphoric acid aerosol in the chamber from ca. 0.25 to 5 g/m^3 can be obtained, depending on the metering pump flow rate. At or below the lower limit, very little RPBR is being extruded (ca. 30 mg/min) and the flame tends to extinquish. At the upper limit, the RPBR extrudes faster than the flame will consume it. Unburned material accumulates in the bottom of the burn chamber, eventually igniting in an uncontrolled manner.

After a run is completed the system should be disassembled for cleaning. If the softened RPBR is permitted to dry in the system it is more difficult to clean. Withdrawal of the piston requires considerable force and must be done hydraulically. A coupling (Fig. A11) is provided to attach the piston to the hydraulic system. First back the hydraulic piston away from the extrusion piston and thread the adapter to the hydraulic piston. Advance the hydraulic piston aligning the hole in the adapter with that in the extrusion piston. Insert the pin through the holes and, using the hand pump in reverse drive, withdraw the extrusion piston. Disconnect the nitrogen line, remove the two bolts from the extrusion head restraint and withdraw the extrusion cylinder and head. Remove the extrusion head from the cylinder and, using a small spatula, remove residual RPBR from the components. A stick from a cotton swab may be used to clean the RPBR from the orifice without scratching the surface. The burn tip should be removed from the extrusion head and cleaned. Soaking the components in hot soapy water facilitates the easy removal of the film of RPBR from the surfaces. Scrubbing with a brush usually is sufficient.

Particularly difficult spots may be removed with acetone. After cleaning, the piston and cylinder should be tested for free clearance. This is an important point because nicks or inperfections can cause freezing of the two components. We have found it advantageous to lightly coat the piston head with a thin film of light weight oil for this test. For protection of the mating surfaces of the piston and cylinder and to lubricate and facilitate extrusion a light coating of one percent solution of butyl rubber dissolved in hexane is used. The

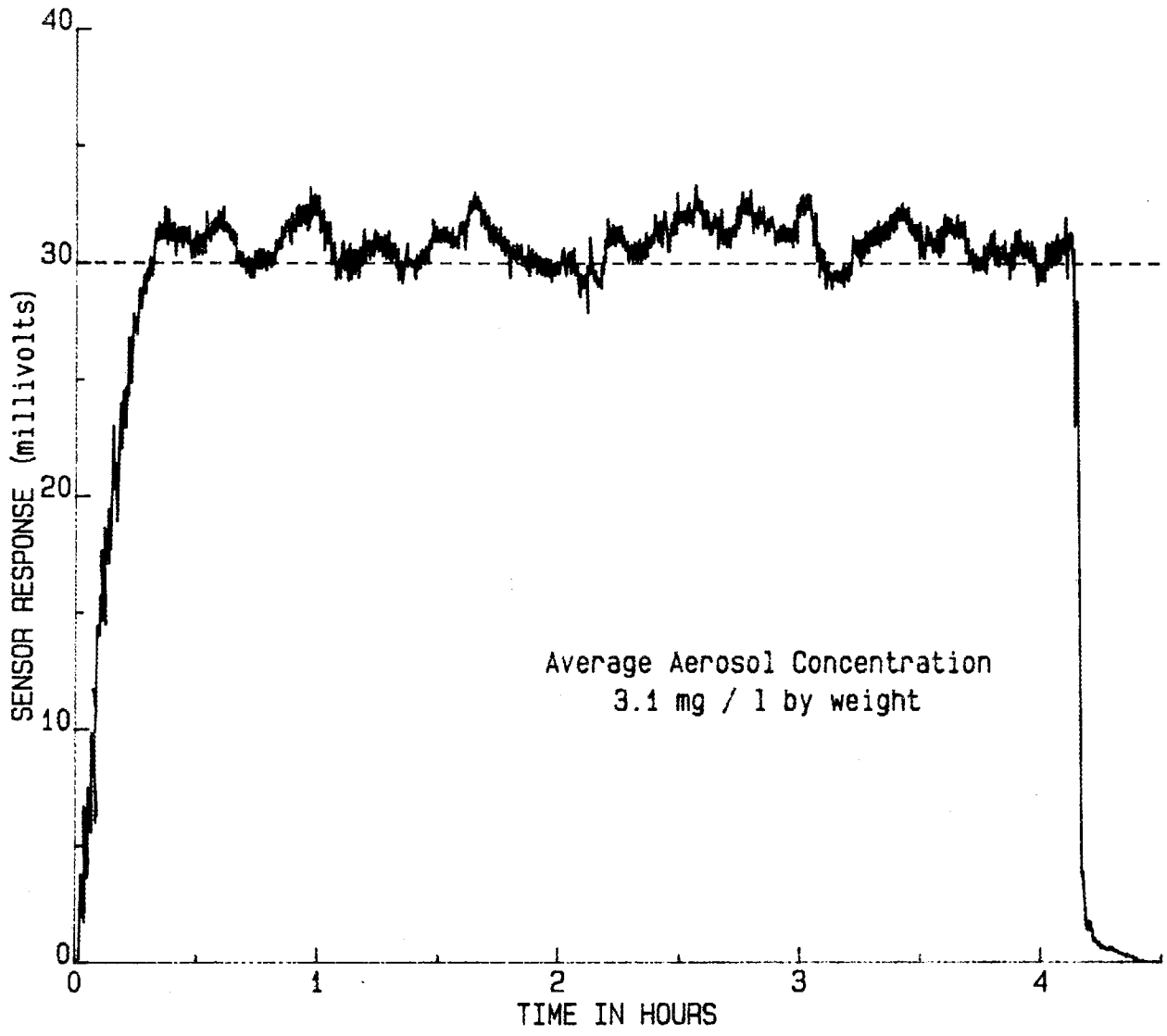

Figure 7. Particle Sensor Response to Phosphorous Aerosol Generated from RPBR Extrusion-Combustion Generator

surfaces of the cylinder and piston are wetted with this solution and the hexane is permitted to evaporate, leaving a thin film of butyl rubber on the surfaces. This effectively prevents contact and helps to prevent freezing of the piston in the cylinder.

APPENDIX

This appendix contains a list of components and a collection of detailed engineering drawings showing the construction and assembly of the components of the RPBR extrusion-combustion generator.

List of Components for Hydraulic System

Quantity	Mfg. and Cat. #	Description
1	Eldex* mdl.A 60 S	Metering pump
1	Enerpac** mdl GP-10S	Pressure gauge (0-10,000 psi)
1	Enerpac mdl.# RD-910	Hydraulic cylinder, double acting, solid plunger design, 9 ton capacity, 10 1/4 inch stroke.
2	Enerpac mdl.# AD-173	Retainer nut (for Rd-910 cylinder)
1	Enerpac mdl.# P-84	Hydraulic Hand Pump, 0-10,000 psi automatic 2 speed with a 4 way control valve.
1	Enerpac mdl.# V-152	Relief valve, adjustable pressure control, range 300 to 10,000 psi.
1	Enerpac mdl.# GA-2	Gauge adapter, Gauge port-1/2 in. NPT male end 3/8 in. NPT, female end 3/8 in. NPT
1	Enerpac mdl.# V-8	Valve, hydraulic, manual shut-off, 3/8 in. female NPT.

*Eldex Laboratories Inc., 3551 Haven Ave., Menlo Park, CA 94025

**Enerpack, Butler Wisconsin, 53007, Division of Applied Power Inc.

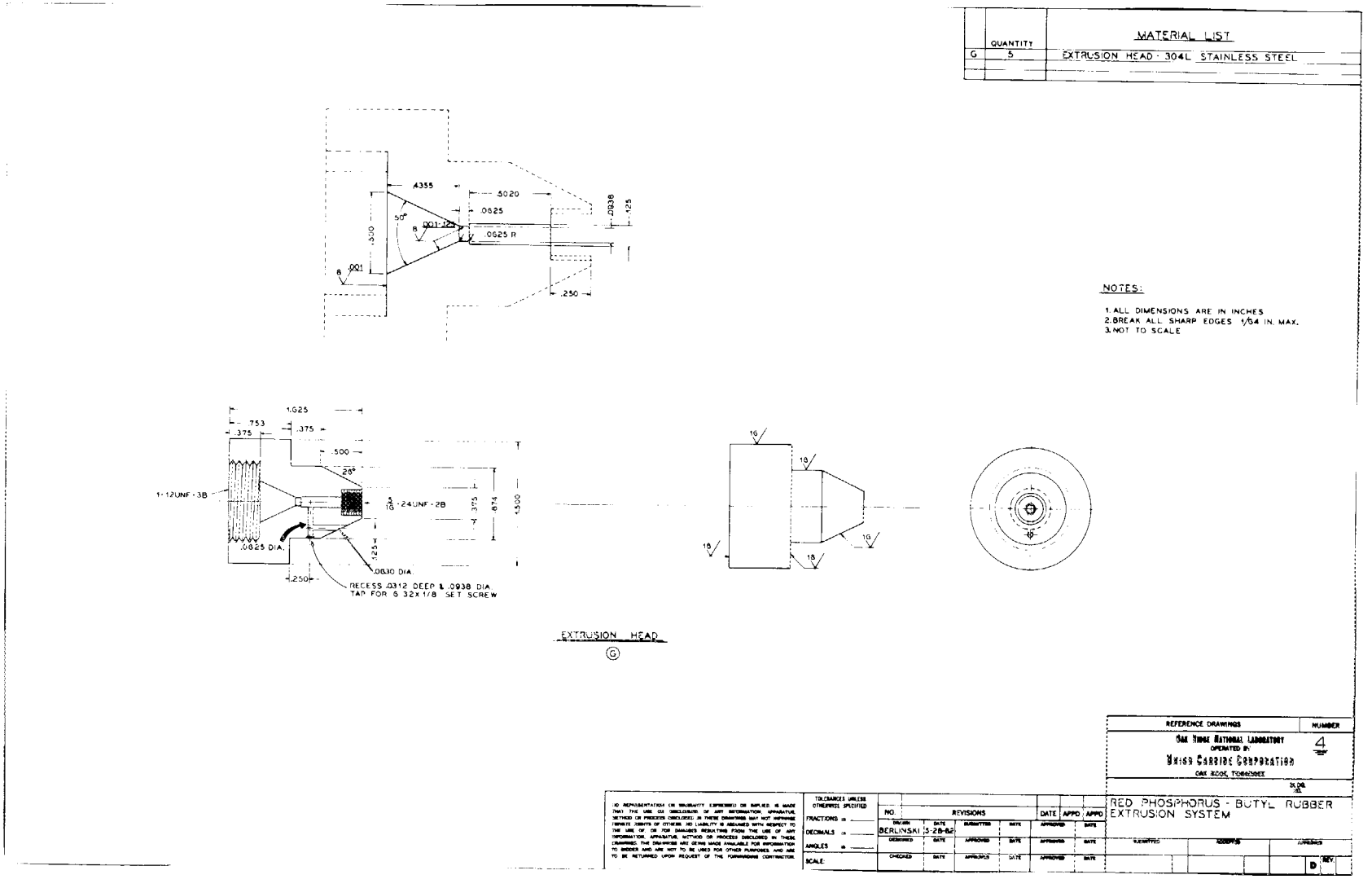

Figure A1. Extrusion Head Details

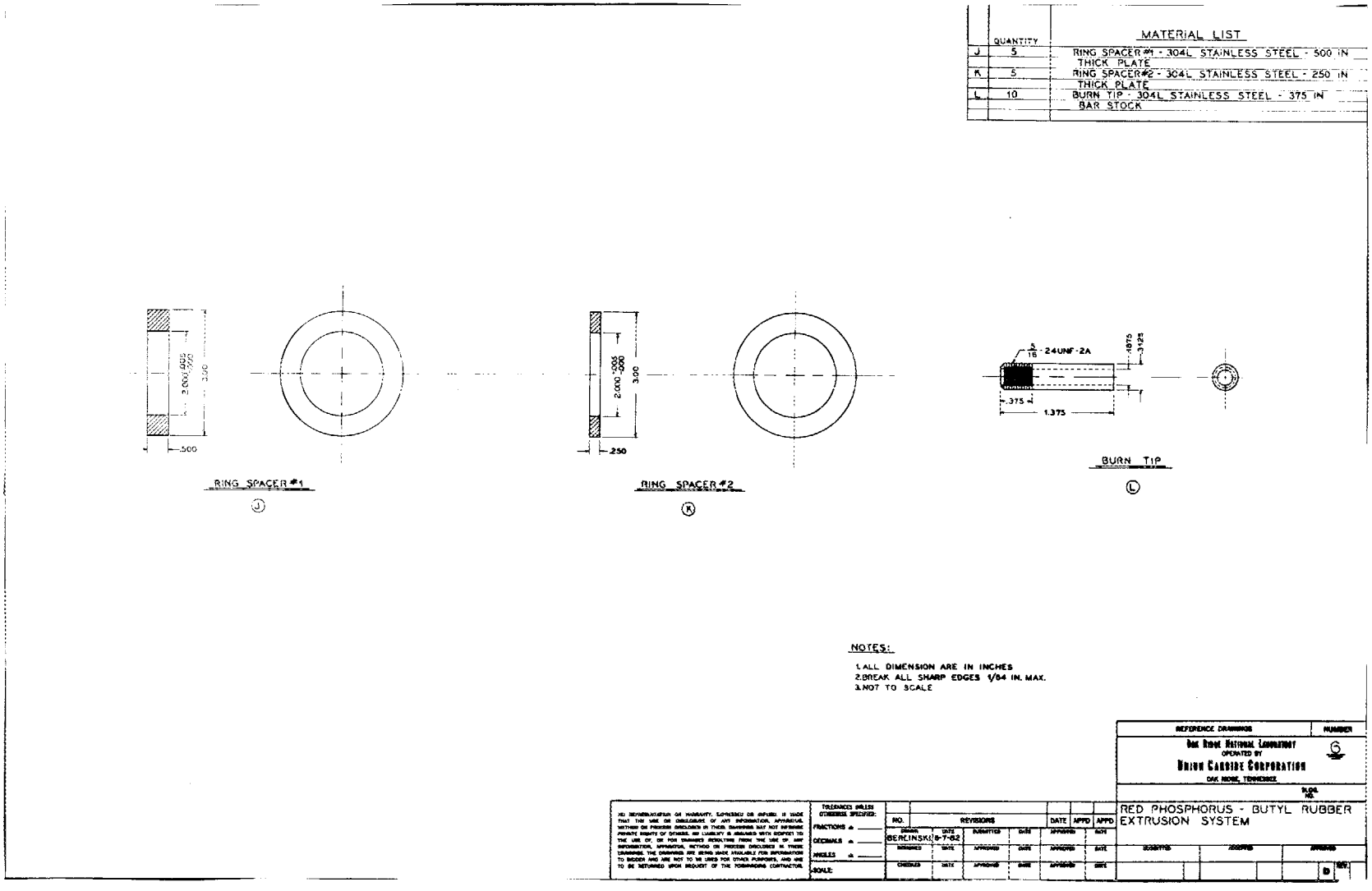

Figure A2. Burn Tip and Ring Spacers

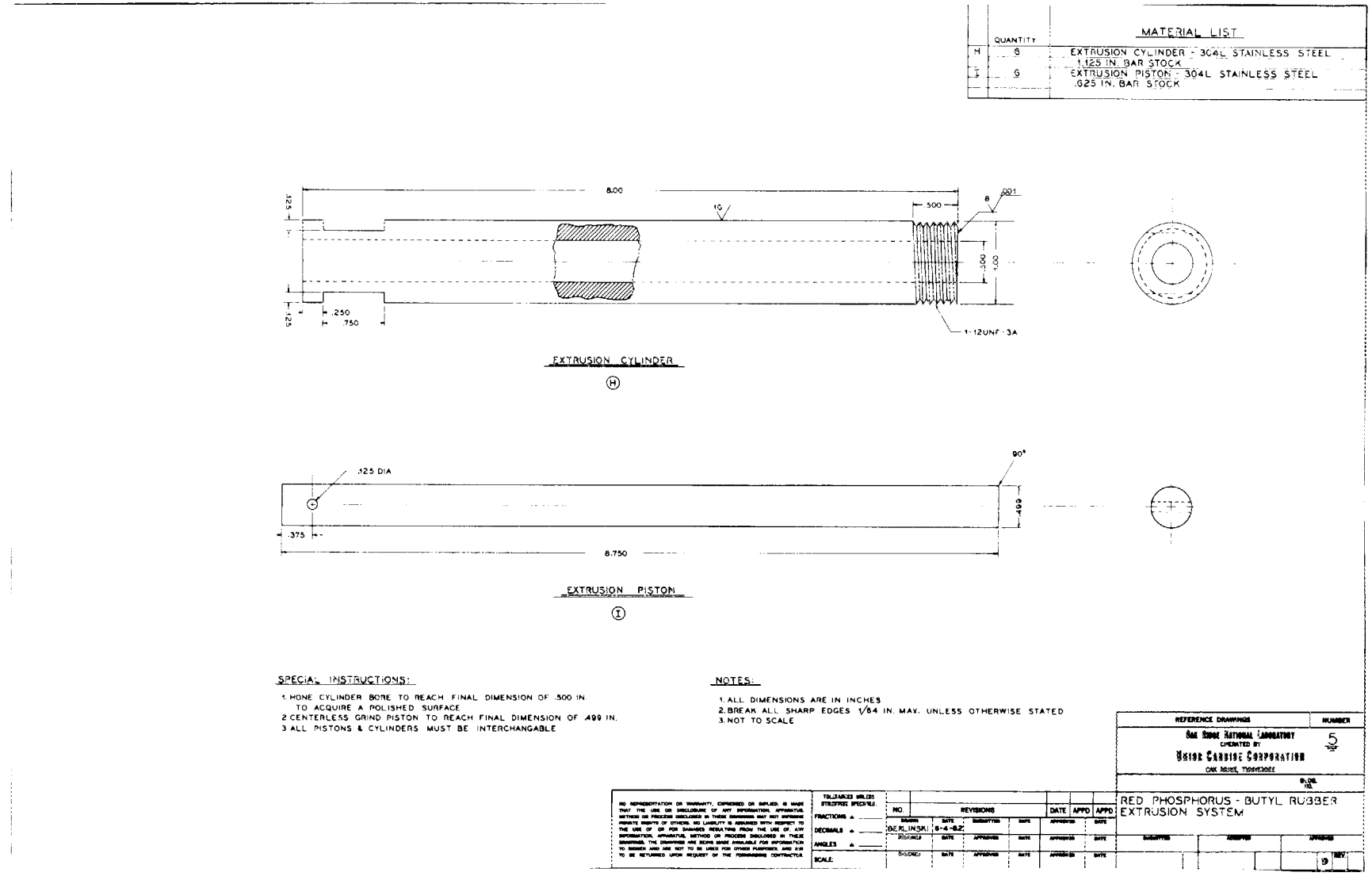

Figure A3. Extrusion Cylinder and Piston

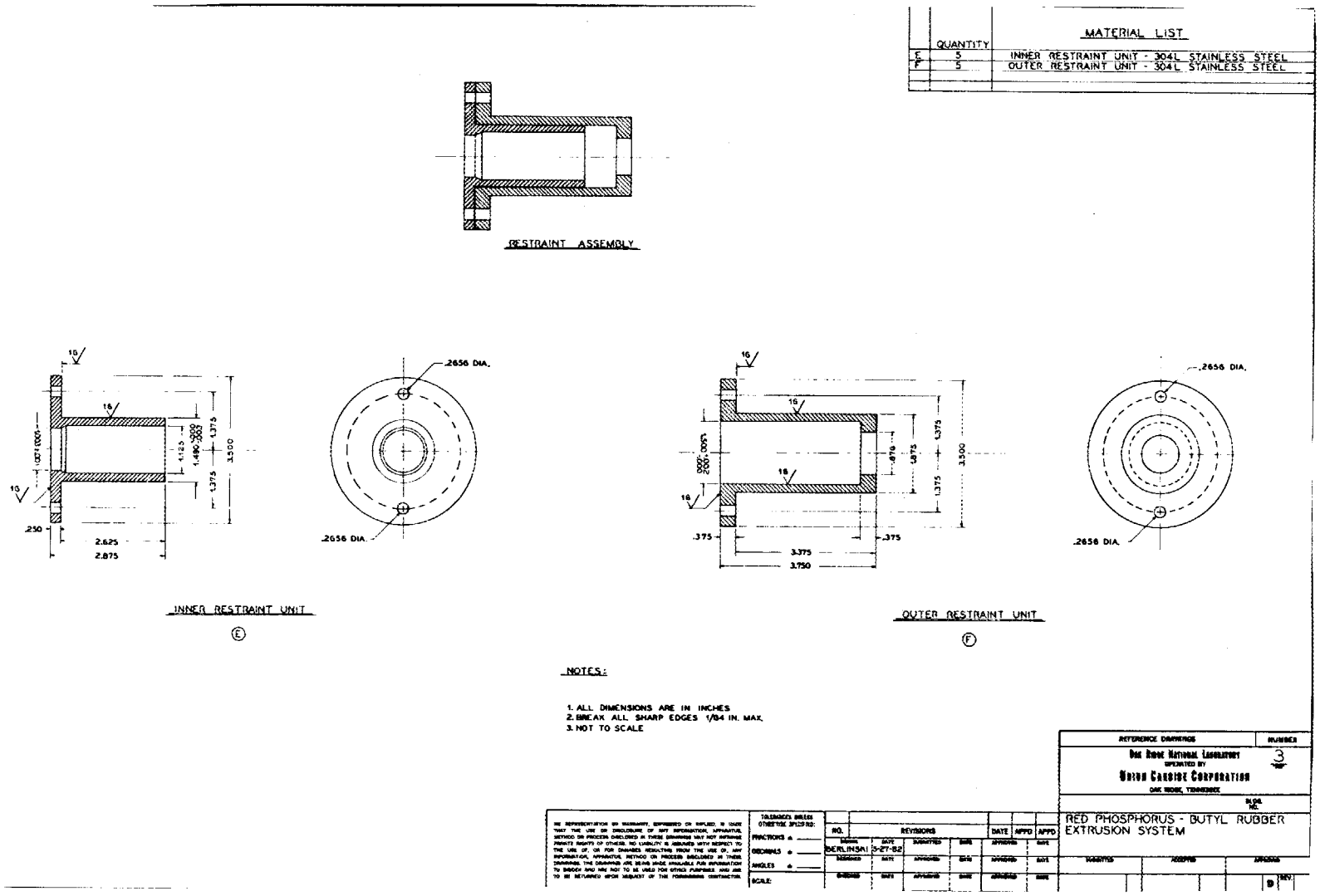

Figure A4. Extrusion Head Restraint Assembly

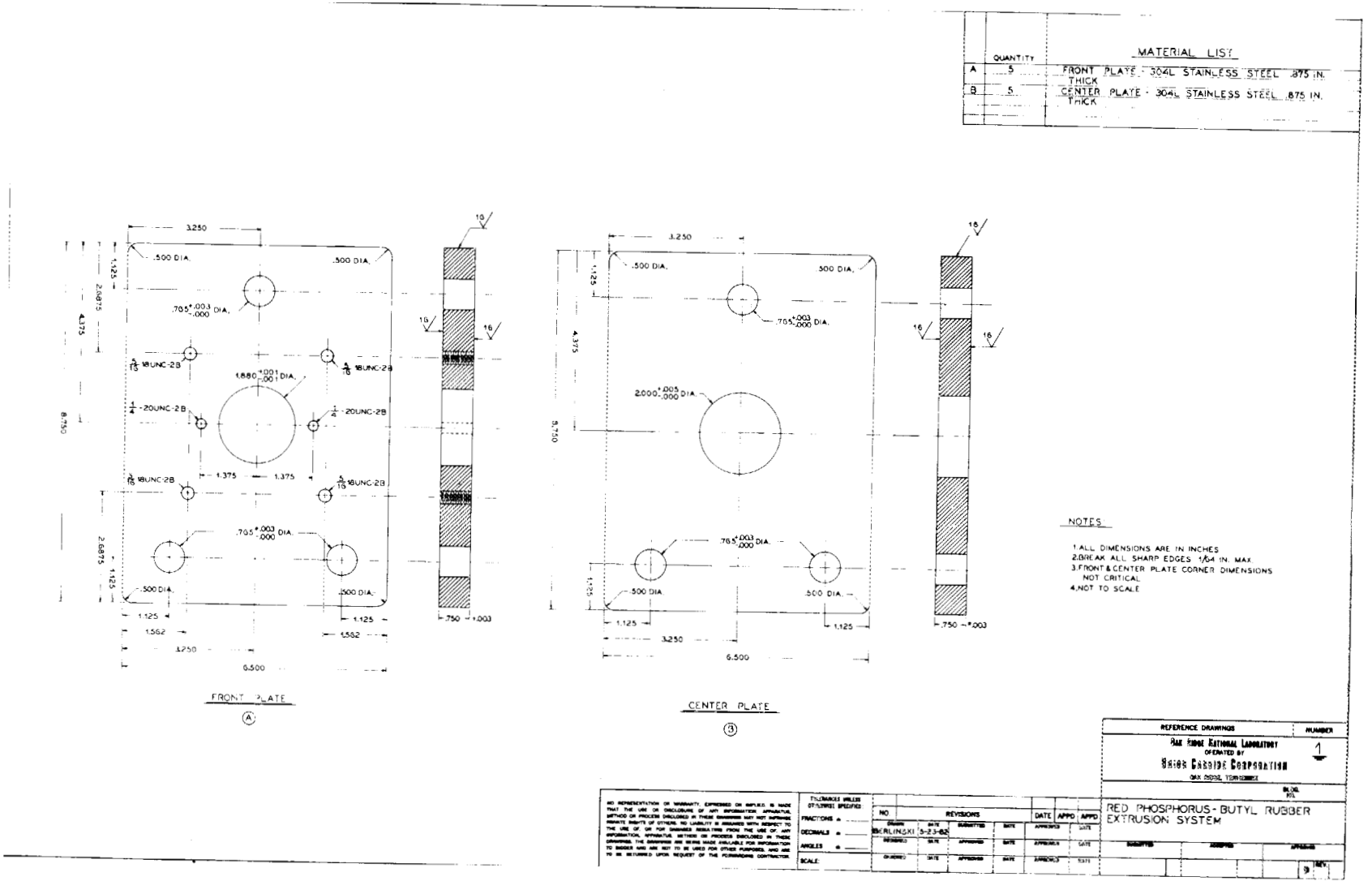

Figure A5. Generator System Front and Center Support Plates

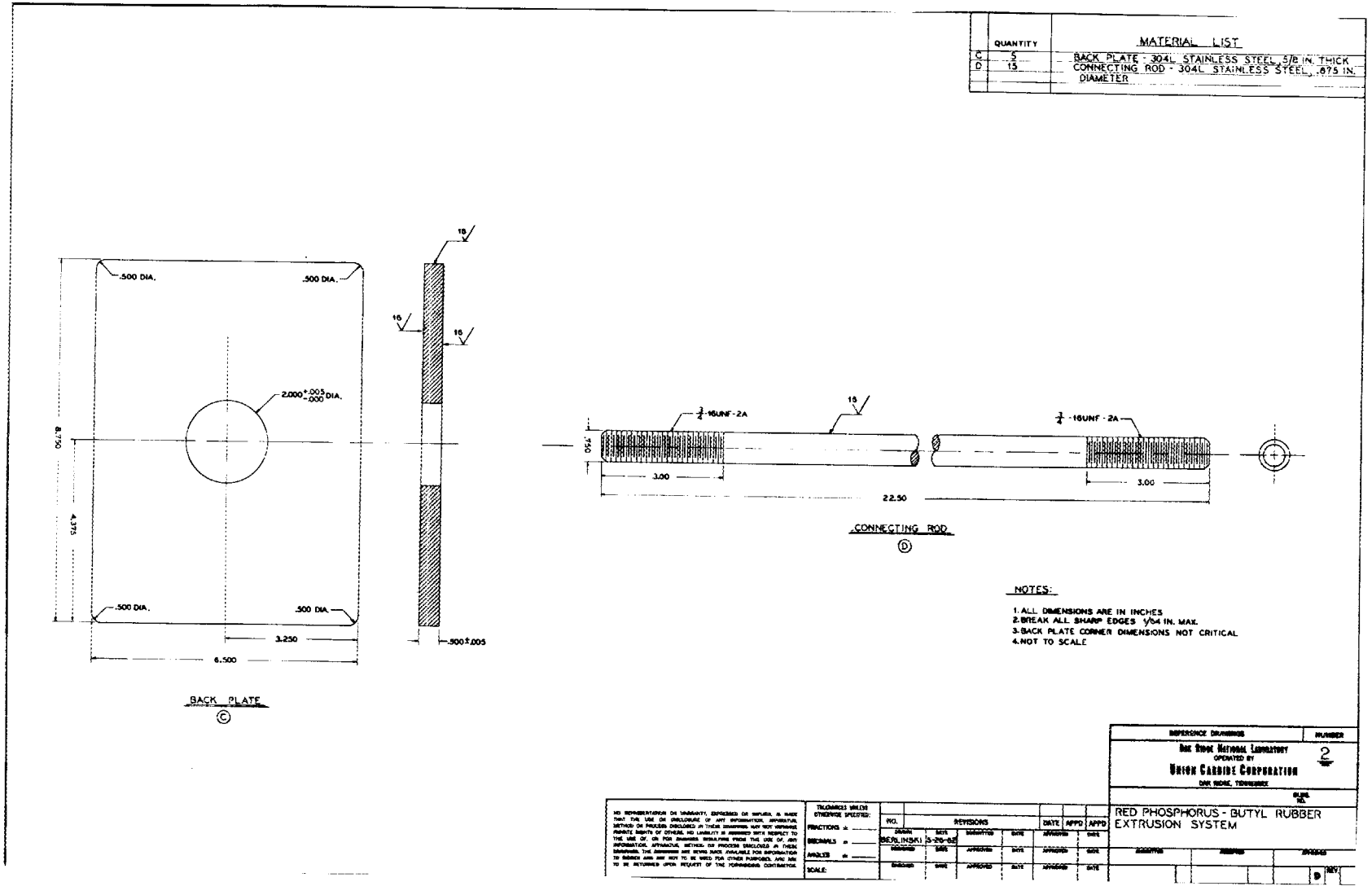

Figure A6. Generator System Rear Support Plate and Connecting Rod

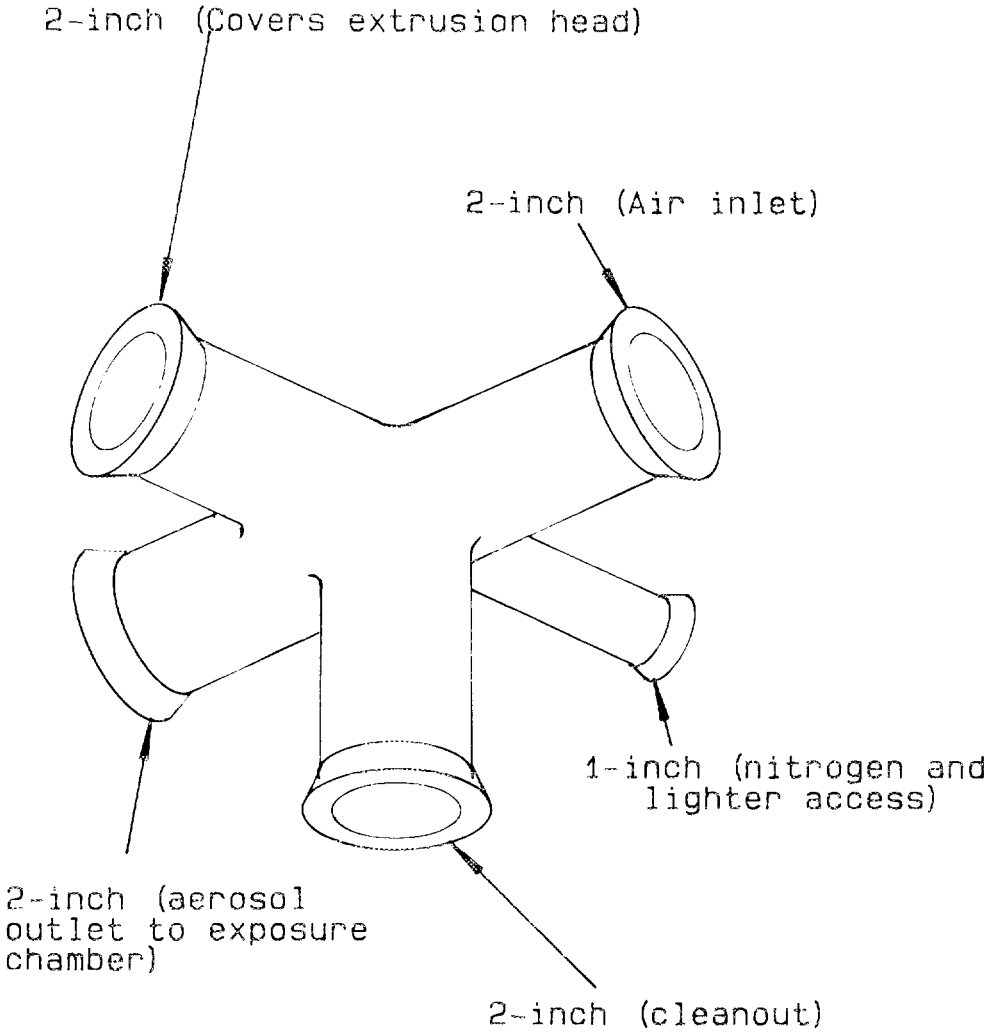

Figure A7. Glass Pipe Burn Chamber

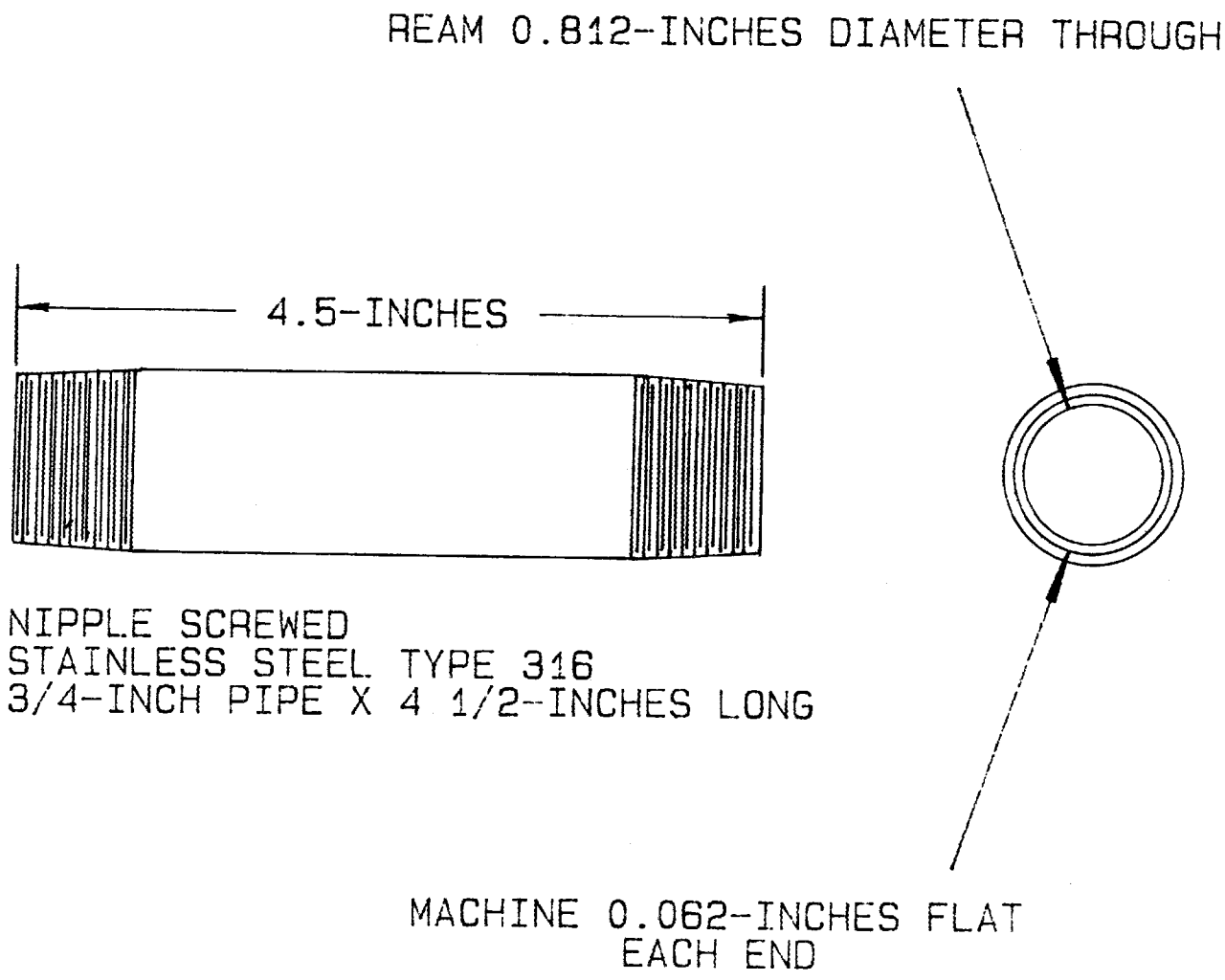

Figure A8. RPBR Storage Nipple

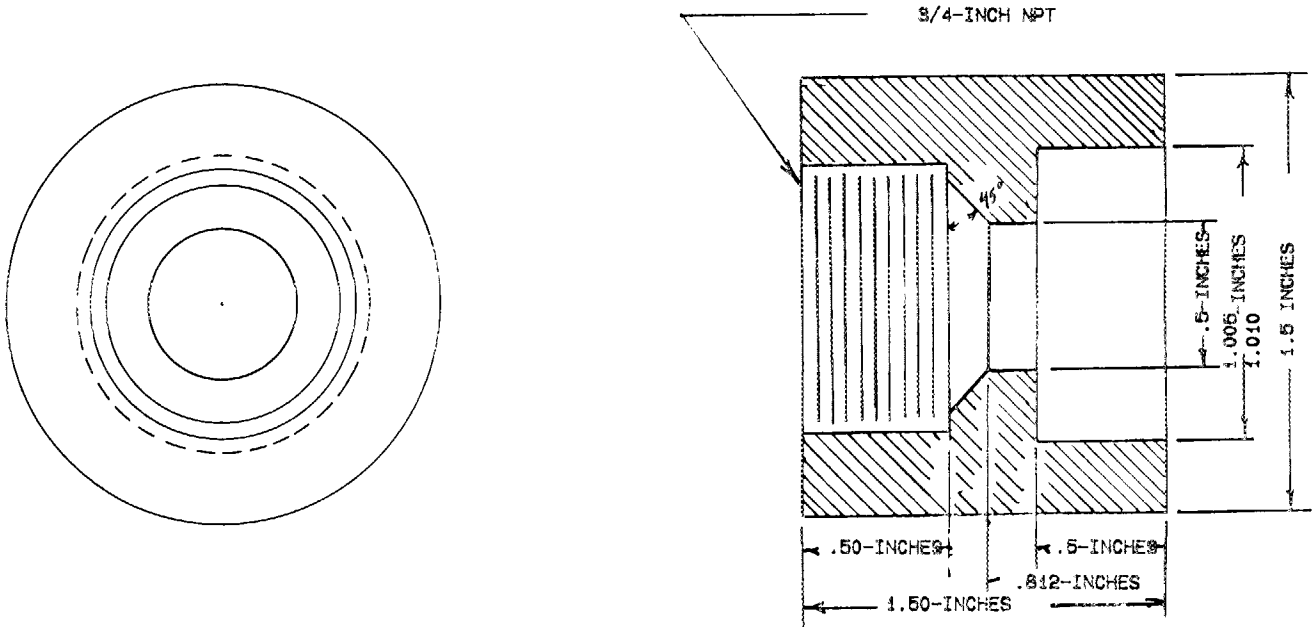

Figure A9. RPBR Loading Adapter

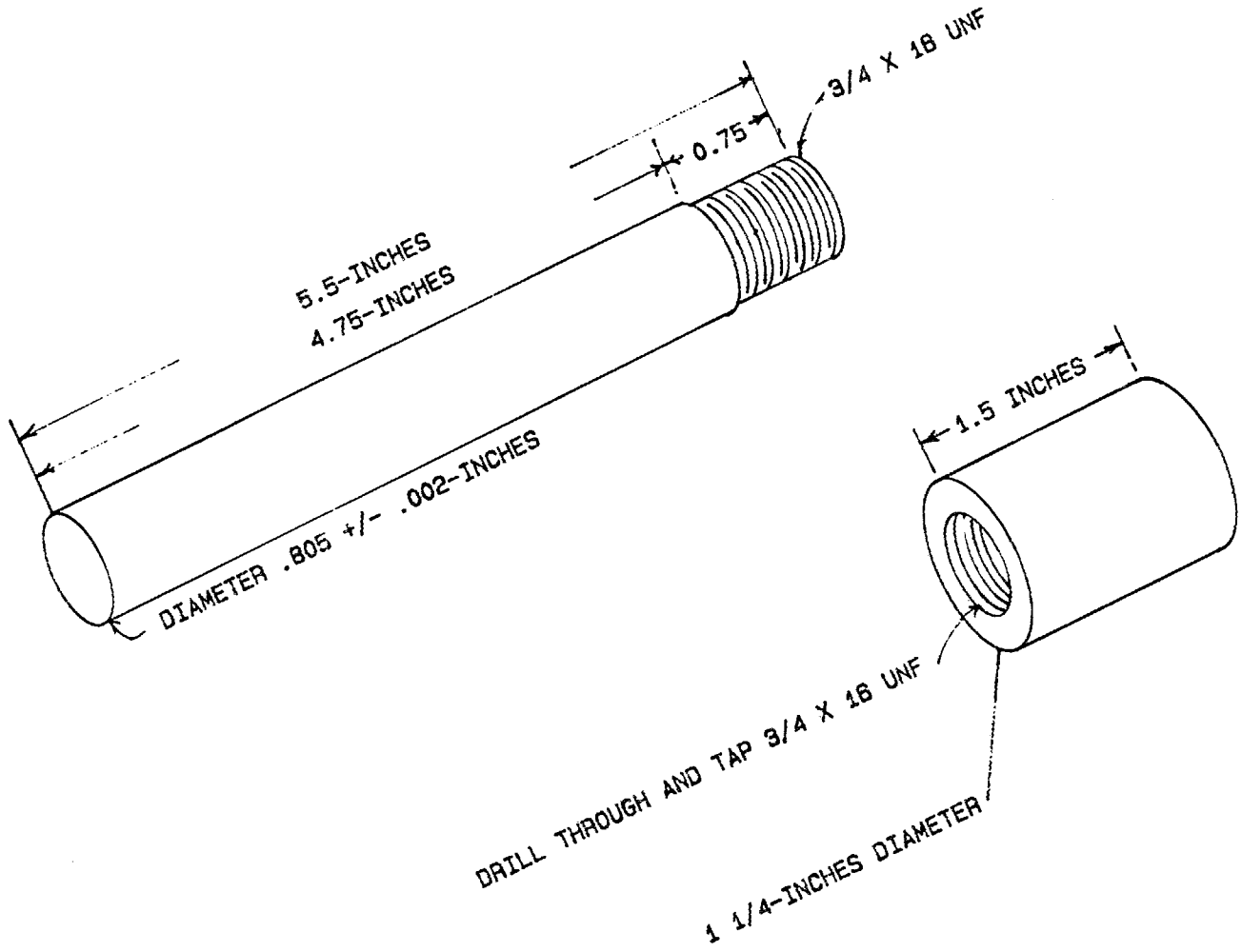

Figure A10. Extruder and Coupling for Loading RPBR

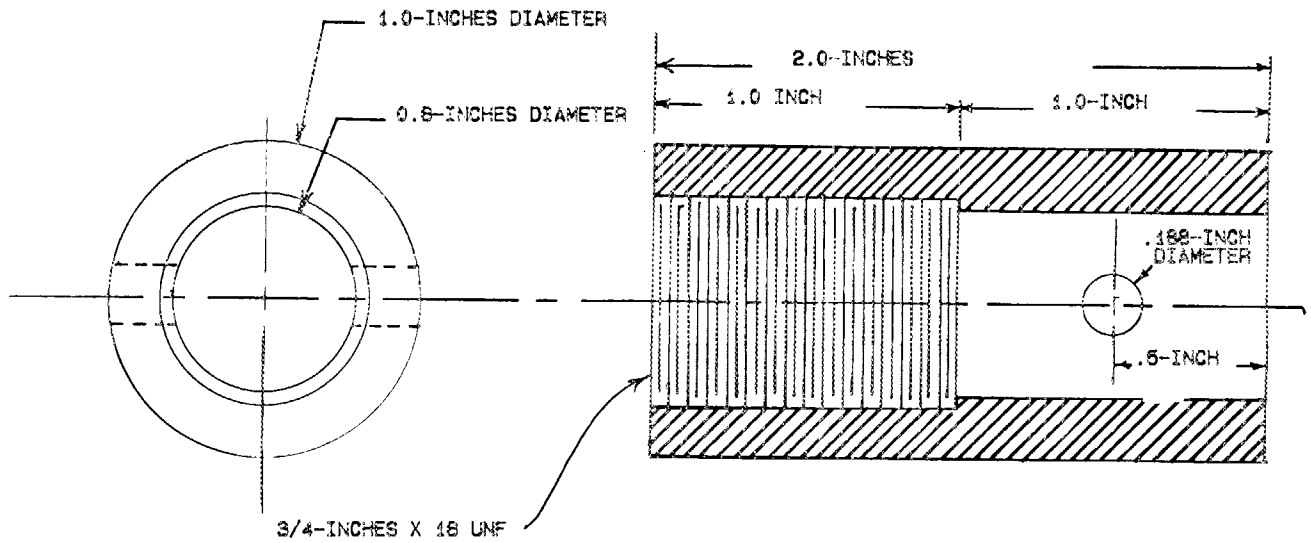

Figure A11. Coupling from Hydraulic Piston to Extrusion Piston

LITERATURE CITED

(1) Brazell-Ramsey, R. S., J. H. Moneyhun, and R. W. Holmberg, "The Chemical and Physical Characterization of Phosphorous Smoke for Inhalation Exposure and Toxicological Studies, ORNL/TM-9571.

(2) Holmberg, R. W., J. H. Moneyhun, and T. M. Gayle, "Generating, Monitoring, and Controlling Petroleum Aerosols for Inhalation Chamber Studies, ORNL/TM-8903 AD A134214.

PERSONNEL

The following personnel received support under Army Project Orders 9600, 0027, 1807, and 2802 in performance of work described in this report.

M. R. Guerin
R. W. Holmberg
J. H. Moneyhun
T. M. Gayle
D. D. Pair
P. Berlinski

PUBLICATIONS

The following publications resulted in whole or part from the work described in this report.

Brazell, R. S., R. W. Holmberg, J. H. Moneyhun, "Chemical Characterization of Selected Military Obscurants, Proceedings Chemical Systems Laboratory Conference on Obscurants and Aerosol Research, June 20-24, 1983.

Brazell, R. S., R. W. Holmberg, and J. H. Moneyhun, "Applications of HPLC/ FIA for the Determination of Polyphosphoric Acids in Phosphorous Smokes, J. of Chromatography 290, 163-172, 1983.

Holmberg, R. W. and J. H. Moneyhun, "A System for the Continuous Generation of Phosphorous Aerosol from Red Phosphorus Butyl Rubber, Proceedings 6th Symposium Smoke/Obscurants, Adelphi, MD, April 27-29, 1982.

Holmberg, R. W., R. S. Brazell, and J. H. Moneyhun, "Chemistry of Phosphorous Obscurant Smokes, Presented at the Second Biannual Environmental and Health Effects of Smokes and Obscurants Workshop, Pacific Northwest National Laboratory, Richland, WA, July 18-19, 1984.

Brazell-Ramsey, R. S., J. H. Moneyhun, and R. W. Holmberg, "The Chemical and Physical Characterization of Phosphorus Smoke for Inhalation Exposure and Toxicological Studies, ORNL/TM-9571.

DISTRIBUTION LIST

No. of Copies	
4	Commander US Army Medical Research and Development Command ATTN: SGRD-RMS Fort Detrick Frederick, MD 21701
12	Defense Technical Information Center (DTIC) ATTN: DTIC-DDA Cameron Station Alexandria, VA 22314
1	Dean School of Medicine Uniformed Services University of the Health Sciences 4301 Jones Bridge Road Bethesda, MD 20014
1	Commandant Academy of Health Sciences, US Army ATTN: AHS-CDM Fort Sam Houston, TX 78234
1	Librarian US Army Medical Bioengineering Research and Development Laboratory ATTN: SGRD-UBZ-I Fort Detrick Frederick, MD 21701
35	Commander US Army Medical Bioengineering Research and Development Laboratory ATTN: SGRD-UBG-M Fort Detrick Frederick, MD 21701
1	R. S. Brazell-Ramsey Building 4500-S; E-160 Oak Ridge National Laboratory P. O. Box X Oak Ridge, TN 37831

DISTRIBUTION LIST (Cont'd)

No. of Copies	
10	M. R. Guerin Building 4500-S; E-160 Oak Ridge National Laboratory P. O. Box X Oak Ridge, TN 37831
1	R. W. Holmberg Building 4500-S; E-160 Oak Ridge National Laboratory P. O. Box X Oak Ridge, TN 37831
1	J. H. Moneyhun Building 4500-S; E-160 Oak Ridge National Laboratory P. O. Box X Oak Ridge, TN 37831
1	T. M. Gayle Building 4500-S; E-160 Oak Ridge National Laboratory P. O. Box X Oak Ridge, TN 37831
1	Central Research Library Building 4500-N Oak Ridge National Laboratory P. O. Box X Oak Ridge, TN 37831
1	Department of Energy Oak Ridge Operations Attn: Mr. J. A. Lenhard, Assistant Manager for Energy Research and Development P. O. Box E Oak Ridge, TN 37831
1	Document Reference Section Building 9711-1 Oak Ridge National Laboratory P. O. Box Y Oak Ridge, TN 37831

DISTRIBUTION LIST (Cont'd)

No. of Copies	
3	Laboratory Records Building 4500-N; H-205 Oak Ridge National Laboratory P. O. Box X Oak Ridge, TN 37831
1	ORNL Patent Office Building 4500-N; M-130 Oak Ridge National Laboratory P. O. Box X Oak Ridge, TN 37830
166	Technical Information Center Department of Energy Oak Ridge, TN 37830 For DOE/TIC 4500 distribution under UC-4 Category