MARTIN MARIETTA ENERGY SYSTEMS LIBRARIES
3 4456 0050672 6

ornl

ORNL/TM-9635

OAK RIDGE NATIONAL LABORATORY

MARTIN MARIETTA

An Availability Assessment of a Centrifugal Contactor Solvent Extraction System

M. J. Haire
M. S. Grady
R. T. Jubin

OAK RIDGE NATIONAL LABORATORY
CENTRAL RESEARCH LIBRARY
CIRCULATION SECTION
4500N ROOM 175
LIBRARY LOAN COPY
DO NOT TRANSFER TO ANOTHER PERSON
If you wish someone else to see this report, send in name with report and the library will arrange a loan.
UCN 7969 3 9-77

CONSOLIDATED FUEL REPROCESSING PROGRAM

[redacted]

This document does not contain UCNI, ECI, or other unclassified sensitive information and has been approved for release to the public by:

David R Hamrin 7/13/2011
David R. Hamrin, ORNL Classification Officer Date

OPERATED BY
MARTIN MARIETTA ENERGY SYSTEMS, INC.
FOR THE UNITED STATES
DEPARTMENT OF ENERGY

Printed in the United States of America. Available from
the U.S. Department of Energy
Technical Information Center
P.O. Box 62, Oak Ridge, Tennessee 37830

This report was prepared as an account of work sponsored by an agency of the United States Government. Neither the United States Government nor any agency thereof, nor any of their employees, makes any warranty, express or implied, or assumes any legal liability or responsibility for the accuracy, completeness, or usefulness of any information, apparatus, product, or process disclosed, or represents that its use would not infringe privately owned rights. Reference herein to any specific commercial product, process, or service by trade name, trademark, manufacturer, or otherwise, does not necessarily constitute or imply its endorsement, recommendation, or favoring by the United States Government or any agency thereof. The views and opinions of authors expressed herein do not necessarily state or reflect those of the United States Government or any agency thereof.

ORNL/TM-9635
Dist. Category UC-86T
(Applied)

Consolidated Fuel Reprocessing Program

AN AVAILABILITY ASSESSMENT OF A CENTRIFUGAL CONTACTOR SOLVENT EXTRACTION SYSTEM

M. J. Haire
M. S. Grady*
R. T. Jubin
Fuel Recycle Division

*On assignment from the United Kingdom Atomic Energy Authority.

Date of Issue: August 1985

NOTICE This document contains information of a preliminary nature. It is subject to revision or correction and therefore does not represent a final report.

Prepared by the
OAK RIDGE NATIONAL LABORATORY
Oak Ridge, Tennessee 37831
operated by
MARTIN MARIETTA ENERGY SYSTEMS, INC.
for the
U.S. DEPARTMENT OF ENERGY
under Contract No. DE-AC05-84OR21400

MARTIN MARIETTA ENERGY SYSTEMS LIBRARIES
3 4456 0050672 6

CONTENTS

ABSTRACT v

1. INTRODUCTION 1

2. SUMMARY AND CONCLUSIONS 3

3. EQUIPMENT SYSTEM DESCRIPTION AND STUDY GROUND RULES 7
   - 3.1 Flowsheet 7
   - 3.2 Centrifugal Contactors 7
   - 3.3 Ground Rules of the RAM Assessment 10
   - 3.4 Maintenance Philosophy 11

4. FAILURE MODES AND EFFECTS ANALYSIS 13

5. FAULT-TREE ANALYSIS 17

6. DATA FILES 19
   - 6.1 Failure-Rate Data 19
   - 6.2 Repair Time Data 20

7. CALCULATIONS 21
   - 7.1 Basic Premises and Equations 21
   - 7.2 Worksheets 22
   - 7.3 Master Chart 24

8. DISCUSSION OF RESULTS 27
   - 8.1 Qualitative Considerations 27
   - 8.2 Availability Calculations 28
   - 8.3 System Design Improvements 29
     - 8.3.1 Electrical Cable Terminals 29
     - 8.3.2 Surge Capacity 30
     - 8.3.3 Weir Air Pressure 30
     - 8.3.4 Temperature Baths 30
     - 8.3.5 Equipment Redundancy 31
     - 8.3.6 The Capability of Operating with a Dead Stage 31
     - 8.3.7 Composite Improvements 33
   - 8.4 Further Work 34
     - 8.4.1 Host Computer and Cell-Wall Penetrations 34
     - 8.4.2 Feed Makeup Systems 34
     - 8.4.3 The Importance of Maintenance Equipment 34

REFERENCE 34

Appendix A. FAILURE MODES AND EFFECTS ANALYSIS WORKSHEETS 35

Appendix B. FAULT-TREE LOGIC MODEL 53

Appendix C. BASIC DATA AND CALCULATION WORKSHEETS 73
   - References for Appendix C 84

ABSTRACT

A systematic and detailed reliability, availability, and maintainability assessment was made of the preconceptual design of the Breeder Reprocessing Engineering Test solvent extraction system. Initially, the computed availability for the five cycles of solvent extraction was less than the goal for the facility. Contributions to the downtime were identified. Improvements in specifications, design, and equipment configurations that raise the predicted availability are recommended.

1. INTRODUCTION

The Consolidated Fuel Reprocessing Program (CFRP) is developing the technology for the reprocessing of irradiated nuclear power reactor fuel. In the Integrated Equipment Test (IET) facility at Oak Ridge, Tennessee, large-scale reprocessing equipment is being tested in a uranium-active environment. Hot testing and demonstration of similar but smaller equipment have been proposed for the Breeder Reprocessing Engineering Test (BRET). The BRET would be located in the Fuels and Materials Examination Facility (FMEF), an existing facility at Hanford, Washington. The BRET would reprocess irradiated Fast Flux Test Facility (FFTF) fuel at a throughput of 6 MTHM/year (0.1 MTHM/d). The BRET, as proposed, would be a versatile system intended to serve as a test bed for evaluating advanced reprocessing equipment and would be remotely operated and maintained.

A key part of any reprocessing plant is the solvent extraction system, whereby uranium and plutonium are separated from the highly radioactive fission product wastes, partitioned from each other, and purified for remanufacture into new reactor fuel. The process is carried out by repeatedly bringing acid and solvent solutions into intimate contact, allowing mass transfer to take place and then separating the immiscible phases. The two phases flow countercurrently. In BRET, centrifugal contactors will be used to contact and separate the aqueous and organic phases throughout the solvent extraction system.

The choice of centrifugal contactors, a new technology for breeder fuel reprocessing, is an aspect of the plant design where reliability, availability, and maintainability (RAM) analysis is significant. At present preconceptual design phase of the BRET, RAM analysis contributes to the equipment development program, the establishment of the layout (redundancy) of plant equipment, and to the establishment of surge capacity. At the detailed design phase, RAM analysis indicates where special testing or particularly high quality components are required.

Two factors influence the availability of equipment systems: (1) the reliability of the system (how often it fails) and (2) the maintainability of the system (how long repair takes following a failure). The RAM analysis for a plant is a highly systematic review of plant equipment system layout and design. Reliability and maintainability of each equipment item and the impact on the process should equipment fail are considered. The analytical methods used in this study were (1) the failure modes and effects analysis (FMEA), (2) the construction of a fault tree, and (3) calculation of availability from the best available failure rate and maintenance time data.

Accurate availability predictions depend on substantial, relevant, and equipment-specific data. These data are not on hand for much of the equipment used in nuclear fuel reprocessing. However, judicious use of generic data bases allows the allocation of priorities for future design development in a more rigorous, quantifiable manner than through the use of intuition alone.

This report describes the detailed RAM assessment of the BRET HA bank of centrifugal contactors. The results of this detailed analysis were extrapolated to the whole H cycle and subsequently to the complete solvent extraction system. The predicted availability is compared to the availability goal for the system. The areas of plant and equipment design that degrade reliability are identified, and several design improvements are recommended.

2. SUMMARY AND CONCLUSIONS

A systematic, thorough RAM assessment was conducted of the extraction-scrub bank of centrifugal contactors of the BRET codecontamination solvent extraction cycle. This detailed analysis was extrapolated to include the stripping bank of contactors to provide an availability prediction for the whole H cycle as well as the remaining four solvent extraction cycles. An FMEA was performed, and a fault tree was constructed. Generic data bases were applied in the prediction of system availability.

The overall inherent availability goal of BRET is 72%. This goal is based on the achievements of defense plants and the planned availability of commercial reprocessing plants in the United States. This goal is the basis for the apportionment[1] of the overall plant availability among plant systems and subsystems. Among the many systems that contribute to this overall facility goal are the five solvent extraction cycles whose composite system goal is ~99.9%. The computed base case availability prediction of this study for all five cycles is ~68%. Table 2.1 is a prioritized availability critical items list that shows the

Table 2.1. Prioritized availability critical items list (base case)

Priority	Item
1	Cable terminals
2	Cell-wall electrical penetrations
3	Host-computer programming
4	Centrifugal pump
5	Contactor motors
6	Contactor high-level alarm
7	Motor bearings
8	Metering pumps
9	Photometer
10	Fluidic pump
11	Thermocouples in feed-temperature control
12	Process control-module programming
13	Flow control (sensor transmitter)
14	Host-computer hardware
15	Flow-control valve
16	Pressure-control valve
17	Organic flow-control valve
18	Crud-plugs unit

major contributors to plant downtime for the five cycles. Note that the base case includes some systems not normally associated exclusively with the solvent extraction system, namely, the host computer and cell-wall penetrations. Also, the base case assumes zero intercycle surge capacity about the solvent extraction system because the present surge capacity provided in the BRET is undergoing review and may change.

Table 2.2 shows the individual (and composite) design improvements that upgrade the solvent extraction system availability. Specifically, recommended design improvements are:

1. providing a 12-h inventory surge capacity between cycles;
2. using higher quality electrical terminals;
3. designing the centrifugal contactor so that a bank of reactors can operate with a dead stage; and
4. providing redundant centrifugal pumps, photometers, and flow control valves.

These composite actions provide an H cycle–predicted availability of 0.999298 versus an availability goal of 0.999648.

Table 2.2. Design improvements for the HA cycle

	Availability	Number of plant shutdowns per campaign
Goal	0.999648	
Base case prediction	0.931450	7.10
Individual improvements		
Surge capacity: 3 h	0.937991	5.32
12 h	0.985163	0.263
Improved (× 100) electrical terminals	0.957889	3.88
Capability of operating with a dead stage	0.9530942	4.54
Redundancy: centrifugal pump	0.933202	6.95
photometer	0.933202	6.99
flow-control valve	0.932449	7.00
Composite improvements	0.999298	0.0012

Other items such as deleting the air pressure–controlled weirs from the contactor design and simplifying process solution feed temperature controls (i.e., contactor bank temperature baths) will significantly improve the system's reliability. However, these modifications are paced more by functional than reliability considerations. The critical items list indicates that cell wall penetrations and host computer programming are significant contributors to downtime. These two items will appear in every RAM analysis of the process cell

equipment systems. Therefore they were removed from the calculation of the solvent extraction system availability and given their own category and set of availability goals.

A large number of system equipment item failures will remain even though only a small number of them will actually shut the plant down (0.0012 plant shutdowns per campaign for the HA cycle as given in Table 2.2). Calculations indicate that the mean time to repair of failed in-cell equipment for all five solvent extraction cycles will be ~6.7 d/30-d campaign. That is, meeting a system availability goal does not mean that equipment does not fail. It merely means that the system can continue to operate with failed equipment for a limited period of time.

In summary, the availability of the base case BRET solvent extraction system was computed to be quite low—93.145% for the HA cycle. But, the system can meet its availability goal of 99.9648% by the implementation of several specification, design, and equipment configuration changes. Among the design improvements that should receive consideration are the increase of the intrasystem material inventories (i.e., surge capacity), improvement of the quality of electrical terminals by a factor of 100, design of banks of centrifugal contactors capable of operating with a dead stage within the bank, and selective equipment redundancy (pumps, photometer, valves).

3. EQUIPMENT SYSTEM DESCRIPTION AND STUDY GROUND RULES

3.1 FLOWSHEET

An important early activity of a RAM assessment is a precise definition of the equipment system to be analyzed. This is especially true for the BRET, which is presently in the preconceptual design phase and, therefore, is subject to major design changes. Figure 3.1 shows an overview flowsheet for the HA contactor and its associated feeds that was used in these evaluations.

The aqueous active feed is pumped from the feed adjustment tank to a constant fluidic volume by an air-pulsed fluidic pump. The fuel is then metered into the polishing clarifier by an electric, motor-driven, constant-volume feeder (a waterwheel-type device). The aqueous stream flows by gravity from the polishing clarifier, through the feed lines and the multiple centrifugal contactor stages. In each stage the aqueous stream is contacted with and separated from the organic flow. Two separate nitric acid streams enter the bank in the scrub section. These streams are pumped by metering pumps which are located with the inactive feed makeup tank outside the cell. As the aqueous flow leaves the contactor bank (HAW), it passes directly to the highly active waste storage tank.

The organic stream to the bank is drawn from the solvent recovery system. At the outlet of the clean solvent tank a centrifugal pump pressurizes a solvent main. The feed to the HA extraction-scrub bank is drawn from this main at a controlled flow via a flow control valve. The organic stream exiting the HA bank is loaded with heavy metal and passes to the HC strip bank.

3.2 CENTRIFUGAL CONTACTORS

The annular design of a centrifugal contactor, illustrated in Fig. 3.2, was developed initially at the Argonne National Laboratory. A CFRP and Savannah River Laboratory (SRL) collaborative program has produced the bank of centrifugal contactors in the IET. The BRET design is based on information from both sources. The aqueous and organic (immiscible) fluids flow into the annular mixing zone between the spinning rotor and stationary housing. A liquid-liquid dispersion is created by turbulent couette mixing in the annulus giving a high surface area for mass transfer. The dispersion flows by gravity to the rotor inlet in the base of the rotor and on into the separating zone inside. Here the dispersion breaks rapidly under a centrifugal force of ~300 g. The separated phases flow over individual weirs at the top of the rotor and are thrown by centrifugal force into their respective collector rings in the housing. A slinger-ring prevents the aqueous exit stream from running down the outside of the rotor or housing into the organic collector ring. Each liquid leaves its collector ring through a tangential exit port. Thus, each rotor acts as a

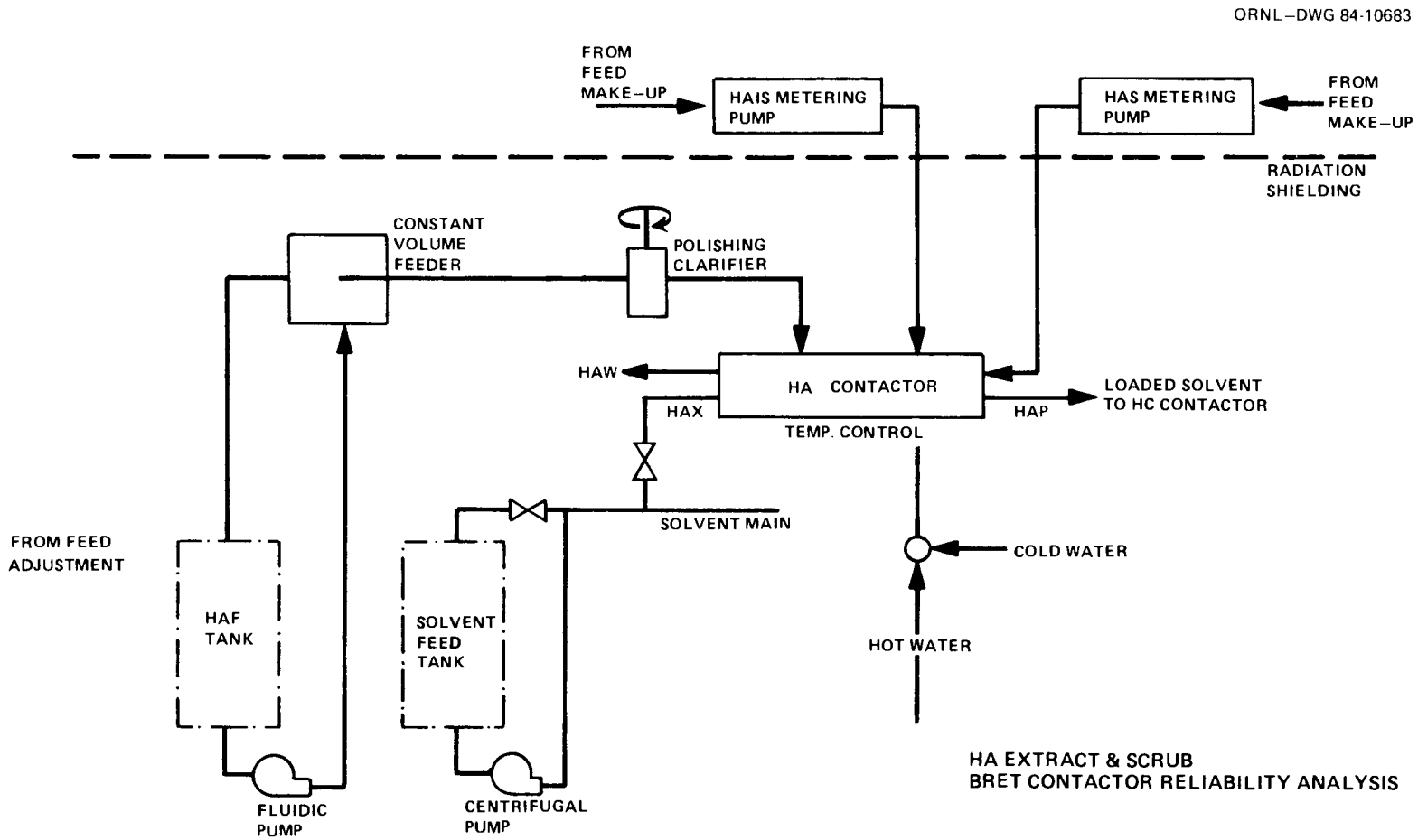

Fig. 3.1. HA extract and scrub BRET contactor reliability analysis.

ORNL-DWG 85-6892

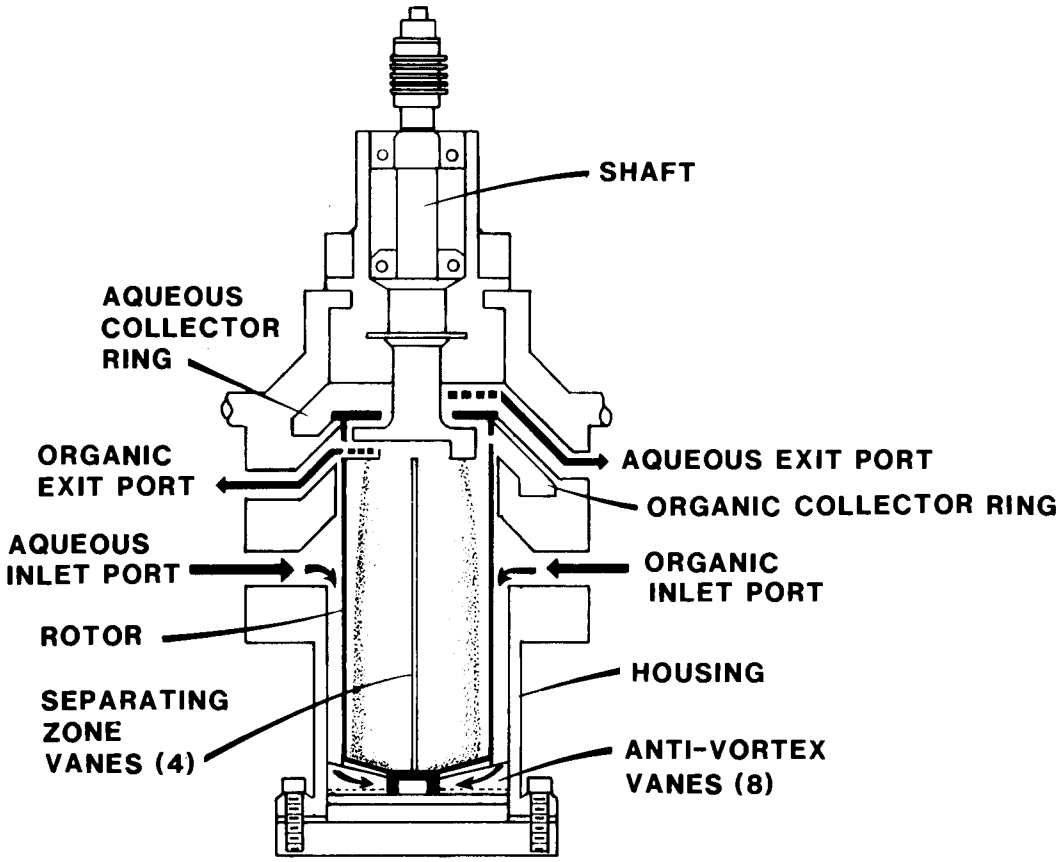

Fig. 3.2. Schematic cross-sectional view of ORNL-designed centrifugal contactor.

mixer, centrifugal settler, and a pump. For multistage operation, a series of similar units are connected together. The exiting streams from each stage flow countercurrently by gravity to adjacent stages.

Normally, contactor throughput is limited by the thickness of the dispersion band in the separating zone of the rotor. At a given rotor speed, the dispersion band thickness increases with throughput until it reaches either the organic weir (giving a carryover of aqueous phase in the organic exit stream) or the aqueous underflow weir (giving a carryover of organic phase in the aqueous exit stream). Separation was considered satisfactory in this study if phase cross contamination did not exceed 1% by volume of the exiting stream.

In the simplest rotor design the aqueous phase flows through the underflow weir and uninterrupted over a single aqueous weir. As an alternative, two aqueous weirs may be used as shown in Fig. 3.2. The air pressure over the inner (lower) weir can be varied, allowing the position of the dispersion band in the rotor to be controlled. If the pressure is too low, the dispersion band reaches the aqueous underflow, and organic phase appears in

the aqueous effluent. If the pressure is too high, aqueous phase appears in the organic effluent. For maximum throughput, there is a unique weir air pressure that results in the dispersion band extending from the organic weir to the aqueous underflow. Any further increase in flow results in the cross contamination of both effluent streams.

Both the total flow rate and the organic to aqueous (O/A) flow rate ratio are important in contactor operation. As the O/A ratio increases at constant total throughput, the liquid height over the organic weir increases, and that over the aqueous weir decreases. This shifts the dispersion band outward from the organic weir to the aqueous underflow. The converse is true when the O/A ratio decreases. So, when maximum throughput is exceeded, the organic phase will be entrained in the aqueous effluent at O/A ratios above the design O/A ratio, and vice versa. At the design O/A ratio, the full volume of the separating zone will be used, and both effluents will experience cross-phase contamination if maximum throughput is exceeded.

3.3 GROUND RULES OF THE RAM ASSESSMENT

The following is a list of ground rules used in conducting the RAM assessment of the solvent extraction system of centrifugal contactors. The detailed analyses focus attention on the extraction-scrub grouping of equipment, thereby avoiding the repetition of the equipment present in all five solvent extraction cycles.

1. All process equipment was included from the solvent storage tank and HA feed tank to the on-line analysis at the outlet of the 16-stage HA extraction-scrub bank.

2. The failure criterion was that the organic product and aqueous raffinate streams exiting the bank must both be within specification. The possibility of the system operating at off-specification for some time period was not evaluated.

3. The centrifugal contactors to be used in the BRET are assumed to be similar to those installed in the IET. The most significant difference between the IET and BRET centrifugal contactor is the change from large ac motorized spindles to smaller, less rigid dc motors. This allows reduction of the spacing between contactors and a more compact machine design.

   The 12-cm-diam IET contactor was chosen for detailed analysis because it was considered prudent to evaluate a well-established contactor design. This ground rule kept the study separate from the ongoing design work for the BRET 5.5-cm-diam contactor and maintained the study's relevance to a scaled-up flowsheet.

4. All feed-stream chemical compositions and utility services to the extraction-scrub system of contactors were assumed to meet their individual design requirements. The interfaces between these other systems and the solvent extraction system were indicated on the fault tree as undeveloped events.

5. No equipment redundancy or surge capacity was considered in the base case calculation. It was assumed that all the stages of the contactor bank needed to operate to maintain the product quality. The adequacy of the BRET surge capacity is being investigated separately. Thus, no surge capacity was considered in the base case calculation to give this work more permanency. These assumptions were refined in sensitivity studies as the work progressed.

6. Repairs were assumed to be relatively straightforward in estimating maintenance times. All maintenance equipment was assumed to be at hand for the repair job and functioning correctly. All needed spare parts were assumed to be warehoused on-site. It was assumed that the detailed design of the equipment facilitates remote maintenance and gives adequate access for handling and viewing.
7. Operator errors were not included in the availability calculations but are shown on the fault tree.
8. The detailed design and manufacture of all process equipment within the scope of the study was such that they meet their functional requirements when not in a failed state.
9. The dedicated Process Control Module (PCM) was considered to be part of the solvent extraction system. The host computer, as well as the cell-wall electrical and electronic penetrations are not part of the solvent extraction system but were included to add perspective. The host computer and the cell-wall penetrations were removed from the calculations in the final recommended design.

3.4 MAINTENANCE PHILOSOPHY

The BRET is to be a canyon-type facility, with modules containing the process equipment placed against the process cell walls. A center aisle will be used for advanced servomanipulator access to the front and sides of the modules for maintenance. A crane will be used to maneuver the modules in the event of major maintenance activities or plant modifications.

Equipment in the process cell is designed to be remotely maintained and replaced. The centrifugal contactors will be demountable so that the motor-rotor assembly can be removed. The motor and rotor can be decoupled and either, or both, replaced. In the event of a serious difficulty, the whole four- or eight-pack assembly of centrifugal contactors can be removed and replaced.

4. FAILURE MODES AND EFFECTS ANALYSIS

An FMEA was performed early in the RAM assessment as a rigorous check to ensure that all relevant items were included in the fault tree and that the failures considered actually affect the process and are not trivial to repair or reset. Initially, a complete list of all equipment components within the scope of the study was made, based on the flowsheets and the equipment drawings of the 12-cm contactor. Then, each item in the equipment list was systematically and critically examined for its potential modes of failure, for the causes of that failure, for the effect of that failure on the operation of the system, and for the corrective action required to resolve the fault or to mitigate its consequences. The BRET solvent extraction system is at the preconceptual stage of design, which necessarily limits the detail of the analysis.

Table 4.1 is an example of a summary worksheet of the FMEA. A complete set of detailed worksheets is given in Appendix A.

The first column of the worksheet lists the item name and its function. The second column lists realistic probable failure modes, postulated on the basis of equipment specification requirements. The third column lists the cause of each failure mode, which helps in estimating the probability of occurrence and formulating recommended corrective action. The consequences of each assumed failure mode are recorded in the fourth column. The failure effect identifies the impact of failure on the operation and function of the item under consideration (and identifies the next higher tier item in a fault tree). The fifth column indicates how the failure is detected, or, the symptoms of equipment system operation that signify that a malfunction has occurred.

The sixth column of the worksheet identifies the importance of a particular failure mode to system availability. (This column is usually entitled "criticality" of failure, but this term is not used here because of its nuclear connotations in a fuel reprocessing plant.) The importance of a particular fault is measured by the combination of the probability of occurrence, indicated by the hazard rate (failure frequency), and the impact, severity, or consequences of the failure. The true impact of a failure mode is best defined by the combination of probability and impact. Consequently, the importance matrix, shown in Fig. 4.1, provides an orderly, systematic guide for assessing the importance of a given fault. The location of each failure mode on the matrix of Fig. 4.1 was obtained in consultation with CFRP staff who are familiar with the BRET solvent extraction system and remote maintenance provisions. Those failure modes falling within the shaded area are important, nontrivial failure events that are given detailed consideration.

Applying the step-by-step FMEA procedure to every item in a system parts list enables one to say that the failure of every item in the system was considered, though only those faults having a significant impact (those that lie in the shaded area of Fig. 4.1) are given detailed evaluations.

ORNL–DWG 84-10681

Table 4.1. Example FMEA form for BRET contactor reliability analysis

ITEM NAME/FUNCTION	FAILURE MODES	FAILURE CAUSES	FAILURE EFFECTS	FAILURE DETECTION	IMPORTANCE	CORRECTIVE ACTION REQUIRED
ROTOR	WEIR BLOCKAGE	ACCUMULATION OF SOLIDS	REDUCED STAGE EFFICIENCY FROM HIGH ENTRAINMENT	PROCESS INSTRUMENTS	M2	REPLACEMENT
MOTOR	LOSS OF DRIVE	BEARING FAILURE WINDING FAILURE	BANK SHUTDOWN	VIBRATION MONITOR SPEED MONITOR	H2	REPLACEMENT
MOTOR–ROTOR COUPLING	MECHANICAL FAILURE, ROTOR SLOWS OR STOPS	VIBRATION CORROSION	REDUCED STAGE EFFICIENCY		M3	TIGHTEN LOCK NUT REPLACE DRAW BAR

ORNL-DWG 84-10682

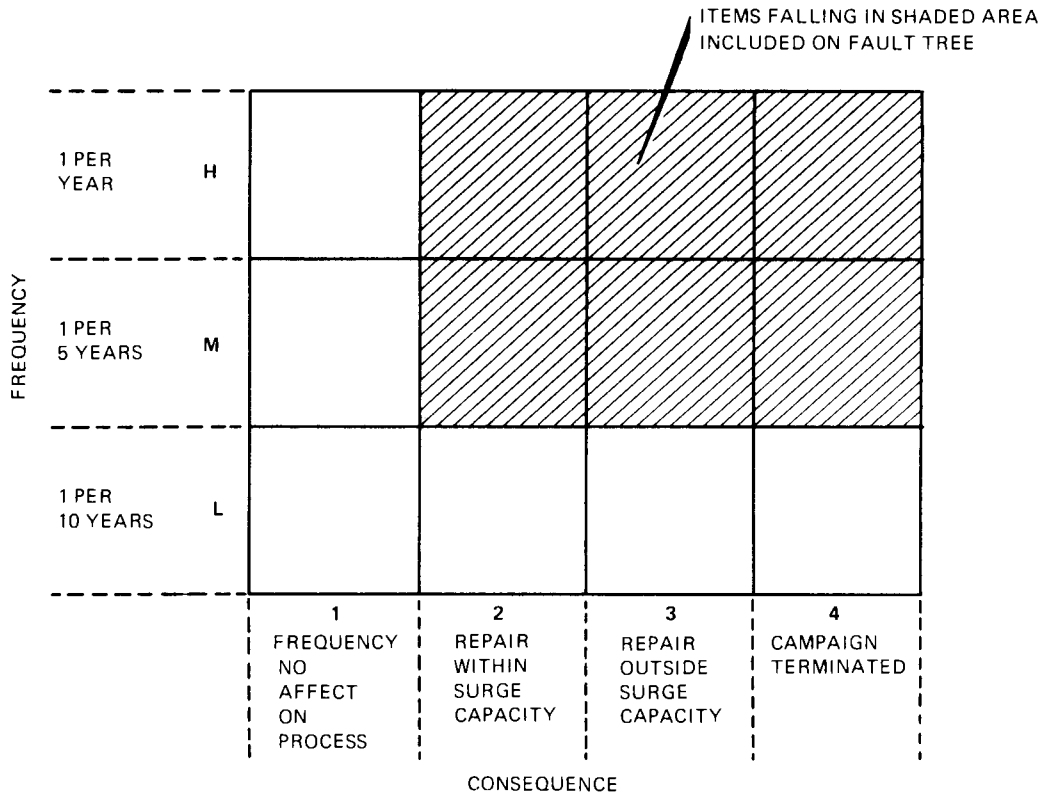

Fig. 4.1. Important rating matrix: centrifugal contactor RAM analysis.

Column seven lists the corrective action required to resolve or mitigate the failure or the consequence of the failure. Failure rate data and maintenance time data were also developed as part of the FMEA exercise. This information is tabulated separately in the calculation worksheets.

In summary, the FMEA activity provided a list of equipment items with failure modes and effects that contribute significantly to system unavailability. The significant equipment failure modes identified became the basic failure events in the system fault tree logic model. The estimated failure rates and repair times provided the fundamental information for the quantitative analysis of the system model. The categorization of probable failure consequences helped identify candidates for sensitivity analyses.

5. FAULT-TREE ANALYSIS

The objective of constructing a fault tree for the solvent extraction system was to develop a logic diagram that described the ways in which the system would fail to meet its functional goal. The goal of the BRET HA bank of contactors is to produce an organic product and aqueous raffinate that meet flowsheet specifications. Fault-tree analysis has a number of functions and benefits. The analysis forces the analyst to actively seek out failure events deductively. Fault trees provide a visual display of how a system malfunctions and enable easier understanding of the system by persons other than the designer. The trees point out critical aspects of system behavior and provide a benchmark against which to measure design modifications. Fault-tree analysis provides a basis for quantitative analysis using Boolean algebra techniques.

The fault tree was produced during team meetings utilizing specialists in various disciplines to deal with specific topics; for example, engineers from the Instrumentation and Controls Division (I&C) and the BRET project. The fault-tree construction provided a discipline for a step-by-step, systematic, orderly examination of the solvent extraction system. Several broad topics that provoked considerable discussion during construction of the fault tree were (1) the merit of temperature baths for the centrifugal contactors to control process solution temperatures, (2) the impact and advisability of deleting weir air pressure to control the dispersion interface, and (3) the need for fundamental research in extraction chemistry.

The top of the developed fault tree is shown in Fig. 5.1. While the top event represents the fact that the exit streams do not meet product specifications, intermediate events (squares) are faults dealing with process variables. The basic events (circles) shown in the more detailed fault tree of Appendix B are the component failures listed in the FMEA worksheets (Appendix A). The transfer gate (triangle B) indicates a branching into a lower tier of the tree shown in Fig. 5.1. Transfer gates (triangles I, D, and L) indicate the presence of even lower tiers of the tree. Appendix B gives the completely developed fault tree. Certain broad fault classifications (e.g., rotor speed control, control error, etc.) occur repeatedly throughout the fault tree. This enabled the fault tree to be modularized. Therefore, a given transfer gate may occur several places in the tree. Note in Fig. 5.1 that the transfer gate L occurs twice.

ORNL-DWG 85-12241

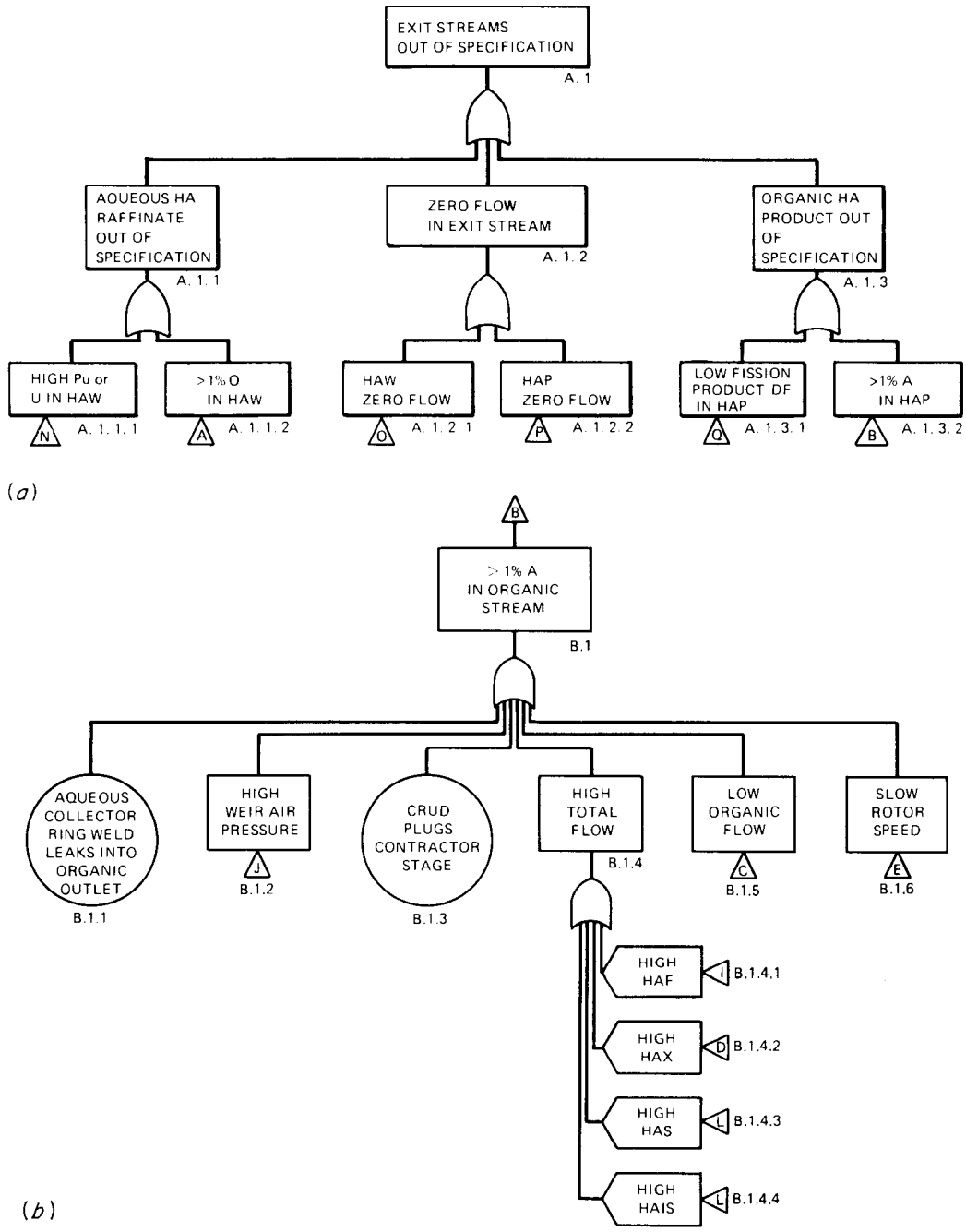

Fig. 5.1. Fault tree for the extraction-scrub section of the HA cycle: *(a)* top and *(b)* lower tier portion.

6. DATA FILES

A data file of failure rates and repair times was compiled for all the basic events of the fault tree. The data and source references for the reliability data are given in Appendix C. The various tables of Appendix C are divided by modular functions established to facilitate RAM calculations.

6.1 FAILURE-RATE DATA

"Generic" data were the primary source of reliability data for this study. There are four broad categories of failure rate data. The best data come from the manufacturer of the equipment item. Here, the manufacturer follows a standard testing program such as that described in U.S. Military Standard 781 (MIL-STD-781). The next best source of data is generic data from publications such as ANSI/IEEE Std 500 or failure rates given in design handbooks. In these data, there are no distinctions between subtleties in design: neither the variation of reliability among different equipment manufacturers nor the variation due to different size, capacity, etc., is given. For example, these data bases give only a single failure rate for all the types and variations of dc electric motors. A third level of data is "like items." This data category is applied to developmental or unique items for which there is no operating experience. A similar item is used instead. An example of use of these data here is the optical absorption photometer, which is being developed by the Oak Ridge National Laboratory (ORNL). The light sensitive head of this device was assumed to have the same reliability as a scintillation detector. Finally, the last category of data is expert opinion. The accuracy of this data source is much maligned. Oftentimes, when surveys are carefully conducted, experts can project failure rates to within a factor of 2. In this study, expert opinion data were used to specify certain chemical characteristics.

Generic data often have a small range of values. The failure rate data for all modes of failure for dc electric motors used in this study, per 10^6 hours, were low, 1.0; medium, 1.7; high, 3.0; maximum, 4.0. Thus, only a factor of 4 separates the extremes of the data. The best estimate value used in this study was always the "high" value.

Generic data sometimes have a wide range of values. For example, the failure rates per 10^6 hours for copper electrical cable terminals were low, 0.0027; medium, 6.1; high, 30; maximum, 40. This broad range of data is interpreted as meaning that there is wide variation in quality of electrical terminals among various designs, manufacturers, etc. Therefore, the "high" value can be reduced by careful specification of design, choice of vendors, and quality control. (Note that electrical cables and terminals in reprocessing plant process cells are usually gold-plated to inhibit corrosion.)

The generic data bases utilized in this work were, in decreasing priority:

1. *The IEEE Guide to the Collection and Presentation of Electrical, Electronic, and Sensing Component Reliability Data for Nuclear Power Generating Stations,* ANSI/IEEE Std 500-1977.

2. A data base internal to the CFRP entitled *Component Failure Rate Data with Potential Applicability to the Hot Experimental Facility,* a compilation of relevant information from a variety of data bases.

3. H. A. Rothbart, *Mechanical Design and System Handbook,*McGraw-Hill, 1964.

Generic data are nearly always modified by an environmental factor to account for specific operating conditions. The generic failure rate is that determined for a pristine, controlled environment, such as rooms that house operating main-frame computers. Generic failure rates are increased to account for a less-than-ideal environment. Typically, there are environmental factors for temperature, humidity, radiation fields, etc. It is not unusual for these factors to range, individually, to a value of 3. The environmental factor that should be applied to account for a nuclear fuel reprocessing process cell is not known. This work assumed an environmental factor of 3 for most nonmechanical in-cell equipment and a value of 1 for all other equipment.

6.2 REPAIR TIME DATA

Mean-time-to-repair data was obtained by surveying experts (all with significant number of years of plant operation experience related to reprocessing) for their opinions concerning the time it would take to repair each of the basic event failures of the fault tree. If a consensus best estimate time could not be reached among the experts, repair times were averaged. The estimated mean time to repair included all the constituents of downtime, namely, fault detection time, fault diagnosis time, time spent in preparing to correct the fault, time spent actually repairing the fault, and repair verification time.

It is worth reiterating some assumptions of the study, which deal with the rate of failure and repair times.

1. This study considered only random failures. Thus, all equipment was considered to be "as good as new." All equipment was assumed to be replaced before its design life is reached. Further study is needed to establish the lifetime of equipment within the process cell.

2. This study assumed that the reprocessing plant utilizes a good preventive maintenance program. Preventive maintenance schedules are the result of the study recommended in Item 1.

3. This study assumed that spare parts were warehoused on-site for any failure in the process cell. This is a generous assumption and will certainly not be the case. A spare part inventory and logistics study should be conducted.

An evaluation of preventive maintenance policy and spare parts inventory is clearly beyond the scope of this study at this preconceptual stage of BRET design. It is recommended that such an assessment be conducted during detailed design.

7. CALCULATIONS

7.1 BASIC PREMISES AND EQUATIONS

Analyses of the fault tree given in Appendix B show that the items which can cause system failure (i.e., the minimal-cut-set of the fault tree) are all single, basic failure events. This characteristic is present even though there are a number of AND logic gates that require two or more events to cause a higher tier fault. (Recall from the discussion in Sect. 5 that a number of component-failure events occur at several places on the tree.) This minimal-cut-set characteristic greatly simplifies the quantification of the fault tree by making unavailability probabilities simply the sum of the probabilities of the individual basic failure events.

The unavailability ($\bar{a}$) of a repairable basic event i is approximated by

$$\bar{a}_i \approx \lambda_i \tau_i \tag{7.1}$$

where λ_i is the failure rate and τ_i is the mean time to repair for the event. High system availability and short repair times (relative to a reprocessing campaign's duration) are assumed in Eq. (7.1). Unavailability is defined as one minus the availability variable. The mean-time-between-failure variable is the inverse of the failure rate. An exponential failure density distribution is assumed; all failures are assumed to be randomly distributed. The unavailability of the top event of the cut set ($\bar{A}$) is

$$\bar{A} = \sum_{i=1}^{N} \bar{a}_i \tag{7.2}$$

because the minimal cut set for the fault tree is a sum of N single, basic events. The availability of the system is

$$A = 1 - \bar{A} \quad . \tag{7.3}$$

Another parameter of interest is the expected number of failures (ENF) of a component during a reprocessing campaign. The equation approximating this parameter is

$$\mathrm{enf}_i \approx \lambda_i t \tag{7.4}$$

where it is assumed that the unavailability, Eq. (7.1), of the component is small. The time interval t used in the calculation is the duration of a reprocessing campaign, 30 d. The ENF of the top event in the fault tree is

$$\mathrm{ENF} = \sum_{i=1}^{N} \mathrm{enf}_i \ . \tag{7.5}$$

7.2 WORKSHEETS

Table 7.1 gives an example worksheet used in making the calculations of this study. Appendix C gives a complete listing of the worksheets. Specific items of equipment are listed, and the location of that equipment item in the fault tree is given in the first column of Table 7.1. The generic failure rate datum for each equipment item is given in the second column, and the reference giving the source of each datum is given in the third column. The generic failure rate data are modified by an environmental factor, given in the fourth column, to account for the process cell environment. Part of the equipment is located in the radioactively hot process cell and some is not. Equipment susceptible to failure because of the process cell environment (principally electrical and electronic items) are assigned an environmental factor. The fifth column of the tables indicate whether the equipment is located in-cell (I) or out-of-cell (O). The sixth column gives the number of these equipment items per functional area. The generic failure rate is improved to an application failure rate, shown in column seven, by multiplying the second, fourth, and fifth columns together. The mean time to repair for a particular fault is shown in the eighth column. The unavailability due to the failure of a specific piece of equipment, given in the ninth column, is obtained by using Eq. (7.1); that is, by multiplying the seventh and eighth columns together. The expected number of failures per 30-d campaign, column ten, is obtained by employing Eq. (7.4), that is, by multiplying 720 h by the application failure rate.

Table 7.1. Example worksheet (individual centrifugal contactor)

	Location in fault tree	Failure rate ($1/10^6$ h)	Reference for failure rate	Environmental factor	Location (I=in-cell; O=out-of-cell)	Number	Application failure rate ($1/10^6$ h) λ_i	Mean time to repair (h) τ_i	Unavailability ($1/10^6$ h) $a_i=\lambda_i \tau_i$	Expected number of failures (1/30 d) $enf_i \simeq t\lambda_i$
Motor	E.1	5.0	3	3	I	1	15	9.6	144	0.0108
Bearing	E.2	3.5	2	3	I	1	10.5	9.6	100.8	0.00756
Coupling	E.4	0.049	5	1	I	1	0.05	16.8	0.8	0.000036
Power jumpers	E.3	24	3	3	I	1	72	4.8	345.6	0.05184
Housing welds	1.2.1.3.2&3									
	1.2.2.3.2&3	0.6	6	1	I	2	1.2	24	28.8	0.000864
	B.1	0.1	6	1	I	1	0.16	9.6	1.5	0.0001152
High level alarm fails high	1.2.1.1 1.2.2.1	8.2	3	3	I	1	24.6	4.8	118	0.0177120
Weir air pressure										
TRU remote connector	K.1.2	1.2	1	1	I	1	1.2	12	14.4	0.000864
Swagelok connector	K.1.1	1.6	1	1	I	1	1.6	12	19.2	0.001152
O-ring seal	K.1.3	0.2	7	3	I	1	0.6	7.2	0.4	0.000432
									773	0.091356

7.3 MASTER CHART

The tables of Appendix C list the equipment systems in a functional, modular fashion so that the detailed analysis of the extraction-scrub section of the HA solvent extraction cycle can be extrapolated, initially to the whole first (H) cycle, then to the other four cycles of the BRET. For example, note that Table C.1 lists those equipment items associated with an individual centrifugal contactor and that Table C.2 lists equipment associated with a bank of four centrifugal contactors. Thus, the characteristics of 16 stages of an extraction-scrub section can be calculated by completing Table C.1 and multiplying the results by four to have the results for a bank of four contactors; then, adding that result to Table C.2 (bank controls and cabling) to give the characteristics of a four-pack unit. Since there are four centrifugal contactor four-packs in the 16 extraction-scrub stages, these results are in turn multiplied by four. Tables C.3 through C.9 list the remaining support equipment systems that are used in the calculations in a similar manner.

Table 7.2 indicates how the availability is calculated for the entire H cycle. There are 28 centrifugal contactors, so the results of one four-pack unit (Table C.2) are multiplied by seven. There are two solvent extraction banks (one extraction-scrub bank and one stripping bank); therefore, the results of Table C.3 are multiplied by two. Likewise, there are three nonactive feed lines (Table C.4), one solvent feed line (Table C.5), one active aqueous feed line (Table C.6), and one set of computer controls (Table C.9). These products are summed to give the total results for the H cycle. The availabilities and expected number of failures for the remaining four cycles are calculated as shown in Table 7.2. The total results are determined according to Eqs. (7.2) and (7.5). In calculating the results for all five cycles, the contribution of the host computer given in Table C.9 is counted only once.

Table 7.2. Master table that enables extrapolation of results to all five cycles

	Number					
	4-pack units	SX banks	Nonact feeds	Solvent feeds	Active AQ feeds	Intercycle adjustment
H cycle extract-scrub,	4	1	2	1	1	
strip	3	1	1			
Total	7×(C.2)[a]	2×(C.3)	3×(C.4)	1×(C.5)	1×(C.6)	1×(C.9)
Partition cycle extract-scrub,	4	1	2	1		
strip	3	1	1			
Total	7×(C.2)	2×(C.3)	3×(C.4)	1×(C.5)		(C.7)+(C.9)
2nd U cycle extract-scrub,	4	1	2	1		
strip	3	1	1			
Total	7×(C.2)	2×(C.3)	3×(C.4)	1×(C.5)		(C.7)+(C.9)
2nd Pu cycle extract-scrub, strip						
Total	7×(C.2)	2×(C.3)	3×(C.4)	1×(C.5)		(C.8)+(C.9)
3rd Pu cycle extract-scrub, strip						
Total	7×(C.2)	2×(C.3)	3×(C.4)	1×(C.5)		(C.8)+(C.9)

[a]Items in parenthesis note table number in Appendix C.

8. DISCUSSION OF RESULTS

A systematic, detailed RAM assessment was made of the BRET preconceptually designed solvent extraction system. The preconceptual design stage is the proper one to initiate a RAM-type evaluation because the design is not frozen, and the RAM assessment can contribute to establishing equipment layout or configurations and to equipment development and testing programs. The indeterminate nature of the design at this stage necessarily limits the level of analysis detail. Once detailed design is complete, a more thorough assessment (e.g., a deeper evaluation of failure modes, equipment-specific failure rates, procurement specifications, spare parts inventory assessment) will be conducted. A deeper level of analysis is required for a system performing a critical function or one with a questionable reliability history. Thus, refinements will be made to this initial assessment as the design progresses, at progressively greater level of detail, in an iterative process.

8.1 QUALITATIVE CONSIDERATIONS

The detailed assessment consisted of an FMEA, construction of a fault tree and data collection that enabled a quantification of the analysis. Study of the completed FMEA allowed several qualitative conclusions to be drawn at an intermediate stage of the study: (1) rotating and cycling (active) components have huge failure rates but short repair times; (2) valves and other mechanical devices generally have lower failure rates but longer repair times; and (3) structures (passive components, such as support frames and containments) have the lowest failure rates and the longest repair times. No inconsistencies were found between maintenance and design concepts.

A qualitative examination of the fault tree indicates that a number of faults, and indeed branches, occur repeatedly across the tree. However, each basic event is considered only once in the "minimal" cut sets of the availability calculations. Components that appear frequently in the fault tree are clearly critical to the smooth operation of the system. These faults have the most widespread consequences should they fail. The following items fall into this category for the HA contactor bank:

1. the feed systems: HAF, scrub, and solvent;
2. weir air pressure;
3. instrument and power jumpers;
4. rotor speed control system; and
5. process control system.

Certain trends are apparent. There is substantial inclination to simplify in-cell equipment design and to remove, as much as possible, in-cell equipment to the less severe out-of-cell operating environment. It is apparent that even well-developed maintenance capabilities do not negate the need to locate equipment out-of-cell to minimize the radiation and corrosive atmosphere exposure to the equipment. Out-of-cell equipment is more accessible to humans and easier to repair. Most in-cell repairs require 8 h or more because repairs exceeded the current 3-h surge capability.

8.2 AVAILABILITY CALCULATIONS

Table 8.1 gives the calculated base case, preconceptual design availabilities for each of the five BRET solvent extraction cycles. These predicted availabilities are much less than the availability design goals. For example, the availability calculated for the H cycle is 0.931450 versus the design goal of 0.999648. Table 8.2 gives a prioritized list, beginning with the largest, of the contributors to downtime for the H cycle. The numbers in parentheses are the number of items in the cycle. The suggested means of reducing the incremental unavailability contribution of each item is given in the far right-hand column.

Table 8.1. The BRET solvent extraction system availability prediction[a]

Cycle	Calculated availability
H[b]	0.931450
Partition	0.937810
2nd U	0.937810
2nd Pu	0.937775
3rd Pu	0.937775

[a]Does not consider the presence of 3-h surge capacity between stages.
[b]Includes host computer.

Table 8.2. Availability critical items list for the HA cycle

Priority No.	Item	Unavailability contribution	Resolution
1	Cable terminals (51)[a]	0.0257	Quality
2	Cell-wall electrical penetrations (2)	0.00864	Reduce repair time
3	Host-computer programming	0.00576	Surge
4	Centrifugal pump	0.00504	Redundancy
5	Contactor motors (28)	0.00403	Dead stage operation
6	Contactor high-level alarm (28)	0.0033	Dead stage operation
7	Motor bearings (28)	0.0028	Dead stage operation
8	Metering pumps (6)	0.00216	Quality
9	Photometer	0.0017	Redundant
10	Fluidic pumps	0.00133	Improve design
11	Feed temperature control (6)	0.000864	Delete
12	Process control module programming	0.000768	Surge
13	Flow control	0.000604	Redundant
14	Host-computer hardware	0.000408	Surge
15	Valves	0.000333	

[a]Numbers in parentheses are the quantity of items.

8.3 SYSTEM DESIGN IMPROVEMENTS

Table 2.2 lists improvements in system availability that result from product specification control, design changes, and component development and testing programs. The expected number of plant shutdowns per campaign is also given to assist in interpreting the calculated availabilities. The expected number of failures is not as unequivocal a parameter for specifying plant performance as is availability. The base case prediction indicates a frequent 7.1 failures per campaign. Not given by the expected number of failures parameter, but present in the availability parameter, is the fact that the repair time is short in the base case calculation. Conversely, the design improvement composite indicates a very low failure rate of 0.0012 per campaign. Associated with this low number of failures is a long repair time for the pertinent faults. Thus, the improvement in the expected number of failures of the composite design is not reflected on a one-for-one basis with improvement in availability. Nevertheless, the expected number of failures is a useful variable for broadly interpreting the impact of design changes.

8.3.1 Electrical Cable Terminals

The single type of equipment that contributes most to plant downtime is electrical cable connectors (Table 8.2). Although in-cell failure rates are fairly low on a per terminal basis (90 failures per million hours), the cables are made and broken many times between

their end use and control locations. There is a four-order-of-magnitude range in connector failure rate data from low to maximum values due to variations among manufacturers and designs. A factor-of-one-hundred improvement in electrical connector reliability over the high value used in this assessment will significantly improve the solvent extraction system reliability. As shown in Table 2.2, higher quality connectors, skillfully installed and meticulously inspected, must be a priority. Mean-time-between-failure data and the environment in which cable terminals will be utilized are paramount considerations in the selection and procurement of electrical terminals in the BRET.

8.3.2 Surge Capacity

The design change that has the largest impact on solvent extraction system availability is the quadrupling of the intercycle surge capacity. Table 2.2 shows the effects on system availability in going from zero surge capacity (base case) to a 3-h surge capacity (present design) to a 12-h surge capacity (recommended design). The number of failures that shut the plant down is reduced by a factor of 27 between base case and recommended design conditions. The inclusion of larger intercycle surge tanks will consume more in-cell space but should not overshadow the single most important improvement, which will enable the solvent extraction system to achieve its availability goal. Presently, intercycle surge tanks range between 44 and 65 gal in capacity; quadrupling of this capacity is recommended.

Since the magnitude of surge capacity and its placement is such an important parameter in achieving an overall plant availability goal, a separate "BRET surge-capacity study" will follow this work.

8.3.3 Weir Air Pressure

Functional capabilities will determine whether weir air pressure is needed to control the interfacial dispersion based in the BRET centrifugal contactors. Conventional wisdom is that such a major simplification of the design (there is less that can go wrong) would improve system availability, and this is the case. The H-cycle availability, should weir air pressure control be deleted, is 0.934093, and the expected number of plant shutdowns due to failure in the H cycle becomes 6.93.

8.3.4 Temperature Baths

Considerable effort was expended to assess the necessity of surrounding the contactor stages with circulating water for temperature control. This question was not resolved in this study. Again, functional considerations will dictate whether it is necessary to control process liquid temperatures precisely. Obviously, a major simplification such as permitting process stream temperatures to vary as the process cell temperature varies will improve system reliability. The H cycle availability and expected number of failures when the temperature baths are deleted become 0.932869 and 6.93 respectively.

8.3.5 Equipment Redundancy

The classical method of increasing system availability is to provide for redundancy in key failure prone equipment. Reprocessing is basically a simple operation. By assuring that the essential features of the process are highly reliable (and by letting support equipment be less reliable because of cost considerations) utilizing the principle of redundancy, the plant is optimized, and progress is made toward achieving this availability goal. This study recommends that redundancy be considered only for (1) the centrifugal pump that supplies the process solutions, (2) the photometer that measures the heavy-metal concentration in the product stream, and (3) the flow control valves. Table 2.2 shows the resultant gains in availability when these equipment items are redundant.

8.3.6 The Capability of Operating with a Dead Stage

If a bank of centrifugal contactors could continue satisfactory operation with one of its stages in a dead state (i.e., nonrotating), there would be partial redundancy for the system of centrifuges, and the reliability of the bank of contactors itself would improve by orders of magnitude. The probability of two or more contactors failing during a 30-d reprocessing campaign is much less than that of one contactor failing. Critical items that control solvent extraction plant availability then become the ancillary, supporting components to the solvent extraction equipment.

The present design of the BRET centrifugal solvent extraction contactors is such that should a drive motor stop, the entire bank of contactors must be shut down. If flow to the bank continues, the liquid level in the dead stage will rise due to aqueous and organic streams feeding to that stage from adjacent stages. The level will continue to rise until it reaches the organic collector ring. Simultaneously, the liquid in the dead stage (stage N in Fig. 8.1) will back up in the feed lines from the adjacent stages ($A_{N\text{-}1}$ and O_{N+1}). The first to be affected will be the organic line (O_{N+1}) from the adjacent stage and its organic collector ring in stage $N+1$, which is at the same elevation as the collector ring of the dead stage N. Assuming that the aqueous-organic interface has risen above the feed point in the dead stage, the organic phase will flow as intended to the adjacent stage (ON), but the aqueous phase would attempt to flow up the organic feed line (O_{N+1}). As the interface rises, this line will become blocked with aqueous phase, rejecting the organic from $N+1$ and eventually flooding all stages below the dead stage (to the right on the figure).

The procedure for replacing a failed motor will include an initial step where all active solution in the contactor is removed by flushing with a clean aqueous solution, such as scrub solution. Flushing the system with aqueous solution could be achieved by allowing the aqueous phase to overflow into the organic collector ring of the dead stage (N) and also to flow back through the organic line O_{N+1}. However, the organic inventory in the contactor bank below the dead stage (to the right) would be trapped in that region. This organic inventory could be flushed from the system only by the addition of a line to introduce aqueous phase into the organic feed end of the contactor bank.

A design modification is proposed, which, it is hoped, will allow for continued operation with one inoperative (i.e., nonrotating) stage. This modification involves the addition of horizontal overflow ports below the organic collector rings and above the feed points.

ORNL–DWG 84-11766

SCHEMATIC DIAGRAM OF CENTRIFUGAL CONTACTOR CONNECTIONS

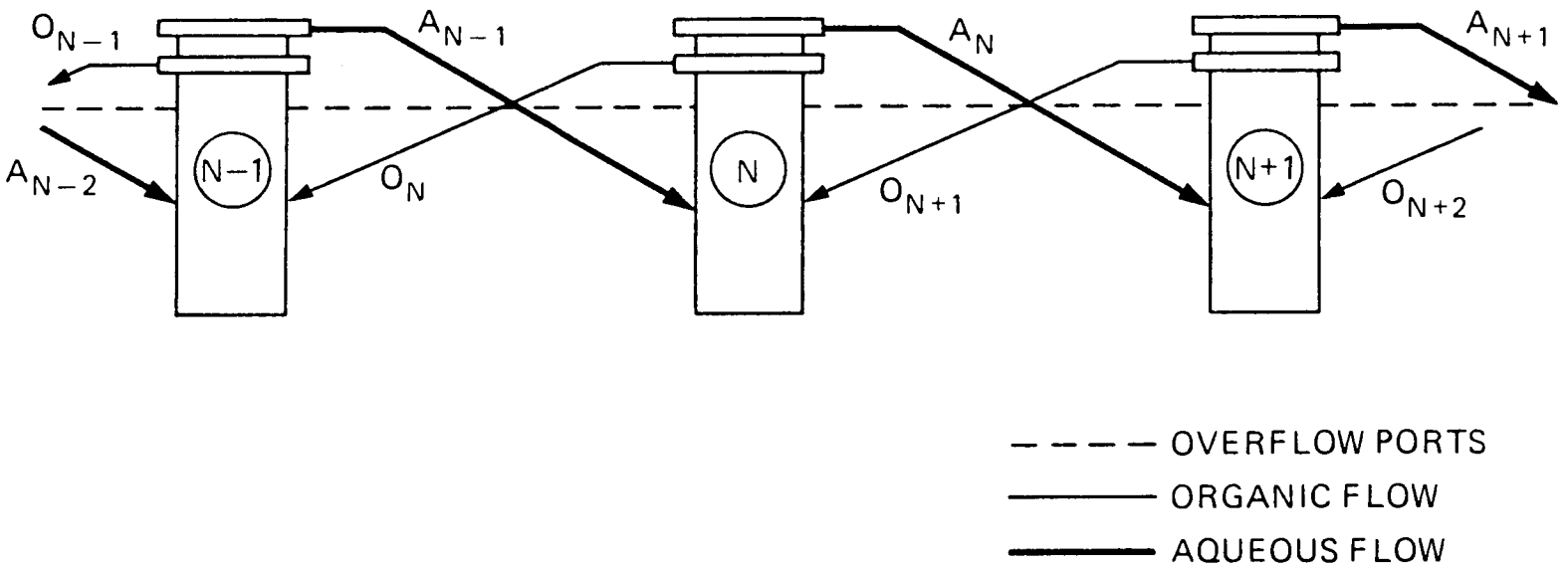

Fig. 8.1. Schematic diagram of centrifugal contactor connections.

These ports would permit overflow of both aqueous and organic phases into the adjacent stages. The stream would be two-phased and would allow complete flushing of the organic inventory from the system since the organic/aqueous interface would occur at the elevation of the overflow ports.

Initially, the overflow through these ports (assuming a motor failure during a run) would be 100% organic phase since there would be an organic layer of finite thickness above the rising aqueous phase. Once the organic layer is displaced, the overflow would consist of aqueous and organic in the same proportion as the feed streams to the stage. It is believed that equal volumes would flow to each adjacent stage with the phase ratio in each being equal to that entering the dead stage.

A number of MATEX computer code calculations were made to evaluate the effect of a dead stage on the HA solvent extraction bank. The studies were conducted assuming that 50% of the exiting streams from a given stage were flowing in the opposite direction from the normal flow path as described above. The first part of the study examined the effects of the location of the dead stage on the organic and aqueous product stream compositions (HAP and HAW) in terms of heavy-metal content and fission products, assuming that feed-stream flows to the contactor bank remained constant. With the exception of the case where the dead stage occurred at the end of the contactor bank, no significant changes in heavy-metal losses were observed.

During the second part of the study, additional computer runs were made by holding the heavy metal losses to a set value and varying the organic rate. It was indicated that a total organic rate variation of <2% was required to maintain the desired extraction efficiency with one failed motor.

The fission-product behavior is somewhat more complex than that of the heavy metals. The behavior of fission products modeled by MATEX is poor, at best, but when used in a comparative mode rather than in a search for exact numbers, it may provide a fair indication of trends. By disregarding the occurrence of a dead stage at either end, only the distribution of ruthenium (Ru) and neptunium (IV) [Np(IV)] is affected by the location of the dead stage. In general, for Np(IV) no effect is seen if the dead stage occurs in the portion of the contactor bank closest to the organic product (HAP). The amount of Np(IV) reporting to the HAP decreases as the dead stage is moved toward the feed stage. As the uranium losses increase, the amounts of Np(IV) and Np(VI) in the HAW increase rapidly.

This study recommends that test centrifugal contactors be fabricated with extra overflow ports and that the contactors be configured in a bank of units. This bank should be tested for operation with one dead stage.

8.3.7 Composite Improvements

Table 2.2 indicates that no single design improvement increases the H cycle predicted availability to nearly reach its availability goal. A composite of the recommended design improvements listed in Table 2.2, however, gives a predicted system availability (0.99298) approaching that goal (0.999648). It is worth noting that the new critical items list for the composite design are (1) centrifugal contactor motor speed controls and (2) the constant volume feed motor speed control. Both type motor controls are located out of the process cell.

8.4 FURTHER WORK

8.4.1 Host Computer and Cell-Wall Penetrations

The host computer and cell-wall penetrations were deleted from this study in the process of concentrating attention on the equipment specifically related to the solvent extraction plant. The process control module (that computer dedicated to the solvent extraction function) was retained in all analyses. Two cell-wall penetrations were assumed for each cycle, one penetration for electrical power leads and one for instrumentation and control leads. It should be noted that, although the penetrations themselves have a low failure rate, their high contribution to unavailability is due to a long mean time to repair (3 d). The host computer and cell-wall penetrations are common to most process cell functional areas. They are assigned their own category and availability goals. The composite design improvements (technical fixes) recommended in Sect. 8.3.7 do not lessen the unavailability contribution of the host computer and cell wall penetrations. These systems will be the subject of separate RAM assessments.

8.4.2 Feed Makeup Systems

Incorrect feed composition is an undeveloped event that appears throughout the fault tree. It was emphasized repeatedly throughout the study as one of the major parameters that, in practice, causes solvent extraction systems to fail to meet specifications. This should be the subject of a separate RAM analysis, as should the solvent recovery system.

8.4.3 The Importance of Maintenance Equipment

The total downtime for in-cell equipment for the five solvent extraction cycles was calculated to be 6.7 d/30-d reprocessing campaign. This emphasizes the importance of the advanced servomanipulators maintenance equipment. This equipment must be at hand not only when needed by the solvent extraction system, but also when needed by support systems, waste systems, and head-end systems. The manipulators will be a critical system in the performance of emergency repairs that require correction within a set time period (i.e., the duration of the surge capacity) if the plant is not to suffer poor availability.

REFERENCE

1. M. J. Haire, J. G. Maltese, and R. G. Sohmer, "A System Availability Top-Down Apportionment Method," Annual Reliability and Maintainability Symposium, Philadelphia, January 1985.

Appendix A

FAILURE MODES AND EFFECTS ANALYSIS WORKSHEETS

This appendix gives a complete listing of the FMEA worksheets of the study. The FMEA analysis began with a parts list for the system. Then, the mode of failure and the effect of failure of each item on the list was tabulated on these worksheets. The significant failure modes (those events falling within the shaded areas of Fig. 4.1) became the basic events in the fault tree logic model. Thus, the failure of every part in the system was considered, although detailed evaluations were made on only those that had a significant impact on system performance.

FAILURE MODE AND EFFECTS ANALYSIS/SINGLE FAILURE POINT SUMMARY

SYSTEM SOLVENT EXTRACTION PREPARED BY M.S. GRADY DATE MARCH, 1984

SUBSYSTEM HA CONTACTOR BANK RELIABILITY REVIEW _____ DATE _____

PAGE ___ OF ___

ITEM NAME/FUNCTION	FAILURE MODES	FAILURE CAUSES	FAILURE EFFECTS	FAILURE DETECTION	IMPORT-ANCE	CORRECTIVE ACTION REQUIRED	REPAIR TIME
8 PACK STRUCTURAL FRAME OR RAFT	MECHANICAL FAILURE OF A MAJOR PART OF THE FRAME VIBRATION COLLAPSE	WELD FAILURE BOLT LOOSENS OR FAILS	VIBRATION SHUT DOWN OF BANK COLLAPSE TERMINATE CAMPAIGN; LIQUOR SPILLAGE	VIBRATION MONITOR VISUAL	L4	REPLACE STRUCTURE	90 DAYS
VIBRATION MONITOR	LOSS OF SENSITIVITY ERRONEOUS ALARM	NO VIBRATION MONITORING UNABLE TO DETECT ANY IMMINENT CONTACTOR	FAILURE		L2 M1	REPLACE MONITOR	

FAILURE MODE AND EFFECTS ANALYSIS/SINGLE FAILURE POINT SUMMARY

SYSTEM SOLVENT EXTRACTION

SUBSYSTEM HA CONTACTOR BANK HOUSINGS & PIPEWORK

PREPARED BY M.S. GRADY **DATE** MARCH, 1984

RELIABILITY REVIEW _____ **DATE** _____

PAGE ___ **OF** ___

ITEM NAME/FUNCTION	FAILURE MODES	FAILURE CAUSES	FAILURE EFFECTS	FAILURE DETECTION	IMPORT-ANCE	CORRECTIVE ACTION REQUIRED	REPAIR TIME
ROTOR HOUSING INTERCONNECTING PIPEWORK BETWEEN CONTACTORS	LOSS OF PRIMARY CONTAINMENT –TO CELL –BETWEEN PHASES ALSO: BLOCKAGE	CORROSION WELD FAILS MECHANICAL FAILURE –VIBRATION –THERMAL FATIGUE PRESSURE AND ACCUMU-LATION OF SOLIDS	LOSS OF AQUEOUS OR ORGANIC PHASE TO CELL REDUCED MASS TRANSFER EFFICIENCY FOR BANK	PROCESS MEASURE-MENTS PURGE AIR INSTRUMENTS	M4	REPLACE CONTACTOR PATCH	½-2 DAYS
O-RING SEAL BETWEEN MOTOR SUPPORT AND SUPPORT BRACKET	LOSS OF MECHANICAL PROPERTIES PHYSICAL DAMAGE	IRRADIA-TIONAL CHEMICAL DEGRADATION INCORRECT INSTALLATION	ACID AND SOLVENT VAPORS MAY ESCAPE TO CELL		M1	REPLACEMENT AT NEXT MOTOR CHANGE	
HIGH LEVEL ALARM	NO ALARM ERRONEOUS ALARM	LOSS OF SENSITIVITY CONDENSATION OPTICAL FIBRE JUMPER FAILS/ DISCONNECTED	BOTTOM BEARING OF MOTOR IN ACID/SOLVENT FAILS BARRIER SHUT DOWN	FROM EFFECT	M2/3	REPAIR OR RESET ALARM	8–12 HOURS

FAILURE MODE AND EFFECTS ANALYSIS/SINGLE FAILURE POINT SUMMARY

SYSTEM SOLVENT EXTRACTION

SUBSYSTEM HA CONTACTOR BANK HOUSING & PIPEWORK

PREPARED BY M. S. GRADY DATE MARCH, 1984

RELIABILITY REVIEW _____ DATE _____

PAGE ___ OF ___

ITEM NAME/FUNCTION	FAILURE MODES	FAILURE CAUSES	FAILURE EFFECTS	FAILURE DETECTION	IMPORT-ANCE	CORRECTIVE ACTION REQUIRED	REPAIR TIME
REMOTE CONNECTOR	LEAK	VIBRATION	LOSS OF PROCESS FLUIDS TO CELL	FLOW INSTRUMENTS	M3		

FAILURE MODE AND EFFECTS ANALYSIS/SINGLE FAILURE POINT SUMMARY

SYSTEM SOLVENT EXTRACTION

SUBSYSTEM HA CONTACTOR BANK
MOTOR & ROTOR

PREPARED BY M.S. GRADY DATE MARCH, 1984

RELIABILITY REVIEW _____ DATE _____

PAGE ___ OF ___

ITEM NAME/FUNCTION	FAILURE MODES	FAILURE CAUSES	FAILURE EFFECTS	FAILURE DETECTION	IMPORT-ANCE	CORRECTIVE ACTION REQUIRED	REPAIR TIME
ROTOR: SEPARATING ZONE & WEIRS	WEIR BLOCKAGE	PRESENCE OF SOLIDS & ACCUMULATION AT WEIR	HYDRAULIC PERFORMANCE OF CONTACTOR IMPAIRED HIGH ENTRAINMENT LEVELS LEAD TO REDUCED MASS TRANSFER EFFICIENCY AND OFF-SPEC PRODUCT STREAMS	PROCESS INSTRUMENTS	M2	REPLACEMENT OF ROTOR CLEAN UP OF ROTOR FOR REPLACEMENT	8–12 HOURS
MOTOR	LOSS OF DRIVE, ROTOR STOPS OR SLOWS	BEARING FAILURE EXCESSIVE VIBRATION WINDING FAILURE	CONTACTOR BANK SHUTS DOWN OR OPERATED AT REDUCED MASS TRANSFER EFFICIENCY	VIBRATION MONITOR SPEED MONITOR PROCESS INSTRUMENTS	H2	IMMEDIATE REPLACEMENT	8 HOURS
	SHAFT CONNECTION BROKEN	ROTOR SLOWS OR STOPS CORROSION VIBRATION MECHANICAL FAILURE OF LOCKNUT	REDUCED MASS TRANSFER EFFICIENCY BANK SHUTS DOWN	SPEED MONITOR PROCESS INSTRUMENTS	M3	TIGHTEN LOCK-NUT REPLACE DRAW BAR	16 HOURS

FAILURE MODE AND EFFECTS ANALYSIS/SINGLE FAILURE POINT SUMMARY

SYSTEM SOLVENT EXTRACTION

SUBSYSTEM HA CONTACTOR BANK
MOTOR & ROTOR

PREPARED BY M. S. GRADY DATE MARCH, 1984

RELIABILITY REVIEW _____ DATE _____

PAGE ___ OF ___

ITEM NAME/FUNCTION	FAILURE MODES	FAILURE CAUSES	FAILURE EFFECTS	FAILURE DETECTION	IMPORT-ANCE	CORRECTIVE ACTION REQUIRED	REPAIR TIME
O–RING SEAL (WEIR AIR PRESSURE SUPPLY CAP)	LOSS OF MECHANICAL PROPERTIES PHYSICAL DAMAGE	IRRADIATIONAL CHEMICAL DEGRADATION INCORRECT INSTALLATION	LOSS OF WEIR AIR PRESSURE –FLOW ALONG WEIR AIR PRESSURE SUPPLY LINE CLOSES BANK DOWN PERTRUBATION IN CONTACTOR HYDRAULICS MAY PRODUCE SMALL QUANTITY OF OFF–SPEC. PRODUCT	WEIR AIR PRESSURE INSTRUMENTS	M2	REPLACE O–RING IMMEDIATELY	8 HOURS
MOTOR SPEED	CONTACTOR RUN AT INCORRECT SPEED	SENSOR FAILS A–D CONVERTER D–A CONVERTER COMPUTER CONTROL JUMPER CONNECTION ON/OFF	HYDRAULIC PERFORMANCE MAY BE IMPAIRED –OFF–SPEC PRODUCT AND SHUT DOWN	PROCESS INSTRUMENTS	M3	REPLACE SENSOR REPLACE A–D OR D–A CONVERTER RESET COMPUTER REPLACE/ RECONNECT JUMPER REPLACE ON/OFF SWITCH	2 DAYS

FAILURE MODE AND EFFECTS ANALYSIS/SINGLE FAILURE POINT SUMMARY

SYSTEM SOLVENT EXTRACTION

SUBSYSTEM HA CONTACTOR BANK MOTOR & ROTOR

PREPARED BY M. S. GRADY DATE MARCH, 1984

RELIABILITY REVIEW _____ DATE _____

PAGE ___ OF ___

ITEM NAME/FUNCTION	FAILURE MODES	FAILURE CAUSES	FAILURE EFFECTS	FAILURE DETECTION	IMPORT-ANCE	CORRECTIVE ACTION REQUIRED	REPAIR TIME
STAGE SPEED INDICATOR	INCORRECT READING	NO DIRECT IMPACT ON OPERATION	LESS INFORMATION TO OPERATORS		M1	REPLACE OR REPAIR	

FAILURE MODE AND EFFECTS ANALYSIS/SINGLE FAILURE POINT SUMMARY

SYSTEM SOLVENT EXTRACTION

SUBSYSTEM HA CONTACTOR BANK
SERV'CE PIPEWORK

PREPARED BY M. S. GRADY DATE MARCH, 1984

RELIABILITY REVIEW _____ DATE _____

PAGE ___ OF ___

ITEM NAME/FUNCTION	FAILURE MODES	FAILURE CAUSES	FAILURE EFFECTS	FAILURE DETECTION	IMPORT-ANCE	CORRECTIVE ACTION REQUIRED	REPAIR TIME
OFF–GAS MANIFOLD	LEAK BLOCKAGE	CORROSION MECHANICAL DAMAGE SOLIDS PRESENT SWAGELOK FITTING FAILS	LEAK OF ACID AND SOLVENT FUMES FROM CELL PURGE AIR DOESN'T VENT REDUCED PURGE FLOW AND LESS EFFECTIVE BEARING PROTECTION	OFF–GAS INSTRUMENTS PURGE AIR INSTRUMENTS	L1	REMOVE AND FLUSH DOWN AT NEXT SHUT DOWN TIGHTEN FITTING REPLACE AT NEXT SHUT DOWN	
PURGE AIR MANIFOLD	LOSS OF FLOW LEAK PLUG CONTROL	CONTROL CORROSION SOLIDS ACCUMULATE SWAGELOK FITTING FAILS	LESS EFFECTIVE BEARING PROTECTION	FLOWMETER	L1	"	
WEIR AIR PRESSURE	LOSS OF PRESSURE LEAK BLOCKAGE	CORROSION SOLIDS ACCUMULATE SWAGELOK FITTING FAILS	HYDRAULIC PERFORMANCE OF CONTACTORS IMPAIRED OFF–SPEC. PRODUCT AUTOMATIC SHUTDOWN FOR SOME MODES	WEIR AIR PRESSURE INSTRUMENTS PROCESS INSTRUMENTS	M3	" BUT IMMEDIATELY	16-24 HOURS

FAILURE MODE AND EFFECTS ANALYSIS/SINGLE FAILURE POINT SUMMARY

SYSTEM SOLVENT EXTRACTION

SUBSYSTEM HA CONTACTOR BANK
SERVICE PIPEWORK

PREPARED BY M. S. GRADY **DATE** MARCH, 1984

RELIABILITY REVIEW _____ **DATE** _____

PAGE ___ **OF** ___

ITEM NAME/FUNCTION	FAILURE MODES	FAILURE CAUSES	FAILURE EFFECTS	FAILURE DETECTION	IMPORT-ANCE	CORRECTIVE ACTION REQUIRED	REPAIR TIME
WEIR AIR PRESSURE REGULATOR	CONTROLS TO INCORRECT PRESSURE	PRESSURE SENSOR CONTROL LOOP VALVE	IMPAIRED HYDRAULIC PERFORMANCE OFF SPEC PRODUCT HIGH PRESS FLOWRATE IN AIR LINES SHUT DOWN BANK	PROCESS INSTRUMENTS WEIR AIR FLOWMETER	M2	REPLACE VALVE RESET COMPUTER	2–4 HOURS
HEATING/ COOLING WATER SYSTEM	BANK KEPT AT INCORRECT TEMPERATURE	LEAK IN PIPEWORK/ HEAT EXCHANGERS WATER TEMPERATURE INCORRECT	LOW FISSION PRODUCT DFs AND U, Pu STAGE EFFICEINCIES	TEMPERATURE MEASUREMENTS	L4		
HEAT/COOLING WATER 3–WAY CONTROL VALVE/ MIXER	INCORRECT HOT/COLD MIX GIVES WRONG HEAT EXCHANGER TEMPERATURE	VALVE FAILS	LOW FISSION PRODUCE DFs AND U, Pu STAGE EFFICIENCIES	TEMPERATURE MEASUREMENTS	M2	REPLACE VALVE	8 HOURS

FAILURE MODE AND EFFECTS ANALYSIS/SINGLE FAILURE POINT SUMMARY

SYSTEM SOLVENT EXTRACTION **PREPARED BY** M. S. GRADY **DATE** MARCH 1984

SUBSYSTEM HA CONTACTOR BANK SERVICE PIPEWORK **RELIABILITY REVIEW** _____ **DATE** _____

PAGE ___ **OF** ___

ITEM NAME/FUNCTION	FAILURE MODES	FAILURE CAUSES	FAILURE EFFECTS	FAILURE DETECTION	IMPORTANCE	CORRECTIVE ACTION REQUIRED	REPAIR TIME
HAF/HAX FEED TEMPERATURE (THERMOCOUPLE OR RESISTANCE THERMOMETER)	INCORRECT TEMPERATURE READING NO READING	JUMPER MALFUNCTION TEMPERATURE SENSOR TRANSMITTER	BANK RUN AT INCORRECT TEMPERATURE. COULD LEAD TO SHUTDOWN BY PROCESS CONTROL SYSTEM.	PROCESS INSTRUMENTS	M1	REPLACE SENSOR/ JUMPER TRANSMITTER.	
PURGE AIR FLOW MEASUREMENT (OUT OF CELL)	INCORRECT READING NO READING	JUMPER MALFUNCTION SENSOR TRANSMITTER	LACK OF PROTECTION FOR BEARING MAY RESULT. SEEN LATER AS REDUCED BEARING/DRAWBAR/SPINDLE LIFE	UPSTREAM AIR INSTRUMENTS	M1		
WEIR AIR SUPPLY FLOW ORIFICE	INCORRECT FLOW READING	TRANSMITTER OR INDICATOR FAILS OR GIVES ERRONEOUS READING	LESS INFORMATION. NO OPERATOR.		M1	RECALIBRATE OR REPLACE	

FAILURE MODE AND EFFECTS ANALYSIS/SINGLE FAILURE POINT SUMMARY

SYSTEM SOLVENT EXTRACTION

SUBSYSTEM HA CONTACTOR BANK
HAF SYSTEM

PREPARED BY M. S. GRADY DATE MARCH, 1984

RELIABILITY REVIEW _____ DATE _____

PAGE ___ OF ___

ITEM NAME/FUNCTION	FAILURE	FAILURE CAUSES	FAILURE EFFECTS	FAILURE DETECTION	IMPORT-ANCE	CORRECTIVE ACTION REQUIRED	REPAIR TIME
CONSTANT VOLUME FEEDERS	MOTOR SLOWS OR STOPS LOSS OF CALIBRATION	MOTOR FAILURE CONTROL ERROR JUMPER DISCONNECTED –ELECTRICAL –INSTRUMENT ACCUMULATION OF SOLIDS	NO HAF CONTACTOR BANK SHUT DOWN	CVF INSTRUMENTS –SPEED –FLOW PROCESS INSTRUMENTS	H2/3	REPLACE MOTOR IMMEDIATELY REPAIR/RESET CONTROL SYSTEM RECONNECT OR REPLACE RELEVANT JUMPER FLUSH DOWN	8–16 HOURS
FLUIDIC PUMP TO HAF HEADER	BLOCKAGE INCORRECT PULSING	PRECIPITATION OF SOLIDS; CORROSION PRODUCTS CONTROLLER FAILS AIR VALVE FAILS	NO HAF UNCERTAIN OR NO HAF	PROCESS INSTRUMENTS	L M2	FLUSH DOWN OR REPLACE REPAIR/RESET CONTACTOR OR VALVE	4–8 HOURS
POLISHING CENTRIFUGE	TURBINE BEARING FAILS ROTOR SLOWS; NO CLARIFICATION OF FIELD; NO OUTLET FLOW	BEARING FAILS DRAG BUSH FAILS SPEED SENSOR FAILS	HAF NOT CLARIFIED INCORRECT SPEED CONTROL	SPEED SENSOR PRESSURE INSTRUMENTS	H2 M2	REINSTALL AIR SUPPLY REPLACE TURBINE REPLACE BOWL & BUSH ASSEMBLY REPLACE SPEED SENSOR	4HOURS 4–8 HOURS

FAILURE MODE AND EFFECTS ANALYSIS/SINGLE FAILURE POINT SUMMARY

SYSTEM SOLVENT EXTRACTION

SUBSYSTEM HA CONTACTOR BANK
HAX SYSTEM

PREPARED BY M. S. GRADY DATE MARCH, 1984

RELIABILITY REVIEW _____ DATE _____

PAGE ___ OF ___

ITEM NAME/FUNCTION	FAILURE	FAILURE CAUSES	FAILURE EFFECTS	FAILURE DETECTION	IMPORT-ANCE	CORRECTIVE ACTION REQUIRED	REPAIR TIME
SOLVENT FEED PUMP (CENTRIFUGAL)	SLOWS OR STOPS	BEARING FAILURE MOTOR FAILURE SEIZURE	NO HAX, BANK SHUTS DOWN	FLOW INSTRUMENTS	H2	PUMP OR MOTOR REPLACEMENT	16–24 HOURS
SOLVENT FILTER	BLINDS	EXCESSIVE SOLIDS	LOW OR ZERO HAX	FLOW INSTRUMENTS	M2	REPLACE IMMEDIATELY	< 8 HOURS
HAX FLOW CONTROL	SOLVENT FLOW TO BANK TOO HIGH OR LOW	FAILURE OF ANY OF: FC 536-1 FC 536-2 FC 536-3 FC 536-4 Pc 536-1 AND LOCAL CONTROL LOOPS COMPUTER ERROR FROM PROCESS INSTRUMENTS	MASS TRANSFER PERFORMANCE IMPAIRED OFF–SPEC PRODUCT MAY LEAD TO BANK SHUT DOWN	PROCESS INSTRUMENTS	M2	REPLACE VALVE	< 8 HOURS

FAILURE MODE AND EFFECTS ANALYSIS/SINGLE FAILURE POINT SUMMARY

SYSTEM SOLVENT EXTRACTION

SUBSYSTEM HA CONTACTOR BANK
SCRUB SYSTEMS

PREPARED BY M. S. GRADY DATE MARCH, 1984

RELIABILITY REVIEW _____ DATE _____

PAGE ___ OF ___

ITEM NAME/FUNCTION	FAILURE	FAILURE CAUSES	FAILURE EFFECTS	FAILURE DETECTION	IMPORT-ANCE	CORRECTIVE ACTION REQUIRED	REPAIR TIME
METERING PUMP	INCORRECT FLOWRATE DELIVERED	MOTOR FAILURE JUMPER FAILURE INSTRUMENT ERROR SOLIDS ACCUMULATE IN PUMP	REDUCED FISSION PRODUCT DFs MAY BE SEVERE ENOUGH TO SHUT BANK DOWN	PROCESS INSTRUMENTS	H2	MOTOR/PUMP REPLACEMENT JUMPER RECONNECTION WASHDOWN OF PUMP	16–24 HOURS

FAILURE MODE AND EFFECTS ANALYSIS/SINGLE FAILURE POINT SUMMARY

SYSTEM SOLVENT EXTRACTION

SUBSYSTEM HA CONTACTOR BANK
PROCESS INSTRUMENTS

PREPARED BY M.S. GRADY DATE MARCH, 1984

RELIABILITY REVIEW _____ DATE _____

PAGE ___ OF ___

ITEM NAME/FUNCTION	FAILURE	FAILURE CAUSES	FAILURE EFFECTS	FAILURE DETECTION	IMPORT-ANCE	CORRECTIVE ACTION REQUIRED	REPAIR TIME
U/Pu PHOTOMETER ON HAP LINE	INCORRECT READING NO READING	NO FLUID RECIRCULATION VIEWING OBSCURED BY PRECIPITATES OPTICAL FIBRE FAILS PHOTOMETERS PHOTOMULTIPLIER FAILS	ARBITRARY PROCESS CONTROL –OFF-SPEC PRODUCTS AND BANK SHUT DOWN	ANALYSIS OF CONTROL SYSTEM RESPONSE SURGE TANK INSTRUMENTATION	H2	REPLACE OPTICAL FIBRE	8–16 HOURS
HAP GAMMA ACTIVITY MONITOR					M1		8–12 HOURS
BANK TEMPERATURE CONTROL	INCORRECT READING WRONG TEMPERATURE IN BANK	FAILURE OR LOSS OF CALIBRATION –SENSOR –TRANSMITTER –INDICATOR	LESS INFORMATION TO OPERATOR	COMPARISON WITH FEED HEATING CONDITIONS	M1		

FAILURE MODE AND EFFECTS ANALYSIS/SINGLE FAILURE POINT SUMMARY

SYSTEM SOLVENT EXTRACTION

SUBSYSTEM HA CONTACTOR BANK
PROCESS INSTRUMENTS

PREPARED BY M. S. GRADY DATE MARCH, 1984

RELIABILITY REVIEW _____ DATE _____

PAGE ___ OF ___

ITEM NAME/FUNCTION	FAILURE	FAILURE CAUSES	FAILURE EFFECTS	FAILURE DETECTION	IMPORT-ANCE	CORRECTIVE ACTION REQUIRED	REPAIR TIME
FEED TEMPERATURE CONTROLS	INCORRECT TEMPERATURE	FAILED: ON/OFF VALVE TEMPERATURE SENSOR FLOW CONTROL VALVE	DEGRADATION OF CHEMICAL PERFORMANCE OF BANK –Pu IN RAFFS –FP IN PRODUCT	ON–LINE PROCESS MONITORS	M2		

FAILURE MODE AND EFFECTS ANALYSIS/SINGLE FAILURE POINT SUMMARY

SYSTEM SOLVENT EXTRACTION

SUBSYSTEM HA CONTACTOR BANK
SERVICE PIPEWORK

PREPARED BY M.S. GRADY DATE MARCH, 1984

RELIABILITY REVIEW _____ DATE _____

PAGE ___ OF ___

ITEM NAME/FUNCTION	FAILURE MODES	FAILURE CAUSES	FAILURE EFFECTS	FAILURE DETECTION	IMPORT-ANCE	CORRECTIVE ACTION REQUIRED	REPAIR TIME
HAF/HAX FEED TEMPERATURE (THERMOCOUPLE OR RESISTANCE THERMOMETER)	INCORRECT TEMPERATURE READING NO READING	JUMPER MALFUNCTION TEMPERATURE SENSOR TRANSMITTER	BANK RUN AT INCORRECT TEMPERATURE COULD LEAD TO SHUTDOWN BY PROCESS CONTROLL SYSTEM	PROCESS INSTRUMENTS	M1	REPLACE SENSOR/ JUMPER/ TRANSMITTER	
PURGE AIR FLOW MEASUREMENT (OUT OF CELL)	INCORRECT READING NO READING	JUMPER MALFUNCTION SENSOR TRANSMITTER	LACK OF PROTECTION FOR BEARING MAY RESULT. SEEN LATER AS REDUCED BEARING/DRAW BAR/SPINDLE LIFE	UPSTREAM AIR INSTRUMENTS	M1		
WEIR AIR SUPPLY FLOW ORIFICE	INCORRECT FLOW READING	TRANSMITTER OR INDICATOR FAILS OR GIVES ERRONEOUS READING	LESS INFORMATION TO TO OPERATOR		M1	RECALIBRATE OR REPLACE	

FAILURE MODE AND EFFECTS ANALYSIS/SINGLE FAILURE POINT SUMMARY

SYSTEM SOLVENT EXTRACTION

SUBSYSTEM HA CONTACTOR BANK COMPUTERS

PREPARED BY M.S. GRADY DATE MARCH, 1984

RELIABILITY REVIEW _____ DATE _____

PAGE ___ OF ___

ITEM NAME/FUNCTION	FAILURE	FAILURE CAUSES	FAILURE EFFECTS	FAILURE DETECTION	IMPORT-ANCE	CORRECTIVE ACTION REQUIRED	REPAIR TIME
LOCAL LOOP CONTROLLERS	TREATED SEPARATELY WITH RELEVANT INSTRUMENTS						
PROCESS CONTROL COMPUTER	NO CONTROL ERRONEOUS CONTROL	HARDWARE FAILURES MAJOR SOFTWARE ERRORS MINOR SOFTWARE ERRORS D–A AND A–D CONVERTERS WIRING AND INTERFACE FAILURES	PROCESS MAY NEED TO BE TAKEN MANUALLY BAD CONTROL MAY LEAD TO PLANT SHUTDOWN	PROCESS INSTRUMENTS	H–4		

Appendix B

FAULT-TREE LOGIC MODEL

This appendix presents the complete fault tree constructed for the extraction-scrub portion of the preconceptually designed BRET HA cycle. Fault-tree construction forces analysts to actively and deductively seek out failure events. Fault trees provide a visual display of how a system malfunctions and enable easier understanding of the system by persons other than the designer. The tree points out critical aspects of system behavior. It provides a benchmark against which to measure design modifications. The fault tree provides a basis for quantification by system reliability through the use of Boolean algebra techniques.

ORNL–DWG 84-10685R 1

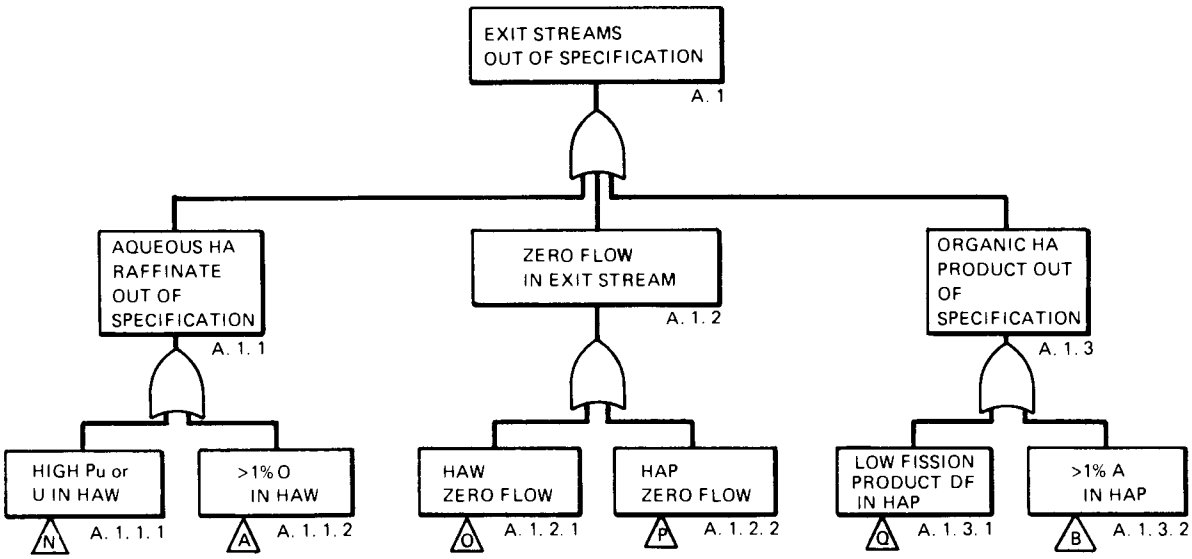

ORNL–DWG 84-11783

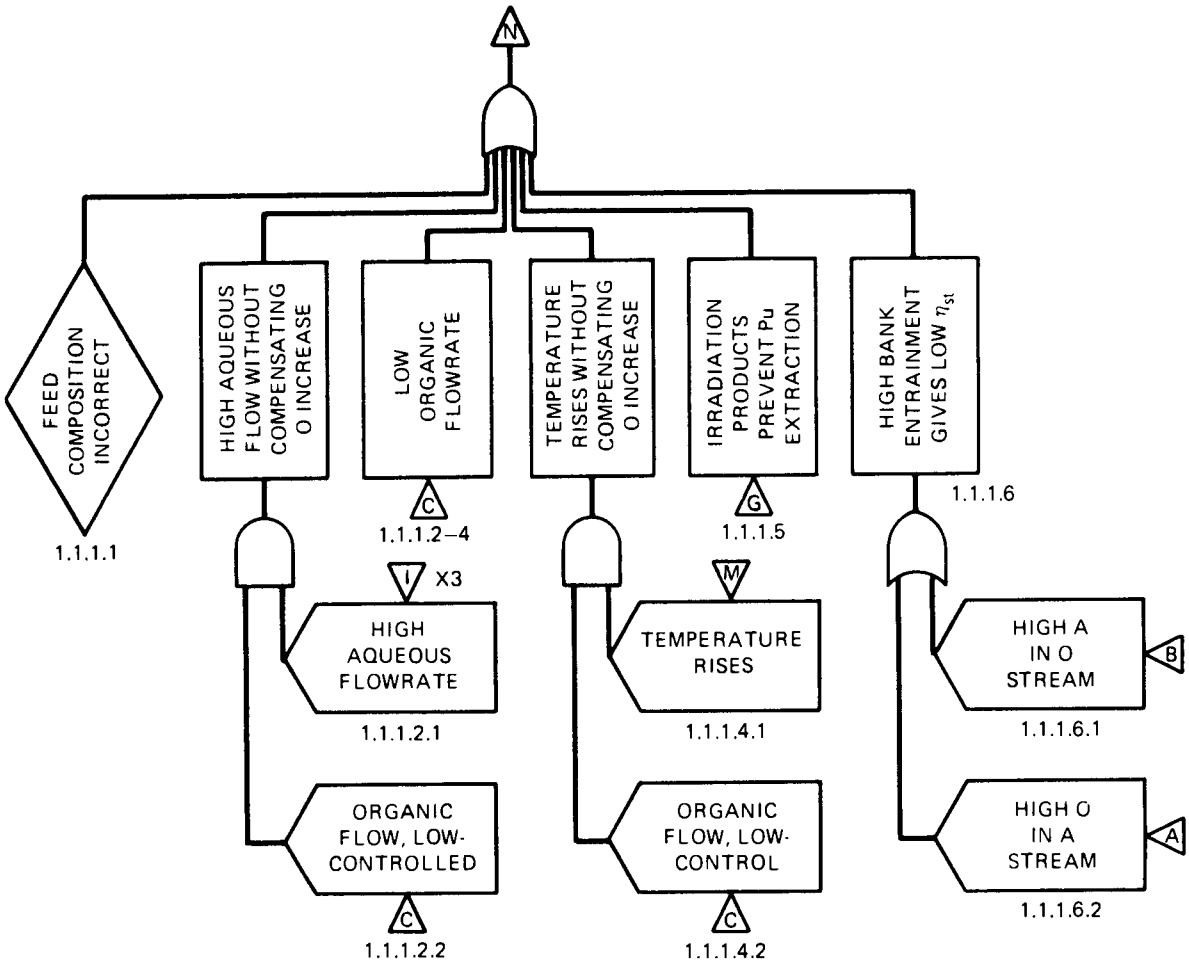

ORNL–DWG 84-11782

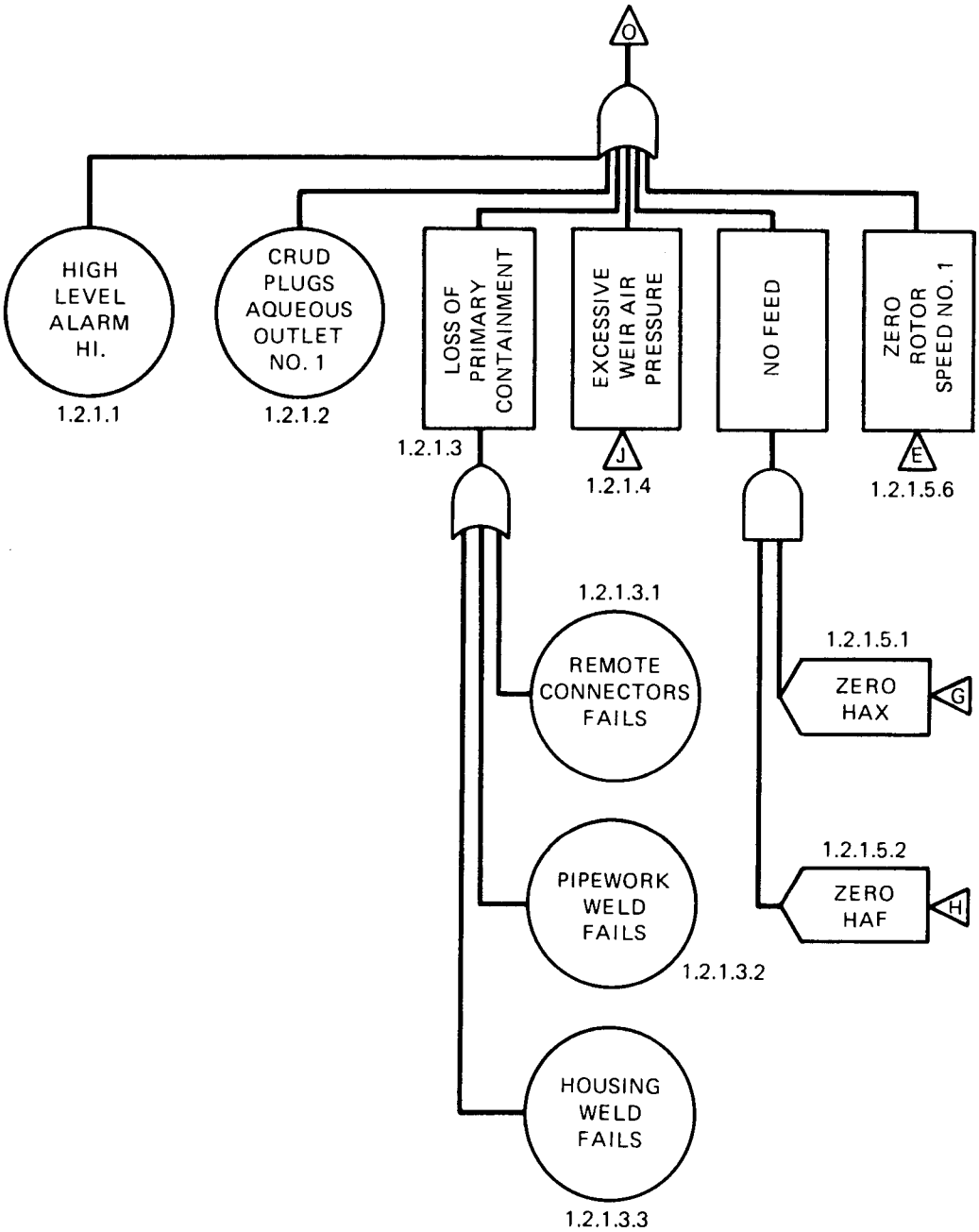

ORNL-DWG 84-11781

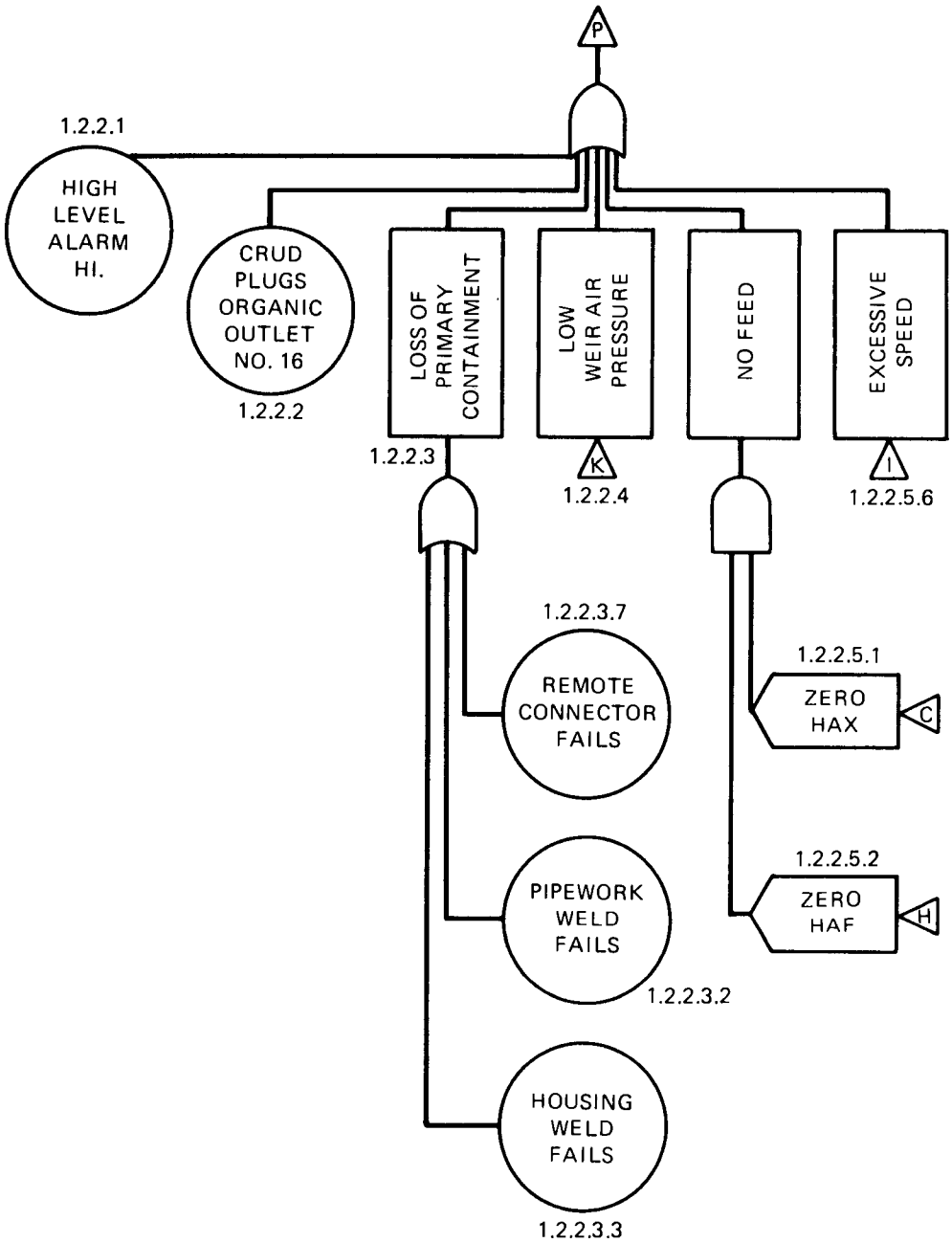

ORNL–DWG 84-11780

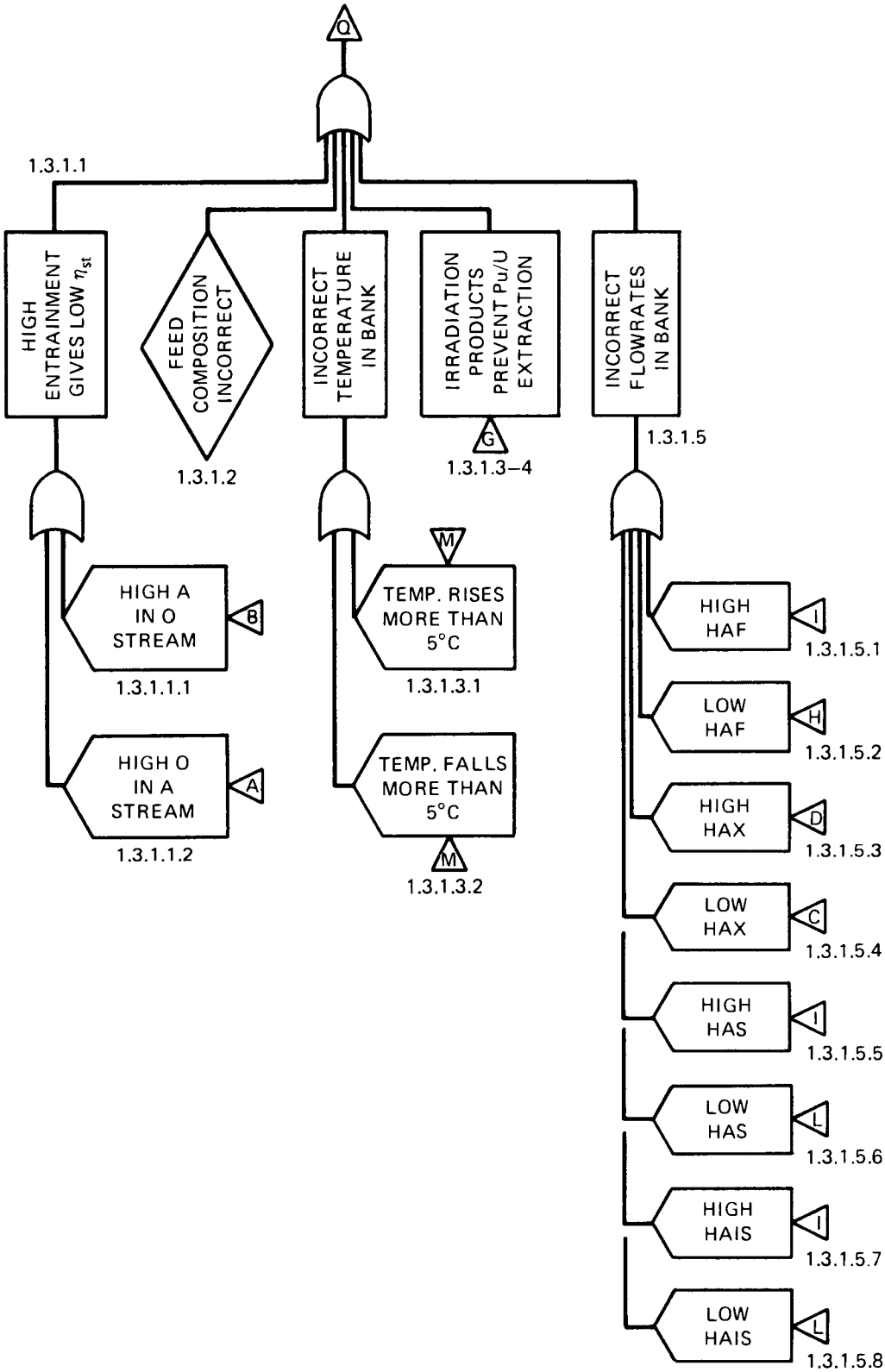

ORNL-DWG 84-10684R

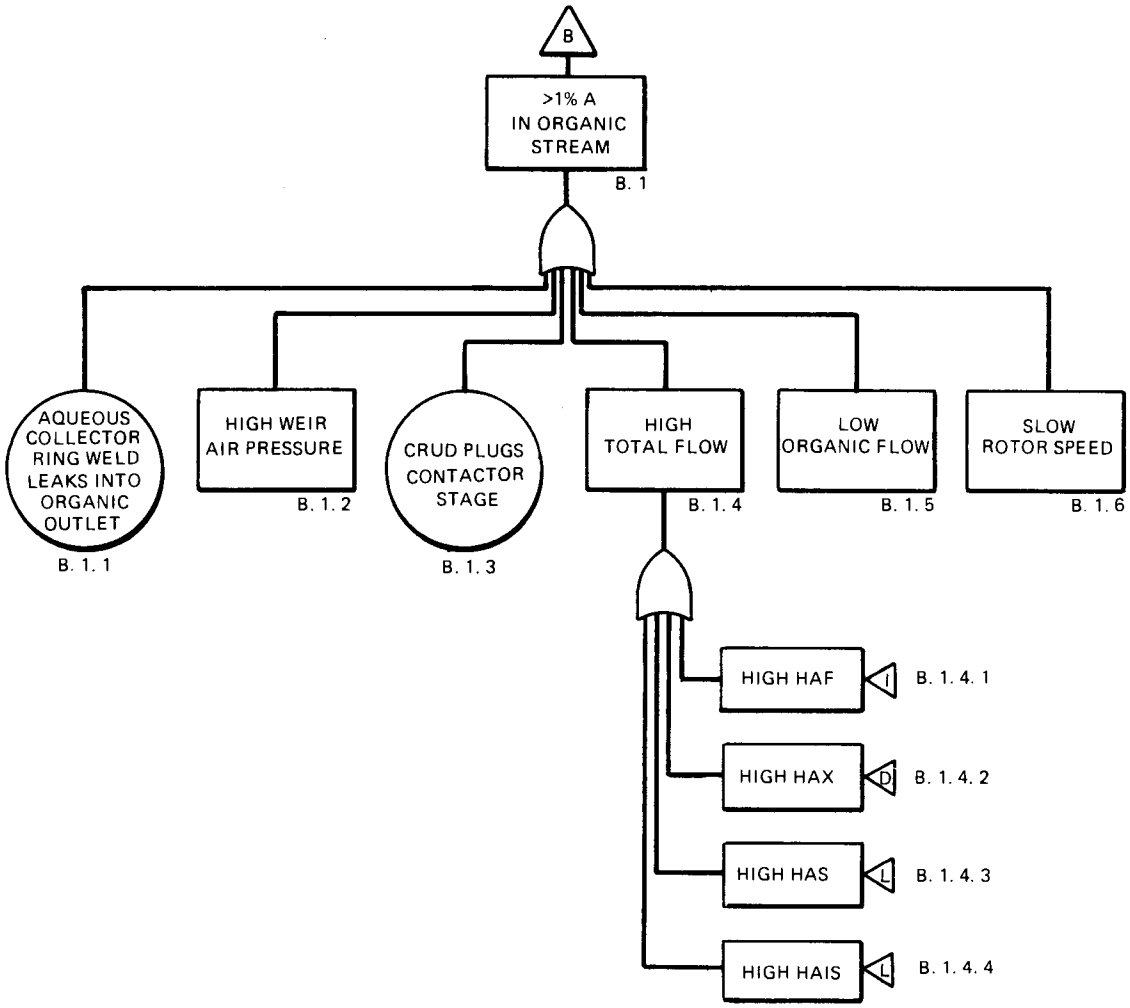

ORNL-DWG 84-11779

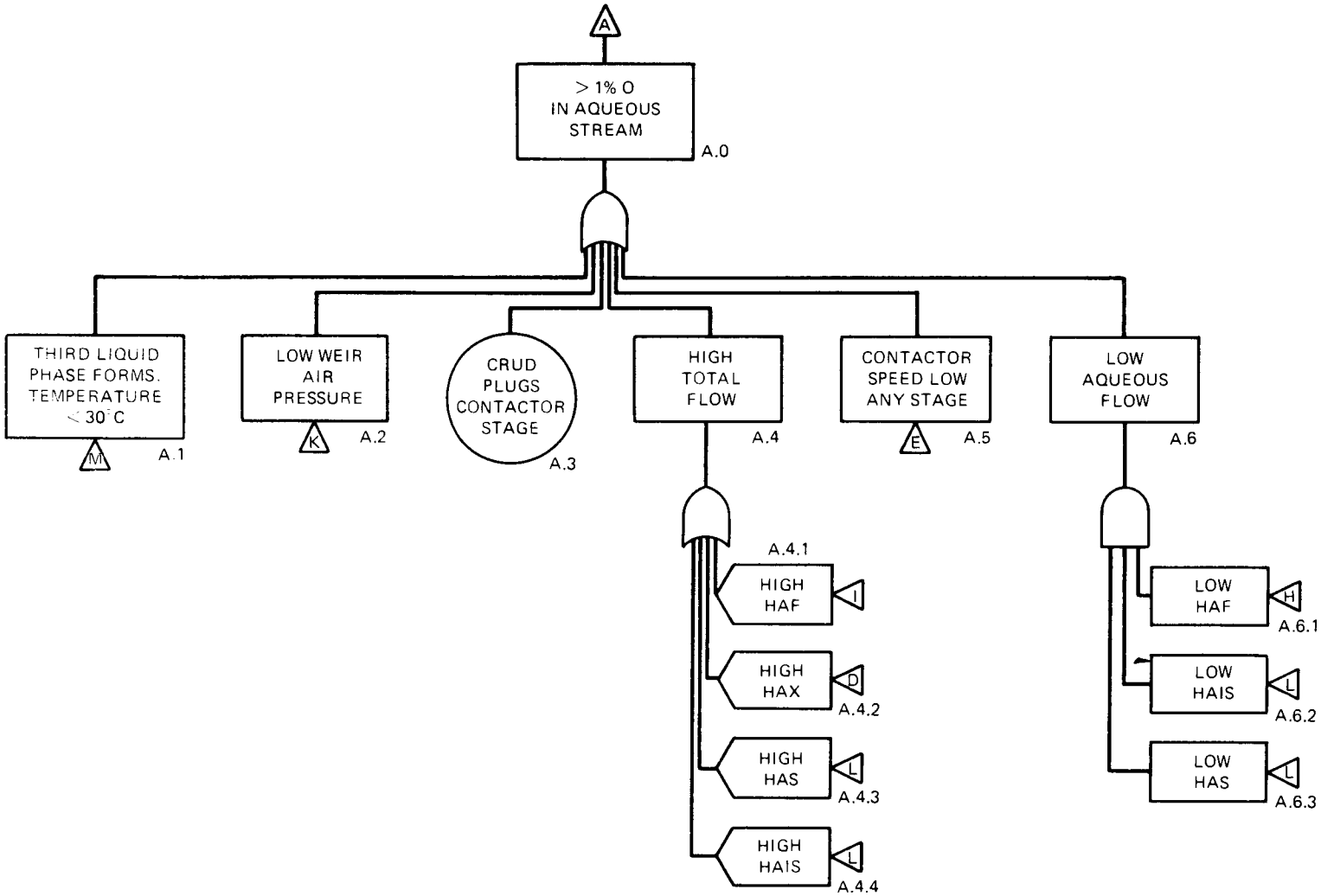

ORNL–DWG 84-11778

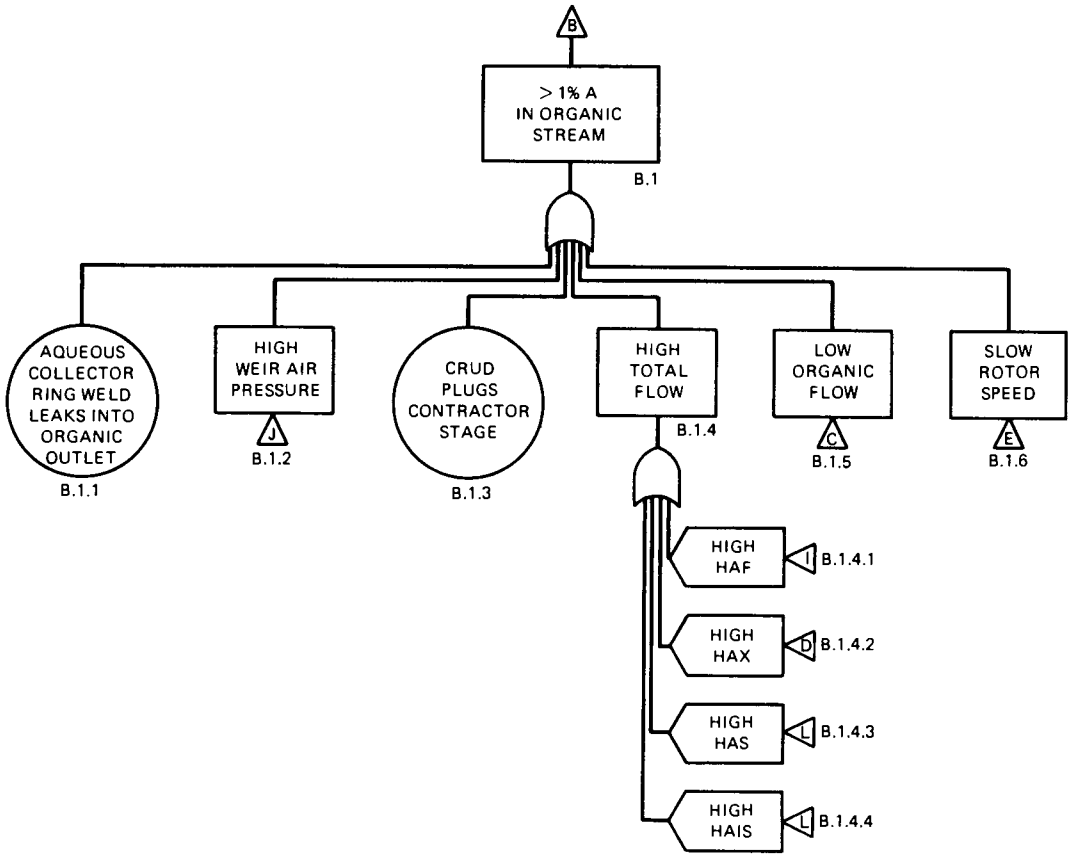

ORNL–DWG 84-11777

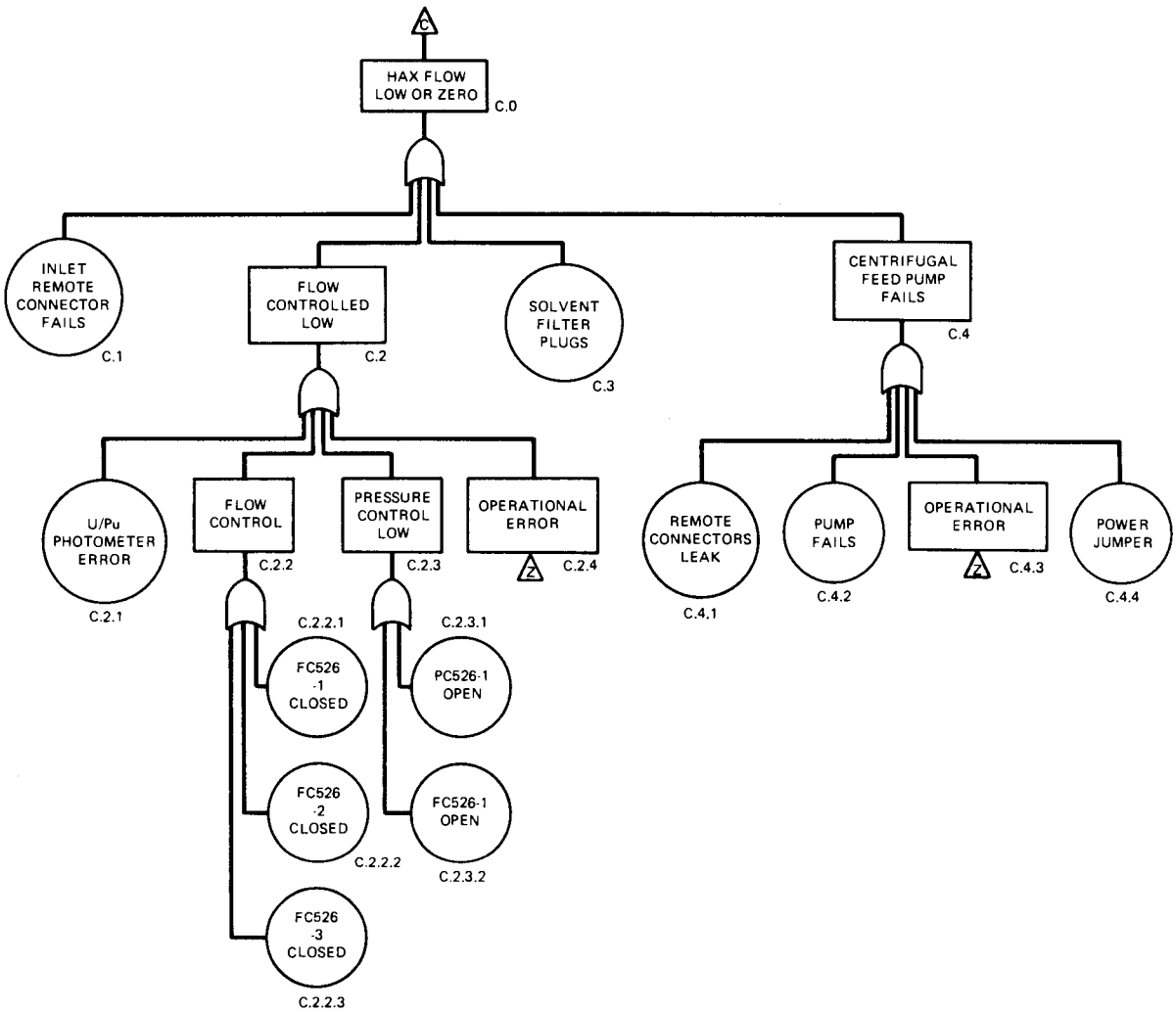

ORNL–DWG 84-11776

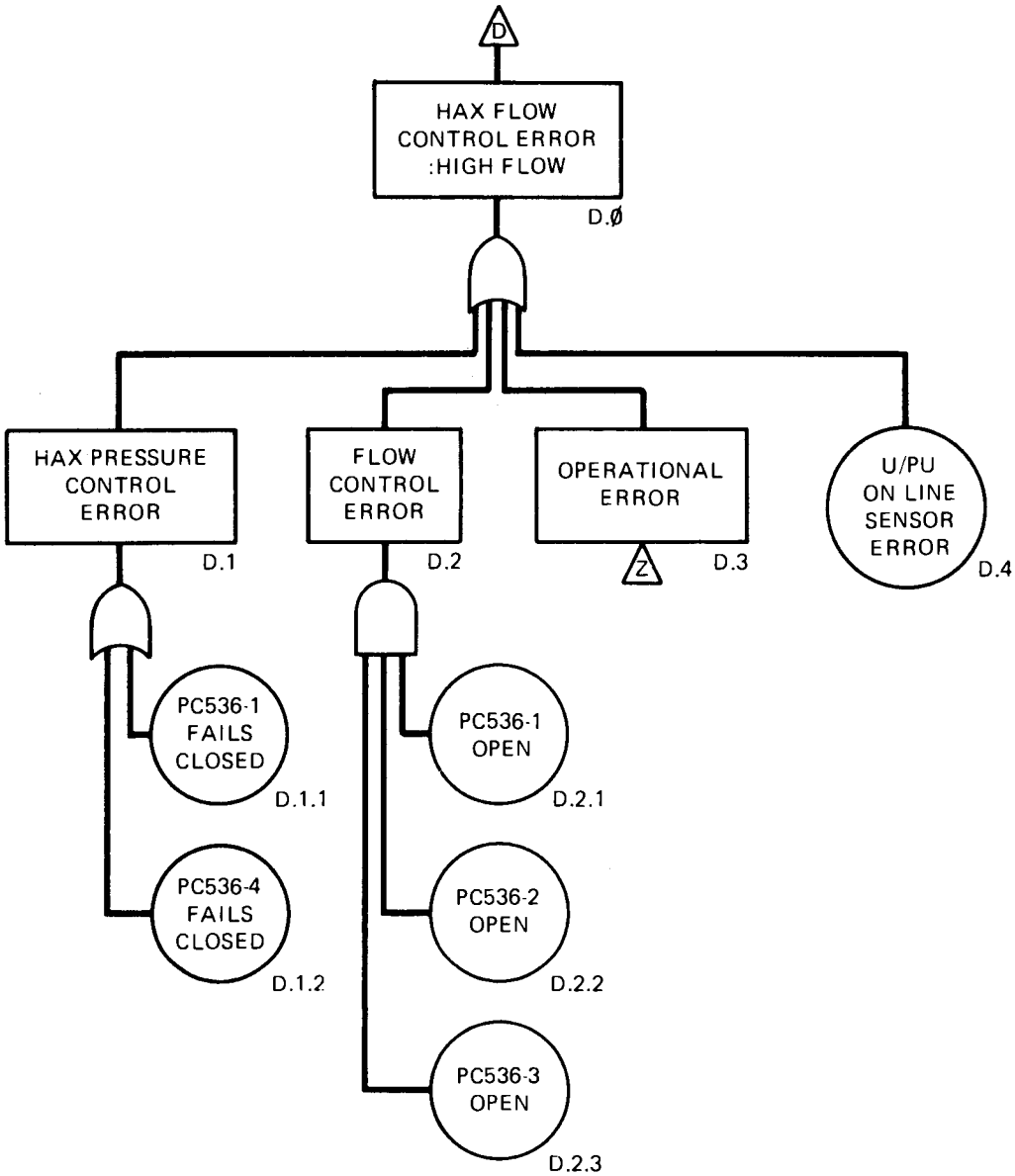

ORNL–DWG 84-11775R

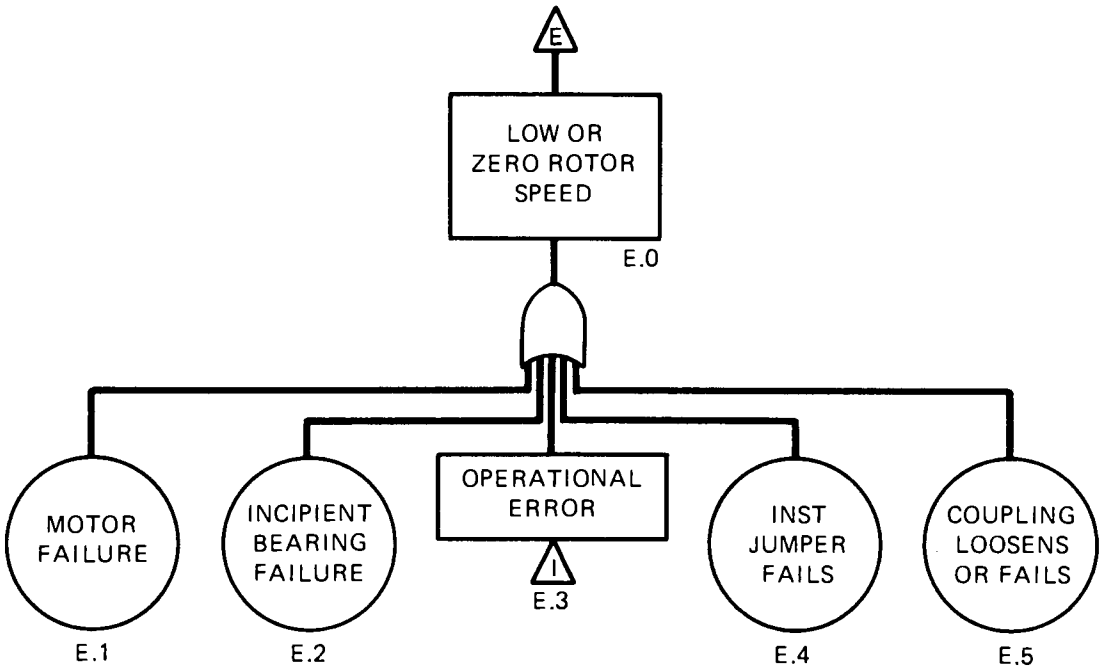

ORNL–DWG 84-11774

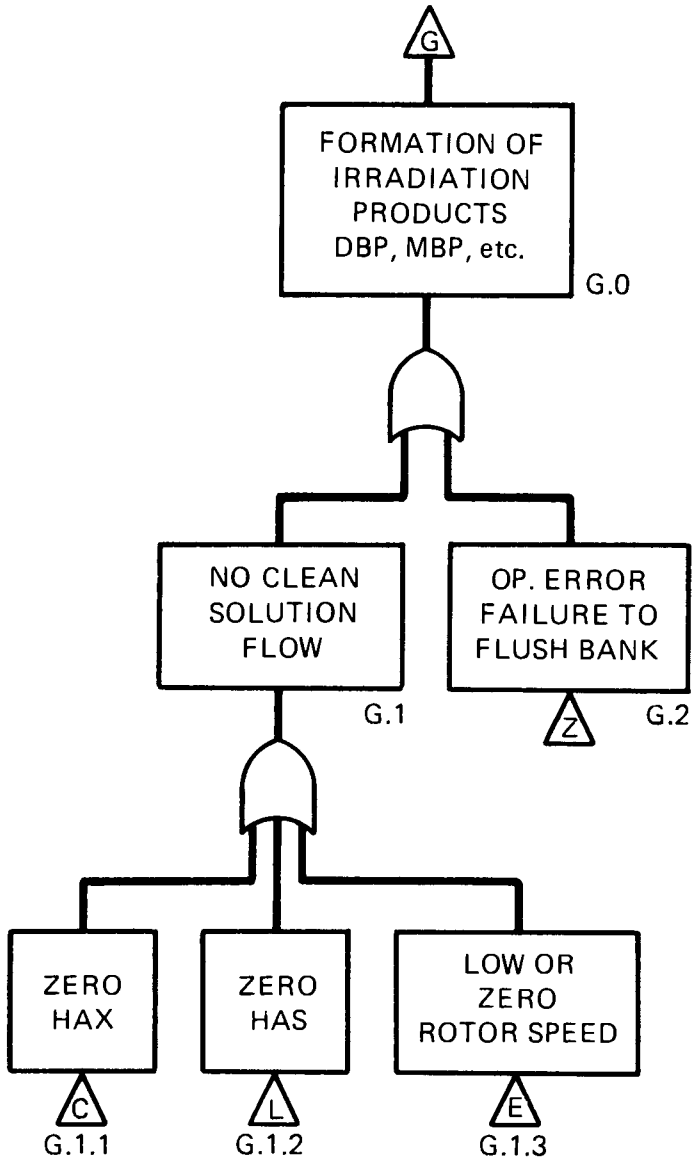

ORNL–DWG 84-11773

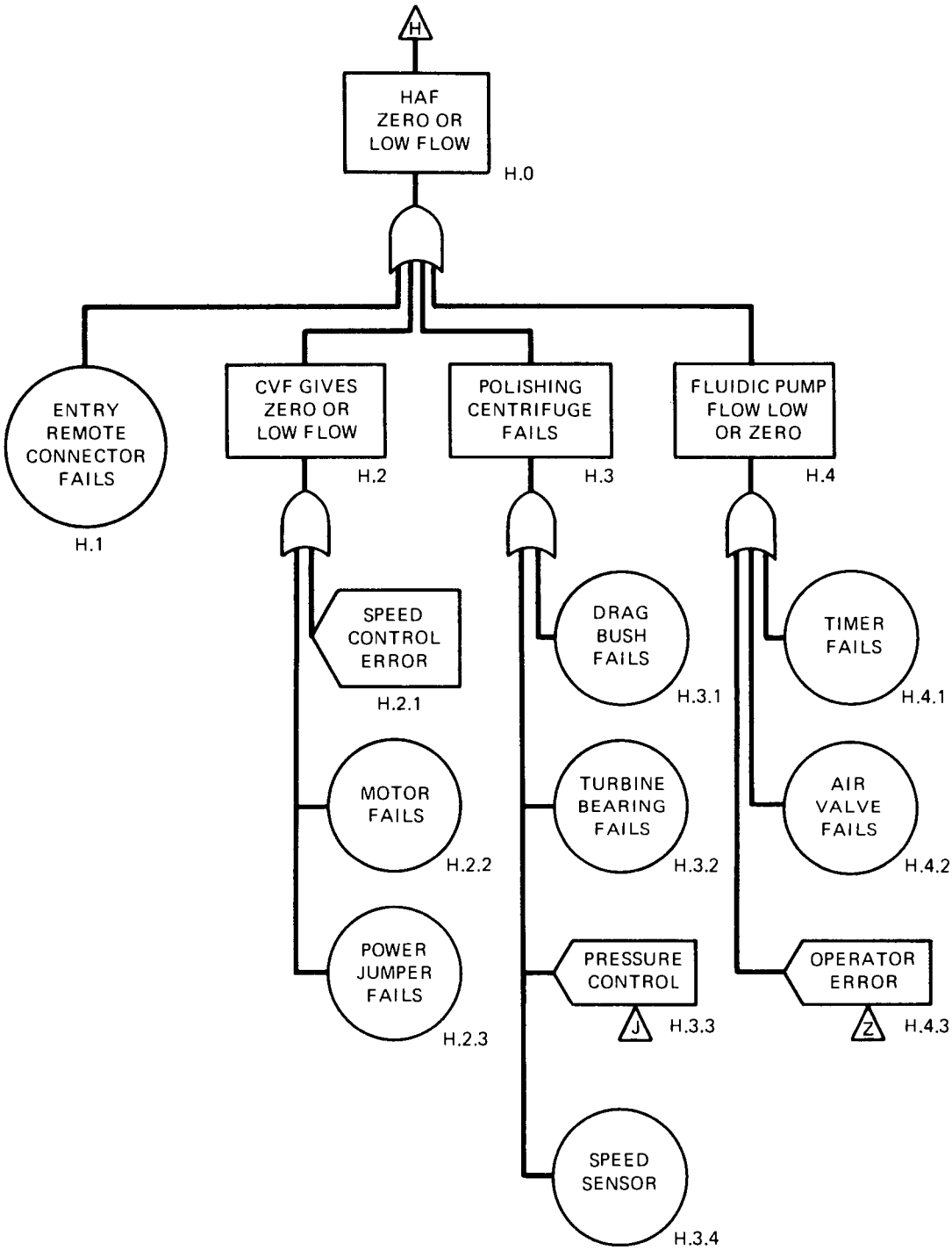

ORNL–DWG 84-11772

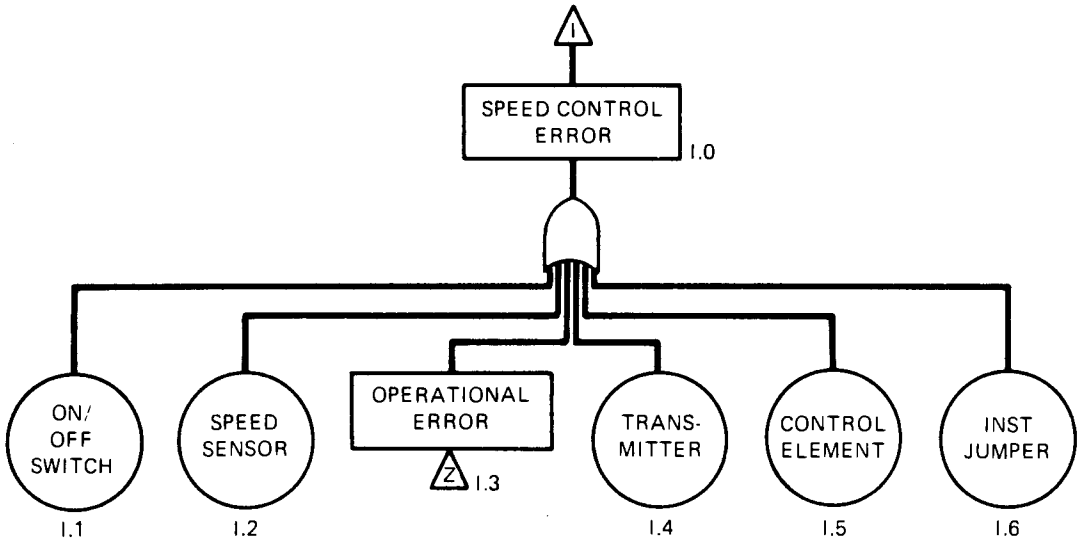

ORNL–DWG 84-11771

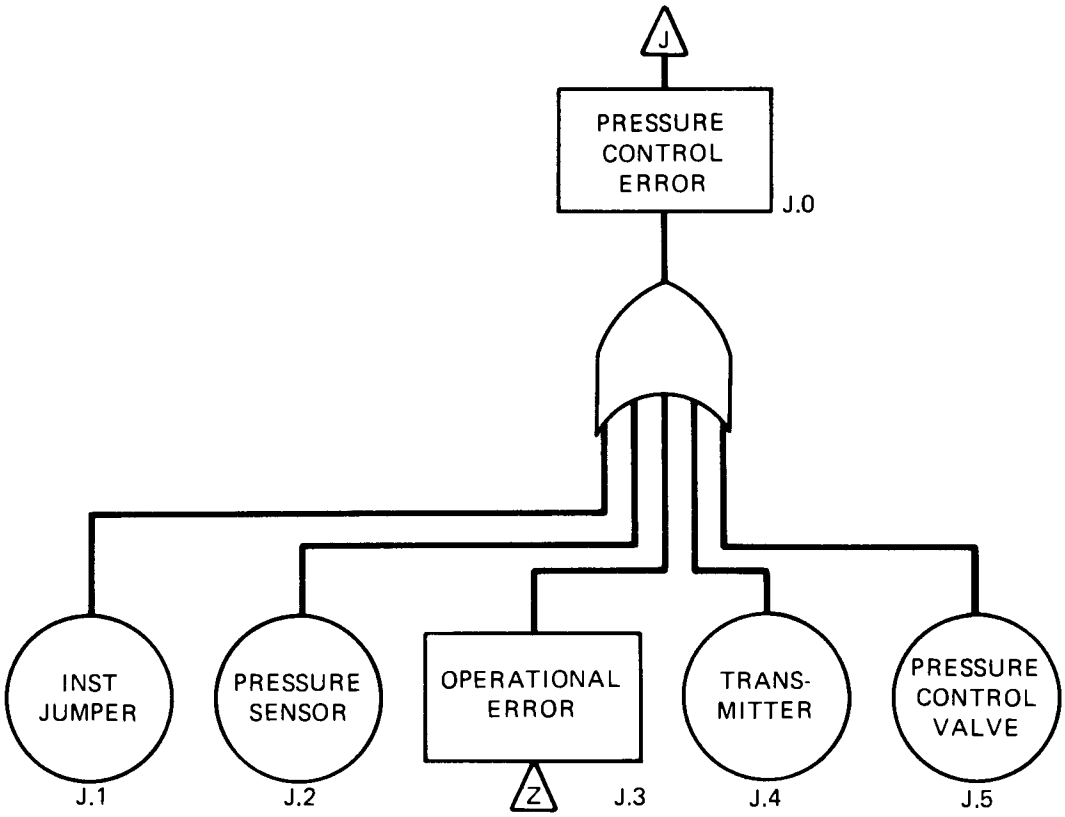

ORNL–DWG 84-11770

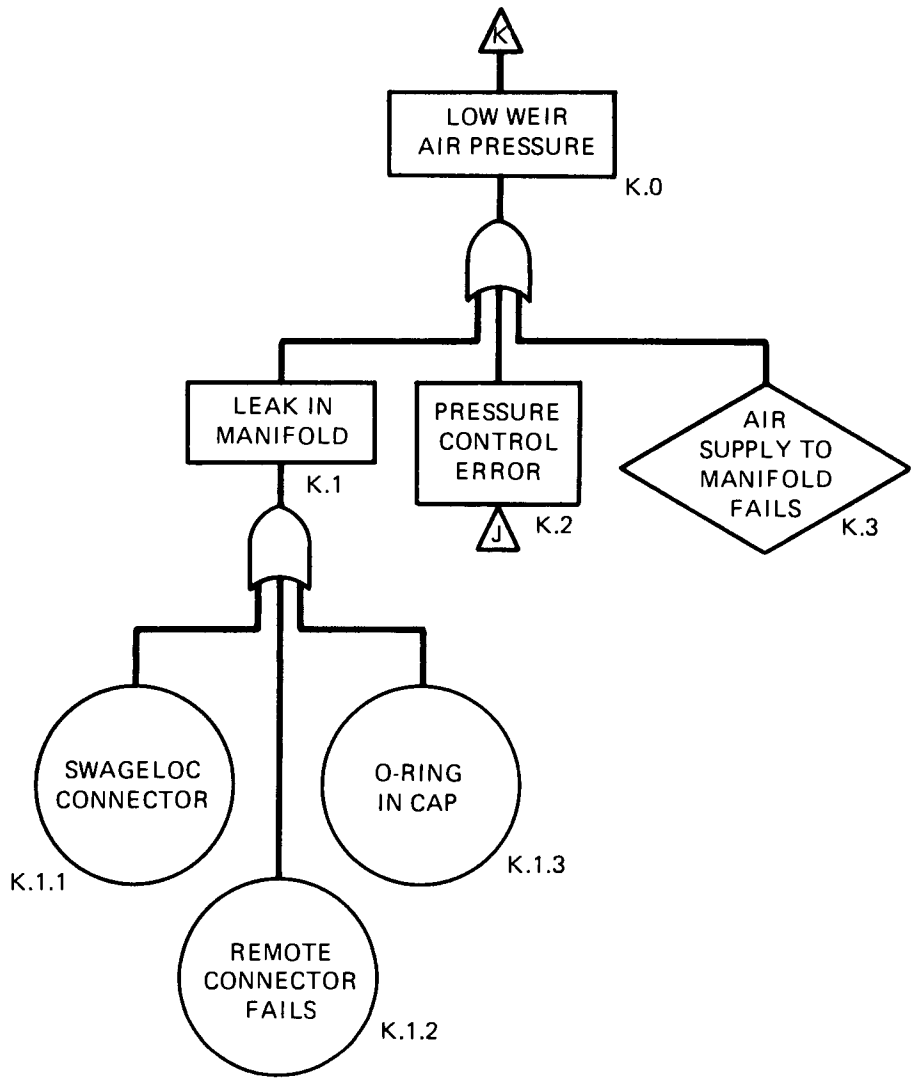

ORNL--DWG 84-11769

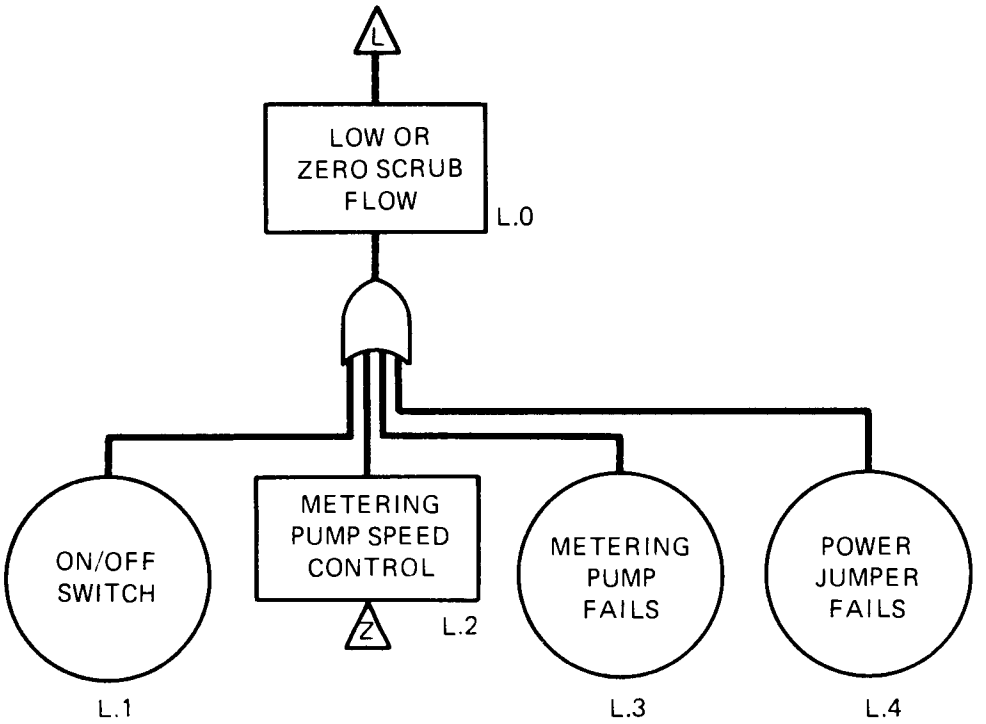

ORNL-DWG 84-11768

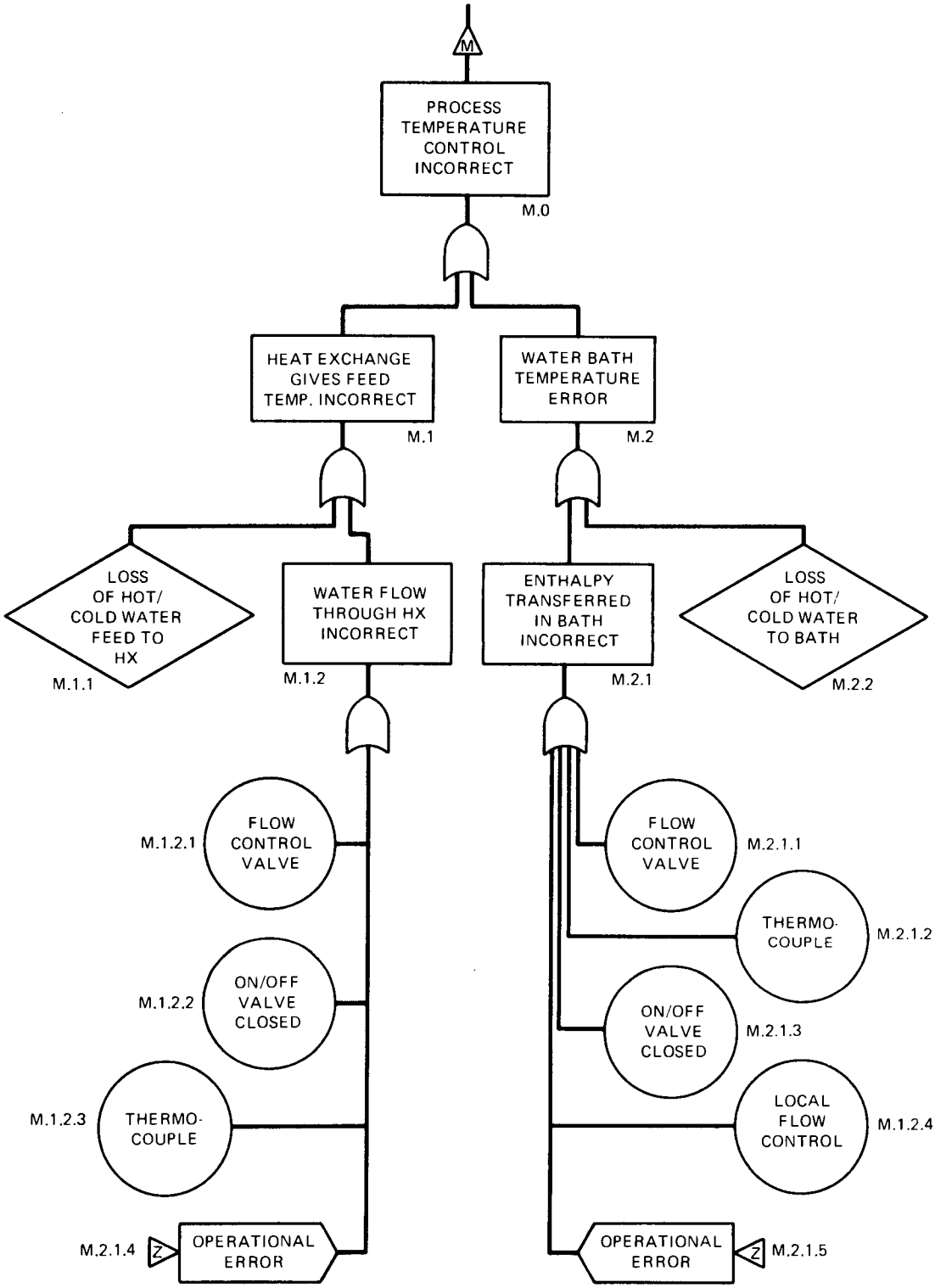

ORNL–DWG 84-11767

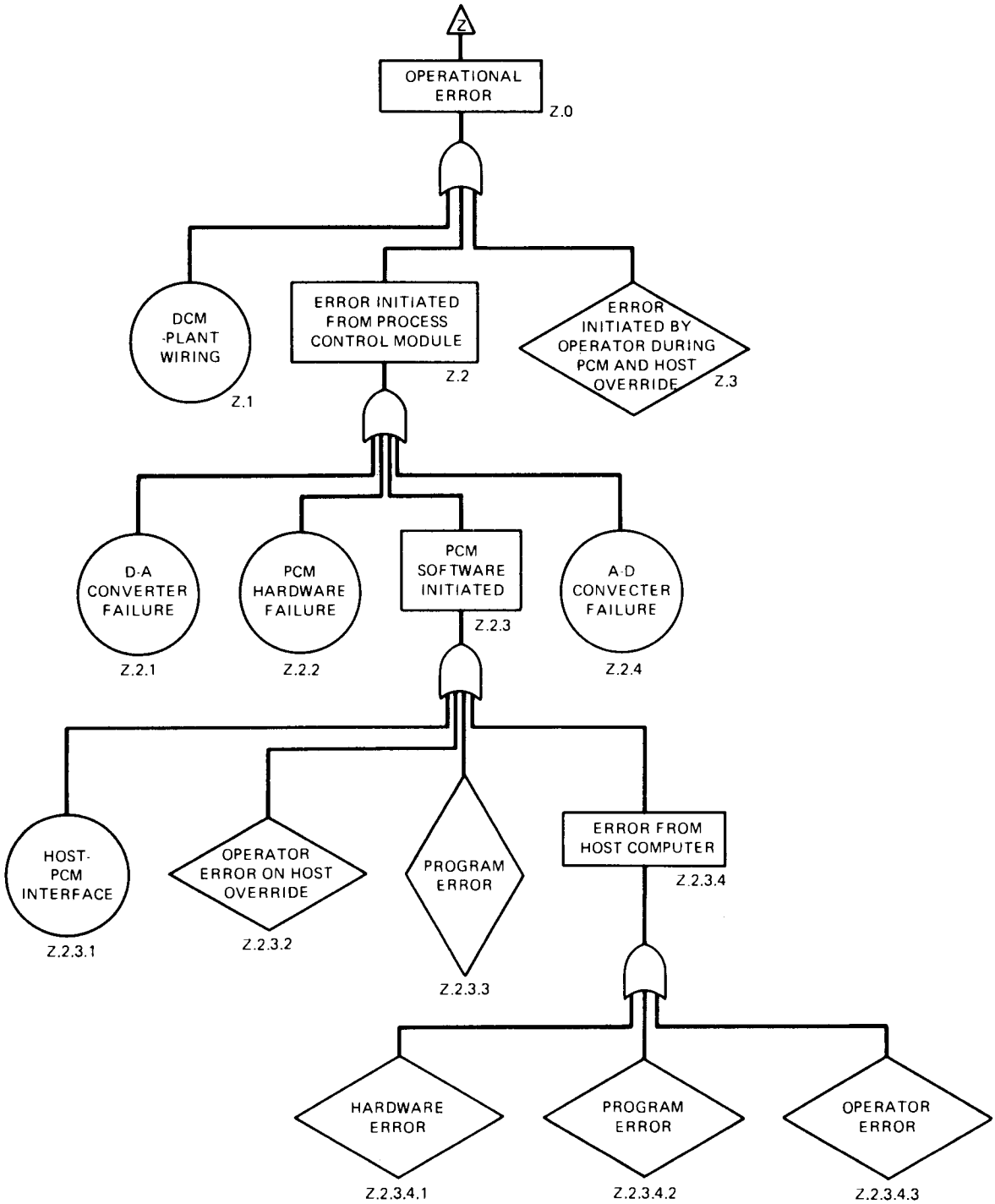

Appendix C

BASIC DATA AND CALCULATION WORKSHEETS

This appendix presents the worksheets used to calculate system availability and expected number of failures. Column A gives the location on the fault tree for each equipment item; column B gives the hazard or failure rate for each item; column C references the source for the failure rate data. Column D gives the environmental factor to be applied to the generic failure rate data. Column H gives the average of expert opinion on mean time to repair the fault. A description of the equations used to calculate availability and the expected number of failures per 30-d reprocessing campaign is given in Sect. 7.

Table C.1. Individual contactors

	Location in fault tree	Failure rate ($1/10^6$ h)	Reference for failure rate	Environmental factor	Location (I=in-cell; O=out-of-cell)	Number	Application failure rate ($1/10^6$ h) λ_i	Mean time to repair (h) τ_i	Unavailability ($1/10^6$ h) $a_i=\lambda_i \tau_i$	Expected number of failures (1/30 d) $enf_i \simeq t\lambda_i$
Motor	E.1	5	3	3	I	1	15	9.6	144	0.0108
Bearing	E.2	3.5	2	3	I	1	10.5	9.6	100.8	0.00756
Coupling	E.4	0.049	5	1	I	1	0.05	16.8	0.8	0.000036
Power jumpers	E.3	24	3	3	I	1	72	4.8	345.6	0.05184
Housing welds	1.2.1.3.2&3									
	1.2.2.3.2&3	0.6	6	1	I	2	1.2	24	28.8	0.000864
	B.1	0.1	6	1	I	1	0.16	9.6	1.5	0.0001152
High-level alarm fails high	1.2.1.1 1.2.2.1	8.2	3	3	I	1	24.6	4.8	118	0.0177120
Weir air pressure										
TRU remote connector	K.1.2	1.2	1	1	I	1	1.2	12	14.4	0.000864
Swagelok connector	K.1.1	1.6	1	1	I	1	1.6	12	19.2	0.001152
O-ring seal	K.1.3	0.2	7	3	I	1	0.6	7.2	0.4	0.000432
									773	0.091356

Table C.2. Contactor pack (four contactors)

	Location in fault tree	Failure rate ($1/10^6$ h)	Reference for failure rate	Environmental factor	Location (I=in-cell; O=out-of-cell)	Number	Application failure rate ($1/10^6$ h) λ_i	Mean time to repair (h) τ_i	Unavailability ($1/10^6$ h) $a_i=\lambda_i \tau_i$	Expected number of failures (1/30 d) $enf_i \simeq t\lambda_i$
Individual contactors[a]					I	4	50,764		3092	0.3654
Motor control										
Hand switch: power on/off	I.1	1.6	3	1	O	1	1.6	4.8	7.68	0.001152
Speed control: sensor, transmitter, element	I.2,I.4 I.5	1.73	3	1	O	1	1.7	48	81.6	0.0012240
Instrument jumper	I.6	20	3	3	O	1	60	4.8	288	0.043200
Operational error	I.3									
Remote connectors										
Weir air pressure	K.1.2	1.2	1	3	I	1	3.6	12	43.2	0.0025920
Aqueous process	H.1	1.2	1	3	I	2	7.2	12	86.4	0.0051840
Organic process	C.1	1.2	1	3	I	2	7.2	12	86.4	0.0051840
									3685	0.42393

[a]From Table E.1

Table C.3. Extraction-scrub or strip unit

	Location in fault tree	Failure rate ($1/10^6$ h)	Reference for failure rate	Environmental factor	Location (I=in-cell; O=out-of-cell)	Number	Application failure rate ($1/10^6$ h) λ_i	Mean time to repair (h) τ_i	Unavailability ($1/10^6$ h) $a_i=\lambda_i \tau_i$	Expected number of failures (1/30 d) $enf_i \simeq t\lambda_i$
Temperature control										
(i) Feed										
Flow-control valve (including actuator)	M.1.2.1	7.7	3	1	O	1	7.7	7.2	55.4	0.0055
On/off valve (closed)	M.1.2.2	7.7	5	1	O	1	7.4	7.2	55.4	0.0055
Thermocouple	M.1.2.3	10	8	3	I	2	60	4.8	288	0.0432
Operational error	M.1.2.4									
(ii) Bath										
Flow-control valve (including actuator)	M.2.1.1	7.7	3	1	O	1	7.7	7.2	55.4	0.0055
On/off valve (closed)	M.2.1.3	7.7	5	1	O	1	7.7	7.2	55.4	0.0055
Thermocouple	M.2.1.2	10	8	3	I	1	30	4.8	144	0.0216
Flow control: sensor, transmitter, valve	M.2.1.4	21	3	3	I	1	81	7.2	432	0.05836
Instrument jumper	M.2.1.6	17	3	3	I	2	102	7.2	734	0.07344
Operational error	M.2.1.5									
Analytical control										
Analyzer (assume photometer)	C.2.1	24	6	3	I	1	73	12	876	0.0526
Organic flow-control valve (inclusive)	C.2.2.1	7.7	5	3	I	1	23	7.2	165.6	0.0166
Instrument jumper (including power to activator)	C.2.5	17	3	3	I	2	102	4.8	489.6	0.07344
Operational error										
Crud-plugs unit	1.2.3.1 1.2.4.1 A.3 B.3	14	9	1		1	14	9.6	134.4	0.0101

Table C.3. (cont.)

	Location in fault tree	Failure rate ($1/10^6$ h)	Reference for failure rate	Environmental factor	Location (I=in-cell; O=out-of-cell)	Number	Application failure rate ($1/10^6$ h) λ_i	Mean time to repair (h) τ_i	Unavailability ($1/10^6$ h) $a_i=\lambda_i \tau_i$	Expected number of failures (1/30 d) $enf_i \simeq t\lambda_i$
Cables										
Electrical power (12 ft, two terminals)		24	3	3	I	1	72	12	864	0.05184
Instruments		34	3	3	I	1	102	12	1224	0.07344
Penetrations										
Electrical power		10	3	3	I	1	30	72	2160	0.0216
Instruments		10	3	3	I	1	30	72	2160	0.0216
Weir air-pressure control										
Pressure-control valve		7.7	3	1	O	1	7.7	7.2	55.4	0.005544
On/off valve		7.7	5	1	O	1	7.7	7.2	55.4	0.00544
Flow control: sensor, transmitter		15	3	3	I	1	45	4.8	216	0.03240
Instrument jumper		17	3	3	I	1	51	7.2	367.2	0.03672
									11,076	0.091356

Table C.4. Aqueous scrub streams to SX units

	Location in fault tree	Failure rate ($1/10^6$ h)	Reference for failure rate	Environmental factor	Location (I=in-cell; O=out-of-cell)	Number	Application failure rate ($1/10^6$ h) λ_i	Mean time to repair (h) τ_i	Unavailability ($1/10^6$ h) $a_i=\lambda_i \tau_i$	Expected number of failures (1/30 d) $enf_i \simeq t\lambda_i$
Metering pump						2				
Pump itself	L.4	30	5	1	O	2	60	12	720	0.0432
On/off switch	L.1	1.6	3	1	O	2	3.2	4.8	15.4	0.002304
Speed control (operational error)	L.3				O					
Pipework connector	L.2	1.6		1	O	4	6.4	12	76.8	0.004608
Power jumper	L.5	12A	3	1	O	4	24	288	0.01728	
									1100	0.067392

Table C.5. Solvent feed to SX unit/cycle

	Location in fault tree	Failure rate ($1/10^6$ h)	Reference for failure rate	Environmental factor	Location (I=in-cell; O=out-of-cell)	Number	Application failure rate ($1/10^6$ h) λ_i	Mean time to repair (h) τ_i	Unavailability ($1/10^6$ h) $a_i=\lambda_i \tau_i$	Expected number of failures (1/30 d) $enf_i \simeq t\lambda_i$
Flow-control valve	C.2.2.2									
(including actuator)	C.2.2.3	7.7	5	3	I	2	46.2	7.2	332.6	0.033264
Pressure-control valve	C.2.3.1									
(including actuator)	C.2.3.2	7.7	5	3	I	2	46.2	7.2	332.6	0.033264
Instrument jumpers to										
to valve actuators	C.2.3.2	17	3	3	I	4	204	4.8	979	0.1468800
Centrifugal pump	C.4					1				
Pump itself	C.4.2	70	6	3	I	1	210	24	5040	0.151200
Remote connectors, TRU	C.4.1	1.2	1	3	I	2	7.2	12	86.4	0.005184
Power jumper	C.4.4	12	3	3	I	1	36	12	432	0.025920
Operational error	C.4.3									
Solvent filter	C.3	3	4	3	I	1	9	7.2	64.8	0.0064800
									7267	0.402192

Table C.6. Active aqueous feed to SX cycle

	Location in fault tree	Failure rate ($1/10^6$ h)	Reference for failure rate	Environmental factor	Location (I=in-cell; O=out-of-cell)	Number	Application failure rate ($1/10^6$ h) λ_i	Mean time to repair (h) τ_i	Unavailability ($1/10^6$ h) $a_i=\lambda_i \tau_i$	Expected number of failures (1/30 d) $enf_i \simeq t\lambda_i$
Fluidic pump to header tank										
Timer	H.4.1	43	4	3	I	1	129	6	774	0.0929
Air valve (including actuator)	H.4.2	7.7	5	1	O	1	7.7	7.2	554.4	0.00554
Operational error	H.4.3									
Constant volume feeder										
Motor	H.2.2	5	3	3	I	1	15	9.6	144	0.0108
Motor speed control: sensor, transmitter, element	H.2.1	1.73	3	1	O	1	1.73	48	83	0.0012
Power jumper	H.2.3	12	3	3	I	1	36	12	432	0.02592
Clarification centrifuge										
Drag bush	H.3.1	0.08	2	1	I	1	0.08	4.8	0.38	0.0001
Turbine bearing	H.3.2	3.5	2	1	I	1	3.5	4.8	16.8	0.0025
Speed sensor	H.3.4	1.73	3	1	I	1	1.73	4.8	8.3	0.0012
Pressure control: PC valve (including actuator)	H.3.3	7.7	3	3	O	1	23.1	7.2	166.3	0.0166
Instrument jumper		34	3	1	O	1	34	12	408	0.0245
									2507	0.18126

Table C.7. Intercycle adjustment for uranium

	Location in fault tree	Failure rate ($1/10^6$ h)	Reference for failure rate	Environmental factor	Location (I=in-cell; O=out-of-cell)	Number	Application failure rate ($1/10^6$ h) λ_i	Mean time to repair (h) τ_i	Unavailability ($1/10^6$ h) $a_i=\lambda_i \tau_i$	Expected number of failures (1/30 d) $enf_i=t\lambda_i$
Fluidic pump: timer		43	4	3	I	1	129	6	774	0.09288
Air valve (including actuator)		7.7	5	1	O	1	7.7	7.2	554	0.0055
Constant volume feed Motor		5	3	3	I	1	15	9.6	144	0.0108
Speed control: sensor, transmitter, element		1.73	3	1	O	1	1.73	48	83	0.0012
Power jumper		12	3	3	I	1	36	12	432	0.025920
									1987	0.1313

Table C.8. Intercycle adjustment for plutonium

	Location in fault tree	Failure rate ($1/10^6$ h)	Reference for failure rate	Environmental factor	Location (I=in-cell; O=out-of-cell)	Number	Application failure rate ($1/10^6$ h) λ_i	Mean time to repair (h) τ_i	Unavailability ($1/10^6$ h) $a_i=\lambda_i \tau_i$	Expected number of failures (1/30 d) $enf_i \simeq t\lambda_i$
Fluidic pump										
Timer		43	4	3	I	1	129	6	774	0.0929
Air valve (including actuator)		7.7	5	1	O	1	7.7	72	554.4	0.0055
Constant volume feeder										
Motor		5	3	3	I	1	15	9.6	144	0.0106
Speed control: sensor, transmitter, element		1.73	3	1	O	1	1.73	48	83	0.0012
Power jumper		12	3	3	I	1	36	12	432	0.02592
NO_2 sparge										
Remote controller		1.2	1	1	O	1	1.2	12	14.4	0.0009
Swagelok		1.6	1	1	I	1	1.6	12	19.2	0.0012
O-ring seal		0.2	7	3	I	1	0.2	7.2	1.44	0.000
									2022	0.13822

Table C.9. Control error

	Location in fault tree	Failure rate ($1/10^6$ h)	Reference for failure rate	Environmental factor	Location (I=in-cell; O=out-of-cell)	Number	Application failure rate ($1/10^6$ h) λ_i	Mean time to repair (h) τ_i	Unavailability ($1/10^6$ h) $a_i=\lambda_i \tau_i$	Expected number of failures (1/30 d) $enf_i \simeq t\lambda_i$
Process control										
Module (PCM)	As listed									
D-A converter		4.3	3	1	O	1	4.3	4.8	20.6	0.0031
A-D converter		4.3	3	1	O	1	4.3	4.8	20.6	0.0031
PCM hardware		2.6	3	1	O	1	2.6	4.8	12.5	0.0019
Host computer	As listed									
Host-PCM interface		52	10	1	O	1	52	0.24	12.5	0.0374
Hardware		20	10	1	O	1	20	24	480	0.0144
Program errors										
Host (to demand shutdown)		2400	10	1	O	1	2400	2.4	5760	1.728
PCM (to demand shutdown)		320	10	1	O	1	320	2.4	768	0.2304
Electrical cables from penetration to computer										
Cable (30 cables, 30 ft.)		6	3	1	O	1	6	4.8	28.8	0.043
Terminals (two)		72	3	1	O	1	72	4.8	345	0.0518
									7448	2.0744

REFERENCES FOR APPENDIX C

1. J. D. McIntosh, and G. J. Raab, "Remote Maintenance in a Large Scale Separations Plant," *Proceedings of 14th Conference on Remote Systems Technology*, 1966.

2. H. A. Rothbart, *Mechanical Design and Systems Handbook*, McGraw-Hill, New York, 1964.

3. *IEEE Guide to the Collection and Presentation of Electrical, Electronic, and Sensing Component Reliability Data for Nuclear-Power Generating Stations,* ANSI/IEEE Std 500-1977, The Institute of Electrical and Electronic Engineers, Inc.

4. *Nonelectronic Parts Reliability Data,* NPPD-1, Reliability Analysis Center, Rome Air-Development Center, Griffis Air Force Base, New York, 1978.

5. B. J. Garrick et al., *Reliability Analysis of Nuclear Power Plant Protective Systems,* HN-190, Holmes and Narver, Inc., Nuclear Division, Los Angeles, 1967. (Plant Reliability Data System 1978 Annual Report of Cumulative.)

6. *Nuclear System and Component Reliability,* NUREG/CR-0942, Southwest Research Institute, San Antonio, Tex., 1979.

7. A. E. Garson, and A. J. Bourne, Safety Assessment with Reference to Automatic Protective Systems for Nuclear Reactors, UKAEA Health and Safety Branch, Rep. AHSB (S) R117, Part 3, Risley, Lancashire, 1966.

8. A. E. Green, and A. J. Bourne, *Reliability Technology,* John Wiley, New York, 1972.

9. M. J. Haire, unpublished data, 1984.

10. D. K. Lorenzo, JBF Assoc., Knoxville, Tenn., personal communication to M. J. Haire, Oak Ridge National Laboratory, April 1984.

ORNL/TM-9635
Dist. Category UC-86T
(Applied)

INTERNAL DISTRIBUTION

1. S. G. Barnes
2. J. O. Blomeke
3–5. W. D. Burch
6. D. O. Campbell
7. R. H. Chapman
8. R. M. Counce
9. R. V. Eberle
10. R. D. Ehrlich
11. M. J. Feldman
12. E. H. Gift
13. R. W. Glass
14. N. R. Grant
15–16. M. S. Grady
17. W. S. Groenier
18. P. A. Haas
19–23. M. J. Haire
24. D. C. Hampson
25–26. A. L. Harkey
27–28. R. T. Jubin
29. M. V. Keigan
30. E. H. Krieg, Jr.
31. R. E. Leuze
32. S. A. Meacham
33. D. R. Moser
34. E. L. Nicholson
35. F. L. Peishel
36. R. H. Rainey
37. S. P. Singh
38. G. E. Smith
39. B. B. Spencer
40. J. G. Stradley
41. T. D. Welch
42. M. E. Whatley
43. R. G. Wymer
44. O. O. Yarbro
45. H. R. Yook
46–47. Laboratory Records
48. Laboratory Records, ORNL-RC
49. ORNL Patent Section

EXTERNAL DISTRIBUTION

50. D. E. Bailey, Director, Division of Fuels and Reprocessing, U.S. Department of Energy, Washington, DC 20545
51. F. P. Baranowski, 1110 Dapple Grey Court, Great Falls, VA 22066
52. S. J. Beard, Vice President, Marketing and Uranium Operations, Exxon Nuclear Company, Inc., 600 108th Avenue, N.E., C-00777, Bellevue, WA 98009
53. M. Benedict, Department of Nuclear Engineering, Massachusetts Institute of Technology, 77 Massachusetts Avenue, Cambridge, MA 02139
54. R. Little, Princeton Plasma Physics Laboratory, James Forrestal Campus, P.O. Box 451, Princeton, NJ 08544
55. J. L. McElroy, Pacific Northwest Laboratories, P.O. Box 999, Richland, WA 99352
56. M. J. Ohanian, Associate Dean for Research, College of Engineering, 300 Weil Hall, University of Florida, Gainesville, FL 32611
57. J. F. Proctor, Senior Technical Specialist, E. I. du Pont de Nemours and Company, Savannah River Laboratory, Aiken, SC 29801
58. M. J. Rohr, Program Manager, Consolidated Fuel Reprocessing Program, Energy Programs Division, Energy Technology Branch, DOE-ORO, Oak Ridge, TN 37831
59. Office of Assistant Manager for Energy Research and Development, DOE-ORO, Oak Ridge, TN 37831

60–105. Given distribution as shown in TIC-4500 under UC-86T, Consolidated Fuel Reprocessing Category