MARTIN MARIETTA ENERGY SYSTEMS LIBRARIES
3 4456 0053626 7

ornl

ORNL/TM-9519

OAK RIDGE NATIONAL LABORATORY

MARTIN MARIETTA

Development of A Linked Forest Productivity-Soil Process Model

J. Pastor
W. M. Post

Environmental Sciences Division
Publication No. 2455

OAK RIDGE NATIONAL LABORATORY
CENTRAL RESEARCH LIBRARY
CIRCULATION SECTION
4500N ROOM 175
LIBRARY LOAN COPY
DO NOT TRANSFER TO ANOTHER PERSON
If you wish someone else to see this report, send in name with report and the library will arrange a loan.
UCN-7969 (3 9-77)

OPERATED BY
MARTIN MARIETTA ENERGY SYSTEMS, INC.
FOR THE UNITED STATES
DEPARTMENT OF ENERGY

Printed in the United States of America. Available from
National Technical Information Service
U.S. Department of Commerce
5285 Port Royal Road, Springfield, Virginia 22161
NTIS price codes—Printed Copy: A09 Microfiche A01

This report was prepared as an account of work sponsored by an agency of the United States Government. Neither the United States Government nor any agency thereof, nor any of their employees, makes any warranty, express or implied, or assumes any legal liability or responsibility for the accuracy, completeness, or usefulness of any information, apparatus, product, or process disclosed, or represents that its use would not infringe privately owned rights. Reference herein to any specific commercial product, process, or service by trade name, trademark, manufacturer, or otherwise, does not necessarily constitute or imply its endorsement, recommendation, or favoring by the United States Government or any agency thereof. The views and opinions of authors expressed herein do not necessarily state or reflect those of the United States Government or any agency thereof.

ORNL/TM-9519

ENVIRONMENTAL SCIENCES DIVISION

DEVELOPMENT OF A LINKED FOREST PRODUCTIVITY-SOIL PROCESS MODEL

J. Pastor and W. M. Post

Environmental Sciences Division
Publication No. 2455

Date Published - August 1985

Prepared for the
Carbon Dioxide Research Division
Office of Energy Research

Prepared by the
OAK RIDGE NATIONAL LABORATORY
Oak Ridge, Tennessee 37831
operated by
MARTIN MARIETTA ENERGY SYSTEMS, INC.
for the
U.S. DEPARTMENT OF ENERGY
under Contract No. DE-AC05-84OR21400

MARTIN MARIETTA ENERGY SYSTEMS LIBRARIES
3 4456 0053626 7

CONTENTS

	Page
LIST OF FIGURES	v
LIST OF TABLES	vii
ACKNOWLEDGMENTS	ix
ABSTRACT	xi
INTRODUCTION	1
1 OVERVIEW OF SOIL MODELING	6
1.1 DECOMPOSITION MODELING	6
1.2 SOIL WATER AVAILABILITY	11
1.3 SOIL PROPERTIES AND TREE GROWTH	14
2 GENERAL APPROACH AND MODEL STRUCTURE	18
3 USER'S GUIDE TO THE COMPUTER CODE	25
3.1 MAIN PROGRAM	25
3.2 SUBROUTINE INPUT	28
3.3 SUBROUTINE TEMPE	38
3.4 SUBROUTINE MOIST	39
3.5 SUBROUTINE DECOMP	41
3.6 SUBROUTINE GMULT	49
3.7 SUBROUTINE BIRTH	51
3.8 SUBROUTINE GROW	55
3.9 SUBROUTINE KILL	60
3.10 SUBROUTINE OUTPUT	62
3.11 RANDOM NUMBER GENERATOR	62
3.12 SUBROUTINE ERR	62
4 COMPUTING REQUIREMENTS	63
5 SAMPLE RUNS AND FUTURE WORK	64
6 REFERENCES	68
APPENDIX A. FORTRAN CODE	81
APPENDIX B. MODELING CARBON AND NITROGEN FLOWS DURING DECOMPOSITION	135
APPENDIX C. MODELING THE EFFECTS OF SOIL MOISTURE ON TREE GROWTH	147
APPENDIX D. MODELING THE EFFECTS OF SOIL NITROGEN ON TREE GROWTH	153

LIST OF FIGURES

Figure		Page
1	Hypothesized feedbacks and constraints in forest ecosystems	3
2	Schematic flow diagram of the model	19
3	Soil field moisture capacities and wilting points in relation to soil texture	21
4	Schematic of water balance calculations	42
5	The flow of carbon and nitrogen in subroutine DECOMP	44
6	Degree day, available light, soil water, and soil nitrogen growth multipliers for jackpine and basswood	50
B-1	Relationships between AET, lignin:nitrogen ratio, and weight loss	137

LIST OF TABLES

Table		Page
1	Variables in COMMON blocks	26
2	Common block communication between subroutines	27
3	Tree species parameters for model input	30
4	Decomposition parameters used in FDA1 and C	34
5	Species maximum heights, diameters, and ages	57
6	Sample runs for two soils in central Wisconsin	65
B-1	Decomposition parameters used in FDAT and C	141

ACKNOWLEDGMENTS

William Emanuel, Virginia Dale, and John Aber made helpful suggestions on an earlier draft of this manuscript. Lynn Tharp and Mary Stevenson provided programming assistance. J. Pastor was an Oak Ridge Associated Universities Postdoctoral Fellow in the Environmental Sciences Division during this research. The assistance of this organization is greatly appreciated.

ABSTRACT

PASTOR, J., and W. M. POST. 1985. Development of a linked forest productivity-soil process model. ORNL/TM-9519. Oak Ridge National Laboratory, Oak Ridge, Tennessee. 168 pp.

A general model of linked carbon-nitrogen cycles in forest ecosystems as constrained by climate and geology is described. The model, written in FORTRAN, is based on the JABOWA model of Botkin et al. (1972) as revised by Solomon et al. (1984). The birth, growth, and death of all trees greater than 1.43-cm dbh in a 1/12-ha plot are simulated. The return of litter and its decomposition are also simulated. Sunlight is the driving variable. Growing season degree days, soil water availability, and actual annual evapotranspiration are calculated from monthly rainfalls and temperatures as well as soil field moisture capacity and wilting point. Decomposition and soil nitrogen availability are calculated from organic matter quantity and carbon chemistry, evapotranspiration, and degree of canopy closure. Light availability to each tree is a function of leaf biomass of all taller trees. Degree days and the availabilities of light and water constrain species reproduction. These, along with soil nitrogen availability, constrain tree growth and hence carbon accumulation in biomass. The probability of a tree's dying increases with age and slow growth. Leaf, root, and woody litter are returned to the soil at the end of each year to decay the following year.

Parameters for 72 upland species of eastern North America are taken from literature data. Data the user of the model needs to provide include (1) latitude, (2) days of the year the growing season

begins and ends, (3) monthly mean temperatures and precipitation and their standard deviations, (4) soil field moisture capacities and wilting points, (5) initial soil organic matter and nitrogen contents, and (6) run parameters (i.e., number of years and plots simulated and output interval). Given these inputs, the model simulates species composition and ecosystem processes for most upland forests of eastern North America. Statistical summaries of selected ecosystem properties are provided as tabulated output.

INTRODUCTION

Carbon storage and flow through forest ecosystems are major components of the global carbon cycle (Woodwell et al. 1978, Armentano and Ralston 1980, Johnson and Sharpe 1983, Houghton et al. 1983). The carbon cycle is intimately coupled with the cycle of nitrogen and the flow of water through forests because both nitrogen and water availabilities limit net primary production of forests (Mitchell and Chandler 1939, Rosenzweig 1968, Gholz 1982, Pastor et al. 1984). Nitrogen availability is largely determined by nitrogen mineralization, the microbial conversion of soil organic nitrogen to ammonium with concomitant release of carbon dioxide (CO_2) during decomposition. The rate at which nitrogen mineralization occurs depends partly on climate but also on the type of carbon compounds with which the nitrogen is associated (Flaig et al. 1975, Gosz 1981, Melillo 1981, Stevenson 1982). Although plant growth and fixation of atmospheric carbon are partly determined by microbial production of ammonium (NH_4), the plants can influence soil nitrogen availability by the amount and type of litter they return to the soil.

This interaction between carbon and nitrogen is implicit in the well known C:N ratios of plant tissues or soils. These ratios are estimates of a plant's nutrient-use efficiency (Vitousek et al. 1982, Pastor et al. 1984), as well as an index of relative decomposition rates of litter and soil organic matter (Allison 1973). Post et al. (1982) and Zinke et al. (1984) found broad global patterns in soil carbon and nitrogen pools and soil C:N ratios that are explained by global vegetation and climate patterns. However, they also found wide

variations in soil carbon and nitrogen pools, as well as soil C:N ratios within certain vegetation-climate zones. They hypothesize that net primary production as related to soil nutrient and water status may explain much of this variation.

The hypothesis of this study is that the interaction between demographic processes determining plant populations, microbial processes determining nitrogen availability, and geological processes determining water availability may explain much of the observed variation in ecosystem carbon and nitrogen storage and cycling. Figure 1 is a diagram of these hypothesized interactions. According to our hypothesis, geology and climate are constraints within which feedback relationships between vegetation and light availability and between vegetation and nitrogen availability operate. These ecosystem processes, therefore, work within a geological framework. This concept can be found in the classic writings of Cooper (1923), Raup (1941), Billings (1941), Kittredge (1948), and Jenny (1941, 1980). Because of the complexity of these interactions, a computer model is needed to quantify their logical implications.

We have developed a computer model that simulates the processes involved in this hypothesis. The JABOWA class of models introduced by Botkin et al. (1972) and further developed by Shugart and West (1977); Solomon et al. (1984); Weinstein et al. (1982); and Aber, Mellillo, and Federer (1982) are eminently suited to this task because they predict ecosystem processes through the interaction of vegetation and available resources. These models track the birth, growth, and death of individual trees. Birth and diameter growth of individual trees are

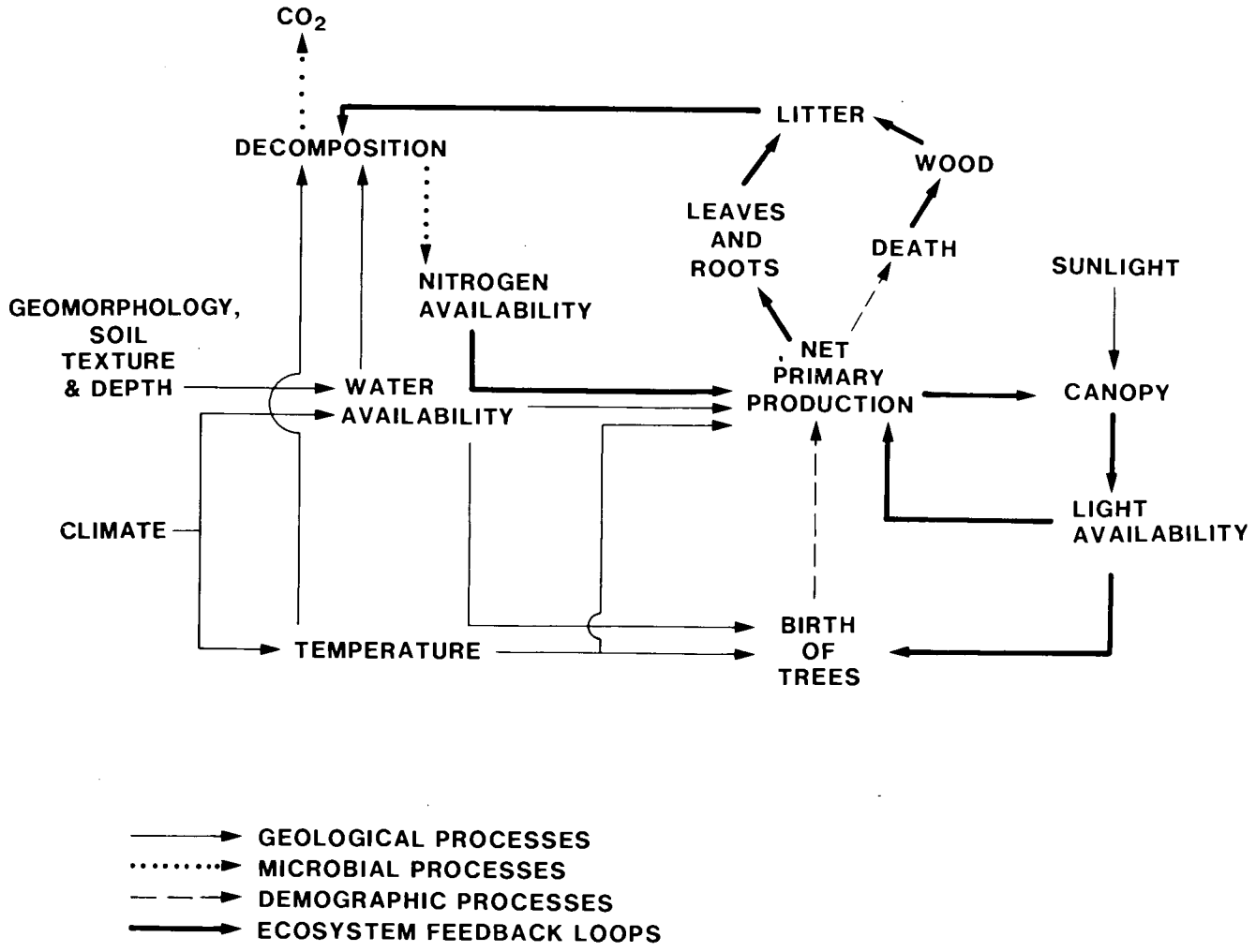

Fig. 1. Hypothesized feedbacks and constraints in forest ecosystems.

initially assumed to be optimum and then decreased to the extent that various site conditions (light, degree days, etc.) are less than optimum for each species. The probability of dying increases when tree-diameter increment falls below a minimum amount and as trees approach a maximum age for their species. While tree growth is determined by site conditions, it can also influence site conditions. For example, light extinction through the forest canopy is a function of leaf area or biomass of individual trees, but the potential diameter growth and leaf production of each tree are decreased by the extent that it is shaded by all taller trees (Botkin et al. 1972).

In most versions of these models, the influence of the soil on tree growth is approximated by a sigmoid function that asymptotes at the highest reported basal area or biomass for a given region (SOILQ). It is assumed that competition for soil moisture or nutrients prevents accumulation of biomass above this value (Botkin et al. 1972). If SOILQ is an index of soil water and nutrient availability, then simulating water and nutrient availability and their influence on tree growth should eliminate the need for SOILQ and allow for more realistic examination of the interaction of vegetation and soil processes.

This is a documentation of decomposition and water subroutines that have been added to a version of these models parameterized for 72 species of eastern North America (Solomon et al. 1984). This revised model predicts soil nitrogen and water availability and vegetation response, forest-floor carbon and nitrogen storage, forest-floor CO_2 evolution, and soil C:N ratios. This report is in

ten sections:

1. an overview of decomposition and soil water modeling,
2. a brief description of the model for users who do not need,
3. a user's guide to the computer code
4. computing requirements,
5. some sample runs,
6. literature cited,
7. an appendix containing the FORTRAN code,
8. an appendix detailing the development of the equations used to model decay,
9. an appendix detailing the development of equations describing the influence of water availability on tree growth, and
10. an appendix describing how the effect of available soil N on tree growth is modeled.

1. OVERVIEW OF SOIL MODELING

1.1 DECOMPOSITION MODELING

The seminal paper of Jenny, Gessel, and Bingham (1949) provided the paradigm on which most subsequent decomposition models are based. They postulate a value k':

$$k' = A/(A + Fe) \quad , \tag{1}$$

where A is annual additions of material to the forest floor and Fe is the minimum annual weight of the forest floor. When the soil carbon pool is in equilibrium, k' is a percentage of the forest floor lost every year and is equal to annual inputs. The value k' is often called "turnover rate" (percent lost per year) while its inverse is often called "residence time" (years material resides in forest floor).

This paradigm was formalized by Olson (1963) in what is now one of the most cited papers in ecology. Olson used an exponential-decay model to calculate decomposition rate:

$$\%\ \text{remaining}(t) = \exp(-kt) \quad , \tag{2}$$

where k is the instantaneous decay rate and

$$k' = 1 - \exp(-kt) \quad . \tag{3}$$

These models have been used quite successfully to estimate decay rates of individual species' leaf, twig, and wood litter (Gosz et al. 1976, Lousier and Parkinson 1976, MacClean and Wein 1978). However, this approach has been criticized by Minderman (1968), who pointed out that plant tissues are not chemically homogeneous, that individual

chemical fractions (proteins, tannins, lignin, etc.) have their own intrinsic decay rates, and that litter decomposition is the sum total of the decay of all fractions. Decay rates do not remain constant, as implied by extrapolation of the above models, but slow as the relative proportions of recalcitrant compounds (lignin etc.) increase (Pandey and Singh 1982).

A number of variations of the exponential-decay model, such as double exponential-decay models (Bunnell and Tait 1974, Lousier and Parkinson 1976, Hunt 1977, Seastadt and Tate 1981) and alternative approaches such as asymptotic and quadratic decay (Howard and Howard 1974), have been proposed to account for long-term decline in decay rates. In a review of simple decay models, Wieder and Lang (1982) concluded that single or double exponential-decay models are more biologically realistic than asymptotic or quadratic decay models.

The next step in the development of decomposition models was to relate decay rates to environmental parameters such as temperature, moisture, nutrient supply, and microbial population dynamics. There are a number of very detailed models of microbial processes (Bunnell and Dowding 1974, Hunt 1977, Bunnell et al. 1977, Juma and Paul 1981, Smith 1982). These models characteristically work on a short time step (1 d or less), predict decomposition by modeling microbial populations, and have high data requirements. Although such models can be quite accurate in predicting short-term decay (Bunnell et al. 1977, Juma and Paul 1981), their accuracy over years or decades is difficult to determine because of problems with extrapolation (Bosatta and Staaf 1982). The short time step and high data requirements of these models make them expensive to run and parameterize.

A simpler approach is predicting decay rates from more easily measured climatic and chemical indices rather than modeling the detailed microbial dynamics. This approach is desirable when examining long-term trends in decomposition with succession or when examining global patterns of decomposition. Caution must be exercised in choosing indices that are biologically meaningful.

Decay rate is often negatively related to substrate C:N ratio (Phillips et al. 1930, Pinck et al. 1950, Allison 1973). Litter C:N is initially much greater than microbial C:N but approaches microbial C:N as the microbes release the carbon as CO_2 while taking up nitrogen (nitrogen immobilization). The farther the initial litter C:N is from microbial C:N, the slower the decay rate (Alexander 1977). Lignin content or lignin:nitrogen ratios may be better predictors of decay rates (Peevy and Norman 1948, Fogel and Cromack 1977, Melillo et al. 1982) because lignin itself is difficult to decompose, and it shields nitrogen and other more easily degraded chemical fractions from microbes (Flaig et al. 1975, Stevenson 1982).

Climatic indices that correlate well with decay rates include plant moisture and temperature indices (Fogel and Cromack 1977), linear combinations of temperature and rainfall (Pandey and Singh 1982), and actual evapotranspiration (AET; Meentemeyer 1978). These climatic indices are estimates of potential rather than actual microbial perception of soil water availability and temperature.

On a global scale, climate may be the most important factor controlling decay rates, but within a given region substrate chemistry is the more important factor (Meentemeyer 1978, Flanagan and Van Cleve

1983, McClaugherty et al. 1985). The most successful and concise simple models of decay rates use combinations of climatic and chemical indices (Meentemeyer 1978).

Although decomposition is sometimes modeled separately from other ecosystem processes (Bunnell and Tait 1974, Hunt 1977), forest decomposition models are often subroutines of large-scale simulations of forest growth (Ingestad et al. 1981, Weinstein et al. 1982, Aber et al. 1982, Kimmins and Scoullar 1979). The most sophisticated models of decomposition in forest soils (Weinstein et al. 1982, Aber et al. 1982) are both derivatives of the JABOWA model of Botkin et al. (1972).

Weinstein et al. (1982) used Meentemeyer's (1978) equation to predict decomposition of leaves, branches, boles, and roots from AET and tissue lignin content. Decay of individual species litter is not simulated. Rather, decay of each year's cohort of leaf litter over all species is simulated from tissue lignin and nutrient concentrations weighted over all species on the site. Although decay rates were functions of both climate and litter quality, changes in litter quality during decay were not simulated. Nutrient releases from decaying litter were determined by site- and nutrient-specific turnover rates (k') adjusted by the ratio of lignin concentration used in the model to that of the material used to experimentally determine turnover rates. After residing in a primary decomposition layer, the nutrients and carbon are transferred to a secondary decomposition layer. Here, microbial uptake of each nutrient (immobilization) is a function of the ability of the transferred material to meet an assumed optimal organism C:nutrient ratio. If the material does not meet microbial demands, an

extra amount of the nutrient is removed from the soil solution. If the nutrient content of the material exceeds microbial demands, the excess is released to the soil solution and is available for plants.

Aber et al. (1982) predicted decomposition from k values that were determined by lignin:nitrogen ratios. As a consequence, climate influences decomposition only insofar as it influences species composition. Because decay rates are set by predetermined k values, the model does not allow for changes in litter quality and decay rates during decomposition.

The strength of the model of Aber et al. is its ability to simulate nitrogen dynamics of decomposing litter. A major problem in simulating nutrient dynamics during decomposition has been to predict microbial demand for nitrogen. In contrast to organic matter, which is continuously lost as CO_2, the rate of uptake of nitrogen by microbes is initially greater than its release as a waste product during the early stages of microbial growth, resulting in a net increase in litter N content (immobilization). As the material becomes progressively richer in recalcitrant compounds such as lignin, the rate of N release begins to exceed uptake, resulting in a net decrease in litter N content (mineralization). This commonly happens when the nitrogen concentration of the litter-microbe complex reaches 2% (Alexander 1977), but this "critical nitrogen concentration" can vary widely and is related to the initial lignin:nitrogen ratio of the litter (Melillo et al. 1982).

During the first 2 years of decay, the fraction of organic matter remaining at any time is linearly related to the nitrogen concentration

in the material at that time (Aber and Melillo 1980, Staaf and Berg 1982):

$$\text{fraction of OM remaining} = A - B(\%\ N) \tag{4}$$

The slope and intercept of this equation vary among litter types and can be used to predict nitrogen immobilization per gram of weight loss (nitrogen equivalent) and the critical nitrogen concentration (Aber and Melillo 1982a).

The forest ecosystem model of Aber et al. (1982) uses these relationships to predict nitrogen dynamics of decaying litter. In their model, each year's cohort of six leaf-litter types of different lignin:nitrogen ratios, woody litter, roots, and twigs is maintained in a litter pool as long as the cohort immobilizes nitrogen. The nitrogen concentration is recalculated at the end of each year, and when it reaches the critical nitrogen concentration, the litter is transferred to a soil humus pool. Nitrogen mineralization from humus was assumed to be 9.5% of the total humus nitrogen pool per year, based on data from the Hubbard Brook Forest. More recent research indicates that nitrogen mineralization from humus is itself related to the C:N ratio of the litter that forms the humus and that a 9.5% turnover rate is not often achieved (Pastor et al. 1984).

1.2 SOIL WATER AVAILABILITY

The soil is the primary storehouse of water for plants. Potential evaporative loss of soil water by plant transpiration is driven by the net radiation impinging on the canopy. The actual loss is determined by the ability of the soil to supply evaporative demand. Models of

evaporative loss and water use differ mainly in the assumptions made in describing the relations between net radiation and potential evapotranspiration and between soil water supply and actual evapotranspiration. Models that make few assumptions consequently have high data requirements.

Penman's (1948) approach combines data on incoming radiation, heat transfer, and mass transfer to predict potential evapotranspiration. The mass transfer of water from liquid to vapor assumes that potential evapotranspiration is a function of wind speed and the difference in vapor pressure between the water surface and the atmosphere:

$$Ea = (0.013 + 0.00016u)(esa - ea) \quad , \tag{5}$$

where Ea is potential evapotranspiration ($cm \bullet d^{-1}$), u is wind speed ($km \bullet d^{-1}$), esa is saturation vapor pressure of a water surface (millibars), and ea is atmospheric vapor pressure (millibars), these last two being dependent on air temperature. This equation is itself a reasonable approximation of potential evapotranspiration (Dunne and Leopold 1978), but Penman (1948) went further and modified it to account for incoming radiation and the heat required to vaporize water (latent heat of vaporization):

$$E = (sR/L + \gamma\ Ea)/(s + \gamma) \quad , \tag{6}$$

where R is incoming radiation [$cal \bullet (cm^{-2}) \bullet d^{-1}$], L is latent heat of vaporization (590 $cal \bullet g^{-1}$), s is the slope of the relation between temperature and saturation vapor pressure, and γ is the psychrometric constant (0.66 $millibars \bullet {}^{\circ}C^{-1}$).

Perhaps the most widely used method of calculating evapotranspiration is that of Thornthwaite and Mather (1957). Unlike Penman's approach it uses easily obtainable data on monthly rainfall and temperature, latitude, and soil field-moisture capacity to predict actual evapotranspiration. Because of its low data requirements and high correlations with ecosystem processes such as net primary production (Rosenzweig 1968) and decay rates (Meentemeyer 1978), it is an attractive method for modeling site water status in an ecosystem context.

In this method air temperature is assumed to be an index of energy that drives potential evapotranspiration. The equation describing this is empirical and based on a standard month of 360 h of daylight. Correction is made for months of different lengths and the length of each day, which varies with latitude and season.

When monthly potential evapotranspiration is less than monthly precipitation, no demand is made on soil water, and the excess is assumed to runoff or drain. However, when precipitation is less than the potential demand, the difference is partly supplied by soil water storage. Thornthwaite and Mather (1957) assume that the ability of the soil to meet potential demand during a given month is negatively related to the accumulated potential demand up to that month and positively related to soil field-moisture capacity. Pastor and Post (1984) summarize this relationship in a negative exponential equation.

The balance between rainfall accretions to and evapotranspiration losses from soil moisture is integrated over the year, minus losses to runoff, to determine the moisture present in the soil. This integration

is performed by a monthly updating of the soil water. Rain falling on a soil not already saturated is added to soil water. If the soil is saturated, this additional rain is lost as runoff or subsurface flow.

1.3 SOIL PROPERTIES AND TREE GROWTH

Since the 1930s there have been numerous attempts to relate tree growth to soil parameters. Most of these are the "soil-site studies" or "soil-site equations" (see Carmean 1975 for a review). These studies commonly use multiple regressions to relate some measure of tree growth, usually site index, to numerous, indiscriminantly collected measures of soil fertility, such as topography, aspect, texture, base saturation, pH, etc. These measures often have no experimentally substantiated relation to tree growth. The value of these equations is to determine site suitability for planting or reforestation.

Fertilizer trials provide more biologically realistic data with which to model tree growth in relation to nutrient availability. For example, the slash pine ecosystem model of Cropper and Ewel (1983) relates growth rates to phosphorus fertilizer additions. Ingestad et al. (1981) introduce the concept of nitrogen productivity (grams carbon fixed per unit nitrogen available), a measure of nitrogen-use efficiency, to relate Scots pine growth to fertilizer or mineralized nitrogen. Both of these models relate whole forest production rather than individual tree growth to nutrient availability.

In a classic fertilizer study Mitchell and Chandler (1939) showed that the relationship between foliar percent of nitrogen and relative

soil nitrogen availability (AVLMC) for many eastern hardwoods can be described by a Mitscherlich equation

$$\%N = a[1.0 - 10.0^{-c(b + AVLMC)}] \quad (7)$$

and that, all other things being equal, relative diameter growth is linearly related to foliar percent of nitrogen:

$$SNGF = d + e(\%N) \quad , \quad (8)$$

where SNGF is an available soil nitrogen growth factor. Foliar percent of nitrogen is, therefore, assumed to be a physiological index of plant nutrient status. These parameters (a,b,c,d, and e) can each take on one of three values (Aber et al. 1979), depending on whether a species is tolerant, intolerant, or intermediately tolerant of low nitrogen availability. Nitrogen-intolerant species cannot survive under low nitrogen availability but grow rapidly under high nitrogen availability (e.g., basswood and ash). Some early successional species are also classified as nitrogen intolerant because of their rapid growth when nitrogen availability is high immediately after disturbance (Marks 1974). Nitrogen-tolerant species (e.g., most conifers and some oaks) survive under low nitrogen availability but do not grow as rapidly under high nitrogen availability as nitrogen-intolerant species. Species of intermediate nitrogen tolerance fall between these two extremes and include some oaks, hickories, sugar maple, etc.

Weinstein et al. (1982) also base their soil-nutrient availability multiplier on the general shape of Mitchell and Chandler's curves. The

model of Weinstein et al. (1982) relates relative growth reductions to the ratio between predicted nutrient availability and nutrient requirements, assuming that a tree is limited only by light, water, or degree days. This is similar to the effects of soil nitrogen availability on Douglas fir growth modeled by Kimmins and Scoullar (1979). Such a model is potentially unstable because forcing growth and nutrient uptake to match predicted nutrient availability results in less litter return and, therefore, less nitrogen availability in subsequent years. The model potentially can enter a pathological feedback loop leading eventually to zero growth; Kimmins and Scoullar (1979) introduce damping mechanisms to prevent this.

Available soil moisture is also an important variable in determining the growth rates of forest trees. Reduced growth due to unfavorable soil water conditions contributes to mortality of established trees, either indirectly due to loss of competitive ability or directly due to physiological collapse. Because each tree species responds differently to the amount of available moisture, moisture is important in determining forest composition.

The deleterious effects of drought stress on the growth of plants have been the subject of much research (Hsiao 1973, Hinckley et al. 1978). Growth reductions have been noted at soil moisture tensions as slight as -1×10^5 Pa (Stransky and Wilson 1964). Cell growth is affected at less than a 1×10^5 Pa drop in tissue water potential (Hsiao 1973). Water stresses in plants are difficult to evaluate in the field by leaf water potential or other direct methods (Zahner and

Stage 1966, Morrow and Slatyer 1971, Sucoff 1972, Federer and Gee 1976, Reich and Hinckley 1980). Measurement and prediction of drought stress are difficult because of temporal and spatial variance of water potential within a tree (Hinckley et al. 1978) or within a stand of trees. Also, the relationship between soil water tension and leaf water potential is not known with sufficient detail for most species of trees.

Several convenient indirect methods have been proposed. For example, Basset (1964) presents an index of soil moisture availability that is closely related to tree growth measurements in a southern pine forest. This index, "no-growth days," involves calculations that are of the appropriate scale and detail for our purposes. A no-growth day is defined as a day during which the mean moisture tension reaches or exceeds -4×10^5 Pa. Basal area growth is assumed to be negligible on a no-growth day, and reductions in basal area growth are linearly related to the number of "no growth" days in a growing season, which may be computed from monthly rainfalls and temperature and soil water-holding characteristics.

2. GENERAL APPROACH AND MODEL STRUCTURE

This section is a brief description of the model for users who do not wish to go through the code in detail, as described in the next section.

The model was developed to explore relationships between long-term stand dynamics and nutrient cycling as constrained by climate and soil moisture (Fig. 1). To this end, the requirements for this model are:

1. run on a yearly time step to be compatible with a JABOWA class forest production model,
2. use readily available data, and
3. predict soil nitrogen and water availability and organic matter decomposition in enough detail for computer experiments but not so much detail that the program is expensive to run and the data difficult to obtain.

Accordingly, we decided to combine some of the features of the decomposition models of Weinstein et al. (1982) and Aber et al. (1982) and incorporate more recent field data on nitrogen mineralization and decomposition (Pastor et al. 1984, McClaugherty et al. 1985, Berg et al. 1985). We added decomposition and soil-water subroutines to a model parameterized for 72 upland tree species in eastern North America (Solomon et al. 1984), which, in turn, is based on the models of Botkin et al. (1972) and Shugart and West (1977). Figure 2 is a schematic flow-chart of the present model.

Incoming sunlight is the driving variable. Soil organic matter and nitrogen contents are initial site conditions that can change as a

ORNL-DWG 84-15321

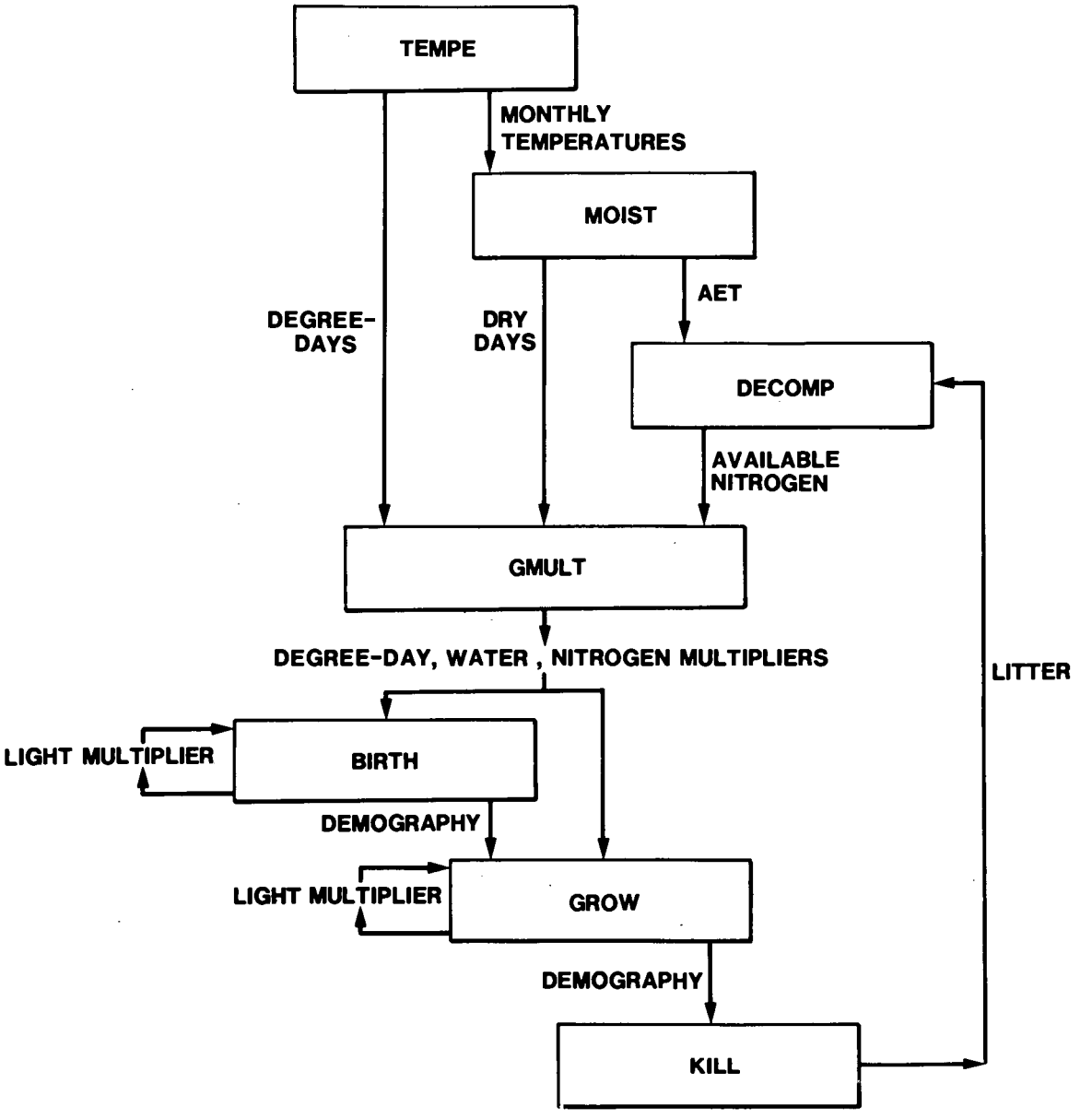

Fig. 2. Schematic flow diagram of the model. Subroutines are in boxes and capital letters associated with arrows refer to variables and arrays in the FORTRAN code (Appendix A).

result of litter input. Monthly rainfall and temperature vary stochastically about mean values and, along with the fixed constraints of soil-field-moisture capacity and wilting point, determine available moisture. Degree days and the availabilities of light and water constrain species reproduction. These, plus nitrogen availability, also constrain tree growth. Competition is implicit in the different ways species affect and respond to resource availabilities. Important feedbacks in the model are: (1) that the growth and maintenance of the canopy determines light availability to each tree, which, in turn, affects the establishment and growth of new trees and (2) that soil nitrogen availability affects tree growth, which, in turn, affects decomposition through the amount and type of litter returned to the soil.

The birth, growth, and death of all trees greater than 1.43-cm diameter at breast height (dbh) on a circular 1/12-ha plot are simulated. This plot size corresponds to the average gap size created by a dominant tree in eastern North American forests when it dies and falls over (Shugart and West 1979).

Site data that the user needs to provide include:

1. latitude for making sun-angle corrections,
2. days of the year the growing season begins and ends (last and first killing frost),
3. monthly mean temperatures (°C) and precipitation (cm) and their standard deviations,
4. soil field-moisture capacity and wilting point in cm (Fig. 3), and
5. initial soil organic matter and nitrogen contents ($Mg \bullet ha^{-1}$).

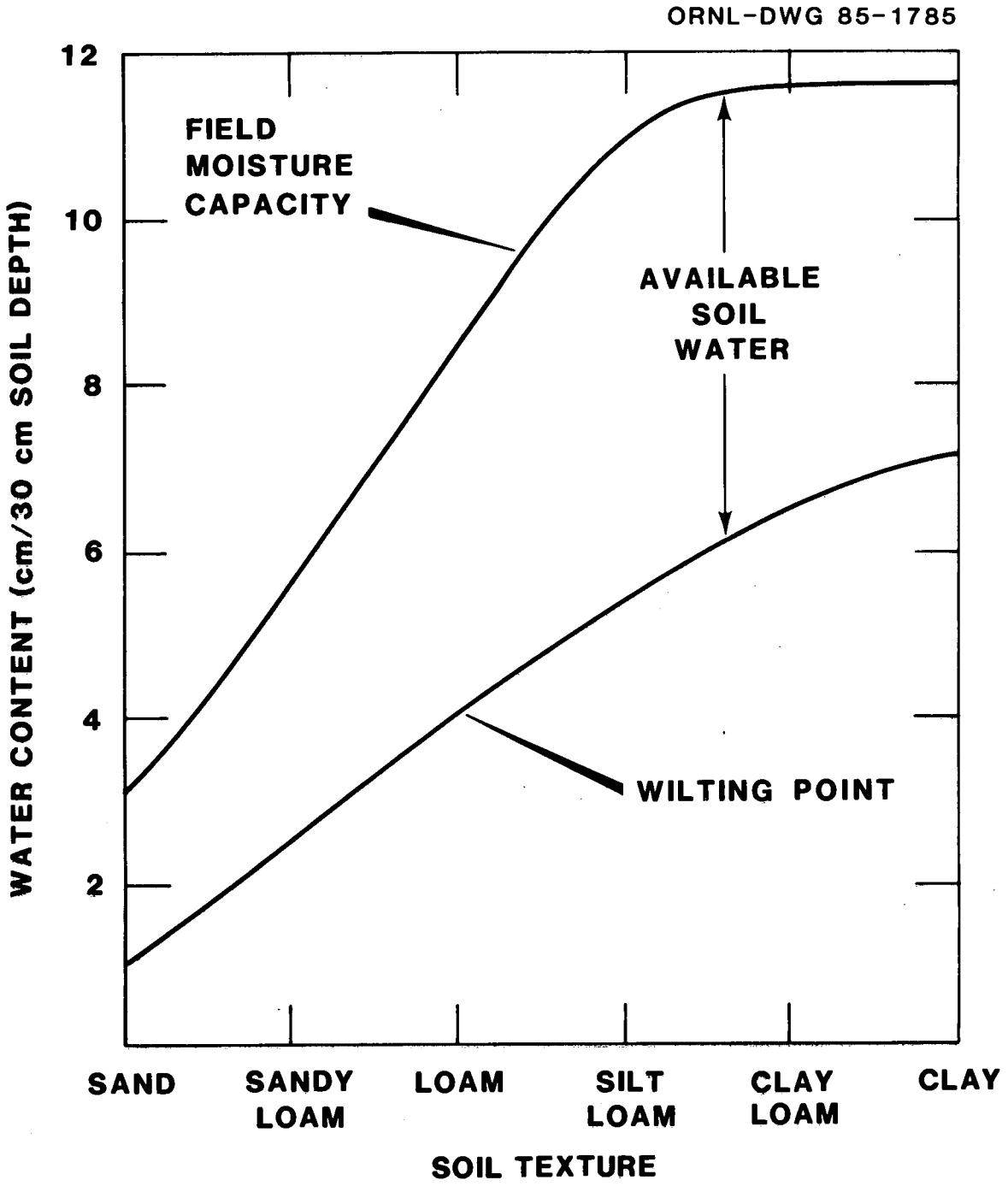

Fig. 3. Soil field moisture capacities and wilting points in relation to soil texture.

Run parameters defined by the user include number of years, number of plots, and output interval. All species and decomposition parameters are provided as input card images as part of the FORTRAN code.

The basic structure of the model is a set of three subroutines (TEMPE, MOIST, DECOMP) that determine site conditions (degree days, available soil water, and available soil nitrogen, respectively) and a set of three demographic subroutines (BIRTH, GROW, KILL) that calculate tree growth and population dynamics (Fig. 2). These two sets of subroutines are linked by a subroutine (GMULT) that converts degree days, soil water, and soil nitrogen availability into growth multipliers. The amount of light available to each tree, an additional site characteristic, is a function of the forest canopy structure and is modeled in both BIRTH and GROW. The main program calls the site subroutines first; uses the site conditions to determine the birth, growth, and death of individual trees; and returns litter to the soil for decay the following year.

Subroutine MOIST (Mann and Post 1980 - see Appendix 3) calculates soil water availability and actual evapotranspiration by the method of Thornthwaite and Mather (1957). These statistics influence tree growth and decay rates, respectively, and are computed using monthly temperature and precipitation data and parameters describing soil water-holding capacity. Monthly rainfall is chosen from a normal distribution with a specified mean and specified standard deviation for each month. Monthly temperatures, also normally distributed around specified means, are supplied by subroutine TEMPE, which also

calculates annual growing-degree days used in subroutine GROW, ensuring compatibility with the temperatures used in MOIST.

Subroutine DECOMP recognizes two categories of soil organic matter: that which is immobilizing nitrogen (yearly cohorts of litter) and that which is mineralizing nitrogen (humus). Decomposition of both is a function of AET, predicted by MOIST; litter chemistry; and degree of canopy closure. Each species is assigned 1 of 12 types of leaf litter in order of increasing lignin:nitrogen ratio and, therefore, decreasing decay rates. The decay of twig, root, and woody litter is assumed to be the same for all species. Nitrogen equivalents and critical percent of nitrogen of the litter cohorts are predicted using the approach of Aber and Melillo (1980, 1982a; Eq. 4; Appendix 2). Changes in lignin concentrations of litter cohorts are predicted in a similar way (Appendix 2). The decay of individual litter cohorts is followed as long as they immobilize nitrogen. When they reach their specified critical percent of nitrogen, mineralization begins, and the material is transferred to the humus pool. Nitrogen mineralization from humus is a function of the amount of humus and litter N:C ratios (Pastor et al. 1984), degree of canopy closure, and a scaling factor that relates the model's predicted AET to that of the study site of Pastor et al. (1984).

The entrance of trees in BIRTH is determined by their fecundity, degree days, amount of light at the forest floor, and soil water availability. In GROW, multipliers are used to predict diameter growth from degree days (Botkin et al. 1972), light (Shugart and West 1977),

and available nitrogen (Mitchell and Chandler 1939, Aber et al. 1978). Soil-moisture growth multipliers were developed to link diameter growth to soil water availability (Appendix 3). The growth multiplier having the lowest value decreases diameter growth from optimal values. In KILL, a tree dies for two reasons: (1) age-dependent mortality, in which the probability of dying in a given year increases as the tree approaches the maximum age for the species, and (2) age-independent mortality, in which the probability of death is greater if the tree's diameter growth is less than a specified amount for two consecutive years. Leaf-litter production is calculated using allometric relationships between diameter, crown area, and leaf weight per unit of crown area (Aber and Melillo 1982b). Wood litter from dead trees and root litter are also calculated. Litter is returned to the soil at the end of each year and decays the following year.

3. USER'S GUIDE TO THE COMPUTER CODE

Since this is an expansion of a model developed over many years by many people, a complete description of the entire model is beyond the scope of this paper. While we will attempt to explain the changes we made in the context of the entire model, the reader is referred to Botkin et al. (1972), Shugart and West (1977), Solomon et al. (1981, 1984), Aber and Melillo (1982b), and Shugart (1984) for documentation of earlier versions. Subroutines MOIST and DECOMP will be described in greatest detail. Appendix A contains the FORTRAN code for the model, beginning with the main program and followed by subroutines listed in alphabetical order. The reader should refer to it to understand the following description. Unless otherwise noted, all biomass, carbon, and nitrogen pools are in $Mg \bullet ha^{-1}$, and flows are in $Mg \bullet ha^{-1} \bullet yr^{-1}$ per year.

3.1 MAIN PROGRAM

The main program establishes the common blocks used in all subroutines, provides seeds used in the random-number generators, and calls subroutines in order of execution. All calculations of biological interest are handled in various subroutines. Arrays and variables used throughout the model and passed between subroutines are arranged in common blocks described in Tables 1 and 2.

The main program begins by providing the seeds used in the random-number generator for the stochastic predictions. Subroutine INPUT is called to read-in run, species, and decomposition parameters. At the beginning of each plot simulation, subroutine PLOTIN initializes

Table 1. Variables in COMMON blocks

Variable	Units	Definition
AAA		Alphanumeric species names
AET	cm	Actual evapotranspiration
AGEMX	Years	Maximum age of each species
AVAILN	$Mg \cdot ha^{-1}$	Available nitrogen to trees in current year
AWP	$Mg \cdot ha^{-1} \cdot yr^{-1}$	Aboveground woody production
B2		Growth scaling parameter
B3		Growth scaling parameter
BASESC	$Mg \cdot ha^{-1}$	Initial humus weight
BASESN	$Mg \cdot ha^{-1}$	Initial humus nitrogen
BGS		Julian day of the year growing season begins
C		Current status of all litter cohorts
CM1,..,CM5		Parameters for nitrogen growth multipliers
D3		Drought tolerance (fraction of growing season)
DBH	cm	Diameter of each tree
DEGD		Degree days for current year
DEGDGF		Degree day growth for each species
DMAX		Degree day maximum for each species
DMIN		Degree day minimum for each species
DRY	cm	Soil wilting point
DTEMP		Temporary diameter sorting array
EGS		Julian day of the year growing season ends
FC	cm	Soil field moisture capacity
FDAT		Litter quality parameters
FF	$Mg \cdot ha^{-1}$	Forest-floor weight and nitrogen content
FJ	Percent	Fraction of growing season soil is below wilting point
FROST	°C	Minimum January temperature tolerated
FRT	Years	Foliage retention time
FWT	$100g \cdot m^{-2}$	Leaf weight per unit crown area
G	cm	Scalar for species maximum diameter increment
HCN		Humus carbon-nitrogen ratio in current year
IAGE	Years	Age of each tree
IPOLAT		Number of break points in climate data interpolation
ITEMP		Temporary array for sorting tree ages
ITOL		Shade tolerance code for each species
KLAST		Number of plots to be simulated
KPRNT		Output print interval
KSPRT		Indicates dead trees eligible to sprout
KWRITE		Output control
MPLANT		Maximum seeding in rate per plot
NCOHRT		Number of cohorts currently in array C
NEW		Indicates species eligible to sprout
NEWTR		Indicates species eligible to seed in
NMAX		Output control
NOGRO		Record of trees below minimum growth for current year
NSPEC		Number of species
NTEMP		Temporary sorting array for NOGRO
NTOT		Current number of trees in simulation
NTREES		Array of the number of trees of each species
NWRITE		Output control
NYEAR		Total number of years in simulation
PLAT	Degrees N or S	Latitude of plot
R	cm	Interpolated rainfall means for current year
RSAV	cm	Rainfall means by month
RT	cm	Current monthly temperatures
RTST		Root-shoot ratio for each species
SCO2	$Mg \cdot ha^{-1}$	Soil carbon dioxide evolution in current year
SLTA		Parameter to calculate crown area from diameter
SLTB		Parameter to calculate crown area from diameter
SMGF		Soil moisture growth factor for each species
SNGF		Soil nitrogen growth factor for each species
SPRTMN		Minimum diameter for a stump to sprout
SPRTMX		Maximum diameter for a stump to sprout
SPRTND		Number of sprouts per stump
SUMLA	$g \cdot plot^{-1}$	Vertical distribution of leaf biomass
SWITCH		Reproduction switches
SWTCH		Reproduction switches
T	°C	Interpolated mean monthly temp for current year
TL		Leaf litter quality class
TSAV	°C	Temperature means by month
TYL	$Mg \cdot ha^{-1}$	Amount of litter in current year
USEED		Random number seeds
VR	cm	Interpolated monthly rainfall standard deviations for current year
VRSAV	cm	Rainfall standard deviations by month
VT	°C	Interpolated monthly temperature standard deviations for current year
VTSAV	°C	Temperature standard deviations by month
X	Years	Years in which climate changes

Table 2. Common block communication between subroutines

Common block[a]	Subroutine											
	MAIN	BIRTH	DECOMP	GMULT	GROW	INPUT	KILL	LININT	MOIST	OUTPUT	PLOTIN	TEMPE
CONST	*	*		*	*	*	*		*	*	*	
COUNT	*	*			*	*	*		*	*		
DCMP	*	*	*	*		*	*			*	*	
DEAD	*	*			*		*				*	
FOREST	*	*			*					*	*	
GMULT	*	*		*	*							
INTERP	*					*		*				
LINEAR	*					*		*				
PARAM	*	*		*	*	*	*			*		
PROD	*				*		*		*			
SEED	*	*					*			*		*
TEMP	*	*			*		*					
WATER	*	*	*	*	*	*			*	*		*

[a]Variables in common blocks:

CONST:NSPEC,DEGD
COUNT:NTOT,NYEAR,KPRNT,NMAX,KLAST,NWRITE,KWRITE
DCMP:AVAILN,TYL,C,FDAT,FF,NCOHRT,HCN,BASESC,BASESN,SCO2,TYLN
DEAD:NOGRO,NTEMP
FOREST:NTREES,DBH,IAGE,KSPRT,NEWTR,SUMLA,NEW,SWITCH
GMULT:SMGF,SNGF,DEGDGF
INTERP:IPOLAT,X
LINEAR:TSAV,VTSAV,RSAV,VRSAV
PARAM:AAA,DMAX,DMIN,B3,B2,ITOL,AGEMY,G,SPRIND,SPRTMN,SPRTMX,SWITCH,MPLANT,D3,FROST,TL,CM1,CM2,CM3,CM4,CM5,
FWT,SLTA,SLTB,RTST,FRT
PROD:AWP
SEED:USEED
TEMP:DTEMP,ITEMP
WATER:T,VT,RT,R,VR,FC,DRY,BGS,EGS,PLAT,FJ,AET

the demographic arrays and the litter cohort array to zero and the humus weight and nitrogen content to specified starting values.

The DO-50 loop is the main loop for each plot simulation over NYEAR amount of years. The three site subroutines (TEMPE, MOIST, and DECOMP) are called first. Each of these provides data for the succeeding subroutines, so this order is crucial. Subroutine GMULT converts degree days, number of days below soil wilting point, and soil nitrogen availability (calculated in TEMPE, MOIST, and DECOMP, respectively) into growth multipliers. Next, the demographic subroutines (BIRTH, GROW, and KILL) are called to simulate birth, growth, and death of up to 1500 stems, as influenced by the site conditions. Litter amounts are calculated in KILL, returned to the soil, and decayed next year in DECOMP.

3.2 SUBROUTINE INPUT

This subroutine reads run control parameters, soil water retention data, climate data, individual species data required to calculate tree growth in relation to environmental conditions, and parameters needed to calculate decay of various litter types. Various run-control parameters include the number of plots to simulate (KLAST), the number of years simulated per plot (NYEAR), and the print interval in years for output to be sent to tape, printer, etc. (KPRNT). NMAX and NWRITE (counters used in OUTPUT) are calculated from these.

Plot latitude (PLAT), plot longitude (PLONG), days of the year the growing season begins (BGS) and ends (EGS), field-moisture capacity (FC in centimeters), and wilting point (DRY in centimeters) are read next. IPOLAT is the number of break points in the climate arrays. The

X array is the years in which these break points occur and between which linear interpolations will be made simulating climatic change during intervening years. Mean monthly temperatures (°C) and standard deviations and mean monthly precipitation inputs (cm) and standard deviations are read into arrays TSAV, VTSAV, RSAV, and VRSAV, respectively. If any of these climatic attributes is to be held constant, two identical lines should be read into the respective array. If climatic change is simulated, each line may contain different data corresponding to different years in X.

Species parameters (Table 3) are read in next, followed by decomposition parameters. NLVAR and NLT are the number of litter-decay variables and number of litter types, respectively, and are used as counters for reading decomposition parameters into array FDAT. The columns of FDAT hold the following information on the 12 leaf litter types, root litter, fresh wood, twigs, and well decayed wood (Table 4; see also Appendix B):

1. The weight of an incoming cohort of litter (initialized to zero).
2. Initial percent of nitrogen.
3. Grams of nitrogen immobilized per gram weight loss.
4. Critical percent of nitrogen.
5. Litter type: 1 through 12 are the 12 leaf-litter types in order of decreasing decay rate and increasing nitrogen-immobilization rate and correspond to species parameter TL. Thirteen is root litter. Fourteen and fifteen are fresh wood from trees less than or greater than 10 cm dbh, respectively. Sixteen is twig litter. Seventeen is well-decayed wood not yet humus.

Table 3. Tree species parameters for model input

AAA D3	FROST	TL	CM1	CM2	DMAX CM3	DMIN CM4	B3 CM5	B2 FWT	ITOL SLTA	AGEMX SLTB	G RTST	SPRTND FRT	SPRTMN	SPRTMX	SWITCH	MPLANT	NUM
ABIES BALSAMEA					2386.	560.	0.5452	54.52	1	200.	68.85	0.	0.0	0.	FFTFF	8	1
0.165	-25.	10.	2.79	219.77	0.00179	-0.3	0.6	440.	0.804	0.069	1.0	3.					
ABIES FRASERI					2763.	2663.	0.3363	67.26	2	200.	152.40	0.	0.0	0.	FFTFF	8	2
0.025	-7.	10.	2.79	219.77	0.00179	-0.3	0.6	440.	0.804	0.069	1.0	3.					
ACER RUBRUM					6600.	1260.	0.2863	57.26	2	150.	176.10	3.	12.0	200.	FTTTF	100	3
0.230	-18.	2.	2.79	219.77	0.00179	-0.3	0.6	440.	0.814	0.078	1.0	1.					
ACER SACCHARINUM					4700.	1600.	0.1988	47.72	2	125.	212.30	1.	6.0	50.	FTTFT	20	4
0.268	-12.	2.	2.79	219.77	0.00179	-0.3	0.6	440.	0.814	0.078	1.0	1.					
ACER SACCHARUM					3100.	1222.	0.1272	38.17	1	300.	88.98	3.	12.0	80.	FFTFF	140	5
0.080	-18.	2.	2.94	117.52	0.00234	-0.5	0.5	440.	0.814	0.078	1.0	1.					
BETULA LENTA					3066.	1402.	0.3490	52.35	1	265.	71.00	3.	12.0	100.	FTTTF	20	6
0.177	-2.	4.	2.94	117.52	0.00234	-0.5	0.5	248.	0.804	0.069	0.8	1.					
CARYA CORDIFORMIS					5076.	1910.	0.2863	57.26	1	300.	88.05	1.	12.0	200.	TFTFF	20	7
0.320	-12.	4.	2.94	117.52	0.00234	-0.5	0.5	248.	0.804	0.069	0.8	1.					
CARYA GLABRA					6960.	1910.	0.2863	57.26	1	300.	88.05	2.	12.0	200.	TFTFF	20	8
0.200	-7.	4.	2.94	117.52	0.00234	-0.5	0.5	248.	0.804	0.069	0.8	1.					
CARYA LACINIOSA					4615.	2493.	0.2863	57.26	1	300.	88.05	2.	12.0	90.	TFTFF	20	9
0.220	-4.	4.	2.94	117.52	0.00234	-0.5	0.5	248.	0.804	0.069	0.8	1.					
CARYA OVATA					5500.	1670.	0.2863	57.26	1	275.	96.05	1.	12.0	200.	TFTFF	20	10
0.200	-7.	4.	2.94	117.52	0.00234	-0.5	0.5	248.	0.804	0.069	0.8	1.					
CARYA TEXANA					5076.	2660.	0.2863	57.26	1	300.	88.05	2.	12.0	110.	TFTFF	20	11
0.478	-1.	4.	2.94	117.52	0.00234	-0.5	0.5	248.	0.804	0.069	0.8	1.					
CARYA TOMENTOSA					5993.	1910.	0.2663	53.26	1	300.	82.63	1.	12.0	200.	TFTFF	20	12
0.300	-4.	4.	2.94	117.52	0.00234	-0.5	0.5	248.	0.804	0.069	0.8	1.					
CASTANEA DENTATA					4571.	1910.	0.1495	44.84	1	300.	102.60	3.	12.0	200.	TFFFF	20	13
0.300	-2.	2.	2.99	207.43	0.00175	-1.7	1.0	440.	0.814	0.078	1.0	1.					
CELTIS LAEVIGATA					6960.	2660.	0.5090	75.35	1	200.	131.00	2.	6.0	115.	TFFFF	20	14
0.085	-1.	2.	2.99	207.43	0.00175	-1.7	1.0	440.	0.814	0.078	1.0	1.					
CORNUS FLORIDA					5993.	1910.	1.3800	69.04	1	100.	92.60	3.	12.0	200.	FFTFF	20	15
0.250	-4.	1.	2.99	207.43	0.00175	-1.7	1.0	440.	0.814	0.078	1.0	1.					
FAGUS GRANDIFOLIA					5537.	1326.	0.2863	57.26	1	366.	72.17	2.	6.0	30.	FFTFF	40	16
0.200	-12.	8.	2.94	117.52	0.00234	-0.5	0.5	440.	0.904	0.095	1.0	1.					
FRAXINUS AMERICANA					5993.	1398.	0.2863	57.26	1	300.	88.05	2.	6.0	20.	FTTTF	40	17
0.280	-12.	2.	2.99	207.43	0.00175	-1.7	1.0	440.	0.428	0.074	1.0	1.					
FRAXINUS NIGRA					2261.	1000.	0.2363	47.26	2	300.	74.51	2.	6.0	20.	FFFTT	40	18
0.022	-18.	2.	2.99	207.43	0.00175	-1.7	1.0	440.	0.428	0.074	1.0	1.					

Table 3 (continued)

AAA	D3	FROST	TL	CM1	CM2	DMAX	DMIN	CM3	CM4	B3	CM5	B2	FWT	ITOL	SLTA	AGEMX	SLTB	G	RTST	SPRTND	FRT	SPRTMN	SPRTMX	SWITCH	MPLANT	NUM
FRAXINUS PENNSYLVANICA	0.114	-23.	2.	2.99	207.43	5482.	1050.	0.00175	-1.7	0.2863	1.0	57.26	440.	2	0.428	150.	0.074	176.00	1.0	1.	1.	6.0	50.	FTFFF	40	19
PRUNUS PENSYLVANICA	0.160	-23.	3.	2.79	219.77	2500.	560.	0.00179	-0.3	1.2600	0.6	70.60	173.	2	0.729	30.	0.044	200.00	0.5	0.	1.	0.0	0.	FFFFF	600	20
JUGLANS CINEREA	0.200	-12.	9.	2.94	117.52	3267.	1870.	0.00234	-0.5	0.2863	0.5	57.26	440.	2	0.428	100.	0.074	264.10	1.0	1.	1.	6.0	12.	FTTFF	20	21
JUGLANS NIGRA	0.300	-8.	9.	2.94	117.52	4571.	1910.	0.00234	-0.5	0.1495	0.5	44.84	440.	2	0.428	250.	0.074	123.10	1.0	1.	1.	6.0	20.	TFTFT	20	22
JUNIPERUS VIRGINIANA	0.397	-10.	6.	2.79	219.77	5537.	1721.	0.00179	-0.3	0.3312	0.6	49.68	440.	2	0.804	300.	0.069	50.32	1.0	2.	0.	0.0	0.	FTFFT	20	23
LIQUIDAMBAR STYRACIFLUA	0.300	-1.	2.	2.99	207.43	5993.	2660.	0.00175	-1.7	0.2152	1.0	53.81	440.	2	0.814	250.	0.078	122.60	1.0	1.	2.	12.0	80.	FFFTF	20	24
LIRIODENDRON TULIPIFERA	0.160	-2.	2.	2.99	207.43	5993.	2300.	0.00175	-1.7	0.1495	1.0	44.84	440.	2	0.814	300.	0.078	102.60	1.0	1.	2.	12.0	200.	FTFFT	400	25
CARPINUS CAROLINIANA	0.300	-12.	9.	2.99	207.43	6011.	1344.	0.00175	-1.7	1.3800	1.0	69.04	173.	1	0.729	150.	0.044	51.74	0.5	1.	2.	6.0	70.	FFFFF	20	26
PICEA GLAUCA	0.309	-30.	11.	2.79	219.77	1911.	280.	0.00179	-0.3	0.7105	0.6	90.96	440.	1	0.804	200.	0.069	132.30	1.0	3.	0.	0.0	0.	FFFFF	8	27
PICEA MARIANA	0.270	-30.	11.	2.79	219.77	1911.	247.	0.00179	-0.3	1.1600	0.6	93.15	440.	1	0.804	250.	0.069	70.49	1.0	3.	1.	10.0	20.	FFTFF	8	28
PICEA RUBENS	0.237	-12.	11.	2.79	219.77	2562.	1247.	0.00179	-0.3	0.2912	0.6	58.23	440.	1	0.804	300.	0.069	89.34	1.0	3.	0.	0.0	0.	FTTFF	8	29
PINUS BANKSIANA	0.411	-30.	12.	2.79	219.77	2216.	830.	0.00179	-0.3	0.9452	0.6	94.52	440.	2	0.804	150.	0.069	145.50	1.0	2.	0.	0.0	0.	FFTTF	140	30
PINUS ECHINATA	0.423	-1.	12.	2.79	219.77	5076.	2660.	0.00179	-0.3	0.2863	0.6	57.26	440.	2	0.804	300.	0.069	88.05	1.0	2.	2.	5.0	20.	FTFFF	20	31
PINUS RESINOSA	0.385	-20.	12.	2.79	219.77	2035.	1100.	0.00179	-0.3	0.4201	0.6	63.01	440.	2	0.804	310.	0.069	71.44	1.0	2.	0.	0.0	0.	FTTFF	140	32
PINUS STROBUS	0.310	-20.	12.	2.79	219.77	3165.	1100.	0.00179	-0.3	0.1495	0.6	44.84	440.	2	0.804	450.	0.069	68.37	1.0	2.	0.	0.0	0.	TTTFF	140	33
PINUS TAEDA	0.360	4.	12.	2.79	219.77	5993.	3165.	0.00179	-0.3	0.2912	0.6	58.23	440.	2	0.804	250.	0.069	107.20	1.0	2.	0.	0.0	0.	FTFFF	500	34
PINUS VIRGINIANA	0.226	-3.	12.	2.79	219.77	3671.	2660.	0.00179	-0.3	0.5452	0.6	54.52	440.	2	0.804	250.	0.069	55.08	1.0	2.	0.	0.0	0.	FTFFT	350	35
PLATANUS OCCIDENTALIS	0.120	-7.	5.	2.94	117.52	5482.	1926.	0.00234	-0.5	0.1098	0.5	38.43	440.	2	0.904	500.	0.095	61.74	1.0	1.	2.	6.0	50.	FTTFT	20	36
QUERCUS ALBA	0.330	-12.	5.	2.94	117.52	5537.	1721.	0.00234	-0.5	0.3363	0.5	67.26	440.	1	0.904	400.	0.095	76.19	1.0	1.	2.	12.0	40.	TFFFF	40	37

Table 3 (continued)

```
AAA                                DMAX   DMIN     B3     B2   ITOL AGEMX    G  SPRTND SPRTMN SPRTMX SWITCH MPLANT NUM
 D3 FROST TL   CM1     CM2     CM3     CM4  CM5   FWT   SLTA  SLTB RTST FRT
QUERCUS COCCINEA            4571. 2037. 0.4201 63.01     1  400.  55.37    2.  12.0    80.   TFFFF   30    38
0.286  -7.  5. 2.79 219.77 0.00179 -0.3 0.6 440. 0.904 0.095 1.0   1.
QUERCUS FALCATA             5993. 2660. 0.3363 67.26     1  400.  76.19    2.  12.0    30.   TFFFF   20    39
0.423   2.  9. 2.94 117.52 0.00234 -0.5 0.5 440. 0.904 0.095 1.0   1.
QUERCUS LYRATA              5315. 2926. 0.3692 59.08     2  250.  88.78    1.   6.0    12.   TTTTF   20    40
0.031   4.  5. 2.79 219.77 0.00179 -0.3 0.6 440. 0.904 0.095 1.0   1.
QUERCUS MARILANDICA         5537. 2493. 0.5452 54.52     2  400.  34.00    2.  12.0    40.   FFFFF   20    41
0.422  -1.  9. 2.79 219.77 0.00179 -0.3 0.6 440. 0.904 0.095 1.0   1.
QUERCUS NUTTALLII           5260. 3371. 0.4201 63.01     2  250.  88.59    1.   6.0    12.   TFTFF   20    42
0.030   4.  9. 2.79 219.77 0.00179 -0.3 0.6 440. 0.904 0.095 1.0   1.
QUERCUS PRINUS              4110. 1910. 0.2863 57.26     1  267.  98.93    2.  12.0    40.   TFFFF   20    43
0.285  -7.  9. 2.79 219.77 0.00179 -0.3 0.6 440. 0.904 0.095 1.0   1.
QUERCUS RUBRA               4571. 1100. 0.2863 57.26     1  400.  66.03    2.  12.0    40.   TFFFF   40    44
0.225 -17.  9. 2.94 117.52 0.00234 -0.5 0.5 440. 0.904 0.095 1.0   1.
QUERCUS SHUMARDII           5993. 2493. 0.3363 67.26     2  300. 101.60    2.  12.0   160.   FTFFF   20    45
0.484  -3.  9. 2.79 219.77 0.00179 -0.3 0.6 440. 0.904 0.095 1.0   1.
QUERCUS STELLATA            5993. 2660. 0.4201 63.01     2  400.  55.37    2.  12.0    30.   TFFFF   20    46
0.555  -4.  5. 2.79 219.77 0.00179 -0.3 0.6 440. 0.904 0.095 1.0   1.
QUERCUS VELUTINA            5076. 1810. 0.2863 57.26     1  300.  88.05    2.  12.0    40.   FTFFF   30    47
0.300 -10.  9. 2.79 219.77 0.00179 -0.3 0.6 440. 0.904 0.095 1.0   1.
TILIA AMERICANA             3137. 1400. 0.2863 57.26     1  140. 188.70    3.  12.0    80.   FFFTF   30    48
0.200 -17.  2. 2.99 207.43 0.00175 -1.7 1.0 440. 0.814 0.078 1.0   1.
TILIA HETEROPHYLLA          4571. 2660. 0.2863 57.26     1  150. 176.10    3.  12.0    80.   FTTFF   20    49
0.211  -1.  2. 2.99 207.43 0.00175 -1.7 1.0 440. 0.814 0.078 1.0   1.
TSUGA CANADENSIS            3800. 1324. 0.1495 44.84     1  650.  47.00    0.   0.0     0.   FFTTF    8    50
0.180 -12.  6. 2.79 219.77 0.00179 -0.3 0.6 440. 0.804 0.069 1.0   3.
ULMUS ALATA                 5993. 2660. 0.3312 49.68     2  125. 144.80    1.   6.0   110.   FFFFF   20    51
0.300   2.  5. 2.79 219.77 0.00179 -0.3 0.6 440. 0.804 0.069 1.0   1.
ULMUS AMERICANA             6960. 1204. 0.3692 59.08     2  300.  73.98    2.   6.0   240.   FFTFF   20    52
0.330 -20.  5. 2.94 117.52 0.00234 -0.5 0.5 440. 0.804 0.069 1.0   1.
AESCULUS OCTANDRA           3671. 2660. 0.2863 57.26     1  100. 264.10    1.  12.0   200.   TFTFF   20    53
0.175  -1.  5. 2.99 207.43 0.00175 -1.7 1.0 440. 0.804 0.069 1.0   1.
BETULA POPULIFOLIA          2880. 1007. 1.3800 69.04     2  250.  37.04    1.  10.0    30.   FTFTF   20    54
0.130 -11.  4. 2.79 219.77 0.00179 -0.3 0.6 248. 0.804 0.069 0.8   1.
BETULA PAPYRIFERA           2036.  484. 0.2363 47.26     2  140. 159.70    1.  10.0    30.   FTTTF  120    55
0.280 -28.  4. 2.79 219.77 0.00179 -0.3 0.6 248. 0.804 0.069 0.8   1.
FRAXINUS QUADRANGULATA      3733. 2246. 0.2863 57.26     2  300.  88.05    2.   6.0    20.   FTFTF   20    56
0.200  -4.  2. 2.99 207.43 0.00175 -1.7 1.0 440. 0.428 0.074 1.0   1.
```

Table 3 (continued)

AAA D3 FROST TL CM1	CM2	DMAX CM3	DMIN CM4	B3 CM5	B2 FWT	ITOL SLTA	AGEMX SLTB	G RTST	SPRTND FRT	SPRTMN	SPRTMX	SWITCH	MPLANT	NUM
LARIX LARICINA	2660.	280.	0.4201	63.01	2	335.	66.11	0.	0.0	0.	FTTTT	8	57
0.267 -29. 12. 2.79	219.77	0.00179	-0.3 0.6	440.	0.804	0.069	1.0	1.					
POPULUS BALSAMIFERA	2491.	555.	0.4201	63.01	2	150.	147.60	3.	20.0	200.	FFTFF	200	58
0.267 -30. 7. 2.79	219.77	0.00179	-0.3 0.6	248.	0.804	0.069	0.5	1.					
POPULUS GRANDIDENTATA	3169.	1100.	0.4201	63.01	2	70.	316.40	2.	2.0	70.	FFFTT	200	59
0.267 -18. 7. 2.79	219.77	0.00179	-0.3 0.6	248.	0.804	0.069	0.5	1.					
POPULUS TREMULOIDES	2461.	743.	0.3668	55.01	2	125.	157.80	3.	20.0	150.	FFFFF	200	60
0.267 -30. 7. 2.79	219.77	0.00179	-0.3 0.6	248.	0.804	0.069	0.5	1.					
QUERCUS MACROCARPA	5153.	1700.	0.3692	59.08	1	300.	73.98	2.	10.0	30.	TTFFF	20	61
0.350 -20. 5. 2.79	219.77	0.00179	-0.3 0.6	440.	0.904	0.095	1.0	1.					
QUERCUS MUEHLENBERGII	4849.	1958.	0.2863	57.26	2	300.	88.05	2.	10.0	30.	TTFFF	20	62
0.300 -7. 9. 2.94	117.52	0.00234	-0.5 0.5	440.	0.904	0.095	1.0	1.					
QUERCUS PALUSTRIS	5153.	2217.	0.4201	63.01	2	200.	110.70	3.	10.0	100.	TTTFT	20	63
0.013 -6. 9. 2.79	219.77	0.00179	-0.3 0.6	440.	0.904	0.095	1.0	1.					
QUERCUS VIRGINIANA	6674.	4849.	0.0828	24.84	1	300.	51.84	3.	10.0	150.	TTTFF	20	64
0.512 7. 5. 2.79	219.77	0.00179	-0.3 0.6	440.	0.904	0.095	1.0	1.					
THUJA OCCIDENTALIS	2188.	1000.	0.2303	46.04	1	400.	54.63	1.	5.0	400.	TTTTF	8	65
0.350 -20. 6. 2.79	219.77	0.00179	-0.3 0.6	248.	0.804	0.069	1.0	3.					
NYSSA SYLVATICA	6960.	1910.	0.2863	57.26	2	300.	88.05	1.	80.0	200.	FTFFF	20	66
0.301 -2. 2. 2.99	207.43	0.00175	-1.7 1.0	440.	0.814	0.078	1.0	1.					
OSTRYA VIRGINIANA	5556.	1278.	0.5452	54.52	1	100.	137.70	2.	6.0	20.	FTFFF	20	67
0.280 -18. 9. 2.94	117.52	0.00234	-0.5 0.5	173.	0.729	0.044	0.5	1.					
PRUNUS SEROTINA	5993.	2132.	0.2863	57.26	2	200.	132.10	3.	12.0	200.	FFFTF	20	68
0.300 -10. 3. 2.99	207.43	0.00175	-1.7 1.0	173.	0.729	0.044	0.5	1.					
BETULA ALLEGENESIS	2500.	1100.	0.5013	76.40	1	250.	106.40	3.	12.0	100.	FFTTF	120	69
0.200 -18. 4. 2.94	117.52	0.00234	-0.5 0.5	248.	0.804	0.069	0.8	1.					
PINUS RIGIDA	3100.	1940.	0.3312	49.68	2	200.	90.49	2.	6.0	20.	FTFFF	20	70
0.307 -7. 12. 2.79	219.77	0.00179	-0.3 0.6	440.	0.804	0.069	1.0	1.					
QUERCUS ELLIPSOIDALIS	2234.	2000.	0.4201	63.01	2	200.	110.70	3.	12.0	200.	FTFTF	20	71
0.280 -15. 9. 2.79	219.77	0.00179	-0.3 0.6	440.	0.904	0.095	1.0	1.					
QUERCUS BOREALIS	3250.	1100.	0.9452	94.52	2	250.	87.33	2.	12.0	40.	TFFFF	40	72
0.225 -17. 9. 2.79	219.77	0.00179	-0.3 0.6	440.	0.904	0.095	1.0	1.					

Table 4. Decomposition parameters used in FDAT and C.

Tissue type	Class	Species	Initial nitrogen (%)	g N immobilized per g of weight loss	Critical nitrogen (%)	Initial lignin (%)	Lignin parameters[a] A	Lignin parameters[a] B	Ash correction[b]	References[c]
Leaves	1	Dogwood	0.81	0.0015	1.3	3.9	52.17	0.336	0.90	3,11
	2	Maple, ash, basswood	1.05	0.005	1.6	12.1	52.19	0.4	0.9	5,11,12,13,15,16
	3	Cherry	1.2	0.0149	2.9	19.3	77.87	0.508	0.92	12
	4	Birch	0.88	0.0092	2.0	15.8	66.93	0.435	0.92	4,5,12,13,15
	5	White oaks	0.83	0.0033	1.3	18.7	51.94	0.315	0.93	2,3,10,15,17
	6	Hemlock	0.83	0.0065	1.5	20.6	68.39	0.475	0.96	2,11,15,
	7	Aspen	0.83	0.0095	1.7	21.4	70.59	0.46	0.94	2,7,8,12,15,16
	8	Beech	0.90	0.0367	4.8	24.1	119.67	0.790	0.91	5,12
	9	Red oaks	0.86	0.0089	1.8	24.8	61.05	0.359	0.95	2,11,15,17
	10	Fir	0.07	0.0052	1.5	28.0	59.26	0.383	0.97	2,7,8,13,18
	11	Spruce	0.46	0.0215	0.72	21.6	90.52	0.594	0.97	6,14
	12	Pines	0.45	0.0042	0.82	28.3	56.46	0.327	0.96	2,4,11,13,15,17
Roots	13	All	0.93	0.0108	1.5	25.3	70.00	0.456	0.98	10
Fresh wood	14,15	All	0.3	0.0	0.5	17.3	48.31	0.299	0.99	1,2
Twigs	16	All	0.3	0.0113	0.9	17.3	48.31	0.299	0.96	9,11
Well-decayed wood	17	All	0.5	0.0113	2.0	42.3	90.61	0.299	0.99	1,2

[a]% lignin = a − b (% weight remaining).

[b]Ash free weight = ash correction multiplied by dry weight.

[c]References

1. Aber and Melillo (1982)
2. Berg et al. (1985)
3. Cromack (1973)
4. Daubenmire and Prusso (1963)
5. Gosz et al. (1973)
6. Hayes (1965)
7. Lousier and Parkinson (1976,1978)
8. MacLean and Wein (1978)
9. McClaugherty et al. (1984)
10. McClaugherty et al. (1985)
11. Melillo et al. (1982)
12. Melin (1930)
13. Moore (1984)
14. Pastor et al. (1984)
15. Pastor and Bockheim (1984)
16. Sharpe et al. (1980)
17. Vogt et al. (1983)

REFERENCES FOR TABLE 4

Aber, J. D., and J. M. Melillo. 1982. FORTNITE: A computer model of organic matter and nitrogen dynamics in forest ecosystems. University of Wisconsin Research Bulletin R3130.

Berg, B., G. Ekbohm, and C. A. McClaugherty. 1985. Lignin and holocellulose relations during long-term decomposition of some forest letters. Canadian Journal of Botany (62:2540-2550).

Cromack, K. 1973. Litter production and decomposition in a mixed hardwood watershed and a white pine watershed at Coweeta Hydrologic Station, North Carolina. Ph.D. dissertation, University of Georgia, Athens, Georgia.

Daubenmire, R., and D. C. Prusso. 1963. Studies of the decomposition rates of tree litter. Ecology 44:589-592.

Gosz, J. R., G. E. Likens, and F. H. Bormann. 1973. Nutrient release from decomposing leaf and branch litter in the Hubbard Brook Forest, New Hampshire. Ecological Monographs 43:173-191.

Hayes, A. J. 1965. Studies on the decomposition of the coniferous leaf litter. I. Physical and chemical changes. Journal of Soil Science 16:121-140.

Lousier, J. D., and D. Parkinson. 1976. Litter decomposition in a cool temperate forest. Canadian Journal of Botany 54:419-436.

Lousier, J. D., and D. Parkinson. 1978. Chemical element dynamics in decomposing leaf litter. Canadian Journal of Botany 56:2795-2812.

MacLean, D. A., and R. W. Wein. 1978. Weight loss and nutrient changes in decomposing litter and forest floor material in New Brunswick forest stands. Canadian Journal of Botany 56:2730-2749.

McClaugherty, C. A., J. D. Aber, and J. M. Melillo. 1984. Decomposition dynamics of fine roots in forested ecosystems. Oikos 42:378-386.

McClaugherty, C. A., J. Pastor, J. D. Aber, and J. M. Melillo. 1985. Forest litter decomposition in relation to soil nitrogen dynamics and litter quality. Ecology 66:266-275.

Melillo, J. M., J. D. Aber, and J. F. Muratore. 1982. Nitrogen and lignin control of hardwood leaf litter decomposition dynamics. Ecology 63: 621-626.

Melin, E. 1930. Biological decomposition of some types of litter from North American forests. Ecology 11:72-101.

Moore, T. R. 1984. Litter decomposition in a subarctic spruce-lichen woodland, eastern Canada. Ecology 65:299-308.

Pastor, J., J. D. Aber, C. A. McClaugherty, and J. M. Melillo. 1984. Aboveground production and N and P cycling along a nitrogen mineralization gradient on Blackhawk Island, Wisconsin. Ecology 65: 256-268.

Pastor, J., and J. G. Bockheim. 1984. Distribution and cycling of nutrients in an aspen-mixed hardwood-Spodosol ecosystem in northern Wisconsin. Ecology 65: (339-353).

Sharpe, D. M., K. Cromack, Jr., W. C. Johnson, and B. S. Ausmus. 1980. A regional approach to litter dynamics in Southern Appalachian forests. Canadian Journal of Forest Research 10:395-404.

Vogt, K. A., C. C. Grier, C. E. Meier, and M. R. Keyes. 1983. Organic matter and nutrient dynamics in forest floors of young and mature *Abies amabilis* stands in western Washington, as affected by fine-root input. Ecological Monographs 53:139-157.

6. Destination when cohort reaches critical percent of nitrogen. 1 = humus; 2 = well-decayed wood.
7. Initial percent of lignin.
8,9. Lignin decay parameters (Eq. B-8, Appendix 2).
10. Ash correction factor.

Next, NCOHRT, the number of cohorts present in the forest floor in any year (initially one for humus), is read. Lastly, BASESC and BASESN (starting humus weights and N contents) are read.

3.3 SUBROUTINE TEMPE

Subroutine TEMPE calculates number of degree days (DEGD) for the current year of simulation. The subroutine calls subroutine LININT to make linear interpolations between the means and standard deviations of temperatures of consecutive years. LININT returns these interpolations in arrays T and VT, respectively. The program then calculates a random temperature normally distributed around the mean temperature for month I:

$$RT(I) = T(I) + VT(I)*Z(1) \quad , \tag{9}$$

where Z is a random number between 0 and 1 provided by subroutine GGNORD. The number of degree days for the year is

$$DEGD = \sum_{I=1}^{12} (RT(I) - DDBASE)*DAYS(I) \quad , \tag{10}$$

where DDBASE is a base temperature in carbon above which degree days are counted and DAYS(I) is the number of days in a given month. If RT(I) is less than DDBASE, the month has no degree days.

3.4 SUBROUTINE MOIST

For the purposes of this model, lack of sufficient moisture for tree growth is measured as the number of days in the growing season for which there is inadequate soil moisture. This subroutine calculates this parameter (FJ), as well as actual evapotranspiration (AET), using the water-budgeting method of Thornthwaite and Mather for each year of the simulation.

The amount of water a soil can hold [available soil water (ASW)] is determined by soil depth, texture, and other physical properties. The physical properties can be described for our purposes by the volume that water occupies in a soil when it is at field capacity (FC) and when soil water is limiting to growth (DRY). We selected the soil water tension of -15 x 10**15 Pa as the limiting soil-water content since this parameter is usually measured and reported by soil scientists and is close to the wilting point for agricultural crops. The available water for plant growth (ASW; Fig. 3) is then defined as

$$ASW = FC - DRY \tag{11}$$

Given monthly rainfall and temperature data and appropriate soil characteristics, with suitable interpolation subroutine MOIST calculates the number of drought days during the growing season. The following information is required as initial input to the program:

FC = field-moisture capacity of the soil, cm (Fig. 3),

DRY = wilting point of the soil, cm (Fig. 3),

RSAV(12) = average monthly rainfall, cm,

VRSAV(12) = standard deviation of monthly rainfall,

TSAV(12) = average monthly temperature, C, and

VTSAV(12) = standard deviation of average monthly temperature.

There is a problem of choosing the correct initial value of soil water for the water-balance calculations. However, in most cases the soil becomes saturated each spring, thereby resetting the soil water to field capacity. The program begins with soil moisture at FC in January. The monthly rainfall and temperature for each month k is chosen from a normal distribution with means RSAV(k), TSAV(k), and standard deviations VRSAV(k) and VTSAV(k), respectively.

Monthly potential evapotranspiration (U) is calculated, in centimeters as

$$U = 1.6*[(10.*RT(K)/TE)**A]*CLAT(K,LAT) \tag{12}$$

where RT(K) is the temperature for month k [0 is used if t(k) < 0]; TE is Thornthwaite and Mather's temperature-efficiency index being equal to the sum of the 12 monthly values of the heat index I(k);

$$TE = \sum_{k=1}^{12} I(k) = \sum_{k=1}^{12} (0.2 * RT(K) ** 1.514) \quad , \tag{13}$$

and

$$A = 0.000000675(TE)**3-0.0000771*(TE)**2 \tag{14}$$

$$+0.01792*TE + 0.49239 \quad .$$

The parameters $C_{k,l}$ adjust the monthly evapotranspitation values to account for latitude, day length, and number of days in a month. The potential monthly water loss (PWL) is the difference between the month's rainfall and U(k). The amount of soil moisture retained (WATER) is calculated from the cumulative potential monthly water loss (ACCPWL) and FC according to the formula:

$$\text{WATER} = \text{FC*EXP((0.000461-1.10559 /FC)*-ACCPWL)} \qquad (15)$$

where all variables are in centimeters of water (Pastor and Post 1984).

The annual number of dry days (FJ) is calculated by adding up each month's dry days (DDI) for the year. The transition in soil moisture levels between 2 months is assumed to be linear with time (Fig. 4). If 2 consecutive months have soil moisture above the wilting point (DRY), then no DDI are added (Fig. 4a). If 2 months have soil moisture below DRY, then the number of days in the first month are added to the total (Fig. 4b). If 1 month has soil moisture above DRY and the other below, then the number of DDI must be interpolated by determining the day on which soil moisture drops below DRY or rises above dry, depending on whether soil moisture is less than or greater than the previous month, respectively (Figs. 4c,d). Any DDI falling outside the growing season limits are excluded from the total number of DDI.

3.5 SUBROUTINE DECOMP

There are two main sections to this subroutine: a section that calculates weight loss, nitrogen immobilization, lignin decay, and CO_2 loss from decomposing litter cohorts and a succeeding section

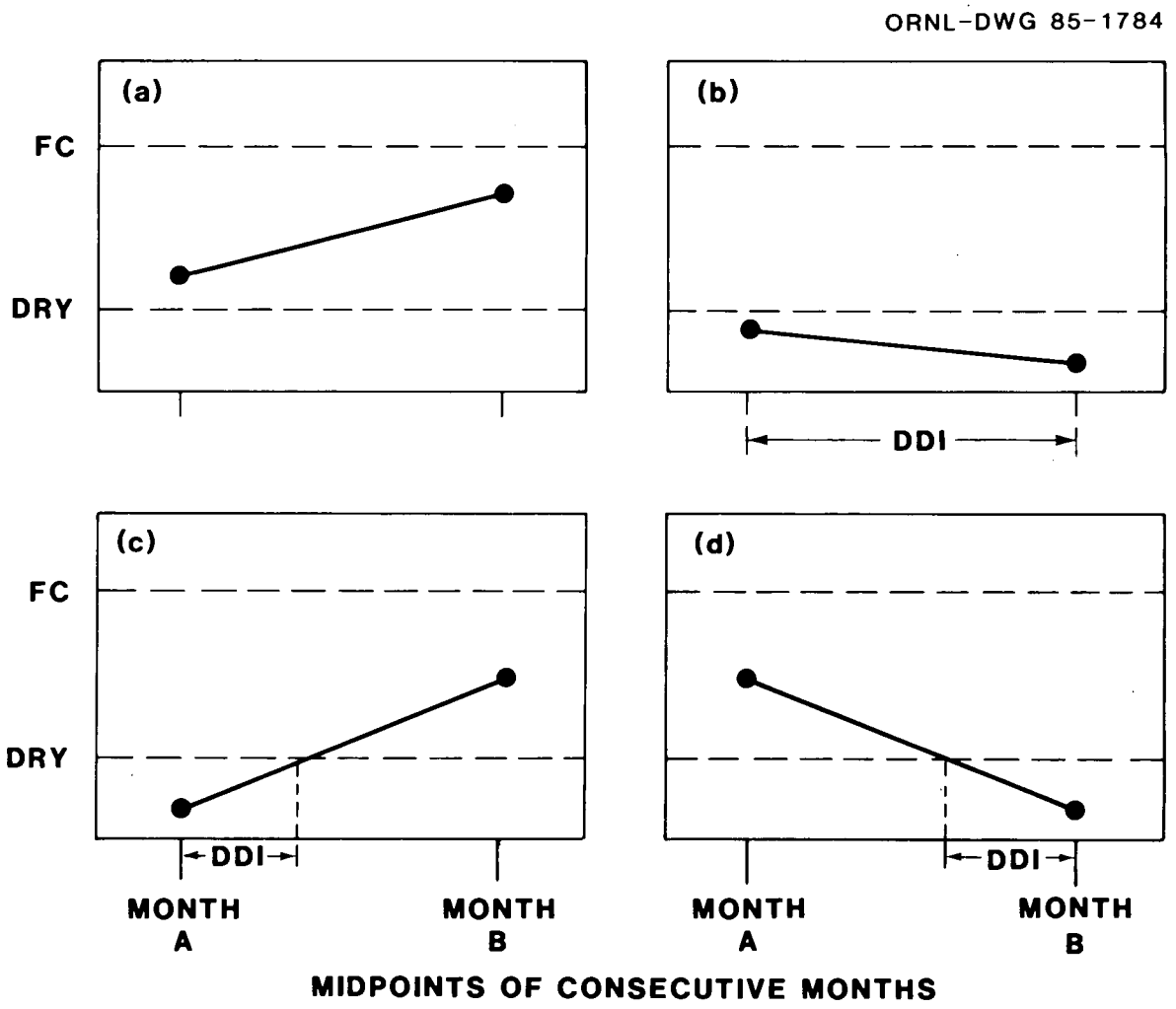

Fig. 4. Schematic of water balance calculations.

that calculates nitrogen mineralization, weight loss, and CO_2 loss from decomposing humus. The organic matter and nitrogen contents of a litter cohort are transferred to the soil humus pool when the nitrogen concentration of the cohort reaches the critical nitrogen concentration for that litter type (Table 3). Figure 5 represents the flow of carbon and nitrogen as simulated by this subroutine.

DECOMP begins by setting variables that are recalculated annually to zero. Next, ash-free weight (ASHFRE), carbon content (TYLC), and nitrogen content (TYLN) that this year's leaf and twig litter are calculated. These are used to calculate the N:C ratio of leaf and twig litter (TYLNC) which will be used later to calculate nitrogen mineralization.

Data on this year's cohorts of litter are next placed in rows I = 2, NCOHRT of the C array. (Row 1 always holds data on humus weight and N content.) The weight of each type of this year's litter in read into C(I,1), the total nitrogen content into C(I,2). These will be updated annually until the litter is transferred. C(I,3) through C(I,9) are the same as FDAT(I,3) through FDAT(I,9). C(I,7), the lignin concentration, will be updated annually. C(I,10) is the original cohort weight and is used to compute percent of weight remaining. C(I,11) is the cohort percent of nitrogen and is updated annually.

Nitrogen mineralization and humus carbon turnover rates modeled in DECOMP are based on data from a wide variety of old growth forests in central Wisconsin (Pastor et al. 1984, McClaugherty et al. 1985). There is no doubt that these relationships might differ depending on

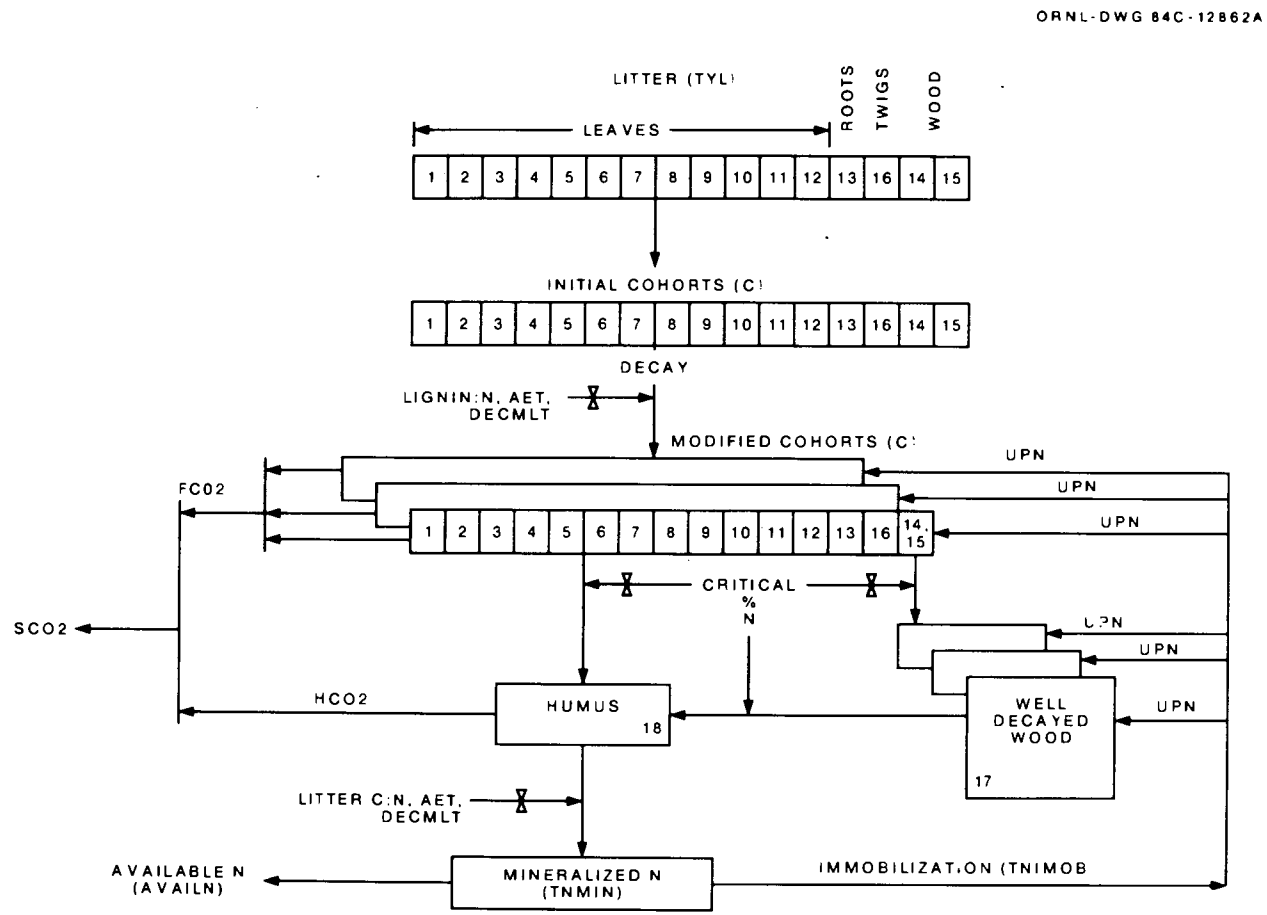

Fig. 5. The flow of carbon and nitrogen in subroutine DECOMP. Each bar is one year's cohort of 12 leaf litter types, root, twig, wood, and well decayed wood litter. Numbers in the boxes refer to designated litter type in FDAT. Capital letters refer to variables and arrays in the FORTRAN code (Appendix A.).

climate, but there are also little comparable data to determine this. Consequently, we introduce a hypothetical AET multiplier,

$$AETM = (-AET)/(-1200 + AET) \quad (16)$$

which scales predicted nitrogen-mineralization rate at the simulated AET to what was measured at the Wisconsin site having an AET of 600 mm. With decreases in AET below 600 mm per year, we assume N mineralization declines as a Michaelis-Menten function with rates half that measured by Pastor et al. (1984) when AET = 400 mm per year. K. Saterson (Univ. of North Carolina, personal communication) found N mineralization rates in an old-growth white oak stand in North Carolina (AET = 800 $mm \cdot yr^{-1}$) comparable to rates in a similar stand of Pastor et al. (1984). We therefore assume that AETM = 1.0 when AET is greater than 600 $mm \cdot yr^{-1}$. Current work at Walker Branch Watershed and various Long-term Ecological Research LTER sites should supply a more accurate relationship between AET and these processes. Meanwhile, the current form will not markedly affect these processes except under extremely low AET (dry and/or cold climates).

Canopy openings may increase decay rates because of microclimatic changes. Modeling this is a twofold problem: (1) determining gap size and occurrence and (2) relating decay rates to gap size. The problem is compounded by a lack of data. We, therefore, calculate a hypothetical decay multiplier as follows: Detection of a gap depends on the extent to which current leaf-litter production is less than leaf-litter production under a closed-canopy of an old-growth forest. An equation describing closed canopy leaf production (CCLL) in relation

to soil field-water availability was derived from data in Pastor et al. (1984) on soil texture and leaf production in old-growth forests and from parameters in Broadfoot and Burke (1958) for available soil moisture (FC - DRY) in soils of different textures:

$$CCLL = [1.54 + 0.0457*(FC - DRY)] \quad . \tag{17}$$

A decay multiplier (DECMLT) is then calculated by comparing this year's leaf litter (TYLL) with CCLL:

$$DECMLT = 1.0 + (-0.50 + .075*(FC - DRY))*(1.0 - TYLL/CCLL) \quad . \tag{18}$$

For soils of high water-holding capacity, DECMLT ranges from 1.0 (TYLL = CCLL) to 2.0 (no canopy). For soils of low water-holding capacity, DECMLT ranges from 1.0 to 1.25.

The DO-4 loop is the main loop for calculating annual litter weight loss, nitrogen immobilization, and new nitrogen and lignin concentrations for each cohort I. If NCOHRT = 1, only humus is present, and this loop is skipped.

Annual percent weight loss (PWTLOS) of each cohort is calculated as a function of AET and current lignin:nitrogen ratio [C(I,7)/C(I,11)]:

$$PWTLOS = (0.9804 + 0.09352*AET) - ((-0.4956 + 0.00193*AET)* (C(I,7)/C(I,11)) \tag{19}$$

(Appendix B) and then multiplied by DECMLT. PWTLOSS is restrained to 10%/year for wood from trees <10 cm-dbh, 3%/year for wood >10 cm-dbh, 5% for well-decayed wood, and <20% for twigs. WTLOSS is actual weight loss of each cohort in $Mg \bullet ha^{-1}$. Nitrogen

immobilization (UPN) by each cohort is the weight loss times nitrogen equivalent [C(I,3); Appendix B]. The new nitrogen concentration [C(I,11)] is calculated after adding in UPN and subtracting weight loss. If this exceeds the critical N concentration [C(I,4)], WTLOSS and UPN are recalculated to equal that needed to reach the critical percent of nitrogen.

When the critical percent of nitrogen is reached, cohort organic matter and nitrogen contents are transferred to humus organic matter and nitrogen pools [C(1,1) and C(1,2)]. Woody litter is first transferred to a well-decayed wood cohort (FFW), where it resides until it reaches a second critical percent of nitrogen; whereupon it is then transferred to humus (Fig. 5). The weight of each transferred cohort is flagged to zero. If the critical percent of nitrogen is not reached, the cohort is retained for an additional year of decomposition, and the weight [C(I,1)], nitrogen content [C(I,2)], and lignin concentration [C(I,7)] are updated.

The amount of carbon respired during cohort decomposition is next calculated as 48% of WTLOSS (Aber and Melillo 1982a).

Total immobilization (TNIMOB) is the total microbial demand for nitrogen during litter decomposition and is the sum of the demands during the decay of each cohort (UPN). Throughfall supplies some microbial nitrogen demands (McClaugherty 1984) and is ~16% (±SE 2.5%) of leaf-litter nitrogen in most forests (Cole and Rapp 1981). This amount is subtracted from TNIMOB, and the remainder will be supplied by nitrogen mineralization later.

The next 17 lines of code calculate annual nitrogen mineralization (TNMIN), the amount of nitrogen available to trees (AVAILN), and humus CO_2 evolution (HCO2). The main equation calculates nitrogen mineralization per Mg organic matter as a function of litter N:C (TYLNC; Pastor et al. 1984) and is bypassed in years of no litter (year one and any year of complete forest destruction):

$$TNMIN = (-0.000379*TYLNC)/(-0.02984 + TYLNC) \quad . \qquad (20)$$

This is multiplied by the amount of humus present [(C(1,1)], DECMLT, and AETM.

Whenever there is no litter, humus carbon and nitrogen are assumed to turn over at 3.5% of pool size for that year. This is an average for a wide variety of temperate deciduous and coniferous forests (Pastor et al. 1984).

Mineralized nitrogen is subtracted from the humus nitrogen pool, and humus carbon is assumed to turn over at the same rate as humus nitrogen. HCO2 is 48% of humus weight loss. A new humus C:N ratio (HCN) is calculated annually.

Microbial nitrogen immobilization (TNIMOB) is next subtracted from total nitrogen mineralization (TNMIN) to yield the amount of nitrogen available to trees (AVAILN). Total soil carbon respired this year (SCO2) is the sum of cohort CO_2 evolution (FCO2) and humus CO_2 evolution (HCO2). The rest of the subroutine is a housecleaning procedure. All transferred cohorts are removed from the carbon array and cohorts lower in the array are moved up. A new well-decayed wood cohort is created from any woody litter that has reached its critical

percent of nitrogen. The total weight [FF(I,2)] and nitrogen content [FF(I,3)] of each type of litter (I = 1 to 16), humus (I = 17), and total soil (I = 18) are calculated.

3.6 SUBROUTINE GMULT

GMULT determines to what extent degree days, soil moisture, and soil nitrogen availability are less than optimum for each species by scaling each of these resources from zero (condition prohibits growth) to some maximum value (conditions optimal for growth, usually one). Sample curves for these, as well as for available light multipliers, are shown in Fig. 6.

The degree day growth multiplier is symmetrically parabolic between DMIN (minimum degree days required) and DMAX (maximum degree days tolerated) and is taken from Botkin et al. (1972). The soil-moisture growth multiplier (SMGF) is calculated from the fraction of growing-season days in which soil moisture is below the wilting point (FJ):

$$SMGF = \begin{cases} SQRT((D3*TGS-FJ)/(D3*TGS)) & FJ < D3*TGS \\ 0. & FJ \geq D3*TGS \end{cases} \quad (21)$$

D3 is the maximum proportion of growing season of total growing season (TGS) days that each species can tolerate soil moisture levels below the wilting point (Appendix C).

The nitrogen growth multiplier (SNGF) is taken from Mitchell and Chandler (1939) and Aber et al. (1978) (Eqs. D-1, D-3; Appendix D). Available nitrogen (AVAILN) is increased by 5 $kg \bullet ha^{-1} \bullet yr^{-1}$

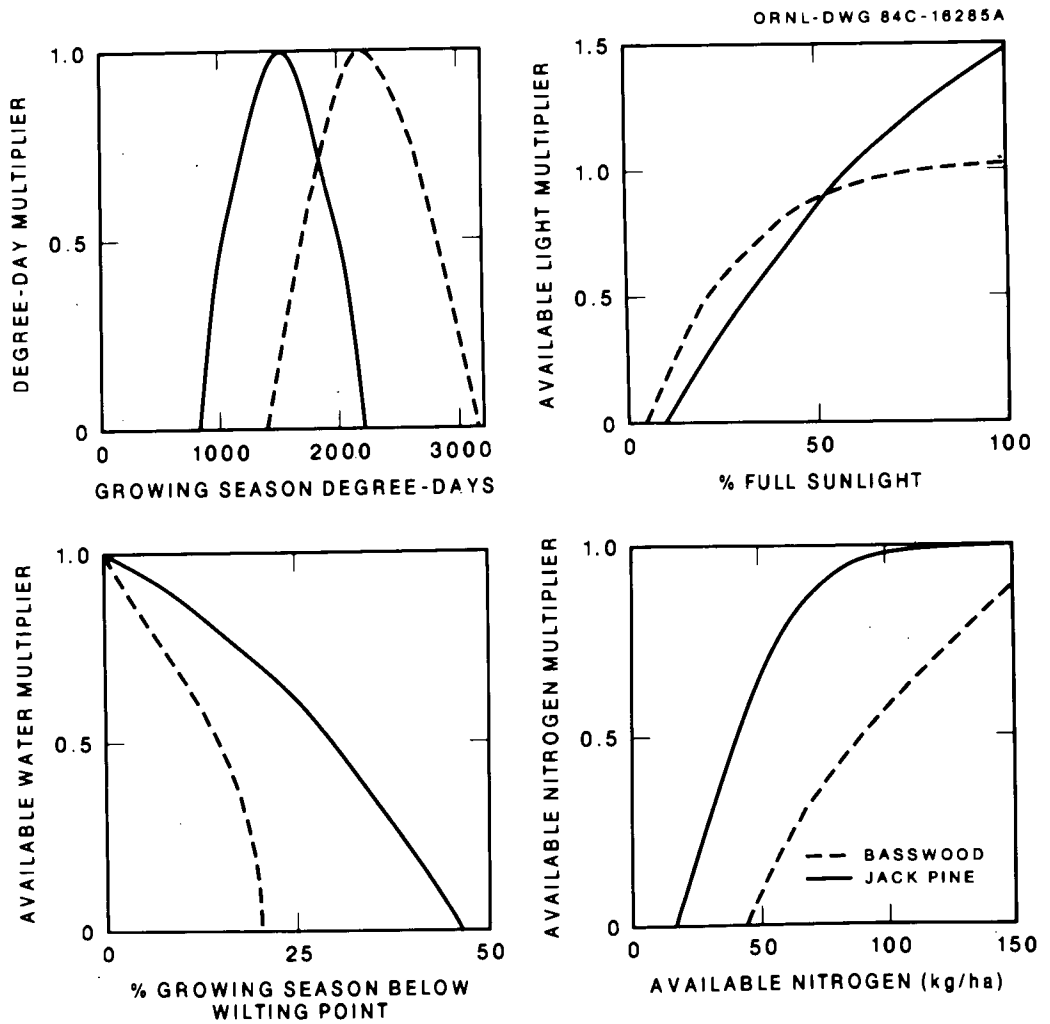

Fig. 6. Degree day, available light, soil water, and soil-nitrogen growth multipliers for jack pine and basswood, two very different cool temperate species.

(precipitation inputs) and then converted to a relative scale (AVLMC) that corresponds to Mitchell and Chandler's (1939) relative nitrogen-availability index. Using this relative value and species parameters CM1, CM2, and CM3, a foliar N concentration (CONN) is calculated that is then converted, using species parameters CM4 and CM5, to a soil-nitrogen growth factor.

3.7 SUBROUTINE BIRTH

This subroutine simulates the entrance of new stems into the forest. The number of stems of a chosen species allowed to seed-in or sprout is a maximum number decreased to the extent that available light at the forest floor, soil moisture, and degree days are less than optimum for that species.

BIRTH begins by calculating available light at the forest floor (AL) as a function of total-stand foliage weight (FOLW). The leaf (eight (grams) of each tree k is a function of its dbh (held in array DBH) and species parameters SLTA,SLTB, and FWT for species j:

$$FOLW = \sum_{J=1}^{NSPEC} \sum_{K=1}^{NTREES(J)} ((SLTA(J) + SLTB(J)*DBH(K))/2.)**2*3.14 \quad (22)$$

$$*FWT(J)*FRT(J) \quad ,$$

where SLTA and SLTB convert dbh to crown area (100 m^2) and FWT is leaf production (g) per 100m^2 of crown area (Aber and Melillo 1982b). FRT is the number of years that leaves are retained. Foliage

area (FOLA; Sollins et al. 1973) is used later to determine seedbed conditions for reproduction (below).

A digression: This equation poses a programming problem that arises repeatedly in the demographic subroutines. Note that in this equation, data from arrays of different sizes need to be accessed so that a characteristic of an individual tree (in this case dbh) is matched with a particular characteristic of the species to which the tree belongs. This problem is always handled by one DO loop nested within another:

```
     NU = 1
     DO 30 J = 1,NSPEC
     IF[NTREES(J).EQ.0] GO TO 30
     NU = NL + NTREES(J) - 1
     DO 20 K = NL,NU
     Y(K) = f[A(J),B(K)]
20       CONTINUE
     NL = NL + NTREES(J)
30       CONTINUE  ,
```

where

NTREES is the number of trees of species J,

A is a parameter for species J,

B is a characteristic for tree K,

f is some function that depends on A and B.

The percent of full sunlight at the forest floor (AL) is negatively and exponentially related to FOLW:

$$AL = \exp(-FOLW/93750.0) \quad , \tag{23}$$

where the divisor 93,750.0 converts leaf weight in g per 1/12-ha plot to available light and is based on light measurements at ground level in a variety of temperate deciduous and coniferous forests (Aber et al. 1982, Pastor and McClaugherty, unpublished data).

The DO-60 loop prepares a list of eligible species for planting, depending on whether each species passes certain logical tests. First, various reproduction requirements are checked (Solomon et al. 1981), including seedbed conditions required, the possibility of seed production being reduced in hot years, and the extent to which seedlings or seeds are food for mammals. As the stand canopy develops and AL falls below 60% of full sunlight, recruitment of aspen, pin cherry, and most pines is discontinued. Recruitment of birch, tulip poplar, and white pine is discontinued when AL is below 30% of full sunlight. Next, a list of eligible species (NEWTR) is made, depending on the above qualifications and species degree-day and frost tolerances compared with simulated degree days and January temperature, respectively. NEWTR holds the species number (J) for each eligible species.

The original demographic arrays (DBH, IAGE, NOGRO) are next read into temporary arrays (DTEMP, ITEMP, NTEMP) to which new seedlings and sprouts will be added later.

The DO 140 loop is the main planting loop. How many seedlings of the selected species will be planted (NPLANT) are calculated as a maximum amount (MPLANT) decreased by light (SLITE), degree day (DEGDGF), and soil-moisture (SMGF) multipliers and a random number between 0 and 1. The values of MPLANT are reasonable approximations taken from the literature (Leak and Wilson 1958, Graham et al. 1961, Marquis 1965, 1967, Sander and Clark 1971, Marks 1974, Brinkman and Roe 1975, McQuilkin 1975).

DEGDGF and SMGF were calculated in GMULT. The light multipliers (Fig. 6) depend on the amount of light reaching the forest floor and a species response curve determined by its shade tolerance (Shugart and West 1977):

$$\text{ALGF} = \begin{cases} 2.24*(1.0 - \text{EXP}(-1.136*(\text{AL} - 0.08))) & \text{ITOL=2} \\ 1.0-\text{EXP}(-4.64*(\text{AL}-.05)) & \text{ITOL=1} \end{cases} \quad (24)$$

where ITOL indicates whether the species is shade tolerant (1) or shade intolerant (2).

How many sprouts are planted depends on whether illumination at the forest floor is greater than 50% of full sunlight, a tree of this species died last year and a stump is, therefore, available (KSPRT incremented by 1 in KILL) and the average number of sprouts for the species (Solomon et al. 1981) decreased by light, degree day, and soil-moisture multipliers and a random number between zero and one. The number of sprouts of this species is added to NPLANT.

Trees are planted by incrementing the total number of trees in the stand (NTOT), incrementing the number of trees of the particular

species [NTREES(NSP)], calculating a dbh randomly distributed around a mean value of 1.42 cm, and sorting the temporary arrays DTEMP, ITEMP, and NTEMP to keep all new seedlings contiguous with more mature trees of the same species. After all new stems have been planted, the temporary arrays are read back into the original DBH, IAGE, and NOGRO arrays.

Finally, the ages of all trees are incremented by one year and array KSPRT is reinitialized to zero.

3.8 SUBROUTINE GROW

GROW increments the diameter of each tree. A maximum diameter increment for each tree is reduced to the extent that the resource in least abundance is less than optimum for that species.

Before calculations are done on individual trees, the total number is counted (NTOT). If there are no trees (e.g., any year of catastrophic destruction), the rest of the subroutine is skipped.

While the degree day, soil moisture, and soil N growth multipliers apply to all members of a species, the available light multiplier is calculated specifically for each tree. A profile of the vertical distribution of leaf biomass is, therefore, needed to determine how much each tree is shaded by all taller trees. First, the height of each tree above breast height (IHT) is calculated to the nearest 0.1 m:

$$IHT = (B2*DBH - B3*DBH**2)/10. + 1. \quad (25)$$

The leaf weights (SUMLA) of all trees of the same height are then calculated as in BIRTH (Eq. 22). The DO-50 loop steps down through each 0.1 m of height profile, adding up the leaf biomass of all trees taller than a given height. The amount of light filtering through the leaf biomass of all taller trees (AL) and the available light growth multiplier for each tree are calculated using Eq. (23) and (24).

If conditions were optimal for the growth of this tree, the diameter increment (DNCMAX) would be determined by how close DBH*IHT (an index of current volume) was to the product of maximum height (HMAX) and diameter (DMAX) for this species and the rate that the species reaches maximum volume. The optimal diameter increment (DNCMAX) for each tree is calculated from species parameters G, B2, and B3. All three of these parameters relate to the maximum height and diameter obtained by each species (Table 5):

$$B2 = 2*(HMAX - 137)/DMAX \tag{26}$$

$$B3 = (HMAX - 137.)/(DMAX)**2 \quad , \tag{27}$$

and G is chosen such that dbh is 2/3 of maximum dbh at 1/2 the maximum age of the species (see Botkin et al. 1972, Eq. A4, p. 872 for deriving G). The product of maximum height and diameter is

$$GR = (137. + (0.25*(B2**2/B3)*(0.5*B2/B3) \quad , \tag{28}$$

and the optimal diameter increment for a tree of this height and diameter is

$$DNCMAX = G*DBH*(1.0 - (137.*DBH+B2*DBH**2 - B3*DBH**3/GR)/$$

$$(274. + 3.0*B2*DBH - 4.0*B3*DBH**2) \tag{29}$$

Table 5. Species' maximum heights, diameters, and ages

Species	Height (m)	Dbh (m)	Age
Abies balsamea	15	0.5	200
Abies fraseri	35	1.0	200
Acer rubrum	30	1.0	150
Acer saccharinum	30	1.2	125
Acer saccharum	30	1.5	300
Aesculus octandra	30	1.0	100
Betula allegheniensis	30	0.75	250
Betula lenta	21	0.75	265
Betula papyrifera	25	1.0	140
Betula populifolia	10	0.25	250
Carpinus caroliniana	10	0.25	150
Carya cordiformis	30	1.0	300
Carya glabra	30	1.0	300
Carya lacinosa	30	1.0	300
Carya ovata	30	1.0	300
Carya texana	30	1.0	300
Carya tomentosa	28	1.0	300
Castanea dentata	35	1.5	300
Celtis laevigata	30	0.75	200
Cornus florida	10	0.25	100
Fagus grandifolia	30	1.0	366
Fraxinus americana	30	1.0	300
Fraxinus nigra	25	1.0	300
Fraxinus pennsylvanica	30	1.0	150

Table 5. (Continued)

Species	Height (m)	Dbh (m)	Age
Fraxinus quandrangulata	30	1.0	300
Juglans cinerea	30	1.0	100
Juglans nigra	35	1.5	250
Juniperus virginiana	20	0.75	300
Larix laricina	25	0.75	335
Liquidambar styraciflua	35	1.25	250
Liriodendron tulipifera	35	1.5	300
Nyssa sylvatica	30	1.0	300
Ostrya virginiana	15	0.5	100
Picea glauca	30	0.64	200
Picea mariana	20	0.4	250
Picea rubens	30	1.0	300
Pinus banksiana	25	0.5	150
Pinus echinata	30	1.0	300
Pinus resinosa	25	0.75	310
Pinus rigida	20	0.75	200
Pinus strobus	35	1.5	450
Pinus taeda	35	1.0	250
Pinus virginiana	15	0.5	250
Platanus occidentalis	35	1.75	500
Populus balsamifera	25	0.75	150
Populus grandidentata	25	0.75	70
Populus tremuloides	22	0.75	125
Prunus pennsylvanica	11	0.28	30

Table 5. (Continued)

Species	Height (m)	Dbh (m)	Age
Prunus serotina	30	1.0	200
Quercus alba	35	1.0	400
Quercus borealis	25	0.5	250
Quercus coccinea	25	0.75	400
Quercus ellipsoidalis	25	0.75	200
Quercus falcata	35	1.0	400
Quercus lyrata	25	0.8	250
Quercus macrocarpa	25	0.8	300
Quercus marilandica	15	0.5	400
Quercus muehlenbergii	30	1.0	300
Quercus nuttallii	25	0.75	250
Quercus palustris	25	0.75	200
Quercus prinus	30	1.0	267
Quercus rubra	30	1.0	400
Quercus shumardii	35	1.0	300
Quercus stellata	25	0.75	400
Quercus velutina	30	1.0	300
Quercus virginiana	20	1.5	300
Thuja occidentalis	24	1.0	400
Tilia americana	30	1.0	140
Tilia heterophylla	30	1.0	150
Tsuga canadensis	35	1.5	650
Ulmus alata	20	0.75	125
Ulmus americana	25	0.8	300

(Botkin et al. 1972, Shugart 1984). This optimal diameter increment is decreased by the multiplier (GF) in least abundance relative to requirements to yield actual diameter increment:

$$DINC = DNCMAX*GF \quad . \tag{30}$$

If the diameter growth is <1 mm or 0.1*DNCMAX or if the January temperature is less than the frost tolerance, then the tree is flagged in NOGRO by subtracting one from the current flag. Two consecutive years of slow growth result in a flag of -2 and a higher probability of death.

Woody biomass of the tree (AB1) is next calculated (Sollins et al. 1973):

$$AB1 = 0.1193*DBH**2.393 \quad . \tag{31}$$

The dbh is then incremented by DINC, woody biomass is recalculated, and woody production (AWP) is the net increase.

3.9 SUBROUTINE KILL

Subroutine KILL kills trees based on both maximum age for the species (AGEMAX) and their growth over the previous 2 years. Age-dependent mortality depends on whether a random number chosen for each tree is >4.605/AGEMAX thus yielding a probability of 1% surviving up to maximum age. Age-dependent mortality is, therefore, stochastic. Age-independent mortality, however, is determined more stringently by whether DINC has been less than the minimum amounts

specified in GROW for the last 2 years (NOGRO = -2). The probability of dying for such trees increases to 0.365. This assumes that a tree would have a 1% chance of surviving 10 consecutive years of growth below the minimum specified in GROW (Botkin et al. 1972). A stump of this species is eligible to sprout the next year (KSPRT incremented by 1) if a tree dies with dbh between minimum and maximum diameters that the species can sprout (SPRTMN and SPRTMX, respectively). If a tree dies, the number of stems for that species (NTREES) is decreased by one and the diameter is flagged to -1.

Woody litter from all dead trees [TYL(14 and 15)] is the sum of woody biomass for each dead tree (Eq. 31) times 0.6 to approximate change in wood density from live to dead trees. Foliage litter from each tree (FOLW) is calculated as in Equation 22 without multiplying by FRT. If the tree has grown slowly for the last 2 years (NOGRO = -2) leaf litter is assumed to be one half that of a healthy tree (Bray and Gorham 1964). If the tree dies, all foliage biomass is returned to the soil by multiplying FOLW by FRT. Leaf-litter weights of all trees of the same litter type (TL) are summed and put into the appropriate row of array TYL for decay next year. Fine-root litter [TYL(13)] is 1.3 times foliage litter times a species-specific root:shoot ratio (RTST). Twig litter is ~1/333 of plot basal area based on data from Christensen (1977).

Finally, dead trees are eliminated from arrays DBH, IAGE, and NOGRO because their diameters have been flagged to -1 as above, and data on all remaining trees are moved up one row in these arrays.

3.10 SUBROUTINE OUTPUT

OUTPUT is called at year one and, subsequently, at specified intervals (KPRNT). Species biomass, total biomass, number of live stems, leaf area, and total woody production are calculated for the year it is called. These, along with humus C:N, soil CO_2 evolution, soil organic matter, available nitrogen, and AET, are read into storage arrays. At the end of the run, sums, sums of squares, means, and 95%-confidence intervals are calculated and printed for all of these variables except species biomass, which must be read to tape and processed separately.

3.11 RANDOM NUMBER GENERATORS

Random-number generator URAND (Forsythe et al. 1977) provides a random number between zero and one used in KILL and BIRTH. Subroutine GGNORD uses URAND to calculate normally distributed random numbers (Emshoff and Sisson 1970) for subroutines TEMPE and MOIST. Seeds for different processes or decisions are kept separate in array USEED to minimize correlation between different stochastic events.

3.12 SUBROUTINE ERR

This subroutine provides error checks that may be called at various places in the program. Error checks focus on DO-loop counters that may exceed the bounds of arrays manipulated in the loops. When this happens, the appropriate error is called, a message is sent to the printer, and the program is stopped.

4. COMPUTING REQUIREMENTS

This model was written to run on the Oak Ridge National Laboratory (ORNL) IBM 3033 with virtual storage capacity.

Central processing unit (CPU) time for this model is ~14 s for 1 plot for 100 years. Running an additional plot requires 10 extra CPU seconds while running an additional 100 years requires 7 extra CPU seconds.

On the ORNL IBM 3033, ~400 kilobytes of virtual storage is required for computation. An additional 400 kilobytes is required by all arrays. Three hundred kilobytes of this is required in Subroutine OUTPUT to store data for statistical analysis of a maximum of 100 plots and 70 periods of output. If the user wishes to forgo the capability of running so many plots or receiving so much output, he can substantially reduce his core requirements by decreasing accordingly the sizes of storage arrays that are dimensioned in OUTPUT.

5. SAMPLE RUNS AND FUTURE WORK

Sample outputs for two runs are shown in Table 6. The model was run given central Wisconsin climate, starting soil organic matter of 74 $Mg \bullet ha^{-1}$, and starting soil-nitrogen content of 1.64 $Mg \bullet ha^{-1}$. Twenty plots were simulated during each run. The first run simulated development from bare ground of a forest on a silty clay loam soil (FC = 38.3 cm; DRY = 20 cm). The second run simulated development of a forest on a sandy soil (FC = 15 cm; DRY = 5 cm).

The model predicts a sugar maple-basswood-oak stand on a silty clay-loam soil after 200 years with aboveground biomass of ~400 $Mg \bullet ha^{-1}$, aboveground production of ~ 9 $Mg \bullet ha^{-1}.yr$, and nitrogen availability of 80 to 90 $(kg \bullet ha^{-1}) \bullet yr^{-1}$. On the sandy soil the model predicted a white pine stand with maple and oak understory after 200 years with ~200 $Mg \bullet ha^{-1}$ aboveground biomass, between 6 and 7 $(Mg \bullet ha^{-1}) \bullet yr^{-1}$ aboveground production, and between 60 and 70 kg nitrogen available per year. These results are comparable to measured values for old growth stands in the area (Pastor et al. 1984, McClaugherty et al. 1985).

As the sample runs indicate, the model holds promise for examining regional and local variation in ecosystem carbon and nitrogen storage and cycling. Future work should address the following:

1. Nitrogen mineralization and soil carbon turnover in relation to climate and humus properties.

Table 6. Sample runs for two soils in central Wisconsin

LATITUDE= 43.6 LONGITUDE= 89.8 GROWING SEASON: BEGINS DAY 120.0 ENDS DAY 273.0

	J	F	M	A	M	J	J	A	S	O	N	D
TEMP (C)	-8.6	-7.6	-1.9	6.9	13.7	19.0	21.6	20.5	15.9	9.6	0.8	-6.1
STND DEV	2.9	2.7	2.7	2.0	1.9	1.7	1.4	1.5	1.5	2.0	2.3	2.5
PPT (CM)	2.9	2.7	4.2	7.0	9.2	11.2	8.0	8.9	8.9	5.7	5.5	2.9
STND DEV	1.6	1.9	1.9	2.7	4.1	4.5	3.0	3.6	5.8	3.7	3.4	1.4

FIELD CAPACITY (CM)= 38.3 WILTING POINT (CM)= 20.0
INITIAL SOIL O.M.=74.0 INITIAL SOIL N= 1.64

YR	NUM STEMS	A.G. BIOMASS	LEAF LITTER	LEAF LITR N	A.G. NPP	AVAIL N	HUMUS C:N	SOIL CO2-C	SOIL O.M.	AET
				AVERAGE ACROSS 20 PLOTS						
1.	7513.	4.	1.6	0.0	2.6	105.	21.7	2.17	89.5	580.
25.	5129.	100.	2.6	23.2	12.7	69.	27.5	3.10	85.9	597.
50.	2962.	212.	2.7	24.8	13.0	74.	30.7	4.57	95.7	585.
75.	2042.	300.	2.7	25.6	13.1	86.	31.1	5.48	103.5	590.
100.	1610.	366.	2.6	25.6	12.2	91.	31.1	5.78	104.4	582.
125.	1622.	417.	2.5	25.9	11.4	93.	31.0	5.88	101.9	582.
150.	1703.	437.	2.6	25.6	9.6	85.	31.2	5.69	97.4	568.
175.	1916.	414.	2.5	24.4	9.5	90.	31.0	5.88	95.7	583.
200.	2746.	379.	2.4	23.8	8.8	84.	30.9	5.86	91.9	590.
225.	3042.	372.	2.5	24.6	9.7	92.	30.6	5.62	94.4	582.
250.	2735.	385.	2.6	25.4	10.6	95.	30.6	5.64	92.3	589.
				95% CONFIDENCE INTERVALS						
1.	991.	1.	0.2	0.0	0.4	3.	0.0	0.0	0.1	10.
25.	180.	26.	0.1	1.1	2.7	4.	0.1	0.24	1.2	11.
50.	119.	28.	0.1	1.3	1.3	5.	0.2	0.42	2.2	16.
75.	88.	28.	0.1	1.3	1.1	7.	0.3	0.45	4.0	11.
100.	125.	28.	0.1	1.1	1.1	7.	0.4	0.39	3.9	13.
125.	262.	30.	0.1	1.1	0.8	7.	0.4	0.40	4.1	11.
150.	403.	36.	0.1	1.4	1.2	8.	0.4	0.32	4.4	15.
175.	359.	30.	0.1	1.2	0.7	6.	0.4	0.33	4.6	10.
200.	542.	35.	0.1	1.2	1.2	10.	0.4	0.35	5.9	16.
225.	403.	35.	0.1	1.2	1.0	10.	0.6	0.20	5.8	15.
250.	370.	41.	0.1	1.4	1.0	8.	0.4	0.22	5.5	12.

Table 6 (continued)

FIELD CAPACITY (CM)= 15.0 WILTING POINT (CM)= 5.0
INITIAL SOIL O.M.=74.0 INITIAL SOIL N= 1.64

YR	NUM STEMS	A.G. BIOMASS	LEAF LITTER	LEAF LITR N	A.G. NPP	AVAIL N	HUMUS C:N	SOIL CO2-C	SOIL O.M.	AET
				AVERAGE ACROSS 20 PLOTS						
1.	6440.	4.	1.3	0.0	2.2	67.	21.7	1.34	71.2	554.
25.	5438.	67.	2.2	19.4	9.6	58.	27.0	2.57	87.0	577.
50.	3631.	132.	2.2	19.0	9.1	56.	30.1	3.40	99.8	565.
75.	3093.	161.	2.1	18.3	8.4	64.	31.0	3.92	110.9	574.
100.	3041.	171.	2.1	18.1	7.1	64.	31.2	4.00	118.0	566.
125.	3163.	172.	2.1	17.8	7.0	64.	31.2	3.99	120.3	563.
150.	3190.	176.	2.0	17.9	5.8	61.	31.3	3.69	122.3	539.
175.	2876.	180.	2.0	17.0	6.4	62.	31.6	3.88	119.5	564.
200.	3131.	201.	2.1	18.3	6.0	63.	31.6	3.84	119.1	572.
225.	3356.	203.	2.1	18.8	6.8	66.	31.6	3.94	117.3	552.
250.	3536.	198.	2.2	19.8	7.4	73.	31.5	4.32	112.3	573.
				95% CONFIDENCE INTERVALS						
1.	1904.	1.	0.4	0.0	0.6	3.	0.0	0.07	0.1	16.
25.	354.	22.	0.1	1.6	2.0	5.	0.1	0.28	1.5	14.
50.	362.	28.	0.2	1.9	1.6	7.	0.1	0.56	2.9	23.
75.	353.	24.	0.2	2.1	1.5	9.	0.5	0.61	4.6	18.
100.	537.	29.	0.2	2.4	1.5	9.	0.6	0.54	5.4	19.
125.	560.	25.	0.2	2.5	1.3	9.	0.7	0.50	6.6	19.
150.	625.	27.	0.2	2.7	1.3	10.	0.8	0.45	7.6	21.
175.	488.	25.	0.2	2.9	1.3	9.	0.8	0.44	9.0	15.
200.	583.	31.	0.2	2.9	1.2	8.	0.8	0.41	9.9	22.
225.	627.	30.	0.2	2.9	1.6	9.	0.9	0.46	9.4	22.
250.	531.	38.	0.2	2.6	1.6	8.	0.8	0.31	8.1	18.

2. Nitrogen dynamics of decaying southern Appalachian leaf litter. Studies under way at Walker Branch Watershed and elsewhere will provide such data, as well as examine more closely the relationship between litter and the humus formed from it.
3. The influence of gaps on decay processes. Field experiments are needed to address this.
4. The role of fire in soil-carbon and -nitrogen dynamics (Olson 1981). This is needed particularly when the model is used to simulate boreal forests.
5. The factors that influence seedling ecology. Since species composition is affected by BIRTH and, in turn, affects ecosystem properties (Fig. 1), this is an important process. There are some reports in the forestry literature (e.g., Marquis 1965, 1967) concerning numbers of seedlings expected, given best silvicultural practices, but few that relate seedling birth and survival to environmental factors along the lines of Bourdeau (1954).

REFERENCES

Aber, J. D., D. B. Botkin, and J. M. Melillo. 1979. Predicting the effects of different harvesting regimes on productivity and yield in northern hardwoods. Canadian Journal of Forest Research 9: 10-14.

Aber, J. D., and J. M. Melillo. 1980. Litter decomposition: measuring relative contributions of organic matter and nitrogen to forest soils. Canadian Journal of Botany 58: 416-421.

Aber, J. D., and J. M. Melillo. 1982a. Nitrogen immobilization in decaying hardwood leaf litter as a function of initial nitrogen and lignin content. Canadian Journal of Botany 60: 2263-2269.

Aber, J. D., and J. M. Melillo. 1982b. FORTNITE: A computer model of organic matter and nitrogen dynamics in forest ecosystems. University of Wisconsin Research Bulletin R3130.

Aber, J. D., J. M. Melillo, and C. A. Federer. 1982. Predicting the effects of rotation length, harvest intensity, and fertilization on fiber yield from northern hardwood forests in New England. Forest Science 28: 31-45.

Alexander, M. 1977. Introduction to Soil Microbiology. Wiley, New York.

Allison, F. E. 1973. Soil organic matter and its role in crop production. Elsevier Scientific, New York, New York.

Armentano, T. V., and C. W. Ralston. 1980. The role of temperate zone forests in the global carbon cycle. Can. J. For. Res. 10: 53-60.

Bassett, J. R. 1964. Tree growth as affected by soil moisture availability. Proc., Soil Science Society 28:436-438.

Berg, B., G. Ekbohm and C. A. McClaugherty,. 1985. Lignin and holocellulose relations during long-term decomposition of some forest litters. Canadian Journal of Botany 62:2540-2550.

Billings, W. D. 1941. Quantitative correlations between vegetation changes and soil development. Ecology 22:448-456.

Bosatta, E., and H. Staaf. 1982. The control of nitrogen turnover in forest litter. Oikos 39:143-151.

Botkin, D. B., J. F. Janck, and J. R. Walles. 1972. Some ecological consequences of a computer model of forest growth. Journal of Ecology 60: 849-872.

Bourdeau, P. 1954. Oak seedling ecology determining segregation of species in Piedmont oak-hickory forests. Ecological Monographs 24:297-320.

Bray, J. R., and E. Gorham. 1964. Litter production in forests of the world. Advances in Ecological Research 2:101-157.

Brinkman, K. A., and E. I. Roe. 1975. Quaking aspen: silvics and management in the Lake States. U.S.D.A. Agricultural Handbook No. 486.

Broadfoot, W. M., and H. D. Burke. 1958. Soil-moisture constants and their variation. U.S. Forest Service Southern Forest Experiment Station Occasional Paper 166.

Broadfoot, W. M., and Williston, H. L. 1973. Flooding effects on southern forests. J. Forestry 71:584-587.

Bunnell, F. L., and P. Dowding. 1974. ABSISKO - a generalized model for comparisons between tundra sites. Pp. 227-247. IN A. J. Holding, O. W. Heal, S. JF. MacLean, Jr., and P. W. Flanagan (eds.) Soil organisms and decomposition in tundra. Tundra Biome Steering Committee, Stockholm, Sweden.

Bunnell, F. L., and D. E. N. Tait. 1974. Mathematical simulation models of decomposition in tundra. Pp. 207-225. IN A. J. Holding, O. W. Heal, S. F. MacLean, Jr., and P. W. Flanagan (eds.) Soil organisms and decomposition in tundra. Tundra Biome Steering Committee, Stockholm, Sweden.

Bunnell, F. L., D. E. N. Tact, P. W. Flanagan, and K. VanCleve. 1977. Microbial respiration and substrate weight loss. I. A general model of the influences of abiotic variables. Soil Biology and Biochemistry 9: 33-40.

Carmean, W. H. 1975. Forest site quality evaluation in the United States. Advances in Agronomy 27:209-269.

Christensen, O. 1977. Estimation of standing crop and turnover of dead wood in a Danish oak forest. Oikos 28: 177-186.

Cole, D. W., and M. Rapp. 1981. Elemental cycling in forest ecosystems. Pp. 341-410. IN D. E. Reichle (ed.). Dynamic properties of Forest Ecosystems. Cambridge Univ. Press. Cambridge.

Cooper, W. S. 1923. The recent ecological history of Glacier Bay, Alaska: II. The present vegetation cycle. Ecology 4:223-246.

Cromack, K. 1973. Litter production and decomposition in a mixed hardwood watershed and a white pine watershed at Coweeta Hydrologic Station, North Carolina. Ph.D. dissertation, University of Georgia, Athens, Georgia.

Cropper, W. P., and K. C. Ewel. 1983. Computer simulation of long-turn carbon storage patterns in Florida slash pine plantations. Forest Ecology and Management 6:101-114.

Dunne, T., and L. B. Leopold. 1978. Water in environmental planning. W. H. Freeman and Co., San Francisco.

Emshoff, J. R., and R. L. Sisson. 1970. Design and use of computer simulation models. MacMillan Publ. Co., New York.

Federer, C. A., and G. W. Gee. 1976. Diffusion resistance and xylem potential in stressed and unstressed northern hardwood trees. Ecology 57:975-984.

Flaig, W., H. Beutelspacher, and E. Rietz. 1975. Chemical composition and physical properties of humic substances. Pp. 1-213. IN J. E. Gieseking (ed.) Soil components. Vol. 1 Organic components. Springer-Verlag, New York.

Flanagan, P. W., and K. Van Cleve. 1983. Nutrient cycling in relation to decomposition and organic matter quality in taiga ecosystems. Canadian Journal of Forest Research 13: 795-817.

Fogel, R., and K. Cromack, Jr. 1977. Effect of habitat and substrate quality on Douglas fir litter decomposition in western Oregon. Canadian Journal of Botany 55: 1632-1640.

Forsythe, G. E., M. A. Malcolm, and C. B. Moler. 1977. Computer methods for mathematical computations. Prentice-Hall, Inc. Englewood Cliffs, NJ.

Fowells, H. A. (ed.). 1965. Silvics of Forest Trees of the United States. USDA Forest Service, Agric. Hndbk 271.

Gholz, H. L. 1982. Environmental limits on aboveground net primary production, leaf area, and biomass in vegetation zones of the Pacific Northwest. Ecology 63: 469-481.

Gosz, J. R. 1981. Nitrogen cycling in coniferous ecosystems. pp. 405-426. IN F. E. Clark and T. Rosswall (eds.) Terrestrial Nitrogen Cycles. Ecological Bulletins 33, Stockholm.

Gosz, J. R., G. E. Likens, and F. H. Bormann. 1976. Organic matter and nutrient dynamics of the forest and forest floor in the Hubbard Brook Forest. Oecologia 22: 305-320.

Graham, S. A., R. P. Harrison, and C. E. Westell. 1961. Aspen, phoenix trees of the Lake States. University of Michigan Press, Ann Arbor, Michigan.

Harms, W. R., H. T. Schreuder, D. D. Hook, C. L. Brown, and F. W. Shropshire. 1980. The effects of flooding on the swamp forest in Lake Ocklawaha, Florida. Ecology 61:1412-1421.

Heal, O. W., P. M. Latter, and G. Howson. 1978. A study of the rates of decomposition of organic matter. pp. 136-159. In O. W. Heal and D. F. Perkins (eds.) Production Ecology of British Moors and Montane Grasslands. Ecological Studies 27, Springer-Verlag, New York.

Hinckley, T. M., J. P. Lassoie, and S. W. Running. 1978. Temporal and spatial variations in water status of forest trees. Forest Science Monograph 20.

Houghton, R. A., J. E. Hobbie, J. M. Melillo, B. Moore, B. J. Peterson, G. R. Shaver, and G. M. Woodwell. 1983. Changes in the carbon content of terrestrial biota and soils between 1860 and 1980: a net release of CO_2 to the atmosphere. Ecol. Monogr. 53: 235-262.

Howard, P. J. A., and D. M. Howard. 1974. Microbial decomposition of tree and shrub leaf litter. I. Weight loss and chemical composition of decomposing litter. Oikos 25: 341-352.

Hsiao, T. C. 1973. Plant responses to water stress. Ann. Rev. Plant Physiol. 24:519-570.

Hunt, H. W. 1977. A simulation model for decomposition in grasslands. Ecology 58: 469-484.

Ingestad, T., A. Aronsson, and G. I. Agren. 1981. Nutrient flux density model of mineral nutrition in conifer ecosystems. Studia Forestalia Svecica 16: 61-71.

Jenny, H. 1941. Factors of Soil Formation. McGraw-Hill, New York.

Jenny, H., S. P. Gessel, and T. Bingham. 1949. Comparative study on decomposition rates of organic matter in temperate and tropical regions. Soil Sci. 68: 419-432.

Jenny, J. 1980. The Soil Resource. Origin and Behavior. Springer-Verlag, New York.

Johnson, W. C., and D. M. Sharpe. 1983. The ratio of total to merchantable forest biomass and its application to the global carbon budget. Can. J. For. Res. 13: 372-383.

Juma, N. G., and E. A. Paul. 1981. Uses of tracers and computer simulation techniques to assess mineralization and immobilization of soil nitrogen. pp. 145-154. IN M. J. Fissel and J. A. Van Veen (eds.) Simulation of nitrogen behaviour of soil-plant systems. Wageningen, The Netherlands: Centre for Agricultural Publishing and Documentation.

Kennedy, H. E., Jr., and Krinard, R. M. 1974. Mississippi River flood's impact on natural hardwood forests and plantations. U.S. For. Serv. Res. Note (South For. Exp. Stn.) 177, 6 pp.

Kimmins, J. P., and K. Schoullar. 1979. ORCYTE: A computer simulation approach to evaluating the effect of whole-tree harvesting on the nutrient budget in Northwest forests. Pp. 266-273 IN S. P. Gessel, R. M. Kenady, and W. A. Atkinson, (eds.). Proc., Forest Fertilization Conference. Contribution No. 40, College of Forest Resources, University of Washington, Seattle.

Kittredge, J. 1948. Forest Influences. Dover Publications, Inc., New York.

Leak, W. B., and R. W. Wilson. 1958. Regeneration after cutting of old growth northern hardwoods in New Hampshire. U.S. Forest Service Northeastern Forest Experiment Station Paper 103.

Little, E. L. 1971. Atlas of United States Trees, Vol. 1. Conifers and important hardwoods. U.S. Forest Service Miscellaneous Publication No. 146.

Little, E. L. 1977. Atlas of United States Trees, Vol. 4. Minor eastern hardwoods. U.S. Forest Service Miscellaneous Publication No. 1342.

Longwell, T. J., W. L. Parks, and M. E. Springer. 1963. Moisture characteristics of Tennessee soils. Bulletin 367, University of Tennessee, Agricultural Experiment Station, Knoxville, TN. 46 pp.

Lousier, J. D., and D. Parkinson. 1976. Litter decomposition in a cool temperate forest. Canadian Journal of Botany 54: 419-436.

MacLean, D. A. and R. W. Wein. 1978. Weight loss and nutrient changes in decomposing litter and forest floor material in New Brunswick forest stands. Canadian Journal of Botany 56: 2730-2749.

Mann, L. K., and W. M. Post. 1980. Modeling the effect of drought on forest growth and composition. Bulletin of the Ecological Society of America 61: 80.

Marks, P. L. 1974. The role of pin cherry (Prunus pensylvancia L.) in the maintenance of stability in northern hardwood ecosystems. Ecological Monographs 44: 73-88.

Marquis, D. A. 1965. Regeneration of birch and associated hardwoods after patch cutting. U.S. Forest Service Research Paper NE-32.

Marquis, D. A. 1967. Clearcutting in northern hardwoods: Results after 30 years. U.S. Forest Service Research Paper NE-85.

McClaugherty, C. A., J. Pastor, J. D. Aber, and J. M. Melillo. 1984a. Forest litter decomposition in relation to soil nitrogen dynamics and litter quality. Ecology 66:266-275.

McQuilken, R. A. 1975. Growth of four types of white oak reproduction after clearcutting in the Missouri Ozarks. U.S. Forest Service Research Paper NC-116.

Meentemeyer, V. 1978. Macroclimate and lignin control of litter decomposition rates. Ecology 59: 465-472.

Melillo, J. M. 1981. Nitrogen cycling in deciduous forests. pp. 427-443. IN F. E. Clark and T. Rosswall (eds.) Terrestrial Nitrogen Cycles. Ecological Bulletin (Stockholm) 33.

Melillo, J. M., J. D. Aber, and J. F. Muratore. 1982. Nitrogen and lignin control of hardwood leaf litter decomposition dynamics. Ecology 63: 621-626.

Minderman, G. 1968. Addition, decomposition and accumulation of organic matter in forests. Journal of Ecology 56: 355-362.

Mitchell, H. L., and R. F. Chandler. 1939. The nitrogen nutrition and growth of certain deciduous trees of northeastern United States. Black Rock Forest Bulletin No. 11.

Morrow, P. A., and R. O. Slatyer. 1971. Leaf resistance measurements with diffusion parameters. Precautions in calibration and use. Agricultural Meteorology 8:223-233.

Olson, J. S. 1963. Energy storage and the balance of producers and decomposers in ecological systems. Ecology 44: 322-331.

Olson, J. S. 1981. Carbon balance in relation to fire regimes. pp. 327-378. IN H. A. Mooney, T. M. Bonnicksen, N. L. Christensen, J. E. Lotan, and W. A. Reiners (eds.) Fire regimes and ecosystem properties. USDA Forest Service GTR WO-26.

Pandey, V., and J. S. Singh. 1982. Leaf-litter decomposition in an oak-conifer forest in Himalaya: The effects of climate and chemical composition. Forestry 55: 47-59.

Pastor, J., J. D. Aber, C. A. McClaugherty, and J. M. Melillo. 1982. Geology, soils, and vegetation of Blackhawk Island, Wisconsin. Am. Midl. Nat. 108: 266-277.

Pastor, J., J. D. Aber, C. A. McClaugherty, and J. M. Melillo. 1981. Aboveground production and N and P cycling along a nitrogen mineralization gradient on Blackhawk Island, Wisconsin. Ecology 65: 256-268.

Pastor, J., and W. M. Post. 1984. Calculating Thornthwaite's and Mather's AET using an approximating function. Canadian Journal of Forest Research 14: (466-467).

Peevy, W. J., and A. G. Norman. 1948. Influence of composition of plant materials on properties of the decomposed residues. Soil Science 65: 209-226.

Penman, H. L. 1948. Natural evaporation from open water, soil, and grass. Proc., Royal Society of London, Series A 193:120-145.

Phillips, M., H. D. Weike, and N. R. Smith. 1930. The decomposition of lignified materials by soil microorganisms. Soil Science 30: 383-390.

Pinck, L. A., F. E. Ailison, and M. S. Sherman. 1950. Maintenance of soil organic matter. II. Losses of carbon and nitrogen from young and mature plants during decomposition in soil. Soil Science 69: 391-401.

Post, W. M., W. R. Emanuel, P. J. Zinke, and A. G. Stangenberger. 1982. Soil carbon pools and world life zones. Nature 298: 156-159.

Raup, H. 1941. Botanical problems in boreal America. Botanical Review 7:147-248.

Reich, P. B., and T. M. Hinckley. 1980. Water relations, soil fertility and plant nutrient composition of a pygmy oak ecosystem. Ecology 61:400-416.

Rosenzweig, M. L. 1968. Net primary productivity of terrestrial communities: prediction from climatological data. American Naturalist 102: 67-74.

Sander, I. L., and F. B. Clark. 1971. Reproduction of upland hardwood forests in the Central States. U.S. Forest Service Agriculture Handbook No. 405.

Seastedt, T. R., and C. M. Tate. 1981. Decomposition rates and nutrient contents of arthropod remains in forst litter. Ecology 62: 13-19.

Shugart, H. H., and D. C. West. 1977. Development of an Appalachian deciduous forest succession model and its application to assessment of the impact of the chestnut blight. Journal of Environmental Management 5: 161-179.

Shugart, H. H., and D. C. West. 1979. Size and pattern of simulated forest stands. Forest Science 25:120-122.

Shugart, H. H. 1984. A Theory of Forest Dynamics. Springer-Verlag, New York.

Smith, O. L. 1982. Soil microbiology: a model of decomposition and nutrient cycling. CRC Press, Boca Raton, Florida.

Sollins, P., D. E. Reichle, and J. S. Olson. 1973. Organic matter budget and model for a southern Appalachian Liriodendron forest. EDFB/IBP-73/2.

Solomon, S. M., D. C. West, and J. A. Solomon. 1981. Simulating the role climate change and species immigration in forest succession. pp. 154-177. IN D. C. West, H. H. Shugart, D. B. Botkin. Forest Succession, Springer-Verlag, New York.

Solomon, A. M., M. L. Tharp, D. C. West, G. E. Taylor, J. W. Webb, and J. L. Trimble. 1984. Response of unmanaged forests to CO_2-induced climate change: available information initial tests, and data requirements. USDOE, Off. Energy Res., CO_2 Res. Div., Washington, DC DOE/NBB-0053-TR009.

Staaf, H.. and B. Berg. 1982. Accumulation and release of plant nutrients in decomposing Scots pine needle litter. Canadian Journal of Botany 60:1561-1568.

Stransky, J. J., and D. R. Wilson. 1964. Terminal elongation of loblolly and shortleaf pine seedlings under soil moisture stress. Proc., Soil Sci. Soc. Am. 28:439-440.

Stevenson, F. J. 1982. Humus chemistry. Genesis, Composition, Reactions. John Wiley and Sons, New York.

Sucoff, E. 1972. Water potential in red pine: soil moisture, evapotranspiration, moisture, and crown position. Ecology 53:681-686.

Thornthwaite, C. W., and J. R. Mather. 1957. Instructions and tables for computing potential evapotranspiration and the water balance. Publications in Climatology 10: 183-311.

Vitousek, P. M., J. R. Gosz, C. C. Grier, J. M. Melillo, and W. A. Reiners. 1982. A comparative analysis of potential nitrification and nitrate mobility in forest ecosystem. Ecological Monographs 52:155-177.

Weinstein, D. A., H. H. Shugart, and D. C. West. 1982. The long-term nutrient retention properties of forest ecosystems: A simulation investigation. ORNL/TM-8472, Oak Ridge, Tennessee.

Wieder, R. K., and G. E. Lang. 1982. A critique of the analytical methods used in examining decomposition data obtained from litter bags. Ecology 63: 1636-1642.

Woodwell, G. M., R. H. Whittaker, W. A. Reiners, G. E. Likens, C. C. Delwicke, and D. B. Botkin. 1978. The biota and the world carbon budget. Science 199: 141-146.

Zahner, R., and A. R. Stage. 1966. A procedure for calculating daily moisture stress and its utility in regressions of tree growth on weather. Ecology 47:64-74.

Zinke, P. J., A. G. Stangenberger, W. M. Post, W. R. Emanuel and J. S. Olson. 1983. Worldwide organic soil carbon and nitrogen data. ORNL/TM-8857.

APPENDIX A

FORTRAN CODE

```
C
C
C
C        A LINKED FOREST PRODUCTIVITY-SOIL WATER, CARBON, AND NITROGEN
C     MODEL WRITTEN BY JOHN PASTOR AND W.M. POST, ENVIRONMENTAL
C     SCIENCES DIVISION, OAK RIDGE NATIONAL LABORATORY, OAK RIDGE,
C     TENNESSEE 37831, USA.
C        WRITTEN IN FORTRAN TO RUN ON THE ORNL IBM 3033,
C     THE MODEL IS BASED ON THE PREVIOUS MODELS OF
C     BOTKIN ET AL. (1972. J. ECOL. 60:849-872) AND SHUGART AND WEST
C     (1977. J. ENVIRON. MGMT. 5: 161-179). FULL DOCUMENTATION IS
C     GIVEN IN PASTOR AND POST (1985. ORNL/TM - 9519).
C
C
C                         MAIN PROGRAM
C
C
C     THE MAIN PROGRAM ESTABLISHES ALL COMMON BLOCKS,
C     THE SEEDS FOR THE RANDOM NUMBER GENERATOR,
C     AND CALLS SUBROUTINES IN ORDER OF EXECUTION.
C     ALL CALCULATIONS OF BIOLOGICAL INTEREST ARE DONE IN THE
C     SUBROUTINES.
C
      COMMON/WATER/T(12),VT(12),RT(12),R(12),VR(12),FC,DRY,BGS,EGS,PLAT,
     1FJ,AET
       COMMON/FOREST/NTREES(100),DBH(1500),IAGE(1500),KSPRT(100),
     > NEWTR(100),SUMLA(700),NEW(100),SWTCH(5)
      COMMON/PARAM/AAA(100,6),DMAX(100),DMIN(100),B3(100),B2(100),
     > ITOL(100),AGEMX(100),G(100),SPRTND(100),SPRTMN(100),
     1SPRTMX(100),SWITCH(100,5),MPLANT(100),D3(100),FROST(100),
     1TL(100),CM1(100),CM2(100),CM3(100),CM4(100),CM5(100),
     2FWT(100),SLTA(100),SLTB(100),RTST(100),FRT(100)
      COMMON/CONST/NSPEC,DEGD
      COMMON/DEAD/NOGRO(1500),NTEMP(1500)
      COMMON/PROD/AWP(1500)
      COMMON/COUNT/NTOT,NYEAR,KPRNT,NMAX,KLAST,NWRITE,KWRITE
      COMMON/TEMP/DTEMP(1500),ITEMP(1500)
      COMMON/SEED/USEED(15)
      COMMON/INTERP/IPOLAT,X(10)
      COMMON/LINEAR/TSAV(45,12),VTSAV(45,12),RSAV(45,12),VRSAV(45,12)
      COMMON/DCMP/AVAILN,TYL(20),C(100,15),FDAT(20,10),FF(20,3),
     1 NCOHRT,HCN,BASESC,BASESN,SCO2,TYLN
      COMMON/GMLT/SMGF(100),SNGF(100),DEGDGF(100)
      INTEGER USEED
      LOGICAL SWITCH,SWTCH
C.....
C.....SEEDS FOR RANDOM NUMBER GENERATOR
C.....
```

APPENDIX A (CONTINUED)

```
C.....USEED(1) - KILL- AGE DEPENDENT MORTALITY
C.....USEED(2) - KILL- SLOW GROWTH MORTALITY
C.....USEED(3) - NOT CURRENTLY USED
C.....USEED(4) - BIRTH- SELECT NUMBER OF TREES TO SPROUT
C.....USEED(5) - NOT CURRENTLY USED
C.....USEED(6) - NOT CURRENTLY USED
C.....USEED(7) - BIRTH- USED IN SMALL MAMMAL SWITCH
C.....USEED(8) - NOT CURRENTLY USED
C.....USEED(9) - BIRTH- DETERMINES THE NUMBER OF SEEDLINGS TO PLANT
C.....USEED(10) - NOT CURRENTLY USED
C.....USEED(11) - BIRTH- USED TO CALCULATE DBH FOR SEEDLINGS
C.....USEED(12) AND (13) - TEMPE- STOCHASTIC VARIATION OF TEMPERATURE
C.....USEED(14) AND (15) - MOIST- STOCHASTIC VARIATION OF RAINFALL
C.....
C.....
C.....INITIALIZE SEED FOR RANDOM NUMBER GENERATOR
C.....
      USEED(1) = 75364
      USEED(2) = 82625
      USEED(3) = 79154
      USEED(4) = 79324
      USEED(5) = 31697
      USEED(6) = 91917
      USEED(7) = 89819
      USEED(8) = 37517
      USEED(9) = 17119
      USEED(10) = 72641
      USEED(11) = 53797
      USEED(12) = 91712
      USEED(13) = 73319
      USEED(14) = 51291
      USEED(15) = 92761
C.....
C.....IPLOT - CURRENT PLOT
C.....KYR - CURRENT YEAR
C.....NYEAR - NUMBER OF YEARS SIMULATED
C.....KLAST - NUMBER OF PLOTS SIMULATED
C.....
      IPLOT = 0
C.....
C.....READ INPUT DATA
C.....
      CALL INPUT
C.....
C.....BEGIN PLOT LOOP
C.....
       DO 60 K=1,KLAST
C.....
C.....INITIALIZE ARRAYS TO START ON BARE PLOT
C.....
```

APPENDIX A (CONTINUED)

```
      CALL PLOTIN(IPLOT)
      KYR=0
C.....
C.....ANNUAL LOOP WITHIN EACH PLOT
C.....
        DO 50 I=1,NYEAR
           KYR = I
      CALL TEMPE(DEGD,KYR)
      CALL MOIST(KYR)
      CALL DECOMP(KYR)
      CALL GMULT(KYR)
      CALL BIRTH(KYR)
      CALL GROW(KYR)
      CALL KILL(KYR)
      IF(KYR.EQ.1) CALL OUTPUT(KYR,IPLOT)
      IF(MOD(KYR,KPRNT) .EQ. 0) CALL OUTPUT(KYR,IPLOT)
   50       CONTINUE
   60       CONTINUE
      STOP
      END
```

APPENDIX A (CONTINUED)

```
C
C                    SUBROUTINE BIRTH
C
C
C     SUBROUTINE BIRTH CALCULATES SEEDLING AND SPROUT BIRTH BASED ON
C     SPECIES FECUNDITY, SEEDBED CONDITIONS, SUSCEPTIBILITY TO BROWSING,
C     AND THE DEGREE TO WHICH LIGHT, SOIL MOISTURE, AND DEGREE DAYS ARE
C     LESS THAN OPTIMUM FOR GROWTH. SOIL MOISTURE AND DEGREE DAY
C     MULTIPLIERS ARE SUPPLIED BY SUBROUTINE GMULT.
C     A SPECIES CAN HAVE SPROUTS IF AT LEAST ONE
C     TREE WITH DIAMETER BETWEEN SPRTMN AND SPRTMX DIED LAST
C     YEAR (KSPRT INCREMENTED BY 1 IN KILL).
C     RANDOM NUMBERS USED TO DETERMINE OCCURENCE OF BROWSING, NUMBERS
C     OF SEEDLINGS AND SPROUTS, AND DBH SUPPLIED BY URAND.
C
      SUBROUTINE BIRTH(KYR)
      COMMON/WATER/T(12),VT(12),RT(12),R(12),VR(12),FC,DRY,BGS,EGS,PLAT,
     1FJ,AET
      COMMON/FOREST/NTREES(100),DBH(1500),IAGE(1500),KSPRT(100),
     > NEWTR(100),SUMLA(700),NEW(100),SWTCH(5)
      COMMON/PARAM/AAA(100,6),DMAX(100),DMIN(100),B3(100),B2(100),
     > ITOL(100),AGEMX(100),G(100),SPRTND(100),SPRTMN(100),
     1SPRTMX(100),SWITCH(100,5),MPLANT(100),D3(100),FROST(100),
     2TL(100),CM1(100),CM2(100),CM3(100),CM4(100),CM5(100),
     3FWT(100),SLTA(100),SLTB(100),RTST(100),FRT(100)
      COMMON/CONST/NSPEC,DEGD
      COMMON/DEAD/NOGRO(1500),NTEMP(1500)
      COMMON/COUNT/NTOT,NYEAR,KPRNT,NMAX,KLAST,NWRITE,KWRITE
      COMMON/TEMP/DTEMP(1500),ITEMP(1500)
      COMMON/SEED/USEED(15)
      COMMON/GMLT/SMGF(100),SNGF(100),DEGDGF(100)
      INTEGER USEED
      LOGICAL SWITCH,SWTCH
C.....
C.....INITIALIZE FOLIAGE BIOMASS (FOLW) AND FOLIAGE AREA (FOLA)
C.....
         FOLW = 0.
         FOLA = 0.
         NL = 1
C.....
C.....CALCULATE LEAF WEIGHT IN G/PLOT (FOLW; ABER ET AL. 1982.
C.....FOR.SCI. 28:31-45) AND LEAF AREA INDEX (FOLA; SOLLINS ET AL. 1973.
C.....EDFB-IBP-73-2).
C.....
```

APPENDIX A (CONTINUED)

```
         DO 30 J=1,NSPEC
            IF (NTREES(J).EQ.0) GO TO 30
            NU = NL+NTREES(J)-1
            RET=FRT(J)
            DO 20 K=NL,NU
            AGE=IAGE(K)
            IF(AGE.LT.RET) RET=AGE
                FOLW=FOLW+(((SLTA(J)+SLTB(J)*DBH(K))/2.)
     &              **2*3.14*FWT(J)*RET)
                FOLA=FOLA+1.9283295E-4*DBH(K)**2.129
   20          CONTINUE
            NL = NL+NTREES(J)
   30       CONTINUE
C.....
C.....CALCULATE AMOUNT OF LIGHT AT FOREST FLOOR (% FULL SUNLIGHT)
C.....(ABER ET AL. 1982. FOREST SCI. 28:31-45;
C.....PASTOR AND MCCLAUGHERTY, UNPUBL.)
C.....
            AL=1.0*EXP(-FOLW/93750.)
C.....
C.....TOTAL NUMBER OF TREES IN STAND
C.....
         NTOT = NL-1
C.....
C.....DETERMINE WHICH SPECIES ARE ELIGIBLE FOR PLANTING THIS YEAR
C.....
C.....SWITCH 1 IS TRUE IF THE SPECIES REQUIRES LEAF LITTER FOR
C.....SUCCESSFUL RECRUITMENT
C.....SWITCH 2 IS TRUE IF THE SPECIES REQUIRES MINERAL SOIL
C.....SWITCH 3 IS TRUE IF THE SPECIES RECRUITMENT IS REDUCED BY HOT YEAR
C.....SWITCH 4 IS TRUE IF THE SPECIES IS A PREFERRED FOOD OF DEER
C.....OR SMALL MAMMALS
C.....SWITCH 5 REDUCES SEEDING RATE OF DESIRABLE MAST
C.....
         DO 40 J=1,5
            SWTCH(J) = .TRUE.
   40       CONTINUE
      SWTCH(3) = .FALSE.
C.....
C.....SET SWITCHES BASED ON VALUE OF LF AREA AND RANDOM NUMBER
C.....
         IF (FOLA.GE..1) SWTCH(1) = .FALSE.
         IF (FOLA.LE..2) SWTCH(2) = .FALSE.
C.....
C.....BROWSE - A RANDOM NUMBER SIMULATING THE OCCURENCE OF BROWSING
C.....
      YFL=URAND(USEED(7))
      BROWSE=YFL
         IF (BROWSE.GT..5) SWTCH(4) = .FALSE.
      IF(FOLA .LE. .05) SWTCH(5) = .FALSE.
         NW = 0
```

APPENDIX A (CONTINUED)

```
C.....
C.....SELECT ELIGIBLE SPECIES
C.....
         DO 60 J=1,NSPEC
C.....
C.....END RECRUITMENT OF ASPEN, PIN CHERRY AND MOST PINES IF AVAILABLE
C.....LIGHT IS < 60% OF FULL SUNLIGHT AND RECRUITMENT OF PAPER
C.....BIRCH AND WHITE PINE IF AVAILABLE LIGHT IS < 30% OF FULL SUNLIGHT
C.....
      IF(AL.LT..60.AND.J.EQ.20) GO TO 60
      IF(AL.LT..30.AND.J.EQ.25) GO TO 60
      IF(AL.LT..60.AND.J.EQ.58) GO TO 60
      IF(AL.LT..60.AND.J.EQ.59) GO TO 60
      IF(AL.LT..60.AND.J.EQ.60) GO TO 60
      IF(AL.LT..60.AND.J.EQ.30) GO TO 60
      IF(AL.LT..60.AND.J.EQ.31) GO TO 60
      IF(AL.LT..60.AND.J.EQ.32) GO TO 60
      IF(AL.LT..30.AND.J.EQ.33) GO TO 60
      IF(AL.LT..60.AND.J.EQ.34) GO TO 60
      IF(AL.LT..60.AND.J.EQ.35) GO TO 60
      IF(AL.LT..30.AND.J.EQ.55) GO TO 60
            DO 50 K=3,5
               IF (SWITCH(J,K).AND.SWTCH(K)) GO TO 60
   50          CONTINUE
C.....
C.....ALLOW ONLY THOSE SPECIES WHOSE DEGREE DAY TOLERANCES SPAN
C.....THE SIMULATED DEGREE DAYS THIS YEAR TO BE ELIGIBLE FOR SEEDING
C.....
      IF(DEGD .LE. DMIN(J) .OR. DEGD .GE. DMAX(J)) GO TO 60
C.....
C.....ALLOW ONLY THOSE SPECIES WHOSE FROST TOLERANCE IS LESS THAN THE
C.....JANUARY MEAN TEMPERATURE TO BE ELIGIBLE FOR SEEDING
C.....
      IF(FROST(J) .GT. RT(1)) GO TO 60
C.....
C.....PLACE ELIGIBLE SPECIES NUMBERS IN ARRAY NEWTR
C.....
            NW = NW+1
            NEWTR(NW) = J
   60       CONTINUE
C.....
C.....CHECK TO SEE IF THERE ARE ANY NEW TREES
C.....
         IF (NW.EQ.0) GO TO 140
C.....
C.....PLACE IAGE, DBH, AND NOGRO INTO TEMPORARY ARRAYS
C.....
```

APPENDIX A (CONTINUED)

```
         DO 70 I=1,NTOT
            ITEMP(I) = IAGE(I)
            DTEMP(I) = DBH(I)
            NTEMP(I) = NOGRO(I)
   70       CONTINUE
C.....
C.....BEGIN MAIN LOOP FOR PLANTING
C.....
         DO 140 K=1,NW
         NSP=NEWTR(K)
C.....
C.....CALCULATE SEEDLING LIGHT MULTIPLIERS
C.....(SHUGART AND WEST. 1977. J. ENV. MGMT. 5:161-179)
C.....IF ITOL IS LESS THAN 2, SPECIES IS SHADE TOLERANT
C.....
         SLITE=1.5*(1.-EXP(-1.136*(AL-.08)))
         IF(ITOL(NSP).LT.2) SLITE=1.0-EXP(-4.64*(AL-.05))
         IF(SLITE.LE.0.) SLITE=0.
C.....
C.....REDUCE MAXIMUM NUMBER OF SEEDLINGS TO THE EXTENT THAT LIGHT,
C.....SOIL MOISTURE, AND DEGREE DAYS ARE LESS THAN OPTIMUM FOR
C.....GROWTH OF EACH SPECIES
C.....
       YFL=URAND(USEED(9))
       NPLANT=MPLANT(NSP)*SLITE*SMGF(NSP)*DEGDGF(NSP)*YFL
C.....
C.....SEE IF ANY STUMPS OF THIS SPECIES ARE AVAILABLE FOR SPROUTING
C.....
       IF(KSPRT(NSP).LE.0) GO TO 75
C.....
C.....SEE IF SPECIES CAN STUMP SPROUT
C.....
       IF(SPRTND(NSP).LE.0) GO TO 75
C.....
C.....IF AVAILABLE LIGHT IS GREATER THAN 50% OF FULL SUNLIGHT,
C.....DETERMINE NUMBER OF STUMP SPROUTS AND ADD TO NPLANT
C.....
       YFL=URAND(USEED(4))
       IF(AL.GE..50)
     & NPLANT=NPLANT+(SPRTND(NSP)*SLITE*SMGF(NSP)*DEGDGF(NSP)*
     & KSPRT(NSP)*YFL)
  75   CONTINUE
         NSUM = 0
         DO 80 I=1,NSP
   80       NSUM = NSUM+NTREES(I)
C.....
C.....PLANT SEEDLINGS AND SPROUTS
C.....
```

APPENDIX A (CONTINUED)

```
         NL = NSUM+1
         NUP = NTOT
         IF(NPLANT.EQ.0) GO TO 140
         DO 90 J=1,NPLANT
            NTOT = NTOT+1
            IF (NTOT.GT.1500) CALL ERR6
            NSUM = NSUM+1
            NTREES(NSP) = NTREES(NSP)+1
            ITEMP(NSUM) = 0
C.....
C.....CALCULATE DBH FOR NEW TREES. DBH = 1.42CM +/- RANDOM AMOUNT
C.....
       SIZE=1.27
       YFL=URAND(USEED(11))
            DTEMP(NSUM) = SIZE+.30*(1.0-YFL)**3
            NTEMP(NSUM) = 0
   90       CONTINUE
         IF (NL.GT.NUP) GO TO 110
         N1 = NSUM+1
         DO 100 L=NL,NUP
            DTEMP(N1) = DBH(L)
            ITEMP(N1) = IAGE(L)
            NTEMP(N1) = NOGRO(L)
            N1 = N1+1
  100       CONTINUE
C.....
C.....REINITIALIZE ORIGINAL DBH AND AGE ARRAYS - INCLUDING NEW TREES
C.....
C.....
  110    DO 120 I=1,NTOT
            IAGE(I) = ITEMP(I)
            DBH(I) = DTEMP(I)
            NOGRO(I) = NTEMP(I)
  120       CONTINUE
  140    CONTINUE
C.....
C.....INCREMENT AGES BY ONE YEAR
C.....
      DO 150 I=1,NTOT
      IAGE(I) = IAGE(I)+1
  150 CONTINUE
C.....
C.....REINITIALIZE ARRAY KSPRT
C.....
      DO 160 I=1,NSPEC
      KSPRT(I)=0
  160 CONTINUE
      RETURN
      END
```

APPENDIX A (CONTINUED)

```
C
C                    SUBROUTINE DECOMP
C
C     SUBROUTINE DECOMP CALCULATES CARBON AND NITROGEN FLOWS THROUGH
C     SOIL. AVAILABLE N (AVAILN) IS USED IN GMULT TO CALCULATE
C     SOIL NITROGEN GROWTH MULTIPLIERS. AET IS FED IN FROM MOIST.
C     THIS YEAR'S LEAF, TWIG, ROOT, AND WOOD LITTER IS FED IN FROM KILL
C     (ARRAY TYL). THE SIMULATION STARTS ON BARE GROUND (ONLY HUMUS
C     PRESENT. BASESC AND BASESN ARE STARTING HUMUS WEIGHT AND N
C     CONTENTS READ IN INPUT). TWO TYPES OF SOIL ORGANIC MATTER ARE
C     RECOGNIZED: THAT WHICH IS IMMOBILIZING N (LITTER COHORTS) AND
C     THAT WHICH IS MINERALIZING N (HUMUS).
C
C
      SUBROUTINE DECOMP(KYR)
      COMMON/WATER/T(12),VT(12),RT(12),R(12),VR(12),FC,DRY,
     1BGS,EGS,PLAT,FJ,AET
      COMMON/DCMP/AVAILN,TYL(20),C(100,15),FDAT(20,10),FF(20,3),
     1NCOHRT,HCN,BASESC,BASESN,SCO2,TYLN
C.....
C.....INITIALIZATION
C.....ALL VARIABLES IN T/HA
C.....FCO2 - CO2-C FROM LITTER IMMOBILIZING N
C.....HCO2 - CO2-C FROM HUMUS
C.....SCO2 - TOTAL SOIL CO2-C
C.....FFW - NEW WELL DECAYED WOOD COHORT
C.....TNIMOB - TOTAL N IMMOBILIZATION
C.....TNMIN - TOTAL N MINERALIZATION
C.....AVAILN - AVAILABLE N
C.....ASHFREE - ASHFREE WEIGHT OF LEAF LITTER
C.....TYLC - LEAF LITTER C CONTENT
C.....TYLN - LEAF LITTER N CONTENT
C.....TYLNC - LEAF LITTER N:C
C.....FF - WEIGHTS AND N CONTENT OF FOREST FLOOR BY LITTER TYPE
C.....AET - ACTUAL EVAPOTRANSPIRATION IN MM (FROM MOIST)
C.....
C.....
      FCO2=0.
      HCO2=0.
      SCO2=0.
      FFW=0.
      TNIMOB=0.
      AVAILN=0.
      ASHFRE=0.
      TYLC=0.
      TYLN=0.
      TYLNC=0.
      DO 9 I=1,20
      DO 9 J=1,3
    9 FF(I,J)=0.
```

APPENDIX A (CONTINUED)

```
C.....
C.....CALCULATE LITTER C,N, AND N:C
C.....
      DO 8 I=1,12
C.....
C.....CALCULATE ASH-FREE WEIGHT
C.....
      ASHFRE=ASHFRE+(TYL(I)*FDAT(I,10))
C.....
C.....CALCULATE LITTER NITROGEN CONTENT
C.....
   8    TYLN=TYLN+(TYL(I)*FDAT(I,2))
C.....
C.....CALCULATE LITTER C (48% OF ASH-FREE WEIGHT)
C.....
       TYLC = .48*ASHFRE
      IF(TYLC.EQ.0.)TYLC=1.0
C.....
C.....CALCULATE LITTER N:C
C.....
      TYLNC = TYLN/TYLC
C.....
C.....CALCULATE AET MULTIPLIER
C.....
      XAET=AET
      IF(XAET.GT.600.) XAET=600.
      AETM = (-1.*XAET)/(-1200. + XAET)
C.....
C......CREATE NEW COHORTS
C.....THE FIRST ROW OF THE C ARRAY HOLDS DATA ON HUMUS.
C.....ROWS 2 THROUGH NCOHRT HOLD DATA ON LITTER COHORTS
C.....C(I,1) - WEIGHT (T/HA)
C.....C(I,2) - N CONTENT (T/HA)
C.....C(I,3) - T N IMMOBILIZED/T WEIGHT LOSS
C.....C(I,4) - CRITICAL %N. WHEN COHORT REACHES THIS IT IS
C.....         TRANSFERRED TO HUMUS OR, IF WOOD, TO A WELL
C.....         DECAYED WOOD CATEGORY, WHERE IT DECAYS FURTHER
C.....         UNTIL A SECOND CRITICAL %N IS REACHED. IT IS
C.....         THEN TRANSFERRED TO HUMUS
C.....C(I,5) - LITTER TYPE. 1 THROUGH 12 ARE LEAVES, 13 IS ROOT,
C.....         14 AND 15 ARE WOOD, 16 IS TWIGS, 17 IS WELL DECAYED WOOD,
C.....         AND 18 IS HUMUS
C.....C(I,6) - DESTINATION WHEN CRITICAL %N IS REACHED. 1=HUMUS,
C.....         2=WELL DECAYED WOOD
C.....C(I,7) - CURRENT % LIGNIN
C.....C(I,8) AND C(I,9) - LIGNIN DECAY PARAMETERS
C.....C(I,10) - ORIGINAL WEIGHT
C.....C(I,11) - CURRENT % N
C.....
```

APPENDIX A (CONTINUED)

```
      DO 3 I=1,16
      IF(TYL(I).EQ.0.) GO TO 3
      NCOHRT=NCOHRT+1
      IF(NCOHRT.GT.100) CALL ERR10
      C(NCOHRT,1)=TYL(I)
      C(NCOHRT,2)=TYL(I)*FDAT(I,2)
        DO 2 J=3,9
        C(NCOHRT,J)=FDAT(I,J)
   2    CONTINUE
      C(NCOHRT,10)=TYL(I)
      C(NCOHRT,11)=FDAT(I,2)
   3  CONTINUE
C.....
C......CALCULATE DECAY MULTIPLIER, SIMULATING EFFECT OF GAPS ON DECAY
C.....
      TYLL=TYL(17)
      CCLL=1.54+.0457*(FC-DRY)
      IF(TYLL.GT.CCLL)TYLL=CCLL
      DECMLT=1.0+(-.50+.075*(FC-DRY))*(1.0-TYLL/CCLL)
C.....
C.....BYPASS FOREST FLOOR COHORT CALCULATIONS IF THERE IS NO FLOOR
C.....
      IF(NCOHRT.EQ.1) GO TO 15
C.....
C.....LOOP TO CALCULATE LITTER DECAY, N IMMOBILIZATION, LIGNIN DECAY,
C.....AND LITTER CO2 EVOLUTION
C.....
      DO 4 I=2,NCOHRT
C.....
C.....CALCULATE % WT LOSS BASED ON AET AND LIGNIN:N RATIO
C.....
      PWTLOS=(.9804+.09352*AET)-((-.4956+.00193*AET)*(C(I,7)/C(I,11)))
      PWTLOS=(DECMLT*PWTLOS)/100.
      IF(PWTLOS.GT..99) PWTLOS=.99
C.....
C.....WT LOSS OF LARGE WOOD (DBH>10CM) IS 3%;
C.....WT LOSS OF SMALL WOOD IS 10%; WT LOSS
C.....OF WELL DECAYED WOOD IS 5%; WT LOSS
C.....OF TWIGS IS LESS THAN 20%
C.....
      LT=C(I,5)
      IF(LT.EQ.14) PWTLOS=.10
      IF(LT.EQ.15) PWTLOS=.03
      IF(LT.EQ.17) PWTLOS=.05
      IF(LT.EQ.16.AND.PWTLOS.GT..20) PWTLOS=.20
C.....
C.....CALCULATE ACTUAL WT LOSS (T/HA)
C.....
      WTLOSS=PWTLOS*C(I,1)
C.....
C.....CALCULATE N IMMOBILIZATION PER COHRT (UPN)
C.....
```

APPENDIX A (CONTINUED)

```
      UPN=C(I,3)*WTLOSS
C.....
C.....FIND NEW N CONCENTRATION IN COHORT
C.....
      C(I,11)=(C(I,2)+UPN)/(C(I,1)-WTLOSS)
C.....
C.....RETAIN COHORT FOR ANOTHER YEAR OF DECAY AND N IMMOBILIZATION
C.....IF % N IS LESS THAN CRITICAL %N
C.....
      IF(C(I,11).LT.C(I,4)) GO TO 7
C.....
C.....IF COHORT IS TO BE TRANSFERRED (%N GREATER THAN OR EQUAL TO
C.....CRITICAL %N) RECALCULATE WT LOSS AND N IMMOBILIZATION
C.....SO THAT CRITICAL % N IS NOT EXCEEDED
C.....
      WTLOSS=((C(I,4)-C(I,2)/C(I,1))/(C(I,11)-C(I,2)/C(I,1)))*WTLOSS
      UPN=WTLOSS*C(I,3)
C.....
C.....TRANSFER COHORTS
C.....
      IF(C(I,6).NE.1.) GO TO 5
      C(1,1)=C(1,1)+C(I,1)-WTLOSS
      C(1,2)=C(1,2)+C(I,4)*(C(I,1)-WTLOSS)
      C(I,1)=0.
      GO TO 7
C.....
C.....FFW - TEMPORARY VARIABLE ASSIGNED TO WELL DECAYED WOOD COHORT
C.....
   5  FFW=FFW+C(I,1)-WTLOSS
      C(I,1)=0.
C.....
C.....UPDATE COHORTS
C.....
   7  IF(C(I,1).EQ.0.) GO TO 14
      C(I,1)=C(I,1)-WTLOSS
      C(I,2)=C(I,2)+UPN
      C(I,7)=C(I,8)-C(I,9)*(C(I,1)/C(I,10))
C.....
C.....CALCULATE LITTER COHORT CO2 EVOLUTION
C.....
   14 FCO2=FCO2+(WTLOSS*0.48)
C.....
C.....CALCULATE TOTAL IMMOBILIZATION
C.....
      TNIMOB=TNIMOB+UPN
   4  CONTINUE
C.....
C.....THROUGHFALL IS 16% OF LEAF LITTER N (COLE AND RAPP.1982.
C.....PP. 341-410 IN D.E.REICHLE, ED. DYNAMIC PROPERTIES OF
C.....FOREST ECOSYSTEMS. IBP 23. CAMBRIDGE UNIV. PRESS)
C.....AND SUPPLIES SOME OF IMMOBILIZATION DEMANDS
C.....
```

APPENDIX A (CONTINUED)

```
      TNIMOB=TNIMOB-.16*TYLN
C.....
C.....CALCULATE N MINERALIZATION AND HUMUS CO2 EVOLUTION
C.....
C.....THE FOLLOWING STATEMENT BYPASSES MAIN NMIN EQUATION
C.....WHENEVER THERE IS NO LEAF LITTER
C.....
  15  IF(TYLNC.LE.0.0) GO TO 6
C.....
C.....THE FOLLOWING CALCULATES NMIN IN T/HA BASED ON
C.....LITTER N:C (PASTOR ET AL. 1984. ECOLOGY 65: 256-268.)
C.....
      TNMIN=C(1,1)*((-.000379*TYLNC)/(-.02984+TYLNC))*
     &DECMLT*AETM
C.....
C.....SUBTRACT MINERALIZED N FROM HUMUS N POOL
C.....AND CALCULATE HUMUS CO2
C.....
      HNNEW=C(1,2)-TNMIN
      HOMNEW=C(1,1)*(HNNEW/C(1,2))
      HCO2=(C(1,1)-HOMNEW)*0.48
      C(1,1)=HOMNEW
      C(1,2)=HNNEW
C.....
C.....HCN - HUMUS C:N RATIO
C.....
      HCN=(0.48*C(1,1))/C(1,2)
      GO TO 13
C.....
C.....THE FOLLOWING CALCULATES NMIN AND HUMUS CO2 WHENEVER
C.....LITTER = 0. (YR 1)
C.....
 6    TNMIN=C(1,2)*0.035*AETM*DECMLT
      C(1,2)=C(1,2)-TNMIN
      HCO2=C(1,1)*0.035*0.48*AETM*DECMLT
      C(1,1)=C(1,1)-(HCO2/0.48)
      HCN=(0.48*C(1,1))/C(1,2)
C.....
C.....SUBTRACT IMMOBILIZATION FROM NMIN TO
C.....GET AVAILABLE NITROGEN FOR THIS YEAR
C.....
  13  AVAILN=TNMIN-TNIMOB
C.....
C.....CALCULATE TOTAL SOIL RESPIRATION
C.....
      SCO2=FCO2+HCO2
C.....
C.....REMOVE TRANSFERRED COHORTS
C.....
```

APPENDIX A (CONTINUED)

```
      IX=0
      DO 20 I=1,NCOHRT
      IF(C(I,1).EQ.0.) GO TO 16
        DO 12 J=1,11
  12    C(I-IX,J)=C(I,J)
      GO TO 20
  16  IX=IX+1
  20  CONTINUE
      NCOHRT=NCOHRT-IX
C.....
C.....CREATE NEW WELL DECAYED WOOD COHORT
C.....
      IF(FFW.EQ.0.) GO TO 30
      NCOHRT=NCOHRT+1
      IF(NCOHRT.GT.1500) CALL ERR10
      C(NCOHRT,1)=FFW
      C(NCOHRT,2)=FFW*FDAT(17,2)
      DO 22 J=3,9
   22 C(NCOHRT,J)=FDAT(17,J)
      C(NCOHRT,10)=FFW
      C(NCOHRT,11)=FDAT(17,2)
C.....
C.....CALCULATE TOTAL WT AND N CONTENT BY FOREST FLOOR COMPARTMENT
C.....
  30  DO 35 I=1,NCOHRT
      LT=C(I,5)
      FF(LT,1)=C(I,5)
      FF(LT,2)=FF(LT,2)+C(I,1)
      FF(LT,3)=FF(LT,3)+C(I,2)
  35  CONTINUE
      FF(19,1)=19.
      DO 36 LT=1,12
      FF(19,2)=FF(19,2)+FF(LT,2)
      FF(19,3)=FF(19,3)+FF(LT,3)
  36  CONTINUE
      FF(19,2)=FF(19,2)+FF(16,2)+FF(18,2)+FF(13,2)
      FF(19,3)=FF(19,3)+FF(16,3)+FF(18,3)+FF(13,3)
  40  RETURN
      END
```

APPENDIX A (CONTINUED)

```
C
C                        SUBROUTINE ERR
C
C
C     THIS SUBROUTINE IS A LIST OF ERRORS THAT MAY OCCUR IN THE
C     PROGRAM. THE ERRORS FOCUS ON VARIABLES USED AS DO LOOP COUNTERS
C     AND WHICH MAY EXCEED DIMENSIONS OF CERTAIN ARRAYS.
C
      SUBROUTINE ERR
      ENTRY ERR1
      WRITE(6,10)
   10 FORMAT(' STATISTICAL ARRAYS IN SUBROUTINE OUTPUT CAN ONLY
     &HANDLE 100 PLOTS.',/'  REDUCE KLAST OR REDIMENSION ARRAYS.')
      GO TO 110
      ENTRY ERR2
      WRITE(6,20)
   20 FORMAT(' STATISTICAL ARRAYS IN SUBROUTINE OUTPUT CAN ONLY
     &HANDLE 70 LINES',/' OF OUTPUT. REDUCE NYEAR, INCREASE KPRNT,
     &OR REDIMENSION ARRAYS.')
      GO TO 110
      ENTRY ERR3
      WRITE(6,30)
   30 FORMAT(' NUMBER OF SPECIES, NSPEC, HAS EXCEEDED 100 IN INPUT.',/
     &' REDUCE NSPEC OR REDIMENSION ALL ARRAYS IN COMMON BLOCKS',/
     &' PARAM AND GMLT AND APPROPRIATE ARRAYS IN ',/
     &' COMMON BLOCK FOREST.')
      GO TO 110
      ENTRY ERR4
      WRITE(6,40)
   40 FORMAT(' NUMBER OF LITTER COHORTS, NCOHRT, HAS EXCEEDED 100',/
     &' IN SUBROUTINE INPUT. REDUCE NCOHRT OR REDIMENSION C ARRAY.')
      GO TO 110
      ENTRY ERR5
      WRITE(6,50)
   50 FORMAT(' NUMBER OF TREES, NTOT, HAS EXCEEDED 1500 IN KILL.')
      GO TO 110
      ENTRY ERR6
      WRITE(6,60)
   60 FORMAT(' NUMBER OF TREES, NTOT, HAS EXCEEDED 1500 IN BIRTH.')
      GO TO 110
      ENTRY ERR7
      WRITE(6,70)
   70 FORMAT(' NUMBER OF TREES, NTOT, HAS EXCEEDED 1500 IN OUTPUT.')
      GO TO 110
      ENTRY ERR8
      WRITE(6,80)
   80 FORMAT(' NUMBER OF TREES, NTOT, HAS EXCEEDED 1500 IN GROW.')
      GO TO 110
      ENTRY ERR9
      WRITE (6,90)
```

APPENDIX A (CONTINUED)

```
 90  FORMAT(' IHT HAS EXCEEDED 700 IN GROW. AT LEAST ONE TREE',/
    &' IS GREATER THAN 70M TALL. REDIMENSION ARRAY SUMLA.')
     GO TO 110
     ENTRY ERR10
     WRITE(6,100)
100  FORMAT(' THE NUMBER OF LITTER COHORTS, NCOHRT, HAS EXCEEDED',/
    &' 100 IN SUBROUTINE DECOMP. ')
110  STOP
     END
```

APPENDIX A (CONTINUED)

```
C
C                          SUBROUTINE GGNORD
C
C
C     SUBROUTINE GGNORD CALCULATES NORMALLY DISTRIBUTED RANDOM NUMBERS
C     SUPPLIED BY URAND. IT IS CALLED FROM SUBROUTINES TEMPE AND MOIST.
C
      SUBROUTINE GGNORD(NSEED1,NSEED2,Z)
      DIMENSION Z(1)
      DATA PI2/0.62831853E01/
      K = 0
C.....
C.....FIND RANDOM NUMBERS
C.....
      A1 = URAND(NSEED1)
      A2 = URAND(NSEED2)
      K = K+1
C.....
C.....CALCULATE NORMALLY DISTRIBUTED RANDOM NUMBERS.
C.....(EMSHOFF AND SISSON.1970.DESIGN AND USE OF COMPUTER
C.....SIMULATION MODELS. MACMILLAN)
C.....
      Z(K) = SQRT(-.2E01*ALOG(A1))*SIN(PI2*A2)
      K = K+1
      Z(K) = SQRT(-0.2E01*ALOG(A1))*COS(PI2*A2)
      RETURN
      END
```

APPENDIX A (CONTINUED)

```
C
C                         SUBROUTINE GMULT
C
C
C     SUBROUTINE GMULT CALCULATES DEGREE DAY, SOIL MOISTURE, AND SOIL
C     NITROGEN MULTIPLIERS USED IN SUBROUTINES BIRTH AND GROW BASED
C     ON DEGD (SUPPLIED BY TEMPE), FJ (SUPPLIED BY MOIST), AND
C     AVAILN (SUPPLIED BY DECOMP), RESPECTIVELY.
C
      SUBROUTINE GMULT(KYR)
      COMMON/WATER/T(12),VT(12),RT(12),R(12),VR(12),FC,DRY,BGS,EGS,PLAT,
     1FJ,AET
      COMMON/PARAM/AAA(100,6),DMAX(100),DMIN(100),B3(100),B2(100),
     1ITOL(100),AGEMX(100),G(100),SPRTND(100),SPRTMN(100),
     2SPRTMX(100),SWITCH(100,5),MPLANT(100),D3(100),FROST(100),
     3TL(100),CM1(100),CM2(100),CM3(100),CM4(100),CM5(100),
     4FWT(100),SLTA(100),SLTB(100),RTST(100),FRT(100)
      COMMON/CONST/NSPEC,DEGD
      COMMON/DCMP/AVAILN,TYL(20),C(100,15),FDAT(20,10),FF(20,3),
     1NCOHRT,HCN,BASESC,BASESN,SCO2,TYLN
      COMMON/GMLT/SMGF(100),SNGF(100),DEGDGF(100)
C.....
C.....CALCULATE TOTAL NUMBER OF GROWING SEASON DEGREE DAYS
C.....
      TGS = EGS-BGS + 1
C.....
C.....CALCULATE RELATIVE NITROGEN AVAILABILITY,
C.....(ABER ET AL. 1979. CAN.J.FOR.RES. 9:10-14)
C.....FIRST ADDING 5 KG N/HA TO AVAILN FOR PRECIP INPUTS
C.....
      AVAILN = AVAILN+.005
      AVLMC = -170.0 + 4.0*(AVAILN*1000.)
C.....
C.....CALCULATE GROWTH MULTIPLIERS
C.....
      DO 40 I=1,NSPEC
C.....
C.....CALCULATE SPECIES DEGREE DAY MULTIPLIERS
C.....(BOTKIN ET AL. 1972. J. ECOL. 60:849-872)
C.....
      DEGDGF(I)=4.0*(DEGD-DMIN(I))*(DMAX(I)-DEGD)/
     &(DMAX(I)-DMIN(I))**2
      IF(DEGDGF(I).LT.0.) DEGDGF(I)=0.
      IF(DEGDGF(I).EQ.0.) GO TO 40
C.....
C.....CALCULATE SPECIES SOIL MOISTURE MULTIPLIERS
C.....
      DROUT = D3(I)*TGS
      IF(DROUT.LT.FJ) DROUT=FJ
      SMGF(I)=SQRT((DROUT-FJ)/DROUT)
      IF(SMGF(I).EQ.0.) GO TO 40
```

APPENDIX A (CONTINUED)

```
C.....
C.....CALCULATE SPECIES SOIL NITROGEN GROWTH MULTIPLIER
C.....(MITCHELL AND CHANDLER. 1939. BLACK ROCK FOREST BULLETIN 11;
C.....ABER ET AL. 1979.CAN.J.FOR.RES. 9:10-14).
C.....CONN - %N IN GREEN LEAVES
C.....
      CONN=CM1(I)*(1.-10.**((-1.*CM3(I))*(AVLMC+CM2(I))))
      SNGF(I)=CM4(I)+CM5(I)*CONN
      IF(SNGF(I).LT.0.) SNGF(I)=0.
   40 CONTINUE
      RETURN
      END
```

APPENDIX A (CONTINUED)

```
C
C                        SUBROUTINE GROW
C
C     SUBROUTINE GROW CALCULATES DIAMETER GROWTH FOR EACH TREE
C     BY DECREASING MAXIMAL GROWTH TO THE EXTENT THAT THE MOST
C     LIMITING RESOURCE IS LESS THAN OPTIMAL.
C
      SUBROUTINE GROW(KYR)
      COMMON/WATER/T(12),VT(12),RT(12),R(12),VR(12),FC,DRY,BGS,EGS,PLAT,
     1FJ,AET
      COMMON/FOREST/NTREES(100),DBH(1500),IAGE(1500),KSPRT(100),
     > NEWTR(100),SUMLA(700),NEW(100),SWTCH(5)
      COMMON/PARAM/AAA(100,6),DMAX(100),DMIN(100),B3(100),B2(100),
     > ITOL(100),AGEMX(100),G(100),SPRTND(100),SPRTMN(100),
     1SPRTMX(100),SWITCH(100,5),MPLANT(100),D3(100),FROST(100),
     2TL(100),CM1(100),CM2(100),CM3(100),CM4(100),CM5(100),
     3FWT(100),SLTA(100),SLTB(100),RTST(100),FRT(100)
      COMMON/CONST/NSPEC,DEGD
      COMMON/DEAD/NOGRO(1500),NTEMP(1500)
      COMMON/PROD/AWP(1500)
      COMMON/COUNT/NTOT,NYEAR,KPRNT,NMAX,KLAST,NWRITE,KWRITE
      COMMON/TEMP/DTEMP(1500),ITEMP(1500)
      COMMON/GMLT/SMGF(100),SNGF(100),DEGDGF(100)
      LOGICAL SWITCH,SWTCH
C.....
C.....INITIALIZE WOOD PRODUCTION
C.....
      DO 6 I=1,1500
      AWP(I) = 0.0
    6 CONTINUE
C.....
C.....CALCULATE TOTAL NUMBER OF TREES
C.....
      NTOT = 0
      DO 10 I=1,NSPEC
   10    NTOT = NTOT+NTREES(I)
      IF (NTOT.EQ.0) RETURN
      IF(NTOT.GT.1500) CALL ERR8
C.....
C.....INITIALIZE CANOPY LEAF BIOMASS PROFILE
C.....
      DO 20 I=1,700
   20    SUMLA(I) = 0.
C.....
C.....LOOP FOR CALCULATING CANOPY PROFILE
C.....
      NL = 1
      DO 40 J=1,NSPEC
         IF (NTREES(J).EQ.0) GO TO 40
         NU = NL+NTREES(J) -1
```

APPENDIX A (CONTINUED)

```
          RET=FRT(J)
          DO 30 K=NL,NU
          AGE=IAGE(K)
          IF(AGE.LT.RET) RET=AGE
C.....
C.....
C.....HEIGHT PROFILE IS CALCULATED IN .1 METER UNITS
C.....(BOTKIN ET AL. 1972. J. ECOL. 60:849-872)
C.....
             IHT = (B2(J)*DBH(K)-B3(J)*DBH(K)**2)/10.+1.
             IF (IHT.GT.700) CALL ERR9
C.....
C.....CALCULATE AND SUM LEAF BIOMASS FOR TREES OF APPROXIMATELY
C.....THE SAME HEIGHT (ABER ET AL. 1982. FOREST SCI. 28:31-45)
C.....
             SUMLA(IHT) = SUMLA(IHT)+(((SLTA(J)+SLTB(J)*DBH(K))/2.)
     &                       **2*3.14*FWT(J)*RET)
   30        CONTINUE
          NL = NL+NTREES(J)
   40     CONTINUE
C.....
C.....CALCULATE CUMULATIVE LEAF BIOMASS DOWN THROUGH THE CANOPY
C.....
       DO 50 J=1,699
          J1 = 700-J
          SUMLA(J1) = SUMLA(J1)+SUMLA(J1+1)
   50     CONTINUE
C.....
C.....MAIN LOOP FOR CALCULATING DIAMETER INCREMENT
C.....
       NL = 1
       DO 80 I=1,NSPEC
          IF (NTREES(I).EQ.0) GO TO 80
          NU = NL+NTREES(I)-1
          DO 70 J=NL,NU
C.....
C.....CALCULATE LEAF BIOMASS OF ALL TALLER TREES (SLAR)
C.....
             HT = B2(I)*DBH(J)-B3(I)*DBH(J)**2
             IHT = HT/10.+2.
             SLAR = SUMLA(IHT)
C.....
C.....CALCULATE AVAILABLE LIGHT TO THIS TREE (% FULL SUNLIGHT)
C.....(ABER ET AL. 1982. FOREST SCI. 28: 31-45;
C.....PASTOR AND MCCLAUGHERTY UNPUBL.)
C.....
             AL = 1.0*EXP(-SLAR/93750.)
C.....
C.....CALCULATE AVAILABLE LIGHT MULTIPLIER IF TREE IS SHADE INTOLERANT
```

APPENDIX A (CONTINUED)

```
C.....(SHUGART AND WEST. 1977. J. ENV. MGMT. 5:161-179)
C.....
      IF(ITOL(I).LT.2) GO TO 58
      ALGF=2.24*(1.0-EXP(-1.136*(AL-.08)))
      GO TO 59
C.....
C.....CALCULATE AVAILABLE LIGHT MULTIPLIER IF TREE IS SHADE TOLERANT
C.....(SHUGART AND WEST. 1977)
C.....
  58  ALGF=1.0-EXP(-4.64*(AL-.05))
  59  IF(ALGF.LT.0.) ALGF=0.
C.....
C.....CALCULATE MAXIMUM TREE VOLUME
C.....(BOTKIN ET AL. 1972. J. ECOL. 60:849-872)
C.....
          GR = (137.+.25*B2(I)**2/B3(I))*(0.5*B2(I)/B3(I))
C.....
C.....CALCULATE DIAMETER INCREMENT UNDER OPTIMAL CONDITIONS
C.....
        DNCMAX = G(I)*DBH(J)*(1.0-(137.*DBH(J)+B2(I)*DBH(J)**2-B3(I) *
     >      DBH(J)**3)/GR)/(274.+3.0*B2(I)*DBH(J)-4.0*B3(I)*DBH(J)**2)
C.....
C.....CHOOSE SMALLEST GROWTH MULTIPLIER FOR THIS TREE
C.....(LIEBIG'S LAW OF THE MINIMUM)
C.....
      GF=AMIN1(ALGF,SMGF(I),SNGF(I),DEGDGF(I))
C.....
C.....REDUCE DIAMETER INCREMENT TO THE EXTENT THAT CONDITIONS ARE
C.....LESS THAN OPTIMUM FOR GROWTH
C.....
      DINC=DNCMAX*GF
C.....
C.....CHECK INCREMENT LESS THAN MINIMUM REQUIRED FOR GROWTH.
C.....IF DINC LESS THAN 1.0 MM OR 10% OF DNCMAX, OR IF
C.....JANUARY TEMPERATURE LESS THAN FROST TOLERANCE, FLAG TREE
C.....IN NOGRO
C.....
      IF(DINC.LT..1.OR.FROST(I).GT.RT(1)) DINC=0.
      IF(DINC .GE. .10*DNCMAX) NOGRO(J) = 0
      IF(DINC .LT. .10*DNCMAX) NOGRO(J) =NOGRO(J)  -1
C.....
C.....CALCULATE WOODY BIOMASS (KG) BEFORE INCREMENTING DIAMETER
C.....(SOLLINS ET AL. 1973. EDFB-IBP-73-2)
C.....
      AB1 = .1193*DBH(J)**2.393
C.....
C.....INCREMENT DIAMETER
```

APPENDIX A (CONTINUED)

```
C.....
   60       DBH(J) = DBH(J)+DINC
C.....
C.....CALCULATE WOODY BIOMASS AFTER INCREMENTING DIAMETER
C.....
      AB2 = .1193*DBH(J)**2.393
C.....
C.....CALCULATE NET INCREASE IN WOODY BIOMASS (ABOVEGROUND
C.....WOODY PRODUCTION IN KG)
C.....
      AWP(J) = AB2-AB1
   70       CONTINUE
         NL = NL+NTREES(I)
   80    CONTINUE
      RETURN
      END
```

APPENDIX A (CONTINUED)

```
C
C                        SUBROUTINE INPUT
C
C
C      INPUT READS RUN PARAMETERS, LATITUDE, LONGITUDE, DAYS OF THE YEAR
C      THE GROWING SEASON BEGINS AND ENDS, SOIL FIELD MOISTURE CAPACITY
C      AND WILTING POINTS, MONTHLY TEMPERATURE, PRECIPITATION, AND THEIR
C      STND DEV, SPECIES PARAMETERS, DECOMPOSITION PARAMETERS, AND
C      STARTING HUMUS WEIGHT AND N CONTENT
C
      SUBROUTINE INPUT
      COMMON/INTERP/IPOLAT,X(10)
      COMMON/WATER/T(12),VT(12),RT(12),R(12),VR(12),FC,DRY,BGS,EGS,PLAT,
     1FJ,AET
      COMMON/PARAM/AAA(100,6),DMAX(100),DMIN(100),B3(100),B2(100),
     > ITOL(100),AGEMX(100),G(100),SPRTND(100),SPRTMN(100),
     1SPRTMX(100),SWITCH(100,5),MPLANT(100),D3(100),FROST(100),
     2TL(100),CM1(100),CM2(100),CM3(100),CM4(100),CM5(100),
     3FWT(100),SLTA(100),SLTB(100),RTST(100),FRT(100)
      COMMON/COUNT/NTOT,NYEAR,KPRNT,NMAX,KLAST,NWRITE,KWRITE
      COMMON/CONST/NSPEC,DEGD
      COMMON/LINEAR/TSAV(45,12),VTSAV(45,12),RSAV(45,12),VRSAV(45,12)
      COMMON/DCMP/AVAILN,TYL(20),C(100,15),FDAT(20,10),FF(20,3),
     1 NCOHRT,HCN,BASESC,BASESN,SCO2,TYLN
C.....
C.....READ RUN PARAMETERS
C.....
C.....KPRNT - PRINT INTERVAL
C.....KLAST - NUMBER OF PLOTS SIMULATED
C.....NYEAR - NUMBER OF YEARS SIMULATED
C.....NMAX - NUMBER OF TIMES OUTPUT IS CALLED PER PLOT
C.....NWRITE - NUMBER OF TIMES OUTPUT IS CALLED PER RUN
C.....KWRITE - COUNTS NUMBER OF TIMES OUTPUT IS CALLED.
C.....         WHEN KWRITE=NWRITE, MEANS AND CONFIDENCE INTERVALS
C.....         OF SELECTED VARIABLES ARE CALCULATED IN OUTPUT.
C.....
      READ(5,1005) KPRNT,KLAST,NYEAR
 1005 FORMAT(6X,I3,7X,I3,7X,I5)
      IF(KLAST.GT.100) CALL ERR1
      NMAX=NYEAR/KPRNT + 1
      IF(NMAX.GT.70) CALL ERR2
      NWRITE=NMAX*KLAST
      KWRITE=0
C.....
C.....IPOLAT - NUMBER OF BREAK POINTS IN LINEAR INTERPOLATIONS
C.....         (EQUALS NUMBER OF ENTRIES IN ARRAY X)
C.....
      READ(5,1010) IPOLAT
 1010 FORMAT(7X,I2)
```

APPENDIX A (CONTINUED)

```
C.....
C.....ARRAY X CONTAINS YEARS IN WHICH CLIMATE CHANGES AND BETWEEN
C.....WHICH LINEAR INTERPOLATIONS MUST BE MADE. THE FIRST ENTRY
C.....MUST BE EQUAL TO ZERO AND THE LAST EQUAL TO NYEAR.
C.....
      READ(5,1015) (X(I),I=1,10)
 1015 FORMAT(10F7.0)
C.....
C.....READ LATITUDE, LONGITUDE, DAYS GROWING SEASON BEGINS AND ENDS,
C.....SOIL FIELD MOISTURE CAPACITY AND WILTING POINT
C.....
      READ(5,1020) PLAT,PLONG,BGS,EGS,FC,DRY
      TGS = EGS-BGS+1
 1020 FORMAT(5X,F5.2,7X,F5.1,5X,F4.0,5X,F4.0,4X,F4.1,5X,F4.1)
C.....
C.....READ MONTHLY TEMPERATURE, STND DEV, PRECIPITATION, STND DEV
C.....
      READ(5,1035) ((TSAV(J,K),K=1,12),J=1,IPOLAT)
      READ(5,1035) ((VTSAV(J,K),K=1,12),J=1,IPOLAT)
      READ(5,1035) ((RSAV(J,K),K=1,12),J=1,IPOLAT)
      READ(5,1035) ((VRSAV(J,K),K=1,12),J=1,IPOLAT)
 1035 FORMAT(8X,12F6.0)
C.....
C.....WRITE CLIMATE DATA TO PRINTER
C.....
      WRITE(6,1025) PLAT,PLONG,BGS,EGS
 1025 FORMAT(' LATITUDE=',F5.1,'  LONGITUDE=',F5.1,
     1'  GROWING SEASON: BEGINS DAY ',F5.1,
     2'  ENDS DAY ',F5.1)
      WRITE(6,7036)
 7036 FORMAT('  '/13X,'J',5X,'F',5X,'M',5X,'A',5X,'M',5X,'J',5X,'J',5X,
     1'A',5X,'S',5X,'O',5X,'N',5X,'D')
      WRITE(6,7037) (TSAV(1,K),K=1,12)
 7037 FORMAT(' TEMP (C)',12F6.1)
      WRITE(6,7038) (VTSAV(1,K),K=1,12)
 7038 FORMAT(' STND DEV',12F6.1)
      WRITE(6,7039) (RSAV(1,K),K=1,12)
 7039 FORMAT(' PPT (CM)',12F6.1)
      WRITE(6,7040) (VRSAV(1,K),K=1,12)
 7040 FORMAT(' STND DEV',12F6.1/)
C.....
C.....READ NUMBER OF SPECIES (NSPEC)
C.....
      READ(5,9000) NSPEC
      IF(NSPEC.GT.100) CALL ERR3
C.....
C.....INPUT INDIVIDUAL SPECIES INFORMATION
C.....AAA - SPECIES NAME
```

APPENDIX A (CONTINUED)

```
C.....DMAX - MAXIMUM GROWING DEGREE DAYS
C.....DMIN - MINIMUM GROWING DEGREE DAYS
C.....B3 - INDIVIDUAL SPECIES CONSTANT USED IN GROW
C.....B2 - INDIVIDUAL SPECIES CONSTANT USED IN GROW
C.....ITOL - LIGHT TOLERANCE CLASS
C.....AGEMX - MAXIMUM AGE OF SPECIES
C.....G - SCALES THE GROWTH RATE OF EACH SPECIES
C.....SPRTND - TENDENCY TO STUMP SPROUT
C.....SPRTMN - MINIMUM SIZE TREE THAT WILL SPROUT
C.....SPRTMX - MAXIMUM SIZE TREE THAT WILL SPROUT
C.....SWITCH - REPRODUCTION SWITCHES USED IN BIRTH
C.....MPLANT - MAXIMUM NUMBER OF SEEDLINGS TO PLANT
C.....NUM - SPECIES IDENTIFICATION NUMBER
C.....D3 - PROPORTION OF GROWING SEASON SPECIES CAN WITHSTAND DROUGHT
C.....FROST - MINIMUM JANUARY TEMPERATURE SPECIES CAN WITHSTAND
C.....TL - LEAF LITTER TYPE
C.....CM1 THROUGH CM5 - PARAMETERS TO CALCULATE NITROGEN GROWTH FACTORS
C.....FWT - LEAF WEIGHT/UNIT CROWN AREA
C.....SLTA,SLTB - PARAMETERS TO CALCULATE CROWN AREA
C.....RTST - ROOT/SHOOT RATIO
C.....FRT - FOLIAGE RETENTION TIME IN YEARS
C.....
      WRITE(6,4000)
 4000 FORMAT('  AAA',22X,'DMAX',2X,'DMIN',4X,'B3',4X,'B2',2X,'ITOL',
     & 1X,'AGEMX',3X,'G',2X,'SPRTND',1X,'SPRTMN',1X,'SPRTMX',1X,
     & 'SWITCH',1X,'MPLANT',1X,'NUM'/'   D3',1X,'FROST',1X,'TL',2X,
     & 'CM1',4X,'CM2',4X,'CM3',4X,'CM4',1X,'CM5',2X,'FWT',2X,'SLTA',
     & 2X,'SLTB',1X,'RTST',1X,'FRT'/)
      DO 10 J=1,NSPEC
         READ(5,9001) (AAA(J,I),I=1,6),DMAX(J),DMIN(J),B3(J),B2(J),
     >    ITOL(J),AGEMX(J),G(J),SPRTND(J),SPRTMN(J),SPRTMX(J),
     >   (SWITCH(J,I),I=1,5),MPLANT(J),NUM,D3(J),FROST(J),
     >   TL(J),CM1(J),CM2(J),CM3(J),CM4(J),CM5(J),FWT(J),SLTA(J),
     >   SLTB(J),RTST(J),FRT(J)
C.....
C.....RESCALE NITROGEN GROWTH MULTIPLIER PARAMETERS SO THAT
C.....GROWTH IS NOT N LIMITED WHEN N AVAILABILITIES ARE GREATER THAN
C.....SATURATED LEVELS FOR EACH TYPE OF RESPONSE
C.....
         IF(CM4(J).EQ.-5.0) CM4(J)=CM4(J)/3.0
         IF(CM5(J).EQ.2.9) CM5(J)=CM5(J)/3.0
         IF(CM4(J).EQ.-1.2) CM4(J)=CM4(J)/2.4
         IF(CM5(J).EQ.1.3) CM5(J)=CM5(J)/2.4
         IF(CM4(J).EQ.-0.6) CM4(J)=CM4(J)/1.75
         IF(CM5(J).EQ.1.0) CM5(J)=CM5(J)/1.75
C.....
C.....WRITE SPECIES PARAMETERS TO PRINTER
C.....
```

APPENDIX A (CONTINUED)

```
      WRITE(6,9002) (AAA(J,I),I=1,6),DMAX(J),DMIN(J),B3(J),B2(J),
     >  ITOL(J),AGEMX(J),G(J),SPRTND(J),SPRTMN(J),SPRTMX(J),
     > (SWITCH(J,I),I=1,5),MPLANT(J),NUM,D3(J),FROST(J),
     > TL(J),CM1(J),CM2(J),CM3(J),CM4(J),CM5(J),FWT(J),SLTA(J),
     >  SLTB(J),RTST(J),FRT(J)
   10 CONTINUE
C.....
C.....INPUT FOREST FLOOR DECOMPOSITION PARAMETERS
C.....NLVAR - # OF VARIABLES USED TO CALCULATE DECOMPOSITION
C.....NLT - # OF LITTER TYPES
C.....
      READ(5,9003) NLVAR,NLT
 9003 FORMAT(BX,I2,7X,I2)
      DO 15 I=1,NLT
      READ(5,9004) (FDAT(I,J),J=1,NLVAR)
 9004 FORMAT(F3.0,3F6.4,F4.0,F3.0,F5.3,F7.4,F5.3,F4.2)
   15 CONTINUE
C.....
C.....NCOHRT -  NUMBER OF LITTER COHORTS INITIALLY PRESENT
C.....IF ONLY HUMUS IS PRESENT, NCOHRT = 1
C.....
      READ(5,9005) NCOHRT
 9005 FORMAT(9X,I1)
      IF(NCOHRT.GT.100) CALL ERR4
C.....
C.....BASESC - STARTING HUMUS WEIGHT (T/HA)
C.....BASESN - STARTING HUMUS N CONTENT (T/HA)
C.....
      READ(5,9006) BASESC,BASESN
 9006 FORMAT(F3.0,F6.4)
C.....
C.....WRITE INITIAL SOIL CONDITIONS TO PRINTER
C.....
      WRITE(6,9007) FC,DRY
 9007 FORMAT('  '/' FIELD CAPACITY (CM)=',F5.1,' WILTING POINT (CM)=',
     &F5.1)
      WRITE(6,9008) BASESC,BASESN
 9008 FORMAT(' INITIAL SOIL O.M.=',F4.1,' INITIAL SOIL N=',F5.2)
      RETURN
 9000 FORMAT(6X,I3)
 9001 FORMAT(6A4,F6.0,F5.0,F4.4,F5.2,I1,F6.2,F5.1,F2.0,F4.1,F4.0,
     1 5L1,I4,I5/F5.3,F5.0,F3.0,F5.2,F7.2,F7.5,F5.1,F4.1,F5.0,
     2 2F5.3,F4.1,F3.0)
 9002 FORMAT(' ',6A4,F6.0,F6.0,F7.4,F6.2,I5,F6.0,F7.2,F5.0,F6.1,F7.0,3X,
     1  5L1,I4,I6/' ',F5.3,F5.0,F4.0,F5.2,F7.2,F8.5,F5.1,F4.1,F5.0,
     2  2F6.3,F4.1,F5.0/)
      END
```

APPENDIX A (CONTINUED)

```
C
C                        SUBROUTINE KILL
C
C
C     SUBROUTINE KILL KILLS TREES BY AGE DEPENDENT MORTALITY (ONLY 1%
C     REACH MAXIMUM AGE) AND AGE INDEPENDENT MORTALITY (PROBABILITY OF
C     SURVIVING 10 CONSECUTIVE YEARS OF SLOW GROWTH (SEE GROW) = 1%).
C     DECISIONS ON WHETHER OR NOT TO KILL A TREE ARE PARTLY BASED ON
C     RANDOM NUMBERS SUPPLIED BY URAND.
C     KILL ALSO CALCULATES LITTER AMOUNTS, WHICH ARE DECAYED IN
C     SUBROUTINE DECOMP.
C
      SUBROUTINE KILL(KYR)
      COMMON/FOREST/NTREES(100),DBH(1500),IAGE(1500),KSPRT(100),
     > NEWTR(100),SUMLA(700),NEW(100),SWTCH(5)
      COMMON/PARAM/AAA(100,6),DMAX(100),DMIN(100),B3(100),B2(100),
     > ITOL(100),AGEMX(100),G(100),SPRTND(100),SPRTMN(100),
     1SPRTMX(100),SWITCH(100,5),MPLANT(100),D3(100),FROST(100),
     2TL(100),CM1(100),CM2(100),CM3(100),CM4(100),CM5(100),
     3FWT(100),SLTA(100),SLTB(100),RTST(100),FRT(100)
      COMMON/CONST/NSPEC,DEGD
      COMMON/DEAD/NOGRO(1500),NTEMP(1500)
      COMMON/PROD/AWP(1500)
      COMMON/COUNT/NTOT,NYEAR,KPRNT,NMAX,KLAST,NWRITE,KWRITE
      COMMON/TEMP/DTEMP(1500),ITEMP(1500)
      COMMON/SEED/USEED(15)
      COMMON/DCMP/AVAILN,TYL(20),C(100,15),FDAT(20,10),FF(20,3),
     1NCOHRT,HCN,BASESC,BASESN,SCO2,TYLN
      INTEGER USEED
      LOGICAL SWITCH,SWTCH
      KNT = 0
C.....
C......INITIALIZE LITTER
C.....
       DO 5 L=1,20
        TYL(L)=0.0
   5   CONTINUE
C.....
C.....INITIALIZE PLOT BASAL AREA
C.....
       BA=0.0
C.....
C.....BEGIN MAIN KILLING LOOP
C....
      DO 30 I=1,NSPEC
         IF (NTREES(I).EQ.0) GO TO 30
         NL = KNT+1
         NU = NTREES(I)+KNT
         DO 20 K=NL,NU
```

APPENDIX A (CONTINUED)

```
C.....
C.....CALCULATE LEAF PRODUCTION (T/HA)
C.....(ABER ET AL. 1982. FOREST SCI. 28:31-45)
C.....
      FOLW=((SLTA(I)+SLTB(I)*DBH(K))/2.)**2*3.14*FWT(I)*.000012
C.....
C.....CALCULATE BASAL AREA
C.....
      BA=BA+.0314*(DBH(K)*0.5)**2
C.....
C.....KILL TREES BASED ON PROBABILITY THAT ONLY 1% REACH MAXIMUM AGE
C.....
      YFL=URAND(USEED(1))
          IF (YFL.LE.(4.605/AGEMX(I))) GO TO 10
C.....
C.....CHECK TO SEE IF THERE WAS ANY GROWTH FOR TREE
C.....IF NOT, INCREASE PROBABILITY OF DIEING SO THAT THE TREE HAS
C.....A 1% CHANCE OF SURVIVING 10 CONSECUTIVE YEARS OF SLOW GROWTH
C.....
          IF (NOGRO(K).GT. -2) GO TO 19
          YFL=URAND(USEED(2))
          IF (YFL.GT.0.368) GO TO 19
   10     CONTINUE
          NTREES(I) = NTREES(I)-1
C.....
C.....CHECK TO SEE IF DEAD TREE CAN STUMP SPROUT. INCREMENT KSPRT
C.....IF TREE CAN SPROUT
C.....
          IF (DBH(K).GT.SPRTMN(I).AND.DBH(K).LT.SPRTMX(I)) KSPRT(I) =
     >     KSPRT(I)+1
C.....
C.....CALCULATE WOODY LITTER IN T/HA (SOLLINS ET AL. 1973.
C.....EDFB-IBP-73-2)
C.....
      BD=.60
      IF(DBH(K).LE.10.) TYL(14)=TYL(14)+BD*(.00143*DBH(K)**2.393)
      IF(DBH(K).GT.10.) TYL(15)=TYL(15)+BD*(.00143*DBH(K)**2.393)
C.....
C.....FLAG DEAD TREES
C.....
          DBH(K) = -1.0
C.....
C.....CALCULATE LEAF LITTER BY QUALITY CLASS IN T/HA
C.....IF THE TREE IS SLOW GROWING BUT DIDN'T DIE, LEAF LITTER
C.....IS HALVED (BRAY AND GORHAM.1964.ADVANCES IN ECOLOGICAL
C.....RESEARCH 2:101-157).
C.....IF THE TREE DIED, TOTAL LEAF BIOMASS IS RETURNED TO THE SOIL.
C.....
```

APPENDIX A (CONTINUED)

```
  19    L=TL(I)
        IF(NOGRO(K).EQ.-2.AND.DBH(K).GT.-1.) FOLW=FOLW*0.5
        IF(DBH(K).LT.0.) FOLW=FOLW*FRT(I)
        TYL(L)=TYL(L)+FOLW
C.....
C.....CALCULATE ROOT LITTER (T/HA)
C.....
        TYL(13)=TYL(13)+1.3*FOLW*RTST(I)
   20       CONTINUE
          KNT = NU
   30     CONTINUE
C.....
C.....CALCULATE TOTAL LEAF LITTER (T/HA)
C.....
      DO 35 L=1,12
      TYL(17)=TYL(17) + TYL(L)
  35  CONTINUE
C.....
C.....CALCULATE TWIG LITTER IN T/HA (CHRISTENSEN.1977.OIKOS 28:177-186)
C.....
      TYL(16)=BA/333.
C.....
C.....CALCULATE TOTAL LITTER (T/HA)
C.....
      TYL(18)=TYL(13)+TYL(14)+TYL(15)+TYL(16)+TYL(17)
C.....
C.....REWRITE DIAMETERS AND AGES TO ELIMINATE DEAD TREES
C.....
      K = 0
      DO 40 I=1,1500
         IF (DBH(I).EQ.0.) GO TO 50
         IF (DBH(I).LT.0.) GO TO 40
         K = K+1
         DBH(K) = DBH(I)
         IAGE(K) = IAGE(I)
         NOGRO(K) = NOGRO(I)
   40    CONTINUE
   50 NTOT = K
      IF (NTOT.EQ.0) RETURN
      NTOT1 = K+1
      IF(NTOT1.GT.1500) CALL ERR5
C.....
C.....ELIMINATE DEAD TREES
C.....
      DO 60 I=NTOT1,NU
         DBH(I) = 0.
         IAGE(I) = 0
         NOGRO(I) = 0
   60    CONTINUE
      RETURN
      END
```

APPENDIX A (CONTINUED)

```
C
C                        SUBROUTINE LININT
C
C
C     SUBROUTINE LININT INTERPOLATES MONTHLY TEMPERATURES, PRECIPITATION
C     AND THEIR STND DEV FOR ALL YEARS BRACKETED BY TWO YEARS OF
C     DIFFERENT CLIMATES. THESE YEARS ARE SUPPLIED IN ARRAY X.
C
      SUBROUTINE LININT(P1,P2,XX,NTYPE)
      DIMENSION P1(12),P2(12)
      COMMON/INTERP/IPOLAT,X(10)
      COMMON /LINEAR/TSAV(45,12),VTSAV(45,12),RSAV(45,12),VRSAV(45,12)
      NPTS = IPOLAT
      NPT1 = NPTS-1
C.....
C.....FIND YEARS BETWEEN WHICH LINEAR INTERPOLATIONS SHOULD BE
C.....MADE. XX - CURRENT YEAR. X(I) AND X(I+1) - BRACKETING YEARS
C.....AS SPECIFIED IN ARRAY X
C.....
      DO 250 I=1,NPT1
      IF(XX .GT. X(I) .AND. XX .LE. X(I+1)) GO TO 300
  250 CONTINUE
  300 CONTINUE
           DO 500 K=1,12
C.....
C.....IF TEMPE CALLS LININT, NTYPE = 1
C.....IF MOIST CALLS LININT, NTYPE = 2
C.....
      IF(NTYPE .EQ. 2) GO TO 400
C.....
C.....INTERPOLATE MEAN MONTHLY TEMPERATURES (C) BETWEEN YEARS
C.....OF DIFFERENT CLIMATES
C.....
      P1(K) = TSAV(I,K)+((TSAV(I+1,K)-TSAV(I,K))/
     1(X(I+1)-X(I)))*(XX-X(I))
C.....
C.....INTERPOLATE STND DEVS OF MONTHLY TEMPERATURES
C.....
      P2(K) = VTSAV(I,K)+((VTSAV(I+1,K)-VTSAV(I,K))/
     1(X(I+1)-X(I)))*(XX-X(I))
      GO TO 450
C.....
C.....INTERPOLATE MEAN MONTHLY RAINFALL (CM) BETWEEN YEARS
C.....OF DIFFERENT CLIMATES
C.....
  400 P1(K) = RSAV(I,K)+((RSAV(I+1,K)-RSAV(I,K))/
     1(X(I+1)-X(I)))*(XX-X(I))
```

APPENDIX A (CONTINUED)

```
C.....
C.....INTERPOLATE STND DEVS OF MONTHLY RAINFALL
C.....
      P2(K) = VRSAV(I,K)+((VRSAV(I+1,K)-VRSAV(I,K))/
     1(X(I+1)-X(I)))*(XX-X(I))
  450 CONTINUE
  500 CONTINUE
      RETURN
      END
```

APPENDIX A (CONTINUED)

```
C
C                         SUBROUTINE MOIST
C
C
C     SUBROUTINE MOIST CALCULATES THE FRACTION OF THE
C     GROWING SEASON WITH UNFAVORABLE SOIL MOISTURE FOR GROWTH
C     (FJ) USED IN SUBROUTINE GMULT TO DETERMINE SOIL MOISTURE
C     GROWTH MULTIPLIERS, AND ACTUAL EVAPOTRANSPIRATION (AET)
C     USED IN SUBROUTINE DECOMP TO DETERMINE DECAY RATES.
C     THE SUBROUTINE SIMULATES THE METHOD OF THORNTHWAITE AND MATHER
C     (1957) AS MODIFIED BY PASTOR AND POST (1984).
C     TEMPERATURES ARE PROVIDED BY SUBROUTINE TEMPE. MONTHLY
C     PRECIPITATION IS CALCULATED THE SAME WAY AS TEMPERATURES WERE IN
C     TEMPE.
C
C     DATA THAT IS REQUIRED AND READ BY SUBROUTINE INPUT:
C        T = AVERAGE MONTHLY TEMPERATURES (JAN-DEC)  CENTIGRADE
C        R = AVERAGE MONTHLY RAINFALL     (JAN-DEC)  CENTIMETERS
C        VR = STANDARD DEVIATION OF AVERAGE MONTHLY RAINFALL
C     FC = CENTIMETERS OF WATER THE SOIL CAN HOLD AT FIELD CAPACITY
C     DRY = CENTIMETERS OF WATER BELOW WHICH TREE GROWTH STOPS
C           (-15 BARS)
C     BGS = YEAR DAY ON WHICH THE GROWING SEASON BEGINS
C     EGS = YEAR DAY ON WHICH THE GROWING SEASON ENDS
C     PLAT = LATITUDE OF PLOT (DEGREES NORTH)
C
      SUBROUTINE MOIST(KYR)
      COMMON/WATER/T(12),VT(12),RT(12),R(12),VR(12),FC,DRY,BGS,EGS,PLAT,
     1FJ,AET
      COMMON/COUNT/NTOT,NYEAR,KPRNT,NMAX,KLAST,NWRITE,KWRITE
      COMMON/CONST/NSPEC,DEGD
      COMMON/SEED/USEED(15)
      DIMENSION Z(2),CLAT(12,26),DLAT(12,6)
      DIMENSION DAYS(12)
      EQUIVALENCE (CLAT(1,21),DLAT(1,1))
      INTEGER USEED
C.....
C.....MONTHLY CORRECTION FACTORS FOR 25-50 DEGREES LATITUDE NORTH
C.....DAYS(K) = NUMBER OF DAYS BETWEEN MID-MONTH K-1 AND K
C.....
      DATA DLAT/.80,.81,1.02,1.13,1.28,1.29,1.31,1.21,1.04,.94,.79,.75,
     6       .79,.81,1.02,1.13,1.29,1.31,1.32,1.22,1.04,.94,.79,.74,
     7       .77,.80,1.02,1.14,1.30,1.32,1.32,1.22,1.04,.93,.78,.73,
     8       .76,.80,1.02,1.14,1.31,1.33,1.34,1.23,1.05,.93,.77,.72,
     9       .75,.79,1.02,1.14,1.32,1.34,1.35,1.24,1.05,.93,.76,.71,
     *       .74,.78,1.02,1.15,1.33,1.36,1.37,1.25,1.06,.92,.76,.70/
      DATA CLAT/.93,.89,1.03,1.06,1.15,1.14,1.17,1.12,1.02,.99,.91,.91,
     6       .92,.88,1.03,1.06,1.15,1.15,1.17,1.12,1.02,.99,.91,.91,
     7       .92,.88,1.03,1.07,1.16,1.15,1.18,1.13,1.02,.99,.90,.90,
     8       .91,.88,1.03,1.07,1.16,1.16,1.18,1.13,1.02,. 8,.90,. 0,
     9       .91,.87,1.03,1.07,1.17,1.16,1.19,1.13,1.03,.98,.90,.89,
```

APPENDIX A (CONTINUED)

```
     *        .90,.87,1.03,1.08,1.18,1.17,1.20,1.14,1.03,.98,.89,.88,
     1        .90,.87,1.03,1.08,1.18,1.18,1.20,1.14,1.03,.98,.89,.88,
     2        .89,.86,1.03,1.08,1.19,1.19,1.21,1.15,1.03,.98,.88,.87,
     3        .88,.86,1.03,1.09,1.19,1.20,1.22,1.15,1.03,.97,.88,.86,
     4        .88,.85,1.03,1.09,1.20,1.20,1.22,1.16,1.03,.97,.87,.86,
     5        .87,.85,1.03,1.09,1.21,1.21,1.23,1.16,1.03,.97,.86,.85,
     6        .87,.85,1.03,1.10,1.21,1.22,1.24,1.16,1.03,.97,.86,.84,
     7        .86,.84,1.03,1.10,1.22,1.23,1.25,1.17,1.03,.97,.85,.83,
     8        .85,.84,1.03,1.10,1.23,1.24,1.25,1.17,1.04,.96,.84,.83,
     9        .85,.84,1.03,1.11,1.23,1.24,1.26,1.18,1.04,.96,.84,.82,
     *        .84,.83,1.03,1.11,1.24,1.25,1.27,1.18,1.04,.96,.83,.81,
     1        .83,.83,1.03,1.11,1.25,1.26,1.27,1.19,1.04,.96,.82,.80,
     2        .82,.83,1.03,1.12,1.26,1.27,1.28,1.19,1.04,.95,.82,.79,
     3        .81,.82,1.02,1.12,1.26,1.28,1.29,1.20,1.04,.95,.81,.77,
     4 .81,.82,1.02,1.13,1.27,1.29,1.30,1.20,1.04,.95,.80,.76,72*0./
      DATA DAYS/31.,28.,31.,30.,31.,30.,31.,31.,30.,31.,30.,30./
      DATA NCT/0/
C.....
C.....ADJUST LATITUDE POINTER
C.....
      LAT=(PLAT+.5)-24
C.....
C.....INITIALIZE WATER CONTENT OF SOIL IN JANUARY TO FC
C.....
      XFC=10.*FC
      WATER=FC
C.....
C.....INITIALIZE THORNTHWAITE PARAMETERS
C.....TE = TEMPERATURE EFFICIENCY
C.....A = EXPONENT OF EVAPOTRANSPIRATION FUNCTION
C.....U = POTENTIAL EVAPOTRANSPIRATION
C.....AET = ACTUAL EVAPOTRANSPIRATION
C.....ACCPWL = ACCUMULATED POTENTIAL WATER LOSS
C.....
      AET=0.0
      ACCPWL=0.0
      TE=0.
      RSAVE = RT(1)
      DO 10 K=1,12
      IF(RT(K) .LT. 0.0)  RT(K) = 0.0
      TE=TE+(.2*RT(K))**1.514
10    CONTINUE
      A=.675*TE**3-77.1*TE**2+17920.0*TE+492390.0
      A=.000001*A
C.....
C.....INITIALIZE THE NUMBER OF DRY DAYS (DD),
C.....AND CURRENT DAY OF YEAR (CDAY)
C.....
      DD=0.0
      CDAY=15.0
```

APPENDIX A (CONTINUED)

```
C.....
C.....CALL LININT TO INTERPOLATE MONTHLY RAINFALL AND STND DEV
C.....BETWEEN YEARS OF DIFFERENT CLIMATE
C.....
      YR = KYR
      CALL LININT(R,VR,YR,2)
C.....
C.....MAIN LOOP FOR YEARLY WATER BALANCE CALCULATION BY MONTH
C.....
      DO 50 K=1,12
      OWATER=WATER
      NCT=NCT+1
      IF(NCT.EQ.2) GO TO 36
C.....
C.....CALL GGNORD TO PROVIDE NORMALLY DISTRIBUTED RANDOM NUMBER
C.....
      CALL GGNORD(USEED(14),USEED(15),Z)
      GO TO 38
   36 Z(1)=Z(2)
      NCT=0
C.....
C.....CALCULATE THIS MONTH'S RAINFALL (INTERPOLATED MEAN +/- NORMALLY
C.....DISTRIBUTED RANDOM NUMBER TIMES THE INTERPOLATED STND DEV)
C.....
   38 RAIN=R(K)+VR(K)*Z(1)
      IF(RAIN.LT.0.0) RAIN=0.0
      RAIN=AMAX1(0.0,RAIN)
      TTMP=RT(K)
      IF(TTMP.LT.0.0) TTMP=0.0
C.....
C.....CALCULATE POTENTIAL EVAPOTRANSPIRATION (U)
C.....(THORNTHWAITE AND MATHER.1957.PUBL. IN CLIMATOLOGY 10:83-311).
C.....
      U=1.6*((10.0*TTMP/TE)**A)*CLAT(K,LAT)
C.....
C.....CALCULATE POTENTIAL WATER LOSS THIS MONTH
C.....
      PWL=RAIN-U
C.....
C.....IF RAIN SATISFIES U THIS MONTH, DON'T DRAW ON SOIL WATER
C.....
      IF(PWL.GE.0.0) GO TO 55
C.....
C.....IF RAIN DOESN'T SATISFY U, ADD THIS MONTH'S POTENTIAL
C.....WATER LOSS TO ACCUMULATED POTENTIAL WATER LOSS FROM SOIL
C.....
      ACCPWL=ACCPWL + PWL
      XACPWL=ACCPWL*10.
```

APPENDIX A (CONTINUED)

```
C.....
C.....CALCULATE WATER RETAINED IN SOIL GIVEN SO MUCH ACCUMULATED
C.....POTENTIAL WATER LOSS
C.....(PASTOR AND POST.1984. CAN.J.FOR.RES. 14:466-467)
C.....
      WATER=FC*(EXP((.000461-1.10559/XFC)*(-1.*XACPWL)))
      IF(WATER.LT.0.0) WATER=0.0
C.....
C.....CSM - CHANGE IN SOIL MOISTURE DURING THIS MONTH
C.....
      CSM = WATER-OWATER
C.....
C.....CALCULATE ACTUAL EVAPOTRANSPIRATION (AET) IF SOIL WATER
C.....IS DRAWN DOWN THIS MONTH
C.....
      AET=AET+(RAIN-CSM)
      GO TO 56
   55 WATER = OWATER+PWL
      IF(WATER.GE.FC)WATER = FC
      CSM=WATER-OWATER
C.....
C.....IF SOIL IS PARTIALLY RECHARGED, REDUCE ACCUMULATED
C.....POTENTIAL WATER LOSS ACCORDINGLY
C.....
      ACCPWL=ACCPWL+CSM
C.....
C.....IF SOIL IS COMPLETELY RECHARGED, RESET ACCUMULATED
C.....POTENTIAL WATER LOSS TO ZERO
C.....
      IF(WATER.GE.FC)ACCPWL=0.
C.....
C.....IF SOIL WATER IS NOT DRAWN UPON, ADD U TO AET
C.....
      AET=AET+U
   56 CONTINUE
      OCDAY=CDAY
      CDAY=CDAY+DAYS(K)
      DDI=0.0
C.....
C.....INCREMENT THE NUMBER OF DRY DAYS, INTERPOLATING
C.....IF NECESSARY, TRUNCATE AT ENDS OF GROWING SEASON
C.....
      IF(CDAY .LE. BGS) GO TO 50
      IF(OCDAY .GE. EGS) GO TO 50
      IF(OWATER .GE. DRY .AND. WATER .GE. DRY) GO TO 50
      IF(OWATER .GT. DRY .AND. WATER .LT. DRY) GO TO 20
      IF(OWATER .LT. DRY .AND. WATER .GT. DRY) GO TO 30
```

APPENDIX A (CONTINUED)

```
      DDI=DAYS(K)
      IF(OCDAY .LT. BGS .AND. CDAY .GT. BGS) DDI=CDAY-BGS
      IF(OCDAY .LT. EGS .AND. CDAY .GT. EGS) DDI=EGS-OCDAY
      GO TO 40
20    DDI=DAYS(K)*(DRY-WATER)/(OWATER-WATER)
      IF(OCDAY .LT. BGS .AND. CDAY .GT. BGS) DDI=AMIN1(DDI,CDAY-BGS)
      IF(OCDAY .LT. EGS .AND. CDAY .GT. EGS) DDI=EGS-CDAY+DDI
      IF(DDI .LT. 0.0) DDI=0.0
      GO TO 40
30    DDI=DAYS(K)*(DRY-OWATER)/(WATER-OWATER)
      IF(OCDAY .LT. BGS .AND. CDAY .GT. BGS) DDI=OCDAY+DDI-BGS
      IF(DDI .LT. 0.0) DDI=0.0
      IF(OCDAY .LT. EGS .AND. CDAY .GT. EGS) DDI=AMIN1(DDI,EGS-OCDAY)
40    DD=DD+DDI
50    CONTINUE
C.....
C.....SAVE TOTAL NUMBER OF DRY DAYS FOR YEAR
C.....
      FJ=DD
      RT(1) = RSAVE
C.....
C.....CONVERT AET FROM CM TO MM
C.....
      AET=AET*10.
      RETURN
      END
```

APPENDIX A (CONTINUED)

```
C
C                        SUBROUTINE OUTPUT
C
C
C     SUBROUTINE OUTPUT CALCULATES AND STORES SPECIES BIOMASS, TOTAL
C     ABOVEGROUND BIOMASS AND NPP, TOTAL NUMBER OF STEMS, AND LEAF AREA.
C     IT ALSO STORES AVAILABLE N, SOIL C:N, SOIL O.M., LEAF LITTER,
C     TOTAL LITTER, AND AET.
C     MEANS AND 95% CONFIDENCE INTERVALS ARE CALCULATED ON ALL STAND
C     LEVEL VARIABLES AT THE END OF THE RUN.
C     ARRAY ST CONTAIN'S STUDENT'S T FOR N=1 TO GREATER THAN OR
C     EQUAL TO 30.
C
      SUBROUTINE OUTPUT(KYR,IPLOT)
      COMMON/WATER/T(12),VT(12),RT(12),R(12),VR(12),FC,DRY,BGS,EGS,PLAT,
     1FJ,AET
      COMMON/FOREST/NTREES(100),DBH(1500),IAGE(1500),KSPRT(100),
     > NEWTR(100),SUMLA(700),NEW(100),SWTCH(5)
      COMMON/PARAM/AAA(100,6),DMAX(100),DMIN(100),B3(100),B2(100),
     1 ITOL(100),AGEMX(100),G(100),SPRTND(100),SPRTMN(100),
     2 SPRTMX(100),SWITCH(100,5),MPLANT(100),D3(100),FROST(100),
     3 TL(100),CM1(100),CM2(100),CM3(100),CM4(100),CM5(100),
     4 FWT(100),SLTA(100),SLTB(100),RTST(100),FRT(100)
      COMMON/COUNT/NTOT,NYEAR,KPRNT,NMAX,KLAST,NWRITE,KWRITE
      COMMON/CONST/NSPEC,DEGD
      COMMON/PROD/AWP(1500)
      COMMON/DCMP/AVAILN,TYL(20),C(100,15),FDAT(20,10),FF(20,3),
     1NCOHRT,HCN,BASESC,BASESN,SCO2,TYLN
      DIMENSION BAR(100)
      DIMENSION TSTEM(70,100),TAB(70,100),FL(70,100),TOTL(70,100)
      DIMENSION TNAP(70,100),AVLN(70,100),CN(70,100),SCO2C(70,100)
      DIMENSION SOM(70,100),ET(70,100),XSTEM(70),XTAB(70),XFL(70)
      DIMENSION XTL(70),XNAP(70),XAVLN(70),XCN(70),XSCO2C(70)
      DIMENSION XSOM(70),XET(70),NYR(70),AVG(70,11)
      DIMENSION SSTEM(70),STAB(70),SFL(70),STL(70),SNAP(70)
      DIMENSION SAVLN(70),SCN(70),SSCO2C(70),SSOM(70),SET(70)
      DIMENSION CONF(70,11),ST(30)
      DATA ST/12.706,4.303,3.182,2.776,2.571,2.447,2.365,2.306,2.262,
     &2.228,2.201,2.179,2.160,2.145,2.131,2.120,2.110,2.101,2.093,
     &2.086,2.080,2.074,2.069,2.064,2.060,2.056,2.052,2.048,2.045,
     &2.042/
C.....
C.....INITIALIZATION
C.....AREA - LEAF AREA
C.....FOLW - LEAF BIOMASS
C.....AVAILN - AVAILABLE NITROGEN (FROM GMULT)
C.....TBAR - TOTAL ABOVEGROUND BIOMASS
C.....TAWP - TOTAL ABOVEGROUND WOODY PRODUCTION
C.....NTOT - NUMBER OF TREES
```

APPENDIX A (CONTINUED)

```
C.....
      KWRITE = KWRITE + 1
      KYR1 = KYR/KPRNT+1
         NTOT = NTOT +NTREES(I)
         IF(NTOT.GT.1500) CALL ERR7
   20    CONTINUE
C.....
C.....CONVERT NUMBER OF TREES PER PLOT TO NUMBER PER HA
C.....
       ATOT=NTOT
       ATOT=ATOT*12.
C.....
C.....CONVERT TOTAL ABOVEGROUND BIOMASS AND WOODY PRODUCTION
C.....TO T/HA.
C.....
      TBAR=TBAR*.012
      TAWP = TAWP*.012
C.....
C.....CALCULATE TOTAL ABOVEGROUND PRODUCTION
C.....
      TYNAP = TAWP+TYL(17)
C.....
C.....CONVERT SPECIES BIOMASS TO T/HA
C.....
      DO 30 IV1 = 1,NSPEC
         BAR(IV1) = BAR(IV1)*.012
   30    CONTINUE
C.....
C.....PLACE THIS YEAR'S RESULTS IN STORAGE ARRAYS FOR STATISTICAL
C.....CALCULATIONS
C.....TSTEM - NUMBER OF STEMS
C.....TAB - TOTAL ABOVEGROUND BIOMASS
C.....FL - LEAF LITTER
C.....TOTL - LEAF LITTER N
C.....TNAP - TOTAL NET ABOVEGROUND PRODUCTION
C.....AVLN - AVAILABLE NITROGEN
C.....CN - HUMUS C:N RATIO
C.....SCO2C - SOIL CO2 EVOLUTION
C.....SOM - SOIL ORGANIC MATTER
C.....ET - ACTUAL EVAPOTRANSPIRATION
C.....
      TSTEM(KYR1,IPLOT) = ATOT
      TAB(KYR1,IPLOT) = TBAR
      FL(KYR1,IPLOT) =TYL(17)
      TOTL(KYR1,IPLOT) = TYLN
      TNAP(KYR1,IPLOT) = TYNAP
      AVLN(KYR1,IPLOT) = AVAILN
      CN(KYR1,IPLOT) = HCN
      SCO2C(KYR1,IPLOT) = SCO2
      SOM(KYR1,IPLOT) = FF(19,2)
      ET(KYR1,IPLOT) = AET
```

APPENDIX A (CONTINUED)

```
C.....
C.....WRITE STATEMENT TO STORE DATA ON TAPE
C.....
C     WRITE(9) (BAR(IV1),IV1=1,NSPEC),(NTREES(IV1),IV1=1,NSPEC),
C    1TBAR,ATOT,AREA,DEGD,FJ,AVAILN,((FF(K,L),K=1,18),L=1,3),
C    2(TYL(J),J=1,20),HCN,SCO2,AET
C.....
C.....BYPASS STATISTICAL CALCULATIONS IF IT IS NOT THE LAST YEAR
C.....OF THE LAST PLOT
C.....
      IF(KWRITE.LT.NWRITE) GO TO 60
C.....
C.....INITIALIZE SUMMATION ARRAYS
C.....
      DO 35 I=1,70
      XSTEM(I) = 0.0
      XTAB(I) = 0.0
      XFL(I) = 0.0
      XTL(I) = 0.0
      XNAP(I) = 0.0
      XAVLN(I) = 0.0
      XCN(I) = 0.0
      XSCO2C(I) = 0.0
      XSOM(I) = 0.0
      XET(I) = 0.0
      SSTEM(I) = 0.0
      STAB(I) = 0.0
      SFL(I) = 0.0
      STL(I) = 0.0
      SNAP(I) = 0.0
      SAVLN(I) = 0.0
      SCN(I) = 0.0
      SSCO2C(I) = 0.0
      SSOM(I) = 0.0
      SET(I) = 0.0
   35 CONTINUE
C.....
C.....CHOOSE APPROPRIATE STUDENT'S T FOR CONFIDENCE INTERVALS
C.....
      L = KLAST
      IF(L.GT.30) L=30
      TS=ST(L)
C.....
C.....BEGIN MAIN STATISTICAL LOOP
C.....
      DO 40 I = 1,NMAX
C.....
C.....ACCUMULATE SUMS
C.....
```

APPENDIX A (CONTINUED)

```
      DO 50 J = 1,KLAST
      XSTEM(I) = XSTEM(I) + TSTEM(I,J)
      XTAB(I) = XTAB(I) + TAB(I,J)
      XFL(I) = XFL(I) + FL(I,J)
      XTL(I) = XTL(I) + TOTL(I,J)
      XNAP(I) = XNAP(I) + TNAP(I,J)
      XAVLN(I) = XAVLN(I) + AVLN(I,J)
      XCN(I) = XCN(I) + CN(I,J)
      XSCO2C(I) = XSCO2C(I) + SCO2C(I,J)
      XSOM(I) = XSOM(I) + SOM(I,J)
      XET(I) = XET(I) + ET(I,J)
C.....
C.....ACCUMULATE SUMS OF SQUARES
C.....
      SSTEM(I) = SSTEM(I) + TSTEM(I,J)**2
      STAB(I) = STAB(I) + TAB(I,J)**2
      SFL(I) = SFL(I) + FL(I,J)**2
      STL(I) = STL(I) + TOTL(I,J)**2
      SNAP(I) = SNAP(I) + TNAP(I,J)**2
      SAVLN(I) = SAVLN(I) + AVLN(I,J)**2
      SCN(I) = SCN(I) + CN(I,J)**2
      SSCO2C(I) = SSCO2C(I) + SCO2C(I,J)**2
      SSOM(I) = SSOM(I) + SOM(I,J)**2
      SET(I) = SET(I) + ET(I,J)**2
 50   CONTINUE
     PLOTS = KLAST
C.....
C.....FIND MEANS
C.....
     AVG(I,1) = NYR(I)
     AVG(I,2) = XSTEM(I)/PLOTS
     AVG(I,3) = XTAB(I)/PLOTS
     AVG(I,4) = XFL(I)/PLOTS
     AVG(I,5) = XTL(I)/PLOTS
     AVG(I,6) = XNAP(I)/PLOTS
     AVG(I,7) = XAVLN(I)/PLOTS
     AVG(I,8) = XCN(I)/PLOTS
     AVG(I,9) = XSCO2C(I)/PLOTS
     AVG(I,10) = XSOM(I)/PLOTS
     AVG(I,11) = XET(I)/PLOTS
C.....
C.....BYPASS CONFIDENCE INTERVAL CALCULATIONS IF ONLY ONE PLOT
C.....
     IF(PLOTS.EQ.1.) GO TO 40
C.....
C.....FIND 95% CONFIDENCE INTERVALS
C.....
 51  CONF(I,1) = NYR(I)
 52  Y2=((SSTEM(I)-(XSTEM(I)**2)/PLOTS)/(PLOTS-1.))/
```

APPENDIX A (CONTINUED)

```
     &PLOTS
      IF(Y2.LT..001) Y2=0.0
      CONF(I,2)=TS*SQRT(Y2)
 53   Y3=((STAB(I)-(XTAB(I)**2)/PLOTS)/(PLOTS-1.))/
     &PLOTS
      IF(Y3.LT..001) Y3=0.0
      CONF(I,3)=TS*SQRT(Y3)
 54   Y4=((SFL(I)-(XFL(I)**2)/PLOTS)/(PLOTS-1.))/PLOTS
      IF(Y4.LT..001) Y4=0.0
      CONF(I,4)=TS*SQRT(Y4)
 55   Y5=((STL(I)-(XTL(I)**2)/PLOTS)/(PLOTS-1.))/PLOTS
      IF(Y5.LT..001) Y5=0.0
      CONF(I,5)=TS*SQRT(Y5)
 56   Y6=((SNAP(I)-(XNAP(I)**2)/PLOTS)/(PLOTS-1.))/
     &PLOTS
      IF(Y6.LT..001) Y6=0.0
      CONF(I,6)=TS*SQRT(Y6)
 57   Y7=((SAVLN(I)-(XAVLN(I)**2)/PLOTS)/(PLOTS-1.))/
     &PLOTS
      IF(Y7.LT..001) Y7=0.0
      CONF(I,7)=TS*SQRT(Y7)
 58   Y8=((SCN(I)-(XCN(I)**2)/PLOTS)/(PLOTS-1.))/PLOTS
      IF(Y8.LT..001) Y8=0.0
      CONF(I,8)=TS*SQRT(Y8)
 59   Y9=((SSCO2C(I)-(XSCO2C(I)**2)/PLOTS)/(PLOTS-1.))/
     &PLOTS
      IF(Y9.LT..001) Y9=0.0
      CONF(I,9)=TS*SQRT(Y9)
 41   Y10=((SSOM(I)-(XSOM(I)**2)/PLOTS)/(PLOTS-1.))/
     &PLOTS
      IF(Y10.LT..001) Y10=0.0
      CONF(I,10)=TS*SQRT(Y10)
 42   Y11=((SET(I)-(XET(I)**2)/PLOTS)/(PLOTS-1.))/PLOTS
      IF(Y11.LT.001) Y11=0.0
      CONF(I,11)=TS*SQRT(Y11)
  40  CONTINUE
C.....
C.....WRITE STATISTICS TO PRINTER
C.....
      WRITE(6,3003)
      WRITE(6,3001)
 3001 FORMAT(' '/'  YR',5X,'NUM',5X,'A.G.',4X,'LEAF',4X,'LEAF ',3X,
     &'A.G.',4X,'AVAIL',3X,'HUMUS',3X,'SOIL',4X,'SOIL',4X,'AET')
      WRITE(6,3002)
 3002 FORMAT(' ',7X,'STEMS',2X,'BIOMASS',2X,'LITTER',2X,'LITR N',3X,
     &'NPP',7X,'N',6X,'C:N',4X,'CO2-C',3X,'O.M.')
      WRITE(6,3003)
 3003 FORMAT(' '/'-----------------------------------------------------------',
     &'-----------------------------------------------------------'/)
```

APPENDIX A (CONTINUED)

```
      WRITE(6,3004) KLAST
 3004 FORMAT(' '/' ',26X,' AVERAGE ACROSS ',I3,' PLOTS')
      WRITE(6,3005)
 3005 FORMAT(' ',8X,'-----------------------------------------------------------',
     &'-----------------------------------'/)
      WRITE(6,3000) ((AVG(I,J),J=1,11),I=1,NMAX)
      IF(PLOTS.EQ.1.) GO TO 60
      WRITE(6,3006)
 3006 FORMAT(' '/' ',26X,' 95% CONFIDENCE INTERVALS')
      WRITE(6,3005)
      WRITE(6,3000) ((CONF(I,J),J=1,11),I=1,NMAX)
  60  CONTINUE
 3000 FORMAT(F5.0,2F8.0,3F8.1,F8.0,F8.1,F8.2,F8.1,F8.0)
      RETURN
      END
```

APPENDIX A (CONTINUED)

```
C
C                         SUBROUTINE PLOTIN
C
C
C     SUBROUTINE PLOTIN INITIALIZES VARIABLES TO START SIMULATION ON
C     BARE PLOTS.
C     NTREES CONTAINS NUMBER OF TREES FOR EACH SPECIES
C     DBH CONTAINS DIAMETER AT BREAST HEIGHT FOR EACH TREE
C     KSPRT IS USED TO FLAG TREES ELIGIBLE TO SPROUT
C     NOGRO IS USED TO FLAG SLOWLY GROWING TREES
C     IAGE CONTAINS THE AGE OF EACH TREE
C     C CONTAINS DATA ON LITTER COHORTS
C     C(1,1) IS HUMUS WEIGHT (BASESC IS STARTING VALUE)
C     C(1,2) IS HUMUS N CONTENT (BASESN IS STARTING VALUE)
C     C(I,5) IS "LITTER TYPE" FOR HUMUS
C     NCOHRT IS NUMBER OF LITTER COHORTS PRESENT
C     (IF NOCOHRT = 1, ONLY HUMUS IS PRESENT)
C     TYL CONTAINS THIS YEAR'S LITTER
C
      SUBROUTINE PLOTIN(IPLOT)
      COMMON/FOREST/NTREES(100),DBH(1500),IAGE(1500),KSPRT(100),
     > NEWTR(100),SUMLA(700),NEW(100),SWTCH(5)
      COMMON/CONST/NSPEC,DEGD
      COMMON/DEAD/NOGRO(1599),NTEMP(1500)
      COMMON/DCMP/AVAILN,TYL(20),C(100,15),FDAT(20,10),FF(20,3),
     1NCOHRT,HCN,BASESC,BASESN,SCO2,TYLN
      IPLOT = IPLOT+1
      DO 10 I=1,NSPEC
         NTREES(I) = 0
         DBH(I) = 0.
         NOGRO(I) = 0
         KSPRT(I) = 0
         IAGE(I) = 0
   10    CONTINUE
      NSPE1 = NSPEC+1
      DO 20 I=NSPE1,1500
         DBH(I) = 0.
         NOGRO(I) = 0
         IAGE(I) = 0
   20    CONTINUE
      DO 30 I=1,100
      DO 30 J=1,15
      C(I,J)=0.0
   30 CONTINUE
      C(1,1)=BASESC
      C(1,2)=BASESN
      C(1,5)=18.
```

APPENDIX A (CONTINUED)

```
      NCOHRT=1
      DO 40 I=1,20
      TYL(I)=0.0
   40 CONTINUE
      RETURN
      END
```

APPENDIX A (CONTINUED)

```
C
C                    SUBROUTINE   TEMPE
C
C
C     TEMPE CALCULATES GROWING SEASON DEGREE DAYS (DEGD) BASED ON
C     MONTHLY TEMPERATURES NORMALLY DISTRIBUTED AROUND A SPECIFIED
C     MEAN WITH A SPECIFIED STND DEV. THE TEMPERATURES ARE SUPPLIED
C     BY SUBROUTINE GGNORD USING RANDOM NUMBER GENERATOR URAND AND
C     ARE LINERALY INTERPOLATED BETWEEN YEARS OF DIFFERENT CLIMATES
C     BY SUBROUTINE LININT
C
      SUBROUTINE TEMPE(DEGD,KYR)
      COMMON/WATER/T(12),VT(12),RT(12),R(12),VR(12),FC,DRY,BGS,EGS,PLAT,
     1FJ,AET
      COMMON/SEED/USEED(15)
      DIMENSION DAYS(12),Z(2)
      INTEGER USEED
      DATA DAYS/31.,28.,31.,30.,31.,30.,31.,31.,30.,31.,30.,31./
      DATA NCT/0/
      YR = KYR
C.....
C.....DDBASE IS TEMPERATURE (C) ABOVE WHICH DEGREE DAYS (DEGD)
C.....ARE COUNTED
C.....
      DDBASE = 5.56
C.....
C.....INITIALIZE DEGREE DAYS AND MONTHLY TEMPERATURES USED TO
C.....CALCULATE THEM (IN ARRAY RT)
C.....
      DEGD = 0.
      DO 3 I=1,12
    3 RT(I) = 0.
C.....
C.....CALL SUBROUTINE LININT TO MAKE LINEAR INTERPOLATIONS OF MONTHLY
C.....TEMPERATURES AND STND DEVS BETWEEN YEARS OF DIFFERENT CLIMATE.
C.....
      CALL LININT(T,VT,YR,1)
      DO 1 I=1,12
      NCT = NCT+1
      IF(NCT .EQ. 2) GO TO 36
C.....
C.....CALL GGNORD TO PROVIDE NORMALLY DISTRIBUTED RANDOM NUMBERS
C.....
      CALL GGNORD(USEED(12),USEED(13),Z)
      GO TO 38
   36 Z(1) = Z(2)
      NCT = 0
   38 CONTINUE
```

APPENDIX A (CONTINUED)

```
C.....
C.....CALCULATE MONTHLY TEMPERATURES (INTERPOLATED MEAN +/-
C.....NORMALLY DISTRIBUTED RANDOM NUMBER TIMES INTERPOLATED
C.....STND DEV
C.....
      RT(I) = T(I)+VT(I)*Z(1)
      IF(RT(I) .LE. DDBASE) GO TO 1
C.....
C.....SUM DEGREE DAYS FOR CONSECUTIVE MONTHS
C.....
      DEGD = DEGD+(RT(I)-DDBASE)*DAYS(I)
    1 CONTINUE
      RETURN
      END
```

APPENDIX A (CONTINUED)

```
C
C                 FUNCTION URAND
C
C
C     URAND IS A UNIFORM RANDOM NUMBER GENERATOR DOCUMENTED AND
C     DISCUSSED IN FORSYTHE ET AL.1977.COMPUTER METHODS FOR MATHEMATICAL
C     COMPUTATIONS. PRENTICE-HALL, ENGLEWOOD CLIFFS, NJ.
C     THE INTEGER IY IS INITIALIZED IN USEED(I)
C     PRIOR TO THE FIRST CALL TO URAND. THE CALLING PROGRAM SHOULD NOT
C     ALTER THE VALUE OF IY BETWEEN SUBSEQUENT CALLS TO URAND.
C     IY IS STORED IN USEED(I) AND IS THE SEED FOR THE NEXT
C     TIME USEED(I) IS USED IN A RANDOM NUMBER CALL. VALUES
C     OF URAND WILL BE RETURNED IN THE INTERVAL (0,1).
C
      REAL FUNCTION URAND(IY)
      INTEGER IY
      INTEGER IA,IC,ITWO,M2,M,MIC
      DOUBLE PRECISION HALFM
      REAL S
      DOUBLE PRECISION DATAN,DSQRT
      DATA M2/0/,ITWO/2/
      IF(M2.NE.0) GO TO 20
C.....
C.....IF FIRST ENTRY COMPUTE MACHINE INTEGER WORD LENGTH
C.....
      M=1
   10 M2=M
      M=ITWO*M2
      IF(M.GT.M2) GO TO 10
      HALFM=M2
C.....
C.....COMPUTE MULTIPLIER AND INCREMENT FOR LINEAR CONGRUENTIAL METHOD
C.....
      IA=8*IDINT(HALFM*DATAN(1.D0)/8.D0)+5
      IC=2*IDINT(HALFM*(0.5D0-DSQRT(3.D0)/6.D0))+1
      MIC=(M2-IC)+M2
C.....
C.....S IS THE SCALE FACTOR FOR CONVERTING TO FLOATING POINT
C.....
      S=0.5/HALFM
C.....
C.....COMPUTE NEXT RANDOM NUMBER
C.....
   20 IY=IY*IA
C.....
C.....THE FOLLOWING IS FOR COMPUTERS WHICH DO NOT ALLOW
C.....INTEGER OVERFLOW ON ADDITION
C.....
```

APPENDIX A (CONTINUED)

```
      IF(IY.GT.MIC) IY=(IY-M2)-M2
      IY=IY+IC
C.....
C.....THE FOLLOWING IS FOR COMPUTERS WHERE THE WORD LENGTH
C.....FOR ADDITION IS GREATER THAN FOR MULTIPLICATION
C.....
      IF(IY/2 .GT. M2) IY=(IY-M2)-M2
C.....
C.....THE FOLLOWING IS FOR COMPUTERS WHERE INTEGER
C.....OVERFLOW AFFECTS THE SIGN BIT
C.....
      IF(IY.LT.0) IY=(IY+M2)+M2
      URAND=FLOAT(IY)*S
      RETURN
      END
```

APPENDIX A (CONTINUED)

```
KPRNT= 20 KLAST= 20 NYEAR=  250
IPOLAT= 2
     0.   250.
PLAT=43.60 PLONG= 89.8 BGS=120. EGS=273. FC=38.8 DRY=20.0
MEAN T     -8.6  -7.6  -1.9   6.9  13.7  19.0  21.6  20.5  15.9   9.6   0.8  -6.1
           -8.6  -7.6  -1.9   6.9  13.7  19.0  21.6  20.5  15.9   9.6   0.8  -6.1
STND DEV    2.9   2.7   2.7   2.0   1.9   1.7   1.4   1.5   1.5   2.0   2.3   2.5
            2.9   2.7   2.7   2.0   1.9   1.7   1.4   1.5   1.5   2.0   2.3   2.5
MEAN PPT    2.9   2.7   4.2   7.0   9.2  11.2   8.0   8.9   8.9   5.7   5.5   2.9
            2.9   2.7   4.2   7.0   9.2  11.2   8.0   8.9   8.9   5.7   5.5   2.9
STND DEV    1.6   1.9   1.9   2.7   4.1   4.5   3.0   3.6   5.8   3.7   3.4   1.4
            1.6   1.9   1.9   2.7   4.1   4.5   3.0   3.6   5.B   3.7   3.4   1.4
NSPEC= 72
ABIES BALSAMEA          2386. 0560.545254.521200.  68.85          FFTFF   8    1
 .165  -25 10 2.79 219.77 .00179 -0.6 1.0 440. .804 .069 1.0 3.
ABIES FRASERI           2763. 2663.336367.262200.  152.40. 0.  0. FFTFF   8    2
 .025   -7 10 2.79 219.77 .00179 -0.6 1.0 440. .804 .069 1.0 3.
ACER RUBRUM             6600. 1260.286357.262150.  176.13.12.0200.FTTTF 100    3
 .230  -18  2 2.79 219.77 .00179 -0.6 1.0 440. .814 .078 1.0 1.
ACER SACCHARINUM        4700. 1600.198847.722125.  212.31.6.  50. FTTFT  20    4
 .268  -12  2 2.79 219.77 .00179 -0.6 1.0 440. .814 .078 1.0 1.
ACER SACCHARUM          3100. 1222.127238.171300.  88.983.12.0 80.FFTFF 140    5
 .080  -18  2 2.94 117.52 .00234 -1.2 1.3 440. .814 .078 1.0 1.
BETULA LENTA            3066. 1402.349052.351265.  71.  3. 12.100.FTTTF  20    6
 .177   -2  4 2.94 117.52 .00234 -1.2 1.3 248. .804 .069 0.8 1.
CARYA CORDIFORMIS       5076. 1910.286357.261300.  88.051.12.0200.TFTFF  20    7
 .320  -12  4 2.94 117.52 .00234 -1.2 1.3 248. .804 .069 0.8 1.
CARYA GLABRA            6960. 1910.286357.261300.  88.052.12.0200.TFTFF  20    8
 .200   -7  4 2.94 117.52 .00234 -1.2 1.3 248. .804 .069 0.8 1.
CARYA LACINOSA          4615. 2493.286357.261300.  88.052.12. 90. TFTFF  20    9
 .220   -4  4 2.94 117.52 .00234 -1.2 1.3 248. .804 .069 0.8 1.
CARYA OVATA             5500. 1670.286357.261275.  96.051.12.0200.TFTFF  20   10
 .200   -7  4 2.94 117.52 .00234 -1.2 1.3 248. .804 .069 0.8 1.
CARYA TEXANA            5076. 2660.286357.261300.  88.052.12. 110.TFTFF  20   11
 .478   -1  4 2.94 117.52 .00234 -1.2 1.3 248. .804 .069 0.8 1.
CARYA TOMENTOSA         5993. 1910.266353.261300.  82.631.12.0200.TFTFF  20   12
 .300   -4  4 2.94 117.52 .00234 -1.2 1.3 248. .804 .069 0.8 1.
CASTANEA DENTATA        4571. 1910.149544.841300.  102.63.12. 200.TFFFF  20   13
 .300   -2  2 2.99 207.43 .00175 -5.0 2.9 440. .814 .078 1.0 1.
CELTIS LAEVIGATA        6960. 2660.509076.351200.  131.02.6.  115.TFFFF  20   14
 .085   -1  2 2.99 207.43 .00175 -5.0 2.9 440. .814 .078 1.0 1.
CORNUS FLORIDA          5993. 1910.1.3869.041100.  92.603.12.0200.FFTFF  20   15
 .250   -4  1 2.99 207.43 .00175 -5.0 2.9 440. .814 .078 1.0 1.
FAGUS GRANDIFOLIA       5537. 1326.286357.261366.  72.172. 6.0 30.FFTFF  40   16
 .200  -12  8 2.94 117.52 .00234 -1.2 1.3 440. .904 .095 1.0 1.
FRAXINUS AMERICANA      5993. 1398.286357.261300.  88.052. 6.0 20.FTTTF  40   17
 .280  -12  2 2.99 207.43 .00175 -5.0 2.9 440. .428 .074 1.0 1.
FRAXINUS NIGRA          2261. 1000.236347.262300.  74.512.6.  20. FFFTT  40   18
 .022  -18  2 2.99 207.43 .00175 -5.0 2.9 440. .428 .074 1.0 1.
FRAXINUS PENNSYLVANICA  5482. 1050.286357.262150.  176.01.6.  50. FTFFF  40   19
 .114  -23  2 2.99 207.43 .00175 -5.0 2.9 440. .428 .074 1.0 1.
```

APPENDIX A (CONTINUED)

```
PRUNUS PENNSYLVANICA     2500.  560.1.2670.602 30.  200.00. 0.0  0.FFFFF 600   20
 .160  -23  3 2.79 219.77 .00179 -0.6 1.0 173. .729 .044 0.5 1.
JUGLANS CINEREA         3267. 1870.286357.262100.  264.11. 6.  12.FTTFF  20   21
 .200  -12  9 2.94 117.52 .00234 -1.2 1.3 440. .428 .074 1.0 1.
JUGLANS NIGRA           4571. 1910.149544.842250.  123.11. 6.0 20.TFTFT  20   22
 .300   -8  9 2.94 117.52 .00234 -1.2 1.3 440. .428 .074 1.0 1.
JUNIPERUS VIRGINIANA    5537. 1721.331249.682300.  60.32 .        FTFFT  20   23
 .397  -10  6 2.79 219.77 .00179 -0.6 1.0 440. .804 .069 1.0 2.
LIQUIDAMBAR STYRACIFLUA 5993. 2660.215253.812250.  122.62.12.0 80.FFFTF  20   24
 .300   -1  2 2.99 207.43 .00175 -5.0 2.9 440. .814 .078 1.0 1.
LIRIODENDRON TULIPIFERA 5993. 2300.149544.842300.  102.62.12.0200.FTFFT 400   25
 .160   -2  2 2.99 207.43 .00175 -5.0 2.9 440. .814 .078 1.0 1.
CARPINUS CAROLINIANA    6011. 1344.1.3869.041150.  61.742. 6.0 70.FFFFF  20   26
 .300  -12  9 2.99 207.43 .00175 -5.0 2.9 173. .729 .044 0.5 1.
PICEA GLAUCA            1911. 280. 710590.961200.  132.3          FFFFF   8   27
 .309  -30 11 2.79 219.77 .00179 -0.6 1.0 440. .804 .069 1.0 3.
PICEA MARIANA           1911. 247. 1.1693.151250.  70.491.10. 20. FFTFF   8   28
 .270  -30 11 2.79 219.77 .00179 -0.6 1.0 440. .804 .069 1.0 3.
PICEA RUBENS            2562. 1247.286357.261400.  66.  0. 0.  0. FTTFF   8   29
 .237  -12 11 2.79 219.77 .00179 -0.6 1.0 440. .804 .069 1.0 3.
PINUS BANKSIANA         2216. 830. 945294.522150.  145.5          FFTTF 140   30
 .411  -30 12 2.79 219.77 .00179 -0.6 1.0 440. .804 .069 1.0 2.
PINUS ECHINATA          5076. 2660.286357.262300.  88.052. 6.0 20.FTFFF  20   31
 .423   -1 12 2.79 219.77 .00179 -0.6 1.0 440. .804 .069 1.0 2.
PINUS RESINOSA          2035. 1100.420163.012310.  71.44          FTTFF 140   32
 .385  -20 12 2.79 219.77 .00179 -0.6 1.0 440. .804 .069 1.0 2.
PINUS STROBUS           3165. 1100.149544.842450.  68.37 .        TTTFF 140   33
 .310  -20 12 2.79 219.77 .00179 -0.6 1.0 440. .804 .069 1.0 2.
PINUS TAEDA             5993. 3165.291258.232250.  107.20.0.  0.  FTFFF 500   34
 .360    4 12 2.79 219.77 .00179 -0.6 1.0 440. .804 .069 1.0 2.
PINUS VIRGINIANA        3671. 2660.545254.522250.  55.08 .        FTFFT 350   35
 .226   -3 12 2.79 219.77 .00179 -0.6 1.0 440. .804 .069 1.0 2.
PLATANUS OCCIDENTALIS   5482. 1926.109838.432500.  61.742.6.  50. FTTFT  20   36
 .120   -7  5 2.94 117.52 .00234 -1.2 1.3 440. .904 .095 1.0 1.
QUERCUS ALBA            5537. 1721.336367.261400.  76.192.12.0 40.TFFFF  40   37
 .330  -12  5 2.94 117.52 .00234 -1.2 1.3 440. .904 .095 1.0 1.
QUERCUS COCCINEA        4571. 2037.420163.011400.  55.372.12.0 80.TFFFF  20   38
 .286   -7  5 2.79 219.77 .00179 -0.6 1.0 440. .904 .095 1.0 1.
QUERCUS FALCATA         5993. 2660.336367.261400.  76.192.12.0 30.TFFFF  20   39
 .423    2  9 2.94 117.52 .00234 -1.2 1.3 440. .904 .095 1.0 1.
QUERCUS LYRATA          5315. 2926.369259.082250.  88.781.5.  12. TTTTF  20   40
 .031    4  5 2.79 219.77 .00179 -0.6 1.0 440. .904 .095 1.0 1.
QUERCUS MARILANDICA     5537. 2493.545254.522400.  34.  2.12. 40. FFFFF  20   41
 .422   -1  9 2.79 219.77 .00179 -0.6 1.0 440. .904 .095 1.0 1.
QUERCUS NUTTALLII       5260. 3371.420163.012250.  88.591.6.  12. TFTFT  20   42
 .030    4  9 2.79 219.77 .00179 -0.6 1.0 440. .904 .095 1.0 1.
QUERCUS PRINUS          4110. 1910.286357.261267.  98.932.12.0 40.TFFFF  20   43
 .285   -7  9 2.79 219.77 .00179 -0.6 1.0 440. .904 .095 1.0 1.
QUERCUS RUBRA           4571. 1100.286357.261400.  66.032.12.0 40.TFFFF  40   44
 .225  -17  9 2.94 117.52 .00234 -1.2 1.3 440. .904 .095 1.0 1.
QUERCUS SHUMARDII       5993. 2493.336367.262300.  101.62.12. 160.FTFFF  20   45
 .484   -3  9 2.79 219.77 .00179 -0.6 1.0 440. .904 .095 1.0 1.
```

APPENDIX A (CONTINUED)

```
QUERCUS STELLATA        5993. 2660.420163.012400.  55.372.12.0 30.TFFFF  20   46
 .555   -4  5 2.79 219.77 .00179 -0.6 1.0 440. .904 .095 1.0 1.
QUERCUS VELUTINA        5076. 1810.286357.261300.  88.052.12.0 40.FTFFF  20   47
 .300  -10  9 2.79 219.77 .00179 -0.6 1.0 440. .904 .095 1.0 1.
TILIA AMERICANA         3137. 1400.286357.261140.  188.73.12. 80. FFFTF  20   48
 .200  -17  2 2.99 207.43 .00175 -5.0 2.9 440. .814 .078 1.0 1.
TILIA HETEROPHYLLA      4571. 2660.286357.261150.  176.13.12.0 80.FTTFF  20   49
 .211   -1  2 2.99 207.43 .00175 -5.0 2.9 440. .814 .078 1.0 1.
TSUGA CANADENSIS        3800. 1324.149544.841650.  47.  0. 0. 0.  FFTTF   8   50
 .180  -12  6 2.79 219.77 .00179 -0.6 1.0 440. .804 .069 1.0 3.
ULMUS ALATA             5993. 2660.331249.682125.  144.81.6.  110.FFFFF  20   51
 .300    2  5 2.79 219.77 .00179 -0.6 1.0 440. .804 .069 1.0 1.
ULMUS AMERICANA         6960. 1204.369259.082300.  73.982.6.  240.FFTFF  20   52
 .330  -20  5 2.94 117.52 .00234 -1.2 1.3 440. .804 .069 1.0 1.
AESCULUS OCTANDRA       3671. 2660.286357.261100.  264.11.12.0200.TFTFF  20   53
 .175   -1  5 2.99 207.43 .00175 -5.0 2.9 440. .804 .069 1.0 1.
BETULA POPULIFOLIA      2880. 1007.1.3869.042250.  37.041. 10. 30.FTFTF  20   54
 .130  -11  4 2.79 219.77 .00179 -0.6 1.0 248. .804 .069 0.8 1.
BETULA PAPYRIFERA       2036.  484.236347.262140.  159.71. 10. 30.FTTTF 120   55
 .280  -28  4 2.79 219.77 .00179 -0.6 1.0 248. .804 .069 0.8 1.
FRAXINUS QUADRANGULATA  3733. 2246.286357.262300.  88.052.  6. 20.FTFTF  20   56
 .200   -4  2 2.99 207.43 .00175 -5.0 2.9 440. .428 .074 1.0 1.
LARIX LARICINA          2660.  280.420163.012335.  66.110.  0.  0.FTTTT   8   57
 .267  -29 12 2.79 219.77 .00179 -0.6 1.0 440. .804 .069 1.0 1.
POPULUS BALSAMIFERA     2491.  555.420163.012150.  147.63. 20.200.FFTFF 200   58
 .267  -30  7 2.79 219.77 .00179 -0.6 1.0 248. .804 .069 0.5 1.
POPULUS GRANDIDENTATA   3169. 1100.420163.012 70.  316.42.  2. 70.FFFTT 200   59
 .267  -18  7 2.79 219.77 .00179 -0.6 1.0 248. .804 .069 0.5 1.
POPULUS TREMULOIDES     2461.  743.366855.012125.  157.83. 20.150.FFFFF 200   60
 .267  -30  7 2.79 219.77 .00179 -0.6 1.0 248. .804 .069 0.5 1.
QUERCUS MACROCARPA      5153. 1700.369259.081300.  73.982. 10. 30.TTFFF  20   61
 .350  -20  5 2.79 219.77 .00179 -0.6 1.0 440. .904 .095 1.0 1.
QUERCUS MUEHLENBERGII   4849. 1958.286357.262300.  88.052. 10. 30.TTFFF  20   62
 .300   -7  9 2.94 117.52 .00234 -1.2 1.3 440. .904 .095 1.0 1.
QUERCUS PALUSTRIS       5153. 2217.420163.012200.  110.73. 10.100.TTTFT  20   63
 .013   -6  9 2.79 219.77 .00179 -0.6 1.0 440. .904 .095 1.0 1.
QUERCUS VIRGINIANA      6674. 4849.082824.841300.  61.843. 10.150.TTTFF  20   64
 .512    7  5 2.79 219.77 .00179 -0.6 1.0 440. .904 .095 1.0 1.
THUJA OCCIDENTALIS      2188. 1000.230346.041400.  54.63.   5.400.TTTTF   8   65
 .350  -20  6 2.79 219.77 .00179 -0.6 1.0 248. .804 .069 1.0 3.
NYSSA SYLVATICA         6960. 1910.286357.262300.  88.051.80.0200.FTFFF  20   66
 .301   -2  2 2.99 207.43 .00175 -5.0 2.9 440. .814 .078 1.0 1.
OSTRYA VIRGINIANA       5556. 1278.545254.521100.  137.72. 6.0 20.FTFFF  20   67
 .280  -18  9 2.94 117.52 .00234 -1.2 1.3 173. .729 .044 0.5 1.
PRUNUS SEROTINA         5993. 2132.286357.262200.  132.13.12.0200.FFFTF  20   68
 .300  -10  3 2.99 207.43 .00175 -5.0 2.9 173. .729 .044 0.5 1.
BETULA ALLEGENESIS      2500. 1100.501376.401250.  106.43.12.0100.FFTTF 120   69
 .200  -18  4 2.94 117.52 .00234 -1.2 1.3 248. .804 .069 0.8 1.
PINUS RIGIDA            3100. 1940.331249.682200.  90.492. 6.0 20.FTFFF  20   70
 .307   -7 12 2.79 219.77 .00179 -0.6 1.0 440. .B04 .069 1.0 1.
QUERCUS ELLIPSOIDALIS   2234. 2000.420163.012200.  110.73.12. 200.FTFTF  20   71
 .280 -15.  9 2.79 219.77 .00179 -0.6 1.0 440. .904 .095 1.0 1.
```

APPENDIX A (CONTINUED)

```
QUERCUS BOREALIS        3250. 1100.945294.522250.  87.332.12.  40.TFFFF  40   72
 .225 -17.  9 2.79 219.77 .00179 -0.6 1.0 440. .904 .095 1.0 1.
NLVAR = 10 NLT = 17
 0. .0081 .0015 .0130  1. 1. .039  .5217 .336 .90
 0. .0105 .0050 .0160  2. 1. .121  .5219 .400 .90
 0. .0120 .0149 .0290  3. 1. .193  .7787 .508 .92
 0. .0088 .0092 .0200  4. 1. .158  .6693 .435 .92
 0. .0083 .0033 .0130  5. 1. .187  .5194 .315 .93
 0. .0083 .0065 .0150  6. 1. .206  .6839 .475 .96
 0. .0083 .0095 .0170  7. 1. .214  .7059 .460 .94
 0. .0090 .0367 .0480  8. 1. .241 1.1967 .790 .91
 0. .0086 .0089 .0180  9. 1. .248  .6105 .359 .95
 0. .0070 .0052 .0150 10. 1. .280  .5926 .383 .97
 0. .0046 .0215 .0072 11. 1. .216  .9052 .594 .97
 0. .0045 .0042 .0082 12. 1. .283  .5646 .327 .96
 0. .0093 .0108 .0150 13. 1. .253  .7000 .456 .98
 0. .0030 .0000 .0050 14. 2. .173  .4831 .299 .99
 0. .0030 .0000 .0050 15. 2. .173  .4831 .299 .99
 0. .0030 .0113 .0090 16. 1. .173  .4831 .299 .96
 0. .0050 .0113 .0200 17. 1. .423  .9061 .299 .99
NCOHRT = 1
74. 1.640             18. 0.
```

APPENDIX B

MODELING CARBON AND NITROGEN FLOWS DURING DECOMPOSITION

B.1 DEVELOPMENT OF A DECAY-RATE EQUATION

We used the approach of Meentemeyer (1978) to develop an equation that predicts decay rate from AET and lignin:nitrogen ratios. Four study sites ranging from 390 $mm \cdot yr^{-1}$ AET to 713 $mm \cdot yr^{-1}$ AET and encompassing a wide range of litter types were chosen from the literature:

1. Jadraas, Sweden; AET = 390 $mm \cdot yr^{-1}$; litter materials include Scots-pine (Pinus sylvestris) needles, birch (Betula pubescens) leaves, cowberry (Vaccinium vitis-idaea) leaves, and heather (Calluna vulgaris) shoots with lignin:N ratios ranging from 35 to 66 (Berg et al. 1985);
2. Moorhouse, England; AET = 449 $mm \cdot yr^{-1}$; 13 different litter materials with lignin:nitrogen ratios ranging from 5 to 70 (Heal et al. 1978);
3. Blackhawk Island, Wisconsin; AET = 600 $mm \cdot yr^{-1}$; litter materials include sugar maple (Acer saccharum), bigtooth aspen (Populus grandidentata), white oak (Quercus alba), white pine (Pinus strobus) , and hemlock (Tsuga canadensis) leaves ranging in lignin:nitrogen ratios from 15 to 51 (McClaugherty et al. 1985);
4. Coweeta Hydrologic Laboratory, North Carolina; AET = 713 $mm \cdot yr^{-1}$; litter materials include white pine, chestnut oak (Quercus prinus), white oak, red maple (Acer rubrum), and dogwood

APPENDIX B (CONTINUED)

(*Cornus florida*) leaves ranging in lignin:nitrogen ratios from 3 to 34 (Cromack 1973).

Regressions of the form

$$\% \text{ wt loss} = A - B(\text{lignin:N}) \tag{B-1}$$

were developed for each site. The y intercepts of these equations were highly correlated with AET:

$$A = 0.9804 + 0.09352(\text{AET}),\ r = 0.903,\ P < 0.05, \tag{B-2}$$

as was the slope

$$B = -0.4956 + .001927(\text{AET}),\ r = 0.897,\ P < 0.05. \tag{B-3}$$

Substituting (B-2) and (B-3) into (B-1) yields

$$\% \text{ wt loss} = [0.9804 + 0.09352*(\text{AET})] - [-0.4956 + 0.001927*(\text{AET})](\text{lignin:N}). \tag{B-4}$$

When AET is low, decay rate does not vary much with lignin:nitrogen ratios, but as AET increases, these ratios account for more of the variation in decay rates (Fig. B-1). Litterbag studies under way at Walker Branch Watershed (AET = 797 $mm \bullet yr^{-1}$) will provide an independent data base with which to test and refine this equation.

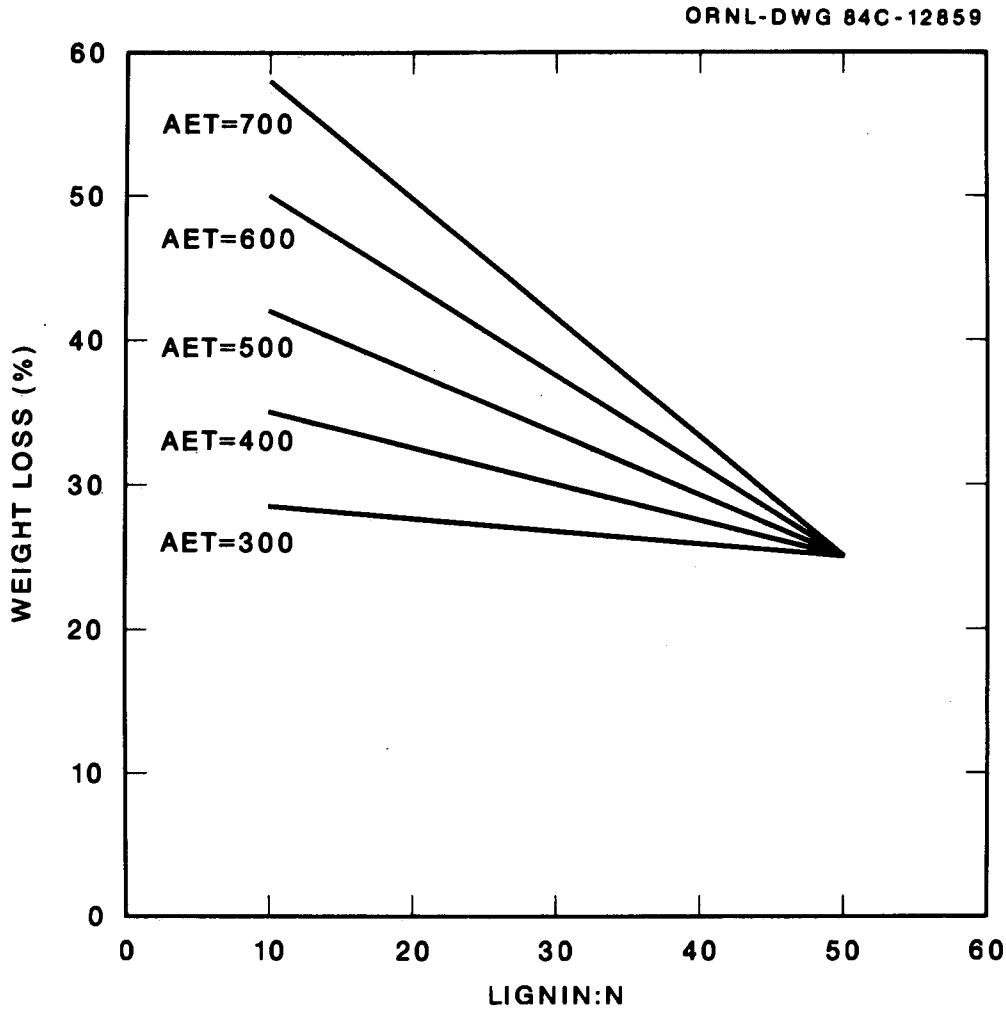

Fig. B-1. Relationships between AET, lignin:nitrogen ratio, and weight loss, as predicted by Eq. (B-4).

B.2 PREDICTING CHANGES IN NITROGEN AND LIGNIN DURING LITTER DECAY

Aber and Melillo (1980) have demonstrated that the percent of nitrogen in decaying material at time t is highly related to the percent of organic matter (OM) remaining at time t. The literature was searched for litterbag data from which the relationship

$$\% \text{ OM remaining} = C + D(\% \text{ N}) \qquad \text{(B-5)}$$

could be derived. Thirty-four cases were found where this relationship was highly significant (r generally >0.90), in addition to the 48 examples already reported by Aber and Melillo (1980). Examples include wood decay, leaf decay in streams, and leaf decay in forests, demonstrating the wide ranging applicability of this method, although the biological reasons are not yet known. Aber and Melillo (1982a) have shown that

$$\text{critical N concentration} = C/(-2D) \ . \qquad \text{(B-6)}$$

Furthermore, the weight loss to this point is calculated as

$$W = 1.0 - C/200 \ , \qquad \text{(B-7)}$$

and the amount of nitrogen immobilized per gram initial weight is

$$N_{immob} = 0.0001((C^2/-4D)-(100(N_o)) \ , \qquad \text{(B-8)}$$

where No is original nitrogen concentration. The grams of nitrogen immobilized per gram weight loss (nitrogen equivalent) is then

$$N_{immob}/W \qquad \text{(B-9)}$$

APPENDIX B (CONTINUED)

Equations (B-6) and (B-9) were solved for all examples found.

Berg et al. (1985) found that lignin concentrations in decaying litter are also negatively correlated with the percent of organic matter remaining:

$$\% \text{ lignin} = E + F(\% \text{ OM remaining}) \quad . \qquad \text{(B-10)}$$

Using data from Wisconsin on white pine, hemlock, white oak, red oak, aspen, and sugar maple leaves (McClaugherty et al. 1985), we found that the intercept (E) of Eq. (B-10) is highly related to the amount of nitrogen equivalent as calculated using Eq. (B-9):

$$E = 49.29 + 1917.84(\text{g N immobilized/g wt loss}) \quad , \qquad \text{(B-11)}$$
$$r = 0.821, P < 0.05.$$

and the slope F is highly correlated with E:

$$F = -0.01558 + 0.00673(E) \quad , \qquad \text{(B-12)}$$
$$r = -0.802, \ P < 0.05.$$

We could, therefore, predict the lignin decay parameters from litterbag studies that measured only changes in organic matter and nitrogen content during decomposition. Biologically speaking, lignin decay is probably what determines nitrogen-immobilization rate (Stevenson 1982), but here we are using the relationship "in reverse" because more data is available on nitrogen immobilization than lignin decay.

After assembling data from the literature on the above parameters and initial lignin and nitrogen concentrations, we classified leaf

APPENDIX B (CONTINUED)

litter into 12 categories based on differences in initial lignin:nitrogen-ratios and nitrogen-immobilization rates (Table B-1). Means were calculated where data were available from several studies. These leaf-litter categories delineate major genera and are numbered from 1 to 12 in order of decreasing decay rate. There are a few major genera (Carya, Liriodendron, Nyssa) for which no data on nitrogen immobilization are available and a number of minor genera for which any data are sketchy. Each of these was assigned to 1 of the 12 leaf-litter categories, based on any available data or taxonomic relationship. Ongoing litterbag studies at Walker Branch Watershed should provide additional data on nitrogen and lignin behavior during decomposition.

Table B-1. Decomposition parameters used in FDAT and C

Tissue type	Class	Species	Initial nitrogen (%)	g N immobilized per g of weight loss	Critical nitrogen (%)	Initial lignin (%)	Lignin parameters[a] A	Lignin parameters[a] B	Ash correction[b]	References[c]
Leaves	1	Dogwood	0.81	0.0015	1.3	3.9	52.17	0.336	0.90	3,11
	2	Maple, ash, basswood	1.05	0.005	1.6	12.1	52.19	0.4	0.9	5,11,12,13,15,16
	3	Cherry	1.2	0.0149	2.9	19.3	77.87	0.508	0.92	12
	4	Birch	0.88	0.0092	2.0	15.8	66.93	0.435	0.92	4,5,12,13,15
	5	White oaks	0.83	0.0033	1.3	18.7	51.94	0.315	0.93	2,3,10,15,17
	6	Hemlock	0.83	0.0065	1.5	20.6	68.39	0.475	0.96	2,11,15,
	7	Aspen	0.83	0.0095	1.7	21.4	70.59	0.46	0.94	2,7,8,12,15,16
	8	Beech	0.90	0.0367	4.8	24.1	119.67	0.790	0.91	5,12
	9	Red oaks	0.86	0.0089	1.8	24.8	61.05	0.359	0.95	2,11,15,17
	10	Fir	0.07	0.0052	1.5	28.0	59.26	0.383	0.97	2,7,8,13,18
	11	Spruce	0.46	0.0215	0.72	21.6	90.52	0.594	0.97	6,14
	12	Pines	0.45	0.0042	0.82	28.3	56.46	0.327	0.96	2,4,11,13,15,17
Roots	13	All	0.93	0.0108	1.5	25.3	70.00	0.456	0.98	10
Fresh wood	14,15	All	0.3	0.0	0.5	17.3	48.31	0.299	0.99	1,2
Twigs	16	All	0.3	0.0113	0.9	17.3	48.31	0.299	0.96	9,11
Well-decayed wood	17	All	0.5	0.0113	2.0	42.3	90.61	0.299	0.99	1,2

[a]% lignin = a − b (% weight remaining).

[b]Ash free weight = ash correction multiplied by dry weight.

[c]References

1. Aber and Melillo (1982)
2. Berg et al. (1985)
3. Cromack (1973)
4. Daubenmire and Prusso (1963)
5. Gosz et al. (1973)
6. Hayes (1965)
7. Lousier and Parkinson (1976,1978)
8. MacLean and Wein (1978)
9. McClaugherty et al. (1984)
10. McClaugherty et al. (1985)
11. Melillo et al. (1982)
12. Melin (1930)
13. Moore (1984)
14. Pastor et al. (1984)
15. Pastor and Bockheim (1984)
16. Sharpe et al. (1980)
17. Vogt et al. (1983)

REFERENCES FOR TABLE B1

Aber, J. D., and J. M. Melillo. 1982b. FORTNITE: A computer model of organic matter and nitrogen dynamics in forest ecosystems. University of Wisconsin Research Bulletin R3130.

Berg, B., G. Ekbohm and C. A. McClaugherty. 1985. Lignin and holocellulose relations during long-term decomposition of some forest litters. Canadian Journal of Botany 62:2540-2550.

Cromack, K. 1973. Litter production and decomposition in a mixed hardwood watershed and a white pine watershed at Coweeta Hydrologic Station, North Carolina. Ph.D. dissertation, University of Georgia, Athens, Georgia.

Daubenmire, R., and D. C. Prusso. 1963. Studies of the decomposition rates of tree litter. Ecology 44:589-592.

Gosz, J. R., G. E. Likens, and F. H. Bormann. 1973. Nutrient release from decomposing leaf and branch litter in the Hubbard Brook Forest, New Hampshire. Ecological Monographs 43:173-191.

Hayes, A. J. 1965. Studies on the decomposition of the coniferous leaf litter. I. Physical and chemical changes. Journal of Soil Science 16:121-140.

Lousier, J. D., and D. Parkinson. 1976. Litter decompostion in a cool temperate forest. Canadian Journal of Botany 54:419-436.

Lousier, J. D., and D. Parkinson. 1978. Chemical element dynamics in decomposing leaf litter. Canadian Journal of Botany 56:2795-2812.

MacLean, D. A., and R. W. Wein. 1978. Weight loss and nutrient changes in decomposing litter and forest floor material in New Brunswick forest stands. Canadian Journal of Botany 56:2730-2749.

McClaugherty, C. A., J. D. Aber, and J. M. Melillo. 1984. Decomposition dynamics of fine roots in forested ecosystems. Oikos 42:378-386.

McClaugherty, C. A., J. Pastor, J. D. Aber, and J. M. Melillo. 1984a. Forest litter decomposition in relation to soil nitrogen dynamics and litter quality. Ecology 66:266-275.

Melillo, J. M., J. D. Aber, and J. F. Muratore. 1982. Nitrogen and lignin control of hardwood leaf litter decomposition dynamics. Ecology 63: 621-626.

Melin, E. 1930. Biological decomposition of some types of litter from North American forests. Ecology 11:72-101.

Moore, T. R. 1984. Litter decomposition in a subarctic spruce-lichen woodland, eastern Canada. Ecology 65:299-308.

Pastor, J., J. D. Aber, C. A. McClaugherty, and J. M. Melillo. 1984. Aboveground production and N and P cycling along a nitrogen mineralization gradient on Blackhawk Island, Wisconsin. Ecology 65: 256-268.

Pastor, J., and J. G. Bockheim. 1984. Distribution and cycling of nutrients in an aspen-mixed hardwood-Spodosol ecosystem in northern Wisconsin. Ecology 65: (in press).

Sharpe, D. M., K. Cromack, Jr., W. C. Johnson, and B. S. Ausmus. 1980. A regional approach to litter dynamics in Southern Appalachian forests. Canadian Journal of Forest Research 10:395-404.

Vogt, K. A., C. C. Grier, C. E. Meier, and M. R. Keyes. 1983. Organic matter and nutrient dynamics in forest floors of young and mature *Abies amabilis* stands in western Washington, as affected by fine-root input. Ecological Monographs 53:139-157.

REFERENCES FOR APPENDIX B

Aber, J. D., and J. M. Melillo. 1980. Litter decomposition: measuring relative contributions of organic matter and nitrogen to forest soils. Canadian Journal of Botany 58: 416-421.

Aber, J. D., and J. M. Melillo. 1982a. Nitrogen immobilization in decaying hardwood leaf litter as a function of initial nitrogen and lignin content. Canadian Journal of Botany 60: 2263-2269.

Berg, B., G. Ekbohm, and C. A. McClaugherty. 1985. Lignin and holocellulose relations during long-term decomposition of some forest litters. Canadian Journal of Botany 62:2540-2550.

Cromack, K. 1973. Litter production and decomposition in a mixed hardwood watershed and a white pine watershed at Coweeta Hydrologic Station, North Carolina. Ph.D. dissertation, University of Georgia, Athens, Georgia.

Heal, O. W., P. M. Latter, and G. Howson. 1978. A study of the rates of decomposition of organic matter. pp. 136-159. In O. W. Heal and D. F. Perkins (eds.) Production Ecology of British Moors and Montane Grasslands. Ecological Studies 27, Springer-Verlag, New York.

McClaugherty, C. A., J. Pastor, J. D. Aber, and J. M. Melillo. 1985. Forest litter decomposition in relation to soil nitrogen dynamics and litter quality. Ecology 66:266-275.

Meentemeyer, V. 1978. Macroclimate and lignin control of litter decomposition rates. Ecology 59: 465-472.

Stevenson, F. J. 1982. Humus chemistry. Genesis, Composition, Reactions. John Wiley and Sons, New York.

APPENDIX C

MODELING THE EFFECTS OF SOIL MOISTURE ON TREE GROWTH

In this appendix we present a general method of identifying species specific parameters that express the relationship between soil moisture availability and tree growth. This method is easy to apply to any tree species in eastern North America.

We derived a parameter D3, defined for each species as the maximum number of growing season "drought" days a species can tolerate before all annual growth is prevented. We define "drought" days in an analogous manner as Basset's (1964) "no-growth" days, the difference being that we use a critical soil-moisture tension of -15 x 10**5 Pa to correspond to the actual evapotranspiration calculations of Thornthwaite and Mather (1957). The parameter D3 is identified by examining the range of soil moisture conditions that a species encounters in its geographical range. In eastern North America the soil moisture conditions at the southwestern or most xeric edge of a species range are used to determine D3, which, in turn, is used to define a multiplicative species-specific function (SMGF) that relates soil moisture conditions and tree growth. At one extreme, where the number of drought days is zero, potential growth or diameter increment is not reduced (SMGF = 1). At the other extreme, determined by observing the soil moisture conditions at the most xeric edge of a species range, potential growth or diameter increment is reduced to zero (SMGF = 0). Basset (1964) showed that basal-area increment is

APPENDIX C (CONTINUED)

linearly related to the number of drought days during the growing season for southern pines. Since basal area varies as the square of diameter, SMGF for diameter increment is

$$SMGF = \begin{cases} SQRT[(D3*TGS-FJ)/(D3*TGS)] & FJ < D3*TGS \\ 0 & FJ \geq D3*TGS \end{cases} , \qquad (C-1)$$

where FJ is the fraction of the growing season with soil moisture below wilting point (drought days). This relationship is used in subroutine GROW to reduce annual diameter increment and in subroutine BIRTH to reduce seeding in rates from optimal values. Subroutine MOIST computes the number of drought days each year during the simulation.

The identification of each tree-species D3 relies on comparing the tree species range with a map of the number of growing-season drought days (hereafter referred to as "drought map"). This map can theoretically be constructed from climate (rainfall and temperature) data and soil water-holding parameters for the region of interest. It is possible to obtain the rainfall and temperature data on a scale comparable with the ranges of tree species (i.e., county-sized scale). Edaphic properties, however, are not distributed geographically like vegetation; local factors are much more important. For example, Longwell et al. (1963) report that the average water-holding capacity in centimeter per centimeter of a Fullerton soil varies from 0.085 to 0.285, depending on the texture and depth of various horizons. Furthermore, a single soil series rarely occupies >25% -- and

APPENDIX C (CONTINUED)

frequently <<25% -- of the area of a county. Fortunately, most of the tree-species ranges of interest have their western edges located in areas of fairly homogeneous soil texture and depth. We assume a standard soil water-holding capacity that generally reflects that of the eastern edge of the Great Plains.

For upland tree species that have no flooding tolerance, this procedure is adequate. For other species that can tolerate some degree of flooding, this procedure will overestimate their drought tolerance. In dry environments these species will be found where runoff is concentrated: for example, river terraces, floodplains, and river banks. There, soil moisture is determined by topography rather than climate for part of the growing season. We have divided the tree species not restricted to upland sites into four classes based on their flood tolerance (Harms et al. 1980, Kennedy and Krinard 1974, Broadfoot and Williston 1973). Flood-tolerance classes are flooded 0 (bottomland species that have neither flood nor drought tolerance), 8.5, 33.3, and 75% the growing season. For each class we constructed a separate drought map, using climate data (mean monthly rainfall, mean monthly temperature, and variances of monthly temperature and rainfall) for each county in the eastern United States (Olson et al. 1980) and soil properties from representative soils in eastern Oklahoma. Soil properties for the upland species drought map are from a Goldton-Carnasaw-Saul profile in eastern Oklahoma. This silt loam has a mean depth of 74 cm, a field moisture capacity of 0.26 cm/cm, and a

APPENDIX C (CONTINUED)

wilting point of 0.15 cm/cm. Maps for determining D3 for bottomland and flood-tolerant species assumed a very fine, sandy loam in the Severn series located along the Red River. This soil is 152 cm deep and has a field-moisture capacity of 0.29 cm/cm and a wilting point of 0.14 cm/cm. Calculations determining the drought days for each county follow those described under subroutine MOIST in the model description section. The number of dry days for 50 consecutive years was computed using monthly rainfall and temperature selected from a normal distribution with the mean and variance of the appropriate month and variable. The calculations for the flood-tolerant species maps further assumed that evapotranspiration was 0 for the first 8.5, 33.3, and 75% of the growing season, respectively, to account for soil-moisture conditions during the remainder of the growing season.

Maximum drought tolerance D3 for each species is obtained by comparing the appropriate drought map to the species range. The average number of growing season no-growth days occurring in the southwest portion of the species range is selected as D3. Species-range maps of Little (1971,1977) were used.

REFERENCES FOR APPENDIX C

Bassett, J. R. 1964. Tree growth as affected by soil moisture availability. Proc., Soil Science Society 28:436-438.

Broadfoot, W. M., and Williston, H. L. 1973. Flooding effects on southern forests. J. Forestry 71:584-587.

Harms, W. R., H. T. Schreuder, D. D. Hook, C. L. Brown, and F. W. Shropshire. 1980. The effects of flooding on the swamp forest in Lake Ocklawaha, Florida. Ecology 61:1412-1421.

Kennedy, H. E., Jr., and Krinard, R. M. 1974. Mississippi River flood's impact on natural hardwood forests and plantations. U.S. For. Serv. Res. Note (South For. Exp. Stn.) 177, 6 pp.

Little, E. L. 1971. Atlas of United States Trees, Vol. 1. Conifers and important hardwoods. U.S. Forest Service Miscellaneous Publication No. 146.

Little, E. L. 1977. Atlas of United States Trees, Vol. 4. Minor eastern hardwoods. U.S. Forest Service Miscellaneous Publication No. 1342.

Longwell, T. J., W. L. Parks, and M. E. Springer. 1963. Moisture characteristics of Tennessee soils. Bulletin 367, University of Tennessee, Agricultural Experiment Station, Knoxville, TN. 46 pp.

Olson, R. J., C. J. Emerson, and M. K. Nungesser. 1980. Geoecology: A county-level environmental data base for the conterminous United States. ORNL/TM-7354. Oak Ridge National Laboratory, Oak Ridge, TN.

Thornthwaite, C. W., and J. R. Mather. 1957. Instructions and tables for computing potential evapotranspiration and the water balance. Publications in Climatology 10:183-311.

APPENDIX D

MODELING THE EFFECTS OF SOIL NITROGEN ON TREE GROWTH

We have used the equations provided by Aber et al. (1979) based on the fertilizer trials of Mitchell and Chandler (1939) to relate tree growth to soil nitrogen availability. The relationship between foliar percent of nitrogen and relative soil nitrogen availability (AVLMC) for many eastern hardwoods can be described by a Mitscherlich equation:

$$\%N = a[1.0 - 10.0^{-c(b + AVLMC)}] \quad , \qquad (D\text{-}1)$$

where AVLMC is relative nitrogen availability (Aber et al. 1978) calculated as

$$AVLMC = -170. + 4.0\ (AVAILN) \quad , \qquad (D\text{-}2)$$

and AVAILN is nitrogen availability in $kg \bullet ha^{-1} \bullet yr^{-1}$. All other things being equal, relative diameter growth is linearly related to foliar percent of nitrogen as

$$SNGF = d + e(\%N) \quad , \qquad (D\text{-}3)$$

where SNGF is an available soil nitrogen growth factor. Foliar percent of nitrogen is, therefore, assumed to be a physiological index of plant nutrient status.

These parameters can each take on one of three values (Aber et al. 1979), depending on whether a species is tolerant, intolerant, or intermediately tolerant of low nitrogen availability. Species, nitrogen tolerance was classified according to Mitchell and Chandler

APPENDIX D (CONTINUED)

(1939), Aber et al. (1979), and Pastor et al. (1982). Species not covered in these studies were classified according to taxonomic affiliation with a known species or, less desirably, according to relative growth on nutrient-poor sites (Fowells 1965). Only a few, ecologically less important species fell into this latter category.

Aber et al. (1979) scale the soil-nitrogen growth multipliers by setting the multiplier for the intermediate response curve to 1.0 when nitrogen availability equals 170 $kg \bullet ha^{-1} \bullet yr^{-1}$. The growth of these species asymptotes at this value on the Mitchell and Chandler plots. However, when this is done, nitrogen multipliers for intolerant species can exceed 1.0, and those for tolerant species never reach 1.0 since their growth asymptotes at higher or lower nitrogen availabilities, respectively. We, therefore, have chosen to scale the multipliers so that each reaches 1.0 at its saturation nitrogen availability. This is accomplished by dividing d and e of Eq. (D-3) for intolerants by 3.0, that for intermediately tolerant species by 2.4, and that for tolerants by 1.75 immediately after Aber et al.'s original parameters are read in subroutine INPUT.

REFERENCES FOR APPENDIX D

Aber, J. D., D. B. Botkin, and J. M. Melillo. 1979. Predicting the effects of different harvesting regimes on productivity and yield in northern hardwoods. Canadian Journal of Forest Research 9:10-14.

Fowells, H. A. (ed.). 1965. Silvics of Forest Trees of the United States. USDA Forest Service, Agric. Hndbk 271.

Mitchell, H. L., and R. F. Chandler. 1939. The nitrogen nutrition and growth of certain deciduous trees of northeastern United States. Black Rock Forest Bulletin No. 11.

Pastor, J., J. D. Aber, C. A. McClaugherty, and J. M. Melillo. 1982. Geology, soils, and vegetation of Blackhawk Island, Wisconsin. Am. Midl. Nat. 108:266-277.

INTERNAL DISTRIBUTION

1. L. J. Allison
2. S. I. Auerbach
3. V. H. Dale
4. W. R. Emanuel
5. R. H. Gardner
6. M. Huston
7. D. W. Johnson
8. G. M. Lovett
9. R. J. Luxmoore
10. L. K. Mann
11. R. J. Norby
12. R. V. O'Neill
13-22. J. Pastor
23. T.-H. Peng
24-28. W. M. Post
29. D. E. Reichle
30. J. Saldarriaga
31. A. M. Solomon
32. J. R. Trabalka
33. L. D. Voorhees
34. J. A. Watts
35. Central Research Library
36-50. ESD Library
51-52. Laboratory Records Dept.
53. Laboratory Records, ORNL-RC
54. ORNL Y-12 Technical Library
55. ORNL Patent Office

EXTERNAL DISTRIBUTION

56. John Aber, Forestry Dept., University of Wisconsin, Madison, WI 53706
57. Paul W. Adams, Dept. of Forest Engineering, OSU, Corvallis, OR 97331
58. Dave Alban, North Central Forest Experiment Station, Forest Sciences Lab, 1831 Highway 169 E, Grand Rapids, MN 55744
59. H. Lee Allen, School of Forest Resources, Dept. of Forestry, Box 5488, Raleigh, NC 27650
60. Thomas V. Armentanao, Holcomb Research Institute, Butler University, 4600 Sunset Ave., Indianapolis, IN 46208
61. Jerry Baskin, T. H. Morgan School of Biological Sciences, University of Kentucky, 101 Thomas Hunt Morgan Bldg., Lexington, KY 40506
62. Bjorn Berg, Sveriges Lantbruksuniversitet, Swedish University of Agricultural Sciences, Dept. of Ecology and Environmental Research, S-750 07 Uppsala, Sweden
63. Dan Binkley, School of Forestry and Environmental Studies, Duke University, Durham, NC 27706
64. Caroline Bledsoe, Forest Resources AR-10, University of Washington, Seattle, Washington 98195
65. James Bockheim, Dept. of Soil Science, University of Wisconsin, Madison, WI 53706
66. Lindsay Boring, Institute of Ecology, University of Georgia, Athens, GA 30602
67. Dan Botkin, Environmental Studies Program, UC-SB, Goleta, CA 93016
68. Philippe Bourdeau, Head of Environment, Raw Materials and Technology, Commission of the European Communities, Rue de la Loi 200, Wetsroat 200, 1049 Brussels, Belgium

69. Jim Boyle, Dept. of Forest Science, Oregon State University, Corvallis, OR 97331
70. Wallace S. Broecker, Lamont-Doherty Geological Observatory, Columbia University, Palisades, NY 10964
71. Sandra Brown, Department of Forestry, University of Illinois, Mumford Hall, Room 110, 1301 Gregory Drive, Urbana, IL 61801
72. J. Thomas Callahan, Associate Director, Ecosystem Studies Program, Room 336, 1800 G Street, NW, National Science Foundation, Washington, DC 20550
73. C. V. Cole, Natural Resource Ecology Laboratory, Colorado State University, Fort Collins, CO 80523
74. D. C. Coleman, Natural Resource Ecology Laboratory, Colorado State University, Fort Collins, CO 80523
75. W. W. Covington, School of Forestry, North. Arizona University, Box 4098, Flagstaff, AZ 86001
76. Kermit Cromack, Department of Forest Science, Oregon State University, Corvallis, OR 97331
77. Thomas Crow, Northern Hardwood Lab, 806 Wright St., Marquette, MI 49855
78. R. C. Dahlman, Carbon Cycle Program Manager, Carbon Dioxide Research Division, Office of Energy Research, Room J-3111, ER-12, Department of Energy, Washington, DC 20545
79. Paul Detweiler, 3362 N. Dickerson Street, Arlington, VA 22207
80. E. T. Elliott, Natural Resource Ecology Laboratory, Colorado State University, Fort Collins, CO 80523
81. Katherine Ewel, University of Florida, School of Forest Resources and Conservation, Gainesville, FL 32611
82. C. A. Federer, Northeastern Forest Experiment Station, USDA Forest Service, Durham, NH 03824
83. G. J. Foley, Office of Environmental Process and Effects Research, U.S. Environmental Protection Agency, 401 M Street, SW, RD-682, Washington, DC 20460
84. James Fownes, Forestry Dept., 1630 Linden Dr., Madison, WI 53706
85. D. P. Franzmeier, Purdue University, Department of Agronomy, Life Science Building, West Lafayette, IN 47907
86. Jerry Franklin, Forestry Sciences Lab., 3200 Jefferson Way, Corvallis, OR 97331
87. Inez Y.-S. Fung, NASA Goddard Space Flight Center, Institute for Space Studies, 2880 Broadway, New York, NY 10025
88. Richard Gammon, U.S. Department of Commerce National Oceanic and Atmospheric Administration, MS RB3/335, 325 Broadway, Boulder, CO 80303
89. Stanley Gessel, College of Forestry, 115 Anderson Hall, University of Washington, Seattle, WA 98195
90. C. R. Goldman, Professor of Limnology, Director of Tahoe Research Group, Division of Environmental Studies, University of California, Davis, CA 94616
91. E. Gorham, Dept. of Biology and Behavioral Biology, University of Minnesota, Minneapolis, MN 55455
92. J. R. Gosz. Director, Ecosystem Studies Program, 1800 G St., NW, National Science Foundation, Washington, DC 20550
93. Charles C. Grier, College of Forest Resources, AR-10, University of Washington, Seattle, WA 98195

94. David F. Grigal, Dept. of Forest Resources, University of Minnesota, 110 Green Hall, 1530 N. Cleveland Ave., St. Paul, MN 55108
95. P. J. Grubb, University of Cambridge, Botany School, Downing Street, Cambridge CB23EA United Kingdom
96. Charles A. S. Hall, Division of Biological Sciences, Section of Ecology and Systematics, Carson Bldg., Cornell University, Ithaca, NY 14853-0239
97. W. Franklin Harris, Deputy Division Director, Division of Biotic Systems and Resources, National Science Foundation, 1800 G Street, NW, Room 1140, Washington, DC 20550
98. Bill Heal, Inst. of Terrestrial Ecology, Merlewood Research Station, Grange-Over-Sands, Cumbria LA 11 6JU, Great Britain
99. Bruce B. Hicks, Atmospheric Turbulence and Diffusion Division, National Oceanic and Atmospheric Administration, U.S. Department of Commerce, P. O. Box E, Oak Ridge, TN 37831
100. L. R. Holdridge, Tropical Science Center, Apartado 2959, San Jose, Costa Rica
101. Frank F. Hooper, Ecology, Fisheries and Wildlife Program, School of Natural Resources, The University of Michigan, Ann Arbor, MI 48109
102. Richard A. Houghton, The Ecosystems Center, Marine Biological Laboratory, Woods Hole, MA 02543
103. J. W. Huckabee, Project Manager, Environmental Assessment Department, Electric Power Research Institute, 3412 Hillview Avenue, P.O. Box 10412, Palo Alto, CA 94303
104. H. W. Hunt, NREL, Colorado State University, Fort Collins, CO 80523
105. Hans Jenny, Professor Emeritus, Department of Plant and Soil Biology, 108 Hitgard Hall, University of California-Berkeley, Berkeley, CA 94720
106. Carl F. Jordan, Senior Ecologist, The Institute of Ecology, University of Georgia, Athens, GA 30602
107. George Y. Jordy, Director, Office of Program Analysis, Office of Energy Research, ER-30, G-226, U.S. Department of Energy, Washington, DC 20545
108. Charles D. Keeling, Scripps Institution of Oceanography, University of California-San Diego, 2314 Ritter Hall, CA 92093
109. J. P. Kimmins, Faculty of Forestry, University of British Columbia, Vancouver, BC U 6T 1W5
110. F. A. Koomanoff, Carbon Dioxide Research Division, Office of Energy Research, Room J-3111, ER-12, U.S. Department of Energy, Washington, DC 20545
111. Helmut Lieth, Fachbereich Biologie/Chemie, Universität Osnabrück, Postfach 4469, Seminarstrabe 20, D-4500 Osnabrück, Federal Republic of Germany
112. Austin Long, Department of Geosciences, Laboratory of Isotope Geochemistry, University of Arizona, Tucson, AZ 85721
113. Ariel E. Lugo, Center for Energy and Environmental Research, Institute of Tropical Forestry, University of Puerto Rico, P.O. Box AQ, Rio Piedras, Puerto Rico 00928

114. Michael Madigan, Department of Microbiology, Southe ı Illinois University, Carbondale, IL 62901
115. Gregg Marland, Oak Ridge Associated Universities, Institute for Energy Analysis, P.O. Box 117, Oak Ridge, TN 37830
116. Helen McCammon, Director, Ecological Research Division, Office of Health and Environmental Research, Office of Energy Research, MS-E201, ER-75, Room E-233, Department of Energy, Washington, DC 20545
117. Chuck McClaugherty, Dept. of Biology, Clarkson University, Potsdam, NY.
118. Vernon Meentemeyer, Department of Geography, University of Georgia, Athens, GA 30602
119. J. Melillo, Ecosystems Center, Marine Biological Lab, Woods Hole, MA 02543
120. Berrien Moore, Complex Systems Research Center, O'Kane House, University of New Hampshire, Durham, NH 03824
121. C. R. Morely, Natural Resource Ecology Laboratory, Colorado State University, Fort Collins, CO 80523
122. Larry Morris, School of Forest Resources, Dept. of Forestry, Box 5488, Raleigh, NC 27650
123. Robert J. Mulholland, Electrical Engineering and Computer Science, University of Oklahoma, Norman, OK 73019
124. Knute Nadelhoffer, Ecosystems Center, MBL, Woods Hole, MA 02543
125. Hans Oeschger, Physikalisches Institut, Universität Bern, Sidlerstrasse 5, CH-3012 Bern, Switzerland
126. D. S. Orlov, Faculty of Soil Science, Moscow State University, Moscow V-234, 117234 USSR
127. W. Parton, NREL, Colorado State University, Fort Collins, CO 80523
128. Eldor A. Paul, Department of Plant and Soil Biology, University of California-Berkeley, Berkeley, CA 94720
129. Graeme I. Pearman, Commonwealth Scientific and Industrial Research Organization, Division of Atmospheric Physics, P.O. Box 77, Mordialloc, Victoria 3195, Australia
130. Robert K. Peet, Dept. of Biology, UNC-Chapel Hill, Coker Hall 010A, Chapel Hill, NC 27514
131. Ralph M. Perhac, Environmental Assessment Department, Electric Power Research Institute, 3412 Hillview Avenue, P. O. Box 10412, Palo Alto, CA 94303
132. Irwin Remson, Department of Applied Earth Sciences, Stanford University, Stanford, CA 94305
133. Roger R. Revelle, Program in Science Technology and Public Affairs (B-007), University of California-San Diego, La Jolla, CA 92093
134. John F. Richards, Department of History, Duke University, 6727 College Station, Durham, NC 27706
135. C. J. Richardson, School of Forestry & Environmental Studies, Duke University, Durham, NC 27706
136. Daniel Richter, Samuel Trask Dana Bldg., University of Michigan, Ann Arbor, MI 48109-1115

137. Phil Robertson, Dept. of Crop & Soil Science, 101 Soil Science Bldg., Michigan State University, East Lansing, MI 48824.
138. Ralph M. Rotty, Oak Ridge Associated Universities, Institute for Energy Analysis, P.O. Box 117, Oak Ridge, TN 37830
139. Kathy Saterson, Dept. of Biology, Coker Hall 010A, Chapel Hill, NC 27514
140. Dave Schimel, NREL, Colorado State University, Fort Collins, CO 80523
141. William H. Schlesinger, Department of Botany, Duke University, Durham, NC 27706
142. Walt Shields, Crown Zellerbach, Forestry Research Division, Box 368, Wilsonville, OR 97070
143. H. H. Shugart, Department of Environmental Sciences, University of Virginia, Clark Hall, Charlottesville, VA 22903
144. Alan G. Stangenberger, Department of Forestry and Natural Resources, Melford Hall, University of California-Berkeley, Berkeley, CA 94720
145. R. J. Stern, Director, Office of Environmental Compliance, MS PE-25, FORRESTAL, U.S. Department of Energy, 1000 Independence Avenue, SW, Washington, DC 20585
146. Boyd R. Strain, Phytotron, Department of Botany, Duke University, Durham, NC 27706
147. Eric T. Sundquist, U.S. Department of the Interior, U.S. Geological Survey, 431 National Center, MS-421, Reston, VA 22092
148. Paul J. Szaniszlo, Department of Microbiology, University of Texas at Austin, Austin, TX 78712
149. Christopher Uhl, Department of Biology, 202 Buckhout Laboratory, University Park, PA 16802
150. Keith Van Cleve, Forest Soils Dept., O'Neill Bldg., University of Alaska, Fairbanks, AK 99701
151. R. R. Weiler, Ministry of the Environment, Water Resources Branch, Great Lakes Section, 135 St. Clair Avenue West, Toronto, Ontario M4V 1P5 Canada
152. David Weinstein, Ecosystem Research Center, Corson Hall, Cornell University, Ithaca, NY 14853
153. Carol Wells, U.S. Forest Service, Forestry Sciences Lab, Research Triangle Park, NC 27709
154. Peter White, Uplands Field Research Lab, Great Smoky Mountains National Park, Twin Creeks Area, Gatlinburg, TN 37738
155. Raymond G. Wilhour, Chief, Air Pollution Effects Branch, Corvallis Environmental Research Laboratory, U.S. Environmental Protection Agency, 200 SW 35th Street, Corvallis, OR 97330
156. Frank J. Wobber, Ecological Research Division, Office of Health and Environmental Research, Office of Energy Research, MS-E201, Department of Energy, Washington, DC 20545
157. C. S. Wong, Institute of Ocean Sciences, P.O. Box 6000, Sidney, B.C. V8L 4B2 Canada
158. M. Gordon Wolman, The Johns Hopkins University, Department of Geography and Environmental Engineering, Baltimore, MD 21218

159. George M. Woodwell, The Ecosystems Center, Mari ; Biological Laboratory, Woods Hole, MA 02543
160. Paul J. Zinke, Department of Forestry and Natural Resources, Mulford Hall, University of California-Berkeley, Berkeley, CA 94720
161. Office of Assistant Manager for Energy Research and Development, Oak Ridge Operations, P. O. Box E, U.S. Department of Energy, Oak Ridge, TN 37831
162-188. Technical Information Center, Oak Ridge, TN 37831

*U. S. GOVERNMENT PRINTING OFFICE: 1985-544-045/20082