OAK RIDGE NATIONAL LABORATORY LIBRARY

3 4456 0003976 8

ORNL/TM-9859

ornl

OAK RIDGE
NATIONAL
LABORATORY

MARTIN MARIETTA

Mississippi County Community College Solar Power Supply System: Final Summary Report

S. I. Kaplan

OPERATED BY
MARTIN MARIETTA ENERGY SYSTEMS, INC.
FOR THE UNITED STATES
DEPARTMENT OF ENERGY

Printed in the United States of America. Available from
National Technical Information Service
U.S. Department of Commerce
5285 Port Royal Road, Springfield, Virginia 22161
NTIS price codes—Printed Copy: A03 Microfiche: A01

This report was prepared as an account of work sponsored by an agency of the United States Government. Neither the United States Government nor any agency thereof, nor any of their employees, makes any warranty, express or implied, or assumes any legal liability or responsibility for the accuracy, completeness, or usefulness of any information, apparatus, product, or process disclosed, or represents that its use would not infringe privately owned rights. Reference herein to any specific commercial product, process, or service by trade name, trademark, manufacturer, or otherwise does not necessarily constitute or imply its endorsement, recommendation, or favoring by the United States Government or any agency thereof. The views and opinions of authors expressed herein do not necessarily state or reflect those of the United States Government or any agency thereof.

ORNL/TM-9859

Energy Division

MISSISSIPPI COUNTY COMMUNITY COLLEGE SOLAR POWER SUPPLY SYSTEM: FINAL SUMMARY REPORT

S. I. Kaplan

Date Published—February 1986

OAK RIDGE NATIONAL LABORATORY
Oak Ridge, Tennessee 37831
operated by
MARTIN MARIETTA ENERGY SYSTEMS, INC.
for the
U.S. DEPARTMENT OF ENERGY
under Contract DE-AC05-84OR21400

OAK RIDGE NATIONAL LABORATORY LIBRARY
3 4456 0003976 8

Contents

Preface v

Abstract vii

Introduction 1

Photovoltaic/Thermal System 1

Design 1

Reflector and Tracking System 1

Solar Receivers 1

Energy Collection Subsystem 4

System Control and Data Collection 4

Historical Summary 5

Operating Experience 5

Testing and Diagnostics 8

Maintenance 8

Evaluation 9

Observations Concerning Operating Experience 9

Lessons Learned 9

All-Thermal System 10

Objective 10

Conversion Award and Plan 10

Preliminary Operating Experience 11

Performance Information 11

Discussion 15

Conclusions 17

References 19

Bibliography 20

Preface

The Mississippi County Community College (MCCC) solar power system was originally designed and built around a photovoltaic/thermal array. Although large, line-focused mirrors are no longer favored for photovoltaic arrays, the startup and operating experience accumulated at the MCCC Project provided useful examples to guide the Department of Energy's (DOE's) mainstream solar projects that followed it. The significant operational diagnostics and information dissemination effort at MCCC depended in large measure on the enthusiasm and dedication of Dr. Harry V. Smith, formerly president of MCCC, and Mr. Chris Benson, manager of the original solar power system. The successful conversion of the array, under DOE funding, to a more cost-effective, all-thermal configuration, was under the supervision of Dr. John Sullins, currently president of MCCC. Mr. Bill Jackson, now in charge of the solar plant, helpfully provided the author with operating experience data on the new system and with MCCC energy consumption data to allow comparison of photovoltaic/thermal vs all-thermal system performance. Ambient temperature and sky condition data for November and December 1984 and January 1985 were kindly made available by the Base Weather Station at nearby Blytheville Air Force Base.

Abstract

The solar power system at Mississippi County Community College (MCCC) in Blytheville, Arkansas, evolved from an unsolicited proposal to the Department of Energy (DOE) in 1977. A grant was awarded in August of that year, and startup testing of the photovoltaic/thermal array began in May 1981. The system was never able to exceed 55% of rated electrical output, although design winter thermal output was reached successfully. In mid 1984, DOE accepted a proposal to convert the system to an all-thermal one, and this work was completed in October 1984. Limited operation of the all-thermal system was conducted from November 1984 into early February 1985, but further operation was suspended pending the repair of damage incurred during a severe winter storm.

Very preliminary estimates suggest that the total thermal output of the new system exceeds that of the old version, although its collector area is 27% smaller. This report cites numerous lessons learned during photovoltaic/thermal operation that were made available to the Solar Photovoltaic Program for later projects. Recommendations are also made for future all-thermal system operation.

Introduction

The purpose of this report is to describe the overall configuration and to summarize the construction and operating experience of the solar power plant located at Mississippi County Community College (MCCC) in Blytheville, Arkansas. This system originated as an independent proposal to the Department of Energy (DOE) in 1977 and became one of the early major DOE-funded solar power systems. A DOE financial grant was subsequently issued to fund the installation of the solar plant as a source of heat, domestic hot water, and electricity for the new MCCC campus buildings, which were built concurrently. The early prestartup history of the project was summarized in four semiannual reports issued by MCCC.[1-4] Poststartup testing and operating details were reported in ref. 5 and are summarized in this report. More recently, the system was converted to an all-thermal system, which saw limited operation during the winter of 1984–85. Operation is scheduled to be resumed in October 1985.

Photovoltaic/Thermal System

Design

A flowsheet of the photovoltaic/thermal (PV/T) system is shown in Fig. 1. The summary description that follows is extracted from ref. 5.

Reflector and Tracking System

The PV/T array consisted of 45 rows of linear parabolic reflectors (Fig. 2) with their axes oriented north-south. Table 1 lists major construction details. Each row contained six reflectors (Fig. 3) mounted end to end on a common shaft, and each shaft was coupled to a hydraulic drive that allowed the reflector to rotate through an arc of 270 degrees, i.e., from downward-facing (stowed position) through due east (sunrise) to due west (sunset). A photodiode solar sensing device, mounted on each row, provided positioning information to the tracking drive for tracking the westward path of the sun during daylight hours.

Solar Receivers

The PV/T receivers were constructed from hollow aluminum extrusions (Fig. 4), two per reflector, and connected end to end. Two parallel rows of series-connected single-crystal silicon photovoltaic (PV) cells were mounted on each receiver assembly, and all of the

ORNL–DWG 85–13939

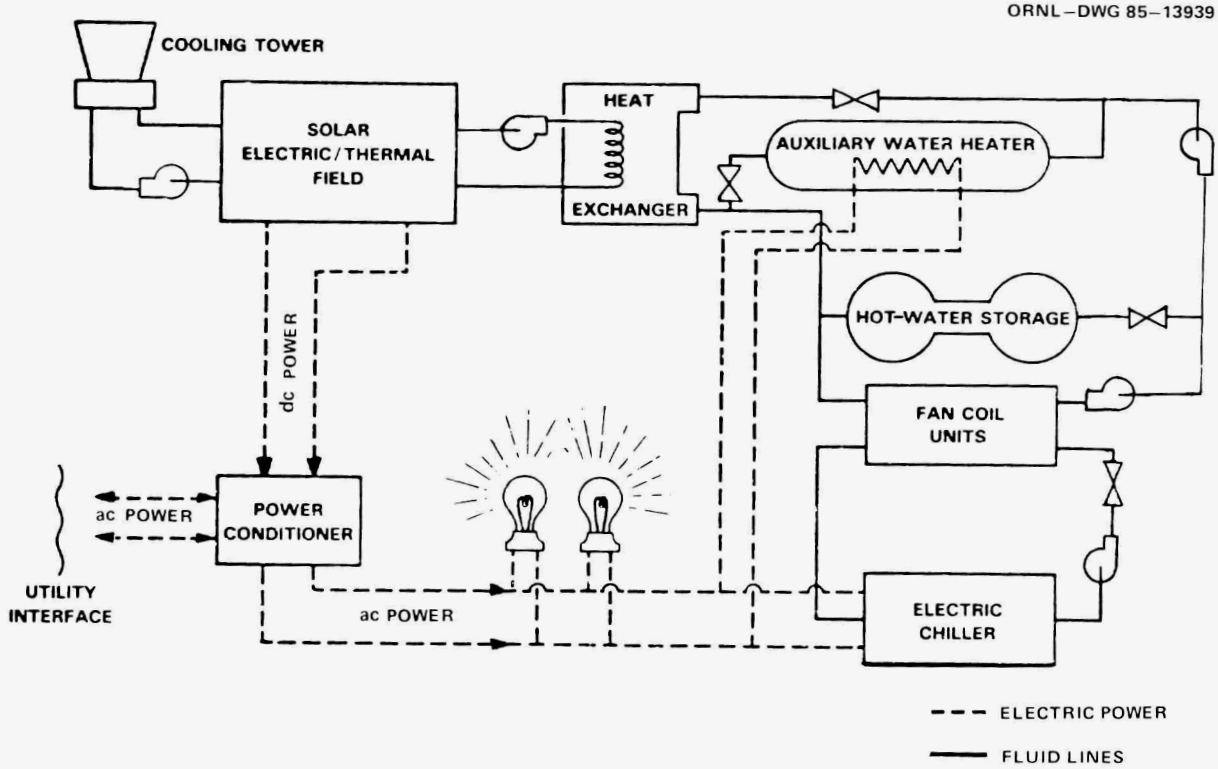

Fig. 1. MCCC solar energy system.

ORNL–PHOTO 1418–83

Fig. 2. Aerial view of MCCC campus and solar array.

Table 1. Mississippi County Community College solar collector construction details

Collector manufacturer	Solar Kinetics, Inc. (Fig. 3)
Type	Parabolic trough, 40x geometric concentration ratio
Tracking	East-west about a horizontal north-south axis
Dimensions	6 m (20 ft) long, 2-m (7-ft) chord, 6.75-m (22.16-ft) focal length
Reflective surface	3-M Company FEK-244 aluminized acrylic film
Receiver	Aluminum extrusion, liquid-cooled, with two series-connected strings of PV cells attached (Fig. 4); assembled by Solarex, Inc.
Cells[a]	Single-crystal silicon, 2.76 by 4.95 cm, manufactured by Solarex, Inc.
Cells per receiver	56 to 61, depending on location of receiver in six-collector row
Receivers per collector	2, mounted end to end
Bypass diodes	12 per receiver, bridging from 2 to 10 cells each; 10-cell groups are in the center of the receiver, decreasing to 2 cells per diode at ends

[a]The cells are cemented to the aluminum extrusion with a room-temperature-vulcanizing (RTV) silicone rubber compound that contains aluminum oxide powder to improve heat conductivity. Clear RTV silicone rubber is used as an optical coupler between the cells and a 0.051-cm-thick (0.020-in.) glass cover plate.

ORNL–PHOTO 5629–85

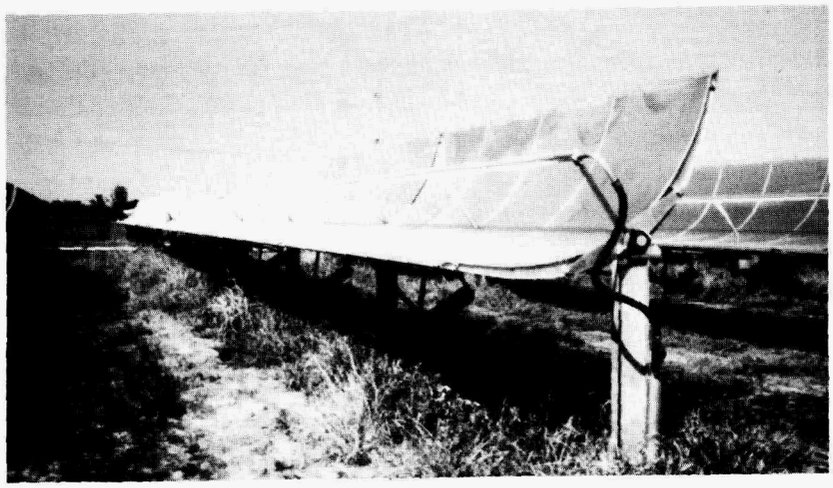

Fig. 3. MCCC solar collector row.

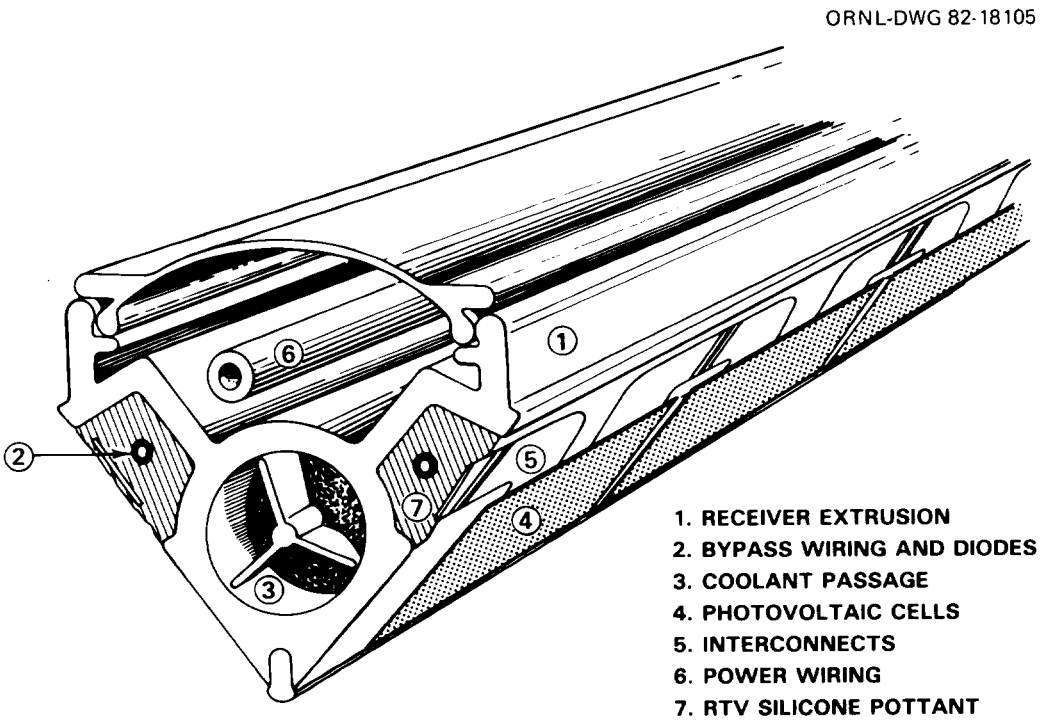

Fig. 4. Cutaway view of MCCC photovoltaic receiver.

receivers in each row were electrically joined to form two series-connected cell strings, together rated to deliver 14.4 A at 370 V under MCCC design conditions (Table 2). Current from the strings was fed to a common collector bus at the end of each row.

Each receiver was cooled by a forced flow of ethylene glycol-water solution. This flow was designed to be variable, to maximize cooling of the cells in summer and production of heated water [55°C (131°F)] in winter.

Energy Collection Subsystem

The dc electrical output from the individual rows was fed to four collector buses at the end of the rows. These, in turn, were connected to a Helionetics, self-commutated, 300-kW inverter to provide 3-phase, 440-V ac power to the school and/or the utility grid. An agreement was negotiated with the Arkansas-Missouri Power Company, serving the Blytheville area, to buy surplus power from the array at the same rate paid by MCCC for power purchases.

Heated coolant from the PV receivers was similarly collected and piped either to a heat exchanger in the campus hot-water space-heating system or to an outdoor cooling tower, depending on whether building heat was required (Fig. 1).

System Control and Data Collection

The array itself was controlled through a Hewlett-Packard 9845 computer. This unit started the system when adequate insolation was present and performed appropriate action

when emergency conditions existed. When PV elements were installed, it also monitored electrical output for individual rows, key system temperatures, weather data, etc., and provided hourly printouts.

A government-furnished Onsite Data Acquisition System, also based on a Hewlett-Packard 9845 computer, was installed to collect and transmit a separate set of data, which was permanently stored in the DOE Solar Energy Information Data Bank and analyzed to compare MCCC array performance with other DOE-sponsored solar PV installations.

Table 2. MCCC solar power supply design conditions

Date	Reference year[a]	Insolation (W/m^2)	Ambient temperature [°C (°F)]	Power output, thermal [10^6 kJ/d (10^6 Btu/d)] or electrical (kW dc)
January 21	1960	900	15 (59)	12.5 (11.5), thermal
August 21	1960	845	30 (86)	240, electrical

[a]The year chosen as most representative of "average" weather.

Historical Summary

Following the issuance of the grant in August 1977, system design was begun. When the design for the building was submitted to DOE for evaluation, the adequacy of the building heat load calculations was questioned. A recheck by the Project using the Corps of Engineers computer code BLAST and by an Oak Ridge National Laboratory (ORNL) subcontractor using CAL-ERDA (later known as DOE-2) confirmed the architect's predictions, and the design and bidding were allowed to proceed. Because of the 5-month delay engendered by the design review and the consequent impact on construction costs due to inflation, in February 1979 MCCC requested a 5-month time extension and $500,000 in additional funds. These changes were subsequently approved.

Table 3 presents a chronology of the major events related to the solar power system through October 1985. Highlights of poststartup testing and operating experience are presented below. Further detail covering the period up to November 1981 may be found in refs. 5 and 6.

Operating Experience

The first PV receivers were delivered to the site in August 1980. However, because of production delays and the need to replace units showing electrical insulation breakdown and arcing, a full set of receivers was not available until May 1981. During startup and operation over the next 2 years, the electrical output of the system was never observed to exceed 55% of design rating. A substantial portion of operating time was consumed by diagnostic testing and adjustments in an effort to raise the system output to design levels.

Table 3. MCCC solar power system chronology

September 1976	Original proposal for solar power system submitted to ERDA[a] by MCCC
March 1977	Revised proposal submitted to ERDA
August 1977	DOE grant for $6.3 million awarded to MCCC to build a PV/T system and couple it to the new campus facilities being built at the same time
August 1980	First solar receivers shipped to site
May 1981	Solar array erection completed; startup testing began
September 1981	Initial operation began
November 1981	Interim evaluation of system conducted by ORNL
July 1983	First MCCC proposal submitted to retrofit field to all-thermal one
June 1984	Final MCCC proposal to retrofit system submitted to and accepted by DOE
July 1984	All PV receivers removed from concentrator troughs
October 1984	All-thermal system became operational
January 1985	Array damaged by extreme winter conditions; shut down pending repairs
October 1985	Anticipated restart for heating operations

[a]Energy Research Development Administration.

The large reflectors [2.1-m chord × 6.1-m length (7 × 20 ft)] were sensitive to torsional stress, which caused distortion of the reflective surface and degraded focusing accuracy. The reflectors were counterweighted with concrete weights mounted on cantilevered supports to minimize excess tracking force requirements (Fig. 3). Although the total moment furnished by the counterweights was adequate, the distribution of the weights along the row axis did not provide sufficient counterbalancing at the ends of the rows, allowing these to sag. Thus, the middle of the row, where the positioning arm was mounted, could be well focused while the solar image at the ends of the row could drift off the face of the cell string in some cases. Over the 36.6-m (120-ft) length of the row, an axial twist of no more than 0.7 degrees from center to either end could be tolerated without loss of illumination to some cells, assuming an otherwise perfect receiver. Thermal expansion effects caused by differential heating of front and back surfaces, as well as changes in row alignment caused by shifting of support piers in the relatively soft Mississippi Basin topsoil, were also observed. Focusing errors due to mirror surface deviations were observed to affect not only the lateral orientation of the solar image but also the focal length of the mirrors. The effect of focusing errors was particularly acute for the PV/T system because the width of the PV cells (2.76 cm) would accommodate only a small image drift without loss of illumination.

The importance of a second, less obvious problem was revealed upon determination of voltage-current characteristic curves (I-V curves) for several rows by personnel from the Jet Propulsion Laboratory (JPL).[7] Nonuniform illumination of the receivers was causing differences in power output from various cells in the series-connected strings mounted on the receivers. This, in turn, caused some of the low-illuminated cells to be reverse biased by the higher voltage from more brightly illuminated cells in the series circuit; local overheating, current bypassing through the bypass diodes built into the receiver, and consequent loss of power were the results. Similar phenomena were reported by Sandia National Laboratory, Albuquerque (SNLA), during tests of a collector/receiver assembly closely resembling the MCCC modules.[8]

Focusing errors, as described above, contributed to the inability of the array to reach design electrical output; two other phenomena were also partly responsible: (1) solar tracking error, and (2) shadowing of the receivers. Solar tracking errors related mainly to slippage in the positioning mount of individual sun position sensors mounted on the rows of collectors. Phenomena such as tracker drive chatter resulting from leaky hydraulic valves or thermal cycling from diurnal temperature changes caused the alignment of the sensor heads to shift, altering their pointing attitude with respect to the solar disk.

In addition to variations in receiver illumination due to mirror distortion, other zones of low illumination occurred from shadows cast on the cells from nonreflective bands where joints in the FEK-244 reflective surface occurred and from nonilluminated parts of receivers where gaps between adjacent reflectors provided no path for directing sunlight to active areas on the receivers. The effect of shadowing on row output paralleled that of lost illumination due to focusing error: (1) the under-illuminated cells generated very little current, decreasing row power output; (2) the high electrical resistance of back-biased cells caused built-in bypass diodes to function, bridging clusters of nonproducing cells. The cluster sizes were predetermined by the receiver wiring design; consequently, even if part of the cells in a shadowed cluster were functional, they would be unavailable to contribute to row output power. In a two-axis tracking array, where the sun direction line is always perpendicular to the receivers, this condition would be avoided. It will always exist to some extent, however, when all the solar cells do not remain totally illuminated throughout the year, as in a single-axis tracking array.

Because of the rural/agricultural location of the array, certain unusual conditions occurred that soiled the reflectors during specific seasons of the year, including burnoff of field stubble in the fall prior to winter planting and periodical raising of dust clouds by soil cultivation during the growing seasons (two to three per year). Although occasional soil deposits appeared particularly persistent, most were substantially removed by high-pressure washing with detergent solution. Wiping with soft cloths temporarily improved reflectivity by as much as 5% over washing alone, following extreme soiling conditions, but this caused light scratching of the mirrors. The efficiency gain measured on individual row performance after this type of cleaning occasionally ranged as high as 15%, but overall array outputs generally showed 5–10% maximum improvement after washing.

The importance of ready, all-season access to the array elements was borne out during the erection period at MCCC. Slowdowns and postponements, largely attributable to the muddy conditions resulting from flat, poorly drained terrain and thick deposits of soft

alluvial topsoil, delayed initial startup by several months and repeatedly interfered with tests, cleaning, and repair schedules until adequate drainage and graveled access paths were provided for the spaces between rows.

The production of thermal energy output from the plant was generally much less subject to optical inefficiencies than was the case with electrical production. While the PV/T receivers were relatively inefficient heat producers, they were more tolerant of focusing inaccuracies and shadowing, as far as heat production was concerned, than for electrical production. Thermal receivers are not subject to generation upsets akin to back biasing of cells, in areas where the illumination is interrupted; the absorbed energy is transported along the dark sections by the liquid flow without special gap-induced loss mechanisms. Also, radiation striking the receiver outside the cell line is equally as effective at heating the fluid as that shining on the cells. The operators reported that on sunny days with the outside air temperature at approximately 4.4°C (40°F), the array would maintain the building interiors within the normal occupancy range [i.e., above 20°C (68°F)] without electrical augmentation. Production of winter heat at system winter design conditions was verified (Table 2).

Testing and Diagnostics

Several means were employed to test and evaluate array behavior at MCCC, including the following.

1. "Before and after" cell string current measurements, in connection with refocusing, readjustment of tracking head sensitivity and alignment, manual row twisting to simulate counterweighting, and masking of portions of reflectors to simulate shadowing effects by gaps.

2. Infrared scans of receivers, to identify differing cell temperatures along a receiver string. These measurements were valuable in identifying cracked or shorted cells as well as back-biased cells. When the illuminated receiver circuit was disconnected and cell behavior was observed, shorted cells could be distinguished from those overheating due to poor thermal bonding to the receiver.

3. Current vs voltage characteristic determinations (I-V curves) for individual rows.

Facilities and test personnel from JPL, SNLA, and ORNL were employed for testing and diagnostics, as well as those from MCCC. No single testing technique was versatile enough to provide complete diagnosis of the various possible problems, but the later versions of rugged, truly portable I-V testing equipment developed at JPL provided quick and effective identification of most electrical behavior problems.

Maintenance

During the 2-year operating span from November 1981 to November 1983, two types of equipment problems accounted for a major part of the system maintenance activities: (1) electrical insulation breakdown between the cell string connectors and the aluminum receiver extrusion and (2) tracking drive system component failures. Until the summer of 1981, the incidence of electrical faults in receivers averaged approximately one per week;[9]

the rate then declined to one to three per month between August 1981 and March 1982. Subsequently, a roughly cyclic failure rate emerged, peaking in midsummer and generally minimizing during the cooler months. The average failure rate was 4 per month, with a range of 0 to 12. Initially, damaged receivers were sent to Solarex, Inc., for repair; but in 1982, college assistants were sent to the factory for instruction in repair techniques, and thereafter the damaged units were repaired on site.

Each of the 45 collector rows had its own hydraulically actuated tracking drive system, which responded to signals from the row's solar position detector (tracker head). The tracking drive system failures generally involved hydraulic system components or hydraulic pump motors. The major apparent causes can be described as follows. Leakage occurred from four-way hydraulic distribution valves, which caused the system pressure to bleed down and activate the hydraulic pump. As leakage increased, the cycling rate increased from valve wear; mechanical play developed in shaft couplings and drive linkages, culminating in mechanical part failure or electrical damage to the motor circuit. Repairs were initially made by Solar Kinetics, Inc., the supplier; but after initial warranty expiration, these repairs were performed on site, using parts obtained from Solar Kinetics. Between April 1982 and July 1983, system incident reports listed 21 drive shutdowns that required replacement of shaft couplings, motors, four-way valves, or other components.

Evaluation

Observations Concerning Operating Experience

Although the MCCC array was unable to reach its intended electrical output, the results appear to demonstrate that inherent problems in this early concentrating PV design were the principal reason, rather than any operating or maintenance shortcomings. This conclusion is supported by experience with closely similar, although somewhat more refined, equipment at two other installations. The tests of the BDM PRDA-35 module at SNLA[8] indicated that (1) a tracking accuracy of better than 0.1 degree was necessary for that design to preclude loss of power generation because of radiation missing the target and (2) inherent limitations in the accuracy of the reflector curvature caused unpredictable variations in target illumination. The BDM Company also reported in 1984, after extended testing of its PV/T array, that the major factors in its inability to reach design power (72% maximum) were receiver tube alignment problems and focusing inaccuracies.[10]

Electrical breakdown of PV/T receivers exposed to ambient weather conditions was also observed in the Acurex PV/T array.[8] In fact, the only current linear-focused PV/T design that shows sustained high efficiency and freedom from breakdown is the Entech (formerly E-Systems) concept,[7] which encloses the receiver beneath a curved Fresnel concentrating lens and which can tilt the collector modules about two axes so that solar incidence is kept perpendicular to the cells throughout the year.

Lessons Learned

1. Although horizontal single-axis tracking concentrators are satisfactory for thermal service, they are prone to target-shadowing problems that are unacceptable for PV service.

2. Large-aperture reflecting linear concentrators are not attractive for PV service because of inherent limitations in dimensional stability that affect focusing accuracy.
3. Small differences in illumination of series-connected PV cells (e.g., due to thin shadows across the cells) can cause back biasing of the less illuminated cells with consequent loss of output by the entire circuit.
4. Where a large array of sun-tracking PV modules is deployed, ganged tracking controlled from a single solar position sensor will eliminate many individual sensor adjustments.
5. When multiple solar cells are connected in a series in a single concentrating module, individual cells or small groups of cells should be easily replaceable.
6. Solar PV tracking drive components need careful selection for weather tightness and long-term durability.
7. Adequate diagnostic instrumentation is now readily available to analyze PV module performance.

All-Thermal System

Following the startup of the PV/T system at MCCC, DOE contracted with the school to continue operating the system, recording data, and maintaining its efforts to improve performance and attain design-level operating conditions. This support was maintained through September 1983, including the operation of the Onsite Data Acquisition System for collecting archive data. At that time, the remaining useful life of the concentrators for thermal energy production was estimated to be 10 years; however, because of accelerating deterioration of the PV/T receivers, the electrical output of the array was falling off steadily, and it was concluded that useful production of electricity could probably be maintained for only 1 to 2 more years. On this basis, DOE and MCCC examined a series of design options for a conversion package that would leave the college with a useful energy source.

Objective

The objective of converting the MCCC solar array to an all-thermal system was to provide the college with a simple, reliable, and useful supplemental energy source that would significantly reduce its dependence on electricity for winter space heating. At the same time, the conversion would permit the continued operation of an existing facility in a constructive fashion.

Conversion Award and Plan

In June 1984, after several months of negotiation, MCCC submitted a conversion proposal that DOE accepted and funded at $225,000. The proposal provided for conversion of 33 of the

original 45 collector rows from PV/T to all-thermal service. Solar Kinetics, Inc., the original supplier of the equipment, would supply and install thermal receivers, together with necessary flexible hoses and other conversion plumbing. The remaining 12 rows would be left in place as installed spare equipment, with the PV/T receivers removed and the coolant lines disconnected from the new hot-water supply system. The hydraulic tracking drives for the active rows were to be refurbished, and the existing four-way flow-control valves would be replaced with new units of proven trouble-free design. The dc/ac inverter would be disconnected from the college power supply system, and a central tracking controller would be provided to minimize the amount of individual row tuning required. Evaluations of the design of the proposed array were made by both Solar Kinetics and ETEC, Inc., a DOE contractor; the array was judged to be capable of providing the minimum heating requirement for the college during most average winter conditions [i.e., sufficient heat could be generated during winter design conditions to maintain the college buildings above 20°C (68°F) and provide adequate stored hot water (during a clear week) to carry the buildings for a subsequent three-day cloudy period.

Conversion of the system was begun in July 1984, and the modified system became operational in October 1984. The Helionetics 300-kW dc/ac converter was reconditioned by the manufacturer, at the direction of the Arkansas State Property Disposal Office, and was subsequently sold to the Arizona Power and Light Company to replace a damaged unit at a solar installation in Phoenix.

Preliminary Operating Experience

Meaningful data for the revised system are extremely limited because of adverse weather conditions during the winter of 1984-85 and because recording of all weather and operational data at MCCC was discontinued when DOE funds for operating the PV/T system were exhausted in the summer of 1984. Therefore, no rigorous evaluation of system performance is currently possible. The new all-thermal system was available for operation during November-December 1984 and January 1985. Blizzard conditions and sub-zero weather on January 19 and 20 immobilized several collectors; when the tracking drives were later actuated, 11 rows were found to be out of service for either electrical or mechanical damage and one reflector was structurally damaged. After a preliminary damage survey, operation was resumed for a few days with the 21 rows remaining. Further operation of the system was suspended in early February to preclude further damage before a thorough inspection could be made. Resumption of operations, including limited data collection, is planned for October 1985.

Performance Information

In interviews with the system operator, several items of isolated information were secured that provide a rough indication of the system's capability. These are presented in Table 4. Additionally, overall campus electrical consumption and heating degree-day data were collected for MCCC for the months of November and December 1984 and for January 1985 (Figs. 5-7). The only measurement of purchased energy by the college is the record of

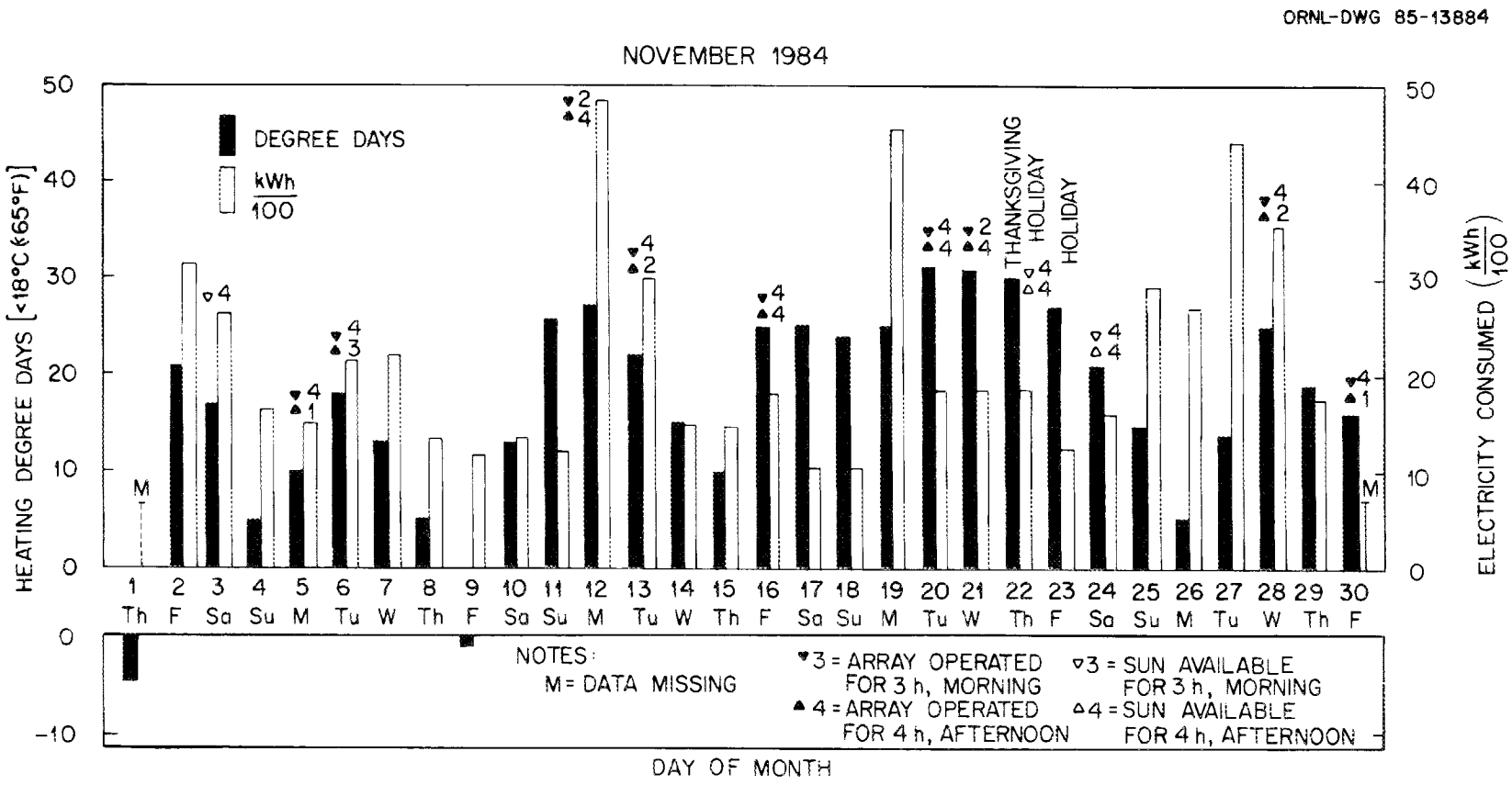

Fig. 5. MCCC weather, electrical consumption, and solar array operation for November 1984.

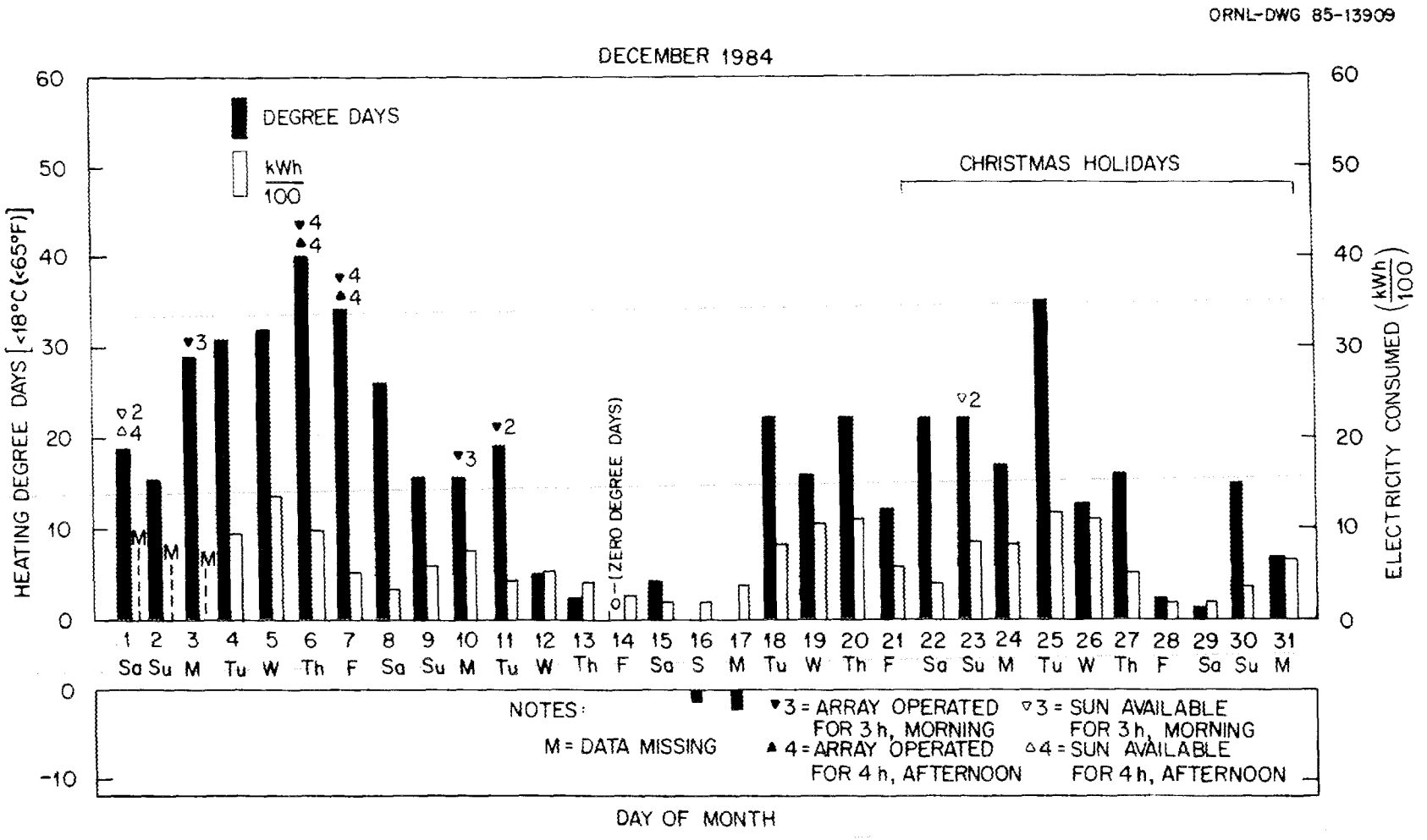

Fig. 6. MCCC weather, electrical consumption, and solar array operation for December 1984.

ORNL-DWG 85-13910

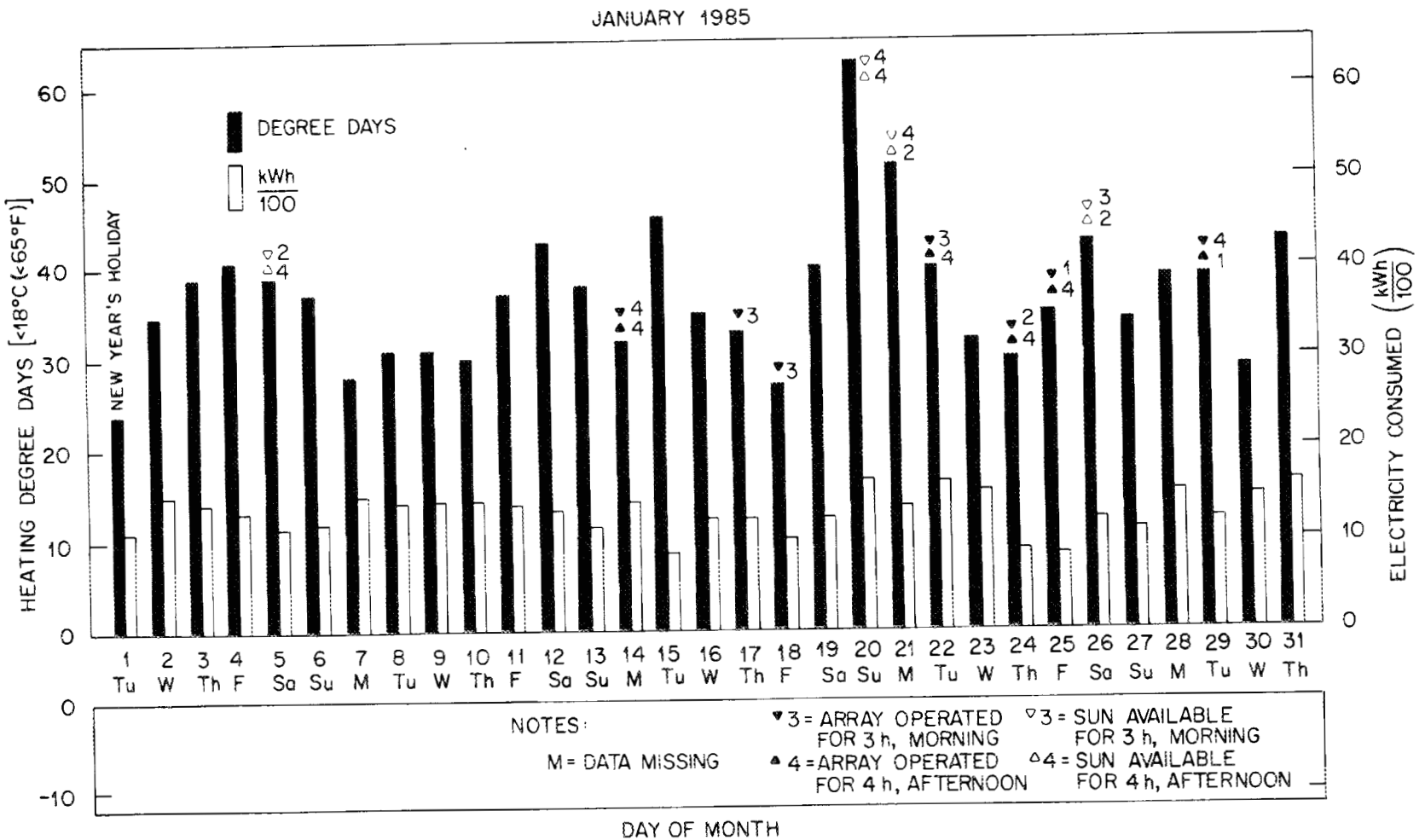

Fig. 7. MCCC weather, electrical consumption, and solar array operation for January 1985.

total electricity consumption provided by the Arkansas Power and Light Company's meters at the site. The degree-day data were computed from weather observations at nearby Blytheville Air Force Base (4.5 miles northwest), in the absence of recorded information at MCCC during the period. Days during which the system operated are shown on the plots.

Discussion

The extent of solar array operation during the winter months, particularly during December 1984 and January 1985, was extremely limited because of heavy cloud cover and the current schedule of manning the equipment on school days only. This makes any inferences about the impact of system operation on building electric load highly speculative: although all nonsolar heat for the college is supplied by a 250-kW electric water heater, some component of lighting and other nonheating power is included in the load data. In general, this component appears to be between 200 and 500 kWh daily. Additionally, variables such as cloud cover and wind velocity affect the heat load to an undetermined extent. The heat load is also strongly influenced by the temperature programming schedule for the buildings. During the winter months, the classroom and office space is heated only to 13°C (55°F) on nights, weekends, and holidays. This program results in a characteristic jump in electricity consumption on Mondays, when classes resume and the temperature is raised to 20°C (68°F). Some effect of solar operation may thus be evident on Monday, November 5, 1984, when (1) the array operated all morning, (2) the number of degree-days increased from Sunday, but (3) the overall electric energy consumption decreased instead of increasing from the previous day. The following week, however, when the degree-days were approximately tripled, a Monday afternoon operating period did not prevent a large electric load, although the morning operation on the next day may have helped to cut the Tuesday total.

Comparable instances may be found on the charts for December 1984 and January 1985 (Figs. 6 and 7); however, the correlation between solar operation and mitigated electricity consumption is not a simple one and obviously depends on other variables for which no data are available. It is instructive to check the operator's observations shown in Table 4, however, even while recognizing their inexactness. Overcast weekdays (Tuesday through Friday) with outdoor daytime temperatures of 4 to 7°C (40 to 45°F) were selected for the "40 to 45°F" category, and −7 to −4°C (20 to 25°F) for the "20 to 25°F" categories. For the damaged-row case, January 28 and 31 were used, when daytime temperatures were −7 to −2°C (20 to 28°F) and skies were overcast. The average electricity consumption was computed, and 400 kWh (estimated daytime nonheating load) was subtracted from it. To estimate the heat load of the buildings, the electricity consumption was observed for overcast weekdays having the daytime temperature range of interest. Because of the typical Monday morning jump in load, only Tuesdays through Fridays were used. The mean electric load was found for several representative days in the −7 to −4°C (20 to 25°F) and 4 to 7°C (40 to 45°F) ranges, and a correction of 400 kWh was subtracted to account for nonheating loads. The remainder was regarded as the daily heating load. The thermal storage tank capacity is 302.8 m^3 (80,000 gal) or 3×10^5 kg of water. Combining the apparent thermal

load of the building and the heat required to raise the tank temperature thus provides an estimate of the array output. The results are shown in Table 5 and yield numbers that are at least compatible with the array expectations for the conditions chosen.

Table 4. Operator's estimates of MCCC solar array performance[a]

	Month and year		
	October 1983	November 1984	End of January 1985
Array size, rows	45	33	21
Array type	PV/T	Thermal only	Thermal only
Estimated outdoor temp., °C (°F)	4 to 7 (40 to 45)	−7 to −4 (20 to 25)	−7 to −4 (20 to 25)
Typical storage tank temp. reached, °C (°F)	46 (115)[b]	52 (125)[b]	All heat went to buildings
Simultaneous storage tank heating rate, °C (°F) per day	−18 to −14 (0 to 7)[c]	−9 (15)	
Maximum row exit temp. observed, °C (°F)	57 (135)	82 (180)	

[a] Outdoor conditions: sunny day, array operating approximately 8 h. Indoor conditions: classroom and office space maintained at 20°C (68°F) or above without supplementary electric heat.

[b] Temperature after 2 to 3 days if no heat is needed for buildings.

[c] Very sensitive to wind velocity.

Table 5. Apparent MCCC array output capability, based on operator's observations

Array type	Rows	Outdoor temp. [°C (°F)]	Heat to storage tank (10^6 Btu/d)	Heat to building, (10^6 Btu/d)	Total useful heat, (10^6 Btu/d)
PV/T	45	4 to 7 (40 to 45)	4.5	2	6.5
Thermal only	33	−7 to −4 (20 to 25)	10	3.4	13.4
Thermal only	21	−7 to −4 (20 to 25)	0	3.4	3.4

Conclusions

1. No firmly supportable evidence is yet available to show the extended performance capability of the system.
2. The limited information available tends to show that the thermal output of the new system is improved over that of the former PV/T system, both in terms of energy storage capacity and of heating effectiveness at low ambient temperatures.
3. The utilization of the system is significantly degraded by the school-days-only operating schedule. Manning the equipment during sunny nonschool days could build up valuable heat storage to cover operating days.
4. If MCCC is enlarged in the future to the stage where additional summer cooling capacity is required, the School Board should consider adding an absorption chiller to utilize the summer heating capability of the array.
5. If recording of operating data is resumed as planned starting with the winter of 1985-86, a good basis for measuring the cost effectiveness of the system should be available. In addition to the value of such information to the solar community, the College could benefit from knowing the worth of the system as an energy saver.

References

1. H. V. Smith, *Total Energy Solar Photovoltaic Conversion System for Mississippi County Community College: Six Months Technical Progress Report for Period August 16, 1977–February 28, 1978,* OR-5565-78-1, Mississippi County Community College, Blytheville, Arkansas, March 31, 1978.

2. H. V. Smith, *Total Energy Solar Photovoltaic Conversion System for Mississippi County Community College: Six Months Technical Progress Report for Period February 28, 1978–August 31, 1978,* OR-5565-78-2, Mississippi County Community College, Blytheville, Arkansas, Sept. 30, 1978.

3. H. V. Smith, *Total Energy Solar Photovoltaic Conversion System for Mississippi County Community College: Six Months Technical Progress Report for Period August 31, 1978–February 28, 1979,* OR-5565-79-1, Mississippi County Community College, Blytheville, Arkansas, March 31, 1979.

4. H. V. Smith, *Total Energy Solar Photovoltaic Conversion System for Mississippi County Community College: Six Months Technical Progress Report for Period February 28, 1979–August 31, 1979,* OR-5565-79-2, Mississippi County Community College, Blytheville, Arkansas, Oct. 31, 1979.

5. S. I. Kaplan, *Evaluation of Mississippi County Community College and Northwest Mississippi Junior College Solar Power Systems,* ORNL/TM-8396, Oak Ridge National Laboratory, December 1982.

6. S. I. Kaplan, "Experience from DOE Photovoltaic Grant Projects," pp. 1189–1192, *Proceedings of the 1981 Annual Meeting, American Section, International Solar Energy Society, May 26–30, 1981, Philadelphia, Pennsylvania,* American Section of International Solar Energy Society, 1981.

7. R. W. Weaver, R. H. Lee, et al., *FSA Field Test Annual Report, August 1981–January 1984,* DOE/JPL-1012-100, Jet Propulsion Laboratory, Pasadena, California, Aug. 15, 1984, p. 5-1.

8. T. D. Harrison, *Results of the PRDA 35 Qualification Tests on the BDM Concentrating Photovoltaic Module,* SAND 82-0732, Sandia National Laboratory, Albuquerque, New Mexico, August 1982.

9. S. I. Kaplan, *Startup Experience with a Concentrating Photovoltaic Power System*, Paper AIAA-82-0068, presented at the Twentieth Aerospace Sciences Meeting, American Inst. Aer. Astron., Jan. 11-14, 1982, Orlando, Florida.

10. BDM Corporation, *Commercial Application of a Photovoltaic Concentrator System: Lessons Learned*, BDM/A-84-318-TR, Albuquerque, New Mexico, Oct. 16, 1984, p. IV-9.

Bibliography

1. S. I. Kaplan and C. M. Benson, "Experience with a Grid-Interactive Solar PV Electric System," *Proceedings of the Fifteenth IEEE Photovoltaic Specialists Conference, May 11-15, 1981, Orlando, Florida*, Institute of Electrical and Electronics Engineers, Inc., 1981.

2. H. Macomber, D. Faehn, S. Kaplan, et al., "PV Applications: Past, Present and Future," pp. 1007-1017, *Proceedings of the Fourteenth IEEE Photovoltaic Specialists Conference, Jan. 7-10, 1980, San Diego, Calif.*, Institute of Electrical and Electronics Engineers, Inc., 1980.

3. G. Pollock and M. Pollock, "Pioneering With Solar Power," *Community Coll. Jun. Coll. J.* 52(8), 26-28 (May 1982).

4. "PV One," *Prog. Archit.*, 134-137 (April 1982).

5. W. Schwinkendorf, BDM Corporation, *Analysis of Concentrating PV/T Systems for the Commercial/Industrial Sector*, SAND 82-7157/2, Sandia National Laboratory, Albuquerque, New Mexico, September 1984.

INTERNAL DISTRIBUTION

1. V. D. Baxter
2. R. S. Carlsmith
3. J. E. Christian
4. F. G. Farrell
5. B. J. Frame
6. W. Fulkerson
7. L. D. Gilliam
8. E. L. Hillsman
9. M. T. Huie
10. M. R. Ives
11. S. I. Kaplan
12. J. O. Kolb
13. R. S. Loffman
14. J. F. Martin
15. L. N. McCold
16. S. H. McConathy
17. J. W. Michel
18. R. W. Murphy
19. M. O. Pace
20. A. M. Perry
21. C. H. Petrich
22. H. B. Shapira
23. R. A. Stevens
24. J. P. Stovall
25. J. W. Van Dyke
26. C. D. West

27–28. Central Research Library

29. Document Reference Section
30. Laboratory Records—RC

31–32. Laboratory Records

33. ORNL Patent Section

EXTERNAL DISTRIBUTION

34. J. G. Carbonell, Associate Professor of Computer Science, Carnegie-Mellon University, Pittsburgh, PA 15213
35. H. S. Coleman, CE-331, Director of Solar Thermal Technology, U.S. Department of Energy, Washington, DC 20585
36. P. D. Fairchild, Electric Power Research Institute, 3412 Hillview Avenue, P.O. Box 10412, Palo Alto, CA 94303
37. Dr. S. M. Gillis, Professor, Public Policy and Economics, Duke University, 4875 Duke Station, Durham, NC 27706
38. Dr. F. R. Kalhammer, Vice President, Electric Power Research Institute, P.O. Box 10412, Palo Alto, CA 94303
39. Dr. R. E. Kasperson, Professor of Government and Geography, Graduate School of Geography, Clark University, Worcester, MA 01610
40. Dr. M. Lessen, Consulting Engineer, 12 Country Club Drive, Rochester, NY 14618
41. Dr. F. C. Maienschein, Director, Engineering Physics and Mathematics Division, Oak Ridge National Laboratory, Building 6025, P.O. Box X, Oak Ridge, TN 37831

42–44. V. N. Rice, CE-352, Photovoltaics Technology Division, U.S. Department of Energy, Washington, DC 20585

45. H. V. Smith, Chancellor, Illinois Eastern Community Colleges, 233 East Chestnut Street, Olney, IL 62450-2298

46. J. P. Sullins, President, Mississippi County Community College, Blytheville, AR 72315

47–67. Energy Conservation Distribution, Oak Ridge National Laboratory, Building 9102-2, Room 103, Oak Ridge, TN 37831

68. Office of the Assistant Manager for Energy R&D, U.S. Department of Energy, Oak Ridge Operations, Oak Ridge, TN 37831

69–95. Technical Information Center, Oak Ridge, TN 37831